US Army Corps
of Engineers
Louisville District

Solicitation for

CONSOLIDATED MAINTENANCE FACILITY
NIAGARA FALLS, NEW YORK

MAY 10, 1999

SFB DACA27-99-B-0018

PROJECT TABLE OF CONTENTS

DIVISION 00 - SPECIAL CONTRACT REQUIREMENTS

00700 CONTRACT CLAUSES
00800 SPECIAL CONTRACT REQUIREMENTS

DIVISION 01 - GENERAL REQUIREMENTS

01080 SOURCES FOR METRIC PRODUCTS
01090 SOURCES FOR REFERENCE PUBLICATIONS
01200 CONTRACTOR WARRANTY MANAGEMENT
01330 SUBMITTAL PROCEDURES
01356 STORM WATER POLLUTION PREVENTION MEASURES
01410 ENVIRONMENT PROTECTION
01451 CONTRACTOR QUALITY CONTROL
01452 TESTING FOR MECHANICAL AND ELECTRICAL SYSTEMS
01500 TEMPORARY CONSTRUCTION FACILITIES

DIVISION 02 - SITE WORK

02050 DEMOLITION
02080 ASBESTOS ABATEMENT
02090 REMOVAL AND DISPOSAL OF LEAD CONTAINING PAINTED MATERIALS
02120 TRANSPORTATION AND DISPOSAL OF HAZARDOUS MATERIALS
02221 EXCAVATION, FILLING AND BACKFILLING FOR BUILDINGS
02225 EARTHWORK FOR ROADWAYS, RAILROADS, AND AIRFIELDS
02233 GRADED-CRUSHED-AGGREGATE BASE COURSE
02316 EXCAVATION, TRENCHING, AND BACKFILLING FOR UTILITIES SYSTEMS
02511 CONCRETE SIDEWALKS AND CURB AND GUTTERS
02551 BITUMINOUS PAVING FOR ROADS, STREETS AND OPEN STORAGE AREAS
02558 BITUMINOUS TACK AND PRIME COATS
02580 PAVEMENT MARKINGS
02660 WATER DISTRIBUTION SYSTEM
02685 GAS DISTRIBUTION SYSTEM
02714 DRAINAGE LAYER
02720 STORM-DRAINAGE SYSTEM
02730 SANITARY SEWERS
02754 CONCRETE PAVEMENTS FOR SMALL PROJECTS
02821 FENCING
02935 TURF

DIVISION 03 - CONCRETE

03100 STRUCTURAL CONCRETE FORMWORK
03200 CONCRETE REINFORCEMENT
03250 EXPANSION JOINTS, CONTRACTION JOINTS, AND WATERSTOPS

03300 CAST-IN-PLACE STRUCTURAL CONCRETE

DIVISION 04 - MASONRY

04200 MASONRY

DIVISION 05 - METALS

05120 STRUCTURAL STEEL
05210 STEEL JOISTS
05300 STEEL DECKING
05500 MISCELLANEOUS METAL

DIVISION 06 - WOODS & PLASTICS

06100 ROUGH CARPENTRY

DIVISION 07 - THERMAL & MOISTURE PROTECTION

07220 ROOF INSULATION
07412 NON-STRUCTURAL METAL ROOFING
07413 METAL SIDING
07600 SHEET METALWORK, GENERAL
07840 FIRESTOPPING
07900 JOINT SEALING

DIVISION 08 - DOORS & WINDOWS

08110 STEEL DOORS AND FRAMES
08120 ALUMINUM DOORS AND FRAMES
08330 OVERHEAD ROLLING DOORS
08520 ALUMINUM WINDOWS
08700 BUILDERS' HARDWARE
08810 GLASS AND GLAZING

DIVISION 09 - FINISHES

09250 GYPSUM WALLBOARD
09310 CERAMIC TILE
09510 ACOUSTICAL CEILINGS
09650 RESILIENT FLOORING
09900 PAINTING, GENERAL

DIVISION 10 - SPECIALTIES

10100 VISUAL COMMUNICATIONS SPECIALTIES
10160 TOILET PARTITIONS
10211 FIXED METAL WALL LOUVERS
10430 EXTERIOR SIGNAGE
10440 INTERIOR SIGNAGE
10522 FIRE EXTINGUISHERS, CABINETS, AND ACCESSORIES
10800 TOILET ACCESSORIES
10900 MANUFACTURED WARDROBES

DIVISION 12 - FURNISHINGS

12320 CABINETS AND COUNTERTOPS
12490 WINDOW TREATMENT

DIVISION 13 - SPECIAL CONSTRUCTION

13080 SEISMIC PROTECTION FOR MECHANICAL AND ELECTRICAL EQUIPMENT
13090 X-RAY SHIELDING
13100 LIGHTNING PROTECTION SYSTEM
13120 STANDARD METAL BUILDING SYSTEMS

DIVISION 14 - CONVEYING SYSTEMS

14602 CRANES, SINGLE-GIRDER BRIDGE, MONORAIL AND JIB

DIVISION 15 - MECHANICAL

15080 THERMAL INSULATION FOR MECHANICAL SYSTEMS
15330 WET PIPE SPRINKLER SYSTEM, FIRE PROTECTION
15400 PLUMBING, GENERAL PURPOSE
15488 GAS PIPING SYSTEM
15565 HEATING SYSTEM; GAS-FIRED HEATERS
15653 AIR-CONDITIONING SYSTEM (UNITARY TYPE)
15895 AIR SUPPLY, DISTRIBUTION, VENTILATION, AND EXHAUST SYSTEM
15940 OVERHEAD VEHICLE TAILPIPE [AND WELDING FUME] EXHAUST SYSTEM(S)
15951 DIRECT DIGITAL CONTROL FOR HVAC
15990 TESTING, ADJUSTING, AND BALANCING OF HVAC SYSTEMS
15995 COMMISSIONING OF HVAC SYSTEMS

DIVISION 16 - ELECTRICAL

16370 ELECTRICAL DISTRIBUTION SYSTEM, AERIAL
16375 ELECTRICAL DISTRIBUTION SYSTEM, UNDERGROUND
16415 ELECTRICAL WORK, INTERIOR

16528 EXTERIOR LIGHTING INCLUDING SECURITY AND CCTV APPLICATIONS
16710 PREMISES DISTRIBUTION SYSTEM
16711 TELEPHONE SYSTEM, OUTSIDE PLANT
16721 FIRE DETECTION AND ALARM SYSTEM

-- End of Project Table of Contents --

OMB APPROVAL NO. 2700-0042

SOLICITATION, OFFER, AND AWARD (Construction, Alteration, or Repair)	1. SOLICITATION NO.	2. TYPE OF SOLICITATION	3. DATE ISSUED	PAGE OF PAGES
	DACA27-99-B-0018	☒ SEALED BID (SFB) ☐ NEGOTIATED	May 10,1999	1 of 5

IMPORTANT - The "offer" section on the reverse must be fully completed by offeror.

4. CONTRACT NO.	5. REQUISITION/PURCHASE REQUEST NO.	6. PROJECT NO.

7. ISSUED BY CODE	8. ADDRESS OFFER TO
U.S. Army Engineer District, Louisville Corps of Engineers 600 Dr. Martin Luther King, Jr. Place Louisville, Kentucky 40202-2230	U.S. Army Engineer District, Louisville Corps of Engineers 600 Dr. Martin Luther King, Jr. Place, Room 821 Louisville, Kentucky 40202-2230

9. FOR INFORMATION CALL:	A. NAME	B. TELEPHONE NO. *(Include area code)* ***(NO COLLECT CALLS)***
	See Instructions	See Instruction

SOLICITATION

NOTE: In sealed bid solicitations "offer" and "offeror" mean "bid" and "bidder."

10. THE GOVERNMENT REQUIRES PERFORMANCE OF THE WORK DESCRIBED IN THESE DOCUMENTS *(Title, identifying no., date):*

CONSTRUCTION OF CONSOLIDATED MAINTENANCE FACILITY, NIAGARA FALLS, NEW YORK

Project consist of a steel frame with masonry and metal skin. The roof is a standing seam metal type. the facility is fully handicap accessible in accordance with ADA.

The estimated cost range of this project is from $1,000,000.00 to $5,000,000.00

BID MODIFICATIONS RECEIVED BY FACSIMILE OR TELETYPE WILL NOT BE CONSIDERED.

AWARD IS BEING MADE PURSUANT TO THE SMALL BUSINESS COMPETITIVENESS DEMONSTRATION PROGRAM.

DEFENSE PRIORITY AND ALLOCATION REQUIREMENTS (SEP 1990) FAR 52.211-14: This is a rated order certified for national defense use, and the Contractor shall follow all the requirements of the Defense Priorities and Allocations System regulation (15 CFR 700), PRIORITY RATING: DO-C2

11. The Contractor shall begin performance within _10_ calendar days and complete it within _**_ calendar days after receiving ☐ award, ☒ notice to proceed. This performance period is ☒ mandatory, ☐ negotiable. *(See **Section 00800, Para 1.)*

12A. THE CONTRACTOR MUST FURNISH ANY REQUIRED PERFORMANCE AND PAYMENT BONDS?	12B. CALENDAR DAYS
☒ YES ☐ NO	10

13. ADDITIONAL SOLICITATION REQUIREMENTS:

A. Sealed offers in original and _2__ copies to perform the work required are due at the place specified in Item 8 by 2:00 p.m. local time 10 June 1999. If this is a sealed bid solicitation, offers must be publicly opened at that time. Sealed envelopes containing offers shall be marked to show the offeror's name and address, the solicitation number, and the date and time offers are due.

B. An offer guarantee ☒ is, ☐ is not required.

C. All offers are subject to the (1) work requirements, and (2) other provisions and clauses incorporated in the solicitation in full text or by reference.

D. Offers providing less than __60___ calendar days for Government acceptance after the date offers are due will not be considered and will be rejected.

OFFER *(Must be fully completed by offeror)*

14. NAME AND ADDRESS OF OFFEROR *(Include ZIP Code)*	15. TELEPHONE NO. *(Include area code)*
DUNS #	16. REMITTANCE ADDRESS *(Include only if different than Item 14)* TIN #
CODE FACILITY CODE	

17. The offeror agrees to perform the work at the prices specified below in strict accordance with the terms of this solicitation, if this offer is accepted by the Government within __60___ calendar days after the date offers are due. *(Insert any number equal to or greater than the minimum requirement stated in Item 13D. Failure to insert any number means the offeror accepts the minimum in Item 13D.)*

AMOUNTS	Bidders shall show his prices on the Bid Schedule of this section.

18. The offeror agrees to furnish any required performance and payment bonds.

19. ACKNOWLEDGMENT OF AMENDMENTS

The offeror acknowledges receipt of amendments to the solicitation -- give number and date of each

AMENDMENT NO.										
DATE										

20A. NAME AND TITLE OF PERSON AUTHORIZED TO SIGN OFFER *(Type or print)*	20B. SIGNATURE	20C. OFFER DATE

AWARD *(To be completed by Government)*

21. ITEMS ACCEPTED:

22. AMOUNT	23. ACCOUNTING AND APPROPRIATION DATA	
24. SUBMIT INVOICES TO ADDRESS SHOWN IN *(4 copies unless otherwise specified) Will be identified in Delegation letters.*	ITEM: Sec 105 Para. 30	25. OTHER THAN FULL AND OPEN COMPETITION PURSUANT TO ☐ 10 U.S.C. 2304(c)( ) ☐ 41 U.S.C. 253(c)( )
26. ADMINISTERED BY CODE New York District 26 Federal Plaza New York, NY 10278-0090		27. PAYMENT WILL BE MADE BY USACE Finance Ctr. (UFC) 5720 Integrity Drive EFT:T Millington, TN 38054-5005

CONTRACTING OFFICER WILL COMPLETE ITEM 28 OR 29 AS APPLICABLE

☐ 28. NEGOTIATED AGREEMENT *(Contractor is required to sign this document and return ____ copies to issuing office.)* Contractor agrees to furnish and deliver all items or perform all work, requisitions identified on this form and any continuation sheets for the consideration slated in this contract. The rights and obligations of the parties to this contract shall be governed by (a) this contract award, (b) the solicitation, and (c) the clauses, representations, certifications, and specifications or incorporated by reference in or attached to this contract.		☐ 29. AWARD *(Contractor is not required to sign this document* Your offer on this solicitation is hereby accepted as to the items listed. This award consummates the contract, which consists of (a) the Government solicitation and your offer, and (b) this contract award. No further contractual document is necessary.	
30A. NAME AND TITLE OF CONTRACTOR OR PERSON AUTHORIZED TO SIGN *(Type or print)*		31A. NAME OF CONTRACTING OFFICER *(Type or print)*	
30B. SIGNATURE	30C. DATE	31B. UNITED STATES OF AMERICA BY	31C. AWARD DATE

ALL BIDDERS READ THE FOLLOWING INSTRUCTIONS

1. Each bidder shall, upon request of the Contracting Officer, furnish a list of the plant available to the bidder and proposed for use of the work.

2. Bidders are cautioned that drawings may not be reproduced to exact scale. All drawings, whether full size or reduced, should be checked for potential discrepancies, dimensions and scales should be verified and all drawings compared.

3. Bidders are required to acknowledge receipt of all amendments to this solicitation on Standard Form 1442 in the space provided, by completing Blocks 8 and 15 of the Amendment Form (SF 30), by separate letter, or by telegram prior to opening of bids. Failure to acknowledge all amendments may cause rejection of the bid/proposal.

4. Telegraph modifications may be received at the bidding office by telephone from the receiving telegraph company. The telegraph company shall call (502) 582-5591 to deliver the message. The telegraph company shall confirm the message by sending a copy of the written telegram to the bidding office within 7 calendar days of delivery of the telephone message.

CAUTION TO BIDDERS

BEFORE SIGNING AND MAILING THIS BID, PLEASE TAKE NOTE OF THE FOLLOWING, AS FAILURE TO PERFORM ANY ONE OF THESE ACTIONS MAY CAUSE YOUR BID TO BE REJECTED.

1. **AMENDMENTS**. Have you acknowledge receipt of ALL amendments? If in doubt as to the number of amendments issued, please contact our office.

2. **AMENDED BID PAGES**. If any of the amendments furnished amended bid pages, the amended bid pages must be used for preparation of your bid.

3. **LATE BIDS**. Please refer to the Instructions section contained in this package.

4. **BID GUARANTEE**. If bid guarantee is required for this project, sufficient bid guarantee in proper form must be furnished with your bid for construction projects exceeding $100,000.

5. **MISTAKE IN BID**. Have you reviewed your bid prices for possible errors in calculations or work left out?

6. **FAX MODIFICATIONS OF BIDS**. We do not permit modifications of bids by fax.

BID SCHEDULE

CONTINUATION SHEET	REFERENCE NO. DOCUMENT BEING CONTUNUED DACA27-99-B-0018	PAGE 5 of 5

NAME OF OFFEROR OR CONTRACTOR

ITEM NO.	SUPPLIES/SERVICES	QTY	UNIT	UNIT PRICE	AMOUNT
	Consolidated Maintenance Facility Niagara Falls, New York				
1	Consolidated Maintenance Facility	1	JOB	L/S	$_____
	TOTAL BASE				$_____
	BID OPTIONS				
1	Demolition of Building 706 and site restoration	1	JOB	L/S	$_____
	rices for the options shall be good for 120 days after award of the contract. The project duration shown in Section 00800, para. 1 will not be affected by the exercising of the options. Special Bid Conditions. If a modification to a bid based on unit prices is submitted, which provides for a lump sum adjustment to the total estimated cost, the application of the lump sum adjustment to each unit price in the bid schedule must be stated. If it is not stated, the bidder agrees that the lump sum adjustment shall be applied on a pro rata basis to every unit price in the bid schedule.				

BID SCHEDULE

CONTINUATION SHEET	REFERENCE NO. DOCUMENT BEING CONTUNUED DACA27-99-B-0018	PAGE 5 of 5

NAME OF OFFEROR OR CONTRACTOR

16 February 1999

SECTION 00105

INSTRUCTIONS FOR SEALED BID CONTRACTS

2 Jan 96
1. SOLICITATION DEFINITIONS - SEALED BIDDING - (July 1987) FAR 52.214-1.

"Government" means United States Government. "Offer" means "bid" in sealed bidding. "Solicitation" means an invitation for bids in sealed bidding.

2. AMENDMENTS TO INVITATIONS FOR BIDS (DEC 1989) FAR 52.214-3.

(a) If this solicitation is amended, then all terms and conditions which are not modified remain unchanged.

(b) Bidders shall acknowledge receipt of any amendment to this solicitation (1) by signing and returning the amendment, (2) by identifying the amendment number and date in the space provided for this purpose on the form for submitting a bid, 3) by letter or telegram, or (4) by facsimile, if facsimile bids are authorized in the solicitation. The Government must receive the acknowledgment by the time and at the place specified for receipt of bids.

3. FALSE STATEMENTS IN BIDS (APR 1984) FAR 52.214-4.

Bidders must provide full, accurate, and complete information as required by this solicitation and its attachments. The penalty for making false statements in bids is prescribed in 18 U.S.C. 1001.

20 March 1997
4. SUBMISSION OF BIDS (MAR 1997) FAR 52.214-5 (Para. a-e only).

(a) Bids and bid modifications shall be submitted in sealed envelopes or packages, (unless submitted by electronic means).

(1) Addressed to: U.S. Army Engineer District, Louisville
600 Dr. Martin Luther King, Jr. Place
Room 821
Louisville, Kentucky 40202-2230

(2) Showing the time specified for receipt, the solicitation number, and the name and address of the bidder.

(b) Bidders using commercial carrier services shall ensure that the bid is addressed and marked on the outermost envelope or wrapper as prescribed in subparagraphs (a)(1) and (2) of this provision when delivered to the office specified in the solicitation.

(c) Telegraphic bids will not be considered unless authorized by the solicitation; however, bids may be modified or withdrawn by written or telegraphic notice.

(d) Facsimile bids, modifications, or withdrawals will not be considered unless authorized by the solicitation.

(e) Bids submitted by electronic commerce shall be considered only if the electronic commerce method was specifically stipulated or permitted by the solicitation.

(f) Hand-carried bids shall be deposited in the depository located in Room 821, Federal Building, 600 Dr. Martin Luther King, Jr. Place, Louisville, Kentucky.

(g) Express mail bids shall be addressed as shown in Paragraph (a) (1) above, ATTN: CEORLCT/Hitner.

5. EXPLANATION TO PROSPECTIVE BIDDERS (APR 1984) FAR 52.214-6.

Any prospective bidder desiring an explanation or interpretation of the solicitation, drawings, specifications, etc., must request it in writing soon enough to allow a reply to reach all prospective bidders before the submission of their bids. Oral explanations or instructions given before the award of a contract will not be binding. Any information given a prospective bidder concerning a solicitation will be furnished promptly to all other prospective bidders as an amendment to the solicitation, if that information is necessary in submitting bids or if the lack of it would be prejudicial to other prospective bidders.

20 March 1997
6. LATE SUBMISSIONS, MODIFICATIONS, AND WITHDRAWALS OF BIDS (MAY 1997) FAR 52.214-7.

(a) Any bid received at the office designated in the solicitation after the exact time specified for receipt will not be considered unless it is received before award is made and it--

(1) Was sent by registered or certified mail not later than the fifth calendar day before the date specified for the receipt of bids (e.g., a bid submitted in response to a solicitation requiring receipt of bids by the 20th of the month must have been mailed by the 15th); or

(2) Was sent by mail (or telegram or facsimile, if authorized) or hand-carried (including delivery by a commercial carrier) if it is determined by the Government that the late receipt was due primarily to Government mishandling after receipt at the Government installation;

(3) Was sent by U.S. Postal Service Express Mail Next Day Service-Post Office to Addressee, not later than 5:00 P.M. at the place of mailing two working days prior to the date specified for receipt of bids. The term "working days" excludes weekends and U.S. Federal holidays; or

(4) Was transmitted through an electronic commerce method authorized by the solicitation and was received at the initial point of entry to the Government infrastructure not later than 5:00 p.m. one working day prior to the date specified for receipt of bids.

(b) Any modification or withdrawal of a bid is subject to the same conditions as in paragraph (a) of this provision.

(c) The only acceptable evidence to establish the date of mailing of a late bid, modification, or withdrawal sent either by registered or certified mail is the U.S. or Canadian Postal Service postmark both on the envelope or wrapper and on the original receipt from the U.S. or Canadian Postal Service. Both postmarks must show a legible date or the bid, modification, or withdrawal shall be processed as if mailed late. "Postmark" means a printed, stamped, or otherwise placed impression (exclusive of a postage meter machine impression) that is readily identifiable without further action as having been supplied and affixed by employees of the U.S. or Canadian Postal Service on the date of mailing. Therefore, bidders should request the postal clerk to place a legible hand cancellation bull's-eye postmark on both the receipt and the envelope or wrapper.

(d) The only acceptable evidence to establish the time of receipt at the Government installation is the time/date stamp of that installation on the bid wrapper or other documentary evidence of receipt maintained by the installation.

(e) The only acceptable evidence to establish the date of mailing of a late bid, modification, or withdrawal sent by U.S. Postal Service Express Mail Next Day Service-Post Office to Addressee is the date entered by the post office receiving clerk on the "Express Mail Next Day Service-Post Office to Addressee" label and the postmark on the envelope or wrapper and on the original receipt from the U.S. Postal Service. "Postmark" has the same meaning as defined in paragraph (c) of this provision, excluding postmarks of the Canadian Postal Service. Therefore, bidders should request the postal clerk to place a legible hand cancellation bull's-eye postmark on both the receipt and the envelope or wrapper.

(f) Notwithstanding paragraph (a) of this provision, a late modification of an otherwise successful bid that makes its terms more favorable to the Government will be considered at any time it is received and may be accepted.

(g) Bids may be withdrawn by written notice or telegram (including mailgram) received at any time before the exact time set for receipt of bids. If the solicitation authorizes facsimile bids, bids may be withdrawn via facsimile received at any time before the exact time set for receipt of bids subject to the conditions specified in the provision entitled “Facsimile Bids.” A bid may be withdrawn in person by a bidder or its authorized representative if, before the exact time set for receipt of bids, the identify of the person requesting withdrawal is established and the person signs a receipt for the bid.

(h) If an emergency or unanticipated event interrupts normal Government processes so as to cause postponement of the scheduled bid opening, and urgent Government requirements preclude amendment of the solicitation or other notice of an extension of the opening date, the time specified for receipt of bids will be deemed to be extended to the same time of day specified in the solicitation on the first work day on which normal Government processes resume.

7. PREPARATION OF BIDS - CONSTRUCTION (APR 1984) FAR 52.214-18.

(a) Bids must be (1) submitted on the forms furnished by the Government or on copies of those forms, and (2) manually signed. The person signing a bid must initial each erasure or change appearing on any bid form.

(b) The bid form may require bidders to submit prices for one or more items on various bases, including -

(1) Lump sum bidding;
(2) Alternate prices;
(3) Units of construction; or
(4) Any combination of subparagraphs (1) through (3) above.

(c) If the solicitation requires bidding on all items, failure to do so will disqualify the bid. If bidding on all items is not required, bidders should insert the words "no bid" in the space provided for any item on which no price is submitted.

(d) Alternate bids will not be considered unless this solicitation authorizes their submission.

8. NOT USED.

9. NOT USED.

10. BIDDER'S QUALIFICATIONS.

Before a bid is considered for award, the bidder may be requested by the Government to submit a statement regarding his previous experience in performing comparable work, his business and technical organization,

financial resources, and plant available to be used in performing the work. The successful bidders will be required to submit his Workman's Compensation Experience Modification Rate (EMR) for the previous 3 years.

11. NOT USED.

28 March 1998
12. BID GUARANTEE (SEP 1996) FARS 52.228-1 (Para. (a) - (e) only).

(a) Failure to furnish a bid guarantee in the proper form and amount, by the time set for opening of bids, may be cause for rejection of the bid.

(b) The bidder shall furnish a bid guarantee in the form of a firm commitment, such as a bid bond supported by good and sufficient surety or sureties acceptable to the Government, postal money order, certified check, cashier's check, irrevocable letter of credit, or, under Treasury Department regulations, certain bonds or notes of the United States. The Contracting Officer will return bid guarantees, other than bid bonds, (1) to unsuccessful bidders as soon as practicable after the opening of bids, and (2) to the successful bidder upon execution of contractual documents and bonds (including any necessary coinsurance or reinsurance agreements), as required by the bid as accepted.

(c) The amount of the bid guarantee shall be 20 percent of the bid price or $3,000,000, whichever is less.

(d) If the successful bidder, upon acceptance of its bid by the Government within the period specified for acceptance, fails to execute all contractual documents or furnish executed bond(s) within 10 days after receipt of the forms by the bidder, the Contracting Officer may terminate the contract for default.

(e) In the event the contract is terminated for default, the Bidder is liable for any cost of acquiring the work that exceeds the amount of its bid, and the bid guarantee is available to offset the difference.

(f) The Bid Bond penalty may be expressed in terms of a percentage of the bid price or may be expressed in dollars and cents. Bid bonds are not required for projects under $100,000.

(g) Individual Sureties. See Paragraph 15.

20 March 1997
13. PERFORMANCE AND PAYMENT BONDS. After the prescribed forms are presented to the bidder to whom award is made for signature, a written contract on the form prescribed by the specifications shall be executed and two bonds, each with good and sufficient surety or sureties acceptable to the Government shall be furnished: a Performance Bond (Standard Form 25) and a Payment Bond (Standard Form 25A). The penal sums of such bonds will be as follows:

(a) Performance Bond. The penal sum of the performance bond shall equal one hundred percent (100%) of the contract price.

(b) Payment Bond.

(1) When the contract price is $1,000,000 or less, the penal sum will be fifty percent (50%) of the contract price.

(2) When the contract price is in excess of $1,000,000 but not more than $5,000,000, the penal sum shall be forty percent (40%) of the contract price.

(3) When the contract price is more than $5,000,000 the penal sum shall be $2,500,000.

(c) For rules covering the use of individual sureties see Paragraph 15. Any bonds furnished will be furnished by the Contractor to the Government prior to commencement of contract performance.

14. NOT USED.

15. RULES FOR USE OF INDIVIDUAL SURETIES.

(a) One individual surety is adequate support for a bond, provided the unencumbered value of the assets pledged by that individual surety equal or exceed the amount of the bond. An offeror may submit up to three individual sureties for each bond, in which case the pledged assets when combined must equal or exceed the penal amount of the bond. Each individual surety must accept both joint and several liability to the extent of the penal amount of the bond.

(b) An individual surety may be accepted only if a security interest in acceptable assets is provided to the Government by the individual surety. The security interest shall be furnished with the bond, and may be provided by one or a combination of the following methods:

(1) An escrow account with a federally insured financial institution in the name of the contracting agency.

(2) A lien on real property, subject to restrictions contained herein.

(c) Acceptable assets include:

(1) Cash or certificates of deposit, or other cash equivalents with a federally insured financial institution;

(2) United States Government securities at market value;

(3) Stocks and bonds actively traded on a national U.S. security exchange with certificates issued in the name of the individual surety (these assets will be accepted at 90 percent of their 52 week low, as reflected at the time of submission of the bond);

(4) Real property owned in fee simple by the surety without any form of concurrent ownership (these assets will be accepted at 100 percent of the most current tax assessment value exclusive of encumbrances or 75 percent of the properties' unencumbered market value provided a current appraisal is furnished);

(5) Irrevocable letters of credit (ILC) issued by a federally insured financial institution in the name of the contracting agency and which identify the agency and solicitation or contract number for which the ILC is provided.

(d) Unacceptable assets include but are not limited to:

(1) Notes or accounts receivable;

(2) Foreign securities;

(3) Real property as follows:

a. Real property located outside the United States, its territories, or possessions.

b. Real property which is a principal residence of the surety.

c. Real property owned concurrently regardless of the form

of co-tenancy except where all co-tenants agree to act jointly.

d. Life estates, leasehold estates, or future interests in real property.

(4) Personal property such as jewelry, furs, antiques;

(5) Stocks and bonds of the individual surety in a controlled, affiliated, or closely held concern of the Offeror/Contractor;

(6) Corporate assets (e.g., plant and equipment);

(7) Speculative assets (e.g., mineral rights);

(8) Letters of credit, except as provided in subparagraph c(5) above.

(e) With respect to the acceptance of real property, the individual surety shall provide:

(1) Evidence of title in the form of a certificate of title prepared by a title insurance company approved by the United States Department of Justice;

(2) Evidence of the amount due under any encumbrance shown in the evidence of title;

(3) A copy of the current real estate tax assessment of the property or a current appraisal dated no earlier than 6 months prior to the date of the bond, prepared by a professional appraiser who certifies that the appraisal has been conducted in accordance with the generally accepted appraisal standards as reflected in the Uniform Standards of Professional Appraisal Practice.

(4) Failure to provide evidence that the lien has been properly recorded will render the offeror nonresponsible.

(f) An individual may be excluded from acting as individual surety on bonds for any of the following causes:

(1) Failure to fulfill the obligations under any bond.

(2) Failure to disclose all bond obligations.

(3) Misrepresentation of the value of available assets or outstanding liabilities.

(4) Any false or misleading statement, signature or representation on a bond or affidavit of individual suretyship.

(5) Any other cause affecting responsibility as a surety of such serious and compelling nature as may be determined to warrant exclusion.

An individual surety excluded pursuant to this subsection shall be included on the list entitled "Parties Excluded from Procurement Programs."

(g) Any bidder or offeror should carefully review these requirements which are set forth in Section 28 of the Federal Acquisition Regulations (FAR).

20 March 1997
16. SITE VISIT FAR (APR 1984) 52.237-1.

Offerors or quoters are urged and expected to inspect the site where services are to be performed and to satisfy themselves regarding all general and local conditions that may affect the cost of contract performance, to the extent that the information is reasonably obtainable. In no event shall failure to inspect the site constitute grounds for a claim after contract award. Site visits may be arranged during normal duty hours by contacting:

Joe Salvatore
US Arm Engineer District, NY
Buffalo Project Office
C/O 914 AW NFIAP
Niagara Falls, New York 14304-5001

22 Jan 99
17. REQUESTS FOR INFORMATION. Telephone inquiries relating to this procurement should be directed to the Louisville District, Corps of Engineers, as listed below: ORAL EXPLANATIONS OR INSTRUCTIONS GIVEN BEFORE THE AWARD OF A CONTRACT WILL NOT BE BINDING. SEE PARAGRAPH 5: "EXPLANATION TO PROSPECTIVE BIDDERS" FOR PROPER PROCEDURES.

Procurement of Plans
& Specifications—Barbara Rich.....502/582-5815
Prospective Offerors may find the planholders list on the Internet at
http://www.lrl.usace.army.mil/ct/ct_pages.htm

Technical Questions on Plans
& Specifications—Thomas Walker.....502/582-6906
thomas.p.walker@lrl02.usace.army.mil
Fax Number: (502)582-6906

18. LOCATION OF BID OPENING. Directions and map to the bid opening address are attached at the end of this section.

24 Sep 1998
19. AVAILABILITY OF SPECIFICATIONS LISTED THE IN GSA INDEX OF FEDERAL SPECIFICATIONS, STANDARDS AND COMMERCIAL ITEM DESCRIPTIONS, FPMR Part 101-29 (AUG 1998) FAR 52.211-1

(a) The GSA Index of Federal Specifications, Standards and Commercial Item Descriptions, FPMR Part 101-29, and copies of specifications, standards, and commercial item descriptions cited in this solicitation may be obtained for a fee by submitting request to—

GSA Federal Supply Service
Specifications Section, Suite 8100
470 East L'Enfant Plaza, SW
Washington, DC 20407, Telephone (202) 619-8925,
Facsimile (202) 619-8978

(b) If the General Services Administration, Department of Agriculture, or Department of Veterans Affairs issued this solicitations, a single copy of specifications, standards, and commercial item descriptions cited in this solicitation may be obtained free of charge by submitting a request to the addressee in paragraph (a) of this provision. Additional copies will be issued for a fee.

4 August 1998
20. AVAILABILITY OF SPECIFICATIONS LISTED IN THE DOD INDEX OF SPECIFICATIONS AND STANDARDS (DODISS) AND DESCRIPTIONS LISTED IN THE ACQUISITION MANAGEMENT SYSTEMS AND DATA REQUIREMENTS CONTROL LIST, DOD 5010.12-L (AUG 1998) FAR 52.211-2

(a) Copies of specifications, standards, and data item descriptions cited in this solicitation may be obtained for a fee by submitting a request to the—

Department of Defense Single Stock Point (DoDSSP)
Building 4, Section D
700 Robbins Avenue
Philadelphia, PA 19111-5094
Telephone (215) 697-2667/2179
Facsimile (215) 697-1462

(b) Order forms, pricing information, and customer support information may be obtained—

(1) By telephone (215) 697-2667/2179; or

(2) Through the DoDSSP Internet site at http://www.dodssp.daps.mil.

20 March 1997
21. AVAILABILITY OF SPECIFICATIONS AND STANDARDS NOT LISTED IN DODISS, DATA ITEM DESCRIPTIONS NOT LISTED IN DOD 5010.12-L, AND PLANS, DRAWINGS, AND OTHER PERTINENT DOCUMENTS (DEC 1991) DFARS 252.211-7001

Offerors may obtain the specifications, standards, plans, drawings, data item descriptions, and other pertinent documents cited in this solicitation by submitting a request to:

Technical Point of Contact stated in Paragraph 17.

Include the number of the solicitation and the title and number of the specification, standard, plan, drawings, or other pertinent document.

22. NOT USED.

16 Feb 1999
23. INDUSTRY SMALL BUSINESS SIZE STANDARDS (JAN 1999) FAR 19.102.

23.1 General.

(a) The SBA establishes small business size standards on an industry-by-industry basis. (See 13 CFR 121.)

(b) Small business size standards are applied by--

(1) Classifying the product or service being acquired in the industry whose definition, as found in the Standard Industrial Classification (SIC) Manual, best describes the principal nature of the product or service being acquired.

(2) Identifying the size standard SBA established for that industry; and

(3) Specifying the size standard in the solicitation, so that offerors can appropriately represent themselves as small or large.

(c) For size standard purposes, a product or service shall be classified in only one industry, whose definition best describes the principal nature of the product or service being acquired even though for other purposes it could be classified in more than one.

(d) When acquiring a product or service that could be classified in two or more industries with different size standards, contracting officers shall apply the size standard for the industry accounting for the greatest percentage of the contract price.

(e) If a solicitation calls for more than one item and allows offers to be submitted on any or all of the items, an offeror must meet the size standard for each item it offers to furnish. If a solicitation calling for more than one item requires offers on all or none of the items, an offeror may qualify as a small business meeting the size standard for the item accounting for the greatest percentage of the total contract price.

(f) Any concern which submits a bid or offer in its own name, other than on a construction or service contract, but which proposes to furnish a product which it did not itself manufacture, is deemed to be a small business when it has no more than 500 employees, and---

(1) In the case of Government acquisitions set-aside for small businesses, such nonmanufacturer must furnish in the performance of the contract the product of a small business manufacturer or producer, which end product must be manufactured or produced in the United States. The term "nonmanufacturer" includes a concern which can manufacture or produce the product referred to in the specific acquisition but does not do so in connection with that acquisition. For size determination purposes there can be only one manufacturer of the end item being procured. The manufacturer of the end item being acquired is the concern which, with its own forces, transforms inorganic or organic substances including raw materials and/or miscellaneous parts or components into such end item. Whether a bidder on a particular acquisition is the manufacturer or a nonmanufacturer for the purpose of a size determination need not be consistent with whether such concern is or is not a manufacturer for the purpose of the Walsh-Healey Act.

(2) A concern which purchases items and packages them into a kit is considered to be a nonmanufacturer small business and can qualify as such for a given acquisition if it meets the size qualifications of a small nonmanufacturer for acquisition, and if more than 50 percent of the total value of the kit and its contents is accounted for by items manufactured by small business.

(3) For the purpose of receiving a Certificate of Competency on an unrestricted acquisition, a small business nonmanufacturer may furnish any domestically produced or manufactured product.

23.2 The industry size standards are set forth in the following table. The table column labeled "SIC" follows the standard industrial classification code as published by the Government in the Standard Industrial Classification Manual. The Manual is intended to cover the entire field of economic activities. It classifies and defines activities by industry categories and is the source used by SBA as a guide in defining industries for size standards. The number of employees or annual receipts indicates the maximum allowed for a concern, including its affiliates, to be considered small.

23.3 Size standards for construction and special trades.

A concern is small if its average annual receipts for its preceding 3 fiscal years did not exceed $17 million. However, if 75 percent or more of the work (in terms of dollar value) called for by the contract is classified in one of the industries, subindustries, or classes of products listed in this paragraph, the concern is small if its average annual receipts for its preceding 3 fiscal years did not exceed the size standard for that industry, subindustry, or class of products. (See Division C, "Contract Construction," of the SIC Manual).

Classification Code	Industry, Subindustry, or Class of Products	Size Standard*
	MAJOR GROUP 15--BUILDING CONSTRUCTION--GENERAL CONTRACTORS	

AND OPERATIVE BUILDERS

1521	General Contractors--Single-Family House	$17.0
1522	General Contractors--Residential Buildings, Other Than Single-Family	17.0
1531	Operative Builders	17.0
1541	General Contractors--Industrial Buildings and Warehouses	17.0
1542	General Contractors--Nonresidential Buildings Other Than Industrial Buildings and Warehouse	17.0

MAJOR GROUP 16--CONSTRUCTION OTHER THAN BUILDING CONSTRUCTION--GENERAL CONTRACTORS

1611	Highway and Street Construction, Except Elevated Highway	17.0
1622	Bridge, Tunnel, and Elevated Highway Construction	17.0
1623	Water, Sewer, Pipe Line, Communication and Power Line Construction	17.0
1629	Heavy Construction, Except Dredging N.E.C.	17.0
1629	Dredging and Surface Cleanup Activities	13.5

MAJOR GROUP 17--CONSTRUCTION--SPECIAL TRADE CONTRACTORS

1711	Plumbing, heating (except electric), and air conditioning	$7
1721	Painting, paperhanging, and decorating	7
1731	Electrical Work	7
1741	Masonry, stone setting, and other stonework	7
1742	Plastering, drywall, acoustical and insulation work	7
1743	Terrazzo, tile, marble, and mosaic work	7
1751	Carpentry Work	7
1752	Floor laying and other floorwork, not elsewhere classified	7
1761	Roofing, siding and sheet metal work	7
1771	Concrete work	7
1781	Water well drilling	7
1791	Structural steel erection	7
1793	Glass and glazing work	7
1794	Excavating and foundation work	7
1795	Wrecking and demolition work	7
1796	Installation or erection of building equipment, not elsewhere classified	7
1799	Special trade contractors, not elsewhere classified	7

* (Average Annual Receipts) (Millions)

24. NOT USED.

2 Jan 96

25. ARITHMETIC DISCREPANCIES EFARS 52.214-5000.

(a) For the purpose of initial evaluations of bids, the following will be utilized in resolving arithmetic discrepancies found on the face of the bidding schedule as submitted by the bidder:

(1) Obviously misplaced decimal points will be corrected;

(2) In case of discrepancy between unit prices and extended price, the unit price will govern;

(3) Apparent errors in extension of unit prices will be corrected; and

(4) Apparent errors in addition of lump-sum and extended prices will be corrected.

(b) For the purposes of bid evaluation, the Government will proceed on the assumption that the bidder intends his bid to be evaluated on the basis of the unit prices, the totals arrived at by resolution of arithmetic discrepancies as provided above and the bid will be so reflected on the abstract of bids.

(c) These correction procedures shall not be used to resolve any ambiguity concerning which bid is low.

1 February 1995
26. WAGE RATES. The Wage Decisions of the Secretary of Labor are applicable to the work to be performed under this contract and are contained in SECTION 00800, SPECIAL CONTRACT REQUIREMENTS. Modifications are periodically made to the wage decisions. The complete modifications will be issued by amendment to the solicitation.

24 Sep 1998
27. MODIFICATIONS PRIOR TO DATE SET FOR OPENING BIDS. The right is reserved, as the interest of the Government may require, to revise or amend the specifications and/or drawings prior to the date set for opening of bids. Such revisions and amendments, if any, will be announced by an amendment or amendments to this Invitation for Bids. Copies of such amendments as may be issued will be furnished to all prospective bidders. If the revisions and amendments are of a nature which require material changes in quantities or prices bid or both, the date set for opening bids may be postponed by such number of days as in the opinion of the Contracting Officer will enable bidders to revise their bids. In such cases, the amendment will include an announcement of the new date for opening bids.

24 Sep 1998
(1)28. NOTICE OF BUY AMERICAN ACT REQUIREMENTS – CONSTRUCTION MATERIALS. (MAY 1997) FAR 52.225-12

(a) Offerors are required to comply with the requirements of Federal Acquisition Regulation (FAR) clause 52.225-5, Buy American Act – Construction Materials, of this solicitation. The terms “construction material” and “domestic construction material,” as used in this provision, have the meanings set forth in FAR clause 52.225-5.

(b) Offerors should request a determination regarding the inapplicability of the Buy American Act in time to allow determination before submission of offers. For evaluation of a request for a determination regarding the inapplicability of the requirements of the Buy American Act prior to the time set for receipt of offers, the information and applicable supporting data required by paragraphs (c) and (d) of Far clause 52.225-5 shall be included in the request. If an offeror has not requested a determination regarding the inapplicability of the Buy American Act prior to submission of its offer, or has not received a response to a request made prior to submission of its offer, the information and supporting data shall be included in the offer.

(c) Evaluation of offers.

(1) For evaluation of offers, (unless agency regulations specify a higher percentage) the Government will add to the offered price 6 percent of the cost of any foreign construction material proposed for exception from the requirements of the Buy American Act based on claimed unreasonable cost of domestic construction materials in accordance with paragraph (b)(3)(i) of FAR clause 52.225-5.

(2) If the evaluation of offers results in a tie between an offer including such foreign construction material excepted on the basis of unreasonable cost, as evaluated, and an offer including solely domestic construction material or other foreign construction material listed in the solicitation at paragraph (b)(2) of FAR clause 52.225-5, or subsequently excepted in accordance with paragraphs (b)(3)(ii) or (iii) of FAR clause 52.225-5, award shall be made to the offeror that submitted the latter offer.

(d) Alternate offers.

(1) When an offer includes foreign construction material not listed by the Government in the solicitation at paragraph (b)(2) of Far clause 52.225-5, offerors also may submit alternate offers base on use of equivalent domestic construction.

(2) If alternate offers are submitted, a separate Standard Form 142 shall be submitted for each alternate offer, and a separate price comparison table, prepared in accordance with paragraph (c) and (d) of FAR clause 52.225-5, shall be submitted for each offer that is based on the use of any foreign construction material for which the Government has not yet determined an exception to apply.

(3) If the Government determines that a particular exception requested under paragraph (c) of FAR clause 52.225-5 does not apply, the Government will evaluate only those offers based on use of the equivalent domestic construction material, and the offeror shall be required to furnish such domestic construction material.

(i) In sealed bid procurements, any offer based on use of that particular foreign construction material shall be rejected as nonresponsive.

(ii) In negotiated procurements, any offer based on use of that particular foreign construction material may not be accepted unless revised during negotiations.

29. LISTING OF EMPLOYMENT OPENINGS. Offerors should note that this solicitation includes a provision requiring the listing of employment openings with the local office of the State employment service system if the award is for $10,000 or more.

22 June 1998
30. SUBMISSION OF INVOICES.

In accordance with Section 00010, Para. 24, submit invoices to:

Joe Salvatore
US Army Engineer District, NY
Buffalo Project Office
C/O 914 AW NFIAP
Niagara Falls, New York 14304-5001

16 Feb 1999
31. NOTICE OF REQUIREMENT FOR AFFIRMATIVE ACTION TO ENSURE EQUAL EMPLOYMENT OPPORTUNITY FOR CONSTRUCTION (FEB 1999) FAR 52.222-23.

(a) The Offeror's attention is called to the EQUAL OPPORTUNITY and the AFFIRMATIVE ACTION COMPLIANCE REQUIREMENTS FOR CONSTRUCTION clauses of this solicitation.

(b) The goals for minority and female participation, expressed in percentage terms for the Contractor's aggregate workforce in each trade on all construction work in the covered area, are as follows:

.....

Goals for minority participation for each trade	Goals for female participation in each trade
7.7%	6.9%

.....

These goals are applicable to all the Contractor's construction work (whether or not it is Federal or Federally assisted) performed in the covered area. If the Contractor performs construction work (whether or not it is Federal or Federally assisted) in a geographical area located outside the covered area, it shall apply the goals established for the geographical area where such work is actually performed. Goals are published periodically in the Federal Register in notice form, and such notices may be obtained from any Office of Federal Contract Compliance Programs (OFCCP) Office.

(c) The Contractor's compliance with Executive Order 11246 as amended and the regulations in 41 CFR Part 60-4 shall be based on its implementation of the Equal Opportunity clause, specific affirmative action obligations required by the clause entitled "Affirmative Action Compliance Requirements for Construction" and its efforts to meet prescribed goals. The hours of minority and female employment and training must be substantially uniform throughout the length of the contract, and in each trade, and the Contractor shall make a good faith effort to employ minorities and women evenly on each of its projects. The transfer of minority or female employees or trainees from Contractor to Contractor or from project to project for the sole purpose of meeting the Contractor's goals shall be a violation of the contract, the Executive Order and the regulations in 41 CFR Part 60-4. Compliance with the goals will be measured against the total work hours performed.

(d) The Contractor shall provide written notification to the Deputy Assistant Secretary, for Federal Contract Compliance, U.S. Department of Labor within 10 working days of award of any construction subcontract in excess of $10,000 at any tier for construction work under the contract resulting from this solicitation. The notification shall list the---

(1) Name, address and telephone number of the subcontractor; (2) Employer’s identification number of the subcontractor; (3) Estimated dollar amount of the subcontract;
(4) Estimated starting and completion dates of the subcontract; and
(5)Geographical area in which the subcontract is to be performed.

(e) As used in this Notice, and in the contract resulting from this Solicitation, the "covered area" is the economic area of Buffalo, New York, which includes Erie County, New York.

16 Feb 1999
32. SUBCONTRACTING PLANS FOR SMALL BUSINESS CONCERNS. Bidders are cautioned that compliance with CONTRACT CLAUSE: SMALL BUSINESS SUBCONTRACTING PLAN requires that the apparent low bidder, upon request by the Contracting Officer, submit a subcontracting plan for subcontracting with small business, HUBZone small business, small disadvantaged business, and women-owned small business concerns. Bidders desiring assistance in developing a source list are encouraged to contact small business, HUBZone small business, small disadvantaged, and women-owned small business associations and appropriate Offices of Small and Disadvantaged Business Utilization, addresses which may

be obtained from the District Labor Adviser, U.S. Army Engineer District, P.O. Box 59, Louisville, Kentucky 40201 (Telephone 502/582-5679).

33. PERFORMANCE OF WORK BY CONTRACTOR. Attention is directed to SPECIAL CONTRACT REQUIREMENT: PERFORMANCE OF WORK BY CONTRACTOR. The apparent low bidder must furnish the Contracting Officer, within 5 working days after bid opening, a description of the work which he intends to perform with his own organization, e.g., earthwork, paving, brickwork, or roofing), the percentage of the total work this represents, and the estimated cost thereof.

15 September 1995
34. MODIFICATION OF BIDS BY FACSIMILE. Bidders WILL NOT be allowed to modify their bids at any time by facsimile or teletype.

35. PAYMENT FOR BOND PREMIUMS. CONTRACT CLAUSE: PAYMENTS UNDER FIXED-PRICE CONSTRUCTION CONTRACTS provides that upon presentation of evidence of full payment, the Government will immediately reimburse the Contractor the cost of premiums for performance and payment bonds. This reimbursement amount is not in addition to the amount bid for the work covered by this Invitation for Bids, and bidders are cautioned to include the cost of such premiums in the bid items shown on the Bidding Schedule (or in the lump sum amount of the bid if no bid items are listed). If bond premiums are reimbursed under this clause, such reimbursed amount will be recovered by the Government from the progress payments made to the Contractor or, if no progress payments are made, from the amount otherwise due the Contractor upon final payment.

36. NOT USED.

37. NOT USED.

20 March 1997
38. SERVICE OF PROTEST (AUG 1996) FAR 52.233-2.

(a) Protests, as defined in Section 33.101 of the Federal Acquisition Regulation, that are filed directly with an agency, and copies of any protests that are filed with the General Accounting Office (GAO) shall be served on the Contracting Officer (addressed as follows) by obtaining written and dated acknowledgment of receipt from:

Ms. Denise A. Bauer, Contracting Officer
U.S. Army Engineer District, Louisville
Corps of Engineers - ATTN: CEORLCT
600 Dr. Martin Luther King Jr. Place, Room 821
Louisville, Kentucky 40202-2230

(b) The copy of any protest shall be received in the office designated above on the same day a protest is filed with the GSBCA or within one day of filing a protest with the GAO.

39. COMMERCIAL AND GOVERNMENT ENTITY (CAGE) CODE REPORTING (DEC 1991) DFARS 252.204-7001

(a) The Offeror is requested to enter its CAGE code on its offer in the block with its name and address. The CAGE code entered must be for that name and address. Enter CAGE before the number.

(b) If the Offeror does not have a CAGE code, it may ask the Contracting Officer to request one from the Defense Logistics Services Center (DLSC). The Contracting Officer will--

(1) Ask the Contractor to complete section B of a DD Form 2051, Request for Assignment of a Commercial and Government Entity (CAGE) Code;

(2) Complete section A and forward the form to DLSC; and

(3) Notify the Contractor of its assigned CAGE code.

(c) Do not delay submission of the offer pending receipt of a CAGE code.

20 March 1997
40. DATA UNIVERSAL NUMBERING SYSTEM (DUNS) NUMBER (APR 1998) FAR 52.204-6.

(a) The offeror shall enter, in the block with its name and address on the cover page of its offer, the annotation “DUNS” followed by the DUNS number that identifies the offeror’s name and address exactly as stated in the offer. The DUNS number is a nine-digit number assigned by Dun and Bradstreet Information Services.

(b) If the offeror does not have a DUNS number, it should contact Dun and Bradstreet directly to obtain one. A DUNS number will be provided immediately by telephone at no charge to the offeror. For information on obtaining a DUNS number, the offeror, if located within the United States, should call Dun and Bradstreet at 1-800-333-0505. The offeror should be prepared to provide the following information:

(1) Company name.
(2) Company address.
(3) Company telephone number.
(4) Line of business.
(5) Chief executive officer/key manager.
(6) Date the company was started.
(7) Number of people employed by the company.
(8) Company affiliation.

(c) Offerors located outside the United States may obtain the location and phone number of the local Dun and Bradstreet Information Services office from the Internet Home Page at hhtp://www.dnb.com/. If an offeror is unable to locate a local service center, it may send an e-mail to Dun and Bradstreet at globalinfo@mail.dnb.com.

41. NOT USED.

20 March 1997
42. NOTICE OF PRIORITY RATING FOR NATIONAL DEFENSE USE (SEP 1990) FAR 52.211-14.

42.1 Any contract awarded as a result of this solicitation will be a [ ] DX rated order; [X] DO-C2 rated order certified for national defense use under the Defense Priorities and Allocations System (DFARS) 15 CFR 700, and the Contractor will be required to follow all of the requirements of this regulation.

43. PRICE BASIS. Prices must be firm. Bids will not be considered which provide for subsequent increase in price.

24 Sep 1998
44. CONTRACT AWARD--SEALED BIDDING--CONSTRUCTION (AUG 1996) FAR 52.214-19.

(a) The Government will evaluate bids in response to this solicitation without discussions and will award a contract to the responsible bidder whose bid, conforming to the solicitation, will be most advantageous to the

Government, considering only price and the price-related factors specified elsewhere in the solicitation.

(b) The Government may reject any or all bids, and waive informalities on minor irregularities in bids received.

(c) The Government may accept any item or combination of items, unless doing so is precluded by a restrictive limitation in the solicitation or the bid.

(d) The Government may reject a bid as nonresponsive if the prices bid are materially unbalanced between line items or subline items. A bid is materially unbalanced when it is based on prices significantly less than cost for some work and prices which are significantly overstated in relation to cost for other work, and if there is a reasonable doubt that the bid will result in the lowest overall cost to the Government even though it may be the low evaluated bid, or if it is so unbalanced as to be tantamount to allowing an advance payment.

24 Sep 1998
45. RESTRICTIVE LIMITATION (Ref. Para. 44.c). Except for Additives and Options, the Government shall accept all items listed in SECTION 00010 of this solicitation.

(2)46. AWARD TO SINGLE BIDDERS. Subject to the provisions contained herein, award shall be made to a single bidder.

47. NOT USED.

20 March 1997
(2)48. EVALUATION OF OPTIONS (JUL 1990) FAR 52.217-5
Except when it is determined in accordance with FAR 17.206(b) not to be in the Government's best interests, the Government will evaluate offers for award purposes by adding the total price for all options to the total price for the basic requirement. Evaluation of options will not obligate the Government to exercise the option(s).

2 Jan 96
49. NOT USED.

LOCATION OF BID OPENING. Bidders are provided the following information as a service by the government. The government cannot be held liable for street closures, traffic delays or other problems that may be encountered due to reliance upon the government's suggested routes to the Federal Building.

Motorist coming from I-65 North:

Immediately after crossing the kennedy bridge, take exit I-64 West (St. Louis). Once in I-64, take the 9th street exit. Continue straight on 9th street for approximately seven blocks to Broadway (first major street with two-way traffic). Turn left on Broadway; go two blocks and turn left on 7th street (7th street is one-way north bound). Approximately ½ block north on 7th street is a stop light, our building is on the right just past the light. There should be ample parking available either by street-side or garage parking. Upon entering the building proceed to the eighth floor and go to room 821.

Motorist coming from I-65 South:

Take Broadway exit and turn left on Broadway (west bound) and continue to 7th street and turn right. Approximately ½ block north on 7th street is a stop light, our building is on the right just past the light. There should be ample parking available either by street-side or garage parking. Upon entering the building proceed to the eighth floor and go to room 821.

Motorist coming from I-64 East and West:

Exit the 9th street exit. At the bottom of the ramp continue south down 9th street for approximately seven blocks until you come to Broadway (first major two way street). Turn left on Broadway and to two blocks and turn left on 7th street (7th street is one-way north bound). Approximately ½ block north on 7th street is a stop light, our building is on the right just past the light. There should be ample parking available either by street-side or garage parking. Upon entering the building proceed to the eighth floor and go to room 821.

Motorist coming from I-71:

Follow routing for intersecting with I-64 and follow the instructions for I-64 motorists.

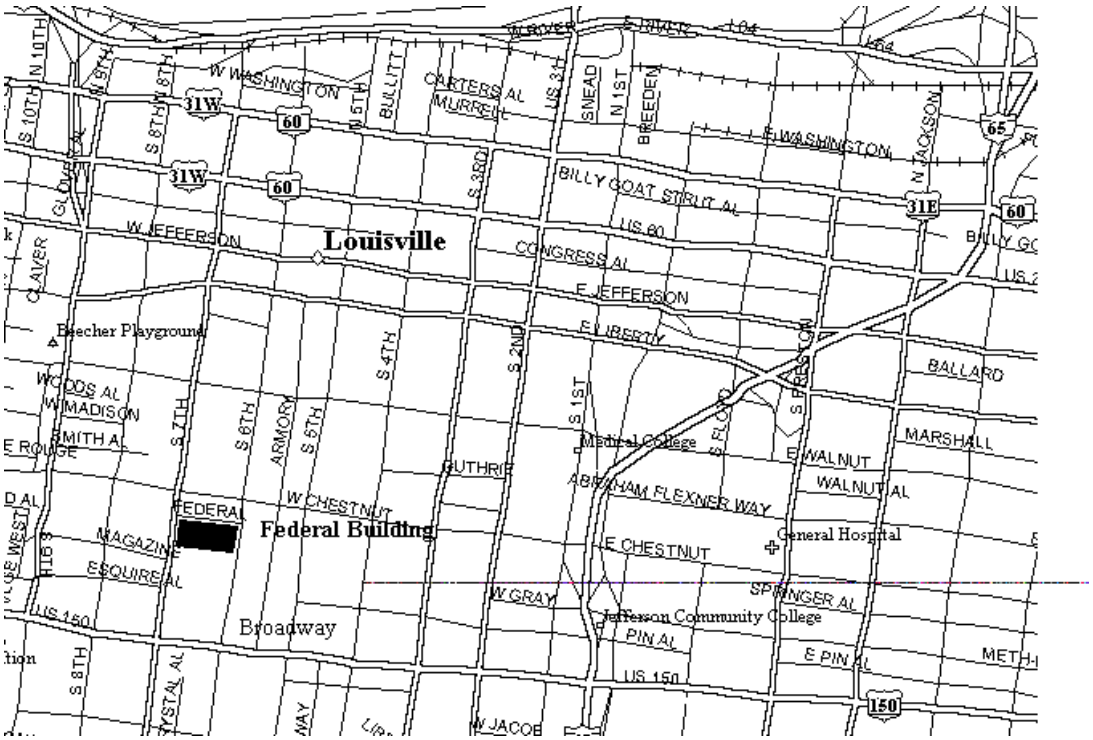

BIDDER: READ CAREFULLY - CHECK ALL APPLICABLE BOXES

SECTION 00605

REPRESENTATIONS, CERTIFICATIONS, AND OTHER STATEMENTS OF BIDDER FOR SEALED BID CONSTRUCTION CONTRACTS

DATE OF OFFER: _____ DUNS NO. _____

SOLICITATION NO. _____ CAGE NO. _____

NAME AND ADDRESS OF OFFEROR: _____

_____

The offeror makes the following representations and certifications as part of the offer referenced above.

1. CERTIFICATE OF INDEPENDENT PRICE DETERMINATION (APR 1985) FAR 52.203-2

(a) The offeror certifies that--

(1) The prices in this offer have been arrived at independently, without, for the purpose of restricting competition, any consultation, communication, or agreement with any other offeror or competitor relating to (i) those prices, (ii) the intention to submit an offer, or (iii) the methods or factors used to calculate the prices offered;

(2) The prices in this offer have not been and will not be knowingly disclosed by the offeror, directly or indirectly, to any other offeror or competitor before bid opening (in the case of a sealed bid solicitation) or contract award (in the case of a negotiated solicitation) unless otherwise required by law; and

(3) No attempt has been made or will be made by the offeror to induce any other concern to submit or not to submit an offer for the purpose of restricting competition.

(b) Each signature on the offer is considered to be a certification by the signatory that the signatory--

(1) Is the person in the offeror's organization responsible for determining the prices being offered in this bid or proposal, and that the signatory has not participated and will not participate in any action contrary to subparagraphs (a)(1) through (a)(3) of this provision; or

(2) (i) Has been authorized, in writing, to act as agent for the following principals in certifying that those principals have not participated, and will not participate in any action contrary to subparagraphs (a)(1) through (a)(3) of this provision _____ [*insert full name of person(s) in the offeror's organization responsible for determining the prices offered in this bid or proposal, and the title of his or her position in the offeror's organization*];

(ii) As an authorized agent, does certify that the principals name in subdivision (b)(2)(i) of this provision have not participated, and will not participate, in any action contrary to subparagraphs (a)(1) through (a)(3) of this provision; and

(iii) As an agent, has not personally participated, and will not participate, in any action contrary to subparagraphs (a)(1) through (a)(3) of this provision.

(c) If the offeror deletes or modifies subparagraph (a)(2) of this provision, the offeror must furnish with its offer a signed statement setting forth in detail the circumstances of the disclosure.

(End of provision)

2. CERTIFICATION AND DISCLOSURE REGARDING PAYMENTS TO INFLUENCE CERTAIN FEDERAL TRANSACTIONS (APR 1991) FAR 52.203-11

(a) The definitions and prohibitions contained in the clause, at FAR 52.203-12, Limitation on Payments to Influence Certain Federal Transactions, included in this solicitation, are hereby incorporated by reference in paragraph (b) of this certification.

(b) The offeror, by signing its offer, hereby certifies to the best of his or her knowledge and belief that on or after December 23, 1989--

(1) No Federal appropriated funds have been paid or will be paid to any person for influencing or attempting to influence an officer or employee of any agency, a Member of Congress, an officer or employee of Congress, or an employee of a Member of Congress on his or her behalf in connection with the awarding of any Federal contract, the making of any Federal grant, the making of any Federal loan, the entering into any cooperative agreement, and the extension, continuation, renewal, amendment or modification of any Federal contract, grant, loan or cooperative agreement;

(2) If any funds other than Federal appropriated funds (including profit or fee received under a covered Federal transaction) have been paid, or will be paid, to any person for influencing or attempting to influence an officer or employee of any agency, a Member of Congress, an officer or employee of Congress, or an employee of a Member of Congress on his or her behalf in connection with this solicitation, the offeror shall complete and submit, with its offer, OMB standard form LLL, Disclosure of Lobbying Activities, to the Contracting Officer; and

(3) He or she will include the language of this certification in all subcontract awards at any tier and require that all recipients of subcontract awards in excess of $100,000 shall certify and disclose accordingly.

(c) Submission of this certification and disclosure is a prerequisite for making or entering into this contract imposed by section 1352, title 31, United States Code. Any person who makes an expenditure prohibited under this provision or who fails to file or amend the disclosure form to be filed or amended by this provision, shall be subject to a civil penalty of not less than $10,000, and not more than $100,000, for each such failure.

(End of Provision)

3. TAXPAYER IDENTIFICATION (OCT 1998) FAR 52.204-3

(a) **Definitions.**

"Common parent," as used in this provision, means that corporate entity that owns or controls an affiliated group of corporations that files its Federal income tax returns on a consolidated basis, and of which the offeror is a member.

"Taxpayer Identification Number (TIN)," as used in this provision, means the number required by the Internal Revenue Service (IRS) to be used by the offeror in reporting income tax and other returns. The TIN may be either a Social Security Number or an Employer Identification Number.

(b) All offerors must submit the information required in paragraphs (d) through (f) of this provision to comply with debt collection requirements of 31 U.S.C. 7701(c) and 3325(d), reporting requirements of 26 U.S.C. 6041, 6041A, and 6050M, and implementing regulations issued by the IRS. If the resulting contract is subject to the payment reporting requirements described in Federal Acquisition Regulation (FAR) 4.904, the failure or refusal by the offeror to furnish the information may result in a 31 percent reduction of payments otherwise due under the contract.

(c) The TIN may be used by the Government to collect and report on any delinquent amounts arising out of the offeror's relationship with the Government (31 U.S.C. 7701(c)(3)). If the resulting contract is subject to the payment reporting requirements described in FAR 4.904, the TIN provided hereunder may be matched with IRS records to verify the accuracy of the offeror's TIN.

(d) **Taxpayer Identification Number (TIN).**

[ ] TIN: _____
[ ] TIN has been applied for.
[ ] TIN is not required because:
  [ ] Offeror is a nonresident alien, foreign corporation, or foreign partnership that does not have income effectively connected with the conduct of a trade or business in the United States and does not have an office or place of business or a fiscal paying agent in the United States;
  [ ] Offeror is an agency or instrumentality of a foreign government;
  [ ] Offeror is an agency or instrumentality the Federal Government;

(e) **Type of Organization.**

[ ] Sole proprietorship;
[ ] Partnership;
[ ] Corporate entity (not tax-exempt);
[ ] Corporate entity (tax-exempt);
[ ] Government entity (Federal, State, or local);
[ ] Foreign government;
[ ] International organization per 26 CFR 1.6049-4;
[ ] Other _____

(f) **Common Parent.**

[ ] Offeror is not owned or controlled by a common parent as defined in paragraph (a) of this provision.
[ ] Name and TIN of common parent:

Name _____ TIN_____

(End of provision)

4. WOMEN-OWNED BUSINESS (OCT 1995) FAR 52.204-5

(a) **Representation.** The offeror represents that it **[ ]** is, **[ ]** is not a women-owned business concern.

(b) **Definition.** "Women-owned business concern," as used in this provision, means a concern which is at least 51 percent owned by one or more women; or in the case of any publicly owned business, at least 51 percent of the stock of which is owned by one or more women; and whose management and daily business operations are controlled by one or more women.

(End of provision)

5. CERTIFICATION REGARDING DEBARMENT, SUSPENSION, PROPOSED DEBARMENT, AND OTHER RESPONSIBILITY MATTERS (MAR 1996) FAR 52.209-5

(a) (1) The Offeror certifies, to the best of its knowledge and belief, that--

(i) The Offeror and/or any of its Principals--

(A) Are **[ ]** are not **[ ]** presently debarred, suspended, proposed for debarment, or declared ineligible for the award of contracts by any Federal agency;

(B) Have **[ ]** have not **[ ]**, within a three-year period preceding this offer, been convicted of or had a civil judgment rendered against them for: commission of fraud or a criminal offense in connection with obtaining, attempting to obtain, or performing a public (Federal, state, or local) contract or subcontract; violation of Federal or state antitrust statutes relating to the submission of offers; or commission of embezzlement, theft, forgery, bribery, falsification or destruction of records, making false statements, tax evasion, or receiving stolen property; and

(C) Are **[ ]** are not **[ ]** presently indicted for, or otherwise criminally or civilly charged by a governmental entity with, commission of any of the offenses enumerated in subdivision (a)(1)(i)(B) of this provision.

(ii) The Offeror has **[ ]** has not **[ ]**, within a three-year period preceding this offer, had one or more contracts terminated for default by any Federal agency.

(2) "Principals," for the purposes of this certification, means officers; directors; owners; partners; and, persons having primary management or supervisory responsibilities within a business entity (e.g., general manager; plant manager; head of a subsidiary, division, or business segment, and similar positions).

THIS CERTIFICATION CONCERNS A MATTER WITHIN THE JURISDICTION OF AN AGENCY OF THE UNITED STATES AND THE MAKING OF A FALSE, FICTITIOUS, OR FRAUDULENT CERTIFICATION MAY RENDER THE MAKER SUBJECT TO PROSECUTION UNDER SECTION 1001, TITLE 18, UNITED STATES CODE.

(b) The Offeror shall provide immediate written notice to the Contracting Officer if, at any time prior to contract award, the Offeror learns that its certification was erroneous when submitted or has become erroneous by reason of changed circumstances.

(c) A certification that any of the items in paragraph (a) of this provision exists will not necessarily result in withholding of an award under this solicitation. However, the certification will be considered in connection with a determination of the Offeror's responsibility. Failure of the Offeror to furnish a certification or provide such additional information as requested by the Contracting Officer may render the Offeror nonresponsible.

(d) Nothing contained in the foregoing shall be construed to require establishment of a system of records in order to render, in good faith, the certification required by paragraph (a) of this provision. The knowledge and information of an Offeror is not required to exceed that which is normally possessed by a prudent person in the ordinary course of business dealings.

(e) The certification in paragraph (a) of this provision is a material representation of fact upon which reliance was placed when making award. If it is later determined that the Offeror knowingly rendered an erroneous certification, in addition to other remedies available to the Government, the Contracting Officer may terminate the contract resulting from this solicitation for default.

(End of provision)

6. DISCLOSURE OF OWNERSHIP OR CONTROL BY THE GOVERNMENT OF A TERRORIST COUNTRY (SEP 1994) DFARS 252.209-7001

(a) **Definitions.**

As used in this provision--

(1) "Government of a terrorist country" includes the state and the government of a terrorist country, as well as any political subdivision, agency, or instrumentality thereof.

(2) "Terrorist country" means a country determined by the Secretary of State, under section 6(j)(1)(A) of the Export Administration Act of 1979 (50 U.S.C. App. 2405 (j)(i)(A)), to be a country the government of which has repeatedly provided support for acts of international terrorism. As of the date of this provision, terrorist countries include: Cuba, Iran, Iraq, Libya, North Korea, Sudan, and Syria.

(3) "Significant interest" means--

(i) Ownership of or beneficial interest in 5 percent or more of the firm's or subsidiary's securities. Beneficial interest includes holding 5 percent or more of any class of the firm's securities in "nominee shares," "street names," or some other method of holding securities that does not disclose the beneficial owner;

(ii) Holding a management position in the firm, such as a director or officer;

(iii) Ability to control or influence the election, appointment, or tenure of directors or officers in the firm;

(iv) Ownership of 10 percent or more of the assets of a firm such as equipment, buildings, real estate, or other tangible assets of the firm; or

(v) Holding 50 percent or more of the indebtedness of a firm.

(b) **Prohibition on award.** In accordance with 10 U.S.C. 2327, no contract may be awarded to a firm or a subsidiary of a firm if the government of a terrorist country has a significant interest in the firm or subsidiary, unless a waiver is granted by the Secretary of Defense.

(c) **Disclosure.** If the government of a terrorist country has a significant interest in the Offeror or a subsidiary of the Offeror, the Offeror shall disclose such interest in an attachment to its offer. If the Offeror is a subsidiary, it shall also disclose any significant interest the government of a terrorist country has in any firm that owns or controls the subsidiary. The disclosure shall include--

(1) Identification of each government holding a significant interest; and

(2) A description of the significant interest held by each government.

(End of provision)

7. COMPLIANCE WITH VETERANS' EMPLOYMENT REPORTING REQUIREMENTS (MAR 1998) DFARS 52.209-7003

By submission of its offer, the offeror represents that, if it is subject to the reporting requirements of 38 U.S.C. 4212(d) (i.e., the VETS-100 report required by Federal Acquisition Regulation clause 52.222-37, Employment Reports on Disabled Veterans and Veterans of the Vietnam Era), it has submitted the most recent report required by 38 U.S.C. 4212(d).

(End of provision)

8. SMALL BUSINESS PROGRAM REPRESENTATIONS (OCT 1998) FAR 52.219-1 (ALTERNATE I) (OCT 1998)

(a) (1) The standard industrial classification (SIC) code for this acquisition is 1542.

(2) The small business size standard is $17 million.

(3) The small business size standard for a concern which submits an offer in its own name, other than on a construction or service contract, but which proposes to furnish a product which it did not itself manufacture, is 500 employees.

(b) **Representations.** (1) The offeror represents as part of its offer that it **[ ]** is, **[ ]** is not a small business concern.

(2) (Complete only if offeror represented itself as a small business concern in paragraph (b)(1) of this provision.) The offeror represents, for general statistical purposes, that it **[ ]** is, **[ ]** is not a small disadvantaged business concern as defined in 13 CFR 124.1002.

(3) (Complete only if offeror represented itself as a small business concern in paragraph (b)(1) of this provision.) The offeror represents as part of its offer that it **[ ]** is **[ ]** is not a women-owned small business concern.

(4) (Complete if offeror represented itself as disadvantaged in paragraph (b)(2) of this provision). [The offeror shall check the category in which its ownership falls];

_____ Black American

_____ Hispanic American

_____ Native American (American Indians, Eskimos, Aleuts, or Native Hawaiians).

_____ Asian-Pacific American (persons with origins from Burma, Thailand, Malaysia, Indonesia, Singapore, Brunei, Japan, China, Taiwan, Laos, Cambodia (Kampuchea), Vietnam, Korea, The Philippines, U.S. Trust Territory of the Pacific Islands (Republic of Palau), Republic of the Marshall Islands, Federated States of Micronesia, the Commonwealth of the Northern Mariana Islands, Guam, Samoa, Macao, Hong Kong, Fiji, Tonga, Kiribati, Tuvalu, or Nauru).

_____ Subcontinent Asian (Asian-Indian) American (persons with origins from India, Pakistan, Bangladesh, Sri Lanka, Bhutan, the Maldives Islands, or Nepal).

_____ Individual/concern, other than one of the preceding.

(c) **Definitions.**

"Small business concern," as used in this provision, means a concern, including its affiliates, that is independently owned and operated, not dominant in the field of operation in which it is bidding on Government contracts, and qualified as a small business under the criteria in 13 CFR Part 121 and the size standard in paragraph (a) of this provision.

"Woman-owned small business concern," as used in this provision, means a small business concern--

(1) Which is at least 51 percent owned by one or more women or, in the case of any publicly owned business, at least 51 percent of the stock of which is owned by one or more women; and

(2) Whose management and daily business operations are controlled by one or more women.

(d) **Notice.** (1) If this solicitation is for supplies and has been set aside, in whole or in part, for small business concerns, then the clause in this solicitation providing notice of the set-aside contains restrictions on the source of the end items to be furnished.

(2) Under 15 U.S.C. 645(d), any person who misrepresents a firm's status as a small or small disadvantaged business concern in order to obtain a contract to be awarded under the preference programs

established pursuant to sections 8(a), 8(d), 9, or 15 of the Small Business Act or any other provision of Federal law that specifically references section 8(d) for a definition of program eligibility, shall--

(i) Be punished by imposition of fine, imprisonment, or both;

(ii) Be subject to administrative remedies, including suspension and debarment; and

(iii) Be ineligible for participation in programs conducted under the authority of the Act.

(End of provision)

9. EQUAL LOW BIDS (OCT 1995) FAR 52.219-2

(a) This provision applies to small business concerns only.

(b) The bidder's status as a labor surplus area (LSA) concern may affect entitlement to award in case of tie bids. If the bidder wishes to be considered for this priority, the bidder must identify, in the following space, the LSA in which the costs to be incurred on account of manufacturing or production (by the bidder or the first-tier subcontractors) amount to more than 50 percent of the contract price.

_____ _____

_____ _____

(c) Failure to identify the labor surplus areas as specified in paragraph (b) of this provision will preclude the bidder from receiving priority consideration. If the bidder is awarded a contract as a result of receiving priority consideration under this provision and would not have otherwise received award, the bidder shall perform the contract or cause the contract to be performed in accordance with the obligations of an LSA concern.

(End of provision)

10. SMALL BUSINESS CONCERN REPRESENTATION FOR THE SMALL BUSINESS COMPETITIVENESS DEMONSTRATION PROGRAM (JAN 1997) FAR 52.219-19

(a) **Definition.** "Emerging small business" as used in this solicitation, means a small business concern whose size is no greater than 50 percent of the numerical size standard applicable to the standard industrial classification code assigned to a contracting opportunity.

(b) **(Complete only if the Offeror has represented itself under the provision at 52.219-1 as a small business concern under the size standards of this solicitation.)** The Offeror **[ ]** is, **[ ]** is not an emerging small business.

(c) **(Complete only if the Offeror is a small business or an emerging small business, indicating its size range.)** Offeror's number of employees for the past 12 months (check this column if size standard stated in solicitation is expressed in terms of number of employees) or Offeror's average annual gross revenue for the last 3 fiscal years (check this column if size standard stated in solicitation is expressed in terms of annual receipts - see paragraph 11(a) (2) Small Business Program Representations).

(Construction Solicitations)

Number of Employees	Avg. Annual Gross Revenues
_____ 50 or fewer	_____ $1 million or less
_____ 51 - 100	_____ $1,000,001 - $2 million
_____ 101 -250	_____ $2,000,001 - $3.5 million
_____ 251 - 500	_____ $3,500,001 - $5 million
_____ 501 - 750	_____ $5,000,001 - $10 million
_____ 751 - 1,000	_____ $10,000,001 - $17 million
_____ Over 1,000	_____ Over $17 million

(End of provision)

11. PREVIOUS CONTRACTS AND COMPLIANCE REPORTS (FEB 1999) FAR 52.222-22

The offeror represents that--

(a) It **[ ]** has **[ ]** has not, participated in a previous contract or subcontract subject to the Equal Opportunity clause of this solicitation;

(b) It **[ ]** has, **[ ]** has not, filed all required compliance reports; and

(c) Representations indicating submission of required compliance reports, signed by proposed subcontractors, will be obtained before subcontract awards.

(End of Provision)

12. CLEAN AIR AND WATER CERTIFICATION (APR 1984) FAR 52.223-1

The Offeror certifies that--

(a) Any facility to be used in the performance of this proposed contract **[ ]** is, **[ ]** is not listed on the Environmental Protection Agency (EPA) List of Violating Facilities;

(b) The Offeror will immediately notify the Contracting Officer, before award, of the receipt of any communication from the Administrator, or a designee, of the EPA, indicating that any facility that the Offeror proposes to use for the performance of the contract is under consideration to be listed on the EPA List of Violating Facilities; and

(c) The Offeror will include a certification substantially the same as this certification, including this paragraph (c), in every nonexempt subcontract.

(End of Provision)

13. CERTIFICATION OF TOXIC CHEMICAL RELEASE REPORTING (OCT 1996) FAR 52.223-13

(a) Submission of this certification is a prerequisite for making or entering into this contract imposed by Executive Order 12969, August 8,1995.

(b) By signing this offer, the offeror certifies that--

(1) As the owner or operator of facilities that will be used in the performance of this contract that are subject to the filing and reporting requirements described in section 313 of the Emergency Planning and Community Right-to-Know Act of 1986 (EPCRA) (42 U.S.C. 11023) and section 6607 of the Pollution Prevention Act of 1990 (PPA) (42 U.S.C. 13106), the offeror will file and continue to file for such facilities for the life of the contract the Toxic Chemical Release Inventory Form (Form R) as described in sections 313(a) and (g) of EPCRA and section 6607 of PPA; or

(2) None of its owned or operated facilities to be used in the performance of this contract is subject to the Form R filing and reporting requirements because each such facilities is exempt for at least one of the following reasons: *(Check each block that is applicable.)*

[ ] (i) The facility does not manufacture, process or otherwise use any toxic chemicals listed under section 313(c) of EPCRA, 42 U.S.C. 11023(c);

[ ] (ii) The facility does not have 10 or more full-time employees as specified in section 313(b)(1)(A) of EPCRA, 42 U.S.C. 11023(b)(1)(A);

[ ] (iii) The facility does not meet the reporting thresholds of toxic chemicals established under section 313(f) of EPCRA, 42 U.S.C. 11023(f) (including the alternate thresholds at 40 CFR 372.27, provided an appropriate certification form has been filed with EPA);

[ ] (iv) The facility does not fall within the Standard Industrial Classification Code (SIC) designations 20 through 39 as set forth in section 19.102 of the Federal Acquisition Regulation; or

[ ] (v) The facility is not located within any State of the United States, the District of Columbia, the Commonwealth of Puerto Rico, Guam, American Samoa, the United States Virgin Islands, the Northern Mariana Islands, or any other territory or possession over which the United States has jurisdiction.

(End of provision)

(End of Section 00605)

SECTION 00700

INDEX OF CONTRACT CLAUSES (CONSTRUCTION)
Issued by: Department of the Army, Corps of Engineers
Louisville District

Edition of 16 FEBRUARY 1999

TABLE OF CONTENTS

1 CONTRACTING OFFICER'S REPRESENTATIVE (DEC 1991) DFARS 252.201-7000

2 DEFINITIONS (OCT 1995)--ALTERNATE I (APR 1984) FAR 52.202-1 I

3 GRATUITIES (APR 1984) FAR 52.203-3

4 COVENANT AGAINST CONTINGENT FEES (APR 1984) FAR 52.203-5

5 ANTI-KICKBACK PROCEDURES (JUL 1995) FAR 52.203-7

6 CANCELLATION, RESCISSION, AND RECOVERY OF FUNDS FOR ILLEGAL OR IMPROPER ACTIVITY (JAN 1997) FAR 52.203-8

7 PRICE OR FEE ADJUSTMENT FOR ILLEGAL OR IMPROPER ACTIVITY (JAN 1997) FAR 52.203-10

8 LIMITATION ON PAYMENTS TO INFLUENCE CERTAIN FEDERAL TRANSACTIONS (JUN 1997) FAR 52.203-12

9 SPECIAL PROHIBITION ON EMPLOYMENT (JUN 1997) DFARS 252.203-7001

10 DISPLAY OF DOD HOTLINE POSTER (DEC 1991) DFARS 252.203-7002

11 PRINTING/COPYING DOUBLE-SIDED ON RECYCLED PAPER (JUN 1996) FAR 52.204-4

12 REQUIRED CENTRAL CONTRACTOR REGISTRATION (MAR 1998) DFARS 252.204-7004

13 PROVISION OF INFORMATION TO COOPERATIVE AGREEMENT HOLDERS (DEC 1991) DFARS 252.205-7000

14 PROTECTING THE GOVERNMENT'S INTEREST WHEN SUBCONTRACTING WITH CONTRACTORS DEBARRED, SUSPENDED, OR PROPOSED FOR DEBARMENT (JUL 1995) FAR 52.209-6

15 DEFENSE PRIORITY AND ALLOCATION REQUIREMENTS (SEP 1990) FAR 211-15

16 VARIATION IN ESTIMATED QUANTITY (APR 1984) FAR 52.211-18

17 AUDIT AND RECORDS--SEALED BIDDING (OCT 1997) FAR 52.214-26

18 PRICE REDUCTION FOR DEFECTIVE COST OR PRICING DATA--MODIFICATIONS--SEALED BIDDING (OCT 1997) FAR 52.214-27

19 SUBCONTRACTOR COST OR PRICING DATA--MODIFICATIONS --SEALED BIDDING (OCT 1997) FAR 52.214-28

20 **AUDIT AND RECORDS--NEGOTIATION (AUG 1996) FAR 52.215-2**

21 **PRICE REDUCTION FOR DEFECTIVE COST OR PRICING DATA (OCT 1997) FAR 52.215-10**

22 **SUBCONTRACTOR COST OR PRICING DATA (OCT 1997) FAR 52.215-12**

23 **PENSION ADJUSTMENTS AND ASSET REVERSIONS (DEC 1998) FAR 52.215-15**

24 **REVERSION OR ADJUSTMENT OF PLANS FOR POSTRETIREMENT BENEFITS (PRB) OTHER THAN PENSIONS (OCT 1997) FAR 52.215-18**

25 **NOTIFICATION OF OWNERSHIP CHANGES (OCT 1997) FAR 52.215-19**

26 **PRICING ADJUSTMENTS (DEC 1991) DFARS 252.215-7000**

27 **UTILIZATION SMALL BUSINESS CONCERNS (JAN 1999) FAR 52.219-8**

28 **SMALL BUSINESS SUBCONTRACTING PLAN (JAN 1999) FAR 52.219-9**

29 **SMALL BUSINESS SUBCONTRACTING PLAN (JAN 1999) ALTERNATE I (JAN 1999) FAR 52.219-9 I**

30 **SMALL BUSINESS SUBCONTRACTING PLAN (JAN 1999) ALTERNATE II (JAN 1999) FAR 52.219-9 II**

31 **LIMITATIONS ON SUBCONTRACTING (DEC 1996) FAR 52.219-14**

32 **LIQUIDATED DAMAGES--SUBCONTRACTING PLAN (JAN 1999) FAR 52.219-16**

33 **SMALL, SMALL DISADVANTAGED AND WOMEN-OWNED SMALL BUSINESS SUBCONTRACTING PLAN (DOD CONTRACTS) (APR 1996) DFARS 252.219-7003**

34 **NOTICE TO THE GOVERNMENT OF LABOR DISPUTES (FEB 1997) FAR 52.222-1**

35 **CONVICT LABOR (AUG 1996) FAR 52.222-3**

36 **CONTRACT WORK HOURS AND SAFETY STANDARDS ACT--OVERTIME COMPENSATION (JUL 1995) FAR 52.222-4**

37 **DAVIS-BACON ACT (FEB 1995) FAR 52.222-6**

38 **WITHHOLDING OF FUNDS (FEB 1988) FAR 52.222-7**

39 **PAYROLLS AND BASIC RECORDS (FEB 1988) FAR 52.222-8**

40 **APPRENTICES AND TRAINEES (FEB 1988) FAR 52.222-9**

41 **COMPLIANCE WITH COPELAND ACT REQUIREMENTS (FEB 1988) FAR 52.222-10**

42 **SUBCONTRACTS (LABOR STANDARDS) (FEB 1988) FAR 52.222-11**

43 **CONTRACT TERMINATION--DEBARMENT (FEB 1988) FAR 52.222-12**

44 **COMPLIANCE WITH DAVIS-BACON AND RELATED ACT REGULATIONS (FEB 1988) FAR 52.222-13**

45 DISPUTES CONCERNING LABOR STANDARDS (FEB 1988) FAR 52.222-14

46 CERTIFICATION OF ELIGIBILITY (FEB 1988) FAR 52.222-15

47 PROHIBITION OF SEGREGATED FACILITIES (FEB 1999) FAR 52.222-21

48 EQUAL OPPORTUNITY (FEB 1999) FAR 52.222-26

49 AFFIRMATIVE ACTION COMPLIANCE REQUIREMENTS FOR CONSTRUCTION (FEB 1999) FAR 52.222-27

50 AFFIRMATIVE ACTION FOR DISABLED VETERANS AND VETERANS OF THE VIETNAM ERA (APR 1998) FAR 52.222-35

51 AFFIRMATIVE ACTION FOR WORKERS WITH DISABILITIES (JUN 1998) FAR 52.222-36

52 EMPLOYMENT REPORTS ON DISABLED VETERANS AND VETERANS OF THE VIETNAM ERA (JAN 1999) FAR 52.222-37

53 CLEAN AIR AND WATER (APR 1984) FAR 52.223-2

54 POLLUTION PREVENTION AND RIGHT-TO-KNOW INFORMATION (APR 1998) FAR 52.223-5

55 DRUG-FREE WORKPLACE (JAN 1997) FAR 52.223-6

56 OZONE-DEPLETING SUBSTANCES (JUN 1996) FAR 52.223-11

57 TOXIC CHEMICAL RELEASE REPORTING (OCT 1996) FAR 52.223-14

58 BUY-AMERICAN ACT--CONSTRUCTION MATERIALS (JUN 1997) FAR 52.225-5

59 RESTRICTIONS ON CERTAIN FOREIGN PURCHASES (AUG 1998) FAR 52.225-11

60 BUY AMERICAN ACT--CONSTRUCTION MATERIALS UNDER EUROPEAN COMMUNITY AND NORTH AMERICAN FREE TRADE AGREEMENTS (JUN 1997) FAR 52.225-15

61 BUY AMERICAN ACT--CONSTRUCTION MATERIALS UNDER EUROPEAN COMMUNITY AND NORTH AMERICAN FREE TRADE AGREEMENTS (JUN 1997) ALTERNATE I (MAY 1997) FAR 52.225-15 I

62 SECONDARY ARAB BOYCOTT OF ISRAEL (JUN 1992) DFARS 252.225-7031

63 UTILIZATION OF INDIAN ORGANIZATIONS AND INDIAN-OWNED ECONOMIC ENTERPRISES (JAN 1999) FAR 52.226-1

64 AUTHORIZATION AND CONSENT (JUL 1995) FAR 52.227-1

65 PATENT INDEMNITY--CONSTRUCTION CONTRACTS (APR 1984) FAR 52.227-4

66 RIGHTS IN SHOP DRAWINGS (APR 1966) DFARS 252.227-7033

67 ADDITIONAL BOND SECURITY (OCT 1997) FAR 52.228-2

68 INSURANCE--WORK ON A GOVERNMENT INSTALLATION (JAN 1997) FAR 52.228-5

69 PLEDGES OF ASSETS (FEB 1992) FAR 52.228-11

70 PROSPECTIVE SUBCONTRACTOR REQUESTS FOR BONDS (OCT 1995) FAR 52.228-12

71 FEDERAL, STATE, AND LOCAL TAXES (JAN 1991) FAR 52.229-3

72 SUPPLEMENTAL COST PRINCIPLES (DEC 1991) DFARS 252.231-7000

73 PAYMENTS UNDER FIXED-PRICE CONSTRUCTION CONTRACTS (MAY 1997) FAR 52.232-5

74 INTEREST (JUN 1996) FAR 52.232-17

75 ASSIGNMENT OF CLAIMS (JAN 1986) ALTERNATE I (APR 1984) FAR 52.232-23 I

76 PROMPT PAYMENT FOR CONSTRUCTION CONTRACTS (JUN 1997) FAR 52.232-27

77 PAYMENT BY ELECTRONIC FUNDS TRANSFER (CCR) (JUN 1998) DFARS 252.232-7009

78 DISPUTES (DEC 1998) FAR 52.233-1

79 PROTEST AFTER AWARD (AUG 1996) FAR 52.233-3

80 DIFFERING SITE CONDITIONS (APR 1984) FAR 52.236-2

81 SITE INVESTIGATION AND CONDITIONS AFFECTING THE WORK (APR 1984) FAR 52.236-3

82 MATERIAL AND WORKMANSHIP (APR 1984) FAR 52.236-5

83 SUPERINTENDENCE BY THE CONTRACTOR (APR 1984) FAR 52.236-6

84 PERMITS AND RESPONSIBILITIES (NOV 1991) FAR 52.236-7

85 OTHER CONTRACTS (APR 1984) FAR 52.236-8

86 PROTECTION OF EXISTING VEGETATION, STRUCTURES, EQUIPMENT, UTILITIES, AND IMPROVEMENTS (APR 1984) FAR 52.236-9

87 OPERATIONS AND STORAGE AREAS (APR 1984) FAR 52.236-10

88 USE AND POSSESSION PRIOR TO COMPLETION (APR 1984) FAR 52.236-11

89 CLEANING UP (APR 1984) FAR 52.236-12

90 ACCIDENT PREVENTION (NOV 1991)--ALTERNATE I (NOV 1991) FAR 52.236-13 I

91 SCHEDULES FOR CONSTRUCTION CONTRACTS (APR 1984) FAR 52.236-15

92 SPECIFICATIONS AND DRAWINGS FOR CONSTRUCTION (FEB 1997) FAR 52.236-21

93 PRECONSTRUCTION CONFERENCE (FEB 1995) FAR 52.236-26

94 MODIFICATION PROPOSALS--PRICE BREAKDOWN (DEC 1991) DFARS 252.236-7000

95 BANKRUPTCY (JUL 1995) FAR 52.242-13

96 SUSPENSION OF WORK (APR 1984) FAR 52.242-14

97 POSTAWARD CONFERENCE (DEC 1991) DFARS 252.242-7000

98 CHANGES (AUG 1987) FAR 52.243-4

99 PRICING OF CONTRACT MODIFICATIONS (DEC 1991) DFARS 252.243-7001

100 REQUESTS FOR EQUITABLE ADJUSTMENT (MAR 1998) DFARS 252.243-7002

101 GOVERNMENT PROPERTY (FIXED-PRICE CONTRACTS) (DEC 1989) FAR 52.245-2

102 GOVERNMENT-FURNISHED PROPERTY (SHORT FORM) (APR 1984) FAR 52.245-4

103 REPORTS OF GOVERNMENT PROPERTY (MAY 1994) DFARS 252.245-7001

104 INSPECTION OF CONSTRUCTION (AUG 1996) FAR 52.246-12

105 VALUE ENGINEERING--CONSTRUCTION (MAR 1989) ALTERNATE I (APR 1984) FAR 52.248-3 I

106 TERMINATION FOR CONVENIENCE OF THE GOVERNMENT (FIXED-PRICE) (SEP 1996)--ALTERNATE I (SEP 1996) FAR 52.249-2 I

107 DEFAULT (FIXED-PRICE CONSTRUCTION) (APR 1984) FAR 52.249-10

108 COMPUTER GENERATED FORMS (JAN 1991) FAR 52.253-1

1. CONTRACTING OFFICER'S REPRESENTATIVE (DEC 1991) DFARS 252.201-7000

(a) *Definition*. "Contracting officer's representative" means an individual designated in accordance with subsection 201.602-2 of the Defense Federal Acquisition Regulation Supplement and authorized in writing by the Contracting Officer to perform specific technical or administrative functions.

(b) If the Contracting Officer designates a Contracting Officer's Representative (COR), the Contractor will receive a copy of the written designation. It will specify the extent of the COR's authority to act on behalf of the Contracting Officer. The COR is not authorized to make any commitments or changes that will affect price, quality, quantity, delivery, or any other term or condition of the contract.

(End of clause)

2. DEFINITIONS (OCT 1995)--ALTERNATE I (APR 1984) FAR 52.202-1 I

(a) "Head of the agency" (also called "agency head") or "Secretary" means the Secretary (or Attorney General, Administrator, Governor, Chairperson, or other chief official, as appropriate) of the agency, including any deputy or assistant chief official of the agency; and the term "authorized representative" means any person, persons, or board (other than the Contracting Officer) authorized to act for the head of the agency or Secretary.

(b) "Commercial component" means any component that is a commercial item.

(c) "Component" means any item supplied to the Federal Government as part of an end item or of another component.

(d) "Nondevelopmental item" means--

(1) Any previously developed item of supply used exclusively for governmental purposes by a Federal agency, a State or local government, or a foreign government with which the United States has a mutual defense cooperation agreement;

(2) Any item described in paragraph (d)(1) of this definition that requires only minor modification or modifications of a type customarily available in the commercial marketplace in order to meet the requirements of the procuring department or agency; or

(3) Any item of supply being produced that does not meet the requirements of paragraph (d)(1) or (d)(2) solely because the item is not yet in use.

(e) "Contracting Officer" means a person with the authority to enter into, administer, and/or terminate contracts and make related determinations and findings. The term includes certain authorized representatives of the Contracting Officer acting within the limits of their authority as delegated by the Contracting Officer.

(f) Except as otherwise provided in this contract, the term "subcontracts" includes, but is not limited to, purchase orders and changes and modifications to purchase orders under this contract.

(End of clause)

3. GRATUITIES (APR 1984) FAR 52.203-3

(a) The right of the Contractor to proceed may be terminated by written notice if, after notice and hearing, the agency head or a designee determines that the Contractor, its agent, or another representative--

(1) Offered or gave a gratuity (e.g., an entertainment or gift) to an officer, official, or employee of the Government; and

(2) Intended, by the gratuity, to obtain a contract or favorable treatment under a contract.

(b) The facts supporting this determination may be reviewed by any court having lawful jurisdiction.

(c) If this contract is terminated under paragraph (a) of this clause, the Government is entitled--

(1) To pursue the same remedies as in a breach of the contract; and

(2) In addition to any other damages provided by law, to exemplary damages of not less than 3 nor more than 10 times the cost incurred by the Contractor in giving gratuities to the person concerned, as determined by the agency head or a designee. (This subparagraph (c)(2) is applicable only if this contract uses money appropriated to the Department of Defense.)

(d) The rights and remedies of the Government provided in this clause shall not be exclusive and are in addition to any other rights and remedies provided by law or under this contract.

(End of clause)

4. COVENANT AGAINST CONTINGENT FEES (APR 1984) FAR 52.203-5

(a) The Contractor warrants that no person or agency has been employed or retained to solicit or obtain this contract upon an agreement or understanding for a contingent fee, except a bona fide employee or agency. For breach or violation of this warranty, the Government shall have the right to annual this contract without liability or, in its discretion, to deduct from the contract price or consideration, or otherwise recover, the full amount of the contingent fee.

(b) "Bona fide agency," as used in this clause, means an established commercial or selling agency, maintained by a contractor for the purpose of securing business, that neither exerts nor proposes to exert improper influence to solicit or obtain Government contracts nor holds itself out as being able to obtain any Government contract or contracts through improper influence.

"Bona fide employee," as used in this clause, means a person, employed by a contractor and subject to the contractor's supervision and control as to time, place, and manner of performance, who neither exerts nor proposes to exert improper influence to solicit or obtain Government contracts nor holds out as being able to obtain any Government contract or contracts through improper influence.

"Contingent fee," as used in this clause, means any commission, percentage, brokerage, or other fee that is contingent upon the success that a person or concern has in securing a Government contract.

"Improper influence," as used in this clause, means any influence that induces or tends to induce a Government employee or officer to give consideration or to act regarding a Government contract or any basis other than the merits of the matter.

(End of clause)

5. ANTI-KICKBACK PROCEDURES (JUL 1995) FAR 52.203-7

(a) *Definitions*.

"Kickback," as used in this clause, means any money, fee, commission, credit, gift, gratuity, thing of value, or compensation of any kind which is provided, directly or indirectly, to any prime Contractor, prime Contractor employee, subcontractor, or subcontractor employee for the purpose of improperly obtaining or rewarding favorable treatment in connection with a prime contract or in connection with a subcontract relating to a prime contract.

"Person," as used in this clause, means a corporation, partnership, business association of any kind, trust, joint-stock company, or individual.

"Prime contract," as used in this clause, means a contract or contractual action entered into by the United States for the purpose of obtaining supplies, materials, equipment or services of any kind.

"Prime Contractor" as used in this clause, means a person who has entered into a prime contract with the United States.

"Prime Contractor employee," as used in this clause, means any officer, partner, employee, or agent of a prime Contractor.

"Subcontract," as used in this clause, means a contract or contractual action entered into by a prime Contractor or subcontractor for the purpose of obtaining supplies, materials, equipment, or services of any kind under a prime contract.

"Subcontractor," as used in this clause, (1) means any person, other than the prime Contractor, who offers to furnish or furnishes any supplies, materials, equipment, or services of any kind under a prime contract or a subcontract entered into in connection with such prime contract, and (2) includes any person who offers to furnish or furnishes general supplies to the prime Contractor or a higher tier subcontractor.

"Subcontractor employee," as used in this clause, means any officer, partner, employee, or agent of a subcontractor.

(b) The Anti-Kickback Act of 1986 (41 U.S.C. 51-58) (the Act), prohibits any person from--

(1) Providing or attempting to provide or offering to provide any kickback;

(2) Soliciting, accepting, or attempting to accept any kickback; or

(3) Including, directly or indirectly, the amount of any kickback in the contract price charged by a prime Contractor to the United States or in the contract price charged by a subcontractor to a prime Contractor or higher tier subcontractor.

(c)(1) The Contractor shall have in place and follow reasonable procedures designed to prevent and detect possible violations described in paragraph (b) of this clause in its own operations and direct business relationships.

(2) When the Contractor has reasonable grounds to believe that a violation described in paragraph (b) of this clause may have occurred, the Contractor shall promptly report in writing the possible violation. Such reports shall be made to the inspector general of the contracting agency, the head of the contracting agency if the agency does not have an inspector general, or the Department of Justice.

(3) The Contractor shall cooperate fully with any Federal agency investigating a possible violation described in paragraph (b) of this clause.

(4) The Contracting Officer may (i) offset the amount of the kickback against any monies owed by the United States under the prime contract and/or (ii) direct that the Prime Contractor withhold from sums owed a subcontractor under the prime contract the amount of the kickback. The Contracting Officer may order that monies withheld under subdivision (c)(4)(ii) of this clause be paid to the Government unless the Government has already offset those monies under subdivision (c)(4)(i) of this clause. In either case, the Prime Contractor shall notify the Contracting Officer when the monies are withheld.

(5) The Contractor agrees to incorporate the substance of this clause, including subparagraph (c)(5) but excepting subparagraph (c)(1), in all subcontracts under this contract which exceed $100,000.

(End of clause)

6. CANCELLATION, RESCISSION, AND RECOVERY OF FUNDS FOR ILLEGAL OR IMPROPER ACTIVITY (JAN 1997) FAR 52.203-8

(a) If the Government receives information that a contractor or a person has engaged in conduct constituting a violation of subsection (a), (b), (c), or (d) of Section 27 of the Office of Federal Procurement Policy Act (41 U.S.C. 423) (the Act), as amended by section 4304 of the 1996 National Defense Authorization Act for Fiscal Year 1996 (Pub.L. 104-106), the Government may--

(1) Cancel the solicitation, if the contract has not yet been awarded or issued; or

(2) Rescind the contract with respect to which--

(i) The Contractor or someone acting for the Contractor has been convicted for an offense where the conduct constitutes a violation of subsection 27 (a) or (b) of the Act for the purpose of either--

(A) Exchanging the information covered by such subsections for anything of value; or

(B) Obtaining or giving anyone a competitive advantage in the award of a Federal agency procurement contract; or

(ii) The head of the contracting activity has determined, based upon a preponderance of the evidence, that the Contractor or someone acting for the Contractor has engaged in conduct constituting an offense punishable under subsections 27(e) (1) of the Act.

(b) If the Government rescinds the contract under paragraph (a) of this clause, the Government is entitled to recover, in addition to any penalty prescribed by law, the amount expended under the contract.

(c) The rights and remedies of the Government specified herein are not exclusive, and are in addition to any other rights and remedies provided by law, regulation, or under this contract.

(End of clause)

7. PRICE OR FEE ADJUSTMENT FOR ILLEGAL OR IMPROPER ACTIVITY (JAN 1997) FAR 52.203-10

(a) The Government, at its election, may reduce the price of a fixed-price type contract and the total cost and fee under a cost-type contract by the amount of profit or fee determined as set forth in paragraph (b) of this clause if the head of the contracting activity or designee determines that there was a violation of subsection 27(a), (b), or (c) of the Office of Federal Procurement Policy Act, as amended (41 U.S.C. 423), as implemented in section 3.104 of the Federal Acquisition Regulation. In the case of a contract modification, the fee subject to reduction is the fee specified in the particular contract modification at the time of execution, except as provided in subparagraph (b)(5) of this clause.

(b) The price or fee reduction referred to in paragraph (a) of this clause shall be--

(1) For cost-plus-fixed-fee contracts, the amount of the fee specified in the contract at the time of award;

(2) For cost-plus-incentive-fee contracts, the target fee specified in the contract at the time of award, notwithstanding any minimum fee or “fee floor” specified in the contract;

(3) For cost-plus-award-fee contracts--

(i) For base fee established in the contract at the time of contract award;

(ii) If no base fee is specified in the contract, 30 percent of the amount of each award fee otherwise payable to the Contractor for each award fee evaluation period or at each award fee determination point.

(4) For fixed-price-incentive contracts, the Government may--

(i) Reduce the contract target price and contract target profit both by an amount equal to the initial target profit specified in the contract at the time of contract award; or

(ii) If an immediate adjustment to the contract target price and contract target profit would have a significant adverse impact on the incentive price revision relationship under the contract, or adversely affect the contract financing provisions, the Contracting Officer may defer such adjustment until establishment of the total final price of the contract.

The total final price established in accordance with the incentive price revision provisions of the contract shall be reduced by an amount equal to the initial target profit specified in the contract at the time of contract award and such reduced price shall be the total final contract price.

(5) For firm-fixed price contracts, by 10 percent of the initial contract price or a profit amount determined by the Contracting Officer from records or documents in existence prior to the date of the contract award.

(c) The Government may, at its election, reduce a prime contractor's price or fee in accordance with the procedures of paragraph (b) of this clause for violations of the Act by its subcontractors by an amount not to exceed the amount of profit or fee reflected in the subcontract at the time the subcontract was first definitively priced.

(d) In addition to the remedies in paragraphs (a) and (c) of this clause, the Government may terminate this contract for default. The rights and remedies of the Government specified herein are not exclusive, and are in addition to any other rights and remedies provided by law or under this contract.

(End of clause)

8. LIMITATION ON PAYMENTS TO INFLUENCE CERTAIN FEDERAL TRANSACTIONS (JUN 1997) FAR 52.203-12

(a) *Definitions.*

"Agency," as used in this clause, means executive agency as defined in 2.101.

"Covered Federal action," as used in this clause, means any of the following Federal actions:

(1) The awarding of any Federal contract.

(2) The making of any Federal grant.

(3) The making of any Federal loan.

(4) The entering into of any cooperative agreement.

(5) The extension, continuation, renewal, amendment, or modification of any Federal contract, grant, loan, or cooperative agreement.

"Indian tribe" and "tribal organization," as used in this clause, have the meaning provided in section 4 of the Indian Self-Determination and Education Assistance Act (25 U.S.C. 450B) and include Alaskan Natives.

"Influencing or attempting to influence," as used in this clause, means making, with the intent to influence, any communication to or appearance before an officer or employee of any agency, a Member of Congress, an officer or employee of Congress, or an employee of a Member of Congress in connection with any covered Federal action.

"Local government," as used in this clause, means a unit of government in a State and, if chartered, established, or otherwise recognized by a State for the performance of a governmental duty, including a local public authority, a special district, an intrastate district, a council of governments, a sponsor group representative organization, and any other instrumentality of a local government.

"Officer or employee of an agency," as used in this clause, includes the following individuals who are employed by an agency:

(1) An individual who is appointed to a position in the Government under title 5, United States Code, including a position under a temporary appointment.

(2) A member of the uniformed services, as defined in subsection 101(3), title 37, United States Code.

(3) A special Government employee, as defined in section 202, title 18, United States Code.

(4) An individual who is a member of a Federal advisory committee, as defined by the Federal advisory Committee Act, title 5, United States Code, appendix 2.

"Person," as used in this clause, means an individual, corporation, company, association, authority, firm, partnership, society, State, and local government, regardless of whether such entity is operated for profit, or not for profit. This term excludes an Indian tribe, tribal organization, or any other Indian organization with respect to expenditures specifically permitted by other Federal law.

"Reasonable compensation," as used in this clause, means, with respect to a regularly employed officer or employee of any person, compensation that is consistent with the normal compensation for such officer or employee for work that is not furnished to, not funded by, or not furnished in cooperation with the Federal Government.

"Reasonable payment," as used in this clause, means, with respect to professional and other technical services, a payment in an amount that is consistent with the amount normally paid for such services in the private sector.

"Recipient," as used in this clause, includes the Contractor and all subcontractors. This term excludes an Indian tribe, tribal organization, or any other Indian organization with respect to expenditures specifically permitted by other Federal law.

"Regularly employed," as used in this clause, means, with respect to an officer or employee of a person requesting or receiving a Federal contract, an officer or employee who is employed by such person for at least 130 working days within 1 year immediately preceding the date of the submission that initiates agency consideration of such person for receipt of such contract. An officer or employee who is employed by such person for less than 130 working days within 1 year immediately preceding the date of the submission that initiates agency consideration of such person shall be considered to be regularly employed as soon as he or she is employed by such person for 130 working days.

"State," as used in this clause, means a State of the United States, the District of Columbia, the Commonwealth of Puerto Rico, a territory or possession of the United States, an agency or instrumentality of a State, and multi-State, regional, or interstate entity having governmental duties and powers.

(b) *Prohibitions*.

(1) Section 1352 of title 31, United States Code, among other things, prohibits a recipient of a Federal contract, grant, loan, or cooperative agreement from using appropriated funds to pay any person for influencing or attempting to influence an officer or employee of any agency, a Member of Congress, an officer or employee of a Member of Congress in connection with any of the following covered Federal actions: the awarding of any Federal contract; the making of any Federal grant; the making of any Federal loan; the entering into of any cooperative agreement; or the modification of any Federal contract, grant, loan or cooperative agreement.

(2) The Act also requires Contractors to furnish a disclosure if any funds other than Federal appropriated funds (including profit or fee received under a covered Federal transaction) have been paid, or will be paid, to any person for influencing or attempting to influence an officer or employee of any agency, a Member of Congress, an officer or employee of Congress, or an employee of a Member of Congress in connection with a Federal contract, grant, loan, or cooperative agreement.

(3) The prohibitions of the Act do not apply under the following conditions:

(i) *Agency and legislative liaison by own employees*.

(A) The prohibition on the use of appropriated funds, in subparagraph (b)(1) of this clause, does not apply in the case of a payment of reasonable compensation made to an officer or employee of a person requesting or receiving a covered Federal action if the payment is for agency and legislative liaison activities not directly related to a covered Federal action.

(B) For purposes of subdivision (b)(3)(i)(A) of this clause, providing any information specifically requested by an agency or Congress is permitted at any time.

(C) The following agency and legislative liaison activities are permitted at any time where they are not related to a specific solicitation for any covered Federal action:

(1) Discussing with an agency the qualities and characteristics (including individual demonstrations) of the person's products or services, conditions or terms of sale, and service capabilities.

(2) Technical discussions and other activities regarding the application or adaptation of the person's products or services for an agency's use.

(D) The following agency and legislative liaison activities are permitted where they are prior to formal solicitation of any covered Federal action--

(1) Providing any information not specifically requested but necessary for an agency to make an informed decision about initiation of a covered Federal action;

(2) Technical discussions regarding the preparation of an unsolicited proposal prior to its official submission; and

(3) Capability presentations by persons seeking awards from an agency pursuant to the provisions of the Small Business Act, as amended by Pub. L. 95-507, and subsequent amendments.

(E) Only those services expressly authorized by subdivision (b)(3)(i)(A) of this clause are permitted under this clause.

(ii) *Professional and technical services*.

(A) The prohibition on the use of appropriated funds, in subparagraph (b)(1) of this clause, does not apply in the case of--

(1) A payment of reasonable compensation made to an officer or employee of a person requesting or receiving a covered Federal action or an extension, continuation, renewal, amendment, or modification of a covered Federal action, if payment is for professional or technical services rendered directly in the preparation, submission, or negotiation of any bid, proposal, or application for that Federal

action or for meeting requirements imposed by or pursuant to law as a condition for receiving that Federal action.

(2) Any reasonable payment to a person, other than an officer or employee of a person requesting or receiving a covered Federal action or an extension, continuation, renewal, amendment, or modification of a covered Federal action if the payment is for professional or technical services rendered directly in the preparation, submission, or negotiation of any bid, proposal, or application for that Federal action or for meeting requirements imposed by or pursuant to law as a condition for receiving that Federal action. Persons other than officers or employees of a person requesting or receiving a covered Federal action include consultants and trade associations.

(B) For purposes of subdivision (b)(3)(ii)(A) of this clause, "professional and technical services" shall be limited to advice and analysis directly applying any professional or technical discipline. For example, drafting of a legal document accompanying a bid or proposal by a lawyer is allowable. Similarly, technical advice provided by an engineer on the performance of operational capability of a piece of equipment rendered directly in the negotiation of a contract is allowable. However, communications with the intent to influence made by a professional (such as a licensed lawyer) or a technical person (such as a licensed accountant) are not allowable under this section unless they provide advice and analysis directly applying their professional or technical expertise and unless the advice or analysis is rendered directly and solely in the preparation, submission or negotiation of a covered Federal action. Thus, for example, communications with the intent to influence made by a lawyer that do not provide legal advice or analysis directly and solely related to the legal aspects of this or her client's proposal, but generally advocate one proposal over another are not allowable under this section because the lawyer is not providing professional legal services. Similarly, communications with the intent to influence made by an engineer providing an engineering analysis prior to the preparation or submission of a bid or proposal are not allowable under this section since the engineer is providing technical services but not directly in the preparation, submission or negotiation of a covered Federal action.

(C) Requirements imposed by or pursuant to law as a condition for receiving a covered Federal award include those required by law or regulation and any other requirements in the actual award documents.

(D) Only those services expressly authorized by subdivisions (b)(3)(ii)(A)(1) and (2) of this clause are permitted under this clause.

(E) The reporting requirements of FAR 3.803(a) shall not apply with respect to payments of reasonable compensation made to regularly employed officers or employees of a person.

(c) *Disclosure*.

(1) The Contractor who requests or receives from an agency a Federal contract shall file with that agency a disclosure form, OMB standard form LLL, Disclosure of Lobbying Activities, if such person has made or has agreed to make any payment using nonappropriated funds (to include profits from any covered Federal action), which would be prohibited under subparagraph (b)(1) of this clause, if paid for with appropriated funds.

(2) The Contractor shall file a disclosure form at the end of each calendar quarter in which there occurs any event that materially affects the accuracy of the information contained in any disclosure form previously filed by such person under subparagraph (c)(1) of this clause. An event that materially affects the accuracy of the information reported includes--

(i) A cumulative increase of $25,000 or more in the amount paid or expected to be paid for influencing are attempting to influence a covered Federal action; or

(ii) A change in the person(s) or individual(s) influencing or attempting to influence a covered Federal action; or

(iii) A change in the officer(s), employee(s), or Member(s) contacted to influence or attempting to influence a covered Federal action.

(3) The Contractor shall require the submittal of a certification, and if required, a disclosure form by any person who requests or receives any subcontract exceeding $100,000 under the Federal contract.

(4) All subcontractor disclosure forms (but not certifications) shall be forwarded from tier to tier until received by the prime Contractor. The prime Contractor shall submit all disclosures to the Contracting Officer at the end of the

calendar quarter in which the disclosure form is submitted by the subcontractor. Each subcontractor certification shall be retained in the subcontract file of the awarding Contractor.

(d) *Agreement*. The Contractor agrees not to make any payment prohibited by this clause.

(e) *Penalties*.

(1) Any person who makes an expenditure prohibited under paragraph (a) of this clause or who fails to file or amend the disclosure form to be filed or amended by paragraph (b) of this clause shall be subject to civil penalties as provided for by 31 U.S.C. 1352. An imposition of a civil penalty does not prevent the Government from seeking any other remedy that may be applicable.

(2) Contractors may rely without liability on the representation made by their subcontractors in the certification and disclosure form.

(f) *Cost allowability*. Nothing in this clause makes allowable or reasonable any costs which would otherwise be unallowable or unreasonable. Conversely, costs made specifically unallowable by the requirements in this clause will not be made allowable under any other provision.

(End of clause)

9. SPECIAL PROHIBITION ON EMPLOYMENT (JUN 1997) DFARS 252.203-7001

(a) *Definitions*. As used in this clause--

(1) "Arising out of a contract with the DoD" means any act in connection with--

(i) Attempting to obtain,

(ii) Obtaining, or

(iii) Performing a contract or first-tier subcontract of any agency, department, or component of the Department of Defense (DoD).

(2) "Conviction of fraud or any other felony" means any conviction for fraud or a felony in violation of state or Federal criminal statutes, whether entered on a verdict or plea, including a plea of *nolo contendere*, for which sentence has been imposed.

(3) "Date of conviction" means the date judgment was entered against the individual.

(b) 10 U.S.C. 2408 provides that any individual who is convicted after September 29, 1988, of fraud or any other felony arising out of a contract with the DoD is prohibited from:

(1) Working in a management or supervisory capacity on any DoD contract or first-tier subcontract;

(2) Serving on the board of directors of any DoD contractor or fist-tier subcontractor; or

(3) Serving as a consultant to any DoD contractor or first-tier subcontractor.

(c) Unless waived, the prohibition in paragraph (b) applies for five years from the date of conviction.

(d) 10 U.S.C. 2408 further provides that a defense contractor or first-tier subcontractor shall be subject to a criminal penalty of not more than $500,000 if convicted of knowingly--

(1) Employing a person under a prohibition specified in paragraph (b) of this clause; or

(2) Allowing such a person to serve on the board of directors of the contractor or first-tier subcontractor.

(c) In addition to the criminal penalties contained in 10 U.S.C. 2408, the Government may consider other available remedies, such as--

(1) Suspension or debarment;

(2) Cancellation of the contract at no cost to the Government; or

(3) Termination of the contract for default.

(f) The Contractor may submit written requests for waiver of the prohibitions in paragraph (b) of this clause to the Contracting Officer. Requests shall clearly identify--

(1) The person involved;

(2) The nature of the conviction and resultant sentence or punishment imposed;

(3) The reasons for the requested waiver, and

(4) An explanation of why a waiver is in the interest of national security.

(g) The Contractor agrees to include the substance of this clause, appropriately modified to reflect the identify and relationship of the parties, in all first-tier subcontracts exceeding the simplified acquisition threshold in part 12 of the Federal Acquisition Regulation, except those for commercial items or components.

(h) Pursuant to 10 U.S.C. 2408(c), defense contractors and subcontractors may obtain information as to whether a particular person has been convicted of fraud or any other felony arising out of a contract with the DoD by contacting The Office of Justice Programs, The Denial of Benefits Office, U.S. Department of Justice, telephone (202) 616-3507.

(End of clause)

10. DISPLAY OF DOD HOTLINE POSTER (DEC 1991) DFARS 252.203-7002

(a) The Contractor shall display prominently in common work areas within business segments performing work under Department of Defense (DoD) contracts, DoD Hotline Posters prepared by the DoD Office of the Inspector General.

(b) DoD Hotline Posters may be obtained from the DoD Inspector General, ATTN: Defense Hotline, 400 Army Navy Drive, Washington, DC 22202-2884.

(c) The Contractor need not comply with paragraph (a) of this clause if it has established a mechanism, such as a hotline, by which employees may report suspected instances of improper conduct, and instructions that encourage employees to make such reports.

(End of clause)

11. PRINTING/COPYING DOUBLE-SIDED ON RECYCLED PAPER (JUN 1996)
FAR 52.204-4

(a) In accordance with Executive Order 12873, dated October 20, 1993, as amended by Executive Order 12995, dated March 25, 1996, the Offeror/Contractor is encouraged to submit paper documents, such as offers, letters, or reports, that are printed/copied double-sided on recycled paper that has at least 20 percent postconsumer material.

(b) The 20 percent standard applies to high-speed copier paper offset paper, forms bond, computer printout paper, carbonless paper, file folders, white woven envelopes, and other uncoated printed and writing paper such as writing and office paper, book paper, cotton fiber paper, and cover stock. An alternative to meeting the 20 percent postconsumer material standards is 50 percent recovered material content of certain industrial by-products.

(End of clause)

12. REQUIRED CENTRAL CONTRACTOR REGISTRATION (MAR 1998)
DFARS 52.204-7004

(a) Definitions. As used in this clause—

(1) Central Contractor Registration (CCR) database means the primary DoD repository for contractor information required for the conduct of business with DoD.

(2) Data Universal Numbering System (DUNS) number means the 9-digit number assigned by Dun and Bradstreet Information Services to identify unique business entities.

(3) Data Universal Numbering System+4 (DUNS+4) number means the DUNS number assigned by Dun and Bradstreet plus a 4-digit suffix that may be assigned by a parent (controlling) business concern. This 4-digit suffix may be assigned at the discretion of the parent business concern for such purposes as identifying subunits or affiliates of the parent business concern.

(4) Registered in the CCR database means that all mandatory information including the DUNS number or the DUNS+4 number, if applicable, and the corresponding Commercial and Government Entity (CAGE) code, is in the CCR database; the DUNS number and the CAGE code have been validated; and all edits have been successfully completed.

(b) (1) By submission of an offer, the offeror acknowledges the requirement that a prospective awardee must be registered in the CCR database prior to award, during the performance, and through final payment of any contract resulting from this solicitation, except for awards to foreign vendors for work to be performed outside the United States.

(2) The offeror shall provide its DUNS or, if applicable, its DUNS+4 number with its offer, which will be used by the Contracting Officer to verify that the offeror is registered in the CCR database.

(3) Lack of registration in the CCR database will make an offer ineligible for award.

(4) DoD has established a goal of registering an applicant in the CCR database within 48 hours after receipt of a complete and accurate application via the Internet. However, registration of an applicant submitting an application through a method other than the Internet may take up to 30 days. Therefore, offerors that are not registered should consider applying for registration immediately upon receipt of this solicitation.

(c) The Contractor is responsible for the accuracy and completeness of the data within the CCR and for any liability resulting from the Government's reliance on inaccurate or incomplete data. To remain registered in the CCR database after initial registration, the Contractor is required to confirm on an annual basis that its information in the CCR database is accurate and complete.

(d) Offerors and contractors may obtain information on registration and annual confirmation requirements by calling 1-888-227-2423, or via the Internet at http://ccr.edi.disa.mil.

(End of clause)

13. PROVISION OF INFORMATION TO COOPERATIVE AGREEMENT HOLDERS (DEC 1991) DFARS 252.205-7000

(a) *Definition*.

"Cooperative agreement holder" means a State or local government; a private, nonprofit organization; a tribal organization (as defined in section 4(c) of the Indian Self-Determination and Education Assistance Act (Pub. L. 93-268; 25 U.S.C. 450(c)); or an economic enterprise (as defined in section 3(e) of the Indian Financing Act of 1974 (Pub. L. 93-362; 25 U.S.C. 1452(e)) whether such economic enterprise is organized for profit or nonprofit purposes; which has an agreement with the Defense Logistics Agency to furnish procurement technical assistance to business entities.

(b) The Contractor shall provide cooperative agreement holders, upon their request, with a list of those appropriate employees or offices responsible for entering into subcontracts under defense contracts. The list shall include the business address, telephone number, and area of responsibility of each employee or office.

(c) The Contractor need not provide the listing to a particular cooperative agreement holder more frequently than once a year.

(End of clause)

14. PROTECTING THE GOVERNMENT'S INTEREST WHEN SUBCONTRACTING WITH CONTRACTORS DEBARRED, SUSPENDED, OR PROPOSED FOR DEBARMENT (JUL 1995) FAR 52.209-6

(a) The Government suspends or debars Contractors to protect the Government's interests. The Contractor shall not enter into any subcontract in excess of $25,000 with a Contractor that is debarred, suspended, or proposed for debarment unless there is a compelling reason to do so.

(b) The Contractor shall require each proposed first-tier subcontractor, whose subcontract will exceed $25,000, to disclose to the Contractor, in writing, whether as of the time of award of the subcontract, the subcontractor, or its principals, is or is not debarred, suspended, or proposed for debarment by the Federal Government.

(c) A corporate officer or a designee of the Contractor shall notify the Contracting Officer, in writing, before entering into a subcontract with a party that is debarred, suspended, or proposed for debarment (see FAR 9.404 for information on the List of Parties Excluded from Federal Procurement and Nonprocurement Programs). The notice must include the following:

(1) The name of the subcontractor.

(2) The Contractor's knowledge of the reasons for the subcontractor being on the List of Parties Excluded from Federal Procurement and Nonprocurement Programs.

(3) The compelling reasons(s) for doing business with the subcontractor notwithstanding its inclusion on the List of Parties Excluded From Federal Procurement and Nonprocurement Programs.

(4) The systems and procedures the Contractor has established to ensure that it is fully protecting the Government's interest when dealing with such subcontractor in view of the specific basis for the party's debarment, suspension, or proposed debarment.

(End of clause)

15. DEFENSE PRIORITY AND ALLOCATION REQUIREMENTS (SEP 1990) FAR 52.211-15

NOTE: This clause applies only to military contracts.

This is a rated order certified for national defense use, and the contractor shall follow all the requirements of the Defense Priorities and Allocations System regulation (15 CFR 700).

(End of clause)

16. VARIATION IN ESTIMATED QUANTITY (APR 1984) FAR 52.211-18

If the quantity of a unit-priced item in this contract is an estimated quantity and the actual quantity of the unit-priced item varies more than 15 percent above or below the estimated quantity, an equitable adjustment in the contract price shall be made upon demand of either party. The equitable adjustment shall be based upon any increase or decrease in costs due solely to the variation above 115 percent or below 85 percent of the estimated quantity. If the quantity variation is such as to cause an increase in the time necessary for completion, the Contractor may request, in writing, an extension of time, to

be received by the Contracting Officer within 10 days from the beginning of the delay, or within such further period as may be granted by the Contracting Officer before the date of final settlement of the contract. Upon the receipt of a written request for an extension, the Contracting Officer shall ascertain the facts and make an adjustment for extending the completion date as, in the judgment of the Contracting Officer, is justified.

(End of clause)

17. AUDIT AND RECORDS--SEALED BIDDING (OCT 1997) FAR 52.214-26

NOTE: This clause applies only to sealed bid contracts.

(a) As used in this clause, "records" includes books, documents, accounting procedures and practices, and other data, regardless of type and regardless of whether such items are in written form, in the form of computer data, or in any other form.

(b) *Cost or pricing data*. If the Contractor has been required to submit cost or pricing data in connection with the pricing of any modification to this contract, the Contracting Officer, or an authorized representative of the Contracting Officer, in order to evaluate the accuracy, completeness, and currency of the cost or pricing data, shall have the right to examine and audit all of the Contractor's records, including computations and projections, related to--

(1) The proposal for the modification;

(2) The discussions conducted on the proposal(s), including those related to negotiating;

(3) Pricing of the modification; or

(4) Performance of the modification.

(c) *Comptroller General*. In the case of pricing any modification, the Comptroller General of the United States, or an authorized representative, shall have the same rights as specified in paragraph (b) of this clause.

(d) *Availability*. The Contractor shall make available at its office at all reasonable times the materials described in paragraph (b) of this clause, for examination, audit, or reproduction, until 3 years after final payment under this contract, or for any other period specified in Subpart 4.7 of the Federal Acquisition Regulation (FAR). FAR Subpart 4.7, Contractor Records Retention, in effect on the date of this contract, is incorporated by reference in its entirety and made a part of this contract.

(1) If this contract is completely or partially terminated, the records relating to the work terminated shall be made available for 3 years after any resulting final termination settlement.

(2) Records pertaining to appeals under the Disputes clause or to litigation or the settlement of claims arising under or relating to the performance of this contract shall be made available until disposition of such appeals, litigation, or claims.

(e) The Contractor shall insert a clause containing all the provisions of this clause, including this paragraph (e), in all subcontracts expected to exceed the threshold in FAR 15.403-4(a)(1) for submission of cost or pricing data.

(End of clause)

18. PRICE REDUCTION FOR DEFECTIVE COST OR PRICING DATA--MODIFICATIONS--SEALED BIDDING (OCT 1997) FAR 52.214-27

NOTE: This clause applies only to sealed bid contracts

(a) This clause shall become operative only for any modification to this contract involving aggregate increases and/or decreases in costs, plus applicable profits, expected to exceed the threshold for the submission of cost or pricing data at FAR 15.403-4(a)(1), except that this clause does not apply to a modification if an exception under FAR 15.403-1(b) applies.

(b) If any price, including profit, negotiated in connection with any modification under this clause, was increased by any significant amount because (1) the Contractor or a subcontractor furnished cost or pricing data that were not complete, accurate, and current as certified in its Certificate of Current Cost or Pricing Data, (2) a subcontractor or prospective subcontractor furnished the Contractor cost or pricing data that were not complete, accurate, and current as certified in the Contractor's Certificate of Current Cost or Pricing Data, or (3) any of these parties furnished data of any description that were not accurate, the price shall be reduced accordingly and the contract shall be modified to reflect the reduction. This right to a price reduction is limited to that resulting from defects in data relating to modifications for which this clause becomes operative under paragraph (a) of this clause.

(c) Any reduction in the contract price under paragraph (b) of this clause due to defective data from a prospective subcontractor that was not subsequently awarded the subcontract shall be limited to the amount, plus applicable overhead

and profit markup, by which (1) the actual subcontract or (2) the actual cost to the Contractor, if there was no subcontract, was less than the prospective subcontract cost estimate submitted by the Contractor; provided, that the actual subcontract price was not itself affected by defective cost or pricing data.

(d)(1) If the Contracting Officer determines under paragraph (b) of this clause that a price or cost reduction should be made, the Contractor agrees not to raise the following matters as a defense:

(i) The Contractor or subcontractor was a sole source supplier or otherwise was in a superior bargaining position and thus the price of the contract would not have been modified even if accurate, complete, and current cost or pricing data had been submitted.

(ii) The Contracting Officer should have known that the cost or pricing data in issue were defective even though the Contractor or subcontractor took no affirmative action to bring the character of the data to the attention of the Contracting Officer.

(iii) The contract was based on an agreement about the total cost of the contract and there was no agreement about the cost of each item procured under the contract.

(iv) The Contractor or subcontractor did not submit a Certificate of Current Cost or Pricing Data.

(2)(i) Except as prohibited by subdivision (d)(2)(ii) of this clause, an offset in an amount determined appropriate by the Contracting Officer based upon the facts shall be allowed against the amount of a contract price reduction if--

(A) The Contractor certifies to the Contracting Officer that, to the best of the Contractor's knowledge and belief, the Contractor is entitled to the offset in the amount requested; and

(B) The Contractor proves that the cost or pricing data were available before the date of agreement on the price of the contract (or price of the modification) and that the data were not submitted before such date.

(ii) An offset shall not be allowed if--

(A) The understated data was known by the Contractor to be understated when the Certificate of Current Cost or Pricing Data was signed; or

(B) The Government proves that the facts demonstrate that the contract price would not have increased in the amount to be offset even if the available data has been submitted before the date of agreement on price.

(e) If any reduction in the contract price under this clause reduces the price of items for which payment was made prior to the date of the modification reflecting the price reduction, the Contractor shall be liable to and shall pay the United States at the time such overpayment is repaid--

(1) Simple interest on the amount of such overpayment to be computed from the date(s) of overpayment to the Contractor to the date the Government is repaid by the Contractor at the applicable underpayment rate effective for each quarter prescribed by the Secretary of the Treasury under 26 U.S.C. 6621 (a)(2); and

(2) A penalty equal to the amount of the overpayment, if the Contractor or subcontractor knowingly submitted cost or pricing data which were incomplete, inaccurate, or noncurrent.

(End of clause)

19. SUBCONTRACTOR COST OR PRICING DATA--MODIFICATIONS-SEALED BIDDING (OCT 1997) FAR 52.214-28

NOTE: This clause applies only to sealed bid contracts.

(a) The requirements of paragraphs (b) and (c) of this clause shall (1) become operative only for any modification to this contract involving aggregate increases and/or decreases in costs, plus applicable profits, expected to exceed the threshold for submission of cost or pricing data at FAR 15.403-4(a)(1), and (2) be limited to such modifications.

(b) Before awarding any subcontract expected to exceed the threshold for submission of cost or pricing data at FAR 15.403-4(a)(1), on the date of agreement on price or the date of award, whichever is later; or before pricing any subcontract modifications involving aggregate increases and/or decreases in costs, plus applicable profits, expected to exceed the threshold for submission of cost or pricing data at FAR 15.403-4(a)(1), the Contractor shall require the subcontractor to submit cost or pricing data (actually or by specified identification in writing), unless an exception under FAR 15.403-1(b) applies.

(c) The Contractor shall require the subcontractor to certify in substantially the form prescribed in subsection FAR 15.406-2 that, to the best of its knowledge and belief, the data submitted under paragraph (b) of this clause were accurate, complete, and current as of the date of agreement on the negotiated price of the subcontract or subcontract modification.

(d) The Contractor shall insert the substance of this clause, including this paragraph (d), in each subcontract that, when entered into, exceeds the threshold for submission of cost or pricing data at FAR 15.403-4(a)(1).

(End of clause)

20. AUDIT AND RECORDS--NEGOTIATION (AUG 1996) FAR 52.215-2

NOTE: This clause applies only to negotiated contracts.

(a) As used in this clause, "records" includes books, documents, accounting procedures and practices, and other data, regardless of type and regardless of whether such items are in written form, in the form of computer data, or in any other form.

(b) *Examination of costs*. If this is a cost-reimbursement, incentive, time-and-materials, labor-hour, or price redeterminable contract, or any combination of these, the Contractor shall maintain and the Contracting Officer, or an authorized representative of the Contracting Officer, shall have the right to examine and audit all records and other evidence sufficient to reflect properly all costs claimed to have been incurred or anticipated to be incurred directly or indirectly in performance of this contract. This right of examination shall include inspection at all reasonable times of the Contractor's plants, or parts of them, engaged in performing the contract.

(c) *Cost or pricing data*. If the Contractor has been required to submit cost or pricing data in connection with any pricing action relating to this contract, the Contracting Officer, or an authorized representative of the Contracting Officer, in order to evaluate the accuracy, completeness, and currency of the cost or pricing data, shall have the right to examine and audit all of the Contractor's records, including computations and projections, related to--

(1) The proposal for the contract, subcontract, or modification;

(2) The discussions conducted on the proposal(s), including those related to negotiating;

(3) Pricing of the contract, subcontract, or modification; or

(4) Performance of the contract, subcontract or modification.

(d) *Comptroller General*.--(1) The Comptroller General of the United States, or an authorized representative, shall have access to and the right to examine any of the Contractor's directly pertinent records involving transactions related to this contract or a subcontract hereunder.

(2) This paragraph may not be construed to require the Contractor or subcontractor to create or maintain any record that the Contractor or subcontractor does not maintain in the ordinary course of business or pursuant to a provision of law.

(e) *Reports*. If the Contractor is required to furnish cost, funding, or performance reports, the Contracting Officer or an authorized representative of the Contracting Officer shall have the right to examine and audit the supporting records and materials, for the purpose of evaluating (1) the effectiveness of the Contractor's policies and procedures to produce data compatible with the objectives of these reports and (2) the data reported.

(f) *Availability*. The Contractor shall make available at its office at all reasonable times the records, materials, and other evidence described in paragraphs (a), (b), (c), (d), and (e) of this clause, for examination, audit, or reproduction, until 3 years after final payment under this contract, or for any shorter period specified in Subpart 4.7, Contractor Records Retention, of the Federal Acquisition Regulation (FAR), or for any longer period required by statute or by other clauses of this contract. In addition--

(1) If this contract is completely or partially terminated, the records relating to the work terminated shall be made available for 3 years after any resulting final termination settlement; and

(2) Records relating to appeals under the Disputes clause or to litigation or the settlement of claims arising under or relating to this contract shall be made available until such appeals, litigation, or claims are finally resolved.

(g) The Contractor shall insert a clause containing all the terms of this clause, including this paragraph (g), in all subcontracts under this contract that exceed the simplified acquisition threshold, and--

(1) That are cost-reimbursement, incentive, time-and-materials, labor-hour, or price-redeterminable type or any combination of these;

(2) For which cost or pricing data are required; or

(3) That require the subcontractor to furnish reports as discussed in paragraph (c) of this clause.

The clause may be altered only as necessary to identify properly the contracting parties and the Contracting Officer under the Government prime contract.

(End of clause)

21. PRICE REDUCTION FOR DEFECTIVE COST OR PRICING DATA (OCT 1997) FAR 52.215-10

NOTE: This clause applies only to negotiated contracts.

(a) If any price, including profit or fee, negotiated in connection with this contract, or any cost reimbursable under this contract, was increased by any significant amount because --(1) The Contractor or a subcontractor furnished cost or pricing data that were not complete, accurate, and current as certified in its Certificate of Current Cost or Pricing Data; (2) A subcontractor or prospective subcontractor furnished the Contractor cost or pricing data that were not complete, accurate, and current as certified in the Contractor's Certificate of Current Cost or Pricing Data, or (3) Any of these parties furnished data of any description that were not accurate, the price or cost shall be reduced accordingly and the contract shall be modified to reflect the reduction.

(b) Any reduction in the contract price under paragraph (a) of this clause due to defective data from a prospective subcontractor that was not subsequently awarded the subcontract shall be limited to the amount, plus applicable overhead and profit markup, by which (1) The actual subcontract; or (2) The actual cost to the Contractor, if there was no subcontract, was less than the prospective subcontract cost estimate submitted by the Contractor; provided, that the actual subcontract price was not itself affected by defective cost or pricing data.

(c)(1) If the Contracting Officer determines under paragraph (a) of this clause that a price or cost reduction should be made, the Contractor agrees not to raise the following matters as a defense:

(i) The Contractor or subcontractor was a sole source supplier or otherwise was in a superior bargaining position and thus the price of the contract would not have been modified even if accurate, complete, and current cost or pricing data had been submitted.

(ii) The Contracting Officer should have known that the cost or pricing data in issue were defective even though the Contractor or subcontractor took no affirmative action to bring the character of the data to the attention of the Contracting Officer.

(iii) The contract was based on an agreement about the total cost of the contract and there was no agreement about the cost of each item procured under the contract.

(iv) The Contractor or subcontractor did not submit a Certificate of Current Cost or Pricing Data.

(2)(i) Except as prohibited by subdivision (c)(2)(ii) of this clause, an offset in an amount determined appropriate by the Contracting Officer based upon the facts shall be allowed against the amount of a contract price reduction if--

(A) The Contractor certifies to the Contracting Officer that, to the best of the Contractor's knowledge and belief, the Contractor is entitled to the offset in the amount requested; and

(B) The Contractor proves that the cost or pricing data were available before the "as of" date specified on its Certificate of Current Cost or Pricing Data, and that the data were not submitted before such date

(ii) An offset shall not be allowed if--

(A) The understated data was known by the Contractor to be understated before the "as of" date specified on its Certificate of Current Cost or Pricing Data; or

(B) The Government proves that the facts demonstrate that the contract price would not have increased in the amount to be offset even if the available data has been submitted before the "as of" date specified on its Certificate of Current Cost or Pricing Data.

(d) If any reduction in the contract price under this clause reduces the price of items for which payment was made prior to the date of the modification reflecting the price reduction, the Contractor shall be liable to and shall pay the United States at the time such overpayment is repaid--

(1) Simple interest on the amount of such overpayment to be computed from the date(s) of overpayment to the Contractor to the date the Government is repaid by the Contractor at the applicable under payment rate effective for each quarter prescribed by the Secretary of the Treasury under 26 U.S.C. 6621(a)(2); and

(2) A penalty equal to the amount of the overpayment, if the Contractor or subcontractor knowingly submitted cost or pricing data which were incomplete, inaccurate, or noncurrent.

(End of clause)

22. SUBCONTRACTOR COST OR PRICING DATA (OCT 1997) FAR 52.215-12

NOTE: This clause applies only to negotiated contracts.

(a) Before awarding any subcontract expected to exceed the threshold for submission of cost or pricing data at FAR 15.403-4, on the date of agreement on price or the date of award, whichever is later; or before pricing any subcontract modification involving a pricing adjustment expected to exceed the threshold for submission of cost or pricing data at FAR 15.403-4, the Contractor shall require the subcontractor to submit cost or pricing data (actually or by specific identification in writing), unless an exception under FAR 15.403-1 applies.

(b) The Contractor shall require the subcontractor to certify in substantially the form prescribed in subsection 15.406-2 that, to the best of its knowledge and belief, the data submitted under paragraph (a) of this clause were accurate, complete, and current as of the date of agreement on the negotiated price of the subcontract or subcontract modification.

(c) In each subcontract that exceeds the threshold for submission of cost or pricing data at FAR 15.403-4, when entered into, the Contractor shall insert either--

(1) The substance of this clause, including this paragraph (c), if paragraph (a) of this clause requires submission of cost or pricing data for the subcontract; or

(2) The substance of the clause at FAR 52.215-13, Subcontractor Cost or Pricing Data--Modifications.

(End of clause)

23. PENSION ADJUSTMENTS AND ASSET REVERSIONS (DEC 1998) FAR 52.215-15

NOTE: This clause applies only to negotiated contracts.

(a) The Contractor shall promptly notify the Contracting Officer in writing when it determines that it will terminate a defined-benefit pension plan or otherwise recapture such pension fund assets.

(b) For segment closings, pension plan terminations, or curtailment of benefits, the adjustment amount shall be the amount measured, assigned, and allocated in accordance with 48 CFR 9904.413-50(c)(12) for contracts and subcontracts that are subject to Cost Accounting Standards (CAS) Board rules and regulations (48 CFR Chapter 99). For contracts and subcontracts that are not subject to CAS, the adjustment amount shall be the amount measured, assigned, and allocated in accordance with 48 CFR 9904.413-50(c)(12), except the numerator of the fraction at 48 CFR 9904.413- 50(c)(12)(vi) shall be the sum of the pension plan costs allocated to all non-CAS-covered contracts and subcontracts that are subject to Federal Acquisition Regulation (FAR) Subpart 31.2 or for which cost or pricing data were submitted.

(c) For all other situations where assets revert to the Contractor, or such assets are constructively received by it for any reason, the Contractor shall, at the Government's option, make a refund or give a credit to the Government for its equitable share of the gross amount withdrawn. The Government's equitable share shall reflect the Government's participation in pension costs through those contracts for which cost or pricing data were submitted or that are subject to FAR Subpart 31.2.

(d) The Contractor shall include the substance of this clause in all subcontracts under this contract that meet the applicability requirement of FAR 15.408(g).

(End of clause)

24. REVERSION OR ADJUSTMENT OF PLANS FOR POSTRETIREMENT BENEFITS (PRB) OTHER THAN PENSIONS (OCT 1997) FAR 52.215-18

NOTE: This clause applies only to negotiated contracts.

The Contractor shall promptly notify the Contracting Officer in writing when it determines that it will terminate or reduce a PRB plan. If PRB fund assets revert, or inure, to the Contractor or are constructively received by it under a plan termination or otherwise, the Contractor shall make a refund or give a credit to the Government for its equitable share as required by FAR 31.205-6(o)(6). The Contractor shall include the substance of this clause in all subcontracts under this contract which meet the applicability requirements of FAR 15.408(j)

(End of clause)

25. NOTIFICATION OF OWNERSHIP CHANGES (OCT 1997) FAR 52.215-19

NOTE: This clause applies only to negotiated contracts.

(a) The Contractor shall make the following notifications in writing:

(1) When the Contractor becomes aware that a change in its ownership has occurred, or is certain to occur, which could result in changes in the valuation of its capitalized assets in the accounting records, the Contractor shall notify the Administrative Contracting Officer (ACO) within 30 days.

(2) The Contractor shall also notify the ACO within 30 days whenever changes to asset valuations or any other cost changes have occurred or are certain to occur as a result of a change in ownership.

(b) The Contractor shall-- (1) Maintain current, accurate, and complete inventory records of assets and their costs; (2) Provide the ACO or designated representative ready access to the records upon request; (3) Ensure that all individual and

grouped assets, their capitalized values, accumulated depreciation or amortization, and remaining useful lives are identified accurately before and after each of the Contractor's ownership changes; and (4) Retain and continue to maintain depreciation and amortization schedules based on the asset records maintained before each Contractor ownership change.

(c) The Contractor shall include the substance of this clause in all subcontracts under this contract which meet the applicability requirement of FAR 15.408(k).

(End of clause)

26. PRICING ADJUSTMENTS (DEC 1991) DFARS 252.215-7000

NOTE: This clause applies only to negotiated contracts.

The term "pricing adjustment," as used in paragraph (a) of the clauses entitled "Price Reduction for Defective Cost or Pricing Data - Modifications," "Subcontractor Cost or Pricing Data," and "Subcontractor Cost or Pricing Data - Modifications," means the aggregate increases and/or decreases in cost plus applicable profits.

(End of clause)

27. UTILIZATION OF SMALL BUSINESS CONCERNS (JAN 1999) FAR 52.219-8

(a) It is the policy of the United States that small business concerns, HUBZone small business concerns, small business concerns owned and controlled by socially and economically disadvantaged individuals and small business concerns owned and controlled by women shall have the maximum practicable opportunity to participate in performing contracts let by any Federal agency, including contracts and subcontracts for subsystems, assemblies, components, and related services for major systems. It is further the policy of the United States that its prime contractors establish procedures to ensure the timely payment of amounts due pursuant to the terms of their subcontracts with small business concerns, HUBZone small business concerns, small business concerns owned and controlled by socially and economically disadvantaged individuals and small business concerns owned and controlled by women.

(b) The Contractor hereby agrees to carry out this policy in the awarding of subcontracts to the fullest extent consistent with efficient contract performance. The Contractor further agrees to cooperate in any studies or surveys as may be conducted by the United States Small Business Administration or the awarding agency of the United States as may be necessary to determine the extent of the Contractor's compliance with this clause.

(c) Definitions. As used in this contract—

(1) "Small business concern" means a small business as defined pursuant to section 3 of the Small Business Act and relevant regulations promulgated pursuant thereto.

(2) HUBZone small business concern means a small business concern that appears on the List of Qualified HUBZone Small Business Concerns maintained by the Small Business Administration.

(3) Small business concerns owned and controlled by socially and economically disadvantaged individuals means a small business concern that represents as part of its offer, that it meets the definition of a small disadvantaged business concern in 13 CFR 124.1002.

(4) "Small business concern owned and controlled by women" means a small business concern –

(i) Which is at least 51 percent owned by one or more women, or, in the case of any publicly owned business, at least 51 percent of the stock of which is owned by one or more women, and

(ii) Whose management and daily business operations are controlled by one or more women; and

(d)Contractors acting in good faith may rely on written representations by their subcontractors regarding their status as a small business concern, a HUBZone small business concern, a small business concern owned and controlled by socially and economically disadvantaged individuals or a small business concern owned and controlled by women.

(End of clause)

28. SMALL BUSINES SUBCONTRACTING PLAN (JAN 1999) FAR 52.219-9

NOTE: This clause applies to negotiated solicitations over $1,000,000.00. See also FAR 52.219-9 II below

(a) This clause does not apply to small business concerns.

(b) Definitions. As used in this clause—

"Commercial item" means a product or service that satisfies the definition of commercial item in section 2.101 of the Federal Acquisition Regulation.

"Commercial plan" means a subcontracting plan (including goals) that covers the offeror's fiscal year and that applies to the entire production of commercial items sold by either the entire company or a portion thereof (e.g., division, plant, or product line).

"Individual contract plan" means a subcontracting plan that covers the entire contract period (including option periods), applies to a specific contract, and has goals that are based on the offeror's planned subcontracting in support of the specific contract, except that indirect costs incurred for common or joint purposes may be allocated on a prorated basis to the contract.

"Master plan" means a subcontracting plan that contains all the required elements of an individual contract plan, except goals, and may be incorporated into individual contract plans, provided the master plan has been approved.

"Subcontract" means any agreement (other than one involving an employer-employee relationship) entered into by a Federal Government prime Contractor or subcontractor calling for supplies or services required for performance of the contract or subcontract.

(c) The offeror, upon request by the Contracting Officer, shall submit and negotiate a subcontracting plan, where applicable, which separately addresses subcontracting with small business, HUBZone small business, with small disadvantaged business, and with women-owned small business concerns. If the offeror is submitting an individual contract plan, the plan must separately address subcontracting with small business, HUBZone small business, small disadvantaged business, and women-owned small business concerns with a separate part for the basic contract and separate parts for each option (if any). The plan shall be included in and made a part of the resultant contract. The subcontracting plan shall be negotiated within the time specified by the Contracting Officer. Failure to submit and negotiate the subcontracting plan shall make the offeror ineligible for award of a contract.

(d) The offeror's subcontracting plan shall include the following:

(1) Goals, expressed in terms of percentages of total planned subcontracting dollars, for the use of small business, HUBZone small business, small disadvantaged business, and women-owned small business concerns as subcontractors. The offeror shall include all subcontracts that contribute to contract performance, and may include a proportionate share of products and services that are normally allocated as indirect costs.

(2) A statement of--

(i) Total dollars planned to be subcontracted for an individual contract plan; or the offeror's total projected sales, expressed in dollars, and the total value of projected subcontracts to support the sales for a commercial plan;

(ii) Total dollars planned to be subcontracted to small business concerns;

(iii) Total dollars planned to be subcontracted to HUBZone small business concerns;

(iv) Total dollars planned to be subcontracted to small disadvantaged business concerns; and

(v) Total dollars planned to be subcontracted to women-owned small business concerns.

(3) A description of the principal types of supplies and services to be subcontracted, and an identification of the types planned for subcontracting to—

(i) Small business concerns;

(ii) HUBZone small business concerns;

(iii) Small disadvantaged business concerns; and

(iv) Women-owned small business concerns.

(4) A description of the method used to develop the subcontracting goals in paragraph (d)(1) of this clause.

(5) A description of the method used to identify potential sources for solicitation purposes (e.g., existing company source lists, the Procurement Marketing and Access Network (PRO-Net) of the Small Business Administration (SBA), the list of certified small disadvantaged business concerns of the SBA, the National Minority Purchasing Council Vendor Information Service, the Research and Information Division of the Minority Business Development Agency in the Department of Commerce, or small, HUBZone small, small disadvantaged and women-owned small business concerns trade associations). A firm may rely on the information contained in PRO-Net as an accurate representation of a concern's size and ownership characteristics for purposes of maintaining a small and women-owned small business source list. A firm shall rely on the information contained in SBA's list of small disadvantaged business concerns as an accurate representation of a concern's size and ownership characteristics for the purpose of maintaining a small disadvantaged business source list. Use of PRO-Net and/or the SBA list of small disadvantaged business concerns as its source lists does not relieve a firm of its responsibilities (e.g., outreach, assistance, counseling, publicizing subcontracting opportunities) in this clause.

(6) A statement as to whether or not the offeror included indirect costs in establishing subcontracting goals, and a description of the method used to determine the proportionate share of indirect costs to be incurred with—

(i) Small business concerns;

(ii) HUBZone small business concerns;

(iii) Small disadvantaged business concerns; and

(iv) Women-owned small business concerns.

(7) The name of the individual employed by the offeror who will administer the offeror's subcontracting program, and a description of the duties of the individual.

(8) A description of the efforts the offeror will make to assure that small business, HUBZone small business, small disadvantaged business, and women-owned small business concerns have an equitable opportunity to compete for subcontracts.

(9) Assurances that the offeror will include the clause of this contract entitled "Utilization of Small Business Concerns" in all subcontracts that offer further subcontracting opportunities, and that the offeror will require all subcontractors (except small business concerns) who receive subcontracts in excess of $500,000 ($1,000,000 for construction of any public facility) to adopt a subcontracting plan that complies with the requirements of this clause.

(10) Assurances that the offeror will—

(i) Cooperate in any studies or surveys as may be required;

(ii) Submit periodic reports so that the Government can determine the extent of compliance by the offeror with the subcontracting plan;

(iii) Submit Standard Form (SF) 294, Subcontracting Report for Individual Contracts, and/or SF 295, Summary Subcontract Report, in accordance with the instructions on the forms or as provided in agency regulations and in paragraph (j) of this clause; and

(iv) Ensure that its subcontractors agree to submit SF 294 and 295.

(11) A description of the types of records that will be maintained concerning procedures that have been adopted to comply with the requirements and goals in the plan, including establishing source lists; and a description of the offeror's efforts to locate small business, HUBZone small business, small disadvantaged business, and women-owned small business concerns and award subcontracts to them. The records shall include at least the following (on a plant-wide or company-wide basis, unless otherwise indicated):

(i) Source lists (e.g., PRO-Net), guides, and other data that identify small business, HUBZone small business, small disadvantaged business, and women-owned small business concerns.

(ii) Organizations contacted in an attempt to locate sources that are small business, HUBZone small business, small disadvantaged business, or women-owned small business concerns.

(iii) Records on each subcontract solicitation resulting in an award of more than $100,000, indicating—

(A) Whether small business concerns were solicited and if not, why not;

(B) Whether HUBZone small business concerns were solicited and, if not why not;

(C) Whether small disadvantaged business concerns were solicited and if not, why not,

(D) Whether women-owned small business concerns were solicited and if not, why not; and

(E) If applicable, the reason award was not made to a small business concern.

(iv) Records of any outreach efforts to contact –

(A) Trade associations;

(B) Business development organizations; and

(C) Conferences and trade fairs to locate small, HUBZone small, small disadvantaged and women-owned small business sources.

(v) Records of internal guidance and encouragement provided to buyers through—

(A) Workshops, seminars, training, etc., and

(B) Monitoring performance to evaluate compliance with the program's requirements.

(vi) On a contract-by-contract basis, records to support award data submitted by the offeror to the Government, including the name, address, and business size of each subcontractor. Contractors having commercial plans need to comply with this requirement.

(e) In order to effectively implement this plan to the extent consistent with efficient contract performance, the Contractor shall perform the following functions:

(1) Assist small business, HUBZone small business, small disadvantaged business and women-owned small business concerns by arranging solicitations, time for the preparation of bids, quantities, specifications, and delivery schedules so as to facilitate the participation by such concerns. Where the Contractor's lists of potential small business, HUBZone small business, small disadvantaged business, and women-owned small business subcontractors are excessively long, reasonable effort shall be made to give all such small business concerns an opportunity to compete over a period of time.

(2) Provide adequate and timely consideration of the potentialities of small business, HUBZone small business, small disadvantaged business, and women-owned small business concerns in all "make-or-buy" decisions.

(3) Counsel and discuss subcontracting opportunities with representative of small business, HUBZone small business, small disadvantaged business, and women-owned small business firms.

(4) Provide notice to subcontractors concerning penalties and remedies for misrepresentations of business status as small business, HUBZone small business, small disadvantaged business, or women-owned small business for the purpose of obtaining a subcontract that is to be included as part or all of a goal contained in the Contractor's subcontracting plan.

(f) A master plan on a plant or division-wide basis that contains all the elements required by paragraph (d) of this clause, except goals, may be incorporated by reference as a part of the subcontracting plan required of the offeror by this clause; provided—

(1) The master plan has been approved

(2) The offeror ensures that the master plan is updated as necessary and provides copies of the approved master plan, including evidence of its approval, to the Contracting Officer; and

(3) Goals and any deviations from the master plan deemed necessary by the Contacting Officer to satisfy the requirements of this contract are set forth in the individual subcontracting plan.

(g) A commercial plan is the preferred type of subcontracting plan for contractors furnishing commercial items. The commercial shall plan relate to the offeror's planned subcontracting generally, for both commercial and Government business, rather than solely to the Government contract. Commercial plans are also preferred for subcontractors that provide commercial items under a prime contract, whether or not the prime contractor is supplying a commercial item.

(h) Prior compliance of the offeror with other such subcontracting plans under previous contracts will be considered by the Contracting Officer in determining the responsibility of the offeror for award of the contract.

(i) The failure of the Contractor or subcontractor to comply in good faith with –

(1) The clause of this contract entitled "Utilization of Small Business Concerns;" or

(2) An approved plan required by this clause, shall be a material breach of the contract.

(j) The Contractor shall submit the following reports:

(1) Standard Form 294, Subcontracting Report for Individual Contracts. This report shall be submitted to the Contracting Officer semiannually and at contract completion. The report covers subcontract award data related to this contract. This report is not required for commercial plans.

(2) Standard Form 295, Summary Subcontract Report. This report encompasses all the contracts with the awarding agency. It must be submitted semi-annually for contracts with the Department of Defense and annually for contracts with civilian agencies. If the reporting activity is covered by a commercial plan, the reporting activity must report annually all subcontract awards under that plan. All reports submitted at the close of each fiscal year (both individual and commercial plans) shall include a breakout, in the Contractor's format, of subcontract awards, in whole dollars, to small disadvantaged business concerns by Standard Industrial Classification (SIC) Major Group. For a commercial plan, the Contractor may obtain from each of its subcontractors a predominant SIC Major Group and report all awards to that subcontractor under its predominant SIC Major Group.

(End of clause)

29. SMALL BUSINESS SUBCONTRACTING PLAN (JAN 1999) ALTERNATE I (JAN 1999) FAR 52.219-9 I

NOTE: This clause applies only to sealed-bid solicitations over $1,000,000.00.

(a) This clause does not apply to small business concerns.

(b) Definitions. As used in this clause—

"Commercial item" means a product or service that satisfies the definition of commercial item in section 2.101 of the Federal Acquisition Regulation.

"Commercial plan" means a subcontracting plan (including goals) that covers the offeror's fiscal year and that applies to the entire production of commercial items sold by either the entire company or a portion thereof (e.g., division, plant, or product line).

"Individual contract plan" means a subcontracting plan that covers the entire contract period (including option periods), applies to a specific contract, and has goals that are based on the offeror's planned subcontracting in support of the specific contract, except that indirect costs incurred for common or joint purposes may be allocated on a prorated basis to the contract.

"Master plan" means a subcontracting plan that contains all the required elements of an individual contract plan, except goals, and may be incorporated into individual contract plans, provided the master plan has been approved.

"Subcontract" means any agreement (other than one involving an employer-employee relationship) entered into by a Federal Government prime Contractor or subcontractor calling for supplies or services required for performance of the contract or subcontract.

(c) The apparent low bidder, upon request by the Contracting Officer, shall submit a subcontracting plan, where applicable, which separately addresses subcontracting with small business, HUBZone small business, small disadvantaged business, and women-owned small business concerns. If the bidder is submitting an individual contract plan, the plan must separately address subcontracting with small business, HUBZone small business, small disadvantaged business, and women-owned small business concerns, with a separate part for the basic contract and separate parts for each option (if any). The plan shall be included in and made a part of the resultant contract. The subcontracting plan shall be submitted within the time specified by the Contracting Officer. Failure to submit the subcontracting plan shall make the bidder ineligible for the award of a contract.

(d) The offeror's subcontracting plan shall include the following:

(1) Goals, expressed in terms of percentages of total planned subcontracting dollars, for the use of small business, HUBZone small business, small disadvantaged business and women-owned small business concerns as subcontractors. The offeror shall include all subcontracts that contribute to contract performance, and may include a proportionate share of products and services that are normally allocated as indirect costs.

(2) A statement of--

(i) Total dollars planned to be subcontracted for an individual contract plan; or the offeror's total projected sales, expressed in dollars, and the total value of projected subcontractor to support the sales for a commercial plan;

(ii) Total dollars planned to be subcontracted to small business concerns;

(iii) Total dollars planned to be subcontracted to HUBZone small business concerns;

(iv) Total dollars planned to be subcontracted to small disadvantaged business concerns; and

(v) Total dollars planned to be subcontracted to women-owned small business concerns.

(3) A description of the principal types of supplies and services to be subcontracted, and an identification of the types planned for subcontracting to—

(i) Small business concerns;

(ii) HUBZone small business concerns;

(iii) Small disadvantaged business concerns; and

(iv) Women-owned small business concerns.

(4) A description of the method used to develop the subcontracting goals in paragraph (d)(1) of this clause.

(5) A description of the method used to identify potential sources for solicitation purposes (e.g., existing company source lists, the Procurement Marketing and Access Network (PRO-Net) of the Small Business Administration (SBA), the list of certified small disadvantaged business concerns of the SBA, the National Minority Purchasing Council Vendor Information Service, the Research and Information Division of the Minority Business Development Agency in the Department of Commerce, or small, HUBZone small, small disadvantaged and women-owned small business concerns trade associations). A firm may rely on the information contained in PRO-Net as an accurate representation of a concern's size and ownership characteristics for purposes of maintaining a small and women-owned small business source list. A firm shall rely on the information contained in SBA's list of small disadvantaged business concerns as an accurate representation of a concern's size and ownership characteristics for the purpose of maintaining a small disadvantaged business source list. Use of PRO-Net and/or the SBA list of small disadvantaged business concerns as its source lists does not relieve a firm of its responsibilities (e.g., outreach, assistance, counseling, publicizing subcontracting opportunities) in this clause.

(6) A statement as to whether or not the offeror included indirect costs in establishing subcontracting goals, and a description of the method used to determine the proportionate share of indirect costs to be incurred with—

(i) Small business concerns;

(ii) HUBZone small business concerns;

(iii) Small disadvantaged business concerns; and

(iv) Women-owned small business concerns.

(7) The name of the individual employed by the offeror who will administer the offeror's subcontracting program, and a description of the duties of the individual.

(8) A description of the efforts the offeror will make to assure that small business, HUBZone small business, small disadvantaged business, and women-owned small business concerns have an equitable opportunity to compete for subcontracts.

(9) Assurances that the offeror will include the clause of this contract entitled "Utilization of Small Business Concerns" in all subcontracts that offer further subcontracting opportunities, and that the offeror will require all subcontractors (except small business concerns) who receive subcontracts in excess of $500,000 ($1,000,000 for construction of any public facility) to adopt a subcontracting plan that complies with the requirements of this clause.

(10) Assurances that the offeror will—

(i) Cooperate in any studies or surveys as may be required;

(ii) Submit periodic reports so that the Government can determine the extent of compliance by the offeror with the subcontracting plan;

(iii) Submit Standard Form (SF) 294, Subcontracting Report for Individual Contracts, and/or SF 295, Summary Subcontract Report, in accordance with the instructions on the forms or as provided in agency regulations and in paragraph (j) of this clause; and

(iv) Ensure that its subcontractors agree to submit SF 294 and 295.

(11) A description of the types of records that will be maintained concerning procedures that have been adopted to comply with the requirements and goals in the plan, including establishing source lists; and a description of the offeror's efforts to locate small business, HUBZone small business, small disadvantaged business, and women-owned small business concerns and award subcontracts to them. The records shall include at least the following (on a plant-wide or company-wide basis, unless otherwise indicated):

(i) Source lists (e.g., PRO-Net), guides, and other data that identify small business, HUBZone small business, small disadvantaged business, and women-owned small business concerns.

(ii) Organizations contacted in an attempt to locate sources that are small business, HUBZone small business, small disadvantaged business, or women-owned small business concerns.

(iii) Records on each subcontract solicitation resulting in an award of more than $100,000, indicating –

(A) Whether small business concerns were solicited and if not, why not;

(B) Whether HUBZone small business concerns were solicited and, if not, why not;

(C) Whether small disadvantaged business concerns were solicited and if not, why not;

(D) Whether women-owned small business concerns were solicited and if not, why not; and

(E) If applicable, the reason award was not made to a small business concern.

(iv) Records of any outreach efforts to contact –

(A) Trade associations;

(B) Business development organizations; and

(C) Conferences and trade fairs to locate small, HUBZone small, small disadvantaged and women-owned small business sources.

(v) Records of internal guidance and encouragement provided to buyers through –

(A)Workshops, seminars, training, etc., and

(B) Monitoring performance to evaluate compliance with the program's requirements.

(vi) On a contract-by-contract basis, records to support award data submitted by the offeror to the Government, including the name, address, and business size of each subcontractor. Contractors having commercial plans need not comply with this requirement.

(e) In order to effectively implement this plan to the extent consistent with efficient contract performance, the Contractor shall perform the following functions:

(1) Assist small business, HUBZone small business, small disadvantaged business, and women-owned small business concerns by arranging solicitations, time for the preparation of bids, quantities, specifications, and delivery schedules so as to facilitate the participation by such concerns. Where the Contractor's lists of potential small business, HUBZone small business, small disadvantaged business, and women-owned small business subcontractors are excessively long, reasonable effort shall be made to give all such small business concerns an opportunity to compete over a period of time.

(2) Provide adequate and timely consideration of the potentialities of small business, HUBZone small business, small disadvantaged business, and women-owned small business concerns in all "make-or-buy" decisions.

(3) Counsel and discuss subcontracting opportunities with representative of small business, HUBZone small business, small disadvantaged business, and women-owned small business firms.

(4) Provide notice to subcontractors concerning penalties and remedies for misrepresentations of business status as small business, HUBZone small business, small disadvantaged business, or women-owned small business for the purpose of obtaining a subcontract that is to be included as part or all of a goal contained in the Contractor's subcontracting plan.

(f) A master plan on a plant or division-wide basis that contains all the elements required by paragraph (d) of this clause, except goals, may be incorporated by reference as a part of the subcontracting plan required of the offeror by this clause; provided—

(1) The master plan has been approved

(2) The offeror ensures that the master plan is updated as necessary and provides copies of the approved master plan, including evidence of its approval, to the Contracting Officer; and

(3) Goals and any deviations from the master plan deemed necessary by the Contacting Officer to satisfy the requirements of this contract are set forth in the individual subcontracting plan.

(g) A commercial plan is the preferred type of subcontracting plan for contractors furnishing commercial items. The commercial shall plan relate to the offeror's planned subcontracting generally, for both commercial and Government business, rather than solely to the Government contract. Commercial plans are also preferred for subcontractors that provide commercial items under a prime contract, whether or not the prime contractor is supplying a commercial item.

(h) Prior compliance of the offeror with other such subcontracting plans under previous contracts will be considered by the Contracting Officer in determining the responsibility of the offeror for award of the contract.

(i) The failure of the Contractor or subcontractor to comply in good faith with –

(1) The clause of this contract entitled "Utilization of Small Business Concerns," or

(2) An approved plan required by this clause, shall be a material breach of the contract.

(j) The Contractor shall submit the following reports:

(1) Standard Form 294, Subcontracting Report for Individual Contracts. This report shall be submitted to the Contracting Officer semiannually and at contract completion. The report covers subcontract award data related to this contract. This report is not required for commercial plans.

(2) Standard Form 295, Summary Subcontract Report. This report encompasses all the contracts with the awarding agency. It must be submitted semi-annually for contracts with the Department of Defense and annually for contracts with civilian agencies. If the reporting activity is covered by a commercial plan, the reporting activity must report annually all subcontract awards under that plan. All reports submitted at the close of each fiscal year (both individual and commercial plans) shall include a breakout, in the Contractor's format, of subcontract awards, in whole dollars, to small disadvantaged business concerns by Standard Industrial Classification (SIC) Major Group. For a commercial plan, the Contractor may obtain from each of its subcontractors a predominant SIC Major Group and report all awards to that subcontractor under its predominant SIC Major Group.

(End of clause)

30. SMALL BUSINESS SUBCONTRACTING PLAN (JAN 1999) ALTERNATE II (JAN 1999) FAR 52.219-9 II

NOTE: This clause applies only to negotiated solicitations over $1,000,000, when a subcontracting plan is required with the initial proposal as described in Sections 00110 & 00115.

(a) This clause does not apply to small business concerns.

(b) Definitions. As used in this clause—

"Commercial item" means a product or service that satisfies the definition of commercial item in section 2.101 of the Federal Acquisition Regulation.

"Commercial plan" means a subcontracting plan (including goals) that covers the offeror's fiscal year and that applies to the entire production of commercial items sold by either the entire company or a portion thereof (e.g., division, plant, or product line).

"Individual contract plan" means a subcontracting plan that covers the entire contract period (including option periods), applies to a specific contract, and has goals that are based on the offeror's planned subcontracting in support of the specific contract, except that indirect costs incurred for common or joint purposes may be allocated on a prorated basis to the contract.

"Master plan" means a subcontracting plan that contains all the required elements of an individual contract plan, except goals, and may be incorporated into individual contract plans, provided the master plan has been approved.

"Subcontract" means any agreement (other than one involving an employer-employee relationship) entered into by a Federal Government prime Contractor or subcontractor calling for supplies or services required for performance of the contract or subcontract.

(c) Proposals submitted in response to this solicitation shall include a subcontracting plan, which separately addresses subcontracting with small business, HUBZone small business, small disadvantaged business, and women-owned small business concerns. If the offeror is submitting an individual contract plan, the plan must separately address subcontracting with small business, HUBZone small business, small disadvantaged business, and women-owned small business concerns with a separate part for the basic contract and separate parts for each option (if any). The plan shall be included in and made a part of the resultant contract. The subcontracting plan shall be negotiated within the time specified by the Contracting Officer. Failure to submit and negotiate a subcontracting plan shall make the offeror ineligible for award of a contract.

(d) The offeror's subcontracting plan shall include the following:

(1) Goals, expressed in terms of percentages of total planned subcontracting dollars, for the use of small business, HUBZone small business, small disadvantaged business, and women-owned small business concerns as

subcontractors. The offeror shall include all subcontracts that contribute to contract performance, and may include a proportionate share of products and services that are normally allocated as indirect costs.

(2) A statement of--

(i) Total dollars planned to be subcontracted for an individual contract plan; or the offeror's total projected sales, expressed in dollars, and the total value of projected subcontracts to support the sales for a commercial plan;

(ii) Total dollars planned to be subcontracted to small business concerns;

(iii) Total dollars planned to be subcontracted to HUBZone small business concerns;

(iv) Total dollars planned to be subcontracted to small disadvantaged business concerns; and

(v) Total dollars planned to be subcontracted to women-owned small business concerns.

(3) A description of the principal types of supplies and services to be subcontracted, and an identification of the types planned for subcontracting to—

(i) Small business concerns;

(ii) HUBZone small business concerns;

(iii) Small disadvantaged business concerns; and

(iv) Women-owned small business concerns.

(4) A description of the method used to develop the subcontracting goals in paragraph (d)(1) of this clause.

(5) A description of the method used to identify potential sources for solicitation purposes (e.g., existing company source lists, the Procurement Marketing and Access Network (PRO-Net of the Small Business Administration (SBA), the list of certified small disadvantaged business concerns of the SBA, the National Minority Purchasing Council Vendor Information Service, the Research and Information Division of the Minority Business Development Agency in the Department of Commerce, or small business, HUBZone small, small disadvantaged, and women-owned small business concerns trade associations). A firm may rely on the information contained in PRO-Net as an accurate representation of a concern's size and ownership characteristics for purposes of maintaining a small and women-owned small business source list. A firm shall rely on the information contained in SBA's list of small disadvantaged business concerns as an accurate representation of a concern's size and ownership characteristics for the purpose of maintaining a small disadvantaged business source list. Use of PRO-Net and/or the SBA list of small disadvantaged business concerns as its source lists does not relieve a firm of its responsibilities (e.g., outreach, assistance, counseling, publicizing subcontracting opportunities) in this clause.

(6) A statement as to whether or not the offeror included indirect costs in establishing subcontracting goals, and a description of the method used to determine the proportionate share of indirect costs to be incurred with –

(i) Small business concerns,

(ii) HUBZone small business concerns;

(iii) Small disadvantaged business concerns, and

(iv) women-owned small business concerns.

(7) The name of the individual employed by the offeror who will administer the offeror's subcontracting program, and a description of the duties of the individual.

(8) A description of the efforts the offeror will make to assure that small business, HUBZone small business, small disadvantaged business, and women-owned small business concerns have an equitable opportunity to compete for subcontracts.

(9) Assurances that the offeror will include the clause of this contract entitled "Utilization of Small Business Concerns" in all subcontracts that offer further subcontracting opportunities, and that the offeror will require all subcontractors (except small business concerns) who receive subcontracts in excess of $500,000 ($1,000,000 for construction of any public facility) to adopt a subcontracting plan that complies with the requirements of this clause.

(10) Assurances that the offeror will—

(i) Cooperate in any studies or surveys as may be required;

(ii) Submit periodic reports so that the Government can determine the extent of compliance by the offeror with the subcontracting plan;

(iii) Submit Standard Form (SF) 294, Subcontracting Report for Individual Contracts, and/or SF 295, Summary Subcontract Report, in accordance with the instructions on the forms or as provided in agency regulations and in paragraph (j) of this clause; and

(iv) Ensure that its subcontractors agree to submit SF 294 and 295.

(11) A description of the types of records that will be maintained concerning procedures that have been adopted to comply with the requirements and goals in the plan, including establishing source lists; and a description of the offeror's efforts to locate small business, HUBZone small business, small disadvantaged business, and women-owned small business concerns and award subcontracts to them. The records shall include at least the following (on a plant-wide or company-wide basis, unless otherwise indicated):

(i) Source lists (e.g., PRO-Net), guides, and other data that identify small business, HUBZone small business, small disadvantaged business, d and women-owned small business concerns.

(ii) Organizations contacted in an attempt to locate sources that small business, HUBZone small business, small disadvantaged business, or women-owned small business concerns.

(iii) Records on each subcontract solicitation resulting in an award of more than $100,000, indicating—

(A) Whether small business concerns were solicited and if not, why not,

(B) Whether HUBZone small business concerns were solicited and, if not, why not;

(C) Whether small disadvantaged business concerns were solicited and if not, why not,

(D) Whether women-owned small business concerns were solicited and if not, why not, and

(E) If applicable, the reason award was not made to a small business concern.

(iv) Records of any outreach efforts to contact—

(A) Trade associations,

(B) Business development organizations, and

(C) conferences and trade fairs to locate small business, HUBZone small business, small disadvantaged business, and women-owned small business sources.

(v) Records of internal guidance and encouragement provided to buyers through –

(A) Workshops, seminars, training, etc., and

(B) Monitoring performance to evaluate compliance with the program's requirements.

(vi) On a contract-by-contract basis, records to support award data submitted by the offeror to the Government, including the name, address, and business size of each subcontractor. Contractors having commercial plans need not comply with this requirement.

(e) In order to effectively implement this plan to the extent consistent with efficient contract performance, the Contractor shall perform the following functions:

(1) Assist small business, HUBZone small business, small disadvantaged business, and women-owned small business concerns by arranging solicitations, time for the preparation of bids, quantities, specifications, and delivery schedules so as to facilitate the participation by such concerns. Where the Contractor's lists of potential small business, HUBZone small business, small disadvantaged business, and women-owned small business subcontractors are excessively long, reasonable effort shall be made to give all such small business concerns an opportunity to compete over a period of time.

(2) Provide adequate and timely consideration of the potentialities of small business, HUBZone small business, small disadvantaged business, and women-owned small business concerns in all "make-or-buy" decisions.

(3) Counsel and discuss subcontracting opportunities with representative of small business, HUBZone small business, small disadvantaged business, and women-owned small business firms.

(4) Provide notice to subcontractors concerning penalties and remedies for misrepresentations of business status as small business, HUBZone small business, small disadvantaged business, or women-owned small business for the purpose of obtaining a subcontract that is to be included as part or all of a goal contained in the Contractor's subcontracting plan.

(f) A master plan on a plant or division-wide basis that contains all the elements required by paragraph (d) of this clause, except goals may be incorporated by reference as a part of the subcontracting plan required of the offeror by this clause; provided—

(1) The master plan has been approved;

(2) The offeror ensures that the master plan is updated as necessary and provides copies of the approved master plan, including evidence of its approval, to the Contracting Officer; and

(3) Goals and any deviations from the master plan deemed necessary by the Contacting Officer to satisfy the requirements of this contract are set forth in the individual subcontracting plan.

(g) A commercial plan is the preferred type of subcontracting plan for contractors furnishing commercial items. The commercial shall plan relate to the offeror's planned subcontracting generally, for both commercial and Government business, rather than solely to the Government contract. Commercial plans are also preferred for subcontractors that provide commercial items under a prime contract, whether or not the prime contractor is supplying a commercial item.

(h) Prior compliance of the offeror with other such subcontracting plans under previous contracts will be considered by the Contracting Officer in determining the responsibility of the offeror for award of the contract.

(i) The failure of the Contractor or subcontractor to comply in good faith with –

(1) The clause of this contract entitled "Utilization of Small Business Concerns," or

(2) An approved plan required by this clause, shall be a material breach of the contract.

(j) The Contractor shall submit the following reports:

(1) Standard Form 294, Subcontracting Report for Individual Contracts. This report shall be submitted to the Contracting Officer semiannually and at contract completion. The report covers subcontract award data related to this contract. This report is not required for commercial plans.

(2) Standard Form 295, Summary Subcontract Report. This report encompasses all the contracts with the awarding agency. It must be submitted semi-annually for contracts with the Department of Defense and annually for contracts with civilian agencies. If the reporting activity is covered by a commercial plan, the reporting activity must report annually all subcontract awards under that plan. All reports submitted at the close of each fiscal year (both individual and commercial plans) shall include a breakout, in the Contractor's format, of subcontract awards, in whole dollars, to small disadvantaged business concerns by Standard Industrial Classification (SIC) Major Group. For a commercial plan, the Contractor may obtain from each of its subcontractors a predominant SIC Major Group and report all awards to that subcontractor under its predominant SIC Major Group.

(End of clause)

31. LIMITATIONS ON SUBCONTRACTING (DEC 1996) FAR 52.219-14

NOTE: This clause applies only if the contract, or any portion of the contract is set-aside for small business or set-aside for the 8(a) program.

(a) This clause does not apply to the unrestricted portion of a partial set-aside.

(b) By submission of an offer and execution of a contract, the Offeror/Contractor agrees that in performance of the contract in the case of a contract for--

(1) *Services (except construction)*. At least 50 percent of the cost of contract performance incurred for personnel shall be expended for employees of the concern.

(2) *Supplies (other than procurement from a nonmanufacturer of such supplies)*. The concern shall perform work for at least 50 percent of the cost of manufacturing the supplies, not including the cost of materials.

(3) *General construction*. The concern will perform at least 15 percent of the cost of the contract, not including the cost of materials, with its own employees.

(4) *Construction by special trade contractors*. The concern will perform at least 25 percent of the cost of the contract, not including the cost of materials, with its own employees.

(End of clause)

32. LIQUIDATED DAMAGES--SUBCONTRACTING PLAN (JAN 1999) FAR 52.219-16

(a) "Failure to make a good faith effort to comply with the subcontracting plan", as used in this clause, means a willful or intentional failure to perform in accordance with the requirements of the subcontracting plan approved under the clause in this contract entitled "Small Business Subcontracting Plan," or willful or intentional action to frustrate the plan.

(b) Performance shall be measured by applying the percentage goals to the total actual subcontracting dollars or, if a commercial plan is involved, to the pro rata share of actual subcontracting dollars attributable to Government contracts covered by the commercial plan. If, at contract completion, or in the case of a commercial product plan, at the close of the fiscal year for which the plan is applicable, the Contractor has failed to meet its subcontracting goals and the Contracting Officer decides in accordance with paragraph (c) of this clause that the Contractor failed to make a good faith effort to comply with its subcontracting plan, established in accordance with the clause in this contract entitled "Small Business Subcontracting Plan," the Contractor shall pay the Government liquidated damages in an amount stated. The amount of probable damages attributable to the Contractor's failure to comply, shall be an amount equal to the actual dollar amount by which the Contractor failed to achieve each subcontract goal or, in the case of a commercial products plan, that portion of the dollar amount allocable to Government contracts by which the Contractor failed to achieve each subcontract goal.

(c) Before the Contracting Officer makes a final decision that the Contractor has failed to make such good faith effort, the Contracting Officer shall give the Contractor written notice specifying the failure and permitting the Contractor to demonstrate what good faith efforts have been made and to discuss the matter. Failure to respond to the notice may be taken as an admission that no valid explanation exists. If, after consideration of all pertinent data, the Contracting Officer finds that the Contractor failed to make a good faith effort to comply with the subcontracting plan, the Contracting Officer shall issue a final decision to that effect and require that the Contractor pay the Government liquidated damages as provided in paragraph (b) of this clause.

(d) With respect to commercial plans, the Contracting Officer approved the plan will perform the functions of the Contracting Officer under this clause on behalf of all agencies that awarded contracts covered by that commercial product plan.

(e) The Contractor shall have the right of appeal, under the clause in this contract entitled, Disputes, from any final decision of the Contracting Officer.

(f) Liquidated damages shall be in addition to any other remedies that the Government may have.

(End of clause)

33. SMALL, SMALL DISADVANTAGED AND WOMEN-OWNED SMALL BUSINESS SUBCONTRACTING PLAN (DoD CONTRACTS) (APR 1996) DFARS 252.219-7003

This clause supplements the Federal Acquisition Regulation 52.219-9, Small, Small Disadvantaged and Women-Owned Small Business Subcontracting Plan, clause of this contract.

(a) *Definitions*.

"Historically black colleges and universities," as used in this clause, means institutions determined by the Secretary of Education to meet the requirements of 34 CFR Section 608.2. The term also means any nonprofit research institution that was an integral part of such a college or university before November 14, 1986.

"Minority institutions," as used in this clause, means institutions meeting the requirement of Section 1046(3) of the Higher Education Act of 1965 (20 U.S.C. 1135d-5(3)). The term also includes Hispanic-serving institutions as defined in Section 316(b)(1) of such Act (20 U.S.C. 1059c(b)(1)).

(b) Except for company or division-wide commercial items subcontracting plans, the term "small disadvantaged business," when used in the FAR 52.219-9 clause, includes historically black colleges and universities and minority institutions, in addition to small disadvantaged business concerns.

(c) Work under the contract or its subcontracts shall be credited toward meeting the small disadvantaged business concern goal required by paragraph (d) of the FAR 52.219-9 clause when:

(1) It is performed on Indian lands or in joint venture with an Indian tribe or a tribally-owned corporation, and

(2) It meets the requirements of 10 U.S.C. 2323a.

(d) Subcontracts awarded to workshops approved by the Committee for Purchase from People Who are Blind or Severely Disabled (41 U.S.C. 46-48), may be counted toward the Contractor's small business subcontracting goal.

(e) A mentor firm, under the Pilot Mentor-Protégé Program established under Section 831 of Pub. L. 101-510, as amended, may count toward its small disadvantaged business goal, subcontracts awarded--

(1) Protégé firms which are qualified organizations employing the severely handicapped; and

(2) Former protégé firms that meet the criteria in Section 831(g)(4) of Pub. L. 101-510.

(f) The master plan approval referred to in paragraph (f) of the FAR 52.219-9 clause is approval by the Contractor's cognizant contract administration activity.

(g) In those subcontracting plans which specifically identify small, small disadvantaged, and women-owned small businesses, the Contractor shall notify the Administrative Contracting Officer of any substitutions of firms that are not small, small disadvantaged, or women-owned small businesses for the firms listed in the subcontracting plan. Notifications shall be in writing and shall occur within a reasonable period of time after award of the subcontract. Contractor-specified formats shall be acceptable.

(End of clause)

34. NOTICE TO THE GOVERNMENT OF LABOR DISPUTES (FEB 1997) FAR 52.222-1

If the Contractor has knowledge that any actual or potential labor dispute is delaying or threatens to delay the timely performance of this contract, the Contractor shall immediate give notice, including all relevant information, to the Contracting Officer.

(End of clause)

35 CONVICT LABOR (AUG 1996) FAR 52.222-3

The Contractor agrees not to employ in the performance of this contract any person undergoing a sentence of imprisonment which has been imposed by any court of a State, the District of Columbia, the Commonwealth of Puerto Rico, the Virgin Islands, Guam, American Samoa, the Commonwealth of the Northern Mariana Islands, or the Trust Territory of the Pacific Islands. This limitation, however, shall not prohibit the employment by the Contractor in the performance of this contract of persons on parole or probation to work at paid employment during the term of their sentence or persons who have been pardoned or who have served their terms. Nor shall it prohibit the employment by the Contractor in the performance of this contract of persons confined for violation of the laws of any of the States, the District of Columbia, the Commonwealth of Puerto Rico, the Virgin Islands, Guam, American Samoa, the Commonwealth of the

Northern Mariana Islands, or the Trust Territory of the Pacific Islands who are authorized to work at paid employment in the community under the laws of such jurisdiction, if--

(a) (1) The worker is paid or is in an approved work training program on a voluntary basis;

(2) Representatives of local union central bodies or similar labor union organizations have been consulted;

(3) Such paid employment will not result in the displacement of employed workers, or be applied in skills, crafts, or trades in which there is a surplus of available gainful labor in the locality, or impair existing contracts for services;

(4) The rates of pay and other conditions of employment will not be less than those paid or provided for work of a similar nature in the locality in which the work is being performed; and

(b) The Attorney General of the United States has certified that the work-release laws or regulations of the jurisdiction involved are in conformity with the requirements of Executive Order 11755, as amended by Executive Orders 12608 and 12943.

(End of clause)

36. CONTRACT WORK HOURS AND SAFETY STANDARDS ACT--OVERTIME COMPENSATION (JUL 1995) FAR 52.222-4

(a) *Overtime requirements*. No Contractor or subcontractor contracting for any part of the contract work which may require or involve the employment of laborers or mechanics (see Federal Acquisition Regulation (FAR) 22.300) shall require or permit any such laborers or mechanics in any workweek in which the individual is employed on such work to work in excess of 40 hours in such workweek unless such laborer or mechanic receives compensation at a rate not less than 1-1/2 times the basic rate of pay for all hours worked in excess of 40 hours in such workweek.

(b) *Violation; liability for unpaid wages; liquidated damages*. In the event of any violation of the provisions set forth in paragraph (a) of this clause, the Contractor and any subcontractor responsible therefor shall be liable for the unpaid wages. In addition, such Contractor and subcontractor shall be liable to the United States (in the case of work done under contract for the District of Columbia or a territory, to such District or to such territory), for liquidated damages. Such liquidated damages shall be computed with respect to each individual laborer or mechanical employed in violation of the provisions set forth in paragraph (a) of this clause in the sum of $10 for each calendar day on which such individual was required or permitted to work in excess of the standard workweek of 40 hours without payment of the overtime wages required by provisions set forth in paragraph (a) of this clause.

(c) *Withholding for unpaid wages and liquidated damages*. The Contracting Officer shall upon his or her own action or upon written request of an authorized representative of the Department of Labor withhold or cause to be withheld, from any moneys payable on account of work performed by the Contractor or subcontractor under any such contract or any other Federal contract with the same Prime Contractor, or any other Federally-assisted contract subject to the Contract Work Hours and Safety Standards Act which is held by the same Prime Contractor, such sums as may be determined to be necessary to satisfy any liabilities of such Contractor or subcontractor for unpaid wages and liquidated damages as provided in the provisions set forth in paragraph (b) of this clause.

(d) *Payrolls and basic records*. (1) The Contractor or subcontractor shall maintain payrolls and basic payroll records during the course of contract work and shall preserve them for a period of 3 years from the completion of the contract for all laborers and mechanics working on the contract. Such records shall contain the name and address of each such employee, social security number, correct classifications, hourly rates of wages paid, daily and weekly number of hours worked, deductions made, and actual wages paid. Nothing in this paragraph shall require the duplication of records required to be maintained for construction work by Department of Labor regulations at 29 CFR 5.5(a)(3) implementing the Davis-Bacon Act.

(2) The records to be maintained under paragraph (d)(1) of this clause shall be made available by the Contractor or subcontractor for inspection, copying, or transcription by authorized representatives of the Contracting Officer or the Department of Labor. The Contractor or subcontractor shall permit such representatives to interview employees during working hours on the job.

(e) *Subcontracts*. The Contractor or subcontractor shall insert in any subcontracts exceeding $100,000 the provisions set forth in paragraphs (a) through (e) of this clause and also a clause requiring the subcontractors to include these provisions in any lower tier subcontracts. The Prime Contractor shall be responsible for compliance by any subcontractor or lower tier subcontractor with the provisions set forth in paragraphs (a) through (e) of this clause.

(End of clause)

37. DAVIS-BACON ACT (FEB 1995) FAR 52.222-6

(a) All laborers and mechanics employed or working upon the site of the work will be paid unconditionally and not less often than once a week, and without subsequent deduction or rebate on any account (except such payroll deductions as are permitted by regulations issued by the Secretary of Labor under the Copeland Act (29 CFR Part 3), the full amount of wages and bona fide fringe benefits (or cash equivalents thereof) due at time of payment computed at rates not less than those contained in the wage determination of the Secretary of Labor which is attached hereto and made a part hereof, regardless of any contractual relationship which may be alleged to exist between the Contractor and such laborers and mechanics. Contributions made or costs reasonably anticipated for bona fide fringe benefits under section 1(b)(2) of the Davis-Bacon Act on behalf of laborers or mechanics are considered wages paid to such laborers or mechanics, subject to the provisions of paragraph (d) of this clause; also, regular contributions made or costs incurred for more than a weekly period (but not less often than quarterly) under plans, funds, or programs which cover the particular weekly period, are deemed to be constructively made or incurred during such period. Such laborers and mechanics shall be paid not less than the appropriate wage rate and fringe benefits in the wage determination for the classification of work actually performed, without regard to skill, except as provided in the clause entitled Apprentices and Trainees. Laborers or mechanics performing work in more than one classification may be compensated at the rate specified for each classification for the time actually worked therein; provided, That the employer's payroll records accurately set forth the time spent in each classification in which work is performed. The wage determination (including any additional classifications and wage rates conformed under paragraph (b) of this clause) and the Davis-Bacon poster (WH-1321) shall be posted at all times by the Contractor and its subcontractors at the site of the work in a prominent and accessible place where it can be easily seen by the workers.

(b)(1) The Contracting Officer shall require that any class of laborers or mechanics which is not listed in the wage determination and which is to be employed under the contract shall be classified in conformance with the wage determination. The Contracting Officer shall approved an additional classification and wage rate and fringe benefits therefor only when all the following criteria have been met:

(i) The work to be performed by the classification requested is not performed by a classification in the wage determination.

(ii) The classification is utilized in the area by the construction industry.

(iii) The proposed wage rate, including any bona fide fringe benefits, bears a reasonable relationship to the wage rates contained in the wage determination.

(2) If the Contractor and the laborers and mechanics to be employed in the classification (if known), or their representatives, and the Contracting Officer agree on the classification and wage rate (including the amount designated for fringe benefits, where appropriate), a report of the action taken shall be sent by the Contracting Officer to the Administrator of the Wage and Hour Division, Employment Standards Administration, U.S. Department of Labor, Washington, DC 20210. The Administrator or an authorized representative will approve, modify, or disapprove every additional classification action within 30 days of receipt and so advise the Contracting Officer or will notify the Contracting Officer within the 30-day period that additional time is necessary.

(3) In the event the Contractor, the laborers or mechanics to be employed in the classification, or their representatives, and the Contracting Officer do not agree on the proposed classification and wage rate (including the amount designated for fringe benefits, where appropriate), the Contracting Officer shall refer the questions, including the views of all interested parties and the recommendation of the Contracting Officer, to the Administrator of the Wage and Hour Division for determination. The Administrator, or an authorized representative, will issue a determination within 30 days of receipt and so advise the Contracting Officer or will notify the Contracting Officer within the 30-day period that additional time is necessary.

(4) The wage rate (including fringe benefits, where appropriate) determined pursuant to subparagraphs (b)(2) and (b)(3) of this clause shall be paid to all workers performing work in the classification under this contract from the first day on which work is performed in the classification.

(c) Whenever the minimum wage rate prescribed in the contract for a class of laborers or mechanics includes a fringe benefit which is not expressed as an hourly rate, the Contractor shall either pay the benefit as stated in the wage determination or shall pay another bona fide fringe benefit or an hourly cash equivalent thereof.

(d) If the Contractor does not make payments to a trustee or other third person, the Contractor may consider as part of the wages of any laborer or mechanic the amount of any costs reasonably anticipated in providing bona fide fringe benefits under a plan or program; provided, That the Secretary of Labor has found, upon the written request of the Contractor, that the applicable standards of the Davis-Bacon Act have been met. The Secretary of Labor may require the Contractor to set aside in a separate account assets for the meeting of obligations under the plan or program.

(End of clause)

38. WITHHOLDING OF FUNDS (FEB 1988) FAR 52.222-7

The Contracting Officer shall, upon his or her own action or upon written request of an authorized representative of the Department of Labor, withhold or cause to be withheld from the Contractor under this contract or any other Federal contract with the same Prime Contractor, or any other Federally assisted contract subject to Davis-Bacon prevailing wage requirements, which is held by the same Prime Contractor, so much of the accrued payments or advances as may be considered necessary to pay laborers and mechanics, including apprentices, trainees, and helpers, employed by the Contractor or any subcontractor the full amount of wages required by the contract. In the event of failure to pay any laborer or mechanic, including any apprentice, trainee, or helper, employed or working on the site of the work, all or part of the wages required by the contract, the Contracting Officer may, after written notice to the Contractor, take such action as may be necessary to cause the suspension of any further payment, advance, or guarantee of funds until such violations have ceased.

(End of clause)

39. PAYROLLS AND BASIC RECORDS (FEB 1988) FAR 52.222-8

(a) Payrolls and basic records relating thereto shall be maintained by the Contractor during the course of the work and preserved for a period of 3 years thereafter for all laborers and mechanics working at the site of the work. Such records shall contain the name, address, and social security number of each such worker, his or her correct classification, hourly rates of wages paid (including rates of contributions or costs anticipated for bona fide fringe benefits or cash equivalents thereof of the types described in section 1(b)(2)(B) of the Davis-Bacon Act), daily and weekly number of hours worked, deductions made, and actual wages paid. Whenever the Secretary of Labor has found, under paragraph (d) of the clause entitled Davis-Bacon Act, that the wages of any laborer or mechanic include the amount of any costs reasonably anticipated in providing benefits under a plan or program described in section 1(b)(2)(B) of the Davis-Bacon Act, the Contractor shall maintain records which show that the commitment to provide such benefits is enforceable, that the plan or program is financially responsible, and that the plan or program has been communicated in writing to the laborers or mechanics affected, and records which show the costs anticipated or the actual cost incurred in providing such benefits. Contractors employing apprentices or trainees under approved programs shall maintain written evidence of the registration of apprenticeship programs and certification of trainee programs, the registration of the apprentices and trainees, and the ratios and wage rates prescribed in the applicable programs.

(b)(1) The Contractor shall submit weekly for each week in which any contract work is performed a copy of all payrolls to the Contracting Officer. The payrolls submitted shall set out accurately and completely all of the information required to be maintained under paragraph (a) of this clause. This information may be submitted in any form desired. Optional Form WH-347 (Federal Stock Number 029-005-00014-1) is available for this purpose and may be purchased from the Superintendent of Documents. U.S. Government Printing Office, Washington, DC 20402. The Prime Contractor is responsible for the submission of copies of payrolls by all subcontractors.

(2) Each payroll submitted shall be accompanied by a "Statement of Compliance," signed by the Contractor or subcontractor or his or her agent who pays or supervises the payment of the persons employed under the contract and shall certify--

(i) That the payroll for the payroll period contains the information required to be maintained under paragraph (a) of this clause and that such information is correct and complete;

(ii) That each laborer or mechanic (including each helper, apprentice, and trainee) employed on the contract during the payroll period has been paid the full weekly wages earned, without rebate, either directly or indirectly, and that no deductions have been made either directly or indirectly from the full wages earned, other than permissible deductions as set forth in the Regulations, 29 CFR Part 3; and

(iii) That each laborer or mechanic has been paid not less than the applicable wage rates and fringe benefits or cash equivalents for the classification of work performed, as specified in the applicable wage determination incorporated into the contract.

(3) The weekly submission of a properly executed certification set forth on the reverse side of Optional Form WH-347 shall satisfy the requirement for submission of the "Statement of Compliance" required by subparagraph (b)(2) of this clause.

(4) The falsification of any of the certifications in this clause may subject the Contractor or subcontractor to civil or criminal prosecution under Section 1001 of Title 18 and Section 3729 of Title 31 of the United States Code.

(c) The Contractor or subcontractor shall make the records required under paragraph (a) of this clause available for inspection, copying, or transcription by the Contracting Officer or authorized representatives of the Contracting Officer or the Department of Labor. The Contractor or subcontractor shall permit the Contracting Officer or representatives of the Contracting Officer or the Department of Labor to interview employees during working hours on the job. If the Contractor

or subcontractor fails to submit required records or to make them available, the Contracting Officer may, after written notice to the Contractor, take such action as may be necessary to cause the suspension of any further payment. Furthermore, failure to submit the required records upon request or to make such records available may be grounds for debarment action pursuant to 29 CFR 5.12.

(End of clause)

40. APPRENTICES AND TRAINEES (FEB 1988) FAR 52.222-9

(a) *Apprentices*. Apprentices will be permitted to work at less than the predetermined rate for the work they performed when they are employed pursuant to and individually registered in a bona fide apprenticeship program registered with the U.S. Department of Labor, Employment and Training Administration, Bureau of Apprenticeship and Training, or with a State Apprenticeship Agency recognized by the Bureau, or if a person is employed in his or her first 90 days of probationary employment as an apprentice in such an apprenticeship program, who is not individually registered in the program, but who has been certified by the Bureau of Apprenticeship and Training or a State Apprenticeship Agency (where appropriate) to be eligible for probationary employment as an apprentice. The allowable ratio of apprentices to journeymen on the job site in any craft classification shall not be greater than the ratio permitted to the Contractor as to the entire work force under the registered program. Any worker listed on a payroll at an apprentice wage rate, who is not registered or otherwise employed as stated in this paragraph, shall be paid not less than the applicable wage determination for the classification of work actually performed. In addition, any apprentice performing work on the job site in excess of the ratio permitted under the registered program shall be paid not less than the applicable wage rate on the wage determination for the work actually performed. Where a contractor is performing construction on a project in a locality other than that in which its program is registered, the ratios and wage rates (expressed in percentages of the journeyman's hourly rates) specified in the Contractor's or subcontractor's registered program shall be observed. Every apprentice must be paid at not less than the rate specified in the registered program for the apprentice's level of progress, expressed as a percentage of the journeyman hourly rate specified in the applicable wage determination. Apprentices shall be paid fringe benefits in accordance with the provisions of the apprenticeship program. If the apprenticeship program does not specify fringe benefits, apprentices must be paid the full amount of fringe benefits listed on the wage determination for the applicable classification. If the Administrator determines that a different practice prevails for the applicable apprentice classification, fringes shall be paid in accordance with that determination. In the event the Bureau of Apprenticeship and Training, or a State Apprenticeship Agency recognized by the Bureau, withdraws approval of an apprenticeship program, the Contractor will no longer be permitted to utilize apprentices at less than the applicable predetermined rate for the work performed until an acceptable program is approved.

(b) *Trainees*. Except as provided in 29 CFR 5.16, trainees will not be permitted to work at less than the predetermined rate for the work performed unless they are employed pursuant to and individually registered in a program which has received prior approval, evidenced by formal certification by the U.S. Department of Labor, Employment and Training Administration. The ratio of trainees to journeymen on the job site shall not be greater than permitted under the plan approved by the Employment and Training Administration. Every trainee must be paid at not less than the rate specified in the approved program for the trainee's level of progress, expressed as a percentage of the journeyman hourly rate specified in the applicable wage determination. Trainees shall be paid fringe benefits in accordance with the provisions of the trainee program. If the trainee program does not mention fringe benefits, trainees shall be paid the full amount of fringe benefits listed in the wage determination unless the Administrator of the Wage and Hour Division determines that there is an apprenticeship program associated with the corresponding journeyman wage rate in the wage determination which provides for less than full fringe benefits for apprentices. Any employee listed on the payroll at a trainee rate who is not registered and participating in a training plan approved by the Employment and Training Administration shall be paid not less than the applicable wage rate in the wage determination for the classification of work actually performed. In addition, any trainee performing work on the job site in excess of the ratio permitted under the registered program shall be paid not less than the applicable wage rate in the wage determination for the work actually performed. In the event the Employment and Training Administration withdraws approval of a training program, the Contractor will no longer be permitted to utilize trainees at less than the applicable predetermined rate for the work performed until an acceptable program is approved.

(c) *Equal employment opportunity*. The utilization of apprentices, trainees, and journeymen under this clause shall be in conformity with the equal employment opportunity requirements of Executive Order 11246, as amended, and 29 CFR Part 30.

(End of clause)

41. COMPLIANCE WITH COPELAND ACT REQUIREMENTS (FEB 1988) FAR 52.222-10

The Contractor shall comply with the requirements of 29 CFR Part 3, which are hereby incorporated by reference in this contract.

(End of clause)

42. SUBCONTRACTS (LABOR STANDARDS) (FEB 1988) FAR 52.222-11

(a) The Contractor or subcontractor shall insert in any subcontracts the clauses entitled *Davis-Bacon Act, Contract Work Hours and Safety Standards Act--Overtime Compensation, Apprentices and Trainees, Payrolls and Basic Records, Compliance with Copeland Act Requirements, Withholding of Funds, Subcontracts (Labor Standards), Contract Termination--Debarment, Disputes Concerning Labor Standards, Compliance with Davis-Bacon and Related Act Regulations, and Certification of Eligibility,* and such other clauses as the Contracting Officer may, by appropriate instructions, require, and also a clause requiring subcontractors to include these clauses in any lower tier subcontracts. The Prime Contractor shall be responsible for compliance by any subcontractor or lower tier subcontractor with all the contract clauses cited in this paragraph.

(b)(1) Within 14 days after award of the contract, the Contractor shall delivery to the Contracting Officer a completed Statement and Acknowledgment Form (SF 1413) for each subcontract, including the subcontractor's signed and dated acknowledgment that the clauses set forth in paragraph (a) of this clause have been included in the subcontract.

(2) Within 14 days after the award of any subsequently awarded subcontract the Contractor shall delivery to the Contracting Officer an updated completed SF 1413 for such additional subcontract.

(End of clause)

43. CONTRACT TERMINATION--DEBARMENT (FEB 1988) FAR 52.222-12

A breach of the contract clauses entitled *Davis-Bacon Act, Contract Work Hours and Safety Standards Act--Overtime Compensation, Apprentices and Trainees, Payrolls and Basic Records, Compliance with Copeland Act Requirements, Subcontracts (Labor Standards), Compliance with Davis-Bacon and Related Act Regulations, or Certification of Eligibility*, may be grounds for termination of the contract, and for debarment as a Contractor and subcontractor as provided in 29 CFR 5.12.

(End of clause)

44. COMPLIANCE WITH DAVIS-BACON AND RELATED ACT REGULATIONS (FEB 1988) FAR 52.222-13

All rulings and interpretations of the Davis-Bacon and Related Acts contained in 29 CFR Parts 1, 3, and 5 are hereby incorporated by reference in this contract.

(End of clause)

45. DISPUTES CONCERNING LABOR STANDARDS (FEB 1988) FAR 52.222-14

The United States Department of Labor has set forth in 29 CFR Parts 5, 6, and 7 procedures for resolving disputes concerning labor standards requirements. Such disputes shall be resolved in accordance with those procedures and not the Disputes clause of this contract. Disputes within the meaning of this clause include disputes between the Contractor (or any of its subcontractors) and the contracting agency, the U.S. Department of Labor, or the employees or their representatives.

(End of clause)

46. CERTIFICATION OF ELIGIBILITY (FEB 1988) FAR 52.222-15

(a) By entering into this contract, the Contractor certifies that neither it (nor he or she) nor any person or firm who has an interest in the Contractor's firm is a person or firm ineligible to be awarded Government contracts by virtue of section 3(a) of the Davis-Bacon Act or 29 CFR 5.12(a)(1).

(b) No part of this contract shall be subcontracted to any person or firm ineligible for award of a Government contract by virtue of section 3(a) of the Davis-Bacon Act or 29 CFR 5.12(a)(1).

(c) The penalty for making false statements is prescribed in the U.S. Criminal Code, 18 U.S.C. 1001.

(End of clause)

47. PROHIBITION OF SEGREGATED FACILITIES (FEB 1999) FAR 52.222-21

(a) "Segregated facilities," as used in this clause, means any waiting rooms, work areas, rest rooms and wash rooms, restaurants and other eating areas, time clocks, locker rooms and other storage or dressing areas, parking lots, drinking fountains, recreation or entertainment areas, transportation, and housing facilities provided for employees, that are segregated by explicit directive or are in fact segregated on the basis of race, color, religion, sex or national origin because of written or oral policies, or employee custom. The term does not include separate or single-user rest rooms and necessary dressing or sleeping areas, which shall be provided to assure privacy between the sexes.

(b) The Contractor agrees that it does not and will not maintain or provide for its employees any segregated facilities at any of its establishments, and that it does not and will not permit its employees to perform their services at any location under its control where segregated facilities are maintained. The Contractor agrees that a breach of this clause is a violation of the Equal Opportunity clause in this contract.

(c) The Contractor shall include this clause in every subcontract and purchase order that is subject to the Equal Opportunity clause of this contract.

(End of clause)

48. EQUAL OPPORTUNITY (FEB 1999) FAR 52.222-26

(a) If, during any 12-month period (including the 12 months preceding the award of this contract), the Contractor has been or is awarded nonexempt Federal contracts and/or subcontracts that have an aggregate value in excess of $10,000, the Contractor shall comply with subparagraphs (b)(1) through (11) of this clause. Upon request, the Contractor all provide information necessary to determine the applicability of this clause.

(b) During performance of this contract, the Contractor agrees as follows:

(1) The Contractor shall not discriminate against any employee or applicant for employment because of race, color, religion, sex, or national origin. However, it shall not be a violation of this clause for the Contractor to extend a publicly announced preference in employment to Indians living on or near an Indian reservation, in connection with employment opportunities on or near an Indian reservation, as permitted by 41 CFR 60-1.5.

(2) The Contractor shall take affirmative action to ensure that applicants are employed, and that employees are treated during employment, without regard to their race, color, religion, sex, or national origin. This shall include, but not be limited to, (i) employment, (ii) upgrading, (iii) demotion, (iv) transfer, (v) recruitment or recruitment advertising, (vi) layoff or termination, (vii) rates of pay or other forms of compensation, and (viii) selection for training, including apprenticeship.

(3) The Contractor shall post in conspicuous places available to employees and applicants for employment the notices to be provided by the Contracting Officer that explain this clause.

(4) The Contractor shall, in all solicitations or advertisement for employees placed by or on behalf of the Contractor, state that all qualified applicants will receive consideration for employment without regard to race, color, religion, sex, or national origin.

(5) The Contractor shall send, to each labor union or representative of workers with which it has a collective bargaining agreement or other contract or understanding, the notice to be provided by the Contracting Officer advising the labor union or workers' representative of the Contractor's commitments under this clause, and post copies of the notice in conspicuous places available to employees and applicants for employment.

(6) The Contractor shall comply with Executive Order 11246, as amended, and the rules, regulations, and orders of the Secretary of Labor.

(7) The Contractor shall furnish to the contracting agency all information required by Executive Order 11246, as amended, and by the rules, regulations, and orders of the Secretary of Labor. The Contractor shall also file Standard Form 100 (EEO-1), or any successor form, as prescribed in 41 CFR part 60-1. Unless the contractor has filed within the 12 months preceding the date of contract award, the Contractor shall within 30 days after contract award, apply to either the regional Office of Federal Contract Compliance Programs (OFCCP) or the local office of the Equal Employment Opportunity Commission for the necessary forms.

(8) The Contractor shall permit access to its premises during normal business hours, by the contracting agency or the OFCCP for the purpose of conducting on-site compliance evaluations and complaint investigations. The Contractor shall permit the Government to inspect and copy any books, accounts, records (including computerized records), and other material that may be relevant to the matter under investigation and pertinent to compliance with Executive Order 11246, as amended, and rules and regulations that implement the Executive Order.

(9) If the OFCCP determines that the Contractor is not in compliance with this clause or any rule, regulation, or order of the Secretary of Labor, this contract may be canceled, terminated, or suspended in whole or in part and the Contractor may be declared ineligible for further Government contracts, under the procedures authorized in Executive Order 11246, as amended. In addition, sanctions may be imposed and remedies invoked against the Contractor as provided in Executive Order 11246; as amended; in the rules, regulations, and orders of the Secretary of Labor; or as otherwise provided by law.

(10) The Contractor shall include the terms and conditions of subparagraphs (b)(1) through (11) of this clause in every subcontract or purchase order that is not exempted by the rules, regulations, or orders of the Secretary of Labor issued under Executive Order 11246, as amended, so that these terms and conditions will be binding upon each subcontract or vendor.

(11) The Contractor shall take such action with respect to any subcontract or purchase order as the Contracting Officer may direct as a means of enforcing these terms and conditions, including sanctions for noncompliance; provided, that if the Contractor becomes involved in, or is threatened with, litigation with a subcontractor or vendor as a result of any direction, the Contractor may request the United States to enter into the litigation to protect the interests of the United States.

(c) Notwithstanding any other clause in this contract, disputes relative to this clause will be governed by the procedures in 41 CFR 60-1.1.

(End of clause)

49. AFFIRMATIVE ACTION COMPLIANCE REQUIREMENTS FOR CONSTRUCTION (FEB 1999) FAR 52.222-27

(a) *Definitions*.

"Covered area," as used in this clause, means the geographical area described in the solicitation for this contract.

"Deputy Assistant Secretary," as used in this clause, means Deputy Assistant Secretary for Federal Contract Compliance, U.S. Department of Labor or a designee.

"Employer's identification number," as used in this clause, means the Federal Social Security number used on the employer's quarterly federal tax return, U.S. Treasury Department Form 941.

"Minority," as used in this clause, means--

(1) American Indian or Alaskan Native (all persons having origins in any of the original peoples of North America and maintaining identifiable tribal affiliations through membership and participation or community identification).

(2) Asian and Pacific Islander (all persons having origins in any of the original peoples of the Far East, Southeast Asia, the Indian Subcontinent, or the Pacific Islands); and

(3) Black (all persons having origins in any of the black African racial groups not of Hispanic origin);

(4) Hispanic (all persons of Mexican, Puerto Rican, Cuban, Central or South American, or other Spanish culture or origin, regardless of race);

(b) If the Contractor, or a subcontractor at any tier, subcontracts a portion of the work involving any construction trade, each such subcontract in excess of $10,000 shall include this clause and the Notice containing the goals for minority and female participation stated in the solicitation for this contract.

(c) If the Contractor is participating in a Hometown Plan (41 CFR 60-4) approved by the U.S. Department of Labor in a covered area, either individually or through an association, its affirmative action obligations on all work in the plan area (including goals) shall comply with the plan for those trades that have unions participating in the plan. Contractors must be able to demonstrate participation in, and compliance with, the provisions of the plan. Each Contractor or subcontractor participating in an approved plan is also required to comply with its obligations under the Equal Opportunity clause, and to make a good faith effort to achieve each goal under the plan in each trade in which it has employees. The overall good-faith performance by other Contractors or subcontractors toward a goal in an approved plan does not excuse any Contractor's or subcontractor's failure to make good-faith efforts to achieve the plan's goals.

(d) The Contractor shall implement the affirmative action procedures in subparagraphs (g)(1) through (16) of this clause. The goals stated in the solicitation for this contract are expressed as percentages of the total hours of employment and training of minority and female utilization that the Contractor should reasonably be able to achieve in each construction trade in which it has employees in the covered area. If the Contractor performs construction work in a geographical area located outside of the covered area, it shall apply the goals established for the geographical area where that work is actually performed. The Contractor is expected to make substantially uniform progress toward its goals in each craft.

(e) Neither the terms and conditions of any collective bargaining agreement, nor the failure by a union with which the Contractor has a collective bargaining agreement, to refer minorities or women shall excuse the Contractor's obligations under this clause, Executive Order 11246, as amended, or the regulations thereunder.

(f) In order for the nonworking training hours of apprentices and trainees to be counted in meeting the goals, apprentices and trainees must be employed by the Contractor during the training period, and the Contractor must have made a commitment to employ the apprentices and trainees at the completion of their training, subject to the availability of employment opportunities. Trainees must be trained pursuant to training programs approved by the U.S. Department of Labor.

(g) The Contractor shall take affirmative action to ensure equal employment opportunity. The evaluation of the Contractor's compliance with this clause shall be based upon its effort to achieve maximum results from its actions. The Contractor shall document these efforts fully and implement affirmative action steps at least as extensive as the following:

(1) Ensure a working environment free of harassment, intimidation, and coercion at all sites and in all facilities where the Contractor's employees are assigned to work. The Contractor, if possible, will assign two or more women to each construction project. The Contractor shall ensure that foremen, superintendents, and other onsite supervisory personnel are aware of and carry out the Contractor's obligation to maintain such a working environment, with specific attention to minority or female individuals working at these sites or facilities.

(2) Establish and maintain a current list of sources for minority and female recruitment. Provide written notification to minority and female recruitment sources and community organizations when the Contractor or its unions have employment opportunities available, and maintain a record of the organizations' responses.

(3) Establish and maintain a current file of the names, addresses, and telephone numbers of each minority and female off-the-street applicant, referrals of minorities or females from unions, recruitment sources, or community organizations and the action taken with respect to each individual. If an individual was sent to the union hiring hall for referral and not referred back to the Contractor by the union or, if referred back, not employed by the Contractor, this shall be documented in the file, along with whatever additional actions the Contractor may have taken.

(4) Immediately notify the Deputy Assistant Secretary when the union or unions with which the Contractor has a collective bargaining agreement has not referred back to the Contractor a minority or woman sent by the Contractor, or when the Contractor has other information that the union referral process has impeded the Contractor's efforts to meet its obligations.

(5) Develop on-the-job training opportunities and/or participate in training programs for the area that expressly include minorities and women, including upgrading programs and apprenticeship and trainee programs relevant to the Contractor's employment needs, especially those programs funded or approved by the Department of Labor. The Contractor shall provide notice of these programs to the sources compiled under subparagraph (g)(2) of this clause.

(6) Disseminate the Contractor's equal employment policy by--

(i) Providing notice of the policy to unions and to training, recruitment, and outreach programs, and requesting their cooperation in assisting the Contractor in meeting its contract obligations;

(ii) Including the policy in any policy manual and in collective bargaining agreements;

(iii) Publicizing the policy in the company newspaper, annual report, etc.;

(iv) Reviewing the policy with all management personnel and with all minority and female employees at least once a year; and

(v) Posting the policy on bulletin boards accessible to employees at each location where construction work is performed.

(7) Review, at least annually, the Contractor's equal employment policy and affirmative action obligations with all employees having responsibility for hiring, assignment, layoff, termination, or other employment decisions. Conduct review of this policy with all on-site supervisory personnel before initiating construction work at a job site. A written record shall be made an maintained identifying the time and place of these meetings, persons attending, subject matter discussed, and disposition of the subject matter.

(8) Disseminate the Contractor's equal employment policy externally by including it in any advertising in the news media, specifically including minority and female news media. Provide written notification to, and discuss this policy with, other Contractors and subcontractors with which the Contractor does or anticipates doing business.

(9) Direct recruitment efforts, both oral and written, to minority, female, and community organizations, to schools with minority and female students, and to minority and female recruitment and training organizations serving the Contractor's recruitment area and employment needs. Not later than 1 month before the date for acceptance of applications for apprenticeship or training by any recruitment source, send written notification to organizations such as the above, describing the openings, screening procedures, and tests to be used in the selection process.

(10) Encourage present minority and female employees to recruit minority persons and women. Where reasonable, provide after-school, summer, and vacation employment to minority and female youth both on the site and in other areas of the Contractor's workforce.

(11) Validate all tests and other selection requirements where required under 41 CFR 60-3.

(12) Conduct, at least annually, an inventory and evaluation at least of all minority and female personnel for promotional opportunities. Encourage these employees to seek or to prepare for through appropriate training, etc., opportunities for promotion.

(13) Ensure that seniority practices, job classifications, work assignments, and other personnel practices do not have a discriminatory effect by continually monitoring all personnel and employment-related activities to ensure that the Contractor's obligations under this contract are being carried out.

(14) Ensure that all facilities and company activities are nonsegregated except that separate or single-user restrooms and necessary dressing or sleeping areas shall be provided to assure privacy between sexes.

(15) Maintain a record of solicitations for subcontracts for minority and female construction contractors and suppliers, including circulation of solicitations to minority and female contractor associations and other business associations.

(16) Conduct a review, at least annually, of all supervisors' adherence to and performance under the Contractor's equal employment policy and affirmative action obligations.

(h) The Contractor is encouraged to participate in voluntary associations that may assist in fulfilling one or more of the affirmative actions obligations contained in subparagraphs (g)(1) through (16) of this clause. The efforts of a contractor association, joint contractor-union, contractor-community, or similar group of which the contractor is a member and participate may be asserted as fulfilling one or more of its obligations under subparagraphs (g)(1) through (16) of this clause, provided the Contractor--

(1) Actively participates in the group;

(2) Makes every effort to ensure that the group has a positive impact on the employment of minorities and women in the industry;

(3) Ensures that concrete benefits of the program are reflected in the Contractor's minority and female workforce participation;

(4) Make a good-faith effort to meet its individual goals and timetables; and

(5) Can provide access to documentation that demonstrates the effectiveness of actions taken on behalf of the Contractor. The obligation to comply is the Contractor's, and failure of such a group to fulfill an obligation shall not be a defense for the Contractor's noncompliance.

(i) A single goal for minorities and a separate single goal for women shall be established. The Contractor is required to provide equal employment opportunity and to take affirmative action for all minority groups, both male and female, and all women, both minority and nonminority. Consequently, the Contractor may be in violation of Executive Order 11246, as amended, if a particular group is employed in a substantially disparate manner.

(j) The Contractor shall not use goals or affirmative action standards to discriminate against any person because of race, color, religion, sex, or national origin.

(k) The Contractor shall not enter into any subcontract with any person or firm debarred from Government contracts under Executive Order 11246, as amended.

(l) The Contractor shall carry out such sanctions and penalties for violation of this clause and of the Equal Opportunity clause, including suspension, termination, and cancellation of existing subcontracts, as may be imposed or ordered under Executive Order 11246, as amended, and its implementing regulations, by the OFCCP. Any failure to carry out these sanctions and penalties as ordered shall be a violation of this clause and Executive Order 11246, as amended.

(m) The Contractor in fulfilling its obligations under this clause shall implement affirmative action procedures at least as extensive as those prescribed in paragraph (g) of this clause, so as to achieve maximum results from its efforts to ensure equal employment opportunity. If the Contractor fails to comply with the requirements of Executive Order 11246, as amended, the implementing regulations, or this clause, the Deputy Assistant Secretary shall take action as prescribed in 41 CFR 60-4.8.

(n) The Contractor shall designate a responsible official to--

(1) Monitor all employment-related activity to ensure that the Contractor's equal employment policy is being carried out;

(2) Submit reports as may be required by the Government; and

(3) Keep records that shall at least include for each employee the name, address, telephone number, construction trade, union affiliation (if any), employee identification number, social security number, race, sex, status (e.g., mechanic, apprentice, trainee, helper, or laborer), dates of changes in status, hours worked per week in the indicated trade, rate of pay, and locations at which the work was performed. Records shall be maintained in an easily understandable and retrievable

form; however, to the degree that existing records satisfy this requirement, separate records are not required to be maintained.

(o) Nothing contained herein shall be construed as a limitation upon the application of other laws that establish different standards of compliance or upon the requirements for the hiring of local or other area residents (e.g., those under the Public Works Employment Act of 1977 and the Community Development Block Grant Program).

(End of clause)

50. AFFIRMATIVE ACTION FOR DISABLED VETERANS AND VETERANS OF THE VIETNAM ERA (APR 1998) FAR 52.222-35

(a) *Definition.* As used in this clause--.

All employment openings includes all positions except executive and top management, those positions that will be filled from within the contractor's organization, and positions lasting 3 days or less. This term includes full-time employment, temporary employment of more than 3 days' duration, and part-time employment.

Appropriate office of the State employment service system, means the local office of the Federal-State national system of public employment offices with assigned responsibility to serve the area where the employment opening is to be filled including the District of Columbia, Guam, the Commonwealth of Puerto Rico, and the Virgin Islands.

Positions that will be filled from within the Contractor's organization means employment openings for which no considered will be given to persons outside the Contractor's organization (including affiliates, subsidiaries, and parent companies) and includes any openings that the Contractor proposes to fill from regularly established "recall" lists. The exception does not apply to a particular opening once an employee decides to consider applicants outside of its organization.

Veteran of the Vietnam era means a person who--

(1) Served on active duty for a period of more than 180 days, any part of which occurred between August 5, 1964, and May 7, 1975, and was discharged or released therefrom with other than a dishonorable discharge; or

(2) Was discharged or released from active duty for a service-connected disability if any part of such active duty was performed between August 5, 1964, and May 7, 1975.

(b) *General*. (1) Regarding any position for which the employee or applicant for employment is qualified, the Contractor shall not discriminate against the individual because the individual is a disabled veteran or a veteran of the Vietnam era. The Contractor agrees to take affirmative action to employ, advance in employment, and otherwise treat qualified disabled veterans and veterans of the Vietnam era without discrimination based upon their disability or veterans' status in all employment practices such as--

(i) Employment;
(ii) Upgrading;
(iii) Demotion or transfer;
(iv) Recruitment;
(v) Advertising;
(vi) Layoff or termination;
(vii) Rates of pay or other forms of compensation; and
(viii) Selection for training, including apprenticeship.

(2) The Contractor agrees to comply with the rules, regulations, and relevant orders of the Secretary of Labor (Secretary) issued under the Vietnam Era Veterans' Readjustment Assistance Act of 1972 (the Act), as amended.

(c) *Listing openings*. (1) The Contractor agrees to list all employment openings existing at contract award or occurring during contract performance, at an appropriate office of the State employment service system in the locality where the opening occurs. These openings include those occurring at any Contractor facility, including one not connected with performing this contract. An independent corporate affiliate is exempt from this requirement.

(2) State and local government agencies holding Federal contracts of $10,000 or more shall also list all employment openings with the appropriate office of the State employment service.

(3) The listing of employment openings with the State employment service system is required at least concurrently with using any other recruitment source or effort and involves the obligations of placing a bona fide job order, including accepting referrals of veterans and nonveterans. This listing does not require hiring any particular job applicant or hiring from any particular group of job applicants and is not intended to relieve the Contractor from any requirements of Executive orders or regulations concerning nondiscrimination in employment.

(4) Whenever the Contractor becomes contractually bound to the listing terms of this clause, it shall advise the State employment service system, in each State where it has establishments, of the name and location of each hiring location in the State. As long as the Contractor is contractually bound to these terms and has so advised the State system,

it need not advise the State system of subsequent contracts. The Contractor may advise the State system when it is no longer bound by this contract clause.

(d) *Applicability*. This clause does not apply to the listing of employment openings which occur and are filled outside the 50 States, the District of Columbia, the Commonwealth of Puerto Rico, Guam, and the Virgin Islands.

(e) *Postings*. (1) The Contractor agrees to post employment notices stating (i) the Contractor's obligation under the law to take affirmative action to employ and advance in employment qualified disabled veterans and veterans of the Vietnam era, and (ii) the rights of applicants and employees.

(2) These notices shall be posted in conspicuous places that are available to employees and applicants for employment. They shall be in a form prescribed by the Deputy Assistant Secretary for Federal Contract Compliance Programs, Department of Labor (Deputy Assistant Secretary), and provided by or through the Contracting Officer.

(3) The Contractor shall notify each labor union or representative of workers with which it has a collective bargaining agreement or other contract understanding, that the Contractor is bound by the terms of the Act, and is committed to take affirmative action to employ, and advance in employment, qualified disabled veterans and veterans of the Vietnam Era.

(f) *Noncompliance*. If the Contractor does not comply with the requirements of this clause, appropriate actions may be taken under the rules, regulations, and relevant orders of the Secretary issued pursuant to the Act.

(g) *Subcontracts*. The Contractor shall include the terms of this clause in every subcontract or purchase order of $10,000 or more unless exempted by rules, regulations, or orders of the Secretary. The Contractor shall act as specified by the Deputy Assistant Secretary to enforce the terms, including action for noncompliance.

(End of clause)

51. AFFIRMATIVE ACTION FOR WORKERS WITH DISABILITIES (JUN 1998)
FAR 52.222-36

(a) General. (1) Regarding any position for which the employee or applicant for employment is qualified, the Contractor shall not discriminate against any employee or applicant because of physical or mental disability. The Contractor agrees to take affirmative action to employ, advance in employment, and otherwise treat qualified individuals with disabilities without discrimination based upon their physical or mental disability in all employment practices such as—

(i) Recruitment, advertising, and job application procedures;

(ii) Hiring, upgrading, promotion, award of tenure, demotion, transfer, layoff, termination, right of return from layoff, and rehiring;

(iii) Rates of pay or any other form of compensation and changes in compensation;

(iv) Job assignments, job classifications, organizational structures, position descriptions, lines of progression, and seniority lists;

(v) Leaves of absence, sick leave, or any other leave;

(vi) Fringe benefits available by virtue of employment, whether or not administered by the Contractor;

(vii) Selection and financial support for training, including apprenticeships, professional meetings, conferences, and other related activities, and selection for leaves of absence to pursue training;

(viii) Activities sponsored by the Contractor, including social or recreational programs; and

(ix) Any other term, condition, or privilege of employment.

(2) The Contractor agrees to comply with the rules, regulations, and relevant orders of the Secretary of Labor (Secretary) issued under the Rehabilitation Act of 1973 (29 U.S.C. 793) (the Act), as amended.

(b) Postings. (1) The Contractor agrees to post employment notices stating—

(i) The Contractor's obligation under the law to take affirmative action to employ and advance in employment qualified individuals with disabilities; and

(ii) The rights of applicants and employees.

(2) These notices shall be posted in conspicuous places that are available to employees and applicants for employment. The Contractor shall ensure that applicants and employees with disabilities are informed of the contents of the notice (*e.g.*, the Contractor may have the notice read to a visually disabled individual, or may lower the posted notice so that it might be read by a person in a wheelchair). The notices shall be in a form prescribed by the Deputy Assistant Secretary for Federal Contract Compliance of the U.S. Department of Labor (Deputy Assistant Secretary) and shall be provided by or through the Contracting Officer.

(3) The Contractor shall notify each labor union or representative of workers with which it has a collective bargaining agreement or other contract understanding, that the Contractor is bound by the terms of Section 503 of the Act

and is committed to take affirmative action to employ, and advance in employment, qualified individuals with physical and mental disabilities.

(c) Noncompliance. If the Contractor does not comply with the requirements of this clause, appropriate actions may be taken under the rules, regulations, and relevant orders of the Secretary issued pursuant to the Act.

(d) Subcontracts. The Contractor shall include the terms of this clause in every subcontract or purchase order in excess of $10,000 unless exempted by rules, regulations, or orders of the Secretary. The Contractor shall act as specified by the Deputy Assistant Secretary to enforce the terms, including action for noncompliance.

(End of clause)

52. EMPLOYMENT REPORTS ON DISABLED VETERANS AND VETERANS OF THE VIETNAM ERA (JAN 1999) FAR 52.222-37

(a) Unless the Contractor is a State or local government agency, the contractor shall report at least annually, as required by the Secretary of Labor, on--

(1) The number of disabled veterans and the number of veterans of the Vietnam era in the workplace of the contractor by job category and hiring location; and

(2) The total number of new employees hired during the period covered by the report, and of that total, the number of disabled veterans, and the number of veterans of the Vietnam era.

(b) The above items shall be reported by completing the form entitled "Federal Contractor Veterans' Employment Report VETS-100."

(c) Reports shall be submitted no later than September 30 of each year beginning September 30, 1988.

(d) The employment activity report required by paragraph (a)(2) of this clause shall reflect total hires during the most recent 12-month period as of the ending data selected for the employment profile report required by paragraph (a)(1) of this clause. Contractors may select an ending date: (1) As of the end of any pay period during the period January through March 1 of the year the report is due, or (2) as of December 31, if the contractor has previous written approval from the Equal Employment Opportunity Commission to do so for purposes of submitting the Employer Information Report EEO-1 (Standard Form 100).

(e) The count of veterans reported according to paragraph (a) of this clause shall be based on voluntary disclosure. Each contractor subject to the reporting requirements at 38 U.S.C.4212 shall invite all disabled veterans and veterans of the Vietnam era who wish to benefit under the affirmative action program at 38 U.S.C. 4212 to identify themselves to the contractor. The invitation shall state that the information is voluntarily provided; that the information will be kept confidential; that disclosure or refusal to provide the information will not subject the applicant or employee to any adverse treatment; and that the information will be used only in accordance with the regulations promulgated under 38 U.S.C. 4212.

(f) *Subcontracts*. The Contractor shall include the terms of this clause in every subcontract or purchase order of $10,000 or more unless exempted by rules, regulations, or orders of the Secretary.

(End of clause)

53. CLEAN AIR AND WATER (APR 1984) FAR 52.223-2

(a) "Air Act," as used in this clause, means the Clean Air Act (42 U.S.C. 7401 et seq.).

"Clean air standards," as used in this clause, means--

(1) Any enforceable rules, regulations, guidelines, standards, limitations, orders, controls, prohibitions, work practices, or other requirements contained in, issued under, or otherwise adopted under the Air Act or Executive Order 11738;

(2) An applicable implementation plan as described in section 110(d) of the Air Act (42 U.S.C. 7410(d));

(3) An approved implementation procedure or plan under section 111(c) or section 111(d) of the Air Act (42 U.S.C. 7411(c) or (d)); or

(4) An approved implementation procedure under section 112(d) of the Air Act (42 U.S.C. 7412(d)).

"Clean water standards," as used in this clause, means any enforceable limitation, control, condition, prohibition, standard, or other requirement promulgated under the Water Act or contained in a permit issued to a discharger by the EPA or by a State under an approved program, as authorized by section 402 of the Water Act (33 U.S.C. 1342), or by local government to ensure compliance with pretreatment regulations as required by section 307 of the Water Act (33 U.S.C. 1317).

"Compliance," as used in this clause, means compliance with--

(1) Clean air or water standards; or

(2) A schedule or plan ordered or approved by a court of competent jurisdiction, the EPA, or an air or water pollution control agency under the requirements of the Air Act or Water Act and related regulations.

"Facility," as used in this clause, means any building, plant, installation, structure, mine, vessel or other floating craft, location, or site of operations, owned, leased, or supervised by a Contractor or subcontractor, used in the performance of a contract or subcontract. When a location or site of operations includes more than one building, plant, installation, or structure, the entire location or site shall be deemed a facility except when the Administrator, or a designee, of the EPA determines that independent facilities are collocated in one geographical area.

"Water Act," as used in this clause, means Clean Water Act (33 U.S.C. 1251 et seq.).

(b) The Contractor agrees--

(1) To comply with the requirements of section 114 of the Clean Air Act (42 U.S.C. 7414) and section 308 of the Clean Water Act (33 U.S.C. 1318) relating to inspection, monitoring, entry, reports, and information, as well as other requirements specified in section 114 and section 308 of the Air Act and the Water Act, and all regulations and guidelines issued to implement those acts before the award of this contract;

(2) That no portion of the work required by this prime contract will be performed in a facility listed on the EPA List of Violating Facilities on the date when this contract was awarded unless and until the EPA eliminates the name of the facility from the listing;

(3) To use best efforts to comply with clean air standards and clean water standards at the facility in which the contract is being performed; and

(4) To insert the substance of this clause into any nonexempt subcontract, including this subparagraph (b)(4).

(End of clause)

54. POLLUTION PREVENTION AND RIGHT-TO-KNOW INFORMATION (APR 1998) FAR 52.223-5

(a) Executive Order 12856 of August 3, 1993, requires Federal facilities to comply with the provisions of the Emergency Planning and Community Right-to-know Act of 1986 (EPCRA) (42 U.S.C. 11001-11050) and the Pollution Prevention Act of 1990 (PPA) (42 U.S.C. 13101-13109).

(b) The Contractor shall provide all information needed by the Federal facility to comply with the emergency planning reporting requirements of Section 302 of EPCRA; the emergency notice requirements of Section 304 of EPCRA; the list of Material Data Safety Sheets required by Section 311 of EPCRA; the emergency and hazardous chemical inventory forms of Section 312 of EPCRA; the toxic chemical release inventory of Section 313 of EPCRA, which includes the reduction and recycling information required by Section 6607 of PPA; and the toxic chemical reduction goals requirements of Section 3-302 of Executive Order 12856.

(End of clause)

55. DRUG-FREE WORKPLACE (JAN 1997) FAR 52.223-6

(a) Definitions. As used in this clause--

"Controlled substance" means a controlled substance in schedules I through V of section 202 of the Controlled Substances Act (21 U.S.C. 812) and as further defined in regulation at 21 CFR 1308.11-1308.15.

"Conviction" means a finding of guilt (including a plea of nolo contendere) or imposition of sentence, or both, by any judicial body charged with the responsibility to determine violations of the Federal or State criminal drug statutes.

"Criminal drug statute" means a Federal or non-Federal criminal statute involving the manufacture, distribution, dispensing, possession or use of any controlled substance.

"Drug-free workplace" means the site(s) for the performance of work done by the Contractor in connection with a specific contract at which employees of the Contractor are prohibited from engaging in the unlawful manufacture, distribution, dispensing, possession, or use of a controlled substance.

"Employee" means an employee of a Contractor directly engaged in the performance of work under a Government contract. "Directly engaged" is defined to include all direct cost employees and any other Contractor employee who has other than a minimal impact or involvement in contract performance.

"Individual" means an offeror/contractor that has no more than one employee including the offeror/contractor.

(b) The Contractor, if other than an individual, shall--within 30 days after award (unless a longer period is agreed to in writing for contracts of 30 days or more performance duration), or as soon as possible for contracts of less than 30 days performance duration--

(1) Publish a statement notifying its employees that the unlawful manufacture, distribution, dispensing, possession, or use of a controlled substance is prohibited in the Contractor's workplace and specifying the actions that will be taken against employees for violations of such prohibition;

(2) Establish an ongoing drug-free awareness program to inform such employees about--

(i) The dangers of drug abuse in the workplace;

(ii) The Contractor's policy of maintaining a drug-free workplace;

(iii) Any available drug counseling, rehabilitation, and employee assistance programs; and

(iv) The penalties that may be imposed upon employees for drug abuse violations occurring in the workplace;.

(3) Provide all employees engaged in performance of the contract with a copy of the statement required by subparagraph (b)(1) of this clause;

(4) Notify such employees in writing in the statement required by subparagraph (b)(1) of this clause that, as a condition of continued employment on this contract, the employee will--

(i) Abide by the terms of the statement; and

(ii) Notify the employer in writing of the employee's conviction under a criminal drug statute for a violation occurring in the workplace no later than 5 days after such conviction.

(5) Notify the Contracting Officer in writing within 10 days after receiving notice under subdivision (b)(4)(ii) of this clause, from an employee or otherwise receiving actual notice of such conviction. The notice shall include the position title of the employee;

(6) Within 30 days after receiving notice under subdivision (b)(4)(ii) of this clause of a conviction, take one of the following actions with respect to any employee who is convicted of a drug abuse violation occurring in the workplace:

(i) Taking appropriate personnel action against such employee, up to and including termination; or

(ii) Require such employee to satisfactorily participate in a drug abuse assistance or rehabilitation program approved for such purposes by a Federal, State, or local health, law enforcement, or other appropriate agency; and

(7) Make a good faith effort to maintain a drug-free workplace through implementation of subparagraphs (b)(1) through (b)(6) of this clause.

(c) The Contractor, if an individual, agrees by award of the contract or acceptance of a purchase order, not to engage in the unlawful manufacture, distribution, dispensing, possession, or use of a controlled substance while performing this contract.

(d) In addition to other remedies available to the Government, the Contractor's failure to comply with the requirements of paragraph (b) or (c) of this clause may, pursuant to FAR 23.506, render the Contractor subject to suspension of contract payments, termination of the contract for default, and suspension or debarment.

(End of clause)

56. OZONE-DEPLETING SUBSTANCES (JUN 1996) FAR 52.223-11

(a) *Definition*. "Ozone-depleting substance", as used in this clause, means any substance designated as Class I by the Environmental Protection Agency (EPA) (40 CFR Part 82), including but not limited to chlorofluorocarbons, halons, carbon tetrachloride, and methyl chloroform; or any substance designated as Class II by EPA (40 CFR Part 82), including but not limited to hydrochlorofluorocarbons.

(b) The Contractor shall label products which contain or are manufactured with ozone-depleting substances in the manner and to the extent required by 42 U.S.C. 7671j (b), (c), and (d) and 40 CFR Part 82, Subpart E, as follows:

''WARNING: Contains (or manufactured with, if applicable) ____*_____, a substance(s) which harm(s) public health and environment by destroying ozone in the upper atmosphere."

*The Contractor shall insert the name of the substance(s).

(End of clause)

57. TOXIC CHEMICAL RELEASE REPORTING (OCT 1996) FAR 52.223-14

(a) Unless otherwise exempt, the Contractor , as owner or operator of a facility used in the performance of this contract, shall file by July 1 for the prior calendar year an annual Toxic Chemical Release Form (Form R) as described in sections 313(a) and (g) of the Emergency Planning and Community Right-to-Know Act of 1986 (EPCRA) (42 U.S.C. 11023(a) and (g)), and section 6607 of the Pollution Prevention Act of 1990 (PPA) (42 U.S.C. 13106). The Contractor

shall file, for each facility subject to the Form R filing and reporting requirements, the annual Form R throughout the life of the contract.

(b) A Contractor owned or operated facility used in the performance of this contract is exempt from the requirement to file an annual Form R if--

(1) The facility does not manufacture, process or otherwise use any toxic chemicals listed under section 313(c) of EPCRA, 42 U.S.C. 11023(c);

(2) The facility does not have 10 or more full-time employees as specified in section 313(b)(1)(A) of EPCRA, 42 U.S.C. 11023 (b)(1)(A);

(3) The facility does not meet the reporting thresholds of toxic chemicals established under section 313(f) of EPCRA, 42 U.S.C. 11023(f) (including the alternate thresholds at 40 CFR 372.27, provided an appropriate certification form has been file with EPA);

(4) The facility does not fall within the Standard Industrial Classification Code (SIC) designations 20 through 39 as set forth in section 19.102 of the Federal Acquisition Regulation (FAR); or

(5) The facility is not located within any State of the United States, the District of Columbia, the Commonwealth of Puerto Rico, Guam, American Samoa, the United States Virgin Islands, the Northern Mariana Islands, or any other territory or possession over which the United States has jurisdiction.

(c) If the Contractor has certified to an exemption in accordance with one or more of the criteria in paragraph (b) of this clause, and after award of the contract circumstances change so that any one of its owned or operated facilities used in the performance of this contract is no longer exempt--

(1) The Contractor shall notify the Contracting Officer; and

(2) The Contractor as owner or operator of a facility used in the performance of this contract that is no longer exempt, shall (I) submit a Toxic Chemical Release Inventory Form (Form R) on or before July 1 for the prior calendar year during which the facility becomes eligible; and (ii) continue to file the annual Form R for the life of the contract for such facility.

(d) The Contracting Officer may terminate this contract or take other action as appropriate, if the Contractor fails to comply accurately and fully with the EPCRA and PPA toxic chemical release filing and reporting requirements.

(e) Except for acquisitions of commercial items as defined in FAR Part 2, the Contractor shall--

(1) For competitive subcontracts expected to exceed $100,000 (including all options), include a solicitation provision substantially the same as the provision at FAR 52.223-13, Certification of Toxic Chemical Release Reporting; and

(2) Include in any resultant subcontract exceeding $100,000 (including all options), the substance of this clause, except this paragraph (e).

(End of clause)

58. BUY AMERICAN ACT--CONSTRUCTION MATERIALS (JUN 1997) FAR 52.225-5

NOTE: This clause applies only to contracts less than $6,500,000.

(a) *Definitions*. As used in this clause--

The Buy American Act (41 U.S.C. 10) provides that the Government give preference to domestic construction material.

"Components" means those articles, materials, and supplies incorporated directly into construction materials.

"Construction material" means an article, material, or supply brought to the construction site for incorporation into the building or work. Construction material also includes an item brought to the site pre-assembled from articles, materials or supplies. However, emergency life safety systems, such as emergency lighting, fire alarm, and audio evacuation systems, which are discrete systems incorporated into a public building or work and which are produced as a complete system, shall be evaluated as a single and distinct construction material regardless of when or how the individual parts or components of such systems are delivered to the construction site.

"Domestic construction material" means (1) an unmanufactured construction material mined or produced in the United States, or (2) a construction material manufactured in the United States, if the cost of its components mined, produced, or manufactured in the United States exceeds 50 percent of the cost of all its components. Components of foreign origin of the same class or kind as the construction materials determined to be unavailable pursuant to subparagraph 25.202(a)(2) of the Federal Acquisition Regulation (FAR) shall be treated as domestic.

(b) (1) The Buy American Act (41 U.S.C. 10a-10d) requires that only domestic construction material be used in performing this contract, except as provided in paragraphs (b)(2) and (b)(3) of this clause.

(2) This requirement does not apply to the excepted construction material or components listed by the Government as follows: (List will appear in Section H if required.)

(3) Other foreign construction material may be added to the list in paragraph (b)(2) of this clause if the Government determines that--

(i) The cost would be unreasonable (the cost of a particular domestic construction material shall be determined to be unreasonable when the cost of such material exceeds the cost of foreign material by more than 6 percent, unless the agency head determines a higher percentage to be appropriate);

(ii) The application of he restriction of the Buy American Act to a particular construction material would be impracticable or inconsistent with the public interest; or

(iii) The construction material is not mined, produced, or manufactured in the United States in sufficient and reasonably available commercial quantities of a satisfactory quality.

(4) The Contractor agrees that only domestic construction material will be used by the Contractor, subcontractors, material men, and suppliers in the performance of this contract, except for foreign construction materials, if any, listed in paragraph (b)(2) of this clause.

(c) *Request for determination*. (1) Contractors requesting to use foreign construction material under paragraph (b)(3) of this clause shall provide adequate information for Government evaluation of the request for a determination regarding the inapplicability of the Buy American Act. Each submission shall include a description of the foreign and domestic construction materials, including unit of measure, quantity, price, time of delivery or availability, location of the construction project, name and address of the proposed contractor, and a detailed justification of the reason for use of foreign materials cited in accordance with paragraph (b)(3) of this clause. A submission based on unreasonable cost shall include a reasonable survey of the market and a completed price comparison table in the format in paragraph (d) of this clause. The price of construction material shall include all delivery costs to the construction site and any applicable duty (whether or not a duty-free certificate may be issued).

(2) If the Government determines after contract award that an exception to the Buy American Act applies, the contract shall be modified to allow use of the foreign construction material, and adequate consideration shall be negotiated. However, when the basis for the exception is the unreasonable price of a domestic construction material, adequate consideration shall not be less than the differential established in paragraph (b)(3)(i) of this clause.

(3) If the Government does not determine that an exception of the Buy American Act applies, the use of that particular foreign construction material will be a failure to comply with the Act.

(d) For evaluation of requests under paragraph (c) of this clause based on unreasonable cost, the following information any applicable supporting data based on the survey of suppliers shall be included in the request:

FOREIGN AND DOMESTIC CONSTRUCTION MATERIALS PRICE COMPARISON

Construction material description	Unit of measure	Quantity	Price (dollars) *
Item 1:			
Foreign construction material			
Domestic construction material			
Item 2:			
Foreign construction material			
Domestic construction material			

List name, address, telephone number, and contract for suppliers surveyed. Attach copy of response; if oral, attach summary. Include other applicable supporting information.

*Include all delivery costs to the construction site and any applicable duty (whether or not a duty-free entry certificate is issued.

(End of clause)

59. RESTRICTIONS ON CERTAIN FOREIGN PURCHASES (AUG 1998) FAR 52.225-11

(a) Unless advance written approval of the Contracting Officer is obtained, the Contractor shall not acquire for use in the performance of this contract, any supplies or services originating from sources within, or that were located in or transported from or through, countries whose products are banned from importation into the United States by Executive order or regulations of the Office of Foreign Assets Control, Department of the Treasury. Those countries include Cuba, Iran, Iraq, Libya, and North Korea, and Sudan.

(b) The Contractor shall not acquire for use in the performance of this contract any supplies or services from entities controlled by the Government of Iraq.

(c) The Contractor agrees to insert the provisions of this clause, including this paragraph (c), in all subcontracts hereunder.

(End of clause)

60. BUY AMERICAN ACT--CONSTRUCTION MATERIALS UNDER TRADE AGREEMENTS ACT AND NORTH AMERICAN FREE TRADE AGREEMENT (JUN 1997) FAR 52.225-15

NOTE: This clause applies only to acquisitions with an acquisition value of $7,311,000 or more.

(a) *Definitions*. As used in the clause--

"Components" means those articles, materials, and supplies incorporate directly into construction materials.

"Construction material" means an article, material, or supply brought to the construction site for incorporation into the building or work. Construction material also includes an item brought to the site pre-assembled from articles, materials, or supplies. However, emergency life safety systems, such as emergency lighting, fire alarm, and audio evacuation systems, which are discrete systems incorporated into a public building or work and which are produced as a complete system, shall be evaluated as a single and distinct construction material regardless of when or how the individual parts or components of such systems are delivered to the construction site.

"Designated country construction material" means a construction material that—

(1) Is wholly the growth, product, or manufacture of a designated country (as defined at FAR 25.401), or

(2) In the case of a construction material which consists in whole or in part of materials from another country or instrumentality, has been substantially transformed in a designated country into a new and different construction material distinct from the materials from which it was transformed.

"Domestic construction material" means (1) an unmanufactured construction material mined or produced in the United States, or (2) a construction material manufactured in the U.S., if the cost of its components mined, produced, or manufactured in the United States exceeds 50 percent of the cost of all its components. Components of foreign origin of the same class or kind as the construction materials determined to be unavailable pursuant to subparagraph 25.202(a)(2) of the Federal Acquisition Regulation (FAR) shall be treated as domestic.

"North American Free Trade Agreement (NAFTA) country" means Canada or Mexico.

"NAFTA country construction material" means a construction material that—

(1) Is wholly the growth, product, or manufacture of a NAFTA country, or

(2) In the case of a construction material which consists in whole or in part of materials from another country or instrumentality, has been substantially transformed in a NAFTA country into a new and different construction material distinct from the materials from which it was transformed.

(b) (1) The Buy American Act (41 U.S.C. 10a-10d) requires that only domestic construction material be used in performing this contract, except as provided in paragraphs (b)(2), (b)(3), and (b)(4) of this clause.

(2) The Trade Agreements Act and the North American Free Trade Agreement (NAFTA) provide that designated country and NAFTA country construction materials are exempted from application of the Buy American Act.

(3) The requirement in paragraph (b)(1) of this clause does not apply to the excepted construction material or components listed by the Government as follows:

(*If applicable this listing will be placed in Section 00800*)

(4) Other foreign construction material may be added to the list in paragraph (b)(3) of this clause if the Government determines that--

(i) The cost would be unreasonable (the cost of a particular domestic construction material shall be determined to be unreasonable when the cost of such material exceeds the cost of foreign material exceeds the cost of foreign material by more than 6 percent, unless the agency head determines a higher percentage to be appropriate);

(ii) The application of the restriction of the Buy American Act to a particular construction material would be impracticable or inconsistent with the public interest; or

(iii) The construction material is not mined, produced, or manufactured in the United States in sufficient and reasonably available commercial quantities of a satisfactory quality.

(5) The Contractor agrees that only domestic construction materials, NAFTA country construction materials, or designated country construction materials will be used by the Contractor, subcontractors, material men, and suppliers in the performance of this contract, except for foreign construction materials if any, listed in paragraph (b)(3) of this clause.

(c) *Request for* determination. (1) Contractors requesting to use foreign construction material under paragraph (b)(4) of this clause shall provide adequate information for Government evaluation of the request for a determination regarding the inapplicability of the Buy American Act. Each submission shall include a description of the foreign and domestic construction materials, including unit of measure, quantity, price, time of delivery or availability, location of the construction project, name and address of the proposed contractor, and a detailed justification of the reason for use of foreign materials cited in accordance with paragraph (b)(4) of this clause. A submission based on unreasonable cost shall include a reasonable survey of the market and a completed price comparison table in the format in paragraph (d) of this clause. The price of construction materials shall include all delivery costs to the construction site and any applicable duty (whether or not a duty-free certificate may be issued).

(2) If the Government determines after contract award that an exception to the Buy American Act applies, the contract shall be modified to allow use of the foreign construction material, and adequate consideration all be negotiated. However, when the basis for the exception is the unreasonable price of a domestic construction material, adequate consideration all not be less than the differential established in paragraph (b)(4)(i) of this clause.

(3) If the Government does not determine that an exception to the Buy American Act applies, the use of that particular foreign construction material will be a failure to comply with the Act.

(d) For evaluation of requests under paragraph (c) of this clause based on unreasonable cost, the following information and any applicable supporting data based on the survey of suppliers shall be included in the request:

FOREIGN AND DOMESTIC CONSTRUCTION MATERIALS PRICE COMPARISON

Construction Material Description	Unit of Measure	Quantity	Price (dollars) *
Item 1:			
Foreign construction material	_____	_____	_____
Domestic construction material	_____	_____	_____
Item 2:			
Foreign construction material	_____	_____	_____
Domestic construction material	_____	_____	_____

[List name, address, telephone number, and contract for suppliers surveyed. Attach copy of response; if oral, attach summary.]
[Include other applicable supporting information.]
*[*Include all delivery costs to the construction site and any applicable duty (whether or not a duty-free certificate is issued).]*

(End of clause)

61. BUY AMERICAN ACT--CONSTRUCTION MATERIALS UNDER TRADE AGREEMENTS ACT AND NORTH AMERICAN FREE TRADE AGREEMENT (JUN 1997) ALTERNATE I (MAY 1997) FAR 52.225-15 I

NOTE: This clause applies only to acquisitions with an acquisition value from $6,500,000 to $7,311,000.

(a) *Definitions*. As used in the clause--

"Components" means those articles, materials, and supplies incorporate directly into construction materials.

"Construction material" means an article, material, or supply brought to the construction site for incorporation into the building or work. Construction material also includes an item brought to the site pre-assembled from articles, materials, or supplies. However, emergency life safety systems, such as emergency lighting, fire alarm, and audio evacuation systems, which are discrete systems incorporated into a public building or work and which are produced as a complete system, shall be evaluated as a single and distinct construction material regardless of when or how the individual parts or components of such systems are delivered to the construction site.

"Designated country construction material" means a construction material that—

(1) Is wholly the growth, product, or manufacture of a designated country (as defined at FAR 25.401), or

(2) In the case of a construction material which consists in whole or in part of materials from another country or instrumentality, has been substantially transformed in a designated country into a new and different construction material distinct from the materials from which it was transformed.

"Domestic construction material" means (1) an unmanufactured construction material mined or produced in the United States, or (2) a construction material manufactured in the U.S., if the cost of its components mined, produced, or manufactured in the United States exceeds 50 percent of the cost of all its components. Components of foreign origin of the same class or kind as the construction materials determined to be unavailable pursuant to subparagraph 25.202(a)(2) of the Federal Acquisition Regulation (FAR) shall be treated as domestic.

"North American Free Trade Agreement (NAFTA) country" means Canada or Mexico.

"NAFTA country construction material" means a construction material that

(1) Is wholly the growth, product, or manufacture of a NAFTA country, or

(2) In the case of a construction material which consists in whole or in part of materials from another country or instrumentality, has been substantially transformed in a NAFTA country into a new and different construction material distinct from the materials from which it was transformed.

(b) (1) The Buy American Act (41 U.S.C. 10a-10d) requires that only domestic construction material be used in performing this contract, except as provided in paragraphs (b)(2), (b)(3), and (b)(4) of this clause.

(2) The Trade Agreement Act and the North American Free Trade Agreement (NAFTA) provide that designated country and NAFTA country construction materials are exempted from application of the Buy American Act.

(3) The requirement in paragraph (b)(1) of this clause does not apply to the excepted construction material or components listed by the Government as follows:
(*If applicable this listing will be placed in Section 00800*)

(4) Other foreign construction material may be added to the list in paragraph (b)(3) of this clause if the Government determines that--

(i) The cost would be unreasonable (the cost of a particular domestic construction material shall be determined to be unreasonable when the cost of such material exceeds the cost of foreign material exceeds the cost of foreign material by more than 6 percent, unless the agency head determines a higher percentage to be appropriate);

(ii) The application of the restriction of the Buy American Act to a particular construction material would be impracticable or inconsistent with the public interest; or

(iii) The construction material is not mined, produced, or manufactured in the United States in sufficient and reasonably available commercial quantities of a satisfactory quality.

(5) The Contractor agrees that only domestic construction materials, or NAFTA country construction materials, will be used by the Contractor, subcontractors, material men, and suppliers in the performance of this contract, except for foreign construction materials, if any, listed in paragraph (b)(3) of this clause.

(c) *Request for* determination. (1) Contractors requesting to use foreign construction material under paragraph (b)(4) of this clause shall provide adequate information for Government evaluation of the request for a determination regarding the inapplicability of the Buy American Act. Each submission shall include a description of the foreign and domestic construction materials, including unit of measure, quantity, price, time of delivery or availability, location of the construction project, name and address of the proposed contractor, and a detailed justification of the reason for use of foreign materials cited in accordance with paragraph (b)(4) of this clause. A submission based on unreasonable cost shall include a reasonable survey of the market and a completed price comparison table in the format in paragraph (d) of this clause. The price of construction materials shall include all delivery costs to the construction site and any applicable duty (whether or not a duty-free certificate may be issued).

(2) If the Government determines after contract award that an exception to the Buy American Act applies, the contract shall be modified to allow use of the foreign construction material, and adequate consideration all be negotiated. However, when the basis for the exception is the unreasonable price of a domestic construction material, adequate consideration all not be less than the differential established in paragraph (b)(4)(i) of this clause.

(3) If the Government does not determine that an exception to the Buy American Act applies, the use of that particular foreign construction material will be a failure to comply with the Act.

(d) For evaluation of requests under paragraph (c) of this clause based on unreasonable cost, the following information and any applicable supporting data based on the survey of suppliers shall be included in the request:

included in the request:

FOREIGN AND DOMESTIC CONSTRUCTION MATERIALS PRICE COMPARISON

Construction Material Description	Unit of Measure	Quantity	Price (dollars) *
Item 1:			
Foreign construction material	_____	_____	_____
Domestic construction material	_____	_____	_____
Item 2:			
Foreign construction material	_____	_____	_____
Domestic construction material	_____	_____	_____

[List name, address, telephone number, and contract for suppliers surveyed. Attach copy of response; if oral, attach summary.]
[Include other applicable supporting information.]
*[*Include all delivery costs to the construction site and any applicable duty (whether or not a duty-free certificate is issued).]*

(End of clause)

62. SECONDARY ARAB BOYCOTT OF ISRAEL (JUN 1992) DFARS 252.225-7031

(a) *Definitions*. As used in this clause--

(1) "Foreign person" means any person other than a United States person as defined in Section 16(2) of the Export Administration Act of 1979 (50 U.S.C. App. Sec 2415).

(2) "United States person" is defined in Section 16(2) of the Export Administration Act of 1979 and means any United States resident or national (other than an individual resident outside the United States and employed by other than a United States person), any domestic concern (including any permanent domestic establishment of any foreign concern), and any foreign concern), and any foreign subsidiary or affiliate (including any permanent foreign establishment) of any domestic concern which is controlled in fact by such domestic concern, as determined under regulations of the President.

(b) *Certification*. By submitting this offer, the Offeror, if a foreign person, company or entity, certifies that it--

(1) Does not comply with the Secondary Arab Boycott of Israel; and

(2) Is not taking or knowingly agreeing to take any action, with respect to the Secondary Boycott of Israel of Arab countries, which 50 U.S.C. App. Sec. 2407(a) prohibits a United States person from taking.

(End of clause)

63. UTILIZATION OF INDIAN ORGANIZATIONS AND INDIAN-OWNED ECONOMIC ENTERPRISES (JAN 1999) FAR 52.226-1

(a) For Department of Defense contracts, this clause applies only if the contract includes a subcontracting plan incorporated under the terms of the clause at FAR 52.219-9, Small Business Subcontracting Plan. It does not apply to contracts awarded based on a subcontracting plan submitted and approved under paragraph (g) of the clause at 52.219-9.

(b) *Definitions*. As used in this clause:

"Indian" means any person who is a member of any Indian tribe, band, group, pueblo, or community which is recognized by the Federal Government as eligible for services from the Bureau of Indian Affairs (BIA) in accordance with 25 U.S.C. 1452(c) and any "Native" as defined in the Alaska Native Claims Settlement Act (43 U.S.C. 1601).

"Indian-organization" means the governing body of any Indian tribe or entity established or recognized by the governing body of an Indiana tribe for the purposes of 25 U.S.C., chapter 17.

"Indian-owned economic enterprise" means any Indian-owned (as determined by the Secretary of the Interior) commercial, industrial, or business activity established or organized for the purpose of profit, provided that Indian ownership shall constitute not less than 51 percent of the enterprise.

"Indian tribe" means any Indian tribe, band, group, pueblo, or community, including native villages and native groups (including corporations organized by Kenai, Juneau, Sitka, and Kodiak) as defined in the Alaska Native Claims Settlement Act, which is recognized by the Federal Government as eligible for services from BIA in accordance with 25 U.S.C. 1452(c).

"Interested party" means a prime contractor or an actual or prospective offeror whose direct economic interest would be affected by the award of a subcontract or by the failure to award a subcontract.

(c) The Contractor agrees to use its best efforts to give Indian organizations and Indian-owned economic enterprises (25 U.S.C. 1544) the maximum practicable opportunity to participate in the subcontracts it awards to the fullest extent consistent with efficient performance of its contract.

(1) The Contracting Officer and the Contractor, acting in good faith, may rely on the self-certification of an Indian organization or Indian-owned economic enterprise as to its eligibility, unless an interested party challenges its status or the Contracting Officer has independent reason to question that status. In the event of a challenge to the self-certification of a subcontractor, the Contracting Officer shall refer the matter to the U.S. Department of the Interior, Bureau of Indian Affairs (BIA), Attn: Chief, Division of Contracting and Grants Administration, 1849 C Street, NW, MS-334A-SIB, Washington, DC 20245. The BIA will determine the eligibility and notify the Contracting Officer. The 5 percent incentive payment will not be made within 50 workings days of subcontract award or while a challenge is pending. If a subcontractor is determined to be an ineligible participant, no incentive payment will be made under the Indian Incentive Program.

(2) The Contractor may request an adjustment under the Indian Incentive Program to the following:

(i) The estimated cost of a cost-type contract;

(ii) The target cost of a cost-plus-incentive-fee prime contract;

(iii) The target cost and ceiling price of a fixed price incentive prime contract.

(iv) The price of a firm-fixed-price prime contract.

(3) The amount of the equitable adjustment to the prime contract shall be 5 percent of the estimated cost, target cost, or firm-fixed-price included in the subcontract initially awarded to the Indian organization or Indian-owned economic enterprise.

(4) The Contractor has the burden of proving the amount claimed and must assert its request for an adjustment prior to completion of contract performance.

(d) The Contracting Officer, subject to the terms and conditions of the contract and the availability of funds, shall authorize an incentive payment of 5 percent of the amount paid to the subcontractor. The Contracting Officer shall seek funding in accordance with agency procedures. The Contracting Officer's decision is final and not subject to the Dispute clause of this contract.

(End of clause)

64. AUTHORIZATION AND CONSENT (JUL 1995) FAR 52.227-1

(a) The Government authorizes and consents to all use and manufacture, in performing any contract or any subcontract at any tier, of any invention described in and covered by a United States patent (1) embodied in the structure or composition of any article the delivery of which is accepted by the Government under this contract or (2) used in machinery, tools, or methods whose use necessarily results from compliance by the Contractor or a subcontractor with (i) specifications or written provisions forming a part of this contract or (ii) specific written instructions given by the

Contracting Officer directing the manner of performance. The entire liability to the Government for infringement of a patent of the United States shall be determined solely by the provisions of the indemnity clause, if any, included in this contract or any subcontract hereunder (including any lower-tier subcontract), and the Government assumes liability for all other infringement to the extent of the authorization and consent hereinabove granted.

(b) The Contractor agrees to include, and require inclusion of, this clause, suitably modified to identify the parties, in all subcontracts at any tier for supplies or services (including construction, architect-engineer services, and materials, supplies, models, samples, and design or testing services expected to exceed the simplified acquisition threshold); however, omission of this clause from any subcontract, including those at or below the simplified acquisition threshold, does not affect this authorization and consent.

(End of clause)

65. PATENT INDEMNITY--CONSTRUCTION CONTRACTS (APR 1984) FAR 52.227-4

Except as otherwise provided, the Contractor agrees to indemnify the Government and its officers, agents, and employees against liability, including costs and expenses, for infringement upon any United States patent (except a patent issued upon an application that is now or may hereafter be withheld from issue pursuant to a Secrecy Order under 35 U.S.C. 181) arising out of performing this contract or out of the use or disposal by or for the account of the Government of supplies furnished or work performed under this contract.

(End of clause)

66. RIGHTS IN SHOP DRAWINGS (APR 1966) DFARS 252.227-7033

(a) Shop drawings for construction means drawings, submitted to the Government by the Construction Contractor, subcontractor or any lower-tier subcontractor pursuant to a construction contract, showing in detail(i) the proposed fabrication and assembly of structural elements and (ii) the installation (i.e., form, fit, and attachment details) of materials or equipment. The Government may duplicate, use, and disclose in any manner and for any purpose shop drawings delivered under this contract.

(b) This clause, including this paragraph (b), shall be included in all subcontracts hereunder at any tier.

(End of clause)

67. ADDITIONAL BOND SECURITY (OCT 1997) FAR 52.228-2

The Contractor shall promptly furnish additional security required to protect the Government and persons supplying labor or materials under this contract if--

(a) Any surety upon any bond, or issuing financial institution for other security, furnished with this contract becomes unacceptable to the Government;

(b) Any surety fails to furnish reports on its financial condition as required by the Government;

(c) The contract price is increased so that the penal sum of any bond becomes inadequate in the opinion of the Contracting Officer; or

(d) An irrevocable letter of credit (ILC) used as security will expire before the end of the period of required security. If the Contractor does not furnish an acceptable extension or replacement ILC, or other acceptable substitute, at least 30 days before an ILC's scheduled expiration, the Contracting Officer has the right to immediately draw on the ILC.

(End of clause)

68. INSURANCE--WORK ON A GOVERNMENT INSTALLATION (JAN 1997) FAR 52.228-5

(a) The Contractor shall, at its own expense, provide and maintain during the entire performance of this contract, at least the kinds and minimum amounts of insurance required in the Schedule or elsewhere in the contract.

(b) Before commencing work under this contract, the Contractor shall notify the Contracting Officer in writing that the required insurance has been obtained. The policies evidencing required insurance shall contain an endorsement to the effect that any cancellation or any material change adversely affecting the Government's interest shall not be effective (1) for such period as the laws of the State in which this contract is to be performed prescribed or (2) until 30 days after the insurer or the Contractor gives written notice to the Contracting Officer, whichever period is longer.

(c) The Contractor shall insert the substance of this clause, including this paragraph (c), in subcontracts under this contract that require work on a Government installation and shall require subcontractors to provide and maintain the

insurance required in the Schedule or elsewhere in the contract. The Contractor shall maintain a copy of all subcontractors' proofs of required insurance, and shall make copies available to the Contracting Officer upon request.

(End of clause)

69. PLEDGES OF ASSETS (FEB 1992) FAR 52.228-11

(a) Offerors shall obtain from each person acting as an individual surety on a bid guarantee, a performance bond, or a payment bond--

(1) Pledge of assets; and

(2) Standard Form 28, Affidavit of Individual Surety.

(b) Pledges of assets from each person acting as an individual surety shall be in the form of--

(1) Evidence of an escrow account containing cash, certificates of deposit, commercial or Government securities, or other assets described in FAR 28.203-2 (except see 28.203-2(b)(2) with respect to Government securities held in book entry form) and/or;

(2) A recorded lien on real estate. The offeror will be required to provide--

(i) Evidence of title in the form of a certificate of title prepared by a title insurance company approved by the United States Department of Justice. This title evidence must show fee simple title vested in the surety along with any concurrent owner; whether any real estate taxes are due and payable; and any recorded encumbrances against the property, including the lien filed in favor of the Government as required by FAR 28.203-3(d);

(ii) Evidence of the amount due under any encumbrance shown in the evidence of title;

(iii) A copy of the current real estate tax assessment of the property or a current appraisal dated no earlier than 6 months prior to the date of the bond, prepared by a professional appraiser who certifies that the appraisal has been conducted in accordance with the generally accepted appraisal standards as reflected in the Uniform Standards of Professional Appraisal Practice, as promulgated by the Appraisal Foundation.

(End of clause)

70. PROSPECTIVE SUBCONTRACTOR REQUESTS FOR BONDS (OCT 1995) FAR 52.228-12

In accordance with Section 806(a)(3) of Pub. L. 102-190, as amended by Sections 2091 and 8105 of Pub. L. 103-355, upon the request of a prospective subcontractor or supplier offering to furnish labor or material for the performance of this contract for which a payment bond has been furnished to the Government pursuant to the Miller Act, the Contractor shall promptly provide a copy of such payment bond to the requester.

(End of clause)

71. FEDERAL, STATE, AND LOCAL TAXES (JAN 1991) FAR 52.229-3

(a) "Contract date," as used in this clause, means the date set for bid opening or, if this is a negotiated contract or a modification, the effective date of this contract or modification

"All applicable Federal, State, and local taxes and duties," as used in this clause, means all taxes and duties, in effect on the contract date, that the taxing authority is imposing and collecting on the transactions or property covered by this contract.

"After-imposed Federal tax," as used in this clause, means any new or increased Federal excise tax or duty, or tax that was exempted or excluded on the contract date but whose exemption was later revoked or reduced during the contract period, on the transactions or property covered by this contract that the Contractor is required to pay or bear as the result of legislative, judicial, or administrative action taking effect after the contract date. It does not include social security tax or other employment taxes.

"After-relieved Federal tax," as used in this clause, means any amount of Federal excise tax or duty, except social security or other employment taxes, that would otherwise have been payable, on the transactions or property covered by this contract, but which the Contractor is not required to pay or bear, or for which the Contractor obtains a refund or drawback, as the result of legislative, judicial, or administrative action taking effect after the contract date.

(b) The contract price includes all applicable Federal, State, and local taxes and duties.

(c) The contract price shall be increased by the amount of any after-imposed Federal tax, provided the Contractor warrants in writing that no amount for such newly imposed Federal excise tax or duty or rate increase was included in the contract price, as a contingency reserve or otherwise.

(d) The contract price shall be decreased by the amount of any after-relieved Federal tax.

(e) The contract price shall be decreased by the amount of any Federal excise tax or duty, except social security or other employment taxes, that the Contractor is required to pay or bear, or does not obtain a refund of, through the Contractor's fault, negligence, or failure to follow instructions of the Contracting Officer.

(f) No adjustment shall be made in the contract price under this clause unless the amount of the adjustment exceed $250.

(g) The Contractor shall promptly notify the Contracting Officer of all matters relating to any Federal excise tax or duty that reasonably may be expected to result in either an increase or decrease in the contract price and shall take appropriate action as the Contracting Officer directs.

(h) The Government shall, without liability, furnish evidence appropriate to establish exemption from any Federal, State, or local tax when the Contractor requests such evidence and a reasonable basis exists to sustain the exemption.

(End of clause)

72. SUPPLEMENTAL COST PRINCIPLES (DEC 1991) DFARS 52.231-7000

When the allowability of costs under this contract is determined in accordance with Part 31 of the Federal Acquisition Regulation (FAR), allowability shall also be determined in accordance with Part 231 of the Defense FAR Supplement, in effect on the date of this contract.

(End of clause)

73. PAYMENTS UNDER FIXED-PRICE CONSTRUCTION CONTRACTS (MAY 1997) FAR 52.232-5

(a) *Payment of price*. The Government shall pay the Contractor the contract price as provided in this contract.

(b) *Progress payments*. The Government shall make progress payments monthly as the work proceeds, or at more frequent intervals as determined by the Contracting Officer, on estimates of work accomplished which meets the standards of quality established under the contract, as approved by the Contracting Officer.

(1) The Contractor's request for progress payments shall include the following substantiation:

(i) An itemization of the amounts requested, related to the various elements of work required by the contract covered by the payment requested.

(ii) A listing of the amount included for work performed by each subcontractor under the contract.

(iii) A listing of the amount included for work performed by each subcontract under the contract.

(iv) A listing of the amounts previously paid to each such subcontractor under the contract.

(v) Additional supporting data in a form and detail required by the Contracting Officer.

(2) In the preparation of estimates, the Contracting Officer may authorize material delivered on the site and preparatory work done to be taken into consideration. Material delivered to the Contractor at locations other than the site also may be taken into consideration if--

(i) Consideration is specifically authorized by this contract; and

(ii) The Contractor furnishes satisfactory evidence that it has acquired title to such material and that the material will be used to perform this contract.

(c) *Contractor certification*. Along with each request for progress payments, the Contractor shall furnish the following certification, or payment shall not be made: (However, if the Contractor elects to delete paragraph (c)(4) from the certification, the certification is still acceptable.)

I hereby certify, to the best of my knowledge and belief, that--

(1) The amounts requested are only for performance in accordance with the specifications, terms, and conditions of the contract;

(2) Payments to subcontractors and suppliers have been made from previous payments received under the contract, and timely payments will be made from the proceeds of the payment covered by this certification, in accordance with subcontract agreements and the requirements of chapter 39 of Title 31, United States Code; and

(3) This request for progress payments does not include any amounts which the prime contractor intends to withhold or retain from a subcontractor or supplier in accordance with the terms and conditions of the subcontract; and

(4) This certification is not to be construed as final acceptance of a subcontractor's performance.

_____

(Name)

_____
(Title)

_____
(Date)

(d) *Refund of unearned amounts*. If the Contractor, after making a certified request for progress payments, discovers that a portion or all of such request constitutes a payment for performance by the Contractor that fails to conform to the specifications, terms, and conditions of this contract (hereinafter referred to as the "unearned amount"), the Contractor shall--

(1) Notify the Contracting Officer of such performance deficiency; and

(2) Be obligated to pay the Government an amount (computed by the Contracting Officer in the manner provided in paragraph (j) of this clause) equal to interest on the unearned amount from the date of receipt of the unearned amount until--

(i) The date the Contractor notifies the Contracting Officer that the performance deficiency has been corrected; or

(ii) The date the Contractor reduces the amount of any subsequent certified request for progress payments by an amount equal to the unearned amount.

(e) *Retainage*. If the Contracting Officer finds that satisfactory progress was achieved during any period for which a progress payment is to be made, the Contracting Officer shall authorize payment to be made in full. However, if satisfactory progress has not been made, the Contracting Officer may retain a maximum of 10 percent of the amount of the payment until satisfactory progress is achieved. When the work is substantially complete, the Contracting Officer may retain from previously withheld funds and future progress payments that amount the Contracting Officer considers adequate for protection of the Government and shall release to the Contractor all the remaining withheld funds. Also, on completion and acceptance of each separate building, public work, or other division of the contract, for which the price is stated separately in the contract, payment shall be made for the completed work without retention of a percentage.

(f) *Title, liability, and reservation of rights*. All material and work covered by progress payments made shall, at the time of payment, become the sole property of the Government, but this shall not be construed as--

(1) Relieving the Contractor from the sole responsibility for all material and work upon which payments have been made or the restoration of any damaged work; or

(2) Waiving the right of the Government to require the fulfillment of all of the terms of the contract.

(g) *Reimbursement for bond premiums*. In making these progress payments, the Government shall, upon request, reimburse the Contractor for the amount of premiums paid for performance and payment bonds (including coinsurance and reinsurance agreements, when applicable) after the Contractor has furnished evidence of full payment to the surety. The retainage provisions in paragraph (e) of this clause shall not apply to that portion of progress payments attributable to bond premiums.

(h) *Final payment*. The Government shall pay the amount due the Contractor under this contract after--

(1) Completion and acceptance of all work;

(2) Presentation of a properly executed voucher; and

(3) Presentation of release of all claims against the Government arising by virtue of this contract, other than claims, in stated amounts, that the Contractor has specifically excepted from the operation of the release. A release may also be required of the assignee if the Contractor's claim to amounts payable under this contract has been assigned under the Assignment of Claims Act of 1940 (31 U.S.C. 3727 and 41 U.S.C. 15).

(i) *Limitation because of undefinitized work*. Notwithstanding any provision of this contract, progress payments shall not exceed 80 percent on work accomplished on undefinitized contract actions. A "contract action" is any action resulting in a contract, as defined in FAR Subpart 2.1, including contract modifications for additional supplies or services, but not including contract modifications that are within the scope and under the terms of the contract, such as contract modifications issued pursuant to the Changes clause, or funding and other administrative changes.

(j) *Interest computation on unearned accounts*. In accordance with 31 U.S.C. 3903(c)(1), the amount payable under subparagraph (d)(2) of this clause shall be--

(1) Computed at the rate of average bond equivalent rates of 91-day Treasury bills auctioned at the most recent auction of such bills prior to the date the Contractor receives the unearned amount; and

(2) Deducted from the next available payment to the Contractor.

(End of clause)

74. INTEREST (JUNE 1996) FAR 52.232-17

(a) Except as otherwise provided in this contract under a Price Reduction for Defective Cost or Pricing Data clause or a Cost Accounting Standards clause, all amounts that become payable by the Contractor to the Government under this contract (net of any applicable tax credit under the Internal Revenue Code (26 U.S.C. 1481)) shall bear simple interest from the date due until paid unless paid within 30 days of becoming due. The interest rate shall be the interest rate established by the Secretary of the Treasury as provided in Section 12 of the Contract Disputes Act of 1978 (Public Law 95-563), which is applicable to the period in which the amount becomes due, as provided in paragraph (b) of this clause, and then at the rate applicable for each six-month period as fixed by the Secretary until the amount is paid.

(b) Amounts shall be due at the earliest of the following dates:

(1) The date fixed under this contract.

(2) The date of the first written demand for payment consistent with this contract, including any demand resulting from a default termination.

(3) The date the Government transmits to the Contractor a proposed supplemental agreement to confirm completed negotiations establishing the amount of debt.

(4) If this contract provides for revision of prices, the date of written notice to the Contractor stating the amount of refund payable in connection with a pricing proposal or a negotiated pricing agreement not confirmed by contract modification.

(c) The interest charge made under this clause may be reduced under the procedures prescribed in 32.614-2 of the Federal Acquisition Regulation in effect on the date of this contract.

(End of clause)

75. ASSIGNMENT OF CLAIMS (JAN 1986) ALTERNATE I (APR 1984) FAR 52.232-23 I

(a) The Contractor, under the Assignment of Claims Act, as amended, 31 U.S.C. 3727, 41 U.S.C. 15 (hereafter referred to as "the Act"), may assign it rights to be paid amounts due or to become due as a result of the performance of this contract to a bank, trust company, or other financing institution, including any Federal lending agency. The assignee under such an assignment may thereafter further assign or reassign its right under the original assignment to any type of financing institution described in the preceding sentence. Unless otherwise stated in this contract, payments to an assignee of any amounts due or to become due under this contract shall not, to the extent specified in the Act, be subject to reduction or setoff.

(b) Any assignment or reassignment authorized under the Act and this clause shall cover all unpaid amounts payable under this contract, and shall not be made to more than one party, except that an assignment or reassignment may be made to one party as agent or trustee for two or more parties participating in the financing of this contract.

(c) The Contractor shall not furnish or disclose to any assignee under this contract any classified document (including this contract) or information related to work under this contract until the Contracting Officer authorizes such action in writing.

(End of clause)

76. PROMPT PAYMENT FOR CONSTRUCTION CONTRACTS (JUN 1997) FAR 52.232-27

Notwithstanding any other payment terms in this contract, the Government will make invoice payments and contract financing payments under the terms and conditions specified in this clause. Payment shall be considered as being made on the day a check is dated or an electronic funds transfer. Definitions of pertinent terms are set forth in 32.902 of the Federal Acquisition Regulation. All days referred to in this clause are calendar days, unless otherwise specified. (However, see subparagraph (a)(3) concerning payments due on Saturdays, Sundays, and legal holidays.)

(a) *Invoice Payments*--(1) *Types of invoice payments.* For purposes of this clause, there are several types of invoice payments which may occur under this contract, as follows:

(i) Progress payments, if provided for elsewhere in this contract, based on Contracting Officer approval of the estimated amount and value of work or services performed, including payments for reaching milestones in any project:

(A) The due date for making such payments shall be 14 days after receipt of the payment request by the designated billing office. However, if the designated billing office fails to annotate the payment request with the actual date of receipt at the time of receipt, the payment due date shall be the 14th day after the date of the Contractor's payment request, provided a proper payment request is received and there is no disagreement over quantity, quality, or Contractor compliance with contract requirements.

(B) The due date for payment of any amounts retained by the Contracting Officer in accordance with the clause at 52.232-5, Payments Under Fixed-Price Construction Contracts, shall be as specified in the contract or, if not specified 30 days after approval for release to the Contractor by the Contracting Officer.

(ii) Final payments based on completion and acceptance of all work and presentation of release of all claims against the Government arising by virtue of the contract, and payments for partial deliveries that have been accepted by the Government (e.g., each separate building, public work, or other division of the contract for which the price is stated separately in the contract):

(A) The due date for making such payments shall be either the 30th day after receipt by the designated billing office of a proper invoice from the Contractor, or the 30th day after Government acceptance of the work or services completed by the Contractor, whichever is later. If the designated billing office fails to annotate the invoice with the date of actual receipt at the time of receipt, the invoice payment due date shall be deemed to be the 30th day after the date the Contractor's invoice, provided a proper invoice is received and there is no disagreement over quantity, quality, or Contractor compliance with contract requirements.

(B) On a final invoice where the payment amount is subject to contract settlement actions (e.g., release of claims), acceptance shall be deemed to have occurred on the effective date of the contract settlement.

(2) *Contractor's invoice.* The Contractor shall prepare and submit invoices to the designated billing office specified in the contract. A proper invoice must include the items listed in paragraphs (a)(2)(i) through (a)(2)(ix) of this clause. If the invoice does not comply with these requirements, it shall be returned within 7 days after the date the designated billing office received the invoice, with a statement of the reasons why it is not a property invoice. Untimely notification will be taken into account in computing any interest penalty owed the Contractor in the manner described in subparagraph (a)(4) of this clause.

(i) Name and address of the Contractor

(ii) Invoice date. (The Contractor is encouraged to date invoices as close as possible to the date of mailing or transmission.)

(iii) Contract number or other authorization for work or services performed (including order number and contract line item number).

(iv) Description of work or services performed.

(v) Delivery and payment terms (e.g., prompt payment discount terms).

(vi) Name and address of Contractor official to whom payment is to be sent (must be the same as that in the contract or in a proper notice of assignment).

(vii) Name (where practicable), title, phone number, and mailing address of person to be notified in event of a defective invoice.

(viii) For payments described in paragraph (a)(1)(i) of this clause, substantiation of the amounts requested and certification in accordance with the requirements of the clause at 52.232-5, Payments Under Fixed-Price Construction Contracts.

(ix) Any other information or documentation required by the contract.

(x) While not required, the Contractor is strongly encouraged to assign an identification number to each invoice.

(3) *Interest penalty.* An interest penalty shall be paid automatically by the designated payment office, without request from the Contractor, if payment is not made by the due date and the conditions listed in subdivisions (a)(3)(i) through (a)(3)(iii) of this clause are met, if applicable. However, when the due date falls on a Saturday, Sunday, or legal holiday when Federal Government offices are closed and Government business is not expected to be conducted, payment will be made on the following business day without incurring a late payment interest penalty.

(i) A proper invoice was received by the designated billing office.

(ii) A receiving report or other Government documentation authorizing payment was processed and there was no disagreement over quantity, quality, Contractor compliance with any contract term or condition, or requested progress payment amount.

(iii) In the case of a final invoice for any balance of funds due the Contractor for work or services performed, the amount was not subject to further contract settlement actions between the Government and the Contractor.

(4) *Computing penalty amount.* The interest penalty shall be at the rate established by the Secretary of the Treasury under section 12 of the Contract Disputes Act of 1978 (41 U.S.C. 611) that is in effect on the day after the due date, except where the interest penalty is prescribed by other governmental authority (e.g., tariffs). This rate is referred to

as the "Renegotiation Board Interest Rate," and it is published in the *Federal Register* semiannually on or about January 1 and July 1. The interest penalty shall accrue daily on the invoice principal payment amount approved by the Government until the payment date of such approved principal amount, and will be compounded in 30-day increments inclusive from the first day after the due date through the payment date. That is, interest accrued at the end of any 30-day period will be added to the approved invoice principal payment amount and be subject to interest penalties if not paid in the succeeding 30-day period. If the designated billing office failed to notify the Contractor of a defective invoice within the periods prescribed in subparagraph (a)(2) of this clause, the due date on the corrected invoice will be adjusted by subtracting the number of days taken beyond the prescribed notification of defects period. Any interest penalty owed the Contractor will be based on this adjusted due date. Adjustments will be made by the designated payment office for errors in calculating interest penalties.

(i) For the sole purpose of computing an interest penalty that might be due the Contractor for payments described in subdivision (a)(1)(ii) of this clause, Government acceptance or approval shall be deemed to have occurred constructively on the 7th day after the Contractor has completed the work or services in accordance with the terms and conditions of the contract. In the event that actual acceptance or approval occurs within the constructive acceptance or approval period the determination of an interest penalty shall be based on the actual date of acceptance or approval. Constructive acceptance or constructive approval requirements do not apply if there is a disagreement over quantity, quality, or Contractor compliance with a contract provision. These requirements also do not compel Government officials to accept work or services, approve Contractor estimates, perform contract administration functions, or make payment prior to fulfilling their responsibilities.

(ii) The following periods of the time will not be included in the determination of an interest penalty:

(A) The period taken to notify the Contractor of defects in invoices submitted to the Government, but this may not exceed 7 days.

(B) The period between the defects notice and resubmission of the corrected invoice by the Contractor.

(C) For incorrect electronic funds transfer (EFT) information, in accordance with the EFT clause of this contract

(iii) Interest penalties will not continue to accrue after the filing of a claim for such penalties under the clause at 52.233-1, Disputes, or for more than 1 year. Interest penalties of less than $1.00 need not be paid.

(iv) Interest penalties are not required on payment delays due to disagreement between the Government and the Contractor over the payment amount or other issues involving contract compliance, or on amounts temporarily withheld or retained in accordance with the terms of the contract. Claims involving disputes, and any interest that may be payable, will be resolved in accordance with the clause at 52.233-1, Disputes.

(5) *Prompt payment discounts.* An interest penalty shall also be paid automatically by the designated payment office, without request from the Contractor, if a discount for prompt payment is taken improperly. The interest penalty will be calculated on the amount of discount taken for the period beginning with the first day after the end of the discount period through the date when the Contractor is paid.

(6) *Additional interest penalty.* (i) If this contract was awarded on or after October 1, 1989, a penalty amount, calculated in accordance with subdivision (a)(6)(iii) of this clause, shall be paid in addition to the interest penalty amount if the Contractor--

(A) Is owed an interest penalty of $1 or more;

(B) Is not paid the interest penalty within 10 days after the date the invoice amount is paid; and

(C) Makes a written demand to the designated payment office for additional penalty payment, in accordance with subdivision (a)(6)(ii) of this clause, postmarked not later than 40 days after the date the invoice amount is paid.

(ii) (A) Contractors shall support written demands for additional penalty payments with the following data. No additional data shall be required. Contractors shall--

(1) Specifically assert that late payment interest is due under a specific invoice, and request payment of all overdue late payment interest penalty and such additional penalty as may be required;

(2) Attach a copy of the invoice on which the unpaid late payment interest was due; and

(3) State that payment of the principal has been received, including the date of receipt.

(B) Demands may be postmarked on or before the 40th day after payment was made, except that--

(1) If the postmarked is illegible or nonexistent, the demand must have been received and annotated with the date of receipt by the designated payment office on or before the 40th day after payment was made; or

(2) If the postmark is illegible or nonexistent and the designated payment office fails to make the required annotation, the demand's validity will be determined by the date the Contractor has placed on the demand; provided such date is no later than the 40th day after payment was made.

(iii) (A) The additional penalty shall be equal to 100 percent of any original late payment, except--

(1) The additional penalty shall not exceed $5,000;

(2) The additional penalty shall never be less than $25; and

(3) No additional penalty is owed if the amount of the underlying interest penalty is less than $1.

(B) If the interest penalty ceases to accrue in accordance with the limits stated in subdivision (a)(4)(iii) of this clause, the amount of the additional penalty shall be calculated on the amount of interest penalty that would have accrue in the absence of these limits, subject to the overall limits on the additional penalty specified in subdivision (a)(6)(iii)(a) of the clause.

(C) For determining the maximum and minimum additional penalties, the test shall be the interest penalty due on each separate payment made for each separate contract. The maximum and minimum additional penalty shall not be based upon individual invoices unless the invoices are paid separately. Where payments are consolidated for disbursing purposes, the maximum and minimum additional penalty determination shall be made separately for each contract therein.

(D) The additional penalty does not apply to payments regulated by other Government regulations (e.g., payments under utility contracts subject to tariffs and regulation).

(b) *Contract Financing Payments*. (1) *Due dates for recurring financing payments.* If this contract provides for contract financing, requests for payment shall be submitted to the designated billing office as specified in this contract or as directed by the Contracting Officer. Contract financing payment shall be made on the 30th day after receipt of a proper contract financing request by the designated billing office. In the event that an audit or other review of a specific financing request is required to ensure compliance with the terms and conditions of the contract, the designated payment office is not compelled to make payment by the due date specified.

(2) *Due dates for other contract financing.* For advance payments, loans, or other arrangements that do not involve recurring submissions of contract financing requests, payment shall be made in accordance with the corresponding contract terms or as directed by the Contracting Officer.

(3) *Interest penalty not applicable.* Contract financing payments shall not be assessed an interest penalty for payment delays.

(c) *Subcontract clause requirements.* The Contractor shall include in each subcontract for property or services (including a material supplier) for the purpose of performing this contract the following:

(1) *Prompt payment for subcontractors.* A payment clause which obligates the Contractor to pay the subcontractor for satisfactory performance under its subcontract not later than 7 days from receipt of payment out of such amounts as are paid to the Contractor under this contract.

(2) *Interest for subcontractors.* An interest penalty clause which obligates the Contractor to pay to the subcontractor an interest penalty for each payment not made in accordance with the payment clause--

(i) For the period beginning on the day after the required payment date and ending on the date on which payment of the amount due to made; and

(ii) Computed at the rate of interest established by the Secretary of the Treasury, and published in the *Federal Register*, for interest payments under section 12 of the Contract Disputes Act of 1978 (41 U.S.C. 611) in effect at the time the Contractor accrues the obligations to pay an interest penalty.

(3) *Subcontract clause flowdown* A clause requiring each subcontractor to include a payment clause and an interest penalty clause conforming to the standards set forth in subparagraphs (c)(1) and (c)(2) of this clause in each of its subcontracts, and to require each of its subcontractors to include such clauses in their subcontracts with each lower-tier subcontractor or supplier.

(d) *Subcontract clause interpretation.* The clauses required by paragraph (c) of this clause shall not be construed to impair the right of Contractor or a subcontractor at any tier to negotiate, and to include in their subcontract, provisions that--

(1) *Retainage permitted.* Permit the Contractor or a subcontractor to retain (without cause) a specified percentage of each progress payment otherwise due to a subcontractor for satisfactory performance under the subcontract without incurring any obligation to pay a late payment interest penalty, in accordance with terms and conditions agreed to

by the parties to the subcontract, giving such recognition as the parties deem appropriate to the ability of a subcontractor to furnish a performance bond and payment bond;

(2) *Withholding permitted.* Permit the Contractor or subcontractor to make a determination that part or all of the subcontractor's request for payment may be withheld in accordance with the subcontract agreement; and

(3) *Withholding requirements.* Permit such withholding without incurring any obligation to pay a late payment penalty if--

(i) A notice conforming to the standards of paragraph (g) of this clause previously has been furnished to the subcontractor; and

(ii) A copy of any notice issued by a Contractor pursuant to subdivision (d)(3)(i) of this clause has been furnished to the Contracting Officer.

(e) *Subcontractor withholding procedures.* If a Contractor, after making a request for payment to the Government but before making a payment to a subcontractor for the subcontractor's performance covered by the payment request, discovers that all or a portion of the payment otherwise due such subcontractor is subject to withholding from the subcontractor in accordance with the subcontract agreement, then the Contractor shall--

(1) *Subcontractor notice.* Furnish to the subcontractor a notice conforming to the standards of paragraph (g) of this clause as soon as practicable upon ascertaining the cause giving rise to a withholding, but prior to the due date for subcontractor payment;

(2) *Contracting Officer notice.* Furnish to the Contracting Officer, as soon as practicable, a copy of the notice furnished to the subcontractor pursuant to subparagraph (e)(1) of this clause;

(3) *Subcontractor progress payment reduction.* Reduce the subcontractor's progress payment by an amount not to exceed the amount specified in the notice of withholding furnished under subparagraph (e)(1) of this clause;

(4) *Subsequent subcontractor payment.* Pay the subcontractor as soon as practicable after the correction of the identified subcontract performance deficiency, and--

(i) Make such payment within--

(A) Seven days after correction of the identified subcontract performance deficiency (unless the funds therefor must be recovered from the Government because of a reduction under subdivision (e)(5)(i)) of this clause; or

(B) Seven days after the Contractor recovers such funds from the Government; or

(ii) Incur an obligation to pay a late payment interest penalty computed at the rate of interest established by the Secretary of the Treasury, and published in the *Federal Register*, for interest payments under section 12 of the Contracts Disputes Act of 1978 (41 U.S.C. 611) in effect at the time the Contractor accrues the obligation to pay an interest penalty;

(5) *Notice to Contracting Officer.* Notify the Contracting Officer upon--

(i) Reduction of the amount of any subsequent certified application for payment; or

(ii) Payment to the subcontractor of any withheld amounts of a progress payment, specifying--

(A) The amounts withheld under subparagraph (e)(1) of this clause; and

(B) The dates that such withholding began and ended; and

(6) *Interest to Government.* Be obligated to pay to the Government an amount equal to interest on the withheld payments (computed in the manner provided in 31 U.S.C. 3903(c)(1)), from the 8th day after receipt of the withheld amounts from the Government until--

(i) The day the identified subcontractor performance deficiency is corrected; or

(ii) The date that any subsequent payment is reduced under subdivision (e)(5)(i) of this clause.

(f) *Third-party deficiency reports.* (1) *Withholding from subcontractor.* If a Contractor, after making payment to a first-tier subcontractor, receives from a supplier or subcontractor of the first-tier subcontractor (hereafter referred to as a "second-tier subcontractor") a written notice in accordance with section 2 of the Act of August 24, 1935 (40 U.S.C. 270b, Miller Act), asserting a deficiency in such first-tier subcontractor's performance under the contract for which the Contractor may be ultimately liable, and the Contractor determines that all or a portion of future payments otherwise due such first-tier subcontractor is subject to withholding in accordance with the subcontract agreement, the Contractor may, without incurring an obligation to pay an interest penalty under subparagraph (e)(6) of this clause--

(i) Furnish to the first-tier subcontractor a notice conforming to the standards of paragraph (g) of this clause as soon as practicable upon making such determination; and

(ii) Withhold from the first-tier subcontractor's next available progress payment or payments an amount not to exceed the amount specified in the notice of withholding furnished under paragraph (f)(1)(i) of this clause.

(2) *Subsequent payment or interest charge.* As soon as practicable, but not later than 7 days after receipt of satisfactory written notification that the identified subcontract performance deficiency has been corrected, the Contractor shall (i) Pay the amount withheld under paragraph (f)(1)(ii) of this clause to such first-tier subcontractor; or (ii) Incur an obligation to pay a late payment interest penalty to such first-tier subcontractor computed at the rate of interest established

by the Secretary of the Treasury, and published in the *Federal Register*, for interest payments under section 12 of the Contracts Disputes Act of 1978 (41 U.S.C. 611) in effect at the time the Contractor accrues the obligation to pay an interest penalty.

(g) *Written notice of subcontractor withholding.* A written notice of any withholding shall be issued to a subcontractor (with a copy to the Contracting Officer of any such notice issued by the Contractor), specifying--

(1) The amount to be withheld;

(2) The specific causes for the withholding under the terms of the subcontract; and

(3) The remedial actions to be taken by the subcontractor in order to receive payment of the amounts withheld.

(h) *Subcontractor payment entitlement.* The Contractor may not request payment from the Government of any amount withheld or retained in accordance with paragraph (d) of this clause until such time as the Contractor has determined and certified to the Contracting Officer that the subcontractor is entitled to the payment of such amount.

(i) *Prime-subcontractor disputes.* A dispute between the Contractor and subcontractor relating to the amount or entitlement of a subcontractor to a payment or a late payment interest penalty under a clause included in the subcontract pursuant to paragraph (c) of this clause does not constitute a dispute to which the United States is a party. The United States may not be interpleaded in any judicial or administrative proceeding involving such a dispute.

(j) *Preservation of prime-subcontractor rights.* Except as provided in paragraph (i) of this clause, this clause shall not limit or impair any contractual, administrative, or judicial remedies otherwise available to the Contractor or a subcontractor in the event of a dispute involving late payment or nonpayment by the Contractor or deficient subcontract performance or nonperformance by a subcontractor.

(k) *Non-recourse for prime contractor interest penalty.* The Contractor's obligation to pay an interest penalty to a subcontractor pursuant to the clauses included in a subcontract under paragraph (c) of this clause shall not be construed to be an obligation of the United States for such interest penalty. A cost reimbursement claim may not include any amount for reimbursement of such interest penalty.

(End of clause)

77. PAYMENT BY ELECTRONIC FUNDS TRANSFER (CCR) (JUN 1998)
DFARS 252.232-7009

(a) Method of payment. (1) All payments by the Government under this contract shall be made by electronic funds transfer (EFT), except as provided in paragraph (a)(2) or (b) of this clause. As used in this clause, the term "EFT" refers to the funds transfer and may also include the payment information transfer.

(2) In the event the Government is unable to release one or more payments by EFT, the Contractor agrees to either (i) accept payment by check or some other mutually agreeable method of payment, or (ii) request the Government to extend the payment due date until such time as the Government can make payment by EFT (but see paragraph (e) of this clause).

(b) Alternative contractor certification. If the Contractor certifies in writing, as part of its registration with the Central Contractor Registration (CCR) database that it does not have an account with a financial institution and does not have an authorized payment agent, payment shall be made by check to the remittance address contained in the CCR database. All contractor certifications will expire on January 1, 1999.

(c) Contractor's EFT information. Except as provided in paragraph (b) of this clause, the Government shall make payment to the Contractor using the EFT information contained in the CCR database. In the event that the EFT information changes, the Contractor shall be responsible for providing the updated information to the CCR database.

(d) Mechanisms for EFT payment. The Government may make payment by EFT through either an Automated Clearing House subject to the banking laws of the United States or the Federal Reserve Wire Transfer System.

(e) Suspension of payment. If the Contractor's EFT information in the CCR database is incorrect and the Contractor has not certified under paragraph (b) of this clause, the Government need not make payment to the Contractor under this contract until correct EFT information or certification is entered into the CCR database; and any invoice or contract financing request shall be deemed not to be a proper invoice for the purpose of prompt payment under this contract. The prompt payment terms of the contract regarding notice of an improper invoice and delays in accrual of interest penalties apply.

(f) Contractor EFT arrangements. If the Contractor has identified multiple payment receiving points (i.e., more than one remittance address or EFT information set) in the CCR database, and the Contractor has not notified the Government of the payment receiving point applicable to this contract, the Government shall make payment to the first payment receiving point (EFT information set or remittance address as applicable) listed in the CCR database.

(g) Liability for uncompleted or erroneous transfers. (1) If an uncompleted or erroneous transfer occurs because the Government failed to use the Contracto5r's EFT information in the correct manner, the Government remains responsible for—

(i) Making a correct payment;
(ii) Paying any prompt payment penalty due; and
(iii) Recovering any erroneously directed funds.

(2) If an uncompleted or erroneous transfer occurs because the Contractor's EFT information was incorrect, or was revised within 30 days of Government release of the EFT payment transaction instruction to the Federal Reserve System, and—

(i) If the funds are no longer under the control of the payment office, the Government is deemed to have made payment and the contractor is responsible for recovery of any erroneously directed funds; or

(ii) If the funds remain under the control of the payment office, the Government shall not make payment, and the provisions of paragraph (e) of this clause shall apply.

(h) EFT and prompt payment. A payment shall be deemed to have been made in a timely manner in accordance with the prompt payment terms of this contract if, in the EFT payment transaction instruction released to the Federal Reserve System, the date specified for settlement of the payment is on or before the prompt payment due date, provided the specified payment date is a valid date under the rules of the Federal Reserve System.

(i) EFT and assignment of claims. If the Contractor assigns the proceeds of this contract as provided for in the assignment of claims terms of this contract, the Contractor shall require as a condition of any such assignment, that the assignee register in the CCR database and be paid by EFT in accordance with the terms of this clause. In all respects, the requirements of this clause shall apply to the assignee as if it were the Contractor. EFT information that shows the ultimate recipient of the transfer to be other than the Contractor, in the absence of a proper assignment of claims acceptable to the Government, is incorrect EFT information within the meaning of paragraph (e) of this clause.

(j) Liability for change of EFT information by financial agent. The Government is not liable for errors resulting from changes to EFT information made by the Contractor's financial agent.

(k) Payment information. The payment or disbursing office shall forward to the Contractor available payment information that is suitable for transmission as of the date of release of the EFT instruction to the Federal Reserve System. The Government may request the Contractor to designate a desired format and method(s) for delivery of payment information from a list of formats and methods the payment office is capable of executing. However, the Government does not guarantee that any particular format or method of delivery is available at any particular payment office and retains the latitude to use the format and delivery method most convenient to the Government. If the Contractor has certified in accordance with paragraph (b) of this clause or if the Government otherwise make payment by check in accordance with paragraph (a) of this clause, the Government shall mail the payment information to the remittance address contained in the CCR database.

(End of clause)

78. DISPUTES (DEC 1998) FAR 52.233-1

(a) This contract is subject to the Contract Disputes Act of 1978, as amended (41 U.S.C. 601-613).

(b) Except as provided in the Act, all disputes arising under or relating to this contract shall be resolved under this clause.

(c) "Claim," as used in this clause, means a written demand or written assertion by one of the contracting parties seeking, as a matter of right, the payment of money in a sum certain, the adjustment or interpretation of contract terms, or other relief arising under or relating to this contract. A claim arising under a contract, unlike a claim relating to that contract, is a claim that can be resolved under a contract clause that provides for the relief sought by the claimant. However, a written demand or written assertion by the Contractor seeking the payment of money exceeding $100,000 is not a claim under the Act until certified as required by subparagraph (d)(2) of this clause. A voucher, invoice, or other routine request for payment that is not in dispute when submitted is not a claim under the Act. The submission may be converted to a claim under the Act, by complying with the submission and certification requirements of this clause, if it is disputed either as to liability or amount or is not acted upon in a reasonable time.

(d)(1) A claim by the Contractor shall be made in writing and, unless otherwise stated in this contract, submitted within 6 years after accrual of the claim to the Contracting Officer for a written decision. A claim by the Government against the Contractor shall be subject to a written decision by the Contracting Officer.

(2)(i) Contractors shall provide the certification specified in paragraph (d)(2)(iii) of this clause when submitting any claim exceeding $100,000.

(ii) The certification requirement does not apply to issues in controversy that have not been submitted as all or part of a claim.

(iii) The certification shall state as follows: "I certify that the claim is made in good faith; that the supporting data are accurate and complete to the best of my knowledge and belief; that the amount requested accurately reflects the

contract adjustment for which the Contractor believes the Government is liable; and that I am duly authorized to certify the claim on behalf of the Contractor."

(3) The certification may be executed by any person duly authorized to bind the Contractor with respect to the claim.

(e) For Contractor claims of $100,000 or less, the Contracting Officer must, if requested in writing by the Contractor, render a decision within 60 days of the request. For Contractor-certified claims over $100,000, the Contracting Officer must, within 60 days, decide the claim or notify the Contractor of the date by which the decision will be made.

(f) The Contracting Officer's decision shall be final unless the Contractor appeals or files a suit as provided in the Act.

(g) If the claim by the Contractor is submitted to the Contracting Officer or a claim by the Government is presented to the Contractor, the parties, by mutual consent, may agree to use alternative disputes resolution (ADR). If the Contractor refuses an offer for ADR, the Contractor shall inform the Contracting Officer, in writing, of the Contractor's specific reasons for rejecting the offer.

(h) The government shall pay interest on the amount found due and unpaid from (1) the date that the Contracting Officer receives the claim (certified, if required); or (2) the date that payment otherwise would be due, if that date is later, until the date of payment. With regard to claims having defective certification, as defined in FAR 33.201, interest shall be paid from the date that the Contracting Officer initially receives the claim. Simple interest on claim shall be paid at the rate, fixed by the Secretary of the Treasury as provided in the Act, which is applicable to the period during which the Contracting Officer receives the claim and then at the rate applicable for each 6-month period as fixed by the Treasury Secretary during the pendency of the claim.

(i) The Contractor shall proceed diligently with performance of this contract, pending final resolution of any request for relief, claim, appeal, or action arising under the contract, and comply with any decision of the Contracting Officer.

(End of clause)

79. PROTEST AFTER AWARD (AUG 1996) FAR 52.233-3

(a) Upon receipt of a notice of protest (as defined in FAR 33.101) or a determination that a protest is likely (see FAR 33.102(d)), the Contracting Officer may, by written order to the Contractor, direct the Contractor to stop performance of the work called for by this contract. The order shall be specifically identified as a stop-work order issued under this clause. Upon receipt of the order, the Contractor shall immediately comply with its terms and take all reasonable steps to minimize the incurrence of costs allocable to the work covered by the order during the period of work stoppage. Upon receipt of the final decision in the protest, the Contracting Officer shall either--

(1) Cancel the stop-work order; or

(2) Terminate the work covered by the order as provided in the Default, or the Termination for Convenience of the Government, clause of this contract.

(b) If a stop-work order issued under this clause is canceled either before or after a final decision in the protest, the Contractor shall resume work. The Contracting Officer shall make an equitable adjustment in the delivery schedule or contract price, or both, and the contract shall be modified, in writing, accordingly, if--

(1) The stop-work order results in an increase in the time required for, or in the Contractor's cost properly allocable to, the performance of any part of this contract; and

(2) The Contractor asserts its right to an adjustment within 30 days after the end of the period of work stoppage; *provided*, that if the Contracting Officer decides the facts justify the action, the Contracting Officer may receive and act upon a proposal submitted at any time before final payment under this contract.

(c) If a stop-work order is not canceled and the work covered by the order is terminated for the convenience of the Government, the Contracting Officer shall allow reasonable costs resulting from the stop-work order in arriving at the termination settlement.

(d) If a stop-work order is not canceled and the work covered by the order is terminated for default, the Contracting Officer shall allow, by equitable adjustment or otherwise, reasonable costs resulting from the stop-work order.

(e) The Government's rights to terminate this contract at any time are not affected by action taken under this clause.

(f) If, as the result of the Contractor's intentional or negligent misstatement, misrepresentation, or miscertification, a protest related to this contract is sustained, and the Government pays costs, as provided in FAR 33.102(b)(2) or 33.104(h)(1), the Government may require the Contractor to reimburse the Government the amount of such costs. In addition to any other remedy available, and pursuant to the requirements of Subpart 32.6, the Government may collect this debt by offsetting the amount against any payment due the Contractor under any contract between the Contractor and the Government.

(End of clause)

80. DIFFERING SITE CONDITIONS (APR 1984) FAR 52.236-2

(a) The Contractor shall promptly, and before the conditions are disturbed, give a written notice to the Contracting Officer of (1) subsurface or latent physical conditions at the site which differ materially from those indicated in this contract, or (2) unknown physical conditions at the site, of an unusual nature, which differ materially from those ordinarily encountered and generally recognized as inhering in work of the character provided for in the contract.

(b) The Contracting Officer shall investigate the site conditions promptly after receiving the notice. If the conditions do materially so differ and cause an increase or decrease in the Contractor's cost of, or the time required for, performing any part of the work under this contract, whether or not changed as a result of the conditions, an equitable adjustment shall be made under this clause and the contract modified in writing accordingly.

(c) No request by the Contractor for an equitable adjustment to the contract under this clause shall be allowed, unless the Contractor has given the written notice required; *provided*, that the time prescribed in paragraph (a) of this clause for giving written notice may be extended by the Contracting Officer.

(d) No request by the Contractor for an equitable adjustment to the contract for differing site conditions shall be allowed if made after final payment under this contract.

(End of clause)

81. SITE INVESTIGATION AND CONDITIONS AFFECTING THE WORK (APR 1984) FAR 52.236-3

(a) The Contractor acknowledges that it has taken steps reasonably necessary to ascertain the nature and location of the work, and that it has investigated and satisfied itself as to the general and local conditions which can affect the work or its cost, including but not limited to (1) conditions bearing upon transportation, disposal, handling, and storage of materials; (2) the availability of labor, water, electric power, and roads; (3) uncertainties of weather, river stages, tides, or similar physical conditions at the site; (4) the conformation and conditions of the ground; and (5) the character of equipment and facilities needed preliminary to and during work performance. The Contractor also acknowledges that it has satisfied itself as to the character, quality, and quantity of surface and subsurface materials or obstacles to be encountered insofar as to this information is reasonably ascertainable from an inspection of the site, including all exploratory work done by the Government, as well as from the drawings and specifications made a part of this contract. Any failure of the Contractor to take the actions described and acknowledged in this paragraph will not relieve the Contractor from responsibility for estimating properly the difficulty and cost of successfully performing the work, or for proceeding to successfully perform the work without additional expense to the Government.

(b) The Government assumes no responsibility for any conclusions or interpretations made by the Contractor based on the information made available by the Government. Nor does the Government assume responsibility for any understanding reached or representation made concerning conditions that can affect the work by any of its officers or agents before the execution of this contract, unless that understanding or representation is expressly stated in this contract.

(End of clause)

82. MATERIAL AND WORKMANSHIP (APR 1984) FAR 52.236-5

(a) All equipment, material, and articles incorporated into the work covered by this contract shall be new and of the most suitable grade for the purpose intended, unless otherwise specifically provided in this contract. References in the specifications to equipment, material, articles, or patented processes by trade name, make, or catalog number, shall be regarded as establishing a standard of quality and shall not be construed as limiting competition. The Contractor may, at its option, use any equipment, material, article, or process that, in the judgment of the Contracting Officer, is equal to that named in the specifications, unless otherwise specifically provided in this contract.

(b) The Contractor shall obtain the Contracting Officer's approval of the machinery and mechanical and other equipment to be incorporated into the work. When requesting approval, the Contractor shall furnish to the Contracting Officer the name of the manufacturer, the model number, and other information concerning the performance, capacity, nature, and rating of the machinery and mechanical and other equipment. When required by this contract or by the Contracting Officer, the Contractor shall also obtain the Contracting Officer's approval of the material or articles which the Contractor contemplates incorporating into the work. When requesting approval, the Contractor shall provide all information concerning the material or articles. When directed to do so, the Contractor shall submit samples for approval at the Contractor's expense, with all shipping at the Contractor's expense, with all shipping charges prepaid. Machinery,

equipment, material, and articles that to not have the required approval shall be installed or used at the risk of subsequent rejection.

(c) All work under this contract shall be performed in a skillful and workmanlike manner. The Contracting Officer may require, in writing, that the Contractor remove from the work any employee the Contracting Officer deems incompetent, careless, or otherwise objectionable.

(End of clause)

83. SUPERINTENDENCE BY THE CONTRACTOR (APR 1984) FAR 52.236-6

At all times during performance of this contract and until the work is completed and accepted, the Contractor shall directly superintend the work or assign and have on the worksite a competent superintendent who is satisfactory to the Contracting Officer and has authority to act for the Contractor.

(End of clause)

84. PERMITS AND RESPONSIBILITIES (NOV 1991) FAR 52.236-7

The Contractor shall, without additional expense to the Government, be responsible for obtaining any necessary licenses and permits, and for complying with any Federal, State, and municipal laws, codes, and regulations applicable to the performance of the work. The Contractor shall also be responsible for all damages to persons or property that occur as a result of the Contractor's fault or negligence. The Contractor shall also be responsible for all materials delivered and work performed until completion and acceptance of the entire work, except for any completed unit of work which may have been accepted under the contract.

(End of clause)

85. OTHER CONTRACTS (APR 1984) FAR 52.236-8

The Government may undertake or award other contracts for additional work at or near the site of the work under this contract. The Contractor shall fully cooperate with the other contractors and with Government employees and shall carefully adapt scheduling and performing the work under this contract to accommodate the additional work, heeding any direction that may be provided by the Contracting Officer. The Contractor shall not commit or permit any act that will interfere with the performance of work by any other contractor or by Government employees.

(End of clause)

86. PROTECTION OF EXISTING VEGETATION, STRUCTURES, EQUIPMENT, UTILITIES, AND IMPROVEMENTS (APR 1984) FAR 52.236-9

(a) The Contractor shall preserve and protect all structures, equipment, and vegetation (such as trees, shrubs, and grass) on or adjacent to the work site, which are not to be removed and which do not unreasonably interfere with the work required under this contract. The Contractor shall only remove trees when specifically authorized to do so, and shall avoid damaging vegetation that will remain in place. If any limbs or branches of trees are broken during contract performance, or by the careless operation of equipment, or by workmen, the Contractor shall trim those limbs or branches with a clean cut and paint the cut with a tree-pruning compound as directed by the Contracting Officer.

(b) The Contractor shall protect from damage all existing improvements and utilities (1) at or near the work site, and (2) on adjacent property of a third party, the locations of which are made known to or should be known by the Contractor. The Contractor shall repair any damage to those facilities, including those that are the property of a third party, resulting from failure to comply with the requirements of this contract or failure to exercise reasonable care in performing the work. If the Contractor fails or refuses to repair the damage promptly, the Contracting Officer may have the necessary work performed and charge the cost to the Contractor.

(End of clause)

87. OPERATIONS AND STORAGE AREAS (APR 1984) FAR 52.236-10

(a) The Contractor shall confine all operations (including storage of materials) on Government premises to areas authorized or approved by the Contracting Officer. The Contractor shall hold and save the Government, its officers and agents, free and harmless from liability of any nature occasioned by the Contractor's performance.

(b) Temporary buildings (e.g., storage sheds, shops, offices) and utilities may be erected by the Contractor only with the approval of the Contracting Officer and shall be built with labor and materials furnished by the Contractor without expense to the Government. The temporary buildings and utilities shall remain the property of the Contractor and shall be removed by the Contractor at its expense upon completion of the work. With the written consent of the Contracting Officer, the buildings and utilities may be abandoned and need not be removed.

(c) The Contractor shall, under regulations prescribed by the Contracting Officer, use only established roadways, or use temporary roadways constructed by the Contractor when and as authorized by the Contracting Officer. When materials are transported in prosecuting the work, vehicles shall not be loaded beyond the loading capacity recommended by the manufacturer of the vehicle or prescribed by any Federal, State, or local law or regulation. When it is necessary to cross curbs or sidewalks, the Contractor shall protect them from damage. The Contractor shall repair or pay for the repair of any damaged curbs, sidewalks, or roads.

(End of clause)

88. USE AND POSSESSION PRIOR TO COMPLETION (APR 1984) FAR 52.236-11

(a) The Government shall have the right to take possession of or use any completed or partially completed part of the work. Before taking possession of or using any work, the Contracting Officer shall furnish the Contractor a list of items of work remaining to be performed or corrected on those portions of the work that the Government intends to take possession of or use. However, failure of the Contracting Officer to list any item of work shall not relieve the Contractor of responsibility for complying with the terms of the contract. The Government's possession or use shall not be deemed an acceptance of any work under the contract.

(b) While the Government has such possession or use, the Contractor shall be relieved of the responsibility for the loss of or damage to the work resulting from the Government's possession or use, notwithstanding the terms of the clause in this contract entitled "Permits and Responsibilities." If prior possession or use by the Government delays the progress of the work or causes additional expense to the Contractor, an equitable adjustment shall be made in the contract price or the time of completion, and the contract shall be modified in writing accordingly.

(End of clause)

89. CLEANING UP (APR 1984) FAR 52.236-12

The Contractor shall at all times keep the work area, including storage areas, free from accumulations of waste materials. Before completing the work, the Contractor shall remove from the work and premises any rubbish, tools, scaffolding, equipment, and materials that are not the property of the Government. Upon completing the work, the Contractor shall leave the work area in a clean, neat, and orderly condition satisfactory to the Contracting Officer.

(End of clause)

90. ACCIDENT PREVENTION (NOV 1991)--ALTERNATE I (NOV 1991) FAR 52.236-13 I

(a) The Contractor shall provide and maintain work environments and procedures which will (1) safeguard the public and Government personnel, property, materials, supplies, and equipment exposed to Contractor operations and activities; (2) avoid interruptions of Government operations and delays in project completion dates; and (3) control costs in the performance of this contract.

(b) For these purposes on contracts for construction or dismantling, demolition, or removal of improvements, the Contractor shall--

(1) Provide appropriate safety barricades, signs, and signal lights;

(2) Comply with the standards issued by the Secretary of Labor at 29 CFR Part 1926 and 29 CFR Part 1910; and

(3) Ensure that any additional measures the Contracting Officer determines to be reasonably necessary for the purposes are taken.

(c) If this contract is for construction or dismantling, demolition or removal of improvements with any Department of Defense agency or component, the Contractor shall comply with all pertinent provisions of the latest version of U.S. Army Corps of Engineers Safety and Health Requirements Manual, EM 385-1-1, in effect on the date of the solicitation.

(d) Whenever the Contracting Officer becomes aware of any noncompliance with these requirements or any condition which poses a serious or imminent danger to the health or safety of the public or Government personnel, the Contracting Officer shall notify the Contractor orally, with written confirmation, and request immediate initiation of corrective action. This notice, when delivered to the Contractor or the Contractor's representative at the work site, shall be deemed sufficient

notice of the noncompliance and that corrective action is required. After receiving the notice, the Contractor shall immediately take corrective action. If the Contractor fails or refuses to promptly take corrective action, the Contracting Officer may issue an order stopping all or part of the work until satisfactory corrective action has been taken. The Contractor shall not be entitled to any equitable adjustment of the contract price or extension of the performance schedule on any stop work order issued under this clause.

(e) The Contractor shall insert this clause, including this paragraph (e), with appropriate changes in the designation of the parties, in subcontracts.

(f) Before commencing the work, the Contractor shall--

(1) Submit a written proposed plan for implementing this clause. The plan shall include an analysis of the significant hazards to life, limb, and property inherent in contract work performance and a plan for controlling these hazards; and

(2) Meet with representatives of the Contracting Officer to discuss and develop a mutual understanding relative to administration of the overall safety program.

(End of clause)

91. SCHEDULES FOR CONSTRUCTION CONTRACTS (APR 1984) FAR 52.236-15

(a) The Contractor shall, within five days after the work commences on the contract or another period of time determined by the Contracting Officer, prepare and submit to the Contracting Officer for approval three copies of a practicable schedule showing the order in which the Contractor proposes to perform the work, and the dates on which the Contractor contemplates starting and completing the several salient features of the work (including acquiring materials, plant, and equipment). The schedule shall be in the form of a progress chart of suitable scale to indicate appropriately the percentage of work scheduled for completion by any given date during the period. If the Contractor fails to submit a schedule within the time prescribed, the Contracting Officer may withhold approval of progress payment until the Contractor submits the required schedule.

(b) The Contractor shall enter the actual progress on the chart as directed by the Contracting Officer, and upon doing so shall immediately delivery three copies of the annotated schedule to the Contracting Officer. If, in the opinion of the Contracting Officer, the Contractor falls behind the approved schedule, the Contractor shall take steps necessary to improve its progress, including those that may be required by the Contracting Officer, without additional cost to the Government. In this circumstance, the Contracting Officer may require the Contractor to increase the number of shifts, overtime operations, days of work, and/or the amount of construction plant, and to submit for approval any supplementary schedule or schedules in chart form as the Contracting Officer deems necessary to demonstrate how the approved rate of progress will be regained.

(c) Failure of the Contractor to comply with the requirements of the Contracting Officer under this clause shall be grounds for a determination by the Contracting Officer that the Contractor is not prosecuting the work with sufficient diligence to ensure completion within the time specified in the contract. Upon making this determination, the Contracting Officer may terminate the Contractor's right to proceed with the work, or any separable part of it, in accordance with the default terms of this contract.

(End of clause)

92. SPECIFICATIONS AND DRAWINGS FOR CONSTRUCTION (FEB 1997)
FAR 52.236-21

(a) The Contractor shall keep on the work site a copy of the drawings and specifications and shall at all times give the Contracting Officer access thereto. Anything mentioned in the specifications and not shown on the drawings, or shown on the drawings and not mentioned in the specifications, shall be of like effect as if shown or mentioned in both. In case of difference between drawings and specifications, the specifications shall govern. In case of discrepancy in the figures, in the drawings, or in the specifications, the matter shall be promptly submitted to the Contracting Officer, who shall promptly make a determination in writing. Any adjustment by the Contractor without such a determination shall be at its own risk and expense. The Contracting Officer shall furnish from time to time such detailed drawings and other information as considered necessary, unless otherwise provided.

(b) Wherever in the specifications or upon the drawings the words "directed", "required", "ordered", "designated", "prescribed", or words of like import are used, it shall be understood that the "direction", "requirement", "order", "designation", or "prescription", of the Contracting Officer is intended and similarly the words "approved", "acceptable", "satisfactory", or words of like import shall mean "approved by," or "acceptable to", or "satisfactory to" the Contracting Officer, unless otherwise expressly stated.

(c) Where “as shown”, “as indicated”, “as detailed”, or words of similar import are used, it shall be understood that reference is made to the drawings accompanying this contract unless stated otherwise. The word “provided” as used herein shall be understood to mean “provide complete in place”, that is furnished and installed”.

(d) Shop drawings means drawings, submitted to the Government by the Contractor, subcontractor, or any lower tier subcontractor pursuant to a construction contract, showing in detail (1) the proposed fabrication and assembly of structural elements and (2) the installation (i.e., fit, and attachment details) of materials or equipment. It includes drawings, diagrams, layouts, schematics, descriptive literature, illustrations, schedules, performance and test data, and similar materials furnished by the contractor to explain in detail specific portions of the work required by the contract. The Government may duplicate, use, and disclose in any manner and for any purpose shop drawings delivered under this contract.

(e) If this contract requires shop drawings, the Contractor shall coordinate all such drawings, and review them for accuracy, completeness, and compliance with contract requirements and shall indicate its approval thereon as evidence of such coordination and review. Shop drawings submitted to the Contracting Officer without evidence of the Contractor’s approval may be returned for resubmission. The Contracting Officer will indicate an approval or disapproval of the shop drawings and if not approved as submitted shall indicate the Government’s reasons therefor. Any work done before such approval shall be at the Contractor’s risk. Approval by the Contracting Officer shall not relieve the Contractor from responsibility for any errors or omissions in such drawings, nor from responsibility for complying with the requirements of this contract, except with respect to variations described and approved in accordance with (f) below.

(f) If shop drawings show variations from the contract requirements, the Contractor shall describe such variations in writing, separate from the drawings, at the time of submission. If the Contracting Officer approves any such variation, the Contracting Officer shall issue an appropriate contract modification, except that, if the variation is minor or does not involve a change in price or in time of performance, a modification need not be issued.

(g) The Contractor shall submit to the Contracting Officer for approval four copies (unless otherwise indicated) of all shop drawings as called for under the various headings of these specifications. Three sets (unless otherwise indicated) of all shop drawings, will be retained by the Contracting Officer and one set will be returned to the Contractor.

(End of clause)

93. PRECONSTRUCTION CONFERENCE (FEB 1995) FAR 52.236-26

If the Contracting Officer decides to conduct a preconstruction conference, the successful offeror will be notified and will be required to attend. The Contracting Officer’s notification will include specific details regarding the date, time, and location of the conference, any need for attendance by subcontractors, and information regarding the items to be discussed.

(End of clause)

94. MODIFICATION PROPOSALS--PRICE BREAKDOWN (DEC 1991)
DFARS 252.236-7000

(a) The Contractor shall furnish a price breakdown, itemized as required and within the time specified by the Contracting Officer, with any proposal for a contract modification.

(b) The price breakdown--

(1) Must include sufficient detail to permit analysis of profit, and of all costs for--

(i) Material;

(ii) Labor;

(iii) Equipment;

(iv) Subcontracts; and

(v) Overhead; and

(2) Must cover all work involved in the modification, whether the work was deleted, added, or changed.

(c) The Contractor shall provide similar price breakdowns to support any amounts claimed for subcontracts.

(d) The Contractor’s proposal shall include a justification for any time extension proposed.

(End of clause)

95. BANKRUPTCY (JUL 1995) FAR 52.242-13

In the event the Contractor enters into proceedings relating to bankruptcy, whether voluntary or involuntary, the Contractor agrees to furnish, by certified mail or electronic commerce method authorized by the contract, written notification of the bankruptcy to the Contracting Officer responsible for administering the contract. This notification shall

be furnished within five days of the initiation of the proceedings relating to bankruptcy filing. This notification shall include the date on which the bankruptcy petition was filed, the identity of the court in which the bankruptcy petition was filed, and a listing of Government contract numbers and contracting offices for all Government contracts against which final payment has not been made. This obligation remains in effect until final payment under this contract.

(End of clause)

96. SUSPENSION OF WORK (APR 1984) FAR 52.242-14

(a) The Contracting Officer may order the Contractor, in writing, to suspend, delay, or interrupt all or any part of the work of this contract for the period of time that the Contracting Officer determines appropriate for the convenience of the Government.

(b) If the performance of all or any part of the work is, for an unreasonable period of time, suspended, delayed, or interrupted (1) by an act of the Contracting Officer in the administration of this contract, or (2) by the Contracting Officer's failure to act within the time specified in this contract (or within a reasonable time if not specified), an adjustment shall be made for any increase in the cost of performance of this contract (excluding profit) necessarily caused by the unreasonable suspension, delay, or interruption, and the contract modified in writing accordingly. However, no adjustment shall be made under this clause for any suspension, delay, or interruption to the extent that performance would have been so suspended, delayed, or interrupted by any other cause, including the fault or negligence of the Contractor, or for which an equitable adjustment is provided for or excluded under any other term or condition of this contract.

(c) A claim under this clause shall not be allowed (1) for any costs incurred more than 20 days before the Contractor shall have notified the Contracting Officer in writing of the act or failure to act involved (but this requirement shall not apply as to a claim resulting from a suspension order), and (2) unless the claim, in an amount stated, is asserted in writing as soon as practicable after the termination of the suspension, delay, or interruption, but not later than the date of final payment under the contract.

(End of clause)

97. POSTAWARD CONFERENCE (DEC 1991) DFARS 252.242-7000

The Contractor agrees to attend any postaward conference convened by the contracting activity or contract administration office in accordance with Federal Acquisition Regulation Subpart 42.5.

(End of clause)

98. CHANGES (AUG 1987) FAR 52.243-4

(a) The Contracting Officer may, at any time, without notice to the sureties, if any, by written order designated or indicated to be a change order, make changes in the work within the general scope of the contract, including changes--

(1) In the specifications (including drawings and designs);
(2) In the method or manner or performance of the work;
(3) In the Government-furnished facilities, equipment, materials, services, or site; or
(4) Directing acceleration in the performance of the work.

(b) Any other written or oral order (which, as used in this paragraph (b), includes direction, instruction, interpretation, or determination) from the Contracting Officer that causes a change shall be treated as a change order under this clause; *provided*, that the Contractor gives the Contracting Officer written notice stating (1) the date, circumstances, and source of the order and (2) that the Contractor regards the order as a change order.

(c) Except as provided in this clause, no order, statement, or conduct of the Contracting Officer shall be treated as a change under this clause or entitle the Contractor to an equitable adjustment.

(d) If any change under this clause causes an increase or decrease in the Contractor's cost of, or the time required for, the performance of any part of the work under this contract, whether or not changed by any such order, the Contracting Officer shall make an equitable adjustment and modify the contract in writing. However, except for an adjustment based on defective specifications, no adjustment for any change under paragraph (b) of this clause shall be made for any costs incurred more than 20 days before the Contractor gives written notice as required. In the case of defective specifications for which the Government is responsible, the equitable adjustment shall include any increased cost reasonably incurred by the Contractor in attempting to comply with the defective specifications.

(e) The Contractor must assert its right to an adjustment under this clause within 30 days after (1) receipt of a written change order under paragraph (a) of this clause or (2) the furnishing of a written notice under paragraph (b) of this clause, by submitting to the Contracting Officer a written statement describing the general nature and amount of proposal, unless

this period is extended by the Government. The statement of proposal for adjustment may be included in the notice under paragraph (b) above.

(f) No proposal by the Contractor for an equitable adjustment shall be allowed if asserted after final payment under this contract.

(End of clause)

99. PRICING OF CONTRACT MODIFICATIONS (DEC 1991) DFARS 252.243-7001

When costs are a factor in any price adjustment under this contract, the contract cost principles and procedures in FAR Part 31 and DFARS Part 231, in effect on the date of this contract, apply.

(End of clause)

100. REQUESTS FOR EQUITABLE ADJUSTMENT (MAR 1998) DFARS 252.243-7002

(a) The amount of any request for equitable adjustment to contract terms shall accurately reflect the contract adjustment for which the Contractor believes the Government is liable. The request shall include only costs for performing the change, and shall not include any costs that already have been reimbursed or that have been separately claimed. All indirect costs included in the request shall be properly allocable to the change in accordance with applicable acquisition regulations.

(b) In accordance with 10 U.S.C. 2410(a), any request for equitable adjustment to contract terms that exceeds the simplified acquisition threshold shall bear, at the time of submission, the following certificate executed by an individual authorized to certify the request on behalf of the Contractor:

> I certify that the request is made in good faith, and that the supporting data are accurate and complete to the best of my knowledge and belief.
>
> _____
> (Official's Name)
>
> _____
> (Title)

(c) The certification in paragraph (b) of this clause requires full disclosure of all relevant facts, including—

(1) Cost or pricing data if required in accordance with subsection 15.403-4 of the Federal Acquisition Regulation (FAR); and

(2) Information other than cost or pricing data, in accordance with subsection 15.403-3 of the FAR, including actual cost data and data to support any estimated costs, even if cost or pricing data are not required.

(d) The certification requirement in paragraph (b) of this clause does not apply to—

(1) Requests for routine contract payments; for example, requests for payment for accepted supplies and services, routine vouchers under a cost-reimbursement type contract, or progress payment invoices; or

(2) Final adjustments under an incentive provision of the contract.

(End of clause)

101. GOVERNMENT PROPERTY (FIXED-PRICE CONTRACTS) (DEC 1989) FAR 52.245-2

NOTE: This clause applies only when the acquisition cost of all Government-furnished property to be involved in the contract is more than $100,000.

(a) *Government-furnished property*. (1) The Government shall deliver to the Contractor, for use in connection with and under the terms of this contract, the Government-furnished property described in the Schedule or specifications

together with any related data and information that the Contractor may request and is reasonably required for the intended use of the property (hereinafter referred to as "Government-furnished property").

(2) The delivery or performance dates for this contract are based upon the expectation that Government-furnished property suitable for use (except for property furnished "as is") will be delivered to the Contractor at the times stated in the Schedule or, if not so stated, in sufficient time to enable the Contractor to meet the contract's delivery or performance dates.

(3) If Government-furnished property is received by the Contractor in a condition not suitable for the intended use, the Contractor shall, upon receipt of it, notify the Contracting Officer, detailing the facts, and, as directed by the Contracting Officer and at Government expense, either repair, modify, return, or otherwise dispose of the property. After completing the directed action and upon written request of the Contractor, the Contracting Officer shall make an equitable adjustment as provided in paragraph (h) of this clause.

(4) If Government-furnished property is not delivered to the Contractor by the required time, the Contracting Officer shall, upon the Contractor's timely written request, make a determination of the delay, if any, caused the Contractor and shall make an equitable adjustment in accordance with paragraph (h) of this clause.

(b) *Changes in Government-furnished property*. (1) The Contracting Officer may, by written notice, (i) decrease the Government-furnished property provided or to be provided under this contract, or (ii) substitute other Government-furnished property for the property to be provided by the Government, or to be acquired by the Contractor for the Government, under this contract. The Contractor shall promptly take such action as the Contracting Officer may direct regarding the removal, shipment, or disposal of the property covered by such notice.

(2) Upon the Contractor's written request, the Contracting Officer shall make an equitable adjustment to the contract in accordance with paragraph (h) of this clause, if the Government has agreed in the Schedule to make the property available for performing this contract and there is any--

(i) Decrease or substitution in this property pursuant to subparagraph (b)(1) above; or

(ii) Withdrawal of authority to use this property, if provided under any other contract or lease.

(c) *Title in Government property*. (1) The Government shall retain title to all Government-furnished property.

(2) All Government-furnished property and all property acquired by the Contractor, title to which vests in the Government under this paragraph (collectively referred to as "Government property"), are subject to the provisions of this clause. However, special tooling accountable to this contract is subject to the provisions of the Special Tooling clause and is not subject to the provisions of this clause. Title to Government property shall not be affected by its incorporation into or attachment to any property not owned by the Government, nor shall Government property become a fixture or lose its identity as personal property by being attached to any real property.

(3) Title to each item of facilities and special test equipment acquired by the Contractor for the Government under this contract shall pass to and vest in the Government when its use in performing this contract commences or when the Government has paid for it, whichever is earlier, whether or not title previously vested in the Government.

(4) If this contract contains a provision directing the Contractor to purchase material for which the Government will reimburse the Contractor as a direct item of cost under this contract--

(i) Title to material purchased from a vendor shall pass to and vest in the Government upon the vendor's delivery of such material; and

(ii) Title to all other material shall pass to and vest in the Government upon--

(A) Issuance of the material for use in contract performance;

(B) Commencement of processing of the material or its use in contract performance; or

(C) Reimbursement of the cost of the material by the Government, whichever occurs first.

(d) *Use of Government property*. The Government property shall be used only for performing this contract, unless otherwise provided in the contract or approved by the Contracting Officer.

(e) *Property administration*. (1) The Contractor shall be responsible and accountable for all Government property provided under this contract and shall comply with Federal Acquisition Regulation (FAR) Subpart 45.5, as in effect on the date of this contract.

(2) The Contractor shall establish and maintain a program for the use, maintenance, repair, protection, and preservation of Government property in accordance with sound industrial practice and the applicable provisions of Subpart 45.5 of the FAR.

(3) If damage occurs to Government property, the risk of which has been assumed by the Government under this contract, the Government shall replace the items or the Contractor shall make such repairs as the Government directs. However, if the Contractor cannot effect such repairs with the time required, the Contractor shall dispose of the property as directed by the Contracting Officer. When any property for which the Government is responsible is replaced or repaired, the Contracting Officer shall make an equitable adjustment in accordance with paragraph (h) of this clause.

(4) The Contractor represents that the contract price does not include any amount for repairs or replacement for which the Government is responsible. Repairs or replacement of property for which the Contractor is responsible shall be accomplished by the Contractor at its own expense.

(f) *Access*. The Government and all its designees shall have access at all reasonable times to the premises in which any Government property is located for the purpose of inspecting the Government property.

(g) *Risk of loss*. Unless otherwise provided in this contract, the Contractor assumes the risk of, and shall be responsible for, any loss or destruction of, or damage to, Government property upon its delivery to the Contractor or upon passage of title to the Government under paragraph (c) of this clause. However, the Contractor is not responsible for reasonable wear and tear to Government property or for Government property properly consumed in performing this contract.

(h) *Equitable adjustment*. When this clause specifies an equitable adjustment, it shall be made to any affected contract provision in accordance with the procedures of the Changes clause. When appropriate, the Contracting Officer may initiate an equitable adjustment in favor of the Government. The right to an equitable adjustment shall be the Contractor's exclusive remedy. The Government shall not be liable to suite for breach of contract for--

(1) Any delay in delivery of Government-furnished property;

(2) Delivery of Government-furnished property in a condition not suitable for its intended use;

(3) A decrease in or substitution of Government-furnished property; or

(4) Failure to repair or replace Government property for which the Government is responsible.

(i) *Final accounting and disposition of Government property* Upon completing this contract, or at such earlier dates as may be fixed by the Contracting Officer, the Contractor shall submit, in a form acceptable to the Contracting Officer, inventory schedules covering all items of Government property (including any resulting scrap) not consumed in performing this contract or delivered to the Government. The Contractor shall prepare for shipment, delivery f.o.b. origin, or dispose of the Government property as may be directed or authorized by the Contracting Officer. The net proceeds of any such disposal shall be credited to the contract price or shall be paid to the Government as the Contracting Officer directs.

(j) *Abandonment and restoration of Contractor's premises*. Unless otherwise provided herein, the Government--

(1) May abandon any Government property in place, at which time all obligations of the Government regarding such abandoned property shall cease; and

(2) Has no obligation to restore or rehabilitate the Contractor's premises under any circumstances (e.g., abandonment, disposition upon completion of need, or upon contract completion). However, if the Government-furnished property (listed in the Schedule or specifications) is withdrawn or is unsuitable for the intended use, or if other Government property is substituted, then the equitable adjustment under paragraph (h) of this clause may properly include restoration or rehabilitation costs.

(k) *Communications*. All communications under this clause shall be in writing.

(l) *Overseas contracts*. If this contract is to be performed outside of the United States of America, its territories, or possessions, the words "Government" and "Government-furnished" (wherever they appear in this clause) shall be construed as "United States Government" and "United States Government-furnished," respectively.

(End of clause)

102. GOVERNMENT-FURNISHED PROPERTY (SHORT FORM) (APR 1984) FAR 52.245-4

NOTE: This clause applies only when the acquisition cost of all Government-furnished property to be involved in the contract is $100,000 or less.

(a) The Government shall delivery to the Contractor, at the time and locations stated in this contract, the Government-furnished property described in the Schedule or specifications. If that property, suitable for its intended used, is not delivered to the Contractor, the Contracting Officer shall equitably adjust affected provisions of this contract in accordance with the Changes clause when--

(1) The Contractor submits a timely written request for an equitable adjustment; and

(2) The facts warrant an equitable adjustment.

(b) Title to Government-furnished property shall remain in the Government. The Contractor shall use the Government-furnished property only in connection with this contract. The Contractor shall maintain adequate property control records in accordance with sound industrial practice and will make such records available for Government inspection at all reasonable times, unless the clause at Federal Acquisition Regulation 52.245-1, Property Records, is included in this contract.

(c) Upon delivery of Government-furnished property to the Contractor, the Contractor assumes, the risk and responsibility for its loss or damage, except--

(1) For reasonable wear and tear;
(2) To the extent property is consumed in performing this contract; or
(3) As otherwise provided for by the provisions of this contract.

(d) Upon completing this contract, the Contractor shall follow the instructions of the Contracting Officer regarding the disposition of all Government-furnished property not consumed in performing this contract or previously delivered to the Government. The Contractor shall prepare for shipment, delivery f.o.b. origin, or dispose of the Government property, as may be directed or authorized by the Contracting Officer. The net proceeds of any such disposal shall be credited to the contract price or shall be paid to the Government as directed by the Contracting Officer.

(e) If this contract is to be performed outside the United States of America, its territories, or possessions, the words "Government" and "Government-furnished" (wherever they appear in this clause) shall be construed as "United States Government" and "United States Government-furnished," respectively.

(End of clause)

103. REPORTS OF GOVERNMENT PROPERTY (MAY 1994) DFARS 252.245-7001

(a) The Contractor shall provide an annual report--
(1) For all DoD property for which the Contractor is accountable under the contract;
(2) Prepared in accordance with the requirements of DD Form 1662, DoD Property in the Custody of Contractors, or approved substitute, including instructions on the reverse side of the form;
(3) In duplicate, to the cognizant Government property administrator, no later than October 31.

(b) The Contractor is responsible for reporting all Government property accountable to this contract, including that at subcontractor and alternate locations.

(End of clause)

104. INSPECTION OF CONSTRUCTION (AUG 1996) FAR 52.246-12

(a) *Definition*. "Work" includes, but is not limited to, materials, workmanship, and manufacture and fabrication of components.

(b) The Contractor shall maintain an adequate inspection system and perform such inspections as will ensure that the work performed under the contract conforms to contract requirements. The Contractor shall maintain complete inspection records and make them available to the Government. All work shall be conducted under the general direction of the Contracting Officer and is subject to Government inspection and test at all places and at all reasonable times before acceptance to ensure strict compliance with the terms of the contract.

(c) Government inspections and tests are for the sole benefit of the Government and do not--
(1) Relieve the Contractor of responsibility for providing adequate quality control measures;
(2) Relieve the Contractor of responsibility for damage to or loss of the material before acceptance;
(3) Constitute or imply acceptance; or
(4) Affect the continuing rights of the Government after acceptance of the complete work under paragraph (i) below.

(d) The presence or absence of a Government inspector does not relieve the Contractor from any contract requirement, nor is the inspector authorized to change any term or condition of the specification without the Contracting Officer's written authorization.

(e) The Contractor shall promptly furnish, at no increase in contract price, all facilities, labor, and material reasonably needed for performing such safe and convenient inspections and tests as may be required by the Contracting Officer. The Government may charge to the Contractor any additional cost of inspection or test when work is not ready at the time specified by the Contractor for inspection or test, or when prior rejection makes reinspection or retest necessary. The Government shall perform all inspections and tests in a manner that will not unnecessarily delay the work. Special, full size, and performance tests shall be performed as described in the contract.

(f) The Contractor shall, without charge, replace or correct work found by the Government not to conform to contract requirements, unless in the public interest the Government consents to accept the work with an appropriate adjustment in contract price. The Contractor shall promptly segregate and remove rejected material from the premises.

(g) If the Contractor does not promptly replace or correct rejected work, the Government may (1) by contract or otherwise, replace or correct the work and charge the cost to the Contractor or (2) terminate for default the Contractor's right to proceed.

(h) If, before acceptance of the entire work, the Government decides to examine already completed work by removing it or tearing it out, the Contractor, on request, shall promptly furnish all necessary facilities, labor, and material. If the

work is found to be defective or nonconforming in any material respect due to the fault of the Contractor or its subcontractors, the Contractor shall defray the expenses of the examination and of satisfactory reconstruction. However, if the work is found to meet contract requirements, the Contracting Officer shall make an equitable adjustment for the additional services involved in the examination and reconstruction, including, if completion of the work was thereby delayed, an extension of time.

(i) Unless otherwise specified in the contract, the Government shall accept, as promptly as practicable after completion and inspection, all work required by the contract or that portion of the work the Contracting Officer determines can be accepted separately. Acceptance shall be final and conclusive except for latent defects, fraud, gross mistakes amounting to fraud, or the Government's rights under any warranty or guarantee.

(End of clause)

105. VALUE ENGINEERING--CONSTRUCTION (MAR 1989)--ALTERNATE I (APR 1984)
FAR 52.248-3 I

(a) *General*. The Contractor is encouraged to develop, prepare, and submit value engineering change proposals (VECP's) voluntarily. The Contractor shall share in any instant contract savings realized from accepted VECP's, in accordance with paragraph (f) below.

(b) *Definitions*. "Collateral costs," as used in this clause, means agency costs of operation, maintenance, logistic support, or Government-furnished property.

"Collateral savings," as used in this clause, means those measurable net reductions resulting from a VECP in the agency's overall projected collateral costs, exclusive of acquisition savings, whether or not the acquisition cost changes.

"Contractor's development and implementation costs," as used in this clause, means those costs the Contractor incurs on a VECP specifically in developing, testing, preparing, and submitting the VECP, as well as those costs the Contractor incurs to make the contractual changes required by Government acceptance of a VECP.

"Government costs," as used in this clause means those agency costs that result directly from developing and implementing the VECP, such as any net increases in the cost of testing, operations, maintenance, and logistic support. The term does not include the normal administrative costs of processing the VECP.

"Instant contract savings," as used in this clause, means the estimated reduction in Contractor cost of performance resulting from acceptance of the VECP, minus allowable Contractor's development and implementation costs, including subcontractors' development and implementation costs (see paragraph (h) below).

"Value engineering change proposal (VECP): means a proposal that--

(1) Requires a change to this, the instant contract, to implement; and

(2) Results in reducing the contract price or estimated cost without impairing essential functions or characteristics; *provided*, that it does not involve a change--

(i) In deliverable end item quantities only; or

(ii) To the contract type only.

(c) VECP preparation. As a minimum, the Contractor shall include in each VECP the information described in subparagraphs (1) through (7) below. If the proposed change is affected by contractually required configuration management or similar procedures, the instructions in those procedures relating to format, identification, and priority assignment shall govern VECP preparation. The VECP shall include the following:

(1) A description of the difference between the existing contract requirement and that proposed, the comparative advantages and disadvantages of each, a justification when an item's function or characteristics are being altered, and the effect of the change on the end item's performance.

(2) A list and analysis of the contract requirements that must be changed if the VECP is accepted, including any suggested specification revisions.

(3) A separate, detailed cost estimate for (i) the affected portions of the existing contract requirement and (ii) the VECP. The cost reduction associated with the VECP shall take into account the Contractor's allowable development and implementation costs, including any amount attributable to subcontracts under paragraph (h) below.

(4) A description and estimate of costs the Government may incur in implementing the VECP, such as test and evaluation and operating and support costs.

(5) A predicting of any effects the proposed change would have on collateral costs to the agency.

(6) A statement of the time by which a contract modification accepting the VECP must be issued in order to achieve the maximum cost reduction, noting any effect on the contract completion time or delivery schedule.

(7) Identification of any previous submissions of the VECP, including the dates submitted, the agencies and contract numbers involved, and previous Government actions, if known.

(d) *Submission*. The Contractor shall submit VECP's to the Resident Engineer at the worksite, with a copy to the Contracting Officer.

(e) *Government action*. (1) The Contracting Officer shall notify the Contractor of the status of the VECP within 45 calendar days after the contracting office receives it. If additional time is required, the Contracting Officer shall notify the Contractor within the 45-day period and provide the reason for the delay and the expected date of the decisions. The Government will process VECP's expeditiously; however, it shall not be liable for any delay in acting upon a VECP.

(2) If the VECP is not accepted, the Contracting Officer shall notify the Contractor in writing, explaining the reasons for rejection. The Contractor may withdraw any VECP, in whole or in part, at any time before it is accepted by the Government. The Contracting Officer may require that the Contractor provide written notification before undertaking significant expenditures for VECP effort.

(3) Any VECP may be accepted, in whole or in part, by the Contracting Officer's award of a modification to this contract citing this clause. The Contracting Officer may accept the VECP, even though an agreement on price reduction has not been reached, by issuing the Contractor a notice to proceed with the change. Until a notice to proceed is issued or a contract modification applies a VECP to this contract, the Contractor shall perform in accordance with the existing contract. The Contracting Officer's decision to accept or reject all or part of any VECP shall be final and not subject to the Disputes clause or otherwise subject to litigation under the Contract Disputes Act of 1978 (41 U.S.C. 601-613).

(f) *Sharing*. (1) *Rates*. The Government's share of savings is determined by subtracting Government costs from instant contract savings and multiplying the result by (i) 45 percent for fixed-price contracts or (ii) 75 percent for cost-reimbursement contracts.

(2) *Payment*. Payment of any share due the Contractor for use of a VECP on this contract shall be authorized by a modification to this contract to--

(i) Accept the VECP;

(ii) Reduce the contract price or estimated cost by the amount of instant contract savings; and

(iii) Provide the Contractor's share of savings by adding the amount calculated to the contract price or fee.

(g) *Subcontracts*. The Contractor shall include an appropriate value engineering clause in any subcontract of $50,000 or more an may include one in subcontracts of lesser value. In computing any adjustment in this contract's price under paragraph (f) above, the Contractor's allowable development and implementation costs shall include any subcontractor's allowable development and implementation costs clearly resulting from a VECP accepted by the Government under this contract, but shall exclude any value engineering incentive payments to a subcontractor. The Contractor may choose any arrangement for subcontractor value engineering incentive payments; *provided*, that these payments shall not reduce the Government's share of the savings resulting from the VECP.

(h) *Data*. The Contractor may restrict the Government's right to use any part of a VECP or the supporting data by marking the following legend on the affected parts:

> "These data, furnished under the Value Engineering--Construction clause of contract _____, shall not be disclosed outside the Government or duplicated, used, or disclosed, in whole or in part, for any purpose other than to evaluate a value engineering change proposal submitted under the clause. This restriction does not limit the Government's right to use information contained in these data if it has been obtained or is otherwise available from the Contractor or from another source without limitations."

If a VECP is accepted, the Contractor hereby grants the Government unlimited rights in the VECP and supporting data, except that, with respect to data qualifying and submitted as limited rights technical data, the Government shall have the rights specified in the contract modification implementing the VECP and shall appropriately mark the data. (The terms "unlimited rights" and "limited rights" are defined in Part 27 of the Federal Acquisition Regulation.)

(End of clause)

106. TERMINATION FOR CONVENIENCE OF THE GOVERNMENT (FIXED-PRICE) (SEP 1996)--ALTERNATE I (SEP 1996) FAR 52.249-2 I

(a) The Government may terminate performance of the work under this contract in whole or in part if the Contracting Officer determines that a termination is in the Government's interest. The Contracting Officer shall terminate by delivering to the Contractor a Notice of Termination specifying the extent of termination and the effective date.

(b) After receipt of a Notice of Termination and except as directed by the Contracting Officer, the Contractor shall immediately proceed with the following obligations, regardless of any delay in determining or adjusting any amounts due under this clause:

(1) Stop work as specified in the notice.

(2) Place no further subcontracts or orders (referred to as subcontracts in this clause) for materials, services, or facilities, except as necessary to complete the continued portion of the contract.

(3) Terminate all subcontracts to the extent they relate to the work terminated.

(4) Assign to the Government, as directed by the Contracting Officer, all right, title, and interest of the Contractor under the subcontracts terminated, in which case the Government shall have the right to settle or to pay any termination settlement proposal arising out of those terminations.

(5) With approval or ratification to the extent required by the Contracting Officer, settle all outstanding liabilities and termination settlement proposals arising from the termination settlement proposals arising from the termination of subcontracts; the approval or ratification will be final for purposes of this clause.

(6) As directed by the Contracting Officer, transfer title and delivery to the Government (i) the fabricated or unfabricated parts, work in process, completed work, supplies, and other material produced or acquired for the work terminated, and (ii) the completed or partially completed plans, drawings, information, and other property that, if the contract had been completed, would be required to be furnished to the Government.

(7) Complete performance of the work not terminated.

(8) Take any action that may be necessary, or that the Contracting Officer may direct, for the protection and preservation of the property related to this contract that is in the possession of the Contractor and in which the Government has or may acquire an interest.

(9) Use its best efforts to sell, as directed or authorized by the Contracting Officer, any property of the types referred to in subparagraph (b)(6) of this clause; *provided*, however, that the Contractor (i) is not required to extend credit to any purchaser and (ii) may acquire the property under the conditions prescribed by, and at prices approved by, the Contracting Officer. The proceeds of any transfer or disposition will be applied to reduce any payments to be made by the Government under this contract, credited to the price or cost of the work, or paid in any other manner directed by the Contracting Officer.

(c) The Contractor shall submit complete termination inventory schedules no later than 120 days from the effective date of termination, unless extended in writing by the Contracting Officer upon written request of the Contractor within this 120-day period.

(d) After expiration of the plant clearance period as defined in Subpart 45.6 of the Federal Acquisition Regulation, the Contractor may submit to the Contracting Officer a list, certified as to quantity and quality, of termination inventory not previously disposed of, excluding items authorized for disposition by the Contracting Officer. The Contractor may request the Government to remove those items or enter into an agreement for their storage. Within 15 days, the Government will accept title to those items and remove them or enter into a storage agreement. The Contracting Officer may verify the list upon removal of the items, or if stored, within 45 days from submission of the list, and shall correct the list, as necessary, before final settlement.

(e) After termination, the Contractor shall submit a final termination settlement proposal to the Contracting Officer in the form and with the certification prescribed by the Contracting Officer. The Contractor shall submit the proposal promptly, but no later than 1 year from the effective date of termination, unless extended in writing by the Contracting Officer upon written request of the Contractor within this 1-year period. However, if the Contracting Officer determines that the facts justify it, a termination settlement proposal may be received and acted on after 1 year or any extension. If the Contractor fails to submit the proposal within the time allowed, the Contracting Officer may determine, on the basis of information available, the amount, if any due the Contractor because of the termination and shall pay the amount determined.

(f) Subject to paragraph (e) of this clause, the Contractor and the Contracting Officer may agree upon the whole or any part of the amount to be paid because of the termination. The amount may include a reasonable allowance for profit on work done. However, the agreed amount, whether under this paragraph (f) or paragraph (g) of this clause, exclusive of costs shown in subparagraph (g)(3) of this clause, may not exceed the total contract price as reduced by (1) the amount of payments previously made and (2) the contract price of work not terminated. The contract shall be modified, and the Contractor paid the agreed amount. Paragraph (g) of this clause shall not limit, restrict, or affect the amount that may be agreed upon to be paid under this paragraph.

(g) If the Contractor and the Contracting Officer fail to agree on the whole amount to be paid because of the termination of work, the Contracting Officer shall pay the Contractor the amounts determined as follows, but without duplication of any amounts agreed upon under paragraph (f) of this clause:

(1) For contract work performed before the effective date of termination, the total (without duplication of any items) of--

(i) The cost of this work;

(ii) The cost of settling and paying termination settlement proposals under terminated subcontracts that are properly chargeable to the terminated portion of the contract if not included in subdivision (g)(1)(i) of this clause; and

(iii) A sum, as profit on subdivision (g)(1)(i) of this clause, determined by the Contracting Officer under 49.202 of the Federal Acquisition Regulation, in effect on the date of this contract, to be fair and reasonable; however, if it appears that the Contractor would have sustained a loss on the entire contract had it been completed, the Contracting Officer shall allow no profit under this subdivision (iii) and shall reduce the settlement to reflect the indicated rate of loss.

(2) The reasonable costs of settlement of the work terminated, including--

(i) Accounting, legal, clerical, and other expenses reasonably necessary for the preparation of termination settlement proposals and supporting data;

(ii) The termination and settlement of subcontracts (excluding the amounts of such settlements); and

(iii) Storage, transportation, and other costs incurred, reasonably necessary for the preservation, protection, or disposition of the termination inventory.

(h) Except for normal spoilage, and except to the extent that the Government expressly assumed the risk of loss, the Contracting Officer shall exclude from the amounts payable to the Contractor under paragraph (g) of this clause, the fair value, as determined by the Contracting Officer, of property that is destroyed, lost, stolen, or damaged so as to become undeliverable to the Government or to a buyer.

(i) The cost principles and procedures of Part 31 of the Federal Acquisition Regulation, in effect on the date of this contract, shall govern all costs claimed, agreed to, or determined under this clause.

(j) The Contractor shall have the right of appeal, under the Disputes clause, from any determination made by the Contracting Officer under paragraph (e), (g), or (l) of this clause, except that if the Contractor failed to submit the termination settlement proposal or request for equitable adjustment within the time provided in paragraph (e) or (l), respectively, and failed to request a time extension, there is not right of appeal.

(k) In arriving at the amount due the Contractor under this clause, there shall be deducted--

(1) All unliquidated advance or other payments to the Contractor under the terminated portion of this contract;

(2) Any claim which the Government has against the Contractor under this contract; and

(3) The agreed price for, or the proceeds of sale of, materials, supplies, or other things acquired by the Contractor or sold under the provisions of this clause and not recovered by or credited to the Government.

(l) If the termination is partial, the Contractor may file a proposal with the Contracting Officer for an equitable adjustment of the price(s) of the continued portion of the contract. The Contracting Officer shall make any equitable adjustment agreed upon. Any proposal by the Contractor for an equitable adjustment under this clause shall be requested within 90 days from the effective date of termination unless extended in writing by the Contracting Officer.

(m)(1) The Government may, under the terms and conditions it prescribes, make partial payments and payments against costs incurred by the Contractor for the terminated portion of the contract, if the Contracting Officer believes the total of these payments will not exceed the amount to which the Contractor will be entitled.

(2) If the total payments exceed the amount finally determined to be due, the Contractor shall repay the excess to the Government upon demand, together with interest computed at the rate established by the Secretary of the Treasury under 50 U.S.C. App. 1215(b)(2). Interest shall be computed for the period from the date the excess payment is received by the Contractor to the date the excess is repaid. Interest shall not be charged on any excess payment due to a reduction in the Contractor's termination settlement proposal because of retention or other disposition of termination inventory until 10 days after the date of the retention or disposition, or a later date determined by the Contracting Officer because of the circumstances.

(n) Unless otherwise provided in this contract or by statute, the Contractor shall maintain all records and documents relating to the terminated portion of this contract for 3 years after final settlement. This includes all books and other evidence bearing on the Contractor's costs and expenses under this contract. The Contractor shall make these records and documents available to the Government, at the Contractor's office, at all reasonable times, without any direct charge. If approved by the Contracting Officer, photographs, microphotographs, or other authentic reproductions may be maintained instead of original records and documents.

(End of clause)

107. DEFAULT (FIXED-PRICE CONSTRUCTION) (APR 1984) FAR 52.249-10

(a) If the Contractor refuses or fails to prosecute the work or any separable part, with the diligence that will insure its completion within the time specified in this contract including any extension, or fails to complete the work within this time, the Government may, by written notice to the Contractor, terminate the right to proceed with the work (or the separable part of the work) that has been delayed. In this event, the government may take over the work and complete it by contract or otherwise, and may take possession of and use any materials, appliances, and plant on the work site necessary for completing the work. The Contractor and its sureties shall be liable for any damage to the Government resulting from the Contractor's refusal or failure to complete the work within the specified time, whether or not the Contractor's right to

proceed with the work is terminated. This liability includes any increased costs incurred by the Government in completing the work.

(b) The Contractor's right to proceed shall not be terminated nor the Contractor charged with damages under this clause, if--

(1) The delay in completing the work arises from unforeseeable causes beyond the control and without the fault or negligence of the Contractor. Examples of such causes include (i) acts of God or of the public enemy, (ii) acts of the Government in either its sovereign or contractual capacity, (iii) acts of another Contractor in the performance of a contract with the Government, (iv) fires, (v) floods, (vi) epidemics, (vii) quarantine restrictions, (viii) strikes, (ix) freight embargoes, (x) unusually severe weather, or (xi) delays of subcontractors or suppliers at any tier arising from unforeseeable causes beyond the control and without the fault or negligence of both the Contractor and the subcontractors or suppliers; and

(2) The Contractor, within 10 days from the beginning of any delay (unless extended by the Contracting Officer), notifies the Contracting Officer in writing of the causes of delay. The Contracting Officer shall ascertain the facts and the extent of delay. If, in the judgment of the Contracting Officer, the findings of fact warrant such action, the time for completing the work shall be extended. The findings of the Contracting Officer shall be final and conclusive on the parties, but subject to appeal under the Disputes clause.

(c) If, after termination of the Contractor's right to proceed, it is determined that the Contractor was not in default, or that the delay was excusable, the rights and obligations of the parties will be the same as if the termination had been issued for the convenience of the Government.

(d) The rights and remedies of the Government in this clause are in addition to any other rights and remedies provided by law or under this contract.

(End of clause)

108. COMPUTER GENERATED FORMS (JAN 1991) FAR 52.253-1

(a) Any data required to be submitted on a Standard or Optional Form prescribed by the Federal Acquisition Regulation (FAR) may be submitted on a computer generated version of the form, *provided* the form carries the Standard or Optional Form number and edition data.

(b) Unless prohibited by agency regulations, any data required to be submitted on an agency unique form prescribed by an agency supplement to the FAR may be submitted on a computer generated version of the form provided there is no change to the name, content, or sequence of the data elements on the form and provided the form carries the agency form number and edition data.

(c) If the Contractor submits a computer generated version of a form that is different than the required form, then the rights and obligations of the parties will be determined based on the content of the required form.

(End of clause)

END OF SECTION 00700

SECTION 00800

SPECIAL CONTRACT REQUIREMENTS

1. COMMENCEMENT, PROSECUTION AND COMPLETION OF WORK:

a. The Contractor shall be required to (i) commence work under this contract within
5 calendar days after the date the Contractor receives the notice to proceed, (ii) prosecute the work diligently, and (iii) complete the entire work ready for use not later than 420 calendar days after the date the Contractor receives the notice to proceed, except in case the Contracting Officer determines that seeding is not feasible during the construction period, the Contractor shall accomplish such seeding in the first planting period following the contract completion date. This action will not operate to extend the performance time for the balance of the work. The time stated for completion shall include final cleanup of the premises.

b. Location: The site of work is located at Niagara Falls IAP-ARS, NY. The site of the work is on a military reservation and all rules and regulations issued by the Commanding Officer covering general safety, security, and sanitary requirements, etc., shall be observed by the Contractor.

c. The Contractor shall furnish all labor, materials, equipment, and services (except those furnished by the Government) for the following work: Consolidated Maintenance Facility support facilities.

d. All work shall be in accordance with the drawings and specifications or instructions attached hereto and made a part thereof, or to be furnished hereafter by the Contracting Officer and subject, in every detail, to his supervision, direction, and instructions. Drawings supercede the specifications when there is a conflict between the two.

e. Magnitude of Construction Project: The estimated value of the proposed work is between $1,000,000 and $5,000,000.

f. Work Restrictions: The Contractor shall not be allowed to work on weekends, Federal Holidays, and other times when the Base may be closed.

Normal duty hours for work shall be from 7:15 A.M. to 4:00 P.M., Monday thru Friday. Requests for additiona work hours shall require written approval from the Contrcacting Officer at least 5 days in advance of the proposed work period.

g. Borrow, Excavation, Welding, and Burning Permits:

ACTIVITY: Borrow, SUBMISSION DATEW: 72 hours prior to work from Base Civil Engineers Bldg. 403, SUBMISSION FORM: AF103

ACTIVITY: Excavation SUBMISSION DATE: 72 hours prior to work from Base Civil Engineers Bldg. 403, SUBMISSION FORM: AF103.

ACTIVITY: Burning, SUBMISSION DATE: Each day prior to work from base Fire Dept., Bldg. 700.

ACTIVITY: Welding, SUBMISSION DATE: Each day prior to work from base Fire Dept. 700.

Permits shall be posted at a conspicuous location in the construction area.

Permits are the property of the Government and shall be returned to the Contracting Officer upon completion of permitted work.

Contractor to hand excavate within 3'-0" each side of any utility crossing.

2. LIQUIDATED DAMAGES – CONSTRUCTION

a. If the Contractor fails to complete the work within the time specified in the Contract, or any extension, the Contractor shall pay to the Government as liquidated damages, the sum of $400.00 for each day of delay.

b. If the Government terminates the Contractor's right to proceed, the resulting damage will consist of liquidated damages until such reasonable time as may be required for final completion of the work together with any increased costs occasioned the Government in completing the work.

c. If the Government does not terminate the Contractor's right to proceed, the resulting damage will consist of liquidated damages until the work is completed or accepted.

3. EQUAL OPPORTUNITY PREAWARD CLEARANCE OF SUBCONTRACTORS (APR 1984)

Notwithstanding the clause of this contract entitled "Subcontracts", the Contractor shall not enter into a first-tier subcontract for an estimated or actual amount of $1 million or more without obtaining in writing from the Contracting Officer a clearance that the

proposed subcontractor is in compliance with the equal opportunity requirements and therefore is eligible for award. (FAR 52.222-28)

4. INSURANCE – WORK ON A GOVERNMENT INSTALLATION

a. The Contractor shall procure and maintain during the entire period of his Performance under this contract the following minimum insurance:

(1) General Liability Insurance (Comprehensive form of policy):

Bodily Injury Liability - $500,000 per occurrence.

(2) Automobile Liability Insurance (Comprehensive form of policy):

Bodily Injury Liability - $200,000 per person and $500,000 per accident.

Property Damage Liability - $20,000 per accident.

(3) Workmen's Compensation and Employer's Liability Insurance:

Compliance with applicable workmen's compensation and occupational disease statutes is required. Employer's liability coverage in the minimum amount of $100,000 is also required.

b. Prior to the commencement of work hereunder, the Contractor shall furnish to the Contracting Officer a certificate or statement of the above required insurance. The policies evidencing required insurance shall contain an endorsement to the effect that cancellation or any material change in the policies adversely affecting the interests of the Government in such insurance shall not be effective for such a period as may be prescribed by the laws of the State in which this contract is to be performed and in no event less than thirty (30) days after written notice thereof to the Contracting Officer.

c. The Contractor agrees to insert the substances of this clause, including this paragraph c., in all subcontracts hereunder.

5. PERFORMANCE OF WORK BY THE CONTRACTOR (1984 APR)

The Contractor shall perform on the site, and with its own organization, work equivalent to at least twenty (20) percent of the total amount of work to be performed under the contract. This percentage may be reduced by supplemental agreement to this contract if, during performing the work, the Contractor requests a reduction and the Contracting Officer determines that the reduction would be to the advantage of the Government. (FA$R 52.236-1)

6. CERTIFICATES OF COMPLIANCE

Any certificates required for demonstrating proof of compliance of materials with Specification requirements shall be executed in 4 copies. Each certificates shall be signed by an official authorized to certify in behalf of the manufacturing company and shall contain the name and address of the Contractor, the project name and location, and the quantity and date or dates of shipment or delivery to which the certification apply. Copies of laboratory tests reports submitted with certificates shall contain the name and address of the testing laboratory and the date or dates of the tests to which the report applies. Certification shall not be construed as relieving the Contractor from furnishing satisfying material, if, after tests are performed on selected samples, the material is found not to meet the specific requirements. (ECI 7-670.3)

7. IMPLEMENTING GUARANTEES

At any time subsequent to the acceptance by the Government of a completed Installation under this contract, which installation is required to be covered by a specific guarantee under the terms of the various sections in the TECHNICAL PROVISIONS, the Base Commander will be an authorized party for the purpose of implementing the provisions of such guarantees in behalf of the Government.

8. BID GUARANTEE

See contract clause entitled BID GUARANTEE in Section 00700 CONTRACT CLAUSES.

9. CONTRACT DRAWINGS, MAPS AND SPECIFICATIONS

See contract clause entitled CONTRACT DRAWINGS, MAPS AND SPEJCIFICATIONS in Section 00700 CONTRACT CLAUSES. For a listing of the contract drawings see drawing Sheet T-1.

10. RECORD DRAWINGS

a. General: The Contractor will maintain as-built drawings during the construction
and will develop final record drawings at the completion of individual facilities.

b. Computer-Aided Drafting (CAD): If CAD files are available for the project and in addition to all other requirements indicated herein, the Contractor shall be required to

update the Computer-Aided Drafting (CAD) record for the project drawings consist of computer disks or magnetic media in the appropriate CAD format (i.e. “Intergraph”, “AutoCAD”, etc.) for the project. If available the CAD record will be presented to the Contractor in addition to the mylar reproducible drawings after the approval of progress prints as indicated in paragraph “Preliminary Submittal”, below. The Contractor will update the CAD record identical to the final as-built drawings, and will return the CAD record to the Contracting Officer’s representatives with the same requirements and late penalty as indicated in paragraph “Final Requirements”, below. Scanned drawings will not be acceptable. All other requirements indicated herein will still apply. The Contractor may use the updated CAD record to print blue-line or Mylar drawings as required.

a. Progress As-built Prints: The Contractor shall mark up one set of paper prints to
Show as-built construction conditions. These as-built prints shall be kept current and available on the job site at all times. All changes from the contract plans that are made in the work or additional information which might be uncovered in the course of construction shall be accordingly and neatly recorded as they occur by means of details and notes. The as-built prints will be jointly inspected for accuracy and completeness by the Contracting Officer’s representative and a responsible representative of the Contractor prior to submission of each monthly pay estimate. The prints shall show the following information, but not limited thereto:

(1) The location and description of any utility lines, valves, or other installations of any kind within the construction area. The location includes dimensions to permanent features.

(2) The location and dimensions of any changes with the building and structure.

(3) Correct grade or alignment of roads, structures or utilities if any changes were made from the contract plans.

(4) Correct elevations if changes were made in site grading

(5) Changes in details of design or additional information obtained from working drawings specified to be prepared and/or furnished by the Contractor including but not limited to fabricated, erection, installation plans and placing details, pipe sizes, insulation material, dimensions of equipment foundations, etc.

(6) The topography and grades of all drainage installed or affected as part of the project construction.

(7) All changes, which result from contract modifications.

(8) Where contract drawings or specifications allow options, only the option selected for construction shall be shown on the as-built prints.

(9) All amendments to the contract drawings issued during the solicitation period shall be posted on the as-built drawings.

d. Preliminary Submittal: The Contractor shall prepare two copies of progress prints and these shall be delivered to the Contracting Officer at the time of final inspection of individual facilities for his review and approval. These as-built prints shall be neat, legible and accurate. Upon approval, one copy of the as-built prints will be returned to the Contractor for use in preparation of final as-built drawings. Upon review, if the drawings are found to contain errors and/or omission, they shall be returned to the Contractor for corrections and return of the as-built prints to the Contracting Officer within ten (10) calendar days.

e. Record Drawing Preparation: After approval of the progress as-built prints, the mylar drawings shall be modified as may be necessary to correctly show all the features of the project as it has been constructed by bringing the contract set into agreement with the approved as-built prints, adding such additional drawings as may be necessary. The Contractor shall be responsible for the protection and safety thereof until returned to the Contracting Officer. Any drawings damaged or lost by the Contractor shall be satisfactorily replaced by the Contractor at his expense.

(1) Only personnel proficient in the preparation of engineering drawings to standards satisfactory and acceptable to the Government shall be employed to modify the Mylar reproduction drawings or prepare additional new drawings. All additions and corrections to the contract drawings shall be neat, clean and legible, and shall match the adjacent line work and/or lettering being annotated in type, density, size and style. All drafting work shall be done using the same medium (pencil, plastic lead or ink) that was employed on the original contract drawings and with graphic lead on paper base material. The Contracting Officer will review all record drawings for accuracy and conformance to the above specified drafting standards. The Contractor shall make all corrections, changes, additions and deleting required to meet these standards. The title block to be used for any new as-built drawings shall be similar to that used on the original contract drawings.

(2) When final revisions have been completed, each drawing shall be lettered or stamped with the words “RECORD DRAWING AS-BUILT” followed by the name of the Contractor in lettering at least 3/16” high. All original contract drawings shall be marked either “s-Built” drawing denoting no revision on the sheet or “Revised As-Built” denoting one or more revisions. All revisions to the original contract drawings will be dated in the revision block.

f. Final Requirements: After receipt by the Contractor of the approved as-built prints and the mylar reproducible drawings, the Contractor will make final record drawings

submitted within 30 days. The submittal shall consist of the completed record drawings, two blue line prints of these drawings and the return of the approved marked-up as-built prints. They shall be complete in all details. All paper prints and reproducible drawings will become property of the Government upon final approval. Failure to submit as-built drawings and final record drawings as required herein shall be cause for withholding any payment due the Contractor under this contract. Approval and acceptance of the final record drawings shall be accomplished before final payment is made to the Contractor.

g. Beneficial Occupancy Drawings: If the Government accepts beneficial occupancy of a facility, and the Contractor is unable to provide the final record drawings within 45 days after the date of beneficial occupancy, the Contractor shall provide paper sepias for that facility. The paper sepias shall incorporate all changes to as-built drawings made up to the time of beneficial occupancy. Contractor is still obligated to comply with "Final Requirements" paragraph above.

h. Payment: No separate payment will be made for the as-built and record drawings required under this contract whether or not CAD record is updated, and all costs in connection therewith shall be considered a subsidiary obligation of the Contractor.

11. DESIGNATION OF PROPERTY ADMINISTRATOR

The Chief, Property and Accounting Section, U.S. Army Engineer District, New York, Federal Building, 26 Federal Plaza, New York, N.Y. 10278-0090 is designated as Property Administrator, in connection with this contract.

12. PHYSICAL DATA

Information and data furnished or referred to below are furnished for the Contractor's information. However, it is expressly understood that the Government will not be responsible for any interpretation or conclusion drawn therefrom by the Contractor. (FAR 52.236-4)

a. Weather Conditions: Climatological data determined from records of the U.S. Weather Bureau Station, Buffalo, NY

Mean Annual Temperature:	47.6 degrees F
Mean Annual Precipitation:	37.52 inches

See also paragraph entitled TIME EXTENSIONS FOR UNUSUALLY SEVER WEATHER.

a. Transportation Facilities:

(1) Railroads: Conrail serves the locality of the proposed work. The Contractor shall make all arrangements at his expense for the use of sidings necessary for the delivery of materials, equipment, supplies, and other facilities required for completion of the work. The Contractor's use of sidings must be arranged so as not to interrupt or delay the operation of the Military reservation.

(2) Highways and Roads: Lockport Road and Walmore Road serves the locality of the proposed work. Roads within the military reservation proposed to be used by the Contractor, shall be subject to prior approval of the Post authorities and such roads, if used, shall be maintained throughout construction and shall be restored to as good condition as existed prior to their use. The Contractor shall also construct such temporary haul roads and bridges as may be necessary for the conduct of his work. Any such temporary construction shall be restored to its original condition. All costs for the use of existing transportation facilities, for the construction of temporary facilities, and for maintenance, repair, removal and restoration shall be borne by the Contractor.

13. PRICING OF ADJUSTMENTS

When costs are a factor in any determination of a contract price adjustment pursuant to the Changes clause or any other clause of this contract, such costs shall be in accordance with Part 31 of the Federal Acquisition Regulation and DFARS 52.215-7000 (APR 1985) as follows: In determining whether a pricing adjustment is expected to exceed $100,000, the term "pricing adjustment" shall mean "the aggregate increases and /or decreases in cost plus applicable profits."

14. PAYMENT FOR MATERIALS DELIVERED OFF-SITE

Pursuant to the Contract Clause in this contract titled :Payment Under Fixed-Price Construction Contracts", materials delivered to the Contractor at locations other than the site of the work may be taken into consideration in making payments if included in payment estimates and if all the conditions of the Contract Clauses are fulfilled. Payment for items delivered to locations other than the work site will be limited to those materials which have been approved, if required by the technical provisions; those materials which have been fabricated to the point where they are identifiable to an item of work required under this contract. Such payment will be made only after receipt of paid or receipted invoices or invoices with cancelled check showing title to the items in the prime contractor and including the value of materials and labor incorporated into the item.

15. EQUIPMENT OWNERSHIP AND OPERATING EXPENSE SCHEDULE

a. Allowable cost for construction and marine plant and equipment in sound

workable condition owned or controlled and furnished by a contractor or subcontractors at any tier shall be based on actual cost data when the Government can determine both ownership and operating costs for each piece of equipment or equipment groups of similar serial and series from the Contractor's accounting records. When both ownership and operating costs cannot be determined from the Contractor's accounting records, equipment costs shall be based upon the applicable provisions of EP 1110-1-8, *"Construction Equipment Ownership and Operating Expense Schedule," Region 1. Working conditions shall be considered to be average for determining equipment rates using the schedule unless specified otherwise by the Contracting Officer. For equipment not included in the schedule, rates for comparable pieces of equipment may be used or a rate may be developed using the formula provided in the schedule. For forward pricing, the schedule in effect at the time of negotiation shall apply. For retrospective pricing, the schedule in effect at the time the work was performed shall apply.

(* This manual can be ordered from the Government Printing office by calling telephone number (202) 783-3238. There is a charge for the manual.)

b. Equipment rental costs are allowable, subject to the provisions of FAR 31.105(d)(ii) and FAR 31.205-36 substantiated by certified copies of paid invoices. Rates for equipment rented from an organization under common control, lease-purchase or sale-leaseback arrangements will be determined using the schedule except that rental costs leased from an organization under common control that has an established practice of leasing the same or similar equipment to unaffiliated lessees are allowable. Costs for major repairs and overhaul are unallowable.

c. When actual equipment costs are proposed and the total amount of the pricing action is over $25,000, cost or pricing data shall be submitted on Standard Form 1411, "Contract Pricing Proposal Cover Sheet." By submitting cost or pricing data, the Contractor grants to the Contracting Officer or an authorizing representative the right to examine those books, records, documents and other supporting data that will permit evaluation of the proposed equipment costs. After price agreement the Contractor shall certify that the equipment costs or pricing data submitted are accurate, complete and current.

16. <u>ALTERATIONS IN CONTRACT</u> (APR 1984)

Portions of this contract are altered as follows:

Add the following sentence to paragraph "g" of basic contract clause, SPECIFICATIONS AND DRAWINGS FOR CONSTRUCTION (1984 APR):

"Upon completing the work under this contract, the Contractor shall furnish a complete set of all shop drawings as finally approved. These drawings shall show all changes and revisions made up to the time the equipment is completed and accepted."

Alt.1 (APR 1984) (FAR 52.236-21) (7-602.54 (b) (1) OCT 1976)

17. AVAILABILITY AND USE OF UTILITY SERVICES (APR 1984)

a. The Government shall make all reasonably amounts of utilities available to the Contractor from existing outlets and supplies, as specified in the contract. Unless otherwise provided in the contract, the amount of each utility service consumed shall be charged to or paid for by the Contractor at prevailing rates charged to the Government or, where the utility is produced by the Government, at reasonable rates determined by the Contracting Officer. The Contractor shall carefully conserve any utilities furnished without charge.

b. The Contractor, at its expense and in a workmanlike manner satisfactory to the Contracting Officer, shall install and maintain all necessary temporary connections and distribution lines, and all meters required to measure the amount of each utility used for the purpose of determining charges. Before final acceptance of the work by the Government, the Contractor shall remove all temporary connections, distribution lines, meters and associated paraphernalia. (FAR 52.235-14)

18. SALVAGE MATERIALS AND EQUIPMENT

The Contractor shall maintain adequate property control records for all materials or equipment specified to be salvaged. These records may be in accordance with the Contractor's system of property control, if approved by the property administrator. The Contractor shall be responsible for the adequate storage and protection of all salvaged materials and equipment and shall replace, at no cost to the Government, all salvage materials and equipment which are broken or damaged during salvage operations as the result of his negligence, or while in his care. (DoD FAR Supplement 52.236-7005)

19. IDENTIFICATION OF GOVERNMENT-FURNISHED PROPERTY (APR 1984)

a. The Government will furnish to the Contractor the property identified in the Schedule to be incorporated or installed into the work or used in performing the contract. The listed property will be furnished f.o.b. railroad cars at the place specified in the contract Schedule or f.o.b. truck at the project site. The Contractor is required to accept delivery, pay any demurrage or detention charges, and unload and transport the property to the job site at its own expense. When the property is delivered, the Contractor shall verify its quantity and condition and acknowledge receipt in writing to the Contracting Officer. The Contractor shall also report in writing to the Contracting Officer within 24 hours of delivery any damage to or shortage of the property as received. All such property shall be installed or incorporated into the work at the expense of the Contractor, unless otherwise indicated in this contract.

b. Each item of property to be furnished under this clause shall be identified in the Schedule by quantity, item and description. (FAR 52.245-3)

Item No.	Description	Quantity
	Lead Line Doors from 706	

20. CONSTRUCTION PROJECT SIGNS

The Contractor shall construct two signs; one for project identification and the other to show on-the-job safety performance.

a. Sample sign drawings together with mounting and fabrication details are provided at the end of this section. The signs shall be erected as soon as possible and within 15 calendar days after the date of Notice to Proceed.

b. The two signs are to be displayed side by side and mounted for reading by passing viewers. Exact placement location will be designated by the Contracting Officer.

c. Panels are fabricated using HDO (High-Density Overlay) plywood with dimensional lumber uprights and bracing. The sign faces are non-reflective vinyl.

d. All legends are to be die-cut or computer-out in the sizes and type-faces specified and applied to the white panel background following the graphic formats shown on the attached sheets. The Communications Red panel on the left side of the construction project sign with Corps signature (reverse version) is screen printed onto the white background.

e. No separate payment will be made for erecting and maintaining the signs and all costs in connection therewith will be considered the obligation of the Contractor. Upon completion of the project, the Contractor shall remove the signs from the work area.

21. LABOR SURPLUS AREA EXPENDITURE REQUIREMENTS (JUL 1978)

a. The site of the construction work is located in an area determined by the Secretary
of Labor to be a Labor surplus Area. Accordingly the Contractor hereby agrees to perform a substantial portion of the contract work in this or in any other labor surplus area. “Substantial portion” means the aggregate costs that will be incurred by the Contractor and his first-tier subcontractors and suppliers, on account of manufacturing, production, or services performed in this or any labor surplus area, and the costs that will

be incurred by second-tier and lower-tier subcontractors on the construction site will exceed fifty percent (50%) of the price of this contract.

b. Upon request, the Contractor shall furnish to the Contracting Officer data to substantiate that this obligation is satisfied.

c. The Contracting Officer will furnish upon request a list of labor surplus areas.

22. TIME EXTENSIONS FOR UNUSUALLY SEVERE WEATHER

1. This provision specifies the procedure for determination of time extension for usually severe weather in accordance with the contract clause entitled "Default: (Fixed Price Construction)." In order for the Contracting Officer to award a time extension under this clause, the following conditions must be satisfied:

a. The weather experienced at the project site during the contract period must be found to be unusually severe, that is, more severe than the adverse weather anticipated for the project location during any given month.

b. The unusually severe weather must actually cause a delay to the completion of the project. The delay must be beyond the control and without the fault or negligence of the Contractor.

2. The following schedule of monthly anticipated adverse weather delays is based on National Oceanic and Atmospheric Administration (NOAA) or similar data for the project location and will constitute the base line for monthly weather time evaluations. The Contractor's progress schedule must reflect these anticipated adverse weather delays in all weather dependent activities.

MONTHLY ANTICIPATED ADVERSE WEATHER DELAY
WORK DAYS BASED ON (5) DAY WORK WEEK

JAN	FEB	MAR	APR	MAY	JUN	JUL	AUG	SEP	OCT	NOV	DEC
10	9	9	9	8	8	5	8	7	5	9	10

3. Upon acknowledgment of the Notice to Proceed (NTP) and continuing throughout the contract, the Contractor will record on the daily CQC report, the occurrence of adverse weather and resultant impact to normally scheduled work. Actual adverse weather delay days must prevent work on critical activities for 50 percent or more of the Contractor's scheduled work day. The number of actual adverse weather delay days shall include days impacted by actual adverse weather (even if adverse weather occurred in

previous month), be calculated chronologically from the first to the last day of each month, and be recorded as full days. If the number of actual adverse weather delay days exceeds the number of days anticipated in paragraph 2 above, the Contracting Officer will convert any qualifying delays to calendar days, giving full consideration for equivalent fair weather work days, and issue a modification in accordance with the contract clause entitled "Default (Fixed Price Construction)". (ER 415-1-5) (31 Oct 89)

23. SCHEDULING AND DETERMINATION OF PROGRESS

Pursuant to the contract clause, SCHEDULES FOR CONSTRUCTION CONTRACTS, the Contractor shall prepare and submit for approval a practicable project schedule. The type of schedule and detailed requirements as well as timing of this submittal shall be as specified in specification section 'PROJECT SCHEDULE'.

This schedule will be the medium through which the timeliness of the Contractor's construction effort is appraised. When changes are authorized that result in contract time extensions, Contractor shall submit a modified schedule for approval by the Contracting Officer.

The terms of Contract Clause, SCHEDULING FOR CONSTRUCTION CONTRACTS, with reference to overtime, extra shifts, etc., may be invoked when the Contractor fails to start or complete work features or portions of same by the time indicated by the milestones dates on the approved project schedule, or when it is apparent to the Contracting Officer from the Contractor's actual progress that these dates will not be met.

Neither on the project schedule as originally submitted nor on any updated periodic schedules which the Contractor is required to prepare and submit, shall be actual progress to be entered include or reflect any materials which even though on the site, are not yet installed or incorporated in the work. For payment purposes only, an allowance will be made by the Contracting Officer of up to 100 percent of the invoiced cost of materials or equipment delivered to the site but not incorporated into the construction, pursuant to Contract Clause, PAYMENT UNDER FIXED-PRICE CONSTRUCTION CONTRACTS. The making of such an allowance will be contingent upon a determination by the Contracting Officer that the Contractor's compliance with the quality control requirements of the contract is more than satisfactory.

24. IDENTIFICAITON OF EMPLOYEES

The Contractor shall be responsible for furnishing to each employee and for requiring each employee engaged on the work to display such identification as may be approved and directed by the Contracting Officer. All prescribed identification shall immediately b

delivered to the Contracting Officer for cancellation upon the release of any employees. When required by the Contracting Officer, the Contractor shall obtain and submit finger-prints of all persons employed or to be employed on the project.
(DOD FAR Supplement52.236-7007)

25. FIELD OFFICE

The Contractor shall furnish at the job site a 20 feet by 15 feet field office for the use by Government representatives. The desired location will be designated by the Contracting Officer. The building shall be well constructed and properly ventilated and shall contain a closet and door and windows which shall be capable of being locked, four (4) chairs, one (1) plan rack and drawing board, one (1) desk, and one (1) two-drawer filing cabinet. The furniture may be of a temporary nature. The Contractor shall also provide adequate electric lighting. minimum 4 duplex electrical receptacles, drinking water, heat, toilet facilities, air conditioning, janitorial services and maintenance services. The field office shall be removed from the project site when and as directed by the Contracting Officer.

b. The Contractor, at his option, may furnish a trailer not less than 20 feet long. The trailer shall be approved by the Contracting Officer and shall have the facilities and be serviced as specified above for the field office.

c. No separate payment will be made for providing the above accommodations and all costs in connection therewith will be considered the obligation of the Contractor.

26. NOT USED.

27. QUANTITY SURVEYS (APR 1984)

a. Quantity surveys shall be conducted, and the data derived from these surveys shall be used in computing the quantities of work performed and the actual construction completed and in place.

*Alternate b. The Contractor shall conduct the original and final surveys and surveys for any periods for which progress payments are requested. All these surveys shall be conducted under the direction of a representative of the Contracting Officer, unless the Contracting Officer waives this requirement in a specific instance. The Government shall make such computations as are necessary to determine the quantities of work performed or finally in place. The Contractor shall make the computations based on the surveys for any periods for which progress payments are requested.

c. Promptly upon completion a survey, the Contractor shall furnish the originals of all field notes and all other records relating to the survey or to the layout of the work to the Contracting Officer, who shall use them as necessary to determine the amount of

progress payments. The Contractor shall retain copies of all such material furnished to the Contracting Officer. (FAR 52.236-16)

28. NOT USED.

29. NOT USED.

30. SUPERINTENDENCE OF SUBCONTRACTORS (JAN 1965)

a. The Contractor shall be required to furnish the following, in addition to the superintendence required by the Contract Clause titled, 'SUPERINTENDENCE BY THE CONTRACTOR."

(1) If more than 50% and less than 705 of the value of the contract work is subcontracted, one superintendent shall be provided at the site and on the Contractor's payroll to be responsible for coordinating, directing, inspecting and expediting the subcontract work.

(2) If 70% or more of the value of the work is subcontracted, the Contractor shall be required to furnish two such superintendents to be responsible for coordinating, directing, inspecting and expediting the subcontract work.

b. If the Contracting Officer, at any time after 50% of the subcontracted work has been completed, finds that satisfactory requirement is being made, he may waive all or part of the above requirement for additional superintendence subject to the right of the Contracting Officer to reinstate such requirement if at any time during the progress of the remaining work he finds that satisfactory progress is not being made.
(DOD FAR Supplement 52.236-7008)

31. PROCEDURES FOR SUBMISSIONN AND PAYMENT OF ALL CONTRACT PAYMENTS

In addition to the requirements contained in the Contract Clause entitled "PAYMENTS UNDER FIXED-PRICE CONSTRUCTION COTNRACTS" and to implement the requirements of the Prompt Payment Act Amendments of 1988, P.L. 100-496, the following shall apply to all payments made under this contract:

a. At the time of submission of the progress chart, the Contractor shall submit for approval by the Contracting officer or his authorized representative a breakdown of the contract work which shall be to the degree of detail required by the Contracting Officer, or his representative, to effect reasonable progress payments. The Contracting Officer, or his representative, shall review this breakdown within 30 calendar days after receipt and either advise the Contractor that it is approved or disapproved, and if disapproved the reasons for disapproval. Only after the breakdown is approved shall any payment invoice

be accepted from the Contractor and any payment made to him. The Contracting Officer can determine if it is in the best interest of the Government to make payment without an approved breakdown; however, in no case shall more than 10% of the contract amount be paid unless the breakdown is approved.

a. The Contractor shall submit his request for payment by submission of a proper invoice tot he office or person(s) designated in subparagraph c. For purposes of payment a "proper invoice" is defined as the following:

(1) An estimate of the work completed in accordance with the approved breakdown indicating the percentage of work of each item and the associated costs.

(2) A properly completed Eng Form 93 and 93a (where required).

(3) All contractual submissions indicated elsewhere in this contract to be submitted with payment, such as updated progress schedules, updated submittal registers, etc.

(4) The following certification executed by a responsible official of the organization authorized to bind the firm. A "responsible official" would be a corporate office, partner, or owner, in the case of a sole proprietorship.

I hereby certify, to the best of my knowledge and belief, that –

(a) The amounts requested are only for performance in accordance with the specifications, terms and conditions of the contract;

(b) Payments to subcontractors and suppliers have been made form previous payments received under the contract and timely payments will be made from the proceeds of the payment covered by this certification, in accordance with subcontract requirements and the requirements of Chapter 39 of Title 31, Untied States Code; and

(c) This request for progress payments does not include any amounts which the prime contractor intends to withhold or retain from a subcontractor or supplier in accordance with the terms and conditions of the subcontract.

(d) All required prime and subcontractor payrolls have been submitted.

_____
(Name)

_____
(Title)

_____

(Date)

c. The Government shall designate the office or person(s) who shall first receive the invoice submissions and the Contractor shall be so notified at the pre-construction conference. In addition to the designated Project Engineer, the Contractor shall at the same time submit one copy of the detailed breakdown and the Eng Form 93 and 93a Form to the Area Engineer.

d. The Government representative shall return any request for payment which is deemed defective within 7 days of receipt and shall specify the defects. If the defect concerns a disagreement as tot he amount of work performed and or the amount of the payment being submitted, the Government and the Contractor's representative should meet to resolve the difference and reach agreement. Upon agreement, the Contractor shall submit a new breakdown and Eng Form 93 (and 93a) and any other submissions requiring correction. These will be incorporated with the previous submittal and will then constitute a proper invoice.

e. If agreement cannot be reached, the Government shall determine the proper amount per Contract Clause, PAYMENTS UNDER FIXED-PRICE CONSTRUCTION CONTRACTS and process the payment accordingly. In this event, a "proper invoice" for Prompt Payment Act purposes will not have been submitted to the Government.

f. The Government shall pay the Contractor in accordance with the following time frames:

(1) Progress Payments . From the date a "proper invoice" is received, in accordance with subparagraphs b and d of this clause, the Government will issue a check with 14 calendar days.

(2) Reduction in Retainage Payment. If during the course of the contract, a reduction in retainage payment is required, the Government shall issue a check within 14 calendar days after the approval of the release to the Contractor by the Contracting Officer or his authorized representative.

(3) Final Payment. A final payment request shall not be considered valid until the Contractor has fulfilled all contract requirements including all administrative items, payrolls, warranties, etc. and has submitted a release of claims. When the Contractor has fulfilled all contract requirements and a "proper invoice" has been submitted, the Government shall issue a check within 14 days from the date of acceptance o the project by the Contracting Officer.

32. <u>VERIFICATION OF SMALL BUSINESS UTILIZAITON</u>

a. This clause is applicable to small business concerns whose contracts exceed

$1,000,000.

b. In accordance with the clause at FAR 52.219-8, entitled UTILIZATION OF SMALL BUSINESS CONCERNS AND DISADVANTAGED BUSINESS CONCERNS, in effect on the date of this contract, the Contracting Office may survey the extent of small and small disadvantaged business utilization under this contract. The Contractor may be required to report to the Contracting Officer statistical data on the number and dollars amounts of subcontracting awards with small business and small disadvantaged businesses.

c. As appropriate, the Contracting Officer may require one or more follow-up reports to the initial report.

d. The Contractor agrees to insert this clause in any subcontract that may exceed $1,000,000, including this subparagraph d.

33. HAZARDOUS MATERIAL IDENTIFICAITON & MATERIAL SAFETY DATA (NOV 1991)

a. Hazardous material, as used in this clause, includes any material defined as hazardous under the latest version of Federal Standard No. 313 (including revisions adopted during the term of the contract.)

b. The offeror must list any hazardous material, as defined in paragraph a of this clause, to e delivered under this contract. The hazardous material shall be properly identified and include any applicable identification number, such as National Stock Number or Special Item Number. This information shall also be included on the Material Safety Data Sheet submitted under this contract.

Material (if none, insert NONE)

_____

_____

_____

Identification No.

_____

_____

_____

c. The apparently successful offeror, by acceptance of the contract, certifies that the list in paragraph b of this clause is complete. This list must be updated during performance of the contract whenever the Contractor determines that any other material to be delivered under this contract is hazardous.

d. The apparently successful offeror agrees to submit, for each item as required prior to award, a Material Safety Data Sheet, meeting the requirements of 29 CFR 1910.1200(g) and the latest version of Federal Standard No. 313, for all hazardous material, identified in paragraph b of this clause. Data shall be submitted in accordance with Federal Standard No. 313, whether or not the apparently successful offeror is the actual manufacturer of these items. Failure to submit the Material Safety Data Sheet prior to award my result in the apparently successful offeror being considered nonresponsible and ineligible for award.

e. If, after award, there is a change in the composition of the item(s) or a revision to Federal Standard No. 313, which renders incomplete or inaccurate the data submitted under paragraph d of this clause or the certification submitted under paragraph c of this clause, the Contractor shall promptly notify the Contracting Officer and resubmit the data.

f. Neither the requirements of this clause nor any act or failure to act by the Government shall relieve the Contractor of any responsibility or liability for the safety of Government, Contractor, or subcontractor personnel or property.

g. Nothing contained in this clause shall relieve the Contractor from complying with applicable Federal, State, and local laws, codes, ordinances, and regulations (including the obtaining of licenses and permits) in connection with hazardous material.

h. The Government's rights in data furnished under this contract with respect to hazardous material are as follows:

(1) To use, duplicate and disclose any data to which this clause is applicable. The purposes of this right are to -

(i) Apprise personnel of the hazards to which they may be exposed in using, handling, packaging, transporting or disposing of hazardous materials.

(ii) Obtain medical treatment for those affected by the material; and

(iii) Have other use, duplicate, and disclose the data for the Government for these purposes

(2) To use, duplicate, and disclose data furnished under this clause, in accordance with subparagraph (h)(1) of this clause, in precedence over any other clause of this contract providing for rights in data.

(3) The Government is not precluded from using similar or identical data acquired from other sources. (FAR 52.223-3)

34. SAFETY AND HEALTH REQUIREMENTS MANUAL

If this contract is for construction or dismantling, demolition, or removal of improvements with any Department of Army agency or component, the Contractor shall comply with all pertinent provisions of the latest version of U.S. Army Corps of Engineers Safety and Health Requirements Manual, EM 385-1-1, in effect on the date of the solicitation. The latest edition of the U.S. Army Corps of Engineers Safety and Health Requirements Manual, EM 385-1-1, as referenced in the Accident Prevention clause of Section 00700 CONTRACT CLAUSES, is dated 2 SEP 1996.

Before commencing the work, the Contractor shall: (1) Submit a written proposal for implementing the Accident Prevention Plan; and (2) Meet with representatives of the Contracting Officer to discuss and develop a mutual understanding relative to administration of the overall safety program.

35. SPECIAL SCHEDULING REQUIREMENTS FOR MECHANICAL AND ELECTRTICAL SYSTEMS

In reference to the contract clause entitled "PAYMENTS UNDER FIXED-PRICE CONSTRUCTION CONTRACTS", see Section 01452 TESTING FOR MECHANICAL AND ELECTRICAL SYSTEMS for additional scheduling requirements for such systems.

36. SUBMISSION OF CLAIMS

The following shall be submitted to the Contracting at the following address: U.S. Army Corps of Engineers, New York District, 26 Federal Plaza, New York, New York 10278-0090:

a. claims referencing or mentioning the Contracting Disputes Act of 1978

b. requests for a written decision by the Contracting Officer

c. claims certified in accordance with the Contract Disputes Act of 1978

No other Government representative is authorized to accept such requests. A copy shall also be provided to the Authorized Representative of the Contracting Officer.

The Contractor shall also provide the Contracting Officer with a copy of any requests for additional time, money or interpretation of contract requirements which were provided

to the Authorized Representative of the Contracting Officer and which have not been resolved after 90 days.

37. PARTNERSHIP IMPLEMENTATION PLAN

To more effectively accomplish this contract, the Government proposes to form a partnership with the Contractor. This partnership would draw on the strengths of each organization in an effort to achieve a quality product within budget and on schedule. This partnership would be bilateral in make-up and participation would be totally voluntary. The Contractor shall hire a facilitator who would be responsible to arrange for an offsite conference location, provide all workshop materials, and compile and distribute a completed partnering agreement to all participants within 30 days of the partnering session. Conference site location will be coordinated with the Contracting Officer for approval. Contractor should plan for the attendance of approximately 15-20 individuals from the Government in addition to the Contractor's and Sub-contractor's personnel. The costs associated with the partnership conference will be borne by the Contractor. It is anticipated that the partnership conference will be for one day each time and will be held on a monthly basis.

38. PRECONSTRUCTION CONFERENCE

a. A preconstruction conference will be arranged by the Contracting Officer, or his
Representative, after award of contract and before commencement of work. The Contracting Officer's representative will notify the Contractor of the time and date set for the meeting. At this conference, the Contractor shall be oriented with respect to Government procedures and line of authority, contractual, administrative, and construction matters. Additionally, a schedule of required submittals will be discussed.

b. The Contractor shall bring to this conference the following items in either completed or draft form:

- The Contractor's order of work
- Accident Prevention Plan
- Quality Control Plan
- Letter appointing Superintendent
- List of subcontractors.

39. GOVERNMENT RESIDENT MANAGEMENT SYSTEM

The Government will utilize an in-house NAN/Contract Administration program

entitled “Resident Management System” (RMS). The Contractor shall utilize Government furnished CQC Report Forms. These forms may be in addition to other forms generated by the Contract’s NAS system; however, the Government furnished forms are required to be submitted and kept current. The Contractor shall submit completed forms at the same time and in addition to the schedules required by the clauses of the contract entitled “Schedules for Construction Contracts”. RMS forms shall be updated and resubmitted as the work progresses and in accordance with the requirements specified herein. RMS includes, but is not necessarily limited to CQC, QC planning, pay activities, features of work, subcontractors, contractor staff, QC requirements, submittal register requirements and other pertinent information.

40. CONSTRUCTION COLOR BOARD SUBMITTALS

The Contractor shall submit four sets of color boards depicting samples of all finish materials. The color board (finishes sample submittal package) shall include all visible exterior and interior materials and finishes that are a part of the building (and/or structure) or built-in items provided under this contract. The color boards shall be delivered to each of the addresses listed below in the section. The Contractor shall furnish his color board submitted to each of the addresses within 90 days after receipt of the notice to proceed, but more than 30 days prior to ordering finishing materials. The Contractor should obtain approvals of his entire color board submission before beginning any work involving final finishes. The Contractor shall use the following format when assembling the color boards:

a. Provide the samples on 8 ½ x11-inch board modules with a maximum spread of 25 ½ x33-inches for foldouts. Label the modules with the project titles and design them to fit in a standard loose-leaf, three-post binder. The modules should support and anchor all samples. Anchor large or heavy samples with mechanical fasteners.

b. Organize the submittals in a logical manner to allow a fast review. Write descriptions and explanations clearly. Drawings and photographs must be clear and concise.

c. Organize samples by scheme with a separate scheme for each room or for groups of rooms with the same scheme. Coordinate the schemes by room names and numbers shown on the architectural floor plans and room finish and color schedule. Include floor plans and schedules in modules.

d. Indicate true pattern color and texture for interior material and finish samples. Carpet samples should be large enough to indicate a complete pattern or design, but not less than 3 by 5 inches.

e. Include color/finish pattern and texture for exterior materials and finishes

f. Provide at least a 6x6-inch square sample where either interior or exterior special finishes, such as architectural concrete or pre-finished textured metal panels, are required.

NOTE: This paragraph is a special requirement for Air Force projects. The A/E is to select one location and delete addresses for other bases. The A/E should verify number of copies and addresses with COE Technical Manager prior to final submission. Spec Computer File: C: COLORBOA)

41. YEAR 2000 COMPLIANCE

a. Commercial Computer Systems and Programming

The Contractor shall warrant fault free performance in the processing of date and related data (including but not limited to calculating, comparing, and sequencing) by all hardware and software products, individually and in combination from date of contract award. Fault free performance shall include the manipulation of this data when dates are in the 20th and 21st centuries and shall be transparent to the User.

b. Microprocessors as Part of Systems

All microprocessor-based equipment, software, or firmware which will be required to process date/time calculations, installed in any system in this contract shall be year 2000 compliant. Typical systems include, but are not limited to, Fire Alarm Systems, Intrusion Detection Systems, HVAC Control Systems, Utility or Energy Monitoring and Control Systems, Traffic Control systems, Elevator Controls, telephone systems, electrical substation controls, utility monitoring and controls at energy plants or fuel storage facilities, local area networks, communications systems, public address systems, and specialty systems such as for research laboratories, etc. These systems shall be year 2000 compliant and shall be able to accurately process date/time data (including, but not limited to, calculating, comparing, and sequencing) from, into, and between the 20th and 21st centuries, including leap year calculations. In addition, these systems, when used in combination with other information technology (either installed as part of this contract or by others) shall accurately process date/time data, provided the other information technology properly exchanges date/time data with it.

STATEMENT AND ACKNOWLEDGMENT

FORM APPROVED OMB NO
9000-0014

Public reporting burden for this collection of information is estimated to average .15 hours per response, including the time for reviewing instructions. Searching existing data sources, gathering and maintaining the data needed, and completing and reviewing the suggestions for reducing this burden, to the FAR Secretarial (VRS), Office of Federal Acquisition and Regulatory Policy, GSA Washington, D.C. 20405: and to the Office of Management and Budget, Paperwork Reduction Project (9000-0014), Washington, D.C. 20503

PART I - STATEMENT OF PRIME CONTRACTOR

1. PRIME CONTRACT NO.	2. DATE SUBCONTRACT AWARDED	3. SUBCONTRACT NUMBER

4. PRIME CONTRACTOR (Name, address and ZIP code)	5. SUBCONTRACTOR (Name, address and ZIP code)

6. The prime contractor states that under the contract shown in item 1, a subcontract was awarded on date shown in item 2 by (Name of Awarding Firm)

to the subcontractor identified in item 5, for the following work:

7. PROJECT	8. LOCATION	
9. NAME AND TITLE OF PERSON SIGNING	10. BY (Signature)	11. DATE SIGNED

PART II - ACKNOWLEDGMENT OF SUBCONTRACTOR

12. The subcontractor acknowledges that the following clauses of the contract shown in item 1 are included in this subcontract:

Contract Work Hours and Safety Standards Act - Overtime Compensation - Construction	David-Bacon Act
Payrolls and Basic Records	Apprentices and Trainees
Withholding of Funds	Compliance with Copeland Regulations
Disputes Concerning Labor Standards	Subcontracts
	Contract Termination-Debarment
	Certification of Eligibility

13. NAME(S) OF ANY INTERMEDIATE SUBCONTRACTORS, IF ANY

14. NAME AND TITTLE OF PERSON SIGNING	15. BY (Signature)	16 DATE SIGNED

24 October 1988

(Sample of Typical contractor Quality report)

CONTRACTOR'S NAME
(Address)

DAILY CONSTRUCTION QUALITY CONTROL REPORT

Contract No:_____ Date:_____ Report No._____
Project Name_____
Weather: (Clear) (P. Cloudy) (Cloudy); Temperature: ____Min.____Max; ____Rainfall ____in.

Contractor/Subcontractors/Supplier	Area of Responsibility
a.	
b.	
c.	
d.	
e.	
f.	
g.	

1. Definable Features of Construction in Progress: (Give briefly only definable features of work in progress and location. Refer to work performed by prime and/or subcontractor and/or supplier by letter in table above).

2. Material and/or Equipment Delivered to site:

3. Results of Surveillance:

Preparatory Phase (Attach minutes):

Initial Phase (Attach minutes):

Follow-up Phase (Include satisfactory work completed and/or deficiencies with action to be taken):

4. Tests Required by Plans and/or Specification Performed and results of Test:
(Attach results of test taken on previous dates).

5. Verbal Instructions Received: (List any instructions given by Government Personnel on construction deficiencies. Retesting required, etc., with action to be taken.

6. Safety Deficiencies Noted. (Describe corrective actions taken).

7. Remarks: (Cover any conflicts in plans, specifications, or instruction).

CONTRACTOR'S VERIFICATION: The above report is complete and correct and all material and equipment used and work performed during this reporting period are in compliance with the contract plans and specifications except as noted above.

Contractor's Authorized QC Representative

UNITED STATES AIR FORCE

GEOGRAPHIAE SCIENTIAEQUE CONFINIA PENETRAMUS

ENGINEERING AND SERVICES

AFVA 85-2

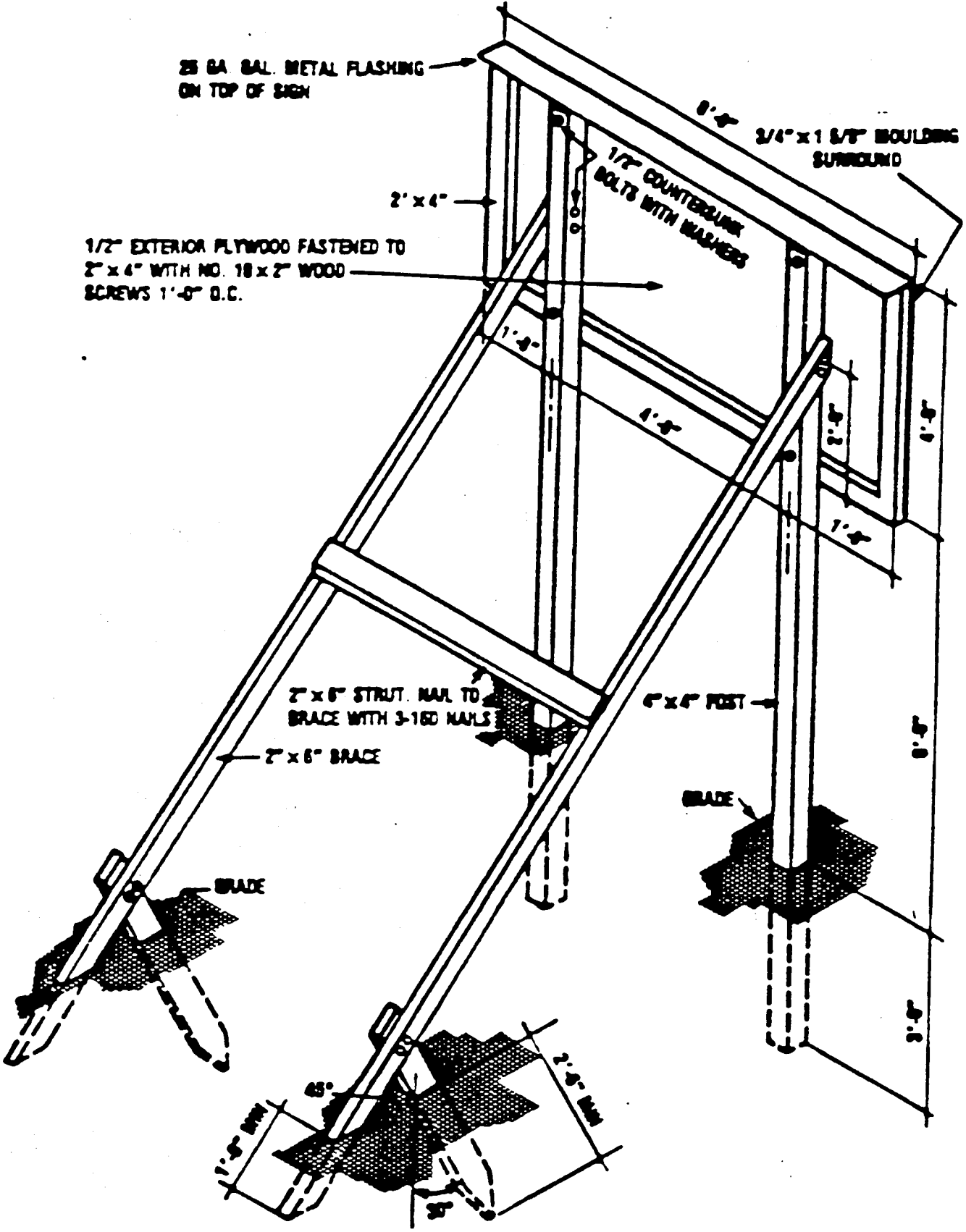

CONSTRUCTION SIGN ISOMETRIC
ERECTION DETAILS

All Construction Project Identification signs and Safety Performance signs are to be fabricated and installed as described below. The signs are to be erected at a location designated by the contracting officer and shall conform to the size, format, and typographic standards shown

The sign panels are to be fabricated from .75" High Density Overlay Plywood.

All graphics are to be applied to the background panel following the graphic formats as indicated.

Drill and insert six (6) .375" T-nuts from the front face of the HDO sign panel. Flange of T-nut to be flush with sign face.

Apply lettering and logo to prepared HDO plywood panel.

Sign uprights to be structural grade 4"x4" treated Douglas Fir or Southern Yellow Pine, No. 1 or better. Post to be 12' long. Drill six (6) .375" mounting holes in uprights to align with T-nuts in sign panel. Countersink (.5") back of hole to accept socket head cap screw (4"x.375").

Assemble sign panel and uprights. Imbed assembled sign panel and uprights in 4' hole. Bolt additional 2"x4" struts on inside face of uprights to reinforce installation as shown.

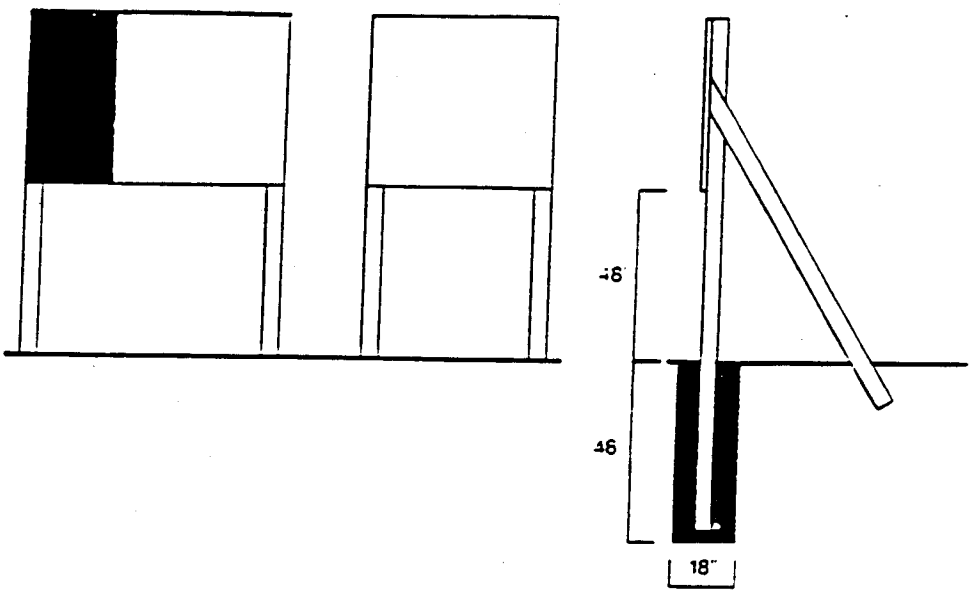

Construction Project Sign

Legend Group 1: Corps Relationship

1. _____
2. _____

Legend Group 2: Corps Signature

1. U.S. Army Corps
2. of Engineers

Legend Group 2A: District Name

1. _____
2. _____

Legend Group 3: Project Title

1. _____
2. _____
3. _____

Legend Group 4: Facility Name

1. _____
2. _____

Legend Group 5a: Designer

1. _____
2. _____
3. _____
4. _____
5. _____

Legend Group 5b: Contractor

1. _____
2. _____
3. _____
4. _____
5. _____

Introduction: Project Identification Sign

Below are two samples of the construction project identification sign showing how this panel is adaptable for use to identify either civil works projects with a local sponsor (top) or military (bottom). The graphic format for this 4' x 6' sign panel follows the legend guidelines and layout as specified below. The large 4' x 4' section of the panel on the right is to be white with black legend. For the top sign, the upper left 2' x 2' section of the sign with the full Corps signature is to be painted Communications Red with white lettering. The lower left 2' x 2' section of the sign shall match the local sponsor's colors with white lettering. For the bottom sign, the 2' x 4' left section of the sign with full Corps signature is to be painted Communications Red with white lettering. Mounting and fabrication details are provided.

Legend Group 1: One-to two-line description of Corps relationship to project.
Color: White
Typeface: 1.25" Helvetica Regular
Maximum line length: 19"

Legend Group 2: Two-line Corps Signature (US Army Corps of Engineers). Placed below Corps Castle
Color: White
Typeface: 1.5" Helvetica Bold

Legend Group 2a: District Name. Placed below Signature (6" Castle).
Color: White
Typeface: 1.25" Helvetica Regular

Legend Group 3: Words "Local Sponsor"
Color: White
Typeface: 1.25" Helvetica Regular
Maximum length: 19"

Legend Group 4: One-to-three lines for name of local sponsor
Color: White
Typeface: 1.5" Helvetica Regular

Legend Group 5: One- to three-line project title legend describes the work being done under this contract.
Color: Black
Typeface: 3" Helvetica Bold
Maximum line length: 42"

Legend Group 6: One- to two-line identification of project or facility (civil works) or name of sponsoring department (military).
Color: Black
Typeface: 1.5" Helvetica Regular
Maximum line length: 42"

Cross-align the first line of Legend Group 5 with the first line of the Corps Signature (US Army Corps) as shown.

Legend Groups 7a-b: One- to five-line identification of prime contractors including: type (general contractor, etc.) corporate or firm name, city, state.
Color: Black
Typeface: 1.25" Helvetica Regular
Maximum line length: 21"

All typography is flush left and rag right, upper and lower case with initial capitals only as shown.

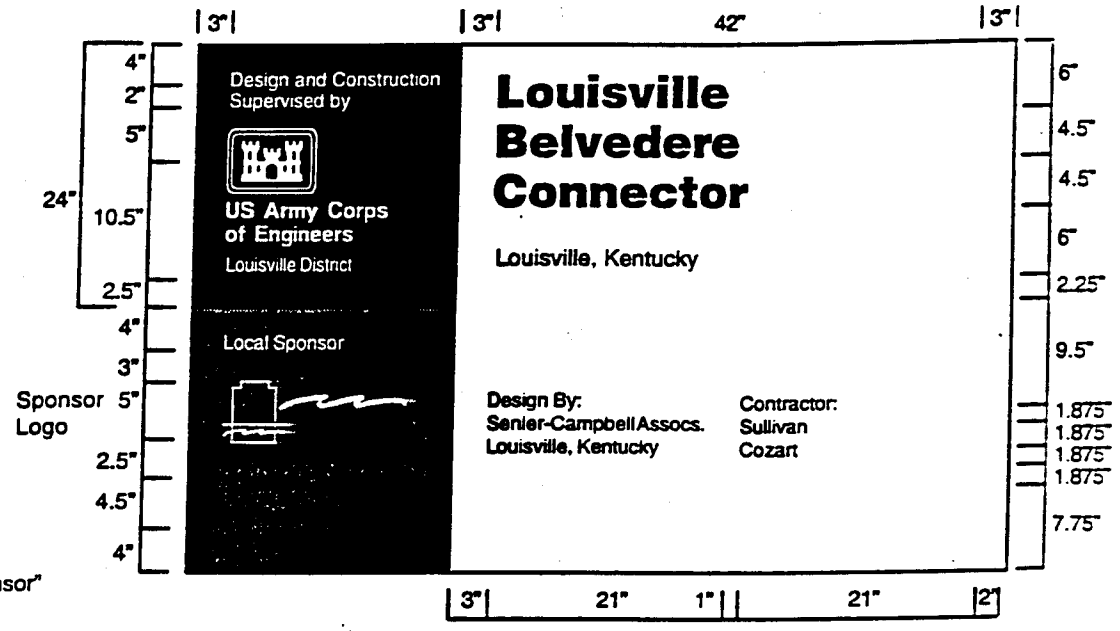

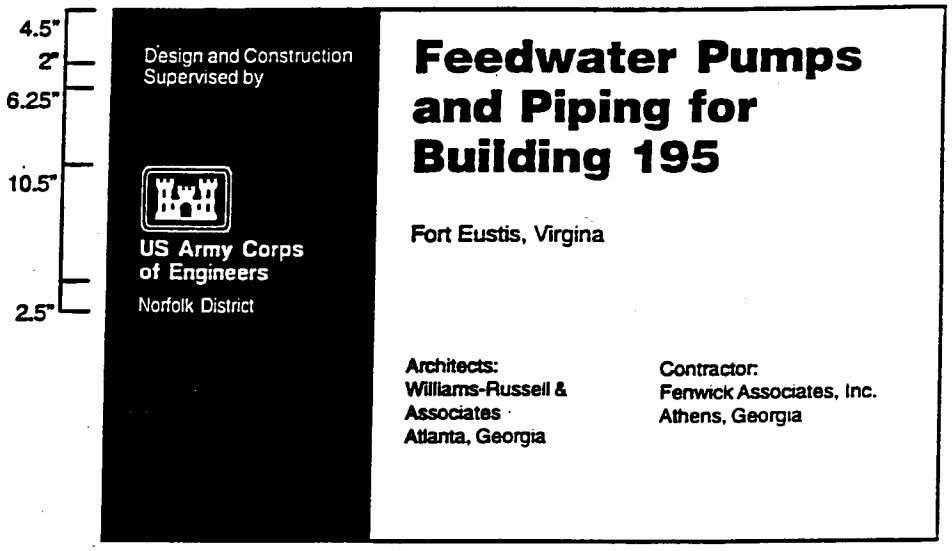

Legend Size	Panel Size	Post Size	Mounting Height	Color Bkg/Lgd
Various	4' x 6'	4" x 4"	48"	WH-RD/BK

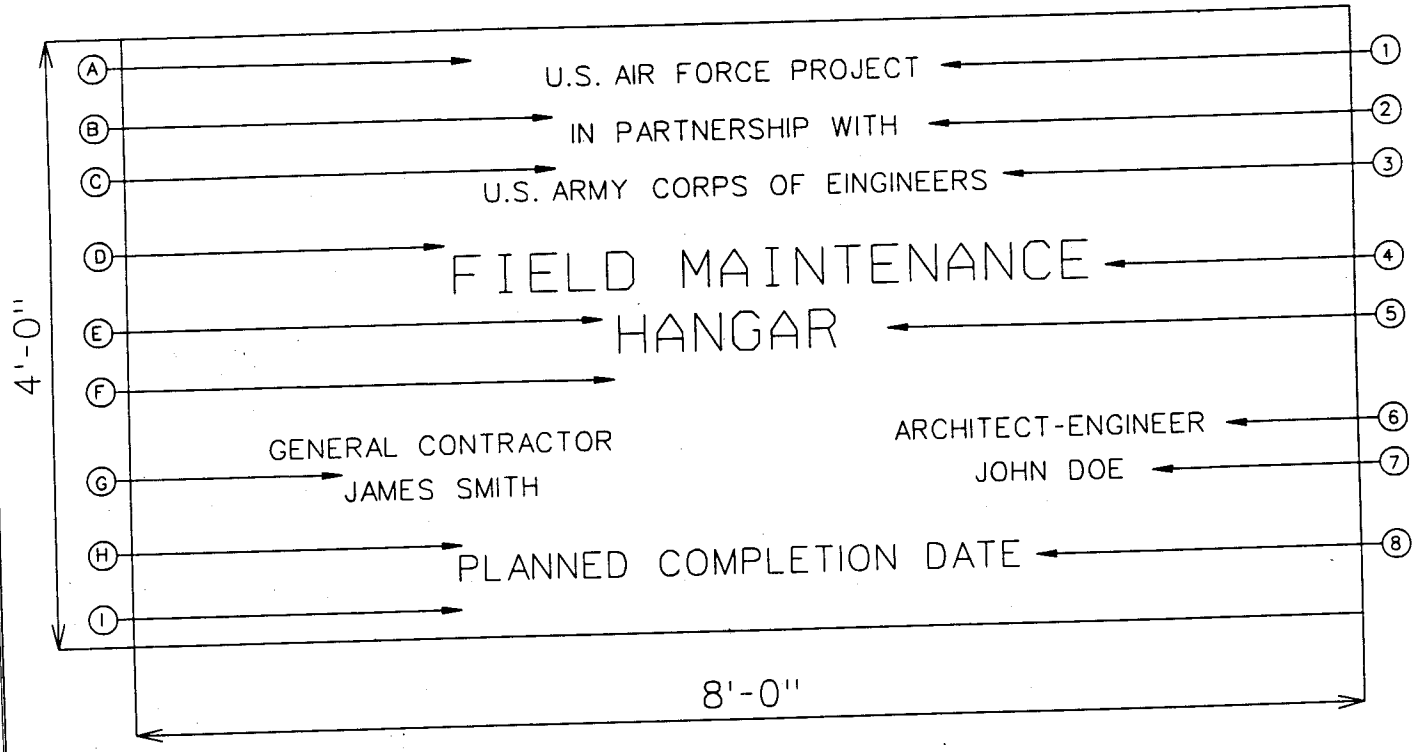

SAMPLE CONSTRUCTION SIGN FOR MILCON PROJECTS SCHEDULE

SPACE	HEIGHT	LINE	DESCRIPTION	LETTER HEIGHT	STROKE
A	3"	1	U.S. AIR FORCE PROJECT	1.5"	3/16"
B	1"	2	IN PARTNERSHIP WITH	1.5"	3/16"
C	1"	3	U.S. ARMY CORPS ENGINEERS	1.5"	3/16"
D	5"	4	PROJECT NAME	4"	1/2"
E	3"	5	PROJECT NAME CONT'D (IF REQUIRED)	4"	1/2"
F	5"	6	GENERAL CONTRACTOR/A-E	1.5"	3/16"
G	1"	7	GENERAL CONTRACTOR/A-E	1.5"	3/16"
H	4"	8	PLANNED COMPLETION DATE	2.5"	1/4"
I	3"				

f:/cddwgs.dgn Dec. 04, 1996 09:29:02

US Army Corps of Engineers

Louisville District

SUBMITTAL REGISTER

(ER 415-1-10)

CONTRACT NO.:

TITLE AND LOCATION

CONTRACTOR:

SPECIFICATION SECTION:

ACTIVITY NO	TRANS-MITTAL NO.	ITEM NO	SPECIFICATION PARAGRAPH NUMBER	DESCRIPTION OF ITEM SUBMITTED	TYPE OF SUBMITTAL									CLASSI-FICATION		REVIEWER	CONTRACTOR SCHEDULE DATES			CONTRACTOR ACTION			GOVERNMENT ACTION		REMARKS
					DATA	DRAWINGS	INSTRUCTIONS	SCHEDULES	STATEMENTS	REPORTS	CERTIFICATES	SAMPLES	RECORDS	O&M MANUALS	INFORMATION ONLY	GOVERNMENT APPROVED		SUBMIT	APPROVAL NEEDED BY	MATERIAL NEEDED BY	CODE	DATE	SUBMIT TO GOVERN-MENT	CODE	DATE	
a	b	c	d	e	f	g	h	i	j	k	l	m	n	o	p	q	r	s	t	u	v	w	x	y	z	aa

ENG FORM 4288-R, JAN 97 **EDITION OF MAR 95 IS OBSOLETE.** PAGE ____ OF ____ PAGES (Proponent: CEMP-CE)

Instructions

1. Section I will be initiated by the contractor in the required number of copies.

2. Each transmittal shall be numbered consecutively in the space provided for “Transmittal No.”. This number, in addition to the contract number, will form a serial number for identifying each submittal. For new submittals or resubmittals mark the appropriate box; in resubmittals, insert transmittal number of last submission as well as the new submittal number.

3. The “Item No.” will be the same “Item No.” as indicated on ENG FORM 4288-R for each entry on this form.

5. Separate transmittal form will be used for submittals under separate section of the specifications.

6. a check shall be placed in the “Variation” column when a submittal is not in accordance with the plans and specifications—also, a written statement to that effect shall be included in the space provided for “Remarks.

7. Form is self-transmittal, letter of transmittal is not required.

8. When a sample of material or Manufacturer’s Certificate of Compliance is transmitted, indicate “Sample” or “Certificate” in column c, Section I.

9. U.S. Army Corps of Engineers approving authority will assign action codes as indicated below in space provided in Section I column i to each item submitted. In addition they will ensure enclosures are indicated and attached to the form prior to return to the contractor. The Contractor will assign action codes as indicated below in Section I, column g. to each item submitted.

THE FOLLOWING ACTION CODES ARE GIVEN TO ITEMS SUBMITTED

A – Approved as submitted.

B – Approved, except as noted on drawings.

C – Approved, except as noted on drawings. Refer to attached sheet resubmission required.

D – Will be returned by separate correspondence.

E – Disapproved (See attached).

F – Receipt acknowledged.

FX – Receipt acknowledged, does not comply as noted with contract requirements.

G – Other *(Specify)*

10. Approval of items does not relieve the contractor from complying with all the requirements of the contract plans and specifications.

(Reverse of ENG form 4025-R)

EQUIPMENT-IN-PLACE LIST

Contract No._____

Description of Item:_____

Model No:_____

Serial No:_____

Capacity:_____

Name of Mfg:_____

Condition:_____

Checked by:_____Replacement Cost_____

Description of Item:_____

Model No:_____

Serial No:_____

Capacity:_____

Name of Mfg:_____

Condition:_____

Checked by:_____Replacement Cost_____

Description of Item:_____

Model No:_____

Serial No:_____

Capacity:_____

Name of Mfg:_____

Condition:_____

Checked by:_____Replacement Cost_____

(If Para. 10 is used, use this form)

DEFICIENCY LIST

CONTRACT NUMBER:_____ PROJECT: _____

		DEFICIENCY		CORRECTION		
DEFIC. NO.	DESCRIPTION	DATE OBSERVED	CQC REPORT NO.	DATE CORRECTED	CQC REPORT NO.	COMMENTS

TRANSMITTAL OF SHOP DRAWINGS, EQUIPMENT DATA, MATERIAL SAMPLES, OR MANUFACTURER'S CERTIFICATES OF COMPLIANCE

(Read instructions on the reverse side prior to initiating this form)

DATE	TRANSMITTAL NO.

SECTION I - REQUEST FOR APPROVAL OF THE FOLLOWING ITEMS *(This section will be initiated by the contractor)*

TO:	FROM:	CONTRACT NO.	CHECK ONE: ☐ THIS IS A NEW TRANSMITTAL ☐ THIS IS A RESUBMITTAL OF TRANSMITTAL _____
SPECIFICATION SEC. NO. *(Cover only one section with each transmittal)*	PROJECT TITLE AND LOCATION		

ITEM NO. *a.*	DESCRIPTION OF ITEM SUBMITTED *(Type size, model number/etc.)* *b.*	MFG OR CONTR. CAT., CURVE DRAWING OR BROCHURE NO. *(See instruction no. 8)* *c.*	NO. OF COPIES *d.*	CONTRACT REFERENCE DOCUMENT		FOR CONTRACTOR USE CODE *g.*	VARIATION *(See instruction No. 6)* *h.*	FOR CE USE CODE *i.*
				SPEC. PARA. NO. *e.*	DRAWING SHEET NO. *f.*			

REMARKS

I certify that the above submitted items have been reviewed in detail and are correct and in strict conformance with the contract drawings and specifications except as other wise stated.

_____

NAME AND SIGNATURE OF CONTRACTOR

SECTION II - APPROVAL ACTION

ENCLOSURES RETURNED *(List by Item No.)*	NAME, TITLE AND SIGNATURE OF APPROVING AUTHORITY	DATE

INSTRUCTIONS

1. Section I will be initiated by the Contractor in the required number of copies.

2. Each transmittal shall be numbered consecutively in the space provided for "Transmittal No.". This number, in addition to the contract number, will form a serial number for identifying each submittal. For new submittals or resubmittals mark the appropriate box; on resubmittals, insert transmittal number of last submission as well as the new submittal number.

3. The "Item No." will be the same "Item No." as indicated on ENG FORM 4288 for each entry on this form.

4. Submittals requiring expeditious handling will be submitted on a separate form.

5. Separate transmittal form will be used for submittals under separate sections of the specifications.

6. A check shall be placed in the "Variation" column when a submittal is not in accordance with the plans and specifications--also, a written statement to that effect shall be included in the space provided for "Remarks".

7. Form is self-transmittal, letter of transmittal is not required.

8. When a sample of material or Manufacturer's Certificate of Compliance is transmitted, indicate "Sample" or "Certificate" in column c, Section I.

9. U.S. Army Corps of Engineers approving authority will assign action codes as indicated below in space provided in Section I, column i to each item submitted. In addition they will ensure enclosures are indicated and attached to the form prior to return to the contractor. The Contractor will assign action codes as indicated below in Section I, column g, to each item submitted.

THE FOLLOWING ACTION CODES ARE GIVEN TO ITEMS SUBMITTED

A -- Approved as submitted.

B -- Approved, except as noted on drawings.

C -- Approved, except as noted on drawings. Refer to attached sheet resubmission required.

D -- Will be returned by separate correspondence.

E -- Disapproved (See attached).

F -- Receipt acknowledged.

FX -- Receipt acknowledged, does not comply as noted with contract requirements.

G -- Other *(Specify)*

10. Approval of items does not relieve the contractor from complying with all the requirements of the contract plans and specifications.

GENERAL DECISION NY990020 03/12/99 NY20
General Decision Number NY990020

Superseded General Decision No. NY980020

State: New York

Construction Type:
BUILDING

County(ies):
NIAGARA

BUILDING CONSTRUCTION PROJECTS (except single family homes and apartments up to and including 4 stories),

Modification Number	Publication Date
0	03/12/1999

COUNTY(ies):
NIAGARA

BRNY0045D 07/01/1998

	Rates	Fringes
BRICKLAYERS, STONE MASONS, AND CEMENT MASONS	22.22	10.30
MARBLE MASON	21.89	10.30
TILE LAYERS, TERRAZZO WORKER	21.79	10.30
POINTER, CLEANER & CAULKER	21.72	10.30

CARP0009P 05/15/1998

	Rates	Fringes
NORTH TONAWANDA		
CARPENTERS (Including drywall hangers and acoustical ceiling):		
Carpenters, Millwrights, Pile-drivermen and Soft Floor Layers	22.33	11.62

CARP0280E 07/01/1995

	Rates	Fringes
REMAINDER OF COUNTY		
CARPENTERS (Including (Drywall Hangers and acoustical ceiling):		
Carpenters and Soft Flor Layers	20.79	11.90
Millwrights	20.89	11.90

ELEC0237A 06/01/1998

	Rates	Fringes
ELECTRICIANS:		

Electricians	22.75	11.13+3%
Cable Splicers	25.03	11.13+3%

ELEV0014A

ELEV0014A 07/01/1998

	Rates	Fringes
ELEVATOR CONSTRUCTION:		
MECHANIC	25.795	6.405+a

FOOTNOTE:
a. New Years Day, Memorial Day, Independence Day, Labor Day, Thanksgiving Day, Christmas Day, and the Day after Thanksgiving plus 6% Men under 5 years based on regular hourly rate for all hours worked 8% Men over 5 years based on regular houly rate for all hours worked

---

ENGI0463M 07/01/1998

	Rates	Fringes
POWER EQUIPMENT OPERATORS:		
BACKHOE OPERATORS	21.12	13.85

IRON0009P 07/01/1998

	Rates	Fringes
IRONWORKERS:		
IRONWORKER	22.80	11.43
SHEETER	25.08	11.43

LABO0091M 07/01/1998

	Rates	Fringes
EXCEPT THE CITY OF NORTH TONAWANDA		
LABORERS:		
GROUP 1	18.65	13.69+a
GROUP 2	20.52	13.69+a
GROUP 3	19.65	13.69+a
GROUP 4	19.50	13.69+a
GROUP 5	19.25	13.69+a
GROUP 6	19.15	13.69+a
GROUP 7	18.95	13.69+a
GROUP 8	20.65	13.69+a
GROUP 9	23.65	13.69+a
GROUP 10	16.74	13.69+a

LABORER CLASSIFICATIONS

GROUP 1: Common Laborers

GROUP 2: Blasters

GROUP 3: Wagon Drill-Airtrack

GROUP 4: Laser Beam Operator

GROUP 5: Road Finisher, Form Setter, Gunnite Nozzleman, Sandblasters, Burning Torch, Concrete Saw Operators

GROUP 6: Video Machine Operator in inspection of Pipe

GROUP 7: Potman, Pipelayers, Pavement Breakers or Busters, jackhammer operators; barco rammers; chain saw; powder monkey; black top rakers; scalers; drill tenders; mortar mixers; men working from swinging scaffold bosum chair; suspended cage or bucket; work in caissons below 8 feet; concrete motor buggy; all other operators of mechanical tools, including vibrators regardless of type of power.

GROUP 8: The removal of asbestos from roofs, ceilings, pipes, walls, boilers, columns and all other non-mechanical structures and surfaces. Any portion of work involving the removal and/or handling of hazardous or toxic materials and/or in areas where monitoring is required as a result of the presence of hazardous or toxic materials, all of which are defined as such in the bidding documents and specifications so as to require protective clothing.

GROUP 9: Use of supplied air respirators

GROUP 10: Railway maintenance work

FOOTNOTE:
a. PAID HOLIDAYS: Memorial Day, Labor Day, Thanksgiving Day

LABO0210M 07/01/1998

	Rates	Fringes
CITY OF NORTH TONAWANDA		
LABORERS:		
GROUP 1	17.65	10.60
GROUP 2	17.73	10.60
GROUP 3	17.75	10.60
GROUP 4	17.80	10.60
GROUP 5	17.82	10.60
GROUP 6	17.85	10.60
GROUP 7	17.90	10.60
GROUP 8	17.93	10.60
GROUP 9	18.25	10.60
GROUP 10	18.58	10.60
GROUP 11	18.65	10.60
GROUP 12	19.65	10.60

LABORER CLASSIFICATIONS

GROUP 1: Laborers; topmen; wreckers
GROUP 2: Asphalt shovelers

GROUP 3: Foundation laborers (over 8ft. in depth); hod carriers plasterer tender; plasterer scaffold builders; scaffold builders; pneumatic, gas, electric tool operator (including all forms of busters, jackhammers and chipping guns); steel burners.
GROUP 4: Mortar mixer
GROUP 5: Asphalt smoothers
GROUP 6: Pneumatic gas, tool operator including all form of busters, jackhammers and chipping guns over 8 ft. in depth
GROUP 7: Workers on any swing scaffold; blaster; plumbing laborers; wagon drill operator, bottom man (caisson & cofferdam)
GROUP 8: Asphalt rakers and asphalt screed man
GROUP 9: Stone Cutter
GROUP 10: Curb Setter, flay layers
GROUP 11: Hazardous waste removal

PAIN0004B 05/01/1998

	Rates	Fringes
TOWNSHIPS OF HARTLAND, LOCKPORT NORTH TONAWANDA, NEWFANE, PENDLETON, ROYALTON, SOMERSET and the eastern halves of CAMBRIA and WILSON		
PAINTERS		
BRUSH & ROLLER	19.25	10.43
DRYWALL/TAPING	19.75	10.43
WALLCOVERING	19.50	10.43
GLAZIERS	19.97	7.37

PAIN0004E 06/01/1998

	Rates	Fringes
TOWNSHIPS OF LEWISTON, NIAGARA FALLS, PORTER, WHEATFIELD and the western halves of CAMBRIA and WILSON		
PAINTERS		
Painters	19.00	9.80
Tapers	19.25	9.80
Spraying, Paperhangers, Sand-Blasting, Swinging scaffold	20.00	9.80
Lead Abatement	21.85	9.80

PLAS0111P 07/01/1998

	Rates	Fringes
CEMENT FINISHERS	24.24	9.10

PLUM0129A 06/01/1993

	Rates	Fringes
PLUMBERS & STEAMFITTERS	22.99	8.01

ROOF0074A 06/01/1992

	Rates	Fringes
ROOFERS:		
SLATE & TILE	18.60	4.75
COMPOSITION	18.45	4.75

SFNY0703P 06/01/1997

	Rates	Fringes
SPPRINKLER FITTERS	21.00	8.85

SHEE0071M 05/18/1998

	Rates	Fringes
SHEET METAL WORKER	22.50	9.11

SUNY1002A 12/09/1992

	Rates	Fringes
CARPENTERS:		
DRYWALL FINISHERS	10.00	

WELDERS - Receive rate prescribed for craft performing operation to which welding is incidental.

==========

Unlisted classifications needed for work not included within the scope of the classifications listed may be added after award only as provided in the labor standards contract clauses (29 CFR 5.5(a)(1)(v)).

WAGE DETERMINATION APPEALS PROCESS

1.) Has there been an initial decision in the matter? This can be:

* an existing published wage determination
* a survey underlying a wage determination
* a Wage and Hour Division letter setting forth a position on a wage determination matter
* a conformance (additional classification and rate) ruling

On survey related matters, initial contact, including requests

for summaries of surveys, should be with the Wage and Hour Regional Office for the area in which the survey was conducted because those Regional Offices have responsibility for the Davis-Bacon survey program. If the response from this initial contact is not satisfactory, then the process described in 2.) and 3.) should be followed.

With regard to any other matter not yet ripe for the formal process described here, initial contact should be with the Branch of Construction Wage Determinations. Write to:

Branch of Construction Wage Determinations
Wage and Hour Division
U. S. Department of Labor
200 Constitution Avenue, N. W.
Washington, D. C. 20210

2.) If the answer to the question in 1.) is yes, then an interested party (those affected by the action) can request review and reconsideration from the Wage and Hour Administrator (See 29 CFR Part 1.8 and 29 CFR Part 7). Write to:

Wage and Hour Administrator
U.S. Department of Labor
200 Constitution Avenue, N. W.
Washington, D. C. 20210

The request should be accompanied by a full statement of the interested party's position and by any information (wage payment data, project description, area practice material, etc.) that the requestor considers relevant to the issue.

3.) If the decision of the Administrator is not favorable, an interested party may appeal directly to the Administrative Review Board (formerly the Wage Appeals Board). Write to:

Administrative Review Board
U. S. Department of Labor
200 Constitution Avenue, N. W.
Washington, D. C. 20210

4.) All decisions by the Administrative Review Board are final.

END OF GENERAL DECISION

SUBMITTAL REGISTER
(ER 415 1-10)

CONTRACT NO.

TITLE AND LOCATION
CONSOLIDATED MAINTENANCE FACILITY

CONTRACTOR

SPECIFICATION SECTION
00700

ACTIVITY NO. a.	TRANS-MITTAL NO. b.	ITEM NO c.	SPECIFICATION PARAGRAPH NUMBER d.	DESCRIPTION OF ITEM SUBMITTED e.	TYPE OF SUBMITTAL: DATA f.	DRAWINGS g.	INSTRUCTIONS h.	SCHEDULES i.	STATEMENTS j.	REPORTS k.	CERTIFICATES l.	SAMPLES m.	RECORDS n.	O&M MANUALS o.	CLASSI-FICATION: INFORMATION ONLY p.	GOVERNMENT APPROVED q.	REVIEWER r.	CONTRACTOR SCHEDULE DATES: SUBMIT s.	APPROVAL NEEDED BY t.	MATERIAL NEEDED BY u.	CONTRACTOR ACTION: CODE v.	DATE w.	SUBMIT TO GOVERN-MENT x.	GOVERNMENT ACTION: CODE y.	DATE z.	REMARKS aa.
			90.	Accident Prevention Plan					X						X											

SUBMITTAL REGISTER
(ER 415 1-10)

CONTRACT NO.

TITLE AND LOCATION
CONSOLIDATED MAINTENANCE FACILITY

CONTRACTOR

SPECIFICATION SECTION
01200

ACTIVITY NO. a.	TRANS-MITTAL NO. b.	ITEM NO c.	SPECIFICATION PARAGRAPH NUMBER d.	DESCRIPTION OF ITEM SUBMITTED e.	TYPE OF SUBMITTAL: DATA f.	DRAWINGS g.	INSTRUCTIONS h.	SCHEDULES i.	STATEMENTS j.	REPORTS k.	CERTIFICATES l.	SAMPLES m.	RECORDS n.	O&M MANUALS o.	CLASSI-FICATION: INFORMATION ONLY p.	GOVERNMENT APPROVED q.	REVIEWER r.	CONTRACTOR SCHEDULE DATES: SUBMIT s.	APPROVAL NEEDED BY t.	MATERIAL NEEDED BY u.	CONTRACTOR ACTION: CODE v.	DATE w.	SUBMIT TO GOVERN-MENT x.	GOVERNMENT ACTION: CODE y.	DATE z.	REMARKS aa.
			1.8	Warranty Plan					X						X											

SUBMITTAL REGISTER
(ER 415 1-10)

CONTRACT NO.

TITLE AND LOCATION
CONSOLIDATED MAINTENANCE FACILITY

CONTRACTOR

SPECIFICATION SECTION
01356

ACTIVITY NO. a.	TRANS-MITTAL NO. b.	ITEM NO c.	SPECIFICATION PARAGRAPH NUMBER d.	DESCRIPTION OF ITEM SUBMITTED e.	TYPE OF SUBMITTAL: DATA f.	DRAWINGS g.	INSTRUCTIONS h.	SCHEDULES i.	STATEMENTS j.	REPORTS k.	CERTIFICATES l.	SAMPLES m.	RECORDS n.	O&M MANUALS o.	CLASSI-FICATION: INFORMATION ONLY p.	GOVERNMENT APPROVED q.	REVIEWER r.	CONTRACTOR SCHEDULE DATES: SUBMIT s.	APPROVAL NEEDED BY t.	MATERIAL NEEDED BY u.	CONTRACTOR ACTION: CODE v.	DATE w.	SUBMIT TO GOVERN-MENT x.	GOVERNMENT ACTION: CODE y.	DATE z.	REMARKS aa.
			2.1.3	Mill Certificate or Affidavit							X				X											

ENG FORM 4288, Jul 96

SPECSINTACT

SUBMITTAL REGISTER
(ER 415 1-10)

CONTRACT NO.

TITLE AND LOCATION
CONSOLIDATED MAINTENANCE FACILITY

CONTRACTOR

SPECIFICATION SECTION
01410

ACTIVITY NO. a.	TRANS-MITTAL NO. b.	ITEM NO. c.	SPECIFICATION PARAGRAPH NUMBER d.	DESCRIPTION OF ITEM SUBMITTED e.	TYPE OF SUBMITTAL: DATA f.	DRAWINGS g.	INSTRUCTIONS h.	SCHEDULES i.	STATEMENTS j.	REPORTS k.	CERTIFICATES l.	SAMPLES m.	RECORDS n.	O&M MANUALS o.	CLASSI-FICATION: INFORMATION ONLY p.	GOVERNMENT APPROVED q.	REVIEWER r.	CONTRACTOR SCHEDULE DATES: SUBMIT s.	APPROVAL NEEDED BY t.	MATERIAL NEEDED BY u.	CONTRACTOR ACTION: CODE v.	DATE w.	SUBMIT TO GOVERN-MENT x.	GOVERNMENT ACTION: CODE y.	DATE z.	REMARKS aa.
			1.2.2	Environmental Protection Plan					X						X											

SUBMITTAL REGISTER
(ER 415 1-10)

CONTRACT NO.

TITLE AND LOCATION
CONSOLIDATED MAINTENANCE FACILITY

CONTRACTOR

SPECIFICATION SECTION
01451

ACTIVITY NO. a.	TRANS-MITTAL NO. b.	ITEM NO. c.	SPECIFICATION PARAGRAPH NUMBER d.	DESCRIPTION OF ITEM SUBMITTED e.	TYPE OF SUBMITTAL: DATA f.	DRAWINGS g.	INSTRUCTIONS h.	SCHEDULES i.	STATEMENTS j.	REPORTS k.	CERTIFICATES l.	SAMPLES m.	RECORDS n.	O&M MANUALS o.	CLASSI-FICATION: INFORMATION ONLY p.	GOVERNMENT APPROVED q.	REVIEWER r.	CONTRACTOR SCHEDULE DATES: SUBMIT s.	APPROVAL NEEDED BY t.	MATERIAL NEEDED BY u.	CONTRACTOR ACTION: CODE v.	DATE w.	SUBMIT TO GOVERN-MENT x.	GOVERNMENT ACTION: CODE y.	DATE z.	REMARKS aa.
			3.2.1	Contractor Quality Control (CQC)					X						X											
				Plan																						

SUBMITTAL REGISTER
(ER 415 1-10)

CONTRACT NO.

TITLE AND LOCATION
CONSOLIDATED MAINTENANCE FACILITY

CONTRACTOR

SPECIFICATION SECTION
02050

ACTIVITY NO. a.	TRANS-MITTAL NO. b.	ITEM NO c.	SPECIFICATION PARAGRAPH NUMBER d.	DESCRIPTION OF ITEM SUBMITTED e.	TYPE OF SUBMITTAL: DATA f.	DRAWINGS g.	INSTRUCTIONS h.	SCHEDULES i.	STATEMENTS j.	REPORTS k.	CERTIFICATES l.	SAMPLES m.	RECORDS n.	O&M MANUALS o.	CLASSI-FICATION: INFORMATION ONLY p.	GOVERNMENT APPROVED q.	REVIEWER r.	CONTRACTOR SCHEDULE DATES: SUBMIT s.	APPROVAL NEEDED BY t.	MATERIAL NEEDED BY u.	CONTRACTOR ACTION: CODE v.	DATE w.	SUBMIT TO GOVERN-MENT x.	GOVERNMENT ACTION: CODE y.	DATE z.	REMARKS aa.
			1.3	Work Plan					X							X										

SUBMITTAL REGISTER
(ER 415 1-10)

CONTRACT NO.

TITLE AND LOCATION
CONSOLIDATED MAINTENANCE FACILITY

CONTRACTOR

SPECIFICATION SECTION
02080

ACTIVITY NO. a.	TRANS-MITTAL NO. b.	ITEM NO. c.	SPECIFICATION PARAGRAPH NUMBER d.	DESCRIPTION OF ITEM SUBMITTED e.	TYPE OF SUBMITTAL: DATA f.	DRAWINGS g.	INSTRUCTIONS h.	SCHEDULES i.	STATEMENTS j.	REPORTS k.	CERTIFICATES l.	SAMPLES m.	RECORDS n.	O&M MANUALS o.	CLASSIFICATION: INFORMATION ONLY p.	GOVERNMENT APPROVED q.	REVIEWER r.	CONTRACTOR SCHEDULE DATES: SUBMIT s.	APPROVAL NEEDED BY t.	MATERIAL NEEDED BY u.	CONTRACTOR ACTION: CODE v.	DATE w.	SUBMIT TO GOVERN-MENT x.	GOVERNMENT ACTION: CODE y.	DATE z.	REMARKS aa.
			1.4	Materials and Equipment	X										X											
			1.4	Site Layout		X										X										
			1.5	Qualifications					X							X										
			1.4	Training Program					X						X											
			1.10	Medical Requirements					X						X											
			2.1	Encapsulants					X							X										
			1.7	Accident Prevention Plan					X						X											
			1.7	Asbestos Hazard Abatement Plan					X						X											
			1.7	Activity Hazard Analyses					X						X											
			1.4	Exposure Assessment and Air						X						X										
				Monitoring																						
			1.4	Local Exhaust Ventilation						X					X											
			1.4	Insurance						X						X										
			1.14	Licenses, Permits and Notifications						X						X										
			1.4	Vacuum, Filtration and Ventilation							X				X											
				Equipment																						
			1.4	Respiratory Protection Program									X			X										
			3.11	Cleanup and Disposal									X			X										

SUBMITTAL REGISTER
(ER 415 1-10)

CONTRACT NO.

TITLE AND LOCATION
CONSOLIDATED MAINTENANCE FACILITY

CONTRACTOR

SPECIFICATION SECTION
02090

ACTIVITY NO. a.	TRANS-MITTAL NO. b.	ITEM NO. c.	SPECIFICATION PARAGRAPH NUMBER d.	DESCRIPTION OF ITEM SUBMITTED e.	TYPE OF SUBMITTAL: DATA f.	DRAWINGS g.	INSTRUCTIONS h.	SCHEDULES i.	STATEMENTS j.	REPORTS k.	CERTIFICATES l.	SAMPLES m.	RECORDS n.	O&M MANUALS o.	CLASSIFICATION: INFORMATION ONLY p.	GOVERNMENT APPROVED q.	REVIEWER r.	CONTRACTOR SCHEDULE DATES: SUBMIT s.	APPROVAL NEEDED BY t.	MATERIAL NEEDED BY u.	CONTRACTOR ACTION: CODE v.	DATE w.	SUBMIT TO GOVERN-MENT x.	GOVERNMENT ACTION: CODE y.	DATE z.	REMARKS aa.
			1.5	Qualifications of CIH					X						X											
			1.5	Exposure assessment documentation					X						X											
			1.5	Testing laboratory qualifications					X							X										
			1.5	Lead-containing paint demolition plan					X							X										
			1.5	Rental equipment notification					X						X											
			1.5	CIH approval of work plan (signature,					X						X											
				date, and certification number)																						
			1.5	Respiratory protection program					X						X											
			1.5	Hazard communication program					X						X											
			1.5	Certification of medical examinations									X		X											
			1.5	Employee Training Certification									X		X											

SUBMITTAL REGISTER
(ER 415 1-10)

CONTRACT NO.

TITLE AND LOCATION
CONSOLIDATED MAINTENANCE FACILITY

CONTRACTOR

SPECIFICATION SECTION
02120

ACTIVITY NO. a.	TRANS-MITTAL NO. b.	ITEM NO. c.	SPECIFICATION PARAGRAPH NUMBER d.	DESCRIPTION OF ITEM SUBMITTED e.	TYPE OF SUBMITTAL: DATA f.	DRAWINGS g.	INSTRUCTIONS h.	SCHEDULES i.	STATEMENTS j.	REPORTS k.	CERTIFICATES l.	SAMPLES m.	RECORDS n.	O&M MANUALS o.	CLASSIFICATION: INFORMATION ONLY p.	GOVERNMENT APPROVED q.	REVIEWER r.	CONTRACTOR SCHEDULE DATES: SUBMIT s.	APPROVAL NEEDED BY t.	MATERIAL NEEDED BY u.	CONTRACTOR ACTION: CODE v.	DATE w.	SUBMIT TO GOVERN-MENT x.	GOVERNMENT ACTION: CODE y.	DATE z.	REMARKS aa.
			3.1	On-site Hazardous Waste	X											X										
				Management																						
			3.2	Off-site Hazardous Waste	X											X										
				Management																						
			3.7	Recordkeeping						X						X										
			3.8	Spill Response						X					X											
			1.2	Exception Reports						X						X										
			1.3	Qualifications							X				X											
			1.2	Off-Site Policy Compliance							X				X											
				Certification																						
			1.2	Certificates of Disposal							X				X											
			3.2.3	Packagings Certification							X					X										
			1.2	Notices of Non-Compliance and									X		X											
				Notices of Violation																						

SUBMITTAL REGISTER
(ER 415 1-10)

CONTRACT NO.

TITLE AND LOCATION
CONSOLIDATED MAINTENANCE FACILITY

CONTRACTOR

SPECIFICATION SECTION
02221

ACTIVITY NO. a.	TRANS-MITTAL NO. b.	ITEM NO c.	SPECIFICATION PARAGRAPH NUMBER d.	DESCRIPTION OF ITEM SUBMITTED e.	TYPE OF SUBMITTAL: DATA f.	DRAWINGS g.	INSTRUCTIONS h.	SCHEDULES i.	STATEMENTS j.	REPORTS k.	CERTIFICATES l.	SAMPLES m.	RECORDS n.	O&M MANUALS o.	CLASSI-FICATION: INFORMATION ONLY p.	GOVERNMENT APPROVED q.	REVIEWER r.	CONTRACTOR SCHEDULE DATES: SUBMIT s.	APPROVAL NEEDED BY t.	MATERIAL NEEDED BY u.	CONTRACTOR ACTION: CODE v.	DATE w.	SUBMIT TO GOVERN-MENT x.	GOVERNMENT ACTION: CODE y.	DATE z.	REMARKS aa.
			1.3	Field Density Tests						X					X											
			1.3	Testing of Backfill Materials						X					X											

SUBMITTAL REGISTER
(ER 415 1-10)

CONTRACT NO.

TITLE AND LOCATION
CONSOLIDATED MAINTENANCE FACILITY

CONTRACTOR

SPECIFICATION SECTION
02225

ACTIVITY NO. a.	TRANS-MITTAL NO. b.	ITEM NO c.	SPECIFICATION PARAGRAPH NUMBER d.	DESCRIPTION OF ITEM SUBMITTED e.	TYPE OF SUBMITTAL: DATA f.	DRAWINGS g.	INSTRUCTIONS h.	SCHEDULES i.	STATEMENTS j.	REPORTS k.	CERTIFICATES l.	SAMPLES m.	RECORDS n.	O&M MANUALS o.	CLASSI-FICATION: INFORMATION ONLY p.	GOVERNMENT APPROVED q.	REVIEWER r.	CONTRACTOR SCHEDULE DATES: SUBMIT s.	APPROVAL NEEDED BY t.	MATERIAL NEEDED BY u.	CONTRACTOR ACTION: CODE v.	DATE w.	SUBMIT TO GOVERN-MENT x.	GOVERNMENT ACTION: CODE y.	DATE z.	REMARKS aa.
			1.5	Earthwork					X							X										
			3.13	Testing						X					X											
			3.13	Testing							X				X											

SUBMITTAL REGISTER
(ER 415 1-10)

CONTRACT NO.

TITLE AND LOCATION
CONSOLIDATED MAINTENANCE FACILITY

CONTRACTOR

SPECIFICATION SECTION
02233

ACTIVITY NO. a.	TRANS-MITTAL NO. b.	ITEM NO c.	SPECIFICATION PARAGRAPH NUMBER d.	DESCRIPTION OF ITEM SUBMITTED e.	TYPE OF SUBMITTAL: DATA f.	DRAWINGS g.	INSTRUCTIONS h.	SCHEDULES i.	STATEMENTS j.	REPORTS k.	CERTIFICATES l.	SAMPLES m.	RECORDS n.	O&M MANUALS o.	CLASSIFICATION: INFORMATION ONLY p.	GOVERNMENT APPROVED q.	REVIEWER r.	CONTRACTOR SCHEDULE DATES: SUBMIT s.	APPROVAL NEEDED BY t.	MATERIAL NEEDED BY u.	CONTRACTOR ACTION: CODE v.	DATE w.	SUBMIT TO GOVERN-MENT x.	GOVERNMENT ACTION: CODE y.	DATE z.	REMARKS aa.
			1.7	Sampling and testing						X						X										
			1.4	Waybills and Delivery Tickets						X					X											

SUBMITTAL REGISTER
(ER 415 1-10)

CONTRACT NO.

TITLE AND LOCATION
CONSOLIDATED MAINTENANCE FACILITY

CONTRACTOR

SPECIFICATION SECTION
02316

ACTIVITY NO. a.	TRANS-MITTAL NO. b.	ITEM NO. c.	SPECIFICATION PARAGRAPH NUMBER d.	DESCRIPTION OF ITEM SUBMITTED e.	TYPE OF SUBMITTAL: DATA f.	DRAWINGS g.	INSTRUCTIONS h.	SCHEDULES i.	STATEMENTS j.	REPORTS k.	CERTIFICATES l.	SAMPLES m.	RECORDS n.	O&M MANUALS o.	CLASSI-FICATION: INFORMATION ONLY p.	GOVERNMENT APPROVED q.	REVIEWER r.	CONTRACTOR SCHEDULE DATES: SUBMIT s.	APPROVAL NEEDED BY t.	MATERIAL NEEDED BY u.	CONTRACTOR ACTION: CODE v.	DATE w.	SUBMIT TO GOVERN-MENT x.	GOVERNMENT ACTION: CODE y.	DATE z.	REMARKS aa.
			3.4.3	Field Density Tests						X					X											
			3.4.2	Testing of Backfill Materials						X					X											

SUBMITTAL REGISTER
(ER 415 1-10)

CONTRACT NO.

TITLE AND LOCATION
CONSOLIDATED MAINTENANCE FACILITY

CONTRACTOR

SPECIFICATION SECTION
02511

ACTIVITY NO. a.	TRANS-MITTAL NO. b.	ITEM NO c.	SPECIFICATION PARAGRAPH NUMBER d.	DESCRIPTION OF ITEM SUBMITTED e.	TYPE OF SUBMITTAL: DATA f.	DRAWINGS g.	INSTRUCTIONS h.	SCHEDULES i.	STATEMENTS j.	REPORTS k.	CERTIFICATES l.	SAMPLES m.	RECORDS n.	O&M MANUALS o.	CLASSI-FICATION: INFORMATION ONLY p.	GOVERNMENT APPROVED q.	REVIEWER r.	CONTRACTOR SCHEDULE DATES: SUBMIT s.	APPROVAL NEEDED BY t.	MATERIAL NEEDED BY u.	CONTRACTOR ACTION: CODE v.	DATE w.	SUBMIT TO GOVERN-MENT x.	GOVERNMENT ACTION: CODE y.	DATE z.	REMARKS aa.
			3.8	Field Quality Control						X					X											
			2.1	Concrete									X			X										

SUBMITTAL REGISTER
(ER 415 1-10)

CONTRACT NO.

TITLE AND LOCATION
CONSOLIDATED MAINTENANCE FACILITY

CONTRACTOR

SPECIFICATION SECTION
02551

ACTIVITY NO. a.	TRANS-MITTAL NO. b.	ITEM NO. c.	SPECIFICATION PARAGRAPH NUMBER d.	DESCRIPTION OF ITEM SUBMITTED e.	TYPE OF SUBMITTAL: DATA f.	DRAWINGS g.	INSTRUCTIONS h.	SCHEDULES i.	STATEMENTS j.	REPORTS k.	CERTIFICATES l.	SAMPLES m.	RECORDS n.	O&M MANUALS o.	CLASSIFICATION: INFORMATION ONLY p.	GOVERNMENT APPROVED q.	REVIEWER r.	CONTRACTOR SCHEDULE DATES: SUBMIT s.	APPROVAL NEEDED BY t.	MATERIAL NEEDED BY u.	CONTRACTOR ACTION: CODE v.	DATE w.	SUBMIT TO GOVERN-MENT x.	GOVERNMENT ACTION: CODE y.	DATE z.	REMARKS aa.
			1.3	Bituminous Pavement						X						X										
			1.3	Bituminous Pavement								X				X										
			1.12	Waybills and Delivery Tickets								X			X											

SUBMITTAL REGISTER
(ER 415 1-10)

CONTRACT NO.

TITLE AND LOCATION
CONSOLIDATED MAINTENANCE FACILITY

CONTRACTOR

SPECIFICATION SECTION
02558

ACTIVITY NO. a.	TRANS-MITTAL NO. b.	ITEM NO. c.	SPECIFICATION PARAGRAPH NUMBER d.	DESCRIPTION OF ITEM SUBMITTED e.	TYPE OF SUBMITTAL: DATA f.	DRAWINGS g.	INSTRUCTIONS h.	SCHEDULES i.	STATEMENTS j.	REPORTS k.	CERTIFICATES l.	SAMPLES m.	RECORDS n.	O&M MANUALS o.	CLASSI-FICATION: INFORMATION ONLY p.	GOVERNMENT APPROVED q.	REVIEWER r.	CONTRACTOR SCHEDULE DATES: SUBMIT s.	APPROVAL NEEDED BY t.	MATERIAL NEEDED BY u.	CONTRACTOR ACTION: CODE v.	DATE w.	SUBMIT TO GOVERN-MENT x.	GOVERNMENT ACTION: CODE y.	DATE z.	REMARKS aa.
			1.3	Tests						X					X											
			1.3	Waybills and Delivery Tickets									X		X											

SUBMITTAL REGISTER
(ER 415 1-10)

CONTRACT NO.

TITLE AND LOCATION
CONSOLIDATED MAINTENANCE FACILITY

CONTRACTOR

SPECIFICATION SECTION
02580

ACTIVITY NO. a.	TRANS-MITTAL NO. b.	ITEM NO c.	SPECIFICATION PARAGRAPH NUMBER d.	DESCRIPTION OF ITEM SUBMITTED e.	TYPE OF SUBMITTAL: DATA f.	DRAWINGS g.	INSTRUCTIONS h.	SCHEDULES i.	STATEMENTS j.	REPORTS k.	CERTIFICATES l.	SAMPLES m.	RECORDS n.	O&M MANUALS o.	CLASSIFICATION: INFORMATION ONLY p.	GOVERNMENT APPROVED q.	REVIEWER r.	CONTRACTOR SCHEDULE DATES: SUBMIT s.	APPROVAL NEEDED BY t.	MATERIAL NEEDED BY u.	CONTRACTOR ACTION: CODE v.	DATE w.	SUBMIT TO GOVERN-MENT x.	GOVERNMENT ACTION: CODE y.	DATE z.	REMARKS aa.
			1.3	Equipment Lists	X											X										
			1.3	Mixing, Thinning and Application			X								X											
			1.3	Material Tests						X					X											
			1.3	Volatile Organic Compound (VOC)							X				X											
				Content																						

SUBMITTAL REGISTER
(ER 415 1-10)

CONTRACT NO.

TITLE AND LOCATION
CONSOLIDATED MAINTENANCE FACILITY

CONTRACTOR

SPECIFICATION SECTION
02660

ACTIVITY NO. a.	TRANS-MITTAL NO. b.	ITEM NO. c.	SPECIFICATION PARAGRAPH NUMBER d.	DESCRIPTION OF ITEM SUBMITTED e.	TYPE OF SUBMITTAL: DATA f.	DRAWINGS g.	INSTRUCTIONS h.	SCHEDULES i.	STATEMENTS j.	REPORTS k.	CERTIFICATES l.	SAMPLES m.	RECORDS n.	O&M MANUALS o.	CLASSIFICATION: INFORMATION ONLY p.	GOVERNMENT APPROVED q.	REVIEWER r.	CONTRACTOR SCHEDULE DATES: SUBMIT s.	APPROVAL NEEDED BY t.	MATERIAL NEEDED BY u.	CONTRACTOR ACTION: CODE v.	DATE w.	SUBMIT TO GOVERN-MENT x.	GOVERNMENT ACTION: CODE y.	DATE z.	REMARKS aa.
			3.1	Installation			X								X											
			1.5	Waste Water Disposal Method					X						X											
			1.5	Satisfactory Installation					X							X										
			3.3.1	Bacteriological Disinfection						X					X											
			3.1	Installation							X				X											

SUBMITTAL REGISTER
(ER 415 1-10)

CONTRACT NO.

TITLE AND LOCATION
CONSOLIDATED MAINTENANCE FACILITY

CONTRACTOR

SPECIFICATION SECTION
02685

ACTIVITY NO. a.	TRANS-MITTAL NO. b.	ITEM NO. c.	SPECIFICATION PARAGRAPH NUMBER d.	DESCRIPTION OF ITEM SUBMITTED e.	TYPE OF SUBMITTAL: DATA f.	DRAWINGS g.	INSTRUCTIONS h.	SCHEDULES i.	STATEMENTS j.	REPORTS k.	CERTIFICATES l.	SAMPLES m.	RECORDS n.	O&M MANUALS o.	CLASSIFICATION: INFORMATION ONLY p.	GOVERNMENT APPROVED q.	REVIEWER r.	CONTRACTOR SCHEDULE DATES: SUBMIT s.	APPROVAL NEEDED BY t.	MATERIAL NEEDED BY u.	CONTRACTOR ACTION: CODE v.	DATE w.	SUBMIT TO GOVERN-MENT x.	GOVERNMENT ACTION: CODE y.	DATE z.	REMARKS aa.
			2.1	Pipe, Fittings, and Associated		X									X											
				Materials																						
			1.3	Equipment and Materials				X							X											
			1.3	Spare Parts Data				X							X											
			1.3	Notification				X							X											
			1.2.1	Welding Steel Piping					X						X											
			1.2.2	Jointing Polyethylene Piping					X							X										
			1.3	Connection and Abandonment					X							X										
				Procedures																						
			1.3	Utility Work							X				X											
			1.3	Training							X				X											
			1.3	Gas Distribution System										X	X											

SUBMITTAL REGISTER
(ER 415 1-10)

CONTRACT NO.

TITLE AND LOCATION
CONSOLIDATED MAINTENANCE FACILITY

CONTRACTOR

SPECIFICATION SECTION
02714

ACTIVITY NO. a.	TRANS-MITTAL NO. b.	ITEM NO c.	SPECIFICATION PARAGRAPH NUMBER d.	DESCRIPTION OF ITEM SUBMITTED e.	TYPE OF SUBMITTAL: DATA f.	DRAWINGS g.	INSTRUCTIONS h.	SCHEDULES i.	STATEMENTS j.	REPORTS k.	CERTIFICATES l.	SAMPLES m.	RECORDS n.	O&M MANUALS o.	CLASSIFICATION: INFORMATION ONLY p.	GOVERNMENT APPROVED q.	REVIEWER r.	CONTRACTOR SCHEDULE DATES: SUBMIT s.	APPROVAL NEEDED BY t.	MATERIAL NEEDED BY u.	CONTRACTOR ACTION: CODE v.	DATE w.	SUBMIT TO GOVERN-MENT x.	GOVERNMENT ACTION: CODE y.	DATE z.	REMARKS aa.
			1.8	Sampling and Testing						X						X										
			1.8.5	Approval of Materials						X						X										
			3.2.7	Evaluation						X						X										
			1.4	Waybills and Delivery Tickets									X		X											

SUBMITTAL REGISTER
(ER 415 1-10)

CONTRACT NO.

TITLE AND LOCATION
CONSOLIDATED MAINTENANCE FACILITY

CONTRACTOR

SPECIFICATION SECTION
02720

ACTIVITY NO. a.	TRANS-MITTAL NO. b.	ITEM NO. c.	SPECIFICATION PARAGRAPH NUMBER d.	DESCRIPTION OF ITEM SUBMITTED e.	TYPE OF SUBMITTAL: DATA f.	DRAWINGS g.	INSTRUCTIONS h.	SCHEDULES i.	STATEMENTS j.	REPORTS k.	CERTIFICATES l.	SAMPLES m.	RECORDS n.	O&M MANUALS o.	CLASSIFICATION: INFORMATION ONLY p.	GOVERNMENT APPROVED q.	REVIEWER r.	CONTRACTOR SCHEDULE DATES: SUBMIT s.	APPROVAL NEEDED BY t.	MATERIAL NEEDED BY u.	CONTRACTOR ACTION: CODE v.	DATE w.	SUBMIT TO GOVERN-MENT x.	GOVERNMENT ACTION: CODE y.	DATE z.	REMARKS aa.
			3.3	Placing Pipe			X								X											
			3.8	Pipeline Testing							X					X										
			2.6	Hydrostatic Test on Watertight Joints							X					X										
			3.7.5	Determination of Density							X					X										
			2.3.7	Frame and Cover for Gratings							X					X										
			2.1	Pipe for Culverts and Storm Drains								X			X											

SUBMITTAL REGISTER
(ER 415 1-10)

CONTRACT NO.

TITLE AND LOCATION
CONSOLIDATED MAINTENANCE FACILITY

CONTRACTOR

SPECIFICATION SECTION
02730

ACTIVITY NO. a.	TRANS-MITTAL NO. b.	ITEM NO c.	SPECIFICATION PARAGRAPH NUMBER d.	DESCRIPTION OF ITEM SUBMITTED e.	TYPE OF SUBMITTAL: DATA f.	DRAWINGS g.	INSTRUCTIONS h.	SCHEDULES i.	STATEMENTS j.	REPORTS k.	CERTIFICATES l.	SAMPLES m.	RECORDS n.	O&M MANUALS o.	CLASSI-FICATION: INFORMATION ONLY p.	GOVERNMENT APPROVED q.	REVIEWER r.	CONTRACTOR SCHEDULE DATES: SUBMIT s.	APPROVAL NEEDED BY t.	MATERIAL NEEDED BY u.	CONTRACTOR ACTION: CODE v.	DATE w.	SUBMIT TO GOVERN-MENT x.	GOVERNMENT ACTION: CODE y.	DATE z.	REMARKS aa.
			1.4	Portland Cement							X				X											

ENG FORM 4288, Jul 96

SPECSINTACT

SUBMITTAL REGISTER
(ER 415 1-10)

CONTRACT NO.

TITLE AND LOCATION
CONSOLIDATED MAINTENANCE FACILITY

CONTRACTOR

SPECIFICATION SECTION
02754

ACTIVITY NO. a.	TRANS-MITTAL NO. b.	ITEM NO. c.	SPECIFICATION PARAGRAPH NUMBER d.	DESCRIPTION OF ITEM SUBMITTED e.	TYPE OF SUBMITTAL: DATA f.	DRAWINGS g.	INSTRUCTIONS h.	SCHEDULES i.	STATEMENTS j.	REPORTS k.	CERTIFICATES l.	SAMPLES m.	RECORDS n.	O&M MANUALS o.	CLASSIFICATION: INFORMATION ONLY p.	GOVERNMENT APPROVED q.	REVIEWER r.	CONTRACTOR SCHEDULE DATES: SUBMIT s.	APPROVAL NEEDED BY t.	MATERIAL NEEDED BY u.	CONTRACTOR ACTION: CODE v.	DATE w.	SUBMIT TO GOVERN-MENT x.	GOVERNMENT ACTION: CODE y.	DATE z.	REMARKS aa.
			1.7	Equipment	X										X											
			3.4	Paving				X							X											
			2.11	Mixture Proportions					X							X										

SUBMITTAL REGISTER
(ER 415 1-10)

CONTRACT NO.

TITLE AND LOCATION
CONSOLIDATED MAINTENANCE FACILITY

CONTRACTOR

SPECIFICATION SECTION
02821

ACTIVITY NO. a.	TRANS-MITTAL NO. b.	ITEM NO c.	SPECIFICATION PARAGRAPH NUMBER d.	DESCRIPTION OF ITEM SUBMITTED e.	TYPE OF SUBMITTAL: DATA f.	DRAWINGS g.	INSTRUCTIONS h.	SCHEDULES i.	STATEMENTS j.	REPORTS k.	CERTIFICATES l.	SAMPLES m.	RECORDS n.	O&M MANUALS o.	CLASSI-FICATION: INFORMATION ONLY p.	GOVERNMENT APPROVED q.	REVIEWER r.	CONTRACTOR SCHEDULE DATES: SUBMIT s.	APPROVAL NEEDED BY t.	MATERIAL NEEDED BY u.	CONTRACTOR ACTION: CODE v.	DATE w.	SUBMIT TO GOVERN-MENT x.	GOVERNMENT ACTION: CODE y.	DATE z.	REMARKS aa.
			1.2	Chain Link Fence							X				X											

SUBMITTAL REGISTER
(ER 415 1-10)

CONTRACT NO.

TITLE AND LOCATION
CONSOLIDATED MAINTENANCE FACILITY

CONTRACTOR

SPECIFICATION SECTION
02935

ACTIVITY NO. a.	TRANS-MITTAL NO. b.	ITEM NO. c.	SPECIFICATION PARAGRAPH NUMBER d.	DESCRIPTION OF ITEM SUBMITTED e.	TYPE OF SUBMITTAL: DATA f.	DRAWINGS g.	INSTRUCTIONS h.	SCHEDULES i.	STATEMENTS j.	REPORTS k.	CERTIFICATES l.	SAMPLES m.	RECORDS n.	O&M MANUALS o.	CLASSIFICATION: INFORMATION ONLY p.	GOVERNMENT APPROVED q.	REVIEWER r.	CONTRACTOR SCHEDULE DATES: SUBMIT s.	APPROVAL NEEDED BY t.	MATERIAL NEEDED BY u.	CONTRACTOR ACTION: CODE v.	DATE w.	SUBMIT TO GOVERN-MENT x.	GOVERNMENT ACTION: CODE y.	DATE z.	REMARKS aa.
			1.2	Manufacturer's Literature	X										X											
			1.2	Equipment List				X							X											
			1.4.1	Delivery					X						X											
			3.7	Application of Pesticide					X						X											
			3.10.3.7	Maintenance Report					X						X											
			3.10	Turf Establishment Period					X						X											
			1.2	Seed							X				X		FIO									
			1.2	Fertilizer							X				X											
			1.2	Agricultural Limestone							X				X											
			1.2	Peat							X				X											
			1.2	Asphalt Adhesive							X				X											
			1.2	Pesticide Material							X				X											
			1.2	Topsoil							X				X											

SUBMITTAL REGISTER
(ER 415 1-10)

CONTRACT NO.

TITLE AND LOCATION
CONSOLIDATED MAINTENANCE FACILITY

CONTRACTOR

SPECIFICATION SECTION
03250

ACTIVITY NO. a.	TRANS-MITTAL NO. b.	ITEM NO c.	SPECIFICATION PARAGRAPH NUMBER d.	DESCRIPTION OF ITEM SUBMITTED e.	TYPE OF SUBMITTAL: DATA f.	DRAWINGS g.	INSTRUCTIONS h.	SCHEDULES i.	STATEMENTS j.	REPORTS k.	CERTIFICATES l.	SAMPLES m.	RECORDS n.	O&M MANUALS o.	CLASSI-FICATION: INFORMATION ONLY p.	GOVERNMENT APPROVED q.	REVIEWER r.	CONTRACTOR SCHEDULE DATES: SUBMIT s.	APPROVAL NEEDED BY t.	MATERIAL NEEDED BY u.	CONTRACTOR ACTION: CODE v.	DATE w.	SUBMIT TO GOVERN-MENT x.	GOVERNMENT ACTION: CODE y.	DATE z.	REMARKS aa.
			1.2	Sealant							X															
			1.2	Sealant							X															
			2.3	Sealant							X															
			1.2	Waterstops							X															
			1.2	Waterstops							X															
			2.4	Waterstops							X															

SUBMITTAL REGISTER
(ER 415 1-10)

CONTRACT NO.

TITLE AND LOCATION
CONSOLIDATED MAINTENANCE FACILITY

CONTRACTOR

SPECIFICATION SECTION
04200

ACTIVITY NO. a.	TRANS-MITTAL NO. b.	ITEM NO. c.	SPECIFICATION PARAGRAPH NUMBER d.	DESCRIPTION OF ITEM SUBMITTED e.	TYPE OF SUBMITTAL: DATA f.	DRAWINGS g.	INSTRUCTIONS h.	SCHEDULES i.	STATEMENTS j.	REPORTS k.	CERTIFICATES l.	SAMPLES m.	RECORDS n.	O&M MANUALS o.	CLASSIFICATION: INFORMATION ONLY p.	GOVERNMENT APPROVED q.	REVIEWER r.	CONTRACTOR SCHEDULE DATES: SUBMIT s.	APPROVAL NEEDED BY t.	MATERIAL NEEDED BY u.	CONTRACTOR ACTION: CODE v.	DATE w.	SUBMIT TO GOVERN-MENT x.	GOVERNMENT ACTION: CODE y.	DATE z.	REMARKS aa.
			2.2	Clay or Shale Brick	X											X										
			2.3	Concrete Brick	X											X										
			2.17	Insulation	X											X										
			1.2	Masonry Work		X										X										
			3.1.2	Cold Weather Installation					X							X										
			3.26.3	Efflorescence Test						X						X										
			3.26.1	Field Testing of Mortar						X						X										
			3.26.2	Field Testing of Grout						X						X										
			3.26.4	Prism tests						X						X										
			1.2	Masonry Cement						X						X										
			2.4.3	Fire-rated CMU						X						X										
			1.5	Special Inspection						X						X										
			2.2	Clay or Shale Brick							X															
			1.2	FI0							X															
			2.3	Concrete Brick							X				X											
			2.4	Concrete Masonry Units (CMU)							X				X											
			2.15	Control Joint Keys							X				X											
			2.12	Anchors, Ties, and Bar Positioners							X				X											
			2.16	Expansion-Joint Materials							X				X											
			2.13	Joint Reinforcement							X				X											
			2.14	Reinforcing Steel Bars and Rods							X				X											
			1.2	Masonry Cement							X				X											
			1.2	Mortar Coloring							X				X											
			2.17	Insulation							X				X		GA									
			2.17	Insulation							X				X		GA									
			2.8	Precast Concrete Items							X				X											
			1.2	Mortar Admixtures							X				X											
			1.2	Grout Admixtures							X				X											
			2.4	Concrete Masonry Units (CMU)								X				X										

SUBMITTAL REGISTER
(ER 415 1-10)

CONTRACT NO.

TITLE AND LOCATION
CONSOLIDATED MAINTENANCE FACILITY

CONTRACTOR

SPECIFICATION SECTION
04200

ACTIVITY NO. a.	TRANS-MITTAL NO. b.	ITEM NO. c.	SPECIFICATION PARAGRAPH NUMBER d.	DESCRIPTION OF ITEM SUBMITTED e.	TYPE OF SUBMITTAL: DATA f.	DRAWINGS g.	INSTRUCTIONS h.	SCHEDULES i.	STATEMENTS j.	REPORTS k.	CERTIFICATES l.	SAMPLES m.	RECORDS n.	O&M MANUALS o.	CLASSIFICATION: INFORMATION ONLY p.	GOVERNMENT APPROVED q.	REVIEWER r.	CONTRACTOR SCHEDULE DATES: SUBMIT s.	APPROVAL NEEDED BY t.	MATERIAL NEEDED BY u.	CONTRACTOR ACTION: CODE v.	DATE w.	SUBMIT TO GOVERN-MENT x.	GOVERNMENT ACTION: CODE y.	DATE z.	REMARKS aa.
			2.3	Concrete Brick								X				X										
			1.2	Stone Items								X				X										
			2.2	Clay or Shale Brick								X				X										
			2.12	Anchors, Ties, and Bar Positioners								X				X										
			1.2	Expansion-Joint Material								X				X										
			2.13	Joint Reinforcement								X				X										
			2.17	Insulation								X				X										
			1.2	Portable Panel								X				X										

SUBMITTAL REGISTER
(ER 415 1-10)

CONTRACT NO.

TITLE AND LOCATION
CONSOLIDATED MAINTENANCE FACILITY

CONTRACTOR

SPECIFICATION SECTION
05300

ACTIVITY NO. a.	TRANS-MITTAL NO. b.	ITEM NO. c.	SPECIFICATION PARAGRAPH NUMBER d.	DESCRIPTION OF ITEM SUBMITTED e.	TYPE OF SUBMITTAL: DATA f.	DRAWINGS g.	INSTRUCTIONS h.	SCHEDULES i.	STATEMENTS j.	REPORTS k.	CERTIFICATES l.	SAMPLES m.	RECORDS n.	O&M MANUALS o.	CLASSI-FICATION: INFORMATION ONLY p.	GOVERNMENT APPROVED q.	REVIEWER r.	CONTRACTOR SCHEDULE DATES: SUBMIT s.	APPROVAL NEEDED BY t.	MATERIAL NEEDED BY u.	CONTRACTOR ACTION: CODE v.	DATE w.	SUBMIT TO GOVERN-MENT x.	GOVERNMENT ACTION: CODE y.	DATE z.	REMARKS aa.
			1.2	Deck Units		X																				
			1.2	Deck Units		X																				
			2.1	Deck Units		X																				
			2.1	Deck Units		X																				
			2.5	Accessories		X																				
			3.3	Attachments		X																				
			3.3	Attachments		X																				
			3.3	Attachments		X																				
			3.4	Holes and Openings		X																				
			1.2	Certificates		X																				
			1.2	Statements		X																				

SUBMITTAL REGISTER
(ER 415 1-10)

CONTRACT NO.

TITLE AND LOCATION
CONSOLIDATED MAINTENANCE FACILITY

CONTRACTOR

SPECIFICATION SECTION
05500

ACTIVITY NO. a.	TRANS-MITTAL NO. b.	ITEM NO c.	SPECIFICATION PARAGRAPH NUMBER d.	DESCRIPTION OF ITEM SUBMITTED e.	TYPE OF SUBMITTAL: DATA f.	DRAWINGS g.	INSTRUCTIONS h.	SCHEDULES i.	STATEMENTS j.	REPORTS k.	CERTIFICATES l.	SAMPLES m.	RECORDS n.	O&M MANUALS o.	CLASSIFICATION: INFORMATION ONLY p.	GOVERNMENT APPROVED q.	REVIEWER r.	CONTRACTOR SCHEDULE DATES: SUBMIT s.	APPROVAL NEEDED BY t.	MATERIAL NEEDED BY u.	CONTRACTOR ACTION: CODE v.	DATE w.	SUBMIT TO GOVERN-MENT x.	GOVERNMENT ACTION: CODE y.	DATE z.	REMARKS aa.
			1.2	Miscellaneous Metal Items		X										X										

SUBMITTAL REGISTER
(ER 415 1-10)

CONTRACT NO.

TITLE AND LOCATION
CONSOLIDATED MAINTENANCE FACILITY

CONTRACTOR

SPECIFICATION SECTION
06100

ACTIVITY NO. a.	TRANS-MITTAL NO. b.	ITEM NO c.	SPECIFICATION PARAGRAPH NUMBER d.	DESCRIPTION OF ITEM SUBMITTED e.	TYPE OF SUBMITTAL: DATA f.	DRAWINGS g.	INSTRUCTIONS h.	SCHEDULES i.	STATEMENTS j.	REPORTS k.	CERTIFICATES l.	SAMPLES m.	RECORDS n.	O&M MANUALS o.	CLASSIFICATION: INFORMATION ONLY p.	GOVERNMENT APPROVED q.	REVIEWER r.	CONTRACTOR SCHEDULE DATES: SUBMIT s.	APPROVAL NEEDED BY t.	MATERIAL NEEDED BY u.	CONTRACTOR ACTION: CODE v.	DATE w.	SUBMIT TO GOVERN-MENT x.	GOVERNMENT ACTION: CODE y.	DATE z.	REMARKS aa.
			3.6.4	Nailers and Nailing Strips		X										X										
			2.1.1	Grading and Marking							X				X											
			2.3	Insulation							X					X										

SUBMITTAL REGISTER
(ER 415 1-10)

CONTRACT NO.

TITLE AND LOCATION
CONSOLIDATED MAINTENANCE FACILITY

CONTRACTOR

SPECIFICATION SECTION
07220

ACTIVITY NO. a.	TRANS-MITTAL NO. b.	ITEM NO. c.	SPECIFICATION PARAGRAPH NUMBER d.	DESCRIPTION OF ITEM SUBMITTED e.	TYPE OF SUBMITTAL: DATA f.	DRAWINGS g.	INSTRUCTIONS h.	SCHEDULES i.	STATEMENTS j.	REPORTS k.	CERTIFICATES l.	SAMPLES m.	RECORDS n.	O&M MANUALS o.	CLASSIFICATION: INFORMATION ONLY p.	GOVERNMENT APPROVED q.	REVIEWER r.	CONTRACTOR SCHEDULE DATES: SUBMIT s.	APPROVAL NEEDED BY t.	MATERIAL NEEDED BY u.	CONTRACTOR ACTION: CODE v.	DATE w.	SUBMIT TO GOVERN-MENT x.	GOVERNMENT ACTION: CODE y.	DATE z.	REMARKS aa.
			3.7	Application of Insulation			X								X											
			1.2	Inspection					X						X											
			2.2	Insulation							X					X										

SUBMITTAL REGISTER
(ER 415 1-10)

CONTRACT NO.

TITLE AND LOCATION
CONSOLIDATED MAINTENANCE FACILITY

CONTRACTOR

SPECIFICATION SECTION
07412

ACTIVITY NO. a.	TRANS-MITTAL NO. b.	ITEM NO. c.	SPECIFICATION PARAGRAPH NUMBER d.	DESCRIPTION OF ITEM SUBMITTED e.	TYPE OF SUBMITTAL: DATA f.	DRAWINGS g.	INSTRUCTIONS h.	SCHEDULES i.	STATEMENTS j.	REPORTS k.	CERTIFICATES l.	SAMPLES m.	RECORDS n.	O&M MANUALS o.	CLASSIFICATION: INFORMATION ONLY p.	GOVERNMENT APPROVED q.	REVIEWER r.	CONTRACTOR SCHEDULE DATES: SUBMIT s.	APPROVAL NEEDED BY t.	MATERIAL NEEDED BY u.	CONTRACTOR ACTION: CODE v.	DATE w.	SUBMIT TO GOVERN-MENT x.	GOVERNMENT ACTION: CODE y.	DATE z.	REMARKS aa.
			1.5	Metal Roofing		X										X										
			2.1	Roof Panels							X					X										
			3.1	Installation							X					X										
			2.2	Accessories							X					X										
			2.6	Insulation							X					X										
			1.4.2	Installer							X				X											
			1.5	Warranties							X				X											
			2.2	Accessories								X				X										
			2.1	Roof Panels								X				X										
			2.3	Fasteners								X				X										
			2.9	Gaskets and Insulating Compounds								X				X										
			2.8	Sealant								X				X										

SUBMITTAL REGISTER
(ER 415 1-10)

CONTRACT NO.

TITLE AND LOCATION
CONSOLIDATED MAINTENANCE FACILITY

CONTRACTOR

SPECIFICATION SECTION
07413

ACTIVITY NO. a.	TRANS-MITTAL NO. b.	ITEM NO. c.	SPECIFICATION PARAGRAPH NUMBER d.	DESCRIPTION OF ITEM SUBMITTED e.	TYPE OF SUBMITTAL: DATA f.	DRAWINGS g.	INSTRUCTIONS h.	SCHEDULES i.	STATEMENTS j.	REPORTS k.	CERTIFICATES l.	SAMPLES m.	RECORDS n.	O&M MANUALS o.	CLASSIFICATION: INFORMATION ONLY p.	GOVERNMENT APPROVED q.	REVIEWER r.	CONTRACTOR SCHEDULE DATES: SUBMIT s.	APPROVAL NEEDED BY t.	MATERIAL NEEDED BY u.	CONTRACTOR ACTION: CODE v.	DATE w.	SUBMIT TO GOVERN-MENT x.	GOVERNMENT ACTION: CODE y.	DATE z.	REMARKS aa.
			2.1	Siding		X										X										
			2.1	Siding							X					X										
			3.1	Installation							X					X										
			2.3	Accessories							X					X										
			1.3	Insulation							X					X										
			2.3	Accessories								X			X											
			2.1	Siding								X				X										
			2.4	Fasteners								X			X											
			1.3	Insulation								X			X											
			2.9	Gaskets and Insulating Compounds								X			X											
			2.8	Sealant								X			X											
			2.7	Wall Liners								X				X										

SUBMITTAL REGISTER
(ER 415 1-10)

CONTRACT NO.

TITLE AND LOCATION
CONSOLIDATED MAINTENANCE FACILITY

CONTRACTOR

SPECIFICATION SECTION
07600

ACTIVITY NO. a.	TRANS-MITTAL NO. b.	ITEM NO c.	SPECIFICATION PARAGRAPH NUMBER d.	DESCRIPTION OF ITEM SUBMITTED e.	TYPE OF SUBMITTAL: DATA f.	DRAWINGS g.	INSTRUCTIONS h.	SCHEDULES i.	STATEMENTS j.	REPORTS k.	CERTIFICATES l.	SAMPLES m.	RECORDS n.	O&M MANUALS o.	CLASSIFICATION: INFORMATION ONLY p.	GOVERNMENT APPROVED q.	REVIEWER r.	CONTRACTOR SCHEDULE DATES: SUBMIT s.	APPROVAL NEEDED BY t.	MATERIAL NEEDED BY u.	CONTRACTOR ACTION: CODE v.	DATE w.	SUBMIT TO GOVERN-MENT x.	GOVERNMENT ACTION: CODE y.	DATE z.	REMARKS aa.
			2.1	Materials		X										X										

SUBMITTAL REGISTER
(ER 415 1-10)

CONTRACT NO.

TITLE AND LOCATION
CONSOLIDATED MAINTENANCE FACILITY

CONTRACTOR

SPECIFICATION SECTION
07840

ACTIVITY NO. a.	TRANS-MITTAL NO. b.	ITEM NO. c.	SPECIFICATION PARAGRAPH NUMBER d.	DESCRIPTION OF ITEM SUBMITTED e.	TYPE OF SUBMITTAL: DATA f.	DRAWINGS g.	INSTRUCTIONS h.	SCHEDULES i.	STATEMENTS j.	REPORTS k.	CERTIFICATES l.	SAMPLES m.	RECORDS n.	O&M MANUALS o.	CLASSIFICATION: INFORMATION ONLY p.	GOVERNMENT APPROVED q.	REVIEWER r.	CONTRACTOR SCHEDULE DATES: SUBMIT s.	APPROVAL NEEDED BY t.	MATERIAL NEEDED BY u.	CONTRACTOR ACTION: CODE v.	DATE w.	SUBMIT TO GOVERN-MENT x.	GOVERNMENT ACTION: CODE y.	DATE z.	REMARKS aa.
			2.1	Firestopping Materials		X										X										
			2.1	Firestopping Materials							X					X										
			1.5	Installer Qualifications							X					X										
			3.3	Inspection							X					X										

SUBMITTAL REGISTER
(ER 415 1-10)

CONTRACT NO.

TITLE AND LOCATION
CONSOLIDATED MAINTENANCE FACILITY

CONTRACTOR

SPECIFICATION SECTION
07900

ACTIVITY NO. a.	TRANS-MITTAL NO. b.	ITEM NO. c.	SPECIFICATION PARAGRAPH NUMBER d.	DESCRIPTION OF ITEM SUBMITTED e.	TYPE OF SUBMITTAL: DATA f.	DRAWINGS g.	INSTRUCTIONS h.	SCHEDULES i.	STATEMENTS j.	REPORTS k.	CERTIFICATES l.	SAMPLES m.	RECORDS n.	O&M MANUALS o.	CLASSIFICATION: INFORMATION ONLY p.	GOVERNMENT APPROVED q.	REVIEWER r.	CONTRACTOR SCHEDULE DATES: SUBMIT s.	APPROVAL NEEDED BY t.	MATERIAL NEEDED BY u.	CONTRACTOR ACTION: CODE v.	DATE w.	SUBMIT TO GOVERN-MENT x.	GOVERNMENT ACTION: CODE y.	DATE z.	REMARKS aa.
			2.1	Backing	X											X										
			2.2	Bond-Breaker	X											X										
			2.5	Sealant	X											X										
			2.5	Sealant							X				X											

SUBMITTAL REGISTER
(ER 415 1-10)

CONTRACT NO.

TITLE AND LOCATION
CONSOLIDATED MAINTENANCE FACILITY

CONTRACTOR

SPECIFICATION SECTION
08110

ACTIVITY NO. a.	TRANS-MITTAL NO. b.	ITEM NO c.	SPECIFICATION PARAGRAPH NUMBER d.	DESCRIPTION OF ITEM SUBMITTED e.	TYPE OF SUBMITTAL: DATA f.	DRAWINGS g.	INSTRUCTIONS h.	SCHEDULES i.	STATEMENTS j.	REPORTS k.	CERTIFICATES l.	SAMPLES m.	RECORDS n.	O&M MANUALS o.	CLASSIFICATION: INFORMATION ONLY p.	GOVERNMENT APPROVED q.	REVIEWER r.	CONTRACTOR SCHEDULE DATES: SUBMIT s.	APPROVAL NEEDED BY t.	MATERIAL NEEDED BY u.	CONTRACTOR ACTION: CODE v.	DATE w.	SUBMIT TO GOVERN-MENT x.	GOVERNMENT ACTION: CODE y.	DATE z.	REMARKS aa.
			1.2	Steel Doors and Frames		X										X										
			2.2	Fire Rated Doors						X					X											
			2.2	Fire Rated Doors							X					X										
			2.3	Thermal Insulated Doors							X					X										

SUBMITTAL REGISTER
(ER 415 1-10)

CONTRACT NO.

TITLE AND LOCATION
CONSOLIDATED MAINTENANCE FACILITY

CONTRACTOR

SPECIFICATION SECTION
08120

ACTIVITY NO. a.	TRANS-MITTAL NO. b.	ITEM NO. c.	SPECIFICATION PARAGRAPH NUMBER d.	DESCRIPTION OF ITEM SUBMITTED e.	TYPE OF SUBMITTAL: DATA f.	DRAWINGS g.	INSTRUCTIONS h.	SCHEDULES i.	STATEMENTS j.	REPORTS k.	CERTIFICATES l.	SAMPLES m.	RECORDS n.	O&M MANUALS o.	CLASSIFICATION: INFORMATION ONLY p.	GOVERNMENT APPROVED q.	REVIEWER r.	CONTRACTOR SCHEDULE DATES: SUBMIT s.	APPROVAL NEEDED BY t.	MATERIAL NEEDED BY u.	CONTRACTOR ACTION: CODE v.	DATE w.	SUBMIT TO GOVERN-MENT x.	GOVERNMENT ACTION: CODE y.	DATE z.	REMARKS aa.
			1.4	Aluminum Doors and Frames	X											X										
			1.4	Aluminum Doors and Frames		X										X										
			2.5	Installation			X								X											
			1.4	Cleaning			X								X											
			1.4	Aluminum Doors						X						X										
			2.1.1	Finishes								X														
			1.4									X														

SUBMITTAL REGISTER
(ER 415 1-10)

CONTRACT NO.

TITLE AND LOCATION
CONSOLIDATED MAINTENANCE FACILITY

CONTRACTOR

SPECIFICATION SECTION
08330

ACTIVITY NO a.	TRANS-MITTAL NO. b.	ITEM NO c.	SPECIFICATION PARAGRAPH NUMBER d.	DESCRIPTION OF ITEM SUBMITTED e.	TYPE OF SUBMITTAL: DATA f.	DRAWINGS g.	INSTRUCTIONS h.	SCHEDULES i.	STATEMENTS j.	REPORTS k.	CERTIFICATES l.	SAMPLES m.	RECORDS n.	O&M MANUALS o.	CLASSIFICATION: INFORMATION ONLY p.	GOVERNMENT APPROVED q.	REVIEWER r.	CONTRACTOR SCHEDULE DATES: SUBMIT s.	APPROVAL NEEDED BY t.	MATERIAL NEEDED BY u.	CONTRACTOR ACTION: CODE v.	DATE w.	SUBMIT TO GOVERN-MENT x.	GOVERNMENT ACTION: CODE y.	DATE z.	REMARKS aa.
			1.3	Overhead Rolling Door Unit	X											X										
			1.3	Overhead Rolling Door Unit		X										X										
			1.3	Overhead Rolling Door Unit			X								X											
			1.3	Overhead Rolling Door Unit								X				X										
			1.3	Operation Manual										X		X										
			1.3	Maintenance and Repair Manual										X		X										

SUBMITTAL REGISTER
(ER 415 1-10)

CONTRACT NO.

TITLE AND LOCATION
CONSOLIDATED MAINTENANCE FACILITY

CONTRACTOR

SPECIFICATION SECTION
08520

ACTIVITY NO a.	TRANS-MITTAL NO. b.	ITEM NO c.	SPECIFICATION PARAGRAPH NUMBER d.	DESCRIPTION OF ITEM SUBMITTED e.	TYPE OF SUBMITTAL: DATA f.	DRAWINGS g.	INSTRUCTIONS h.	SCHEDULES i.	STATEMENTS j.	REPORTS k.	CERTIFICATES l.	SAMPLES m.	RECORDS n.	O&M MANUALS o.	CLASSIFICATION: INFORMATION ONLY p.	GOVERNMENT APPROVED q.	REVIEWER r.	CONTRACTOR SCHEDULE DATES: SUBMIT s.	APPROVAL NEEDED BY t.	MATERIAL NEEDED BY u.	CONTRACTOR ACTION: CODE v.	DATE w.	SUBMIT TO GOVERN-MENT x.	GOVERNMENT ACTION: CODE y.	DATE z.	REMARKS aa.
			1.3	Aluminum Windows	X											X										
			1.3	Aluminum Windows		X										X										
			2.3	Insect Screens		X										X										
			1.3	Aluminum Windows			X								X											
			1.3	Aluminum Windows						X					X											
			1.3	Aluminum Windows							X				X											
			1.3	Aluminum Windows								X				X										

SUBMITTAL REGISTER
(ER 415 1-10)

CONTRACT NO.

TITLE AND LOCATION
CONSOLIDATED MAINTENANCE FACILITY

CONTRACTOR

SPECIFICATION SECTION
08700

ACTIVITY NO. a.	TRANS-MITTAL NO. b.	ITEM NO. c.	SPECIFICATION PARAGRAPH NUMBER d.	DESCRIPTION OF ITEM SUBMITTED e.	TYPE OF SUBMITTAL: DATA f.	DRAWINGS g.	INSTRUCTIONS h.	SCHEDULES i.	STATEMENTS j.	REPORTS k.	CERTIFICATES l.	SAMPLES m.	RECORDS n.	O&M MANUALS o.	CLASSIFICATION: INFORMATION ONLY p.	GOVERNMENT APPROVED q.	REVIEWER r.	CONTRACTOR SCHEDULE DATES: SUBMIT s.	APPROVAL NEEDED BY t.	MATERIAL NEEDED BY u.	CONTRACTOR ACTION: CODE v.	DATE w.	SUBMIT TO GOVERN-MENT x.	GOVERNMENT ACTION: CODE y.	DATE z.	REMARKS aa.
			1.2	Hardware and Accessories	X											X										
			1.2	Hardware Devices		X										X										
			1.2	Hardware Schedule				X								X										
			1.2	Keying Schedule				X								X										
			1.2	Hardware and Accessories							X					X										

SUBMITTAL REGISTER
(ER 415 1-10)

CONTRACT NO.

TITLE AND LOCATION
CONSOLIDATED MAINTENANCE FACILITY

CONTRACTOR

SPECIFICATION SECTION
08810

ACTIVITY NO. a.	TRANS-MITTAL NO. b.	ITEM NO. c.	SPECIFICATION PARAGRAPH NUMBER d.	DESCRIPTION OF ITEM SUBMITTED e.	TYPE OF SUBMITTAL: DATA f.	DRAWINGS g.	INSTRUCTIONS h.	SCHEDULES i.	STATEMENTS j.	REPORTS k.	CERTIFICATES l.	SAMPLES m.	RECORDS n.	O&M MANUALS o.	CLASSIFICATION: INFORMATION ONLY p.	GOVERNMENT APPROVED q.	REVIEWER r.	CONTRACTOR SCHEDULE DATES: SUBMIT s.	APPROVAL NEEDED BY t.	MATERIAL NEEDED BY u.	CONTRACTOR ACTION: CODE v.	DATE w.	SUBMIT TO GOVERN-MENT x.	GOVERNMENT ACTION: CODE y.	DATE z.	REMARKS aa.
			1.2	Glass	X											X										
			1.2	Glazing Accessories	X											X										
			1.2	Glazing Materials and Accessories		X										X										
			1.2	Glass							X				X											
			1.2	Glass								X				X										

SUBMITTAL REGISTER
(ER 415 1-10)

CONTRACT NO.

TITLE AND LOCATION
CONSOLIDATED MAINTENANCE FACILITY

CONTRACTOR

SPECIFICATION SECTION
09250

ACTIVITY NO. a.	TRANS-MITTAL NO. b.	ITEM NO. c.	SPECIFICATION PARAGRAPH NUMBER d.	DESCRIPTION OF ITEM SUBMITTED e.	TYPE OF SUBMITTAL: DATA f.	DRAWINGS g.	INSTRUCTIONS h.	SCHEDULES i.	STATEMENTS j.	REPORTS k.	CERTIFICATES l.	SAMPLES m.	RECORDS n.	O&M MANUALS o.	CLASSIFICATION: INFORMATION ONLY p.	GOVERNMENT APPROVED q.	REVIEWER r.	CONTRACTOR SCHEDULE DATES: SUBMIT s.	APPROVAL NEEDED BY t.	MATERIAL NEEDED BY u.	CONTRACTOR ACTION: CODE v.	DATE w.	SUBMIT TO GOVERN-MENT x.	GOVERNMENT ACTION: CODE y.	DATE z.	REMARKS aa.
			1.3	Steel Framing		X										X										
			3.7	Fire-Resistant Assemblies		X										X										
			1.3	Gypsum Wallboard							X				X											
			2.4.3	Water-Resistant Gypsum Board							X				X											
			2.4.7	Exterior Gypsum Soffit Board							X				X											
			1.3	Steel Framing							X				X											
			2.4.2	Fire-Rated Gypsum Board							X				X											

SUBMITTAL REGISTER
(ER 415 1-10)

CONTRACT NO.

TITLE AND LOCATION
CONSOLIDATED MAINTENANCE FACILITY

CONTRACTOR

SPECIFICATION SECTION
09310

ACTIVITY NO. a.	TRANS-MITTAL NO. b.	ITEM NO. c.	SPECIFICATION PARAGRAPH NUMBER d.	DESCRIPTION OF ITEM SUBMITTED e.	TYPE OF SUBMITTAL: DATA f.	DRAWINGS g.	INSTRUCTIONS h.	SCHEDULES i.	STATEMENTS j.	REPORTS k.	CERTIFICATES l.	SAMPLES m.	RECORDS n.	O&M MANUALS o.	CLASSI-FICATION: INFORMATION ONLY p.	GOVERNMENT APPROVED q.	REVIEWER r.	CONTRACTOR SCHEDULE DATES: SUBMIT s.	APPROVAL NEEDED BY t.	MATERIAL NEEDED BY u.	CONTRACTOR ACTION: CODE v.	DATE w.	SUBMIT TO GOVERN-MENT x.	GOVERNMENT ACTION: CODE y.	DATE z.	REMARKS aa.
			2.1	Tile	X										X											
			1.2	Setting-Bed	X										X											
			2.4	Mortar, Grout, and Adhesive	X										X											
			2.1	Tile			X								X											
			1.2	Mortar and Grout			X								X											
			2.1	Tile							X				X											
			2.4	Mortar, Grout, and Adhesive							X				X											
			2.1	Tile								X				X										
			1.2	Accessories								X				X										
			2.5	Marble Thresholds								X				X										

SUBMITTAL REGISTER
(ER 415 1-10)

CONTRACT NO.

TITLE AND LOCATION
CONSOLIDATED MAINTENANCE FACILITY

CONTRACTOR

SPECIFICATION SECTION
09510

ACTIVITY NO a.	TRANS-MITTAL NO. b.	ITEM NO c.	SPECIFICATION PARAGRAPH NUMBER d.	DESCRIPTION OF ITEM SUBMITTED e.	TYPE OF SUBMITTAL: DATA f.	DRAWINGS g.	INSTRUCTIONS h.	SCHEDULES i.	STATEMENTS j.	REPORTS k.	CERTIFICATES l.	SAMPLES m.	RECORDS n.	O&M MANUALS o.	CLASSIFICATION: INFORMATION ONLY p.	GOVERNMENT APPROVED q.	REVIEWER r.	CONTRACTOR SCHEDULE DATES: SUBMIT s.	APPROVAL NEEDED BY t.	MATERIAL NEEDED BY u.	CONTRACTOR ACTION: CODE v.	DATE w.	SUBMIT TO GOVERN-MENT x.	GOVERNMENT ACTION: CODE y.	DATE z.	REMARKS aa.
			1.3	Acoustical Ceiling System	X											X										
			1.3	Acoustical Ceiling System		X										X										
			2.1	Acoustical Units							X				X											
			2.1	Acoustical Units								X				X										

SUBMITTAL REGISTER
(ER 415 1-10)

CONTRACT NO.

TITLE AND LOCATION
CONSOLIDATED MAINTENANCE FACILITY

CONTRACTOR

SPECIFICATION SECTION
09650

ACTIVITY NO. a.	TRANS-MITTAL NO. b.	ITEM NO. c.	SPECIFICATION PARAGRAPH NUMBER d.	DESCRIPTION OF ITEM SUBMITTED e.	TYPE OF SUBMITTAL: DATA f.	DRAWINGS g.	INSTRUCTIONS h.	SCHEDULES i.	STATEMENTS j.	REPORTS k.	CERTIFICATES l.	SAMPLES m.	RECORDS n.	O&M MANUALS o.	CLASSI-FICATION: INFORMATION ONLY p.	GOVERNMENT APPROVED q.	REVIEWER r.	CONTRACTOR SCHEDULE DATES: SUBMIT s.	APPROVAL NEEDED BY t.	MATERIAL NEEDED BY u.	CONTRACTOR ACTION: CODE v.	DATE w.	SUBMIT TO GOVERN-MENT x.	GOVERNMENT ACTION: CODE y.	DATE z.	REMARKS aa.
			1.3	Resilient Flooring and Accessories	X											X										
			1.3	Resilient Flooring and Accessories						X						X										
			1.3	Resilient Flooring and Accessories								X				X										

SUBMITTAL REGISTER
(ER 415 1-10)

CONTRACT NO.

TITLE AND LOCATION
CONSOLIDATED MAINTENANCE FACILITY

CONTRACTOR

SPECIFICATION SECTION
09900

ACTIVITY NO. a.	TRANS-MITTAL NO. b.	ITEM NO. c.	SPECIFICATION PARAGRAPH NUMBER d.	DESCRIPTION OF ITEM SUBMITTED e.	TYPE OF SUBMITTAL: DATA f.	DRAWINGS g.	INSTRUCTIONS h.	SCHEDULES i.	STATEMENTS j.	REPORTS k.	CERTIFICATES l.	SAMPLES m.	RECORDS n.	O&M MANUALS o.	CLASSIFICATION: INFORMATION ONLY p.	GOVERNMENT APPROVED q.	REVIEWER r.	CONTRACTOR SCHEDULE DATES: SUBMIT s.	APPROVAL NEEDED BY t.	MATERIAL NEEDED BY u.	CONTRACTOR ACTION: CODE v.	DATE w.	SUBMIT TO GOVERN-MENT x.	GOVERNMENT ACTION: CODE y.	DATE z.	REMARKS aa.
			2.1	Paint	X											X										
			3.3	Mixing and Thinning			X								X											
			3.4	Application			X								X											
			2.1	Paint						X						X										
			2.1.3	Lead							X					X										
			2.1.2	Mildewcide and Insecticide							X					X										
			2.1.5	Volatile Organic Compound (VOC)							X					X										
				Content																						
			2.1	Paint								X				X										

SUBMITTAL REGISTER
(ER 415 1-10)

CONTRACT NO.

TITLE AND LOCATION
CONSOLIDATED MAINTENANCE FACILITY

CONTRACTOR

SPECIFICATION SECTION
10100

ACTIVITY NO a.	TRANS-MITTAL NO. b.	ITEM NO c.	SPECIFICATION PARAGRAPH NUMBER d.	DESCRIPTION OF ITEM SUBMITTED e.	TYPE OF SUBMITTAL: DATA f.	DRAWINGS g.	INSTRUCTIONS h.	SCHEDULES i.	STATEMENTS j.	REPORTS k.	CERTIFICATES l.	SAMPLES m.	RECORDS n.	O&M MANUALS o.	CLASSIFICATION: INFORMATION ONLY p.	GOVERNMENT APPROVED q.	REVIEWER r.	CONTRACTOR SCHEDULE DATES: SUBMIT s.	APPROVAL NEEDED BY t.	MATERIAL NEEDED BY u.	CONTRACTOR ACTION: CODE v.	DATE w.	SUBMIT TO GOVERN-MENT x.	GOVERNMENT ACTION: CODE y.	DATE z.	REMARKS aa.
			1.3	Visual Display Boards	X											X										
			1.3	Visual Display Boards			X								X											
			1.3	Visual Display Boards							X				X											
			2.2.6	Aluminum								X				X										
			2.2.1	Porcelain Enamel								X				X										
			2.2	Materials								X				X										

SUBMITTAL REGISTER
(ER 415 1-10)

CONTRACT NO.

TITLE AND LOCATION
CONSOLIDATED MAINTENANCE FACILITY

CONTRACTOR

SPECIFICATION SECTION
10160

ACTIVITY NO. a.	TRANS-MITTAL NO. b.	ITEM NO. c.	SPECIFICATION PARAGRAPH NUMBER d.	DESCRIPTION OF ITEM SUBMITTED e.	TYPE OF SUBMITTAL: DATA f.	DRAWINGS g.	INSTRUCTIONS h.	SCHEDULES i.	STATEMENTS j.	REPORTS k.	CERTIFICATES l.	SAMPLES m.	RECORDS n.	O&M MANUALS o.	CLASSIFICATION: INFORMATION ONLY p.	GOVERNMENT APPROVED q.	REVIEWER r.	CONTRACTOR SCHEDULE DATES: SUBMIT s.	APPROVAL NEEDED BY t.	MATERIAL NEEDED BY u.	CONTRACTOR ACTION: CODE v.	DATE w.	SUBMIT TO GOVERN-MENT x.	GOVERNMENT ACTION: CODE y.	DATE z.	REMARKS aa.
			1.3	Toilet Partition System	X											X										
			1.3	Toilet Partition System		X										X										
			1.3	Toilet Partition System								X				X										

SUBMITTAL REGISTER
(ER 415 1-10)

CONTRACT NO.

TITLE AND LOCATION
CONSOLIDATED MAINTENANCE FACILITY

CONTRACTOR

SPECIFICATION SECTION
10430

ACTIVITY NO. a.	TRANS-MITTAL NO. b.	ITEM NO c.	SPECIFICATION PARAGRAPH NUMBER d.	DESCRIPTION OF ITEM SUBMITTED e.	TYPE OF SUBMITTAL: DATA f.	DRAWINGS g.	INSTRUCTIONS h.	SCHEDULES i.	STATEMENTS j.	REPORTS k.	CERTIFICATES l.	SAMPLES m.	RECORDS n.	O&M MANUALS o.	CLASSI-FICATION: INFORMATION ONLY p.	GOVERNMENT APPROVED q.	REVIEWER r.	CONTRACTOR SCHEDULE DATES: SUBMIT s.	APPROVAL NEEDED BY t.	MATERIAL NEEDED BY u.	CONTRACTOR ACTION: CODE v.	DATE w.	SUBMIT TO GOVERN-MENT x.	GOVERNMENT ACTION: CODE y.	DATE z.	REMARKS aa.
			1.5	Exterior Signs	X										X											
			1.5	Exterior Signs		X										X										
			1.5	Exterior Signs			X								X											
			1.5	Exterior Signs								X				X										

SUBMITTAL REGISTER
(ER 415 1-10)

CONTRACT NO.

TITLE AND LOCATION
CONSOLIDATED MAINTENANCE FACILITY

CONTRACTOR

SPECIFICATION SECTION
10440

ACTIVITY NO. a.	TRANS-MITTAL NO. b.	ITEM NO. c.	SPECIFICATION PARAGRAPH NUMBER d.	DESCRIPTION OF ITEM SUBMITTED e.	TYPE OF SUBMITTAL: DATA f.	DRAWINGS g.	INSTRUCTIONS h.	SCHEDULES i.	STATEMENTS j.	REPORTS k.	CERTIFICATES l.	SAMPLES m.	RECORDS n.	O&M MANUALS o.	CLASSIFICATION: INFORMATION ONLY p.	GOVERNMENT APPROVED q.	REVIEWER r.	CONTRACTOR SCHEDULE DATES: SUBMIT s.	APPROVAL NEEDED BY t.	MATERIAL NEEDED BY u.	CONTRACTOR ACTION: CODE v.	DATE w.	SUBMIT TO GOVERN-MENT x.	GOVERNMENT ACTION: CODE y.	DATE z.	REMARKS aa.
			1.3	Interior Signage	X										X											
			1.3	Interior Signage		X										X										
			1.3	Interior Signage								X				X										

SUBMITTAL REGISTER
(ER 415 1-10)

CONTRACT NO.

TITLE AND LOCATION
CONSOLIDATED MAINTENANCE FACILITY

CONTRACTOR

SPECIFICATION SECTION
10522

ACTIVITY NO. a.	TRANS-MITTAL NO. b.	ITEM NO. c.	SPECIFICATION PARAGRAPH NUMBER d.	DESCRIPTION OF ITEM SUBMITTED e.	TYPE OF SUBMITTAL: DATA f.	DRAWINGS g.	INSTRUCTIONS h.	SCHEDULES i.	STATEMENTS j.	REPORTS k.	CERTIFICATES l.	SAMPLES m.	RECORDS n.	O&M MANUALS o.	CLASSI-FICATION: INFORMATION ONLY p.	GOVERNMENT APPROVED q.	REVIEWER r.	CONTRACTOR SCHEDULE DATES: SUBMIT s.	APPROVAL NEEDED BY t.	MATERIAL NEEDED BY u.	CONTRACTOR ACTION: CODE v.	DATE w.	SUBMIT TO GOVERN-MENT x.	GOVERNMENT ACTION: CODE y.	DATE z.	REMARKS aa.
			1.1	Fire Extinguisher and Cabinet	X																					
			1.1	Finish Samples								X														
			1.1	Manufacturer's Installation			X																			
				Instructions																						

SUBMITTAL REGISTER
(ER 415 1-10)

CONTRACT NO.

TITLE AND LOCATION
CONSOLIDATED MAINTENANCE FACILITY

CONTRACTOR

SPECIFICATION SECTION
10800

ACTIVITY NO. a.	TRANS-MITTAL NO. b.	ITEM NO. c.	SPECIFICATION PARAGRAPH NUMBER d.	DESCRIPTION OF ITEM SUBMITTED e.	TYPE OF SUBMITTAL: DATA f.	DRAWINGS g.	INSTRUCTIONS h.	SCHEDULES i.	STATEMENTS j.	REPORTS k.	CERTIFICATES l.	SAMPLES m.	RECORDS n.	O&M MANUALS o.	CLASSI-FICATION: INFORMATION ONLY p.	GOVERNMENT APPROVED q.	REVIEWER r.	CONTRACTOR SCHEDULE DATES: SUBMIT s.	APPROVAL NEEDED BY t.	MATERIAL NEEDED BY u.	CONTRACTOR ACTION: CODE v.	DATE w.	SUBMIT TO GOVERN-MENT x.	GOVERNMENT ACTION: CODE y.	DATE z.	REMARKS aa.
			2.1.2	Finishes	X										X											
			2.2	Accessory Items	X										X											
			2.1.2	Finishes								X				X										
			2.2	Accessory Items								X				X										

SUBMITTAL REGISTER
(ER 415 1-10)

CONTRACT NO.

TITLE AND LOCATION
CONSOLIDATED MAINTENANCE FACILITY

CONTRACTOR

SPECIFICATION SECTION
10900

ACTIVITY NO. a.	TRANS-MITTAL NO. b.	ITEM NO. c.	SPECIFICATION PARAGRAPH NUMBER d.	DESCRIPTION OF ITEM SUBMITTED e.	TYPE OF SUBMITTAL: DATA f.	DRAWINGS g.	INSTRUCTIONS h.	SCHEDULES i.	STATEMENTS j.	REPORTS k.	CERTIFICATES l.	SAMPLES m.	RECORDS n.	O&M MANUALS o.	CLASSIFICATION: INFORMATION ONLY p.	GOVERNMENT APPROVED q.	REVIEWER r.	CONTRACTOR SCHEDULE DATES: SUBMIT s.	APPROVAL NEEDED BY t.	MATERIAL NEEDED BY u.	CONTRACTOR ACTION: CODE v.	DATE w.	SUBMIT TO GOVERN-MENT x.	GOVERNMENT ACTION: CODE y.	DATE z.	REMARKS aa.
			1.4	Wardrobe Locker Units	X											X										
			1.4	Wardrobe Locker Units		X										X										
			1.4	Static Load Tests						X					X											
			1.4	Wardrobe Locker Units							X				X											
			1.4	Wardrobe Locker Units								X				X										
			2.3.11	Metal Finishes								X				X										

SUBMITTAL REGISTER
(ER 415 1-10)

CONTRACT NO.

TITLE AND LOCATION
CONSOLIDATED MAINTENANCE FACILITY

CONTRACTOR

SPECIFICATION SECTION
12320

ACTIVITY NO. a.	TRANS-MITTAL NO. b.	ITEM NO c.	SPECIFICATION PARAGRAPH NUMBER d.	DESCRIPTION OF ITEM SUBMITTED e.	TYPE OF SUBMITTAL: DATA f.	DRAWINGS g.	INSTRUCTIONS h.	SCHEDULES i.	STATEMENTS j.	REPORTS k.	CERTIFICATES l.	SAMPLES m.	RECORDS n.	O&M MANUALS o.	CLASSI-FICATION: INFORMATION ONLY p.	GOVERNMENT APPROVED q.	REVIEWER r.	CONTRACTOR SCHEDULE DATES: SUBMIT s.	APPROVAL NEEDED BY t.	MATERIAL NEEDED BY u.	CONTRACTOR ACTION: CODE v.	DATE w.	SUBMIT TO GOVERN-MENT x.	GOVERNMENT ACTION: CODE y.	DATE z.	REMARKS aa.
			1.3	Cabinets and Countertops	X										X											
			1.3	Cabinets and Countertops		X										X										
			1.3	Cabinets and Countertops						X					X											
			1.3	Cabinets and Countertops								X				X										

SUBMITTAL REGISTER
(ER 415 1-10)

CONTRACT NO.

TITLE AND LOCATION
CONSOLIDATED MAINTENANCE FACILITY

CONTRACTOR

SPECIFICATION SECTION
12490

ACTIVITY NO. a.	TRANS-MITTAL NO. b.	ITEM NO. c.	SPECIFICATION PARAGRAPH NUMBER d.	DESCRIPTION OF ITEM SUBMITTED e.	TYPE OF SUBMITTAL: DATA f.	DRAWINGS g.	INSTRUCTIONS h.	SCHEDULES i.	STATEMENTS j.	REPORTS k.	CERTIFICATES l.	SAMPLES m.	RECORDS n.	O&M MANUALS o.	CLASSIFICATION: INFORMATION ONLY p.	GOVERNMENT APPROVED q.	REVIEWER r.	CONTRACTOR SCHEDULE DATES: SUBMIT s.	APPROVAL NEEDED BY t.	MATERIAL NEEDED BY u.	CONTRACTOR ACTION: CODE v.	DATE w.	SUBMIT TO GOVERN-MENT x.	GOVERNMENT ACTION: CODE y.	DATE z.	REMARKS aa.
			1.3	Window Treatments and Hardware	X										X											
			1.3	Window Treatments and Hardware		X										X										
			1.3	Window Treatments and Hardware								X				X										

SUBMITTAL REGISTER
(ER 415 1-10)

CONTRACT NO.

TITLE AND LOCATION
CONSOLIDATED MAINTENANCE FACILITY

CONTRACTOR

SPECIFICATION SECTION
13080

ACTIVITY NO. a.	TRANS-MITTAL NO. b.	ITEM NO. c.	SPECIFICATION PARAGRAPH NUMBER d.	DESCRIPTION OF ITEM SUBMITTED e.	TYPE OF SUBMITTAL: DATA f.	DRAWINGS g.	INSTRUCTIONS h.	SCHEDULES i.	STATEMENTS j.	REPORTS k.	CERTIFICATES l.	SAMPLES m.	RECORDS n.	O&M MANUALS o.	CLASSI-FICATION: INFORMATION ONLY p.	GOVERNMENT APPROVED q.	REVIEWER r.	CONTRACTOR SCHEDULE DATES: SUBMIT s.	APPROVAL NEEDED BY t.	MATERIAL NEEDED BY u.	CONTRACTOR ACTION: CODE v.	DATE w.	SUBMIT TO GOVERN-MENT x.	GOVERNMENT ACTION: CODE y.	DATE z.	REMARKS aa.
			3.15	Bridge Cranes and Monorails	X											X										
			3.1	Bracing and Coupling	X											X										
			3.13	Lighting Fixtures in Buildings	X											X										
			3.12	Miscellaneous Equipment	X											X										
			3.1	Bracing and Coupling		X										X										
			3.3	Flexible Couplings or Joints		X										X										
			3.7	Resilient Vibration Isolation Devices		X										X										
			3.15	Bridge Cranes and Monorails		X										X										
			3.13	Lighting Fixtures in Buildings		X										X										
			3.12	Miscellaneous Equipment		X																				
			2.1.3.1	Flexible Ball Joints							X					X										

SUBMITTAL REGISTER
(ER 415 1-10)

CONTRACT NO.

TITLE AND LOCATION
CONSOLIDATED MAINTENANCE FACILITY

CONTRACTOR

SPECIFICATION SECTION
13090

ACTIVITY NO a.	TRANS-MITTAL NO. b.	ITEM NO c.	SPECIFICATION PARAGRAPH NUMBER d.	DESCRIPTION OF ITEM SUBMITTED e.	TYPE OF SUBMITTAL: DATA f.	DRAWINGS g.	INSTRUCTIONS h.	SCHEDULES i.	STATEMENTS j.	REPORTS k.	CERTIFICATES l.	SAMPLES m.	RECORDS n.	O&M MANUALS o.	CLASSI-FICATION: INFORMATION ONLY p.	GOVERNMENT APPROVED q.	REVIEWER r.	CONTRACTOR SCHEDULE DATES: SUBMIT s.	APPROVAL NEEDED BY t.	MATERIAL NEEDED BY u.	CONTRACTOR ACTION: CODE v.	DATE w.	SUBMIT TO GOVERN-MENT x.	GOVERNMENT ACTION: CODE y.	DATE z.	REMARKS aa.
			1.3	Materials	X																					
			1.3	[GA]	X																					
			1.3	Materials		X																				
			1.3	[GA]		X																				
			1.3	Materials							X															
			1.3	[GA]							X															

SUBMITTAL REGISTER
(ER 415 1-10)

CONTRACT NO.

TITLE AND LOCATION
CONSOLIDATED MAINTENANCE FACILITY

CONTRACTOR

SPECIFICATION SECTION
13100

ACTIVITY NO. a.	TRANS-MITTAL NO. b.	ITEM NO c.	SPECIFICATION PARAGRAPH NUMBER d.	DESCRIPTION OF ITEM SUBMITTED e.	TYPE OF SUBMITTAL: DATA f.	DRAWINGS g.	INSTRUCTIONS h.	SCHEDULES i.	STATEMENTS j.	REPORTS k.	CERTIFICATES l.	SAMPLES m.	RECORDS n.	O&M MANUALS o.	CLASSIFICATION: INFORMATION ONLY p.	GOVERNMENT APPROVED q.	REVIEWER r.	CONTRACTOR SCHEDULE DATES: SUBMIT s.	APPROVAL NEEDED BY t.	MATERIAL NEEDED BY u.	CONTRACTOR ACTION: CODE v.	DATE w.	SUBMIT TO GOVERN-MENT x.	GOVERNMENT ACTION: CODE y.	DATE z.	REMARKS aa.
			1.3	Lightning Protection System		X										X										
			1.3	Materials and Equipment							X					X										

SUBMITTAL REGISTER
(ER 415 1-10)

CONTRACT NO.

TITLE AND LOCATION
CONSOLIDATED MAINTENANCE FACILITY

CONTRACTOR

SPECIFICATION SECTION
14602

ACTIVITY NO. a.	TRANS-MITTAL NO. b.	ITEM NO. c.	SPECIFICATION PARAGRAPH NUMBER d.	DESCRIPTION OF ITEM SUBMITTED e.	TYPE OF SUBMITTAL: DATA f.	DRAWINGS g.	INSTRUCTIONS h.	SCHEDULES i.	STATEMENTS j.	REPORTS k.	CERTIFICATES l.	SAMPLES m.	RECORDS n.	O&M MANUALS o.	CLASSI-FICATION: INFORMATION ONLY p.	GOVERNMENT APPROVED q.	REVIEWER r.	CONTRACTOR SCHEDULE DATES: SUBMIT s.	APPROVAL NEEDED BY t.	MATERIAL NEEDED BY u.	CONTRACTOR ACTION: CODE v.	DATE w.	SUBMIT TO GOVERN-MENT x.	GOVERNMENT ACTION: CODE y.	DATE z.	REMARKS aa.
			1.3	Hoist System	X											X										
			1.3	Spare Parts	X										X											
			1.3	Wiring and Schematic diagrams		X										X										
			1.3	Hoist System			X								X											
			3.3	Electrification System Tests						X						X										
			3.4	Acceptance Testing						X					X											
			1.3	Hoist							X				X											
			1.3	Hoist Trolley and Track							X				X											
			1.3	Hoist Control							X				X											
			1.3	Sample Hoist							X				X											
			1.3	Thermal Monitoring of Motor							X				X											
				Components																						
			1.3	Electric Hoists							X				X											
			1.3	Trolleys							X				X											
			1.3	Wiring							X				X											
			1.3	Contact Conductors							X				X											
			1.3	Controls							X				X											
			1.3	Overcurrent Protection							X				X											
			1.3	Grounding							X				X											
			1.3	Hook Material									X		X											
			1.3	Heat Treatment									X		X											
			1.3	Operation Manuals										X		X										
			1.3	Maintenance Manuals										X		X										

SUBMITTAL REGISTER
(ER 415 1-10)

CONTRACT NO.

TITLE AND LOCATION
CONSOLIDATED MAINTENANCE FACILITY

CONTRACTOR

SPECIFICATION SECTION
15080

ACTIVITY NO. a.	TRANS-MITTAL NO. b.	ITEM NO c.	SPECIFICATION PARAGRAPH NUMBER d.	DESCRIPTION OF ITEM SUBMITTED e.	TYPE OF SUBMITTAL: DATA f.	DRAWINGS g.	INSTRUCTIONS h.	SCHEDULES i.	STATEMENTS j.	REPORTS k.	CERTIFICATES l.	SAMPLES m.	RECORDS n.	O&M MANUALS o.	CLASSI-FICATION: INFORMATION ONLY p.	GOVERNMENT APPROVED q.	REVIEWER r.	CONTRACTOR SCHEDULE DATES: SUBMIT s.	APPROVAL NEEDED BY t.	MATERIAL NEEDED BY u.	CONTRACTOR ACTION: CODE v.	DATE w.	SUBMIT TO GOVERN-MENT x.	GOVERNMENT ACTION: CODE y.	DATE z.	REMARKS aa.
			1.4	Thermal Insulation Materials								X				X										

SUBMITTAL REGISTER
(ER 415 1-10)

CONTRACT NO.

TITLE AND LOCATION
CONSOLIDATED MAINTENANCE FACILITY

CONTRACTOR

SPECIFICATION SECTION
15330

ACTIVITY NO. a.	TRANS-MITTAL NO. b.	ITEM NO. c.	SPECIFICATION PARAGRAPH NUMBER d.	DESCRIPTION OF ITEM SUBMITTED e.	TYPE OF SUBMITTAL: DATA f.	DRAWINGS g.	INSTRUCTIONS h.	SCHEDULES i.	STATEMENTS j.	REPORTS k.	CERTIFICATES l.	SAMPLES m.	RECORDS n.	O&M MANUALS o.	CLASSI-FICATION: INFORMATION ONLY p.	GOVERNMENT APPROVED q.	REVIEWER r.	CONTRACTOR SCHEDULE DATES: SUBMIT s.	APPROVAL NEEDED BY t.	MATERIAL NEEDED BY u.	CONTRACTOR ACTION: CODE v.	DATE w.	SUBMIT TO GOVERN-MENT x.	GOVERNMENT ACTION: CODE y.	DATE z.	REMARKS aa.
			1.3	Load Calculations for Sizing Sway	X																					
				Bracing																						
			1.3	Sprinkler System Equipment	X											X										
			1.4	Hydraulic Calculations	X											X										
			1.3	Spare Parts	X											X										
			1.3	Sprinkler System Shop Drawings		X										X										
			1.3	As-Built Drawings		X										X										
			1.3	Test Procedures			X									X										
			1.3	Preliminary Tests				X								X										
			1.3	Final Test				X								X										
			1.6	Installer Qualifications					X							X										
			1.5	Submittal Preparer's Qualifications					X							X										
			1.3	Contractor's Material & Test							X					X										
				Certificates																						
			1.3	Sprinkler System										X		X										

SUBMITTAL REGISTER
(ER 415 1-10)

CONTRACT NO.

TITLE AND LOCATION
CONSOLIDATED MAINTENANCE FACILITY

CONTRACTOR

SPECIFICATION SECTION
15400

ACTIVITY NO. a.	TRANS-MITTAL NO. b.	ITEM NO. c.	SPECIFICATION PARAGRAPH NUMBER d.	DESCRIPTION OF ITEM SUBMITTED e.	TYPE OF SUBMITTAL: DATA f.	DRAWINGS g.	INSTRUCTIONS h.	SCHEDULES i.	STATEMENTS j.	REPORTS k.	CERTIFICATES l.	SAMPLES m.	RECORDS n.	O&M MANUALS o.	CLASSIFICATION: INFORMATION ONLY p.	GOVERNMENT APPROVED q.	REVIEWER r.	CONTRACTOR SCHEDULE DATES: SUBMIT s.	APPROVAL NEEDED BY t.	MATERIAL NEEDED BY u.	CONTRACTOR ACTION: CODE v.	DATE w.	SUBMIT TO GOVERN-MENT x.	GOVERNMENT ACTION: CODE y.	DATE z.	REMARKS aa.
			1.5	Welding	X											X										
			1.5	Vibration-Absorbing Features	X											X										
			1.5	Plumbing System		X										X										
			1.5	Electrical Schematics		X										X										
			1.5	Plumbing System			X									X										
			3.9	Tests, Flushing and Sterilization						X						X										
			1.5	Backflow Prevention Assembly Tests						X					X											
			1.5	Materials and Equipment							X					X										
			1.5	Bolts							X					X										
			1.5	Plumbing System										X		X										

SUBMITTAL REGISTER
(ER 415 1-10)

CONTRACT NO.

TITLE AND LOCATION
CONSOLIDATED MAINTENANCE FACILITY

CONTRACTOR

SPECIFICATION SECTION
15488

ACTIVITY NO. a.	TRANS-MITTAL NO. b.	ITEM NO. c.	SPECIFICATION PARAGRAPH NUMBER d.	DESCRIPTION OF ITEM SUBMITTED e.	TYPE OF SUBMITTAL: DATA f.	DRAWINGS g.	INSTRUCTIONS h.	SCHEDULES i.	STATEMENTS j.	REPORTS k.	CERTIFICATES l.	SAMPLES m.	RECORDS n.	O&M MANUALS o.	CLASSIFICATION: INFORMATION ONLY p.	GOVERNMENT APPROVED q.	REVIEWER r.	CONTRACTOR SCHEDULE DATES: SUBMIT s.	APPROVAL NEEDED BY t.	MATERIAL NEEDED BY u.	CONTRACTOR ACTION: CODE v.	DATE w.	SUBMIT TO GOVERN-MENT x.	GOVERNMENT ACTION: CODE y.	DATE z.	REMARKS aa.
			1.3	Qualifications	X											X										
			1.3	Gas Piping System		X										X										

SUBMITTAL REGISTER
(ER 415 1-10)

CONTRACT NO.

TITLE AND LOCATION
CONSOLIDATED MAINTENANCE FACILITY

CONTRACTOR

SPECIFICATION SECTION
15565

ACTIVITY NO. a.	TRANS-MITTAL NO. b.	ITEM NO. c.	SPECIFICATION PARAGRAPH NUMBER d.	DESCRIPTION OF ITEM SUBMITTED e.	TYPE OF SUBMITTAL: DATA f.	DRAWINGS g.	INSTRUCTIONS h.	SCHEDULES i.	STATEMENTS j.	REPORTS k.	CERTIFICATES l.	SAMPLES m.	RECORDS n.	O&M MANUALS o.	CLASSI-FICATION: INFORMATION ONLY p.	GOVERNMENT APPROVED q.	REVIEWER r.	CONTRACTOR SCHEDULE DATES: SUBMIT s.	APPROVAL NEEDED BY t.	MATERIAL NEEDED BY u.	CONTRACTOR ACTION: CODE v.	DATE w.	SUBMIT TO GOVERN-MENT x.	GOVERNMENT ACTION: CODE y.	DATE z.	REMARKS aa.
			1.2	Heating System	X											X										
			1.2	Heating System		X										X										
			1.2	Heating System			X									X										
			3.2	Testing, Adjusting, and Balancing						X						X										

SUBMITTAL REGISTER
(ER 415 1-10)

CONTRACT NO.

TITLE AND LOCATION
CONSOLIDATED MAINTENANCE FACILITY

CONTRACTOR

SPECIFICATION SECTION
15653

ACTIVITY NO. a.	TRANS-MITTAL NO. b.	ITEM NO. c.	SPECIFICATION PARAGRAPH NUMBER d.	DESCRIPTION OF ITEM SUBMITTED e.	TYPE OF SUBMITTAL: DATA f.	DRAWINGS g.	INSTRUCTIONS h.	SCHEDULES i.	STATEMENTS j.	REPORTS k.	CERTIFICATES l.	SAMPLES m.	RECORDS n.	O&M MANUALS o.	CLASSIFICATION: INFORMATION ONLY p.	GOVERNMENT APPROVED q.	REVIEWER r.	CONTRACTOR SCHEDULE DATES: SUBMIT s.	APPROVAL NEEDED BY t.	MATERIAL NEEDED BY u.	CONTRACTOR ACTION: CODE v.	DATE w.	SUBMIT TO GOVERN-MENT x.	GOVERNMENT ACTION: CODE y.	DATE z.	REMARKS aa.
			1.2	Air-Conditioning/Gas Heat System	X											X										
			1.2	Spare Parts Data	X											X										
			1.2	Air-Conditioning/Gas Heat System		X										X										
			3.1.19	Framed Instructions			X								X											
			3.2	Tests				X							X											
			3.5	Demonstrations				X								X										
			1.3	Qualifications					X							X										
			1.5.1	Verification of Dimensions					X						X											
			3.2	Tests						X						X										
			3.2.6	System Performance Tests						X						X										
			3.3	Inspections						X						X										
			1.2	Air-Conditioning/Gas Heat System							X					X										
			1.2	Service Organizations							X					X										
			1.2	Operation Manual										X		X										
			1.2	Maintenance Manual										X		X										

SUBMITTAL REGISTER
(ER 415 1-10)

CONTRACT NO.

TITLE AND LOCATION
CONSOLIDATED MAINTENANCE FACILITY

CONTRACTOR

SPECIFICATION SECTION
15895

ACTIVITY NO. a.	TRANS-MITTAL NO. b.	ITEM NO. c.	SPECIFICATION PARAGRAPH NUMBER d.	DESCRIPTION OF ITEM SUBMITTED e.	TYPE OF SUBMITTAL: DATA f.	DRAWINGS g.	INSTRUCTIONS h.	SCHEDULES i.	STATEMENTS j.	REPORTS k.	CERTIFICATES l.	SAMPLES m.	RECORDS n.	O&M MANUALS o.	CLASSIFICATION: INFORMATION ONLY p.	GOVERNMENT APPROVED q.	REVIEWER r.	CONTRACTOR SCHEDULE DATES: SUBMIT s.	APPROVAL NEEDED BY t.	MATERIAL NEEDED BY u.	CONTRACTOR ACTION: CODE v.	DATE w.	SUBMIT TO GOVERN-MENT x.	GOVERNMENT ACTION: CODE y.	DATE z.	REMARKS aa.
			1.4	Components and Equipment Data	X											X										
			1.4	Air Supply, Distribution, Ventilation,		X										X										
				and Exhaust Equipment																						
			1.4	Test Procedures			X									X										
			1.4	Welding Procedures			X									X										
			1.4	System Diagrams			X									X										
			1.4	Test Schedules				X								X										
			1.4	Field Training Schedule				X								X										
			1.4	Similar Services					X							X										
			1.4	Welding Qualification					X							X										
			1.4	Test Reports						X						X										
			1.4	Bolts							X					X										
			1.4	Air Supply, Distribution, Ventilation,										X		X										
				and Exhaust Manuals																						

SUBMITTAL REGISTER
(ER 415 1-10)

CONTRACT NO.

TITLE AND LOCATION
CONSOLIDATED MAINTENANCE FACILITY

CONTRACTOR

SPECIFICATION SECTION
15940

ACTIVITY NO. a.	TRANS-MITTAL NO. b.	ITEM NO. c.	SPECIFICATION PARAGRAPH NUMBER d.	DESCRIPTION OF ITEM SUBMITTED e.	TYPE OF SUBMITTAL: DATA f.	DRAWINGS g.	INSTRUCTIONS h.	SCHEDULES i.	STATEMENTS j.	REPORTS k.	CERTIFICATES l.	SAMPLES m.	RECORDS n.	O&M MANUALS o.	CLASSIFICATION: INFORMATION ONLY p.	GOVERNMENT APPROVED q.	REVIEWER r.	CONTRACTOR SCHEDULE DATES: SUBMIT s.	APPROVAL NEEDED BY t.	MATERIAL NEEDED BY u.	CONTRACTOR ACTION: CODE v.	DATE w.	SUBMIT TO GOVERN-MENT x.	GOVERNMENT ACTION: CODE y.	DATE z.	REMARKS aa.
			3.1.1	Exhaust System	X											X										
			3.1.1	Exhaust System		X										X										
			3.1.1	Exhaust System			X									X										
			3.3	Tests						X						X										

SUBMITTAL REGISTER
(ER 415 1-10)

CONTRACT NO.

TITLE AND LOCATION
CONSOLIDATED MAINTENANCE FACILITY

CONTRACTOR

SPECIFICATION SECTION
15990

ACTIVITY NO. a.	TRANS-MITTAL NO. b.	ITEM NO. c.	SPECIFICATION PARAGRAPH NUMBER d.	DESCRIPTION OF ITEM SUBMITTED e.	TYPE OF SUBMITTAL: DATA f.	DRAWINGS g.	INSTRUCTIONS h.	SCHEDULES i.	STATEMENTS j.	REPORTS k.	CERTIFICATES l.	SAMPLES m.	RECORDS n.	O&M MANUALS o.	CLASSIFICATION: INFORMATION ONLY p.	GOVERNMENT APPROVED q.	REVIEWER r.	CONTRACTOR SCHEDULE DATES: SUBMIT s.	APPROVAL NEEDED BY t.	MATERIAL NEEDED BY u.	CONTRACTOR ACTION: CODE v.	DATE w.	SUBMIT TO GOVERN-MENT x.	GOVERNMENT ACTION: CODE y.	DATE z.	REMARKS aa.
			1.2	TAB Related HVAC Submittals	X										X		GA									
			1.2	TAB Schematic Drawings and Report		X										X										
				Forms																						
			1.2	TAB Procedures			X									X										
			1.2	Systems Readiness Check				X							X											
			1.2	TAB Execution				X								X										
			1.2	TAB Verification				X								X										
			1.2	TAB Firm					X							X										
			1.2	TAB Specialist					X							X										
			1.2	Instrument Calibration					X						X											
			1.2	Design Review Report						X						X										
			1.2	Systems Readiness Check Report						X						X										
			1.2	TAB Report						X						X										
			1.2	TAB Verification Report						X						X										
			1.2	Ductwork Leak Testing							X				X		GA									

SUBMITTAL REGISTER
(ER 415 1-10)

CONTRACT NO.

TITLE AND LOCATION
CONSOLIDATED MAINTENANCE FACILITY

CONTRACTOR

SPECIFICATION SECTION
15995

ACTIVITY NO. a.	TRANS-MITTAL NO. b.	ITEM NO. c.	SPECIFICATION PARAGRAPH NUMBER d.	DESCRIPTION OF ITEM SUBMITTED e.	TYPE OF SUBMITTAL: DATA f.	DRAWINGS g.	INSTRUCTIONS h.	SCHEDULES i.	STATEMENTS j.	REPORTS k.	CERTIFICATES l.	SAMPLES m.	RECORDS n.	O&M MANUALS o.	CLASSIFICATION: INFORMATION ONLY p.	GOVERNMENT APPROVED q.	REVIEWER r.	CONTRACTOR SCHEDULE DATES: SUBMIT s.	APPROVAL NEEDED BY t.	MATERIAL NEEDED BY u.	CONTRACTOR ACTION: CODE v.	DATE w.	SUBMIT TO GOVERN-MENT x.	GOVERNMENT ACTION: CODE y.	DATE z.	REMARKS aa.
			1.1	Commissioning Team	X											X										
			1.1	Test Procedures			X									X										
			1.1	Test Schedule				X								X										
			1.1	Test Reports						X						X										

SUBMITTAL REGISTER
(ER 415 1-10)

CONTRACT NO.

TITLE AND LOCATION
CONSOLIDATED MAINTENANCE FACILITY

CONTRACTOR

SPECIFICATION SECTION
16370

ACTIVITY NO. a.	TRANS-MITTAL NO. b.	ITEM NO. c.	SPECIFICATION PARAGRAPH NUMBER d.	DESCRIPTION OF ITEM SUBMITTED e.	TYPE OF SUBMITTAL: DATA f.	DRAWINGS g.	INSTRUCTIONS h.	SCHEDULES i.	STATEMENTS j.	REPORTS k.	CERTIFICATES l.	SAMPLES m.	RECORDS n.	O&M MANUALS o.	CLASSI-FICATION: INFORMATION ONLY p.	GOVERNMENT APPROVED q.	REVIEWER r.	CONTRACTOR SCHEDULE DATES: SUBMIT s.	APPROVAL NEEDED BY t.	MATERIAL NEEDED BY u.	CONTRACTOR ACTION: CODE v.	DATE w.	SUBMIT TO GOVERN-MENT x.	GOVERNMENT ACTION: CODE y.	DATE z.	REMARKS aa.
			1.3	Manufacturer's Catalog	X											X										
			1.3	As-Built Drawings		X									X											

SUBMITTAL REGISTER
(ER 415 1-10)

CONTRACT NO.

TITLE AND LOCATION
CONSOLIDATED MAINTENANCE FACILITY

CONTRACTOR

SPECIFICATION SECTION
16375

ACTIVITY NO. a.	TRANS-MITTAL NO. b.	ITEM NO. c.	SPECIFICATION PARAGRAPH NUMBER d.	DESCRIPTION OF ITEM SUBMITTED e.	TYPE OF SUBMITTAL: DATA f.	DRAWINGS g.	INSTRUCTIONS h.	SCHEDULES i.	STATEMENTS j.	REPORTS k.	CERTIFICATES l.	SAMPLES m.	RECORDS n.	O&M MANUALS o.	CLASSIFICATION: INFORMATION ONLY p.	GOVERNMENT APPROVED q.	REVIEWER r.	CONTRACTOR SCHEDULE DATES: SUBMIT s.	APPROVAL NEEDED BY t.	MATERIAL NEEDED BY u.	CONTRACTOR ACTION: CODE v.	DATE w.	SUBMIT TO GOVERN-MENT x.	GOVERNMENT ACTION: CODE y.	DATE z.	REMARKS aa.
			1.3	Fault Current and Protective Devices	X											X										
				Coordination Studies																						
			1.3	Manufacturer's Catalog Data	X											X										
			1.3	Material, Equipment, and Fixture	X										X											
				Lists																						
			1.3	Installation Procedures	X											X										
			1.3	Electrical Distribution System		X										X										
			1.3	As-Built Drawings		X										X										
			1.3	Factory Test						X						X										
			1.3	Field Testing						X						X										
			1.3	Test Reports						X						X										
			1.3	Cable Installation Reports						X						X										
			1.3	Materials and Equipment							X					X										
			1.3	Cable Splicer Qualification							X					X										
			1.3	Cable Installer Qualifications							X					X										
			1.3	Electrical Distribution System										X		X										

SUBMITTAL REGISTER
(ER 415 1-10)

CONTRACT NO.

TITLE AND LOCATION
CONSOLIDATED MAINTENANCE FACILITY

CONTRACTOR

SPECIFICATION SECTION
16415

ACTIVITY NO a.	TRANS-MITTAL NO. b.	ITEM NO c.	SPECIFICATION PARAGRAPH NUMBER d.	DESCRIPTION OF ITEM SUBMITTED e.	TYPE OF SUBMITTAL: DATA f.	DRAWINGS g.	INSTRUCTIONS h.	SCHEDULES i.	STATEMENTS j.	REPORTS k.	CERTIFICATES l.	SAMPLES m.	RECORDS n.	O&M MANUALS o.	CLASSIFICATION: INFORMATION ONLY p.	GOVERNMENT APPROVED q.	REVIEWER r.	CONTRACTOR SCHEDULE DATES: SUBMIT s.	APPROVAL NEEDED BY t.	MATERIAL NEEDED BY u.	CONTRACTOR ACTION: CODE v.	DATE w.	SUBMIT TO GOVERN-MENT x.	GOVERNMENT ACTION: CODE y.	DATE z.	REMARKS aa.
			1.3	Fault Current and Protective Device	X											X										
				Coordination Study																						
			1.3	Manufacturer's Catalog	X											X										
			1.3	Material, Equipment, and Fixture	X										X											
				Lists																						
			1.3	Interior Electrical Equipment		X										X										
			1.3	As-Built Drawings		X										X										
			1.3	On-Site Test					X							X										
			1.3	Factory Test Reports						X						X										
			1.3	Field Test Plan						X						X										
			1.3	Field Test Reports						X						X										
			1.3	Materials and Equipment							X					X										

SUBMITTAL REGISTER
(ER 415 1-10)

CONTRACT NO.

TITLE AND LOCATION
CONSOLIDATED MAINTENANCE FACILITY

CONTRACTOR

SPECIFICATION SECTION
16528

ACTIVITY NO. a.	TRANS-MITTAL NO. b.	ITEM NO. c.	SPECIFICATION PARAGRAPH NUMBER d.	DESCRIPTION OF ITEM SUBMITTED e.	TYPE OF SUBMITTAL: DATA f.	DRAWINGS g.	INSTRUCTIONS h.	SCHEDULES i.	STATEMENTS j.	REPORTS k.	CERTIFICATES l.	SAMPLES m.	RECORDS n.	O&M MANUALS o.	CLASSIFICATION: INFORMATION ONLY p.	GOVERNMENT APPROVED q.	REVIEWER r.	CONTRACTOR SCHEDULE DATES: SUBMIT s.	APPROVAL NEEDED BY t.	MATERIAL NEEDED BY u.	CONTRACTOR ACTION: CODE v.	DATE w.	SUBMIT TO GOVERN-MENT x.	GOVERNMENT ACTION: CODE y.	DATE z.	REMARKS aa.
			1.4	Equipment and Materials	X											X										
			1.4	Lighting System		X										X										
			1.4	As-Built Drawings		X									X											
			1.4	Operating Test						X						X										
			1.4	Ground Resistance Measurements						X						X										
			1.4	Lighting System										X		X										

SUBMITTAL REGISTER
(ER 415 1-10)

CONTRACT NO.

TITLE AND LOCATION
CONSOLIDATED MAINTENANCE FACILITY

CONTRACTOR

SPECIFICATION SECTION
16710

ACTIVITY NO. a.	TRANS-MITTAL NO. b.	ITEM NO. c.	SPECIFICATION PARAGRAPH NUMBER d.	DESCRIPTION OF ITEM SUBMITTED e.	TYPE OF SUBMITTAL: DATA f.	DRAWINGS g.	INSTRUCTIONS h.	SCHEDULES i.	STATEMENTS j.	REPORTS k.	CERTIFICATES l.	SAMPLES m.	RECORDS n.	O&M MANUALS o.	CLASSIFICATION: INFORMATION ONLY p.	GOVERNMENT APPROVED q.	REVIEWER r.	CONTRACTOR SCHEDULE DATES: SUBMIT s.	APPROVAL NEEDED BY t.	MATERIAL NEEDED BY u.	CONTRACTOR ACTION: CODE v.	DATE w.	SUBMIT TO GOVERN-MENT x.	GOVERNMENT ACTION: CODE y.	DATE z.	REMARKS aa.
			1.5	Spare Parts	X										X											
			1.5	Premises Distribution System		X										X										
			1.5	Record Drawings		X										X										
			1.5	Manufacturer's Recommendations			X									X										
			1.5	Test Plan					X							X										
			1.4	Qualifications					X							X										
			1.5	Test Reports						X						X										
			1.5	Premises Distribution System							X					X										
			2.1	Materials and Equipment							X					X										
			1.5	Installers							X					X										
			1.8	Record Keeping and Documentation									X			X										

SUBMITTAL REGISTER
(ER 415 1-10)

CONTRACT NO.

TITLE AND LOCATION
CONSOLIDATED MAINTENANCE FACILITY

CONTRACTOR

SPECIFICATION SECTION
16711

ACTIVITY NO. a.	TRANS-MITTAL NO. b.	ITEM NO. c.	SPECIFICATION PARAGRAPH NUMBER d.	DESCRIPTION OF ITEM SUBMITTED e.	TYPE OF SUBMITTAL: DATA f.	DRAWINGS g.	INSTRUCTIONS h.	SCHEDULES i.	STATEMENTS j.	REPORTS k.	CERTIFICATES l.	SAMPLES m.	RECORDS n.	O&M MANUALS o.	CLASSIFICATION: INFORMATION ONLY p.	GOVERNMENT APPROVED q.	REVIEWER r.	CONTRACTOR SCHEDULE DATES: SUBMIT s.	APPROVAL NEEDED BY t.	MATERIAL NEEDED BY u.	CONTRACTOR ACTION: CODE v.	DATE w.	SUBMIT TO GOVERN-MENT x.	GOVERNMENT ACTION: CODE y.	DATE z.	REMARKS aa.
			1.2	Telephone System		X										X										
			1.2	Test Plans					X							X										
			3.4	Acceptance Tests						X						X										
			1.2	Installation Procedures						X						X										
			1.2	Telephone System							X					X										

SUBMITTAL REGISTER
(ER 415 1-10)

CONTRACT NO.

TITLE AND LOCATION
CONSOLIDATED MAINTENANCE FACILITY

CONTRACTOR

SPECIFICATION SECTION
16721

ACTIVITY NO. a.	TRANS-MITTAL NO. b.	ITEM NO. c.	SPECIFICATION PARAGRAPH NUMBER d.	DESCRIPTION OF ITEM SUBMITTED e.	TYPE OF SUBMITTAL: DATA f.	DRAWINGS g.	INSTRUCTIONS h.	SCHEDULES i.	STATEMENTS j.	REPORTS k.	CERTIFICATES l.	SAMPLES m.	RECORDS n.	O&M MANUALS o.	CLASSIFICATION: INFORMATION ONLY p.	GOVERNMENT APPROVED q.	REVIEWER r.	CONTRACTOR SCHEDULE DATES: SUBMIT s.	APPROVAL NEEDED BY t.	MATERIAL NEEDED BY u.	CONTRACTOR ACTION: CODE v.	DATE w.	SUBMIT TO GOVERN-MENT x.	GOVERNMENT ACTION: CODE y.	DATE z.	REMARKS aa.
			1.4	Battery	X											X										
			1.4	Voltage Drop	X										X											
			1.4	Spare Parts	X										X											
			1.4	Qualifications	X											X										
			1.4	Training		X										X										
			1.4	Test Procedures					X							X										
			1.4	Testing						X						X										
			1.4	Equipment							X					X										
			1.4	Installer							X					X										

PROJECT TABLE OF CONTENTS

DIVISION 00 - SPECIAL CONTRACT REQUIREMENTS

00700 CONTRACT CLAUSES
00800 SPECIAL CONTRACT REQUIREMENTS

DIVISION 01 - GENERAL REQUIREMENTS

01080 SOURCES FOR METRIC PRODUCTS
01090 SOURCES FOR REFERENCE PUBLICATIONS
01200 CONTRACTOR WARRANTY MANAGEMENT
01330 SUBMITTAL PROCEDURES
01356 STORM WATER POLLUTION PREVENTION MEASURES
01410 ENVIRONMENT PROTECTION
01451 CONTRACTOR QUALITY CONTROL
01452 TESTING FOR MECHANICAL AND ELECTRICAL SYSTEMS
01500 TEMPORARY CONSTRUCTION FACILITIES

DIVISION 02 - SITE WORK

02050 DEMOLITION
02080 ASBESTOS ABATEMENT
02090 REMOVAL AND DISPOSAL OF LEAD CONTAINING PAINTED MATERIALS
02120 TRANSPORTATION AND DISPOSAL OF HAZARDOUS MATERIALS
02221 EXCAVATION, FILLING AND BACKFILLING FOR BUILDINGS
02225 EARTHWORK FOR ROADWAYS, RAILROADS, AND AIRFIELDS
02233 GRADED-CRUSHED-AGGREGATE BASE COURSE
02316 EXCAVATION, TRENCHING, AND BACKFILLING FOR UTILITIES SYSTEMS
02511 CONCRETE SIDEWALKS AND CURB AND GUTTERS
02551 BITUMINOUS PAVING FOR ROADS, STREETS AND OPEN STORAGE AREAS
02558 BITUMINOUS TACK AND PRIME COATS
02580 PAVEMENT MARKINGS
02660 WATER DISTRIBUTION SYSTEM
02685 GAS DISTRIBUTION SYSTEM
02714 DRAINAGE LAYER
02720 STORM-DRAINAGE SYSTEM
02730 SANITARY SEWERS
02754 CONCRETE PAVEMENTS FOR SMALL PROJECTS
02821 FENCING
02935 TURF

DIVISION 03 - CONCRETE

03100 STRUCTURAL CONCRETE FORMWORK
03200 CONCRETE REINFORCEMENT
03250 EXPANSION JOINTS, CONTRACTION JOINTS, AND WATERSTOPS

03300 CAST-IN-PLACE STRUCTURAL CONCRETE

DIVISION 04 - MASONRY

04200 MASONRY

DIVISION 05 - METALS

05120 STRUCTURAL STEEL
05210 STEEL JOISTS
05300 STEEL DECKING
05500 MISCELLANEOUS METAL

DIVISION 06 - WOODS & PLASTICS

06100 ROUGH CARPENTRY

DIVISION 07 - THERMAL & MOISTURE PROTECTION

07220 ROOF INSULATION
07412 NON-STRUCTURAL METAL ROOFING
07413 METAL SIDING
07600 SHEET METALWORK, GENERAL
07840 FIRESTOPPING
07900 JOINT SEALING

DIVISION 08 - DOORS & WINDOWS

08110 STEEL DOORS AND FRAMES
08120 ALUMINUM DOORS AND FRAMES
08330 OVERHEAD ROLLING DOORS
08520 ALUMINUM WINDOWS
08700 BUILDERS' HARDWARE
08810 GLASS AND GLAZING

DIVISION 09 - FINISHES

09250 GYPSUM WALLBOARD
09310 CERAMIC TILE
09510 ACOUSTICAL CEILINGS
09650 RESILIENT FLOORING
09900 PAINTING, GENERAL

DIVISION 10 - SPECIALTIES

10100 VISUAL COMMUNICATIONS SPECIALTIES
10160 TOILET PARTITIONS
10211 FIXED METAL WALL LOUVERS
10430 EXTERIOR SIGNAGE
10440 INTERIOR SIGNAGE
10522 FIRE EXTINGUISHERS, CABINETS, AND ACCESSORIES
10800 TOILET ACCESSORIES
10900 MANUFACTURED WARDROBES

DIVISION 12 - FURNISHINGS

12320 CABINETS AND COUNTERTOPS
12490 WINDOW TREATMENT

DIVISION 13 - SPECIAL CONSTRUCTION

13080 SEISMIC PROTECTION FOR MECHANICAL AND ELECTRICAL EQUIPMENT
13090 X-RAY SHIELDING
13100 LIGHTNING PROTECTION SYSTEM
13120 STANDARD METAL BUILDING SYSTEMS

DIVISION 14 - CONVEYING SYSTEMS

14602 CRANES, SINGLE-GIRDER BRIDGE, MONORAIL AND JIB

DIVISION 15 - MECHANICAL

15080 THERMAL INSULATION FOR MECHANICAL SYSTEMS
15330 WET PIPE SPRINKLER SYSTEM, FIRE PROTECTION
15400 PLUMBING, GENERAL PURPOSE
15488 GAS PIPING SYSTEM
15565 HEATING SYSTEM; GAS-FIRED HEATERS
15653 AIR-CONDITIONING SYSTEM (UNITARY TYPE)
15895 AIR SUPPLY, DISTRIBUTION, VENTILATION, AND EXHAUST SYSTEM
15940 OVERHEAD VEHICLE TAILPIPE [AND WELDING FUME] EXHAUST SYSTEM(S)
15951 DIRECT DIGITAL CONTROL FOR HVAC
15990 TESTING, ADJUSTING, AND BALANCING OF HVAC SYSTEMS
15995 COMMISSIONING OF HVAC SYSTEMS

DIVISION 16 - ELECTRICAL

16370 ELECTRICAL DISTRIBUTION SYSTEM, AERIAL
16375 ELECTRICAL DISTRIBUTION SYSTEM, UNDERGROUND
16415 ELECTRICAL WORK, INTERIOR

16528 EXTERIOR LIGHTING INCLUDING SECURITY AND CCTV APPLICATIONS
16710 PREMISES DISTRIBUTION SYSTEM
16711 TELEPHONE SYSTEM, OUTSIDE PLANT
16721 FIRE DETECTION AND ALARM SYSTEM

-- End of Project Table of Contents --

SECTION 01080

SOURCES FOR METRIC PRODUCTS

PART 1 GENERAL

1.1 Access Floor

Following firms made access floor.

Interface AR	R.A. Coffey, Cinci, OH
Don Heeney	Tom Bougie
616-243-2211	513-631-1711

Tate Access Floor MD
Bill Reinolds
410-799-4200

USG Interiors/Donn IL
Chuck Capperine
312-606-4190

Interface GA
Only size is 500 x 500 intended for wire management applications.
Lew Engle, Peter LaPage
800-336-0225

1.2 Air Diffusers and Grilles

Acutherm CA
Manufacturer of VAV air distribution devices, can make metric sizes.
Caroline
510-785-0510

Aireguide FL
A large air products mfr, can make 80-90% of its products in metric sizes.
Daryl Gray
305-888-1631

Carnes WI
A large mfr, often makes metric sizes.
Dick Laughlin
608-845-6411

Donco Air Products IA
Can make light troffer, slot, and lay-in diffusers up to 1500 mm long.
Ron Jansen/Marc Vanedgrift
515-488-2211

Duralast LA
Ron Vinson (Distributor)
504-837-2346

J & J Register TX
Can made hard sizes.
Paul Dana

915-852-9111

Juniper Industries NY
Has made, and can make metric size diffusers and grilles.
Steve Liebermann
718-326-2546

Krueger, Ind. AZ
Can make metric sizes.
Steve Bowser
972-918-8894

Rock Island Register IL
Can make its diffuser in 600 x 600.
John Howarth
309-788-5611

Thermo Kinetics SC
Can make metric grilles and diffusers. No extra cost.
Terry Rutledge
800-268-0697

Titus Products TX
Major mfr. of grilles and diffuser products, indicates a number of products now available in metric sizes.
John Frank
972-699-1030

1.3 Anchor Bolts

These firms can provide metric anchor bolts, threaded rod, and similar material.

AI Nut & Bolt
Victor Villegas
800-5423-4287

Archer-Engineering IL
Ron Lanie
773-247-3501
No minimum quantity.

Atwood Industries OH
Jeff Mueller, James Mraz
800-362-2059
No minimum order. Premium on smaller quantities.

Fansteel Mfg. LA
Dick Humston
800-394-7091
Lists metric threads can be obtained on their anchor bolt products.

High Point Fasteners NJ
Ted Brace
201-293-3411
No minimum quantity.

Hilti OK
Dick Wollmenshauzser

800-879-6000
Offers their HSL metric expansion anchors in M8, M10, M12, M16, M20, and M24.

Kenneth Lilly Fasteners DE
Gary Lilly, Roland Sharp
800-433-1815
No minimum quantity.

O'Brien Iron Works CA
Richard Schulba, Richard Kotalik
510-685-5300
No minimum quantity.

Piping Technology TX
Marion McKnight, Aundrela Durham
713-731-0030
Required minimum order

Richmond Screw Anchor TX
Leroy Caldwell
800-989-2700
No minimum order, premium on orders of 100 bolts or less.

Steel Products/Massillon HO
Mike Friel
800-874-2658
Minimum $50.00 order.

Wayne Bolts MI
Joe or Mike Wojcik
800-521-2207
No minimum quantity.

1.4 Block/CMU

Many firms can supply hard metric block.

Betco Block

Is supplying metric block to GSA. Minimum order is 150 m2.

Betco Block MD, Scott Harper, 800-486-2312
Betco Block PA, Steve Nagel, 800-300-6155
Betco Block VA, Robert Carmody, 800-486-4011

Capital Industries, MI
Manufacturers for Burns and Russell MD
Dick Collins
810-828-3083

Clarkes Block GA
L.E. Wells
912-234-3436

Colorado Concrete Mfg. Co.
Karl Dolder, Thor Kaumeyer
719-390-5477
Paving Stone

Dagostino Building Blocks NY
Ed Carey, Jeff Orvis
518-374-3116

Featherlight Building Products TX
Wade Albritton, H.V. Moss
512-472-2424
Can produce metric block

Grand Blanc Cement MI
Michael Hicks, Ron Hunt
800-875-7500
Can supply metric molds, all shapes

E.P. Henry NJ
Stephen Reale, Mariane Anzaldo
609-845-6200
Paving Stones

Jewell Concrete Products TX
Walter Grisham
817-772-3440
Steve Bickerdike
903-592-0752
Can make metric block.

Superlite Block AZ
Mark Yablowski
520-744-3500
Several hundred block orders acceptable.

Trenwyth Industries PA
Bill Witheron
800-233-1924
Makes many metric block sizes.

Tricon Enterprises MA
Reiner Kuntz
508-697-6112
Paving Blocks

1.5 Block/Glass

Pittsburg Corning PA
Robert McMarlin
412-327-6100
Makes metric glass block. Several patterns. 190 x 190 mm (80 or 100 mm thick)

1.6 Carpet

Interface GA
Scott Landa, Kathy Kerby
800-336-0225
Carpet Tiles. No minimum, but premiums on orders from 1 to 100 m2 orders.

Shaw PA
Sara Jornson, 800-424-7429

Carpet Tiles.

1.7 Ceiling Systems

Armstrong World Industries PA
Tim Traber
717-396-6207
Usually no added cost or lead time for metric sizes.

Celotex Corporation FL
Debbie Morales
813-873-4027
A major tile Mfr, offers an entire product line of hard metric sizes.

Chicago Metallic Corp. IL
Doug Evak
800-323-7164
Makes Metric grids.

National Rolling Mills PA
Rich Mattioni
610-644-6700
Steel Ceilings OH
Lou Heil
614-622-4655
Can make metric perforated and unperforated accoustical metal ceiling panels in steel, aluminum, and stainless.

USG Interiors IL
David Vanosdall
312-606-3804

1.8 Conductors

These firms either have made metric conductors before, or are able to make them.

Americable AR
Noubar Sarkissian
800-643-1516
Produces mm2 sizes, and can supply for US proejcts, (sizes 0.5 to 300 mm2)

American Flexible Conduit MA
Mary Lou Newell
800-225-8588
Has made metric before, can produce mm2 sizes.

Pacific Electricord CA
Beverlly Kokis
310-532-6600
Stocks come 0.75, 1, and 1.5 mm2 product. Can produce other sizes.

Pirelli Cable NJ
Joe Anderson
800-845-8507
Has made mm2 sizes, and produce.

Rome Cable NY
Jan Visser

315-337-3000
Has made mm2 sizes, can produce.

1.9 Curtainwall

These are obtainable in hard metric. This means panel length and width can be any size. Panel extrusions may be hard to change, and may need to be specified in soft metric.

Howard Industries, FL
Bob Voight or Joe Sixto
815-889-4105
A major windowall mfr, has done foreign work, can make metric sizes.

Kalwell Corporation NH
Bruce Keller
800-258-9777
A major curtainwall producer, can make hard metric sizes.

Kawneer Company GA
Edward Bugg, Asst. Engrg Mgr
540-433-2711
A major manufacturer, has been making metric for overseas for years, and can make any metric size.

1.10 Doors/Metal

ACME Steel Door NY
Joseph Licari
718-384-7800

American Steel Products NY
Hank Repperger
516-293-7100
Can make any size metric door.

Amweld Building Products, OH
Fred Bloom, Jr.
800-248-6116
Has made metric before, can make metric sizes.

Ceco Door IN + TN
Emil Kostel
615-661-5030
A major mfr, can make any hard metric size.

Dual Lock OR
Rick Carlton
800-678-0566
Major aluminum products, mfr, can make any metric size.

1.11 Doors/Wood

Many other door manufacturers indicated ability to supply metric doors but did not respond with detailed information prior to publication.

Eagle Plywood and Door Mfr NJ
Tony Schifano
908-769-7650

No Minimum

Marlite OH
Donald Sweitzer
330-343-6621
Can produce.

Mohawk Flush Doors PA
Don Enigk
717-473-3557
No minimum.

Vancouver Door WA
Gary Geppert
206-845-9581

1.12 Gypsum Board

Celotex FL
Christa
813-873-4027

Georgia Pacific GA
Mhomid Ali, Mel Happel
800-225-6119

National Gypsum NC
Jim Allen
800-628-4662

Temple Inland TX
Jim Rush
800-231-6060

USG Interiors IL
Chuck Capperino
312-606-4190

1.13 Elevators

Dover TN
601-393-2110

Montgomery IL
309-764-6771

Otis Elevator SC
803-875-8000

Schindler NJ
201-984-9500

1.14 Floor Tile

Freudenberg MA
Mike Goulette
508-689-0530

Gerbert PA

Bill Neifert
717-299-5035

Roppe OH
800-537-9527

1.15 Lighting Fixtures

We recommend that selection of fixtures be limited to the high volume, commonly used lay-in fixtures, since industry is concerned that the effort associated with converting all products to metric over a short period of time would be difficult, as tooling requires resources and time to construct.

ALP Lighting IL
Don Michaels
773-774-9550
Supplies louvers and lenses to many major US mfrs., can produce these products in any required metric size. ALP has supplied louvers to Germany and England in metric sizes.

American Fluorescent IL
Gary Stabelfeldt
847-249-5970
Can produce the 600 x 600 and 600 x 1200 fixtures. Electronic ballasts available. Parabolic and lensed available. Minimum order is about 500 fixtures.

Bieber Lighting Corporation CA
Bob Beiber, Ron Bieber
800-243-2375 213-776-4744
Can make both 600 x 600 and 600 x 1200 hard metric fixtures. 18 cell parabolics, electronic ballasts, are available.

C.W. Cole & Co. CA
Kevin Brummett
818-443-2473
Can make both 600 x 600 and 600 x 1200 hard metric light fixtures. Parabolic and lensed. Electronic ballasts are available.

Day-O-Lite Manufacturing RI
Steve Weisman
401-467-8232
Can produce the 600 x 600 and 600 x 1200 fixtures. Electronic ballasts available, parabolic and lensed available. No minimum order quantity.

Hasco Electric Corp. CT
Brad Segona
203-531-9400
Can produce the 600 x 600 and 600 x 1200 fixtures. Parabolic, lense and electronic ballasts available. Minimum order is about 20 fixtures.

Holophane OH
Dennise Lohman
614-345-9631
Can provide the 600 x 600 and 600 x 1200 fixtures. Parabolic or lensed available. Electronic ballasts available. Holophane has quoted hard metric inquiries before. Minimum order is probably about 100 fixtures.

Lithonia GA
West Coast: Marcus Cove
818-965-0711
One of the largest US lay-in mfrs, produces hard metric fixtures in its SP, SP(air), Paramax, and Optimax products.

Louisville Lamp Company KY
Mike Davidson
502-964-4094
Is able to supply both the 600 x 600 and 600 x 1200 fixture. Electronic ballasts, parabolics, lensed fixtures available. No minimum quantity.

Lumispec PA
Eric Papougenis
215-228-3830
Can produce both 600 x 600 and 600 x 1200 hard metric fixtures. Parabolics, lensed, and electronic ballasts available. Minimum order is about 30 fixtures.

Mark Lighting NJ
George Miller
800-526-6280
Has made metric fixtures before, can supply both the 600 x 600 and 600 x 1200. Minimum order is about 50 fixtures.

Morlite Equipment PA
Michele Lohder
814-774-9631

Solar Kinetics TX
972-556-2376
Is able to provide the 600 x 600 and 600 x 1200 fixtures. Electronic ballasts available.

USI/Columbia Lighting WA
Mark Johnson
509-924-7000
The second largest fluorescent fixture producer in the country, often produces hard metric sizes, can supply 600 x 600 and 600 x 1200, and can make almost any size metric fixture. Lead times would not normally exceed 8-10 weeks.

1.16 Lumber

Vanport Mfg. OR
Wayne Geist
503-663-4466
90% of production is in hard metric for Japanese and other export markets. Thicknesses 27-120 mm. Widths 45-360 mm.

1.17 Mechanical Equipment

Many major manufacturers of mechanical equipment already have metric literature on their products, are converting literature and product data to metric, or have committed to do so for US metric projects.

American Standard
Ansul Fire Protection
Aurora Pump

Baltimore Air Coil
Carrier Corporation
Central Sprinkler
Dunham-Bush
Hurst Boiler
ITT Bell Gossett
Lendis and Gyr Powers
Liebert, current catalog has metric
Loren Cook Company
Marley Cooling Tower
McQuay
Trane Company
York

1.18 Nuts

These firms can supply nuts for anchor bolts and common construction fasteners.

Century AL
Lynda Oakley
205-772-7300
Can supply metric nuts. Many grades. $50 minimum order.

Coloc TX
Dick Ingram
903-848-8411
Can make up to M116 nuts. Many grades. $50 minimum order.

Fasteners and Metal Products MA
Tom Hatzis
617-489-0414
Can supply metric nuts.

Midwest Bolt and Supply MO
George Nudler
816-842-7880
Can supply metric nuts. $25 minimum.

North Texas Bolt & Nuts TX
John Ricard
972-647-0608
A distributor, can supply metric nuts.

Quality Bolt LA
Pat McGrail
504-923-2607
Can provide orders in the $200-300 range.

Sampson Industries AZ
Brian Saxton, Christine Gruice
602-581-8082

1.19 Plywood

Metric plywood can now be used for items like housing, barracks, sheathing or formwork applications.

Champion Internation FL

Carl Capps
800-874-3240
Makes metric sheet sizes and thicknesses. Metric available for underlayment, sheating, and sanded products. Metric concrete form panels can be ordered. Minimum order is 1 truckload.

Wood International OR
Larry Cleverly
503-297-4738
Can supply 50-100 piece orders.

Murphy Plywood OR
John Murphy, Mark Gryziec
503-459-3225
Can make metric plywood.

Potlatch WA
C.D. Whitney/Mac Ryerse
509-328-0930
Has exported metric, can make metric sizes.

Roseburg Forest Products OR
Dave Adams/Kevin Barry
541-679-3311
Makes 6-19 mm thick plywood, can make metric sheets. Makes other metric wood building products. Minimum order is 1 truckload.

Stone Forest Industries, OR
Lain Osborn, Tom Clow
800-541-6906
Currently produces both metric dimensional and thickness plywood. This firm could produce about two pressloads minimum order (about 60 sheets) but premiums would apply to small orders of this size.

1.20 Rebar

Birmingham Steel AL
Chuck James
Stocks rebar in 10-35 mm. Minimum order is about 20 Mg, or one truckload, which van consist of different sizes, and can be shipped anywhere in the country. Facility ships rebar overseas regularly.

Cascade Steel OR
Glen Peterson
503-472-4181 x 3307
Currently makes 10-35 mm. 45 and 55 mm might require some lead time. When sizes are in stock, minimum order is about 20 Mg, or one truckload, which can be mixed sizes.

Florida Steel FL
Don Ballard, Don Haney
813-251-8811
Can produce A615M bar. Has production in FL, NC, and TN.

Marion Steel OH
Gerry Lehrke, Michael Johnson
614-383-4011
Can make A615M but is not able to make 45 and 55 mm.

New Jersey Steel NJ
Gary Giovannetti, Elaine Skiba
908-721-6600

Nucor Steel UT
R. Wayne Jones
801-458-2300
Can make A615M rebar 400/500 ton minimum order.

1.21 Steel Plate

Metric steel plate is available from US mfrs, and is being specified in hard metric on our projects.

Most firms indicated metric plate is usually not stocked, and would require some additional lead time. Many of these firms could also be consulted for hard metric sheet metal purchase.

Many firms indicated, however, that no order would be too small to supply such as an order for 5 or 10 base plates. However, premiums would apply to smaller orders. Many grades can be supplied.

Many of the firms also fabricate. We can provide data on what standard sizes of plate are being specified government projects.

Sample firms that stock thickness plate/or are able to supply or produce it:

Accro-Met NC
Andrea Montano
800-543-4755
Can supply in 6-150 mm.

Excel Bridge Mfg. CA
Craig Vasquez
562-944-0701
Can obtain steel plate and fabricate products in any metric dimension.

Leeco Steel Products IL
Mark Dickman
800-621-4366
Stocks some A572M metric plate. Can supply size/thickness in A572M or other grades.

Metalmart CA
Jed
800-888-7766
Has supplied metric plate. Stocks some, can supply many other thickness.

United States Steel can provide a chart showing their standard metric plate thicknesses (6-160 mm). They indicate their mill prices are generally the same as their prices for equivalent English sizes.

1.22 Structural Bolts

Many firms can produce A325M/M164M, and A490M/M253M bolts. Some can make ASTM A394M, galvanized metric transmission tower bolts.

Metric bolts may now be utilized on all projects.

Some firms indicated they could supply metric bolts at small quantities, but premiums primarily related to set up costs, would be associated.

Atwood Industries OH
James Mraz
800-362-2059
Can supply A325M and A490M, as well as other metric bolts.

Bennett Bolt Works NY
Ron Merrill NY, 315-689-3981
Vince Ruggerio OH, 216-979-9813

Detroit Heading MI
Roger Palmer, Kevin Stanisz
313-925-8138
Can also make A394M.

Haydon Bolts PA
Richard Guisti
215-537-8700

Holo-Chrome CT
Skip Gallo

Huck Int'l TX
Larry Chipman, Chuck Schultz
800-388-4825
Makes A325M and A490M product.

Kenneth Lilly Fasteners DE
Gary Lilly, Roland Sharp
800-433-1818
Can supply A325M and A490M

Lake Erie Screw OH
Steve Vass
216-521-1800

Metric and Multistandard Components NY
Craig Worster
800-431-2792
Can supply A325M and A490M bolts. Also supplies other metric bolts.

Mid-West Fabricating OH
Vaughn Doss
614-969-4411

National Bolt NY
M.D. Strauss
800-992-6587
Minimum order is 500 bolts.

Nucor Fastener Div IN
Jim Witucky
800-955-6826
Minimum order is one keg per size.

Ohio Rod Products IN
Jay Whitehead

812-689-6565

AI Nut & Bolt CA
Luke Sullivan
800-423-4287
Is able to make metric bolts.

United Steel and Fasteners IL
Perri Guerino, Bob Fiorio
630-250-0900
No minimum quantity. Premium on smaller orders.

Wayne Bolt MI
Joe or Mike Wojcik
800-521-2207
No minimum quantity.

1.23 Tools

Metric tape measures are available.

Some construction firms are using metric only tapes.

Federal agencies can buy 10 ft./3.3m tape measures on GSA schedule.
Product #5210-00-4988, under $5.

Lufkin Tools NC
919-362-7511
Makes metric tape measures.

Stanley Tools FL
312-286-7330
Makes metric measures
32-156 (5 m) 32-158 (5m/16')
33-443 (10 m) 33-428 (7.5m/25')
Carl Lickwar, Alan G. Martin 203-225-5111

Metric framing squares have also been ordered from Stanley by the US Public Health Service.

Stanley Hand Tools CT
800-262-2161

US Tape VA W. S. Spotwood 703-256-1500 makes metric tape measures, steel tapes, and derrick tapes.

Scales. Metric scales are available:

Staedtler-Mars Model 987-18-1
Alvin Model 117 PM Charvoz Model 30-1261

Contact your local graphic arts supply store to order.

1.24 Windows

Alenco Commercial Group TX
Ed Lund
409-823-6557

Andersen Windows Commercial Group MN
Craig Johnson
612-439-5150

Modu-Line Windows WI
Mike Capo
715-842-9110

Marvin Windows MN
John Schrack
800-821-8390 218-386-1430

Pella Windows IA
Cheryl Waits
515-628-1000
Can make any metric size.

PART 2 PRODUCTS

Not used.

PART 3 EXECUTION

Not used.

-- End of Section --

SECTION 01090

SOURCES FOR REFERENCE PUBLICATIONS

PART 1 GENERAL

1.1 REFERENCES

Various publications are referenced in other sections of the specifications to establish requirements for the work. These references are identified in each section by document number, date and title. The document number used in the citation is the number assigned by the sponsoring organization, i.e. ASHRAE 15 (1994) Safety Code for Mechanical Refrigeration. However, when the sponsoring organization has not assigned a number to a document, an identifying number has been assigned for convenience, i.e. ASHRAE's unnumbered 1993 edition of their Handbook, Fundamentals is identified as ASHRAE-03 (1993) Handbook, Fundamentals I-P Edition. The sponsoring organization number (ASHRAE 15) can be distinguished from an assigned identifying number (ASHRAE-03) by the lack of a dash mark (-) in the sponsoring organization assigned number.

1.2 ORDERING INFORMATION

The addresses of the organizations whose publications are referenced in other sections of these specifications are listed below, and if the source of the publications is different from the address of the sponsoring organization, that information is also provided. Documents listed in the specifications with numbers which were not assigned by the sponsoring organization should be ordered from the source by title rather than by number.

ACI INTERNATIONAL (ACI)

P.O. Box 9094
Farmington Hills, MI 48333-9094
Ph: 248-848-3800
Fax: 248-848-3801
Internet: http://www.aci-int.org

AGRICULTURAL MARKETING SERVICE (AMS)

Seed Regulatory and Testing Branch
USDA, AMS, LS Div.
Room 209, Bldg. 306, BARC-East
Beltsville, MD 20705-2325
Ph: 301-504-9430
Fax: 301-504-5454 Internet: http://www.ams.usda.gov/lsg/ls-sd.htm
e-mail: james_p_triplitt@usda.gov

AIR CONDITIONING AND REFRIGERATION INSTITUTE (ARI)

4301 North Fairfax Dr., Suite 425
ATTN: Pubs Dept.
Arlington, VA 22203

Ph: 703-524-8800
Fax: 703-528-3816
E-mail: ari@dgsys.com
Internet: www.ari.org

AIR MOVEMENT AND CONTROL ASSOCIATION (AMCA)

30 W. University Dr.
Arlington Heights, IL 60004-1893
Ph: 708-394-0404
Fax: 708-253-0088

ALUMINUM ASSOCIATION (AA)

Pubs Department
P.O. Box 753
Waldorf, MD 20601
Ph: 301-645-0756
Fax: 301-843-0159

AMERICAN ARCHITECTURAL MANUFACTURERS ASSOCIATION (AAMA)

1827 Walden Ofc. Sq.
Suite 104
Schaumburg, IL 60173-4268
Ph: 847-303-5664
Fax: 847-303-5774
Internet: www.aamanet.org

AMERICAN ASSOCIATION OF STATE HIGHWAY AND TRANSPORTATION OFFICIALS (AASHTO)

444 N. Capital St., NW, Suite 249
Washington, DC 20001
Ph: 800-231-3475
Fax: 800-525-5562
Internet: www.aashto.org

AMERICAN BEARING MANUFACTURERS ASSOCIATION (ABEMA)

1200 19th Street, NW, Suite 300
Washington, DC 20036-4303
Ph: 202-429-5155
Fax: 202-223-4579

AMERICAN CONFERENCE OF GOVERNMENTAL INDUSTRIAL HYGIENISTS (ACGIH)

1330 Kemper Meadow Dr.

Cincinnati, OH 45240
Ph: 513-742-2020
Fax: 513-742-3355

AMERICAN GAS ASSOCIATION (AGA)

Order from: AGA Distribution Center
1515 Wilson Blvd.
P.O. Box 79230
Baltimore, MD 21279-0230
Ph: 301-617-7819
Fax: 301-206-9789

AMERICAN HARDBOARD ASSOCIATION (AHA)

1210 W. Northwest Highway
Palatine, IL 60067
Ph: 708-934-8800
Fax: 708-934-8803

AMERICAN INSTITUTE OF STEEL CONSTRUCTION (AISC)

One East Wacker Dr., Suite 3100
Chicago, IL 60601-2001
Ph: 312-670-2400
Publications: 800-644-2400
Fax: 312-670-2400
Internet: http://www.aiscweb.com

AMERICAN INSTITUTE OF TIMBER CONSTRUCTION (AITC)

7012 So. Revere Parkway, Suite 140
Englewood, CO 80112
Ph: 303-792-9559
Fax: 303-792-0669

AMERICAN IRON AND STEEL INSTITUTE (AISI)

ATTN: Publication Orders
P.O. Box 4321
Chestertown, MD 21690
Ph: 800-277-3850
Fax: 410-810-0910

AMERICAN NATIONAL STANDARDS INSTITUTE (ANSI)

11 West 42nd St
New York, NY 10036
Ph: 212-642-4900
Fax: 212-398-0023
Internet: www.ansi.org/

AMERICAN PETROLEUM INSTITUTE (API)

1220 L St., NW
Washington, DC 20005
Ph: 202-682-8375
Fax: 202-962-4776
Internet: http://www.api.org

AMERICAN SOCIETY FOR TESTING AND MATERIALS (ASTM)

100 Barr Harbor Drive
West Conshohocken, PA 19428-2959
Ph: 610-832-9500
Fax: 610-832-9555

AMERICAN SOCIETY OF CIVIL ENGINEERS (ASCE)

1801 Alexander Bell Drive
Reston, VA 20190-4400
Ph: 800-548-2723
Fax: 703-295-6333
Internet: www.pubs.asce.org
e-mail: marketing@asce.org

AMERICAN SOCIETY OF HEATING, REFRIGERATING AND AIR-CONDITIONING ENGINEERS (ASHRAE)

1791 Tullie Cir., NE
Atlanta, GA 30329-2305
Ph: 800-527-4723 or 404-636-8400
Fax: 404-321-5478
Internet: http://www.ashrae.org

AMERICAN SOCIETY OF MECHANICAL ENGINEERS (ASME)

22 Law Dr., Box 2300
Fairfield, NJ 07007-2900
Ph: 800-843-2763
Fax: 201-882-1717
Internet: www.asme.org

AMERICAN SOCIETY OF SANITARY ENGINEERING (ASSE)

P.O. Box 40362
Bay Village, OH 44140
Ph: 216-835-3040
Fax: 216-835-3488
E-mail: asse@ix.netcom.com

AMERICAN WATER WORKS ASSOCIATION(AWWA)

6666 West Quincy
Denver, CO 80235
Ph: 800-926-7337
Fax: 303-795-1989
Internet: www.awwa.org

AMERICAN WELDING SOCIETY (AWS)

550 N.W. LeJeune Road
Miami, FL 33126
Ph: 305-443-9353
Fax: 305-443-7559

AMERICAN WOOD-PRESERVERS' ASSOCIATION (AWPA)

3246 Fall Creek Highway, Suite 1900
Grandbury, TX 76049-7979
Ph: 817-326-6300
Fax: 817-326-6306

APA - THE ENGINEERED WOOD ASSOCIATION (APA)

P.O. Box 11700
Tacoma, WA 98411-0700
Ph: 253-565-6600
Fax: 253-563-7265
Internet: www.apawood.org

Note: Prices are available only by calling APA

ASBESTOS CEMENT PIPE PRODUCERS ASSOCIATION (ACPPA)

1745 Jefferson Davis Highway, Suite 406
Arlington, VA 22202
Ph: 703-412-1153
Fax: 703-412-1152

ASSOCIATED AIR BALANCE COUNCIL (AABC)

1518 K St., NW, Suite 503
Washington, DC 20005
Ph: 202-737-0202
Fax: 202-638-4833

ASSOCIATION OF EDISON ILLUMINATING COMPANIES (AEIC)

600 No. 18th St.

P.O. Box 2641
Birmingham, AL 35291-0992
Ph: 205-257-2530
Fax: 205-257-2540
Internet: http://www.aeic.org/index.htm
E-Mail: veazey-white@apc.com

BUILDERS HARDWARE MANUFACTURERS ASSOCIATION (BHMA)

355 Lexington Ave. New York, NY 10017-6603
Ph: 212-661-4261
Fax: 212-370-9047
Internet: www.buildershardware.com

CALIFORNIA REDWOOD ASSOCIATION (CRA)

405 Enfrente Ave., Suite 200
Novato, CA 94949
Ph: 415-382-0662
Fax: 415-382-8531

CAST IRON SOIL PIPE INSTITUTE (CISPI)

5959 Shallowford Rd., Suite 419
Chattanooga, TN 37421
Ph: 423-892-0137
Fax: 423-892-0817

CODE OF FEDERAL REGULATIONS (CFR)

Order from:
Government Printing Office
Washington, DC 20402
Ph: 202-512-1800
Fax: 202-275-7703
Internet: http://www.pls.com:8001/his/cfr.html

COMMERCIAL ITEM DESCRIPTIONS (CID)

Order from:
General Services Administration
Federal Supply Service Bureau
470 E L'Enfant Plaza, S.W.
Washington, DC 20407

Ph: 202-619-8925
Internet: http://pub.fss.gsa.gov/h1-pub.html

CONCRETE REINFORCING STEEL INSTITUTE (CRSI)

933 No. Plum Grove Rd.
Schaumburg, IL 60173-4758
Ph: 847-517-1200
Fax: 847-517-1206
Internet: http://www.crsi.org

COPPER DEVELOPMENT ASSOCIATION (CDA)

260 Madison Ave.
New York, NY 10016
Ph: 212-251-7200
Fax: 212-251-7234
E-mail: http://www.copper.org

CORPS OF ENGINEERS (COE)

Order from:
U.S. Army Engineer Waterways Experiment Station
ATTN: Technical Report Distribution Section, Services Branch, TIC
3909 Halls Ferry Rd.
Vicksburg, MS 39180-6199
Ph: 601-634-2571
Fax: 601-634-2506

COUNCIL OF AMERICAN BUILDING OFFICIALS (CABO)

5203 Leesburg Pike, Suite 708
Falls Church, VA 22041
Ph: 703-931-4533
Fax: 703-379-1546

DEPARTMENT OF COMMERCE (DOC)

Order From:
National Technical Information Service
5285 Port Royal Road
Springfield, VA 22161
Ph: 703-487-4600
Fax: 703-321-8547
Internet: http://www.ntis.gov

DUCTILE IRON PIPE RESEARCH ASSOCIATION (DIPRA)

245 Riverchase Parkway East, Suite 0
Birmingham, AL 35244-1856
Ph: 205-988-9870
Fax: 205-988-9822
Internet: www.diprn.org

ELECTRONIC INDUSTRIES ASSOCIATION (EIA)

2500 Wilson Blvd.
Arlington, VA 22201-3834
Ph: 703-907-7500
Fax: 703-907-7501
Internet: www.eia.org
Order From:
Global Engineering Documents
15 Inverness Lane East
Englewood, CO 80112
Ph: 800-854-7179
Fax: 303-397-2740
Internet: http://global.ihs.com

ENGINEERING MANUALS (EM)

USACE Publications Depot
Attn: CEIM-SP-D
2803 52nd Avenue
Hyattsville, MD 20781-1102
Ph: 301-394-0081

ENVIRONMENTAL PROTECTION AGENCY (EPA)

Public Information Center
401 M St., SW
Washington, DC 20460
Ph: 800-490-9198
FAX: 202-260-6257
Internet: http://www.epa.gov NOTE: Some documents are available only from National Technical Information Services (NTIS)
5285 Port Royal Rd.
Springfield, VA 22161
Ph: 800-553-6847
Fax: 703-321-8547
Internet: http://www.fedworld.gov/ntis/ntishome.html

FACTORY MUTUAL ENGINEERING AND RESEARCH (FM)

1151 Boston-Providence Turnpike
P.O. Box 9102
Norwood, MA 02062-9102

Ph: 617-255-4681
Fax: 617-255-4359
Internet: http://www.factorymutual.com

FEDERAL SPECIFICATIONS (FS)

Order from:
General Services Administration
Federal Supply Service Bureau
470 L'Enfant Plaza, S.W.
Washington, DC 20407
Ph: 202-619-8925
Fax: 202-619-8978
Internet: http://pub.fss.gsa.gov/h1-pub.html

GLASS ASSOCIATION OF NORTH AMERICA (GANA)

3310 S.W. Harrison St.
Topeka, KS 66611-2279
Ph: 913-266-7013
Fax: 913-266-0272
Internet:www.cssinfo.com/info/gana.html

GYPSUM ASSOCIATION (GA)

810 First St. NE, Suite 510
Washington, DC 20002
Ph: 202-289-5440
Fax: 202-289-3707

ILLUMINATING ENGINEERING SOCIETY OF NORTH AMERICA (IESNA)

120 Wall St., 17 Floor
New York, NY 10005-4001
Ph: 212-248-5000
Fax: 212-248-5017
Internet: www.iesna.org

INSECT SCREENING WEAVERS ASSOCIATION (ISWA)

P.O. Box 1018

Ossining, NY 10562
Ph: 914-962-9052
Fax: 914-923-3031

INSTITUTE OF ELECTRICAL AND ELECTRONICS ENGINEERS (IEEE)

445 Hoes Ln, P. O. Box 1331
Piscataway, NJ 08855-1331
Ph: 732-981-0060
Fax: 732-981-9667
Internet: http//stdsbbs.ieee.org
E-mail: customer.service@ieee.org
Note: Documents may also be ordered from:
Global Engineering Documents
15 Inverness Way East
Englewood, CO 80112
Ph: 800-854-7179
Fax:303-397-2740
Internet: global.ihs.com

INSULATED CABLE ENGINEERS ASSOCIATION (ICEA)

P.O. Box 440
South Yarmouth, MA 02664
Ph: 508-394-4424
Fax: 508-394-1194
E-mail: www.electricnet.com/orgs/insucbl.htm

INTERNATIONAL APPROVAL SERVICES (IAS)

8501 East Pleasant Valley Rd.
Cleveland, OH 44131
Ph: 216-524-4990
Fax: 216-642-3463
Internet: www.iasapprovals.org

INTERNATIONAL CONFERENCE OF BUILDING OFFICIALS (ICBO)

5360 Workman Mill Rd.
Whittier, CA 90601-2298
Ph: 310-699-0541
Fax: 310-692-3853

KITCHEN CABINET MANUFACTURERS ASSOCIATION (KCMA)

1899 Preston White Dr.
Reston, VA 20191-5435
Ph: 703-264-1690
Fax: 703-620-6530
Internet: www.kcma.org

MANUFACTURERS STANDARDIZATION SOCIETY OF THE VALVE AND FITTINGS INDUSTRY (MSS)

127 Park St., NE
Vienna, VA 22180-4602
Ph: 703-281-6613
Fax: 703-281-6671
Internet: //cssinfo.com/info/mss/html

MARBLE INSTITUTE OF AMERICA (MIA)

33505 State St.
Farmington, MI 48335
Ph: 810-476-5558
Fax: 810-476-1630

MATERIAL HANDLING INDUSTRY (MHI)

8720 Red Oak Blvd., Suite 201
Charlotte, NC 28217-3992
Ph: 800-345-1815
704-522-9644
Fax: 704-522-7826

METAL BUILDING MANUFACTURERS ASSOCIATION (MBMA)

1300 Sumner Ave.
Cleveland, OH 44115-2851
Ph: 216-241-7333
Fax: 216-241-0105

MIDWEST INSULATION CONTRACTORS ASSOCIATION (MICA)

2017 So. 139th Cir.
Omaha, NE 68144
Ph: 402-342-3463
Fax: 402-330-9702

MILITARY STANDARDS (MIL-STD)

Order from:

Standardization Documents Order Desk
Building 4, Section D
700 Robbins Ave.
Philadelphia, PA 19111-5094
Ph: 215-697-2179
Fax: 215-697-2978
Internet: www.dodssp.daps.mil

NACE INTERNATIONAL (NACE)

P.O. Box 218340
Houston, TX 77218-8340
Ph: 221-228-6200
Fax: 281-228-6369
Internet: www.nace.org

NATIONAL ASSOCIATION OF PLUMBING-HEATING-COOLING CONTRACTORS (NAPHCC)

180 S. Washington Street
P.O. Box 6808
Falls Church, VA 22046
Ph: 800-533-7694
Fax: 703-237-7442

NATIONAL ELECTRICAL MANUFACTURERS ASSOCIATION (NEMA)

1300 N. 17th St., Suite 1847
Rosslyn, VA 22209
Ph: 703-841-3200
Fax: 202-457-8473
Internet: http//www.nema.org/
Order from:
Global Engineering Documents
15 Inverness Way East
Englewood, CO 80112-5776
Ph: 800-264-3974
Fax: 303-397-7935
Internet: http://global.ihs.com

NATIONAL ENVIRONMENTAL BALANCING BUREAU (NEBB)

8575 Grovemont Circle
Gaithersburg, MD 20877-4121
Ph: 301-977-3698
Fax: 301-977-9589

NATIONAL FIRE PROTECTION ASSOCIATION (NFPA)

One Batterymarch Park P.O. Box 9101
Quincy, MA 02269-9101
Ph: 800-344-3555
Fax: 800-593-6372
Internet: http://www.nfpa.org
NOTE: The complete set of 1997 NFPA National Fire Codes (13 Vol.) is available for $835.00.

NATIONAL HARDWOOD LUMBER ASSOCIATION (NHLA)

P.O. Box 34518
Memphis, TN 38184-0518
Ph: 901-377-1818
Fax: 901-382-6419
e-mail: nhla@natlhardwood.org

NATIONAL INSTITUTE FOR CERTIFICATION IN ENGINEERING TECHNOLOGIES (NICET)

1420 King Street
Alexandria, VA 22314-2794
Ph: 888-476-4238
Internet: www.nicet.org

NATIONAL INSTITUTE OF STANDARDS AND TECHNOLOGY (NIST)

Department of Commerce
Gaithersburg, MD 20899-0001
Ph: 301-975-4025
Fax: 301-926-1630
Order From:
Superintendent of Documents
U.S. Government Printing Office (GPO)
Washington, DC 20402
Ph: 202-512-1800
Fax: 202-512-2250
or
National Technical Information Services (NTIS)
5285 Port Royal Rd.
Springfield, VA 22161
Ph: 800-553-6847
Fax: 703-321-8547
Internet: http://ww.gov/ntis.gov

NATIONAL READY-MIXED CONCRETE ASSOCIATION (NRMCA)

900 Spring St.
Silver Spring, MD 20910
Ph: 301-587-1400
Fax: 301-585-4219

NORTHEASTERN LUMBER MANUFACTURERS ASSOCIATION (NELMA)

P.O. Box 87A
Cumberland Center, ME 04021
Ph: 207-829-6901
Fax: 207-829-4293

NSF INTERNATIONAL (NSF)

ATTN: Publications
P.O. Box 130140
Ann Arbor, MI 48113-0140
Ph: 313-913-5744
Fax: 313-769-0109
Internet: www.nsf.org

PLASTIC PIPE AND FITTINGS ASSOCIATION (PPFA)

800 Roosevelt Rd., Bldg C, Suite 20
Glen Ellyn, IL 60137
Ph: 630-858-6540
Fax: 630-790-3095

PLUMBING AND DRAINAGE INSTITUTE (PDI)

45 Bristol Dr., Suite 101.
South Easton, MA 02375
Ph: 508-230-3516
Fax: 508-230-3529
E-Mail: pdhw@tiac.net

SCREEN MANUFACTURERS ASSOCIATION (SMA)

2850 South Ocean Boulevard, Suite 114
Palm Beach, FL 33480-5535
Ph: 561-533-0991
Fax: 561-533-7466
e-mail: fscottfitzgerald@compuserve.com

SHEET METAL & AIR CONDITIONING CONTRACTORS' NATIONAL ASSOCIATION (SMACNA)

P.O. Box 221230
Chantilly, VA 20153-1230
Ph: 703-803-2980
Fax: 703-803-3732
Internet: http://www.smacna.org

SOCIETY OF AUTOMOTIVE ENGINEERS (SAE)

400 Commonwealth Dr.
Warrendale, PA 15096-0001
Ph: 412-776-4970
Fax: 412-776-0790
Internet: http://www.sae.org
e-mail: publications @sae.org

SOUTHERN CYPRESS MANUFACTURERS ASSOCIATION (SCMA)

400 Penn Center Boulevard, Suite 530
Pittsburgh, PA 15235
Ph: 412-829-0770
Fax: 412-829-0844

SOUTHERN PINE INSPECTION BUREAU (SPIB)

4709 Scenic Highway
Pensacola, FL 32504-9094
Ph: 850-434-2611
Fax: 850-433-5594
e-mail: spib@spib.org

STEEL DECK INSTITUTE (SDI)

P.O. Box 25
Fox River Grove, IL 60021
Ph: 847-462-1930
Fax: 847-462-1940
Internet: http://www.sdi.org
e-mail: janet@sdi.org

STEEL DOOR INSTITUTE (SDOI)

30200 Detroit Rd.
Cleveland, OH 44145-1967
Ph: 216-899-0010
Fax: 216-892-1404

STEEL JOIST INSTITUTE (SJI)

3127 Tenth Ave., North Ext.
Myrtle Beach, SC 29577-6760
Ph: 803-626-1995
Fax: 803-626-5565

TILE COUNCIL OF AMERICA (TCA)

P.O. Box 1787
Clemson, SC 29633-1787
Ph: 864-646-8453
FAX: 864-646-2821

UNDERWRITERS LABORATORIES (UL)

333 Pfingsten Rd.
Northbrook, IL 60062-2096
Ph: 800-704-4050
Fax: 847-509-6249
Internet: http://www.ul.com/
Order from:
Global Engineering Documents
15 Inverness Way East
Englewood, CO 80112-5776
Ph: 800-569-7128
Fax: 303-397-7945
Internet: http://global.ihs.com
E-mail: global@ihs.com

UNI-BELL PVC PIPE ASSOCIATION (UBPPA)

2655 Villa Creek Dr., Suite 155
Dallas, TX 75234
Ph: 214-243-3902
Fax: 214-243-3907

WEST COAST LUMBER INSPECTION BUREAU (WCLIB)

P.O. Box 23145
Portland, OR 97281
Ph: 503-639-0651
Fax: 503-684-8928

WESTERN WOOD PRODUCTS ASSOCIATION (WWPA)

Yeon Bldg.

522 SW 5th Ave.
Portland, OR 97204-2122
Ph: 503-224-3930
Fax: 503-224-3934

-- End of Section --

SECTION 01200

CONTRACTOR WARRANTY MANAGEMENT

PART 1 GENERAL

1.1 REFERENCES

a. Clause "Warranty of Construction", (FAR 52.246-0021)

b. Clause "Inspection of Construction" (FAR 52.246-12)

c. Special Requirement paragraph entitled "Record Drawings"

d. Specification Section entitled "Contractor Quality Control"

1.2 SUBMITTALS

Government approval is required for submittals with a "GA" designation; submittals having an "FIO" designation are for information only. The following shall be submitted in accordance with Section 01330 SUBMITTAL PROCEDURES:

SD-08 Statements

Warranty Plan; FIO

1.3 GENERAL

In order to insure that the Government systematically receives all warranties of construction, equipment and systems to which it is entitled, the contractor shall execute all actions as required by above references and as contained herein.

1.4 POST-COMPLETION INSPECTIONS

For purposes of management of construction warranties, the Government conducts four and nine month warranty inspections with using agencies. The Contractor is encouraged to attend these inspections in order to better manage any warranty items for which it may be responsible.

1.5 TAGGING OF EXTENDED WARRANTY ITEMS

The Contractor shall install tags to identify items protected by extended warranty, i.e. longer than the one year general warranty of construction.

The tags shall be minimum 3 inches by 5 inches in size, machine-printed in minimum 14-point type, and shall be weatherproof. Tags shall be attached to equipment if accessible or to accessible control panel, etc. As a minimum, tags shall indicate the following information:

"Extended Warranty Item:"
Name of Item
Name of System with which associated, number designation within system,

or other identifier
Model Number
Serial Number
Start and end Dates of Warranty
Contract number
Contract Name
Contractor Name
Point of Contact name, organization and telephone number.

1.6 POSTING OF INSTRUCTIONS

In addition to any posting of operating procedures as may be required elsewhere in this contract, any equipment or system for which proper operation or maintenance is critical in order to preserve warranties, prevent damage, or for reasons of safety shall have proper operating procedures posted near the equipment or near the operating point. Instructions shall be protected by 1/16 inch thick plastic sheet. As a minimum such equipment or system shall include:

Electrical Substations
Transformers
Electrical Generators
Major HVAC System components including chillers, air-handlers, fans, etc.
HVAC Control Panel
Boilers
Air Compressors

1.7 WARRANTY MEETING

At least 14 days prior to the 80% completion point of this contract (or deliverable phase thereof), the contractor will notify the Government representative for the purpose of scheduling a meeting to clarify understandings of responsibilities with respect to warranties to which the Government is entitled. The Government and contractor shall attend the warranty meeting, as well as any subcontractors, or suppliers involved in the warranty process. The Warranty Plan (below) shall have already been submitted and approved by the Government before the warranty meeting can take place, and shall be the basis of the meeting's agenda.

1.8 WARRANTY PLAN

At least 30 days before the planned warranty meeting, the contractor shall submit a warranty plan for Government approval per section "Submittals". The Warranty Plan shall include all required actions and documents to assure that the Government receives all warranties to which it is entitled. The plan shall be in narrative form and contain sufficient detail to render it suitable for use by future maintenance and repair personnel, whether tradesmen, or of engineering background, not necessarily familiar with this contract. The tern "status" as indicated below shall include due date and whether item has been submitted or was accomplished. As a minimum the plan shall indicate:

a. Roles and responsibilities of all personnel associated with the warranty process, including points of contact and telephone numbers within the organizations of the contractor's, subcontractors or suppliers involved.

b. Listing and status of O&M manuals and As-built drawings, and

expected delivery dates.

c. Listing and status of all training to be provided to Government personnel, whether specified by contract or required by manufacturers.

d. Listing and status of delivery of all Certificates of Warranty for extended warranty items, to include roofs, HVAC balancing, pumps, motors, transformers, and for all commissioned systems such as fire protection and alarm systems, sprinkler systems, lightning protection systems, etc.

e. A list for each warranted equipment, item, feature of construction or system indicating:

Name of item
Model and serial numbers.
Location where installed
Names of manufacturers or, suppliers and phone numbers.
Names addresses and telephone numbers of sources of spare parts
Warranties and terms of warranty. This shall include one-year overall warranty of construction as required by ref. 1.a. Clearly indicate which items have extended warranties.
Cross-reference to warranty certificates as applicable
Starting point and duration of warranty period.
Summary of maintenance procedures required to continue the warranty in force.
Cross-reference to specific pertinent Operation and Maintenance manuals

Organization, names and phone numbers of persons to call for warranty service
Typical response time and repair time expected for various warranted equipment

f. The contractor's plans for attendance at the Four and Nine month post-construction warranty inspections conducted by the Government.

g. Procedure and status of tagging of all equipment covered by extended warranties.

h. Copies of instructions to be posted near selected pieces of equipment where operation is critical for warranty and/or safety reasons

PART 2 PRODUCTS

Not used.

PART 3 EXECUTION

Not used.

-- End of Section --

SECTION 01330

SUBMITTAL PROCEDURES

PART 1 GENERAL

1.1 SUBMITTAL IDENTIFICATION

Submittals required are identified by SD numbers as follows:

SD-01 Data

SD-04 Drawings

SD-06 Instructions

SD-07 Schedules

SD-08 Statements

SD-09 Reports

SD-13 Certificates

SD-14 Samples

SD-18 Records

SD-19 Operation and Maintenance Manuals

1.2 SUBMITTAL CLASSIFICATION

Submittals are classified as follows:

1.2.1 Government Approved

Governmental approval is required for extensions of design, critical materials, deviations, equipment whose compatibility with the entire system must be checked, and other items as designated by the Contracting Officer. Within the terms of the Contract Clause entitled "Specifications and Drawings for Construction," they are considered to be "shop drawings."

1.2.2 Information Only

All submittals not requiring Government approval will be for information only. They are not considered to be "shop drawings" within the terms of the Contract Clause referred to above.

1.3 APPROVED SUBMITTALS

The Contracting Officer's approval of submittals shall not be construed as a complete check, but will indicate only that the general method of construction, materials, detailing and other information are satisfactory. Approval will not relieve the Contractor of the responsibility for any error which may exist, as the Contractor under the CQC requirements of this contract is responsible for dimensions, the design of adequate connections

and details, and the satisfactory construction of all work. After submittals have been approved by the Contracting Officer, no resubmittal for the purpose of substituting materials or equipment will be considered unless accompanied by an explanation of why a substitution is necessary.

1.4 DISAPPROVED SUBMITTALS

The Contractor shall make all corrections required by the Contracting Officer and promptly furnish a corrected submittal in the form and number of copies specified for the initial submittal. If the Contractor considers any correction indicated on the submittals to constitute a change to the contract, a notice in accordance with the Contract Clause "Changes" shall be given promptly to the Contracting Officer.

1.5 WITHHOLDING OF PAYMENT

Payment for materials incorporated in the work will not be made if required approvals have not been obtained.

PART 2 PRODUCTS (Not Applicable)

PART 3 EXECUTION

3.1 GENERAL

The Contractor shall make submittals as required by the specifications. The Contracting Officer may request submittals in addition to those specified when deemed necessary to adequately describe the work covered in the respective sections. Units of weights and measures used on all submittals shall be the same as those used in the contract drawings. Each submittal shall be complete and in sufficient detail to allow ready determination of compliance with contract requirements. Prior to submittal, all items shall be checked and approved by the Contractor's Quality Control (CQC) representative and each item shall be stamped, signed, and dated by the CQC representative indicating action taken. Proposed deviations from the contract requirements shall be clearly identified. Submittals shall include items such as: Contractor's, manufacturer's, or fabricator's drawings; descriptive literature including (but not limited to) catalog cuts, diagrams, operating charts or curves; test reports; test cylinders; samples; O&M manuals (including parts list); certifications; warranties; and other such required submittals. Submittals requiring Government approval shall be scheduled and made prior to the acquisition of the material or equipment covered thereby. Samples remaining upon completion of the work shall be picked up and disposed of in accordance with manufacturer's Material Safety Data Sheets (MSDS) and in compliance with existing laws and regulations.

3.2 SUBMITTAL REGISTER (ENG FORM 4288)

At the end of this section is one set of ENG Form 4288 listing items of equipment and materials for which submittals are required by the specifications; this list may not be all inclusive and additional submittals may be required. The Contractor will also be given the submittal register as a diskette containing the computerized ENG Form 4288 and instructions on the use of the diskette. Columns "d" through "r" have been completed by the Government; the Contractor shall complete columns "a" and "s" through "u" and submit the forms (hard copy plus associated electronic file) to the Contracting Officer for approval within 7 calendar days after Notice to Proceed. The Contractor shall keep this diskette

up-to-date and shall submit it to the Government together with the monthly payment request. The approved submittal register will become the scheduling document and will be used to control submittals throughout the life of the contract. The submittal register and the progress schedules shall be coordinated.

3.3 SCHEDULING

Submittals covering component items forming a system or items that are interrelated shall be scheduled to be coordinated and submitted concurrently. Certifications to be submitted with the pertinent drawings shall be so scheduled. Adequate time (a minimum of 14 calendar days exclusive of mailing time) shall be allowed and shown on the register for review and approval. No delay damages or time extensions will be allowed for time lost in late submittals.

3.4 TRANSMITTAL FORM (ENG FORM 4025)

The sample transmittal form (ENG Form 4025) attached to this section shall be used for submitting both Government approved and information only submittals in accordance with the instructions on the reverse side of the form. These forms will be furnished to the Contractor. This form shall be properly completed by filling out all the heading blank spaces and identifying each item submitted. Special care shall be exercised to ensure proper listing of the specification paragraph and/or sheet number of the contract drawings pertinent to the data submitted for each item.

3.5 SUBMITTAL PROCEDURE

Submittals shall be made as follows:

3.5.1 Procedures

At the Quality Control Coordination meeting, or preconstruction conference, the Contractor shall ascertain the name and address of each individual, agency, or firm who is designated to normally receive items for approval, for information or samples. The Contractor shall complete ENG Form 4025, entering each item requiring a separate approval action as a separate item on the form, for each transmittal. A transmittal may consist of one or more 4025 sheets. The transmittal, consisting of ENG Form 4025 plus all applicable submittals, is then sent to the appropriate individual. On critical items the contractor is encouraged to confirm receipt via telephone. The Contractor shall submit seven copies of submittals for approval and three for items of information.

3.5.2 Deviations

For submittals which include proposed deviations requested by the Contractor, the column "variation" of ENG Form 4025 shall be checked. The Contractor shall set forth in writing the reason for any deviations and annotate such deviations on the submittal. The Government reserves the right to rescind inadvertent approval of submittals containing unnoted deviations.

3.6 CONTROL OF SUBMITTALS

The Contractor shall carefully control his procurement operations to ensure that each individual submittal is made on or before the Contractor scheduled submittal date shown on the approved "Submittal Register."

3.7 GOVERNMENT APPROVED SUBMITTALS

Upon completion of review of submittals requiring Government approval, the submittals will be identified as having received approval by being so stamped and dated. 3 copies of the submittal will be retained by the Contracting Officer and 3 copies of the submittal will be returned to the Contractor.

3.8 INFORMATION ONLY SUBMITTALS

Normally submittals for information only will not be returned. Approval of the Contracting Officer is not required on information only submittals. The Government reserves the right to require the Contractor to resubmit any item found not to comply with the contract. This does not relieve the Contractor from the obligation to furnish material conforming to the plans and specifications; will not prevent the Contracting Officer from requiring removal and replacement of nonconforming material incorporated in the work; and does not relieve the Contractor of the requirement to furnish samples for testing by the Government laboratory or for check testing by the Government in those instances where the technical specifications so prescribe.

3.9 STAMPS

Stamps used by the Contractor on the submittal data to certify that the submittal meets contract requirements shall be similar to the following:

CONTRACTOR

(Firm Name)

_____ Approved

_____ Approved with corrections as noted on submittal data and/or attached sheets(s).

SIGNATURE: _____

TITLE: _____

DATE: _____

-- End of Section --

SECTION 01356

STORM WATER POLLUTION PREVENTION MEASURES

PART 1 GENERAL

1.1 REFERENCES

The publications listed below form a part of this specification to the extent referenced. The publications are referred to in the text by basic designation only.

AMERICAN SOCIETY FOR TESTING AND MATERIALS (ASTM)

ASTM D 3786	(1987) Hydraulic Bursting Strength of Knitted Goods and Nonwoven Fabrics - Diaphragm Bursting Strength Tester Method
ASTM D 4439	(1995) Standard Terminology for Geotextiles
ASTM D 4491	(1992) Water Permeability of Geotextiles by Permittivity
ASTM D 4533	(1991) Trapezoid Tearing Strength of Geotextiles
ASTM D 4632	(1991) Grab Breaking Load and Elongation of Geotextiles
ASTM D 4751	(1995) Determining Apparent Opening Size of a Geotextile
ASTM D 4873	(1995) Identification, Storage, and Handling of Geotextiles

1.2 GENERAL

The Contractor shall implement the storm water pollution prevention measures specified in this section in a manner which will meet the requirements of Section 01410 ENVIRONMENTAL PROTECTION, and the requirements of the National Pollution Discharge Elimination System (NPDES) permit attached to that Section.

1.3 SUBMITTALS

Government approval is required for all submittals with a "GA" designation; submittals having an "FIO" designation are for information only. The following shall be submitted in accordance with Section 01330 SUBMITTAL PROCEDURES:

SD-13 Certificates

Mill Certificate or Affidavit; FIO.

1.4 EROSION AND SEDIMENT CONTROLS

The controls and measures required by the Contractor are described below.

1.4.1 Stabilization Practices

The stabilization practices to be implemented shall include temporary seeding, mulching, sod stabilization, inlet protection, silt fences, straw bales, protection of trees, preservation of mature vegetation, etc. On his daily CQC Report, the Contractor shall record the dates when the major grading activities occur, (e.g., clearing and grubbing, excavation, embankment, and grading); when construction activities temporarily or permanently cease on a portion of the site; and when stabilization practices are initiated. Except as provided in paragraphs UNSUITABLE CONDITIONS and NO ACTIVITY FOR LESS THAN 21 DAYS, stabilization practices shall be initiated as soon as practicable, but no more than 14 days, in any portion of the site where construction activities have temporarily or permanently ceased.

1.4.1.1 Unsuitable Conditions

Where the initiation of stabilization measures by the fourteenth day after construction activity [temporarily or] permanently ceases is precluded by unsuitable conditions caused by the weather, stabilization practices shall be initiated as soon as practicable after conditions become suitable.

1.4.1.2 No Activity for Less Than 21 Days

Where construction activity will resume on a portion of the site within 21 days from when activities ceased (e.g., the total time period that construction activity is temporarily ceased is less than 21 days), then stabilization practices do not have to be initiated on that portion of the site by the fourteenth day after construction activity temporarily ceased.

1.4.2 Structural Practices

Structural practices shall be implemented to divert flows from exposed soils, temporarily store flows, or otherwise limit runoff and the discharge of pollutants from exposed areas of the site. Structural practices shall be implemented in a timely manner during the construction process to minimize erosion and sediment runoff. Structural practices shall include the following devices. Location and details of installation and construction are shown on the drawings.

1.4.2.1 Silt Fences

The Contractor shall provide silt fences as a temporary structural practice to minimize erosion and sediment runoff. Silt fences shall be properly installed to effectively retain sediment immediately after completing each phase of work where erosion would occur in the form of sheet and rill erosion (e.g. clearing and grubbing, excavation, embankment, and grading). Silt fences shall be installed in the locations indicated on the drawings. Final removal of silt fence barriers shall be upon approval by the Contracting Officer.

1.4.2.2 Straw Bales

The Contractor shall provide bales of straw as a temporary structural practice to minimize erosion and sediment runoff. Bales shall be properly placed to effectively retain sediment immediately after completing each phase of work (e.g., clearing and grubbing, excavation, embankment, and grading) in each independent runoff area (e.g., after clearing and grubbing

in an area between a ridge and drain, bales shall be placed as work progresses, bales shall be removed/replaced/relocated as needed for work to progress in the drainage area). Areas where straw bales are to be used are shown on the drawings. Final removal of straw bale barriers shall be upon approval by the Contracting Officer. Rows of bales of straw shall be provided as follows:

a. Along the downhill perimeter edge of all areas disturbed.

b. Along the top of the slope or top bank of drainage ditches, channels, swales, etc. that traverse disturbed areas.

c. Along the toe of all cut slopes and fill slopes of the construction areas.

d. Perpendicular to the flow in the bottom of existing drainage ditches, channels, swales, etc. that traverse disturbed areas or carry runoff from disturbed areas.

e. Perpendicular to the flow in the bottom of new drainage ditches, channels, and swales.

f. At the entrance to culverts that receive runoff from disturbed areas.

PART 2 PRODUCTS

2.1 COMPONENTS FOR SILT FENCES

2.1.1 Filter Fabric

The geotextile shall comply with the requirements of ASTM D 4439, and shall consist of polymeric filaments which are formed into a stable network such that filaments retain their relative positions. The filament shall consist of a long-chain synthetic polymer composed of at least 85 percent by weight of ester, propylene, or amide, and shall contain stabilizers and/or inhibitors added to the base plastic to make the filaments resistance to deterioration due to ultraviolet and heat exposure. Synthetic filter fabric shall contain ultraviolet ray inhibitors and stabilizers to provide a minimum of six months of expected usable construction life at a temperature range of -18 to 49 degrees C. The filter fabric shall meet the following requirements:

FILTER FABRIC FOR SILT SCREEN FENCE

PHYSICAL PROPERTY	TEST PROCEDURE	STRENGTH REQUIREMENT
Grab Tensile	ASTM D 4632	445 N min.
Elongation (%)		30 % max.
Trapezoid Tear	ASTM D 4533	245 N min.
Mullen Burst	ASTM D 3786	1200 N min.
Permittivity	ASTM D 4491	0.2 sec-1
AOS (U.S. Std Sieve)	ASTM D 4751	20-100

2.1.2 Silt Fence Stakes and Posts

The Contractor may use either wooden stakes or steel posts for fence construction. Wooden stakes utilized for silt fence construction, shall have a minimum cross section of 50 mm by 50 mm when oak is used and 100 mm by 100 mm when pine is used, and shall have a minimum length of 1.5 m. Steel posts (standard "U" or "T" section) utilized for silt fence construction, shall have a minimum mass of 1.98 kg per linear meter and a minimum length of 1.5 m.

2.1.3 Mill Certificate or Affidavit

A mill certificate or affidavit shall be provided attesting that the fabric and factory seams meet chemical, physical, and manufacturing requirements specified above. The mill certificate or affidavit shall specify the actual Minimum Average Roll Values and shall identify the fabric supplied by roll identification numbers. The Contractor shall submit a mill certificate or affidavit signed by a legally authorized official from the company manufacturing the filter fabric.

2.1.4 Identification Storage and Handling

Filter fabric shall be identified, stored and handled in accordance with ASTM D 4873.

2.2 COMPONENTS FOR STRAW BALES

The straw in the bales shall be stalks from oats, wheat, rye, barley, or rice, furnished in air dry condition. The bales shall have a standard cross section of 350 mm by 450 mm. All bales shall be either wire-bound or string-tied. The Contractor may use either wooden stakes or steel posts to secure the straw bales to the ground. Wooden stakes utilized for this purpose, shall have a minimum dimensions of 50 mm by 50 mm in cross section and shall have a minimum length of 1 m. Steel posts (standard "U" or "T" section) utilized for securing straw bales, shall have a minimum mass of 1.98 kg per linear meter and a minimum length of 1 m .

PART 3 EXECUTION

3.1 INSTALLATION OF SILT FENCES

Silt fences shall extend a minimum of 400 mm above the ground surface and shall not exceed 860 mm above the ground surface. Filter fabric shall be from in a continuous roll cut to the length of the barrier to avoid the use of joints. When joints are unavoidable, filter fabric shall be spliced together at a support post, with a minimum 150 mm overlap, and securely sealed. A trench shall be excavated approximately 100 mm wide and 100 mm deep on the upslope side of the location of the silt fence. The 100 mm by 100 mm trench shall be backfilled and the soil compacted over the filter fabric. Silt fences shall be removed upon approval by the Contracting Officer.

3.2 INSTALLATION OF STRAW BALES

Straw bales shall be placed in a single row, lengthwise on the contour, with ends of adjacent bales tightly abutting one another. Straw bales shall be installed so that bindings are oriented around the sides rather than along the tops and bottoms of the bales in order to prevent deterioration of the bindings. The barrier shall be entrenched and

backfilled. A trench shall be excavated the width of a bale and the length of the proposed barrier to a minimum depth of 100 mm. After the bales are staked and chinked (gaps filled by wedging with straw), the excavated soil shall be backfilled against the barrier. Backfill soil shall conform to the ground level on the downhill side and shall be built up to 100 mm against the uphill side of the barrier. Loose straw shall be scattered over the area immediately uphill from a straw bale barrier to increase barrier efficiency. Each bale shall be securely anchored by at least two stakes driven through the bale. The first stake or steel post in each bale shall be driven toward the previously laid bale to force the bales together. Stakes or steel pickets shall be driven a minimum 450 mm deep into the ground to securely anchor the bales.

3.3 MAINTENANCE

The Contractor shall maintain the temporary and permanent vegetation, erosion and sediment control measures, and other protective measures in good and effective operating condition by performing routine inspections to determine condition and effectiveness, by restoration of destroyed vegetative cover, and by repair of erosion and sediment control measures and other protective measures. The following procedures shall be followed to maintain the protective measures.

3.3.1 Silt Fence Maintenance

Silt fences shall be inspected in accordance with paragraph INSPECTIONS. Any required repairs shall be made promptly. Close attention shall be paid to the repair of damaged silt fence resulting from end runs and undercutting. Should the fabric on a silt fence decompose or become ineffective, and the barrier is still necessary, the damaged fabric shall be removed and replaced promptly by splicing new sections with a minimum of 150 mm overlap. Sediment deposits shall be removed when deposits reach one-third of the height of the barrier. When a silt fence is no longer required, it shall be removed. The immediate area occupied by the fence and any sediment deposits shall be shaped to an acceptable grade. The areas disturbed by this shaping shall be seeded in accordance with Section 02935 TURF.

3.3.2 Straw Bale Maintenance

Straw bale barriers shall be inspected in accordance with paragraph INSPECTIONS. Close attention shall be paid to the repair of damaged bales, end runs and undercutting beneath bales. Necessary replacement of bales shall be accomplished promptly. Sediment deposits shall be removed when deposits reach one-half of the height of the barrier. Bale rows used to retain sediment shall be turned uphill at each end of each row. When a straw bale barrier is no longer required, it shall be removed. The immediate area occupied by the bales and any sediment deposits shall be shaped to an acceptable grade. The areas disturbed by this shaping shall be seeded in accordance with Section 02935 TURF.

3.4 INSPECTIONS

3.4.1 General

The Contractor shall inspect disturbed areas of the construction site, areas used for storage of materials that are exposed to precipitation that have not been finally stabilized, stabilization practices, structural practices, other controls, and area where vehicles exit the site at least

once every seven (7) calendar days and within 24 hours of the end of any storm that produces 13 mm or more rainfall at the site. Where sites have been finally stabilized, such inspection shall be conducted at least once every month.

3.4.2 Inspections Details

Disturbed areas and areas used for material storage that are exposed to precipitation shall be inspected for evidence of, or the potential for, pollutants entering the drainage system. Erosion and sediment control measures identified in the Storm Water Pollution Prevention Plan shall be observed to ensure that they are operating correctly. Discharge locations or points shall be inspected to ascertain whether erosion control measures are effective in preventing significant impacts to receiving waters. Locations where vehicles exit the site shall be inspected for evidence of offsite sediment tracking.

3.4.3 Inspection Reports

For each inspection conducted, the Contractor shall prepare a report summarizing the scope of the inspection, name(s) and qualifications of personnel making the inspection, the date(s) of the inspection, major observations relating to the implementation of the Storm Water Pollution Prevention Plan, maintenance performed, and actions taken. The report shall be furnished to the Contracting Officer within 24 hours of the inspection as a part of the Contractor's daily CQC REPORT. A copy of the inspection report shall be maintained on the job site.

-- End of Section --

SECTION 01410

ENVIRONMENT PROTECTION

1.1 SUBMITTALS

Government approval is required for submittals with a "GA" designation; submittals having an "FIO" designation are for information only. The following shall be submitted in accordance with Section 01330 SUBMITTAL PROCEDURES:

SD-08 Statements

Environmental Protection Plan; FIO

1.2 GENERAL REQUIREMENTS

The Contractor shall perform the work minimizing environmental pollution and damage as the result of construction operations. Environmental pollution and damage is the presence of chemical, physical, or biological elements or agents which adversely affect human health or welfare; unfavorably alter ecological balances of importance to human life; affect other species of importance to humankind; or degrade the utility of the environment for aesthetic, cultural and/or historical purposes. The control of environmental pollution and damage requires consideration of land, water, and air, and includes management of visual aesthetics, noise, solid waste, as well as other pollutants. The environmental resources within the project boundaries and those affected outside the limits of permanent work shall be protected during the entire duration of this contract.

1.2.1 Subcontractors

The Contractor shall ensure compliance with this section by subcontractors.

1.2.2 Environmental Protection Plan

The Contractor shall submit an environmental protection plan within 15 days after receipt of the notice to proceed. Approval of the Contractor's plan will not relieve the Contractor of responsibility for adequate and continuing control of pollutants and other environmental protection measures. The environmental protection plan shall include, but shall not be limited to, the following:

a. A list of Federal, State, and local laws, regulations, and permits concerning environmental protection, pollution control and abatement that are applicable to the Contractor's proposed operations and the requirements imposed by those laws, regulations, and permits.

b. Methods for protection of features to be preserved within authorized work areas like trees, shrubs, vines, grasses and ground cover, landscape features, air and water quality, fish and wildlife, soil, historical, archaeological, and cultural resources.

c. Procedures to be implemented to provide the required environmental

protection, to comply with the applicable laws and regulations, and to correct pollution due to accident, natural causes, or failure to follow the procedures of the environmental protection plan.

d. Location of the solid waste disposal area.

e. Drawings showing locations of any proposed temporary excavations or embankments for haul roads, stream crossings, material storage areas, structures, sanitary facilities, and stockpiles of excess or spoil materials.

f. Environmental monitoring plans for the job site, including land, water, air, and noise monitoring.

g. Traffic control plan including measures to reduce erosion of temporary roadbeds by construction traffic, especially during wet weather, and the amount of mud transported onto paved public roads by vehicles or runoff.

h. Methods of protecting surface and ground water during construction activities.

i. Plan showing the proposed activity in each portion of the work area and identifying the areas of limited use or nonuse. Plan should include measures for marking the limits of use areas.

j. Drawing of borrow area location. Protection measures required at the work site shall apply to the borrow areas including final restoration for subsequent beneficial use of the land.

k. A recycling and waste prevention plan with a list of measures to reduce consumption of energy and natural resources; for example: the possibility to shred fallen trees and use them as mulch shall be considered as an alternative to burning or burial.

l. A settling pond removal plan 120 days prior to removal work. The plan shall include the method of removing and testing of the collected sediment.

m. Training for Contractor's personnel during the construction period.

n. Hazardous materials list, hazardous waste storage plan and hazardous waste generated list.

o. Material Safety Data Sheet (MSDS) Package.

p. Preconstruction survey.

1.2.3 Permits

The Contractor shall obtain all needed permits or licenses. The Government will not obtain any permits for this project; see Contract Clause PERMITS AND RESPONSIBILITIES. The State department of natural resources, through the national pollutant discharge elimination system (NPDES), requires general permits, a notice of intent, and a notice of discontinuation. The Contractor shall be responsible for implementing the terms and requirements of the appropriate permits as needed and for payment of all fees.

1.2.4 Preconstruction Survey

Prior to starting any onsite construction activities, the Contractor and the Contracting Officer shall make a joint condition survey after which the Contractor shall prepare a brief report indicating on a layout plan the condition of trees, shrubs and grassed areas immediately adjacent to work sites and adjacent to the assigned storage area and access routes as applicable. This report will be signed by both the Contracting Officer and the Contractor upon mutual agreement as to its accuracy and completeness.

1.2.5 Meetings

The Contractor shall meet with representatives of the Contracting Officer to alter the environmental protection plan as needed for compliance with the environmental pollution control program.

1.2.6 Notification

The Contracting Officer will notify the Contractor in writing of any observed noncompliance with the previously mentioned Federal, State or local laws or regulations, permits, and other elements of the Contractor's environmental protection plan. The Contractor shall, after receipt of such notice, inform the Contracting Officer of proposed corrective action and take such action when approved. If the Contractor fails to comply promptly, the Contracting Officer may issue an order stopping all or part of the work until satisfactory corrective action has been taken. No time extensions shall be granted or costs or damages allowed to the Contractor for any such suspensions.

1.2.7 Litigation

If work is suspended, delayed, or interrupted due to a court order of competent jurisdiction, the Contracting Officer will determine whether the order is due in any part to the acts or omissions of the Contractor, or subcontractors at any tier, not required by the terms of the contract. If it is determined that the order is not due to Contractor's failing, such suspension, delay, or interruption shall be considered as ordered by the Contracting Officer in the administration of the contract under the contract clause SUSPENSION OF WORK.

1.2.8 Previously Used Equipment

The Contractor shall thoroughly clean all construction equipment previously used at other sites before it is brought into the work areas, ensuring that soil residuals are removed and that egg deposits from plant pests are not present; the Contractor shall consult with the USDA jurisdictional office for additional cleaning requirements.

1.2.9 Payment

No separate payment will be made for work covered under this section; all costs associated with this section shall be included in the contract unit and/or lump sum prices in the Bidding Schedule.

1.3 LAND RESOURCES

The Contractor shall confine all activities to areas defined by the drawings and specifications. Prior to the beginning of any construction, the Contractor shall identify the land resources to be preserved within the work area. Except in areas indicated on the drawings or specified to be

cleared, the Contractor shall not remove, cut, deface, injure, or destroy land resources including trees, shrubs, vines, grasses, topsoil, and land forms without permission. No ropes, cables, or guys shall be fastened to or attached to any trees for anchorage unless specifically authorized. Where such emergency use is permitted, the Contractor shall provide effective protection for land and vegetation resources at all times as defined in the following subparagraphs. Stone, earth or other material displaced into uncleared areas shall be removed.

1.3.1 Work Area Limits

Prior to any construction, the Contractor shall mark the areas that need not be disturbed under this contract. Isolated areas within the general work area which are to be saved and protected shall also be marked or fenced. Monuments and markers shall be protected before construction operations commence. Where construction operations are to be conducted during darkness, the markers shall be visible. The Contractor's personnel shall be knowledgeable of the purpose for marking and/or protecting particular objects.

1.3.2 Landscape

Trees, shrubs, vines, grasses, land forms and other landscape features indicated and defined on the drawings to be preserved shall be clearly identified by marking, fencing, or wrapping with boards, or any other approved techniques.

1.3.3 Unprotected Erodible Soils

Earthwork brought to final grade shall be finished as indicated. Side slopes and back slopes shall be protected as soon as practicable upon completion of rough grading. All earthwork shall be planned and conducted to minimize the duration of exposure of unprotected soils. Except in cases where the constructed feature obscures borrow areas, quarries, and waste material areas, these areas shall not initially be totally cleared. Clearing of such areas shall progress in reasonably sized increments as needed to use the developed areas as approved by the Contracting Officer.

1.3.4 Disturbed Areas

The Contractor shall effectively prevent erosion and control sedimentation through approved methods including, but not limited to, the following:

a. Retardation and control of runoff. Runoff from the construction site or from storms shall be controlled, retarded, and diverted to protected drainage courses by means of diversion ditches, benches, berms, and by any measures required by area wide plans under the Clean Water Act.

b. Erosion and sedimentation control devices. The Contractor shall construct or install temporary and permanent erosion and sedimentation control features as indicated on the drawings. Berms, dikes, drains, sedimentation basins, grassing, and mulching shall be maintained until permanent drainage and erosion control facilities are completed and operative.

c. Sediment basins. Sediment from construction areas shall be trapped in temporary or permanent sediment basins in accordance with the drawings. The basins shall accommodate the runoff of a local 5 year

storm. After each storm, the basins shall be pumped dry and accumulated sediment shall be removed to maintain basin effectiveness. Overflow shall be controlled by paved weirs or by vertical overflow pipes. The collected topsoil sediment shall be reused for fill on the construction site, and/or stockpiled for use at another site. The Contractor shall institute effluent quality monitoring programs as required by State and local environmental agencies.

1.3.5 Contractor Facilities and Work Areas

The Contractor's field offices, staging areas, stockpile storage, and temporary buildings shall be placed in areas designated on the drawings or as directed by the Contracting Officer. Temporary movement or relocation of Contractor facilities shall be made only when approved. Borrow areas shall be managed to minimize erosion and to prevent sediment from entering nearby waters. Spoil areas shall be managed and controlled to limit spoil intrusion into areas designated on the drawings and to prevent erosion of soil or sediment from entering nearby waters. Spoil areas shall be developed in accordance with the grading plan indicated on the drawings. Temporary excavation and embankments for plant and/or work areas shall be controlled to protect adjacent areas from despoilment.

1.3.6 Protection of Land Areas

Except for any work on storage areas and access routes specifically assigned for the use of the Contractor under this contract, the land areas outside the limits of permanent work performed under this contract shall, in accordance with CONTRACT CLAUSE: PROTECTION OF EXISTING VEGETATION, STRUCTURE, UTILITIES AND IMPROVEMENTS, be preserved in their present condition. Contractor shall confine his construction activities to areas defined for work on the plans or specifically assigned for his use. In accordance with CONTRACT CLAUSE: OPERATIONS AND STORAGE AREAS, storage and related areas and access routes required temporarily by the Contractor in the performance of the work will be assigned by the Contracting Officer. No other areas on Government premises shall be used by the Contractor without written consent of the Contracting Officer.

1.3.7 Dust Control

The Contractor shall maintain all excavations, stockpiles, access roads, waste areas, and all other work areas free from excess dust to such reasonable degree as to avoid causing a hazard or nuisance to the Using Service or to others. Approved temporary methods consisting of sprinkling, chemical treatment, or similar methods will be permitted to control dust. Dust control shall be performed as the work proceeds and whenever a dust nuissance or hazard occurs.

1.3.8 Erosion Control

Surface drainage from cuts and fills within the construction limits, whether or not completed, and from borrow and waste disposal areas, shall be graded to control erosion within acceptable limits. Temporary control measures shall be provided and maintained until permanent drainage facilities area completed and operative. The area of bare soil exposed at any one time by construction operations should be held to a minimum.

1.3.9 Corrective Action

The Contractor shall, upon receipt of a notice in writing of any noncompliance with the foregoing provisions, take immediate corrective action. If the Contractor fails or refuses to comply promptly, the Contracting Officer may issue an order stopping all or part of the work until satisfactory corrective action has been taken. No part of the time lost due to any such stop orders shall be made the subject of a claim for extension of time or for excess costs of damages by the Contractor unless it was later determined that the Contractor was in compliance.

1.4 WATER RESOURCES

The Contractor shall keep construction activities under surveillance, management, and control to avoid pollution of surface and ground waters. Toxic or hazardous chemicals shall not be applied to soil or vegetation when such application may cause contamination of the fresh water reserve. Monitoring of water areas affected by construction shall be the Contractor's responsibility. All water areas affected by construction activities shall be monitored by the Contractor. The Contractor shall control the disposal of fuels, oils, bituments, calcium chloride, acids, or harmful materials, both on and off the Government premises, and shall comply with applicable Federal, State, and County and Municipal laws concerning pollution of rivers and streams while performing work under this contract.

1.4.1 Washing and Curing Water

Waste waters directly derived from construction activities shall not be allowed to enter water areas. Waste waters shall be collected and placed in retention ponds where suspended material can be settled out or the water evaporates to separate pollutants from the water. Analysis shall be performed and results reviewed and approved before water in retention ponds is discharged.

1.4.2 Cofferdam and Diversion Operations

Construction operations for dewatering, removal of cofferdams, tailrace excavation, and tunnel closure shall be controlled at all times to limit the impact of water turbidity on the habitat for wildlife and on water quality for downstream use.

1.4.3 Stream Crossings

Stream crossings shall allow movement of materials or equipment without violating water pollution control standards of the Federal, State or local government.

1.4.4 Fish and Wildlife

The Contractor shall minimize interference with, disturbance to, and damage of fish and wildlife. Species that require specific attention along with measures for their protection shall be listed by the Contractor prior to beginning of construction operations.

1.5 AIR RESOURCES

Equipment operation and activities or processes performed by the Contractor in accomplishing the specified construction shall be in accordance with the State's rules and all Federal emission and performance laws and standards. Ambient Air Quality Standards set by the Environmental Protection Agency

shall be maintained. Monitoring of air quality shall be the Contractor's responsibility. All air areas affected by the construction activities shall be monitored by the Contractor. Monitoring results will be periodically reviewed by the Government to ensure compliance.

1.5.1 Particulates

Dust particles; aerosols and gaseous by-products from construction activities; and processing and preparation of materials, such as from asphaltic batch plants; shall be controlled at all times, including weekends, holidays and hours when work is not in progress. The Contractor shall maintain excavations, stockpiles, haul roads, permanent and temporary access roads, plant sites, spoil areas, borrow areas, and other work areas within or outside the project boundaries free from particulates which would cause the air pollution standards to be exceeded or which would cause a hazard or a nuisance. Sprinkling, chemical treatment of an approved type, light bituminous treatment, baghouse, scrubbers, electrostatic precipitators or other methods will be permitted to control particulates in the work area. Sprinkling, to be efficient, must be repeated to keep the disturbed area damp at all times. The Contractor must have sufficient, competent equipment available to accomplish these tasks. Particulate control shall be performed as the work proceeds and whenever a particulate nuisance or hazard occurs.

1.5.2 Hydrocarbons and Carbon Monoxide

Hydrocarbons and carbon monoxide emissions from equipment shall be controlled to Federal and State allowable limits at all times.

1.5.3 Odors

Odors shall be controlled at all times for all construction activities, processing and preparation of materials.

1.5.4 Sound Intrusions

The Contractor shall keep construction activities under surveillance and control to minimize environment damage by noise. The Contractor shall comply with the provisions of the State of New York rules.

1.6 WASTE DISPOSAL

Disposal of wastes shall be as specified in Section 02050 DEMOLITION and as specified below.

1.6.1 Solid Wastes

Solid wastes (excluding clearing debris) shall be placed in containers which are emptied on a regular schedule. Handling and disposal shall be conducted to prevent contamination. Segregation measures shall be employed so that no hazardous or toxic waste will become co-mingled with solid waste. The Contractor shall transport solid waste off Government property and dispose of it in compliance with Federal, State, and local requirements for solid waste disposal. The Contractor shall comply with Federal, State, and local laws and regulations pertaining to the use of landfill areas.

1.6.2 Chemical Wastes

Chemicals shall be dispensed ensuring no spillage to ground or water.

Periodic inspections of dispensing areas to identify leakage and initiate corrective action shall be performed and documented. This documentation will be periodically reviewed by the Government. Chemical waste shall be collected in corrosion resistant, compatible containers. Collection drums shall be monitored and removed to a staging or storage area when contents are within 150 mm of the top. Wastes shall be disposed of in accordance with Federal and local laws and regulations.

1.6.3 Hazardous Wastes

The Contractor shall take sufficient measures to prevent spillage of hazardous and toxic materials during dispensing and shall collect waste in suitable containers observing compatibility. The Contractor shall transport hazardous waste off Government property and dispose of it in compliance with Federal and local laws and regulations. Spills of hazardous or toxic materials shall be immediately reported to the Contracting Officer. Cleanup and cleanup costs due to spills shall be the Contractor's responsibility.

1.6.4 Burning

Burning will be allowed only if permitted in other sections of the specifications or authorized in writing by the Contracting Officer. The specific time, location, and manner of burning shall be subject to approval. Fires shall be confined to a closed vessel, guarded at all times, and shall be under constant surveillance until they have burned out or have been extinguished. Burning shall be thorough reducing the materials to ashes.

1.7 HISTORICAL, ARCHAEOLOGICAL, AND CULTURAL RESOURCES

Existing historical, archaeological, and cultural resources within the Contractor's work area will be so designated by the Contracting Officer if any has been identified. The Contractor shall take precautions to preserve all such resources as they existed at the time they were first pointed out. The Contractor shall provide and install protection for these resources and be responsible for their preservation during the life of the contract. If during excavation or other construction activities any previously unidentified or unanticipated resources are discovered or found, all activities that may damage or alter such resources shall be temporarily suspended. Resources covered by this paragraph include but are not limited to: any human skeletal remains or burials; artifacts; shell, midden, bone, charcoal, or other deposits; rocks or coral alignments, pavings, wall, or other constructed features; and any indication of agricultural or other human activities. Upon such discovery or find, the Contractor shall immediately notify the Contracting Officer. While waiting for instructions the Contractor shall record, report, and preserve the finds.

1.8 POST CONSTRUCTION CLEANUP

The Contractor shall clean up all areas used for construction.

1.8.1

Contractor shall, unless otherwise instructed in writing by the Contracting Officer, obliterate all signs of temporary construction facilities such as haul roads, work areas, structures, foundation of temporary structures, stockpiles of excess or waste materials, and other vestiges of construction prior to final acceptance of the work. The disturbed areas shall be graded

and filled and the entire area seeded.

1.9 RESTORATION OF LANDSCAPE DAMAGE

Any landscape, not designated on the plan to be removed by construction operations, damaged by the Contractor's equipment or operations shall be restored as nearly as possible to its original condition at the Contractor's expense.

1.10 MAINTENANCE OF POLLUTION FACILITIES

The Contractor shall maintain permanent and temporary pollution control facilities and devices for the duration of the contract or for that length of time construction activities create the particular pollutant.

1.11 TRAINING OF CONTRACTOR PERSONNEL

The Contractor's personnel shall be trained in all phases of environmental protection. The training shall include methods of detecting and avoiding pollution, familiarization with pollution standards, both statutory and contractual, and installation and care of devices, vegetative covers, and instruments required for monitoring purposes to ensure adequate and continuous environmental pollution control.

-- End of Section --

SECTION 01415

METRIC MEASUREMENTS

1.1 REFERENCES

The publications listed below form a part of this specification to the extent referenced. The publications are referred to in the text by basic designation only.

AMERICAN SOCIETY FOR TESTING AND MATERIALS (ASTM)

ASTM E 380	(1993) Practice for Use of the International System of Units (SI)
ASTM E 621	(1994) Practice for Use of Metric (SI) Units in Building Design and Construction

1.2 GENERAL

This project includes metric units of measurements. The metric units used are the International System of Units (SI) developed and maintained by the General Conference on Weights and Measures (CGPM); the name International System of Units and the international abbreviation SI were adopted by the 11th CGPM in 1960. A number of circumstances require that both metric SI units and English inch-pound (I-P) units be included in a section of the specifications. When both metric and I-P measurements are included, the section may contain measurements for products that are manufactured to I-P dimensions and then expressed in mathematically converted metric value (soft metric) or, it may contain measurements for products that are manufactured to an industry recognized rounded metric (hard metric) dimensions but are allowed to be substituted by I-P products to comply with the law. Dual measurements are also included to indicate industry and/or Government standards, test values or other controlling factors, such as the code requirements where I-P values are needed for clarity or to trace back to the referenced standards, test values or codes.

1.3 USE OF MEASUREMENTS

Measurements shall be either in SI or I-P units as indicated, except for soft metric measurements or as otherwise authorized. The Contractor shall be responsible for all associated labor and materials when authorized to substitute one system of units for another and for the final assembly and performance of the specified work and/or products.

1.3.1 Hard Metric

A hard metric measurement is indicated by an SI value with no expressed correlation to an I-P value, i.e., where an SI value is not an exact mathematical conversion of an I-P value, such as the use of 100 mm in lieu of 4 inches. Hard metric measurements are often used for field data such as distance from one point to another or distance above the floor. Products are considered to be hard metric when they are manufactured to metric dimensions or have an industry recognized metric designation.

1.3.2 Soft Metric

a. A soft metric measurement is indicated by an SI value which is a mathematical conversion of the I-P value shown in parentheses (e.g. 38.1 mm (1-1/2 inches)). Soft metric measurements are used for measurements pertaining to products, test values, and other situations where the I-P units are the standard for manufacture, verification, or other controlling factor. The I-P value shall govern while the metric measurement is provided for information.

b. A soft metric measurement is also indicated for products that are manufactured in industry designated metric dimensions but are required by law to allow substitute I-P products. These measurements are indicated by a manufacturing hard metric product dimension followed by the substitute I-P equivalent value in parentheses (e.g., 190 x 190 x 390 mm (7-5/8 x 7-5/8 x 15-5/8 inches)).

1.3.3 Neutral

A neutral measurement is indicated by an identifier which has no expressed relation to either an SI or an I-P value (e.g., American Wire Gage (AWG) which indicates thickness but in itself is neither SI nor I-P).

1.4 COORDINATION

Discrepancies, such as mismatches or product unavailability, arising from use of both metric and non-metric measurements and discrepancies between the measurements in the specifications and the measurements in the drawings shall be brought to the attention of the Contracting Officer for resolution.

1.5 RELATIONSHIP TO SUBMITTALS

Submittals for Government approval or for information only shall cover the SI or I-P products actually being furnished for the project. The Contractor shall submit the required drawings and calculations in the same units used in the contract documents describing the product or requirement unless otherwise instructed or approved. The Contractor shall use ASTM E 380 and ASTM E 621 as the basis for establishing metric measurements required to be used in submittals.

-- End of Section --

SECTION 01451

CONTRACTOR QUALITY CONTROL

PART 1 GENERAL

1.1 REFERENCES

The publications listed below form a part of this specification to the extent referenced. The publications are referred to in the text by basic designation only.

AMERICAN SOCIETY FOR TESTING AND MATERIALS (ASTM)

ASTM D 3740	(1996) Minimum Requirements for Agencies Engaged in the Testing and/or Inspection of Soil and Rock as Used in Engineering Design and Construction
ASTM E 329	(1995b) Agencies Engaged in the Testing and/or Inspection of Materials Used in Construction

1.2 SUBMITTALS

Government approval is required for submittals with a "GA" designation; submittals having an "FIO" designation are for information only. The following shall be submitted in accordance with Section 01330 SUBMITTAL PROCEDURES:

SD-08 Statements

Contractor Quality Control (CQC) Plan; FIO

1.3 PAYMENT

Separate payment will not be made for providing and maintaining an effective Quality Control program, and all costs associated therewith shall be included in the applicable unit prices or lump-sum prices contained in the Bidding Schedule.

PART 2 PRODUCTS (Not Applicable)

PART 3 EXECUTION

3.1 GENERAL

The Contractor is responsible for quality control and shall establish and maintain an effective quality control system in compliance with the Contract Clause titled "Inspection of Construction." The quality control system shall consist of plans, procedures, and organization necessary to produce an end product which complies with the contract requirements. The system shall cover all construction operations, both onsite and offsite, and shall be keyed to the proposed construction sequence. The project superintendent will be held responsible for the quality of work on the job and is subject to removal by the Contracting Officer for non-compliance

with quality requirements specified in the contract. The project superintendent in this context shall mean the individual with the responsibility for the overall management of the project including quality and production.

3.2 QUALITY CONTROL PLAN

3.2.1 General

The Contractor shall furnish for review by the Government, not later than 90 days after receipt of notice to proceed, the Contractor Quality Control (CQC) Plan proposed to implement the requirements of the Contract Clause titled "Inspection of Construction." The plan shall identify personnel, procedures, control, instructions, test, records, and forms to be used. The Government will consider an interim plan for the first 90 days of operation. Construction will be permitted to begin only after acceptance of the CQC Plan or acceptance of an interim plan applicable to the particular feature of work to be started. Work outside of the features of work included in an accepted interim plan will not be permitted to begin until acceptance of a CQC Plan or another interim plan containing the additional features of work to be started.

3.2.2 Content of the CQC Plan

The CQC Plan shall include, as a minimum, the following to cover all construction operations, both onsite and offsite, including work by subcontractors, fabricators, suppliers, and purchasing agents:

a. A description of the quality control organization, including a chart showing lines of authority and acknowledgment that the CQC staff shall implement the three phase control system for all aspects of the work specified. The staff shall include a CQC System Manager who shall report to the project superintendent.

b. The name, qualifications (in resume format), duties, responsibilities, and authorities of each person assigned a CQC function.

c. A copy of the letter to the CQC System Manager signed by an authorized official of the firm which describes the responsibilities and delegates sufficient authorities to adequately perform the functions of the CQC System Manager, including authority to stop work which is not in compliance with the contract. The CQC System Manager shall issue letters of direction to all other various quality control representatives outlining duties, authorities, and responsibilities. Copies of these letters shall also be furnished to the Government.

d. Procedures for scheduling, reviewing, certifying, and managing submittals, including those of subcontractors, offsite fabricators, suppliers, and purchasing agents. These procedures shall be in accordance with Section 01330 SUBMITTAL PROCEDURES.

e. Control, verification, and acceptance testing procedures for each specific test to include the test name, specification paragraph requiring test, feature of work to be tested, test frequency, and person responsible for each test. (Laboratory facilities will be approved by the Contracting Officer.)

f. Procedures for tracking preparatory, initial, and follow-up control phases and control, verification, and acceptance tests including documentation.

g. Procedures for tracking construction deficiencies from identification through acceptable corrective action. These procedures shall establish verification that identified deficiencies have been corrected.

h. Reporting procedures, including proposed reporting formats.

i. A list of the definable features of work. A definable feature of work is a task which is separate and distinct from other tasks, has separate control requirements, and may be identified by different trades or disciplines, or it may be work by the same trade in a different environment. Although each section of the specifications may generally be considered as a definable feature of work, there are frequently more than one definable features under a particular section. This list will be agreed upon during the coordination meeting.

3.2.3 Acceptance of Plan

Acceptance of the Contractor's plan is required prior to the start of construction. Acceptance is conditional and will be predicated on satisfactory performance during the construction. The Government reserves the right to require the Contractor to make changes in his CQC Plan and operations including removal of personnel, as necessary, to obtain the quality specified.

3.2.4 Notification of Changes

After acceptance of the CQC Plan, the Contractor shall notify the Contracting Officer in writing of any proposed change. Proposed changes are subject to acceptance by the Contracting Officer.

3.3 COORDINATION MEETING

After the Preconstruction Conference, before start of construction, and prior to acceptance by the Government of the CQC Plan, the Contractor shall meet with the Contracting Officer or Authorized Representative and discuss the Contractor's quality control system. The CQC Plan shall be submitted for review a minimum of 14 calendar days prior to the Coordination Meeting. During the meeting, a mutual understanding of the system details shall be developed, including the forms for recording the CQC operations, control activities, testing, administration of the system for both onsite and offsite work, and the interrelationship of Contractor's Management and control with the Government's Quality Assurance. Minutes of the meeting shall be prepared by the Government and signed by both the Contractor and the Contracting Officer. The minutes shall become a part of the contract file. There may be occasions when subsequent conferences will be called by either party to reconfirm mutual understandings and/or address deficiencies in the CQC system or procedures which may require corrective action by the Contractor.

3.4 QUALITY CONTROL ORGANIZATION

3.4.1 General

The requirements for the CQC organization are a CQC System Manager and sufficient number of additional qualified personnel to ensure contract compliance. The Contractor shall provide a CQC organization which shall be at the site at all times during progress of the work and with complete authority to take any action necessary to ensure compliance with the contract. All CQC staff members shall be subject to acceptance by the Contracting Officer.

3.4.2 CQC System Manager

The Contractor shall identify as CQC System Manager an individual within the onsite work organization who shall be responsible for overall management of CQC and have the authority to act in all CQC matters for the Contractor. The CQC System Manager shall be a graduate engineer, graduate architect, or a graduate of construction management, with a minimum of 2 years construction experience on construction similar to this contract. This CQC System Manager shall be on the site at all times during construction and shall be employed by the prime Contractor. The CQC System Manager shall be assigned no duties other than Quality Control. An alternate for the CQC System Manager shall be identified in the plan to serve in the event of the System Manager's absence. The requirements for the alternate shall be the same as for the designated CQC System Manager.

3.4.3 CQC Personnel

In addition to CQC personnel specified elsewhere in the contract, the Contractor shall provide as part of the CQC organization specialized personnel to assist the CQC System Manager for the following areas: electrical, mechanical, civil, structural, environmental, and architectural. These individuals shall be directly employed by the prime Contractor; be responsible to the CQC System Manager; be physically present at the construction site during work on their areas of responsibility; have the necessary education and/or experience in accordance with the experience matrix listed herein. These individuals may perform other duties but must be allowed sufficient time to perform their assigned quality control duties as described in the Quality Control Plan.

Experience Matrix

	Area	Qualifications
a.	Civil	Graduate Civil Engineer with 2 years experience in the type of work being performed on this project or technician with 5 yrs related experience
b.	Mechanical	Graduate Mechanical Engineer with 2 yrs experience or person with 5 yrs related experience
c.	Electrical	Graduate Electrical Engineer with 2 yrs related experience or person with 5 yrs related experience

Experience Matrix

	Area	Qualifications
d.	Structural	Graduate Structural Engineer with 2 yrs experience or person with 5 yrs related experience
e.	Architectural	Graduate Architect with 2 yrs experience or person with 5 yrs related experience
f.	Environmental	Graduate Environmental Engineer with 3 yrs experience

3.4.4 Additional Requirement

In addition to the above experience and education requirements the CQC System Manager shall have completed the course entitled "Construction Quality Management For Contractors".

3.4.5 Organizational Changes

The Contractor shall maintain the CQC staff at full strength at all times. When it is necessary to make changes to the CQC staff, the Contractor shall revise the CQC Plan to reflect the changes and submit the changes to the Contracting Officer for acceptance.

3.5 SUBMITTALS

Submittals shall be made as specified in Section 01330 SUBMITTAL PROCEDURES. The CQC organization shall be responsible for certifying that all submittals are in compliance with the contract requirements.

3.6 CONTROL

Contractor Quality Control is the means by which the Contractor ensures that the construction, to include that of subcontractors and suppliers, complies with the requirements of the contract. At least three phases of control shall be conducted by the CQC System Manager for each definable feature of work as follows:

3.6.1 Preparatory Phase

This phase shall be performed prior to beginning work on each definable feature of work, after all required plans/documents/materials are approved/accepted, and after copies are at the work site. This phase shall include:

a. A review of each paragraph of applicable specifications.

b. A review of the contract drawings.

c. A check to assure that all materials and/or equipment have been tested, submitted, and approved.

d. Review of provisions that have been made to provide required control inspection and testing.

e. Examination of the work area to assure that all required preliminary work has been completed and is in compliance with the contract.

f. A physical examination of required materials, equipment, and sample work to assure that they are on hand, conform to approved shop drawings or submitted data, and are properly stored.

g. A review of the appropriate activity hazard analysis to assure safety requirements are met.

h. Discussion of procedures for controlling quality of the work including repetitive deficiencies. Document construction tolerances and workmanship standards for that feature of work.

i. A check to ensure that the portion of the plan for the work to be performed has been accepted by the Contracting Officer.

j. Discussion of the initial control phase.

k. The Government shall be notified at least 48 hours in advance of beginning the preparatory control phase. This phase shall include a meeting conducted by the CQC System Manager and attended by the superintendent, other CQC personnel (as applicable), and the foreman responsible for the definable feature. The results of the preparatory phase actions shall be documented by separate minutes prepared by the CQC System Manager and attached to the daily CQC report. The Contractor shall instruct applicable workers as to the acceptable level of workmanship required in order to meet contract specifications.

3.6.2 Initial Phase

This phase shall be accomplished at the beginning of a definable feature of work. The following shall be accomplished:

a. A check of work to ensure that it is in full compliance with contract requirements. Review minutes of the preparatory meeting.

b. Verify adequacy of controls to ensure full contract compliance. Verify required control inspection and testing.

c. Establish level of workmanship and verify that it meets minimum acceptable workmanship standards. Compare with required sample panels as appropriate.

d. Resolve all differences.

e. Check safety to include compliance with and upgrading of the safety plan and activity hazard analysis. Review the activity analysis with each worker.

f. The Government shall be notified at least 48 hours in advance of beginning the initial phase. Separate minutes of this phase shall be prepared by the CQC System Manager and attached to the daily CQC report. Exact location of initial phase shall be indicated for

future reference and comparison with follow-up phases.

g. The initial phase should be repeated for each new crew to work onsite, or any time acceptable specified quality standards are not being met.

3.6.3 Follow-up Phase

Daily checks shall be performed to assure control activities, including control testing, are providing continued compliance with contract requirements, until completion of the particular feature of work. The checks shall be made a matter of record in the CQC documentation. Final follow-up checks shall be conducted and all deficiencies corrected prior to the start of additional features of work which may be affected by the deficient work. The Contractor shall not build upon nor conceal non-conforming work.

3.6.4 Additional Preparatory and Initial Phases

Additional preparatory and initial phases shall be conducted on the same definable features of work if the quality of on-going work is unacceptable, if there are changes in the applicable CQC staff, onsite production supervision or work crew, if work on a definable feature is resumed after a substantial period of inactivity, or if other problems develop.

3.7 TESTS

3.7.1 Testing Procedure

The Contractor shall perform specified or required tests to verify that control measures are adequate to provide a product which conforms to contract requirements. Upon request, the Contractor shall furnish to the Government duplicate samples of test specimens for possible testing by the Government. Testing includes operation and/or acceptance tests when specified. The Contractor shall procure the services of a Corps of Engineers approved testing laboratory or establish an approved testing laboratory at the project site. The Contractor shall perform the following activities and record and provide the following data:

a. Verify that testing procedures comply with contract requirements.

b. Verify that facilities and testing equipment are available and comply with testing standards.

c. Check test instrument calibration data against certified standards.

d. Verify that recording forms and test identification control number system, including all of the test documentation requirements, have been prepared.

e. Results of all tests taken, both passing and failing tests, shall be recorded on the CQC report for the date taken. Specification paragraph reference, location where tests were taken, and the sequential control number identifying the test shall be given. If approved by the Contracting Officer, actual test reports may be submitted later with a reference to the test number and date taken. An information copy of tests performed by an offsite or commercial test facility shall be provided directly to the Contracting Officer. Failure to submit timely test reports as stated may

result in nonpayment for related work performed and disapproval of the test facility for this contract.

3.7.2 Testing Laboratories

3.7.2.1 Capability Check

The Government reserves the right to check laboratory equipment in the proposed laboratory for compliance with the standards set forth in the contract specifications and to check the laboratory technician's testing procedures and techniques. Laboratories utilized for testing soils, concrete, asphalt, and steel shall meet criteria detailed in ASTM D 3740 and ASTM E 329.

3.7.2.2 Capability Recheck

If the selected laboratory fails the capability check, the Contractor will be assessed a charge of $1500 to reimburse the Government for each succeeding recheck of the laboratory or the checking of a subsequently selected laboratory. Such costs will be deducted from the contract amount due the Contractor.

3.7.3 NOT USED

3.7.4 Furnishing or Transportation of Samples for Testing

Costs incidental to the transportation of samples or materials shall be borne by the Contractor. Samples of materials for test verification and acceptance testing by the Government shall be delivered to the Corps of Engineers Division Laboratory, as designated by the Government Representative.

Coordination for each specific test, exact delivery location, and dates will be made through the Area Office.

3.8 COMPLETION INSPECTION

3.8.1 Punch-Out Inspection

Near the completion of all work or any increment thereof established by a completion time stated in the Special Clause entitled "Commencement, Prosecution, and Completion of Work," or stated elsewhere in the specifications, the CQC System Manager shall conduct an inspection of the work and develop a punch list of items which do not conform to the approved drawings and specifications. Such a list of deficiencies shall be included in the CQC documentation, as required by paragraph DOCUMENTATION below, and shall include the estimated date by which the deficiencies will be corrected. The CQC System Manager or staff shall make a second inspection to ascertain that all deficiencies have been corrected. Once this is accomplished, the Contractor shall notify the Government that the facility is ready for the Government Pre-Final inspection.

3.8.2 Pre-Final Inspection

The Government will perform this inspection to verify that the facility is complete and ready to be occupied. A Government Pre-Final Punch List may be developed as a result of this inspection. The Contractor's CQC System Manager shall ensure that all items on this list have been corrected before notifying the Government so that a Final inspection with the customer can

be scheduled. Any items noted on the Pre-Final inspection shall be corrected in a timely manner. These inspections and any deficiency corrections required by this paragraph shall be accomplished within the time slated for completion of the entire work or any particular increment thereof if the project is divided into increments by separate completion dates.

3.8.3 Final Acceptance Inspection

The Contractor's Quality Control Inspection personnel, plus the superintendent or other primary management person, and the Contracting Officer's Representative shall be in attendance at this inspection. Additional Government personnel including, but not limited to, those from Base/Post Civil Facility Engineer user groups, and major commands may also be in attendance. The final acceptance inspection will be formally scheduled by the Contracting Officer based upon results of the Pre-Final inspection. Notice shall be given to the Contracting Officer at least 14 days prior to the final acceptance inspection and shall include the Contractor's assurance that all specific items previously identified to the Contractor as being unacceptable, along with all remaining work performed under the contract, will be complete and acceptable by the date scheduled for the final acceptance inspection. Failure of the Contractor to have all contract work acceptably complete for this inspection will be cause for the Contracting Officer to bill the Contractor for the Government's additional inspection cost in accordance with the contract clause titled "Inspection of Construction".

3.9 DOCUMENTATION

The Contractor shall maintain current records providing factual evidence that required quality control activities and/or tests have been performed. These records shall include the work of subcontractors and suppliers and shall be on an acceptable form that includes, as a minimum, the following information:

a. Contractor/subcontractor and their area of responsibility.

b. Operating plant/equipment with hours worked, idle, or down for repair.

c. Work performed each day, giving location, description, and by whom. When Network Analysis (NAS) is used, identify each phase of work performed each day by NAS activity number.

d. Test and/or control activities performed with results and references to specifications/drawings requirements. The control phase should be identified (Preparatory, Initial, Follow-up). List deficiencies noted along with corrective action.

e. Quantity of materials received at the site with statement as to acceptability, storage, and reference to specifications/drawings requirements.

f. Submittals reviewed, with contract reference, by whom, and action taken.

g. Off-site surveillance activities, including actions taken.

h. Job safety evaluations stating what was checked, results, and

instructions or corrective actions.

i. Instructions given/received and conflicts in plans and/or specifications.

j. Contractor's verification statement.

These records shall indicate a description of trades working on the project; the number of personnel working; weather conditions encountered; and any delays encountered. These records shall cover both conforming and deficient features and shall include a statement that equipment and materials incorporated in the work and workmanship comply with the contract. The original and one copy of these records in report form shall be furnished to the Government daily within 16 hours after the date covered by the report, except that reports need not be submitted for days on which no work is performed. As a minimum, one report shall be prepared and submitted for every 7 days of no work and on the last day of a no work period. All calendar days shall be accounted for throughout the life of the contract. The first report following a day of no work shall be for that day only. Reports shall be signed and dated by the CQC System Manager. The report from the CQC System Manager shall include copies of test reports and copies of reports prepared by all subordinate quality control personnel.

3.10 SAMPLE FORMS

Sample forms enclosed at the end of this section.

3.11 NOTIFICATION OF NONCOMPLIANCE

The Contracting Officer will notify the Contractor of any detected noncompliance with the foregoing requirements. The Contractor shall take immediate corrective action after receipt of such notice. Such notice, when delivered to the Contractor at the work site, shall be deemed sufficient for the purpose of notification. If the Contractor fails or refuses to comply promptly, the Contracting Officer may issue an order stopping all or part of the work until satisfactory corrective action has been taken. No part of the time lost due to such stop orders shall be made the subject of claim for extension of time or for excess costs or damages by the Contractor.

-- End of Section --

CQC TEST REPORT LIST

CQC REPORT#_____ SH_____ OF _____ DATE:_____

CONTRACTOR:_____ CONTRACT #:_____

PROJECT TITLE:_____ LOCATION:_____

SPEC REF OR DWG#	TYPE OF TEST	DATE PERFORMED	RESULTS	REMARKS

NOTE: THIS FORM SHALL BE USED BY THE CONTRACTOR TO TRACK CQC TESTING.PROVIDE ATTACHMENTS AS REQUIRED.

RECORD OF PREPARATORY AND INITIAL INSPECTIONS

DATE OF INSP	TYPE OF INSP	DEFINABLE FEATURE OF WORK (DESCRIBE)	REPORT NOS		PERSONS ATTENDING INSP	WAS MATL&/OR EQUIPMENT PHYSICALLY INSPECTED ?
			QA	QC		

NAD FORM 826
22 JULY 86

NOTE:THIS FORM SHALL BE USED BY THE CONTRACTOR TO TRACK PREP/INIT INSP'S
ATTACH ADDITIONAL RESULTS OR COMMENTS AS REQUIRED

TESTING FOR MECHANICAL AND ELECTRICAL SYSTEMS

1. Applicability:

This section applies to all mechanical and electrical system and all systems using electromagnetically driven equipment, pneumatic or electronic systems; high low voltage electrical distribution systems (except branch panels) and to any system which incorporates this section into other parts of the specification by reference. For purpose of this section a "system" is an entity comprised of a series of closely related interdependent performance of a useful function. System components shall include all software and programming as applicable for the system. Some typical example include:

a. Independently functioning HVAC System.

b. Fire Alarm Systems.

c. Public Address Systems.

d. Sprinkler Systems including alarms.

e. Telephone Systems including cable, splices cables, switching equipment, outlets and instruments.

f. Intrusion Detection System.

g. High Voltage Equipment including cable, splices, switchgear, relays, circuit breakers, fuses, transformers, instrumentation, etc.

h. Low Voltage Switchboard including incoming and outgoing feeders, circuit protection and all accessories.

2. Test Plan:

a. Not later than sixty days after Notice to Proceed, in accordance with Section "Submittals" and other paragraphs of the technical provisions, the Contract shall submit a list for approval consisting of all systems for which test plans are required. This list will be reviewed by the Government and any systems found to be missing will be required to be added by the Contractor, and appropriate test plans submitted. No work will be permitted on any of the systems until this list is submitted.

b. The Contractor shall develop test plans and schedule operational testing for the systems in the approved list. The testing shall

be in accordance with the requirements in the appropriate technical provisions and shall include as a minimum the requirements below. All testing required by applicable codes, standards, utility companies, manufacturers, suppliers, etc. shall be incorporated into the Contractor's test plans. Test plans shall list all equipment required to perform the tests, and any Government support required. It shall be in sufficient detail to permit a step-by-step approach to the test and to demonstrate that the systems operate as intended by the contract documents. It shall describe as a minimum:

1. What system is being tested including a listing of all components to be tested.

2. What individual or organization will perform testing, who will certify the tests, and qualifications of test personnel.

3. A step by step narrative of the testing procedure to by used to demonstrate contract compliance including all governing standards, such as "sequence of controls", "ASTM Standard XXX"; or IEEE Standard XXX", etc.

4. What testing equipment will be utilized.

5. What operator interaction is required.

6. What results are to be expected.

7. Seasonal limitations, if any, including dates(s) of proposed testing.

8. A complete schematic diagram (electrical, pneumatic) showing all components, and block diagram.

9. A checklist shall be developed to be used during the operational test.

c. Test plans shall be submitted for approval for all systems contained on the list submitted per para 2a. above. It is also desirable to submit all test plans as soon as possible so that the progress of the project and corresponding payments will proceed on schedule.

3. Testing Process:

a. Outlined below are a number of events relating to the status of the test plan and testing. The corresponding percentages indicate

the maximum percentage of the value of the system which will be permitted to be installed after the successful completion of the corresponding event indicated, for all systems to which this section applies. Events must be completed sequentially. Any work performed in excess of the permitted percentages will be at the Contractor's own risk and will not be paid until the event corresponding to the percentage of system value permitted to be installed is successfully completed:

	EVENT	MAX % OF SYSTEM VALUE PERMITTED TO BE INSTALLED
1.	Contractor has submitted list system that require test plans to be approved, and system work is ongoing but not test plan submitted.	50
2.	Test Plan Submitted	65
3.	Test Plan Approved*	80
4.	Successful completion of tests including submission of required documents, reports (i.e. balancing reports for all HVAC Systems), Operation and Maintenance Manuals spare parts, and spare data.	100**

* The Government will process the submittal in accordance with the time frames indicated in the specification section "Submittals". If the test plan is disapproved the Government has an additional 30 days to review the resubmittal form the date it receives the resubmittal.

** If a system involves both heating and cooling modes and one mode had been successfully tested this percentage shall be reduced to 90% until the testing is completed.

b. The Contractor may proceed with events as indicated in the above table for each system separately.

4. Operational tests including performance tests shall be conducted for an entire system, not component parts only. Test may be conducted only after an entire system has been completely installed. Contractor shall provide a minimum of 14 days notice to the Contracting Officer of scheduled tests. This notice must include the Contractor's assurance that all installed work previously identified to the Contractor as being

unacceptable along with all remaining work associated with the respective system will be complete and acceptable by the date scheduled for the operational test. Failure of the Contractor to have all contract work acceptably complete for this test will be cause for the Contracting Officer to bill the Contractor for the Government's additional inspection costs.

5. Outside Consultants:

   a. For each system the Contractor shall obtain the services of an experienced professional who shall certify that the operational test was conducted in accordance with the approved test plan and the results of this test meet all the contract requirements. These individuals must have a minimum of eight years experience in the testing of the particular system being tested and shall also meet qualifications (if any) set forth in other technical sections of the contract specifications.
   b. An experienced HVAC controls engineer as specified above shall be enlisted to review all controls submittals for compliance with the project documents, This person shall be available for assistance during all aspects of the controls package installation, troubleshooting, and commissioning stages. Refer to section 15950.

6. When considering the value of a system for payment purposes the following components shall be counted as part of a "system": All electo-magnetically driven equipment; pneumatic or electric control system; gages, dampers, valves, actuators, controllers, pipes, test sensing elements, logic/processors, CPU's, ducts, insulation, wiring, conduit, switchgear, and all other mechanical or electrical components, devices or equipment which are essential to the proper function of the system such as pumps, motors, air-handling units, chillers, cooling towers, etc. Software programs and any refrigerants are also considered "parts" of a system.

7. The requirements contained in this section supplement other testing requirements contained in the contract documents. If a conflict exists between the requirements of this section and other parts of the contract documents, the requirements of this section shall take precedence.

END OF SECTION

SECTION 01500

TEMPORARY CONSTRUCTION FACILITIES

1.1 GENERAL REQUIREMENTS

1.1.1 Site Plan

The Contractor shall prepare a site plan indicating the proposed location and dimensions of any area to be fenced and used by the Contractor, the number of trailers to be used, avenues of ingress/egress to the fenced area and details of the fence installation. Any areas which may have to be graveled to prevent the tracking of mud shall also be identified. The Contractor shall also indicate if the use of a supplemental or other staging area is desired.

1.1.2 Identification of Employees

The Contractor shall be responsible for furnishing to each employee, and for requiring each employee engaged on the work to display, identification as approved and directed by the Contracting Officer. Prescribed identification shall immediately be delivered to the Contracting Officer for cancellation upon release of any employee. When required, the Contractor shall obtain and provide fingerprints of persons employed on the project. Contractor and subcontractor personnel shall wear identifying markings on hard hats clearly identifying the company for whom the employee works.

1.1.3 Employee Parking

Contractor employees shall park privately owned vehicles in an area designated by the Contracting Officer. This area will be within reasonable walking distance of the construction site. Contractor employee parking shall not interfere with existing and established parking requirements of the military installation.

1.2 AVAILABILITY AND USE OF UTILITY SERVICES

1.2.1 Sanitation

The Contractor shall provide and maintain within the construction area minimum field-type sanitary facilities approved by the Contracting Officer. Government toilet facilities will not be available to Contractor's personnel.

1.2.2 Telephone

The Contractor shall make arrangements and pay all costs for telephone facilities desired.

1.3 NOT USED

1.4 PROTECTION AND MAINTENANCE OF TRAFFIC

During construction the Contractor shall provide access and temporary relocated roads as necessary to maintain traffic. The Contractor shall

maintain and protect traffic on all affected roads during the construction period except as otherwise specifically directed by the Contracting Officer. Measures for the protection and diversion of traffic, including the provision of watchmen and flagmen, erection of barricades, placing of lights around and in front of equipment and the work, and the erection and maintenance of adequate warning, danger, and direction signs, shall be as required by the State and local authorities having jurisdiction. The traveling public shall be protected from damage to person and property. The Contractor's traffic on roads selected for hauling material to and from the site shall interfere as little as possible with public traffic. The Contractor shall investigate the adequacy of existing roads and the allowable load limit on these roads. The Contractor shall be responsible for the repair of any damage to roads caused by construction operations.

1.4.1 Haul Roads

The Contractor shall, at its own expense, construct access and haul roads necessary for proper prosecution of the work under this contract. Haul roads shall be constructed with suitable grades and widths; sharp curves, blind corners, and dangerous cross traffic shall be avoided. The Contractor shall provide necessary lighting, signs, barricades, and distinctive markings for the safe movement of traffic. The method of dust control, although optional, shall be adequate to ensure safe operation at all times. Location, grade, width, and alignment of construction and hauling roads shall be subject to approval by the Contracting Officer. Lighting shall be adequate to assure full and clear visibility for full width of haul road and work areas during any night work operations. Upon completion of the work, haul roads designated by the Contracting Officer shall be removed.

1.4.2 Barricades

The Contractor shall erect and maintain temporary barricades to limit public access to hazardous areas. Such barricades shall be required whenever safe public access to paved areas such as roads, parking areas or sidewalks is prevented by construction activities or as otherwise necessary to ensure the safety of both pedestrian and vehicular traffic. Barricades shall be securely placed, clearly visible with adequate illumination to provide sufficient visual warning of the hazard during both day and night.

1.5 CONTRACTOR'S TEMPORARY FACILITIES

1.5.1 Administrative Field Offices

The Contractor shall provide and maintain administrative field office facilities within the construction area at the designated site. Government office and warehouse facilities will not be available to the Contractor's personnel.

1.5.2 Storage Area

The Contractor shall construct a temporary 1.8 m high chain link fence around trailers and materials. The fence shall include plastic strip inserts, colored [green] [brown], so that visibility through the fence is obstructed. Fence posts may be driven, in lieu of concrete bases, where soil conditions permit. Trailers, materials, or equipment shall not be placed or stored outside the fenced area unless such trailers, materials, or equipment are assigned a separate and distinct storage area by the Contracting Officer away from the vicinity of the construction site but

within the military boundaries. Trailers, equipment, or materials shall not be open to public view with the exception of those items which are in support of ongoing work on any given day. Materials shall not be stockpiled outside the fence in preparation for the next day's work. Mobile equipment, such as tractors, wheeled lifting equipment, cranes, trucks, and like equipment, shall be parked within the fenced area at the end of each work day.

1.5.3 Supplemental Storage Area

Upon Contractor's request, the Contracting Officer will designate another or supplemental area for the Contractor's use and storage of trailers, equipment, and materials. This area may not be in close proximity of the construction site but shall be within the military boundaries. Fencing of materials or equipment will not be required at this site; however, the Contractor shall be responsible for cleanliness and orderliness of the area used and for the security of any material or equipment stored in this area. Utilities will not be provided to this area by the Government.

1.5.4 Appearance of Trailers

Trailers utilized by the Contractor for administrative or material storage purposes shall present a clean and neat exterior appearance and shall be in a state of good repair. Trailers which, in the opinion of the Contracting Officer, require exterior painting or maintenance will not be allowed on the military property.

1.5.5 Maintenance of Storage Area

Fencing shall be kept in a state of good repair and proper alignment. Should the Contractor elect to traverse, with construction equipment or other vehicles, grassed or unpaved areas which are not established roadways, such areas shall be covered with a layer of gravel as necessary to prevent rutting and the tracking of mud onto paved or established roadways; gravel gradation shall be at the Contractor's discretion. Grass located within the boundaries of the construction site shall be mowed for the duration of the project. Grass and vegetation along fences, buildings, under trailers, and in areas not accessible to mowers shall be edged or trimmed neatly.

1.5.6 New Building

In the event a new building is constructed for the temporary project field office, it shall be a minimum 3.6 m in width, 5 m in length and have a minimum of 2.1 m headroom. It shall be equipped with approved electrical wiring, at least one double convenience outlet and the required switches and fuses to provide 110-120 volt power. It shall be provided with a work table with stool, desk with chair, two additional chairs, and one legal size file cabinet that can be locked. The building shall be waterproof, shall be supplied with heater, shall have a minimum of two doors, electric lights, a telephone, a battery operated smoke detector alarm, a sufficient number of adjustable windows for adequate light and ventilation, and a supply of approved drinking water. Approved sanitary facilities shall be furnished. The windows and doors shall be screened and the doors provided with dead bolt type locking devices or a padlock and heavy duty hasp bolted to the door. Door hinge pins shall be non-removable. The windows shall be arranged to open and to be securely fastened from the inside. Glass panels in windows shall be protected by bars or heavy mesh screens to prevent easy access to the building through these panels. In warm weather, air

conditioning capable of maintaining the office at 50 percent relative humidity and a room temperature 11 degrees C below the outside temperature when the outside temperature is 35 degrees C, shall be furnished. Any new building erected for a temporary field office shall be maintained by the Contractor during the life of the contract and upon completion and acceptance of the work shall become the property of the Contractor and shall be removed from the site. All charges for telephone service for the temporary field office shall be borne by the Contractor, including long distance charges up to a maximum of $75.00 per month.

1.5.7 Security Provisions

Adequate outside security lighting shall be provided at the Contractor's temporary facilities. The Contractor shall be responsible for the security of its own equipment; in addition, the Contractor shall notify the appropriate law enforcement agency requesting periodic security checks of the temporary project field office.

1.6 GOVERNMENT FIELD OFFICE

1.6.1 Resident Engineer's Office

The Contractor shall provide the Government Resident Engineer with an office, approximately 19 square meters in floor area, located where directed and providing space heat, electric light and power, and toilet facilities consisting of one lavatory and one water closet complete with connections to water and sewer mains. A mail slot in the door or a lockable mail box mounted on the surface of the door shall be provided. At completion of the project, the office shall remain the property of the Contractor and shall be removed from the site. Utilities shall be connected and disconnected in accordance with local codes and to the satisfaction of the Contracting Officer.

1.6.2 Trailer-Type Mobile Office

The Contractor may, at its option, furnish and maintain a trailer-type mobile office acceptable to the Contracting Officer and providing as a minimum the facilities specified above. The trailer shall be securely anchored to the ground at all four corners to guard against movement during high winds.

1.7 PLANT COMMUNICATION

Whenever the Contractor has the individual elements of its plant so located that operation by normal voice between these elements is not satisfactory, the Contractor shall install a satisfactory means of communication, such as telephone or other suitable devices. The devices shall be made available for use by Government personnel.

1.8 TEMPORARY PROJECT SAFETY FENCING

As soon as practicable, but not later than 15 days after the date established for commencement of work, the Contractor shall furnish and erect temporary project safety fencing at the work site. The safety fencing shall be a high visibility orange colored, high density polyethylene grid or approved equal, a minimum of 1.1 m high, supported and tightly secured to steel posts located on maximum 3 m centers, constructed at the approved location. The safety fencing shall be maintained by the Contractor during the life of the contract and, upon completion and

acceptance of the work, shall become the property of the Contractor and shall be removed from the work site.

1.9 CLEANUP

Construction debris, waste materials, packaging material and the like shall be removed from the work site daily. Any dirt or mud which is tracked onto paved or surfaced roadways shall be cleaned away. Materials resulting from demolition activities which are salvageable shall be stored within the fenced area described above or at the supplemental storage area. Stored material not in trailers, whether new or salvaged, shall be neatly stacked when stored.

1.10 RESTORATION OF STORAGE AREA

Upon completion of the project and after removal of trailers, materials, and equipment from within the fenced area, the fence shall be removed and will become the property of the Contractor. Areas used by the Contractor for the storage of equipment or material, or other use, shall be restored to the original or better condition. Gravel used to traverse grassed areas shall be removed and the area restored to its original condition, including top soil and seeding as necessary.

-- End of Section --

SECTION 02050

DEMOLITION

PART 1 GENERAL

1.1 REFERENCES

The publications listed below form a part of this specification to the extent referenced. The publications are referred to in the text by basic designation only.

ENGINEERING MANUALS (EM)

EM 385-1-1	(1996) U.S. Army Corps of Engineers Safety and Health Requirements Manual

1.2 GENERAL REQUIREMENTS

The work includes demolition, salvage of identified items and materials, and removal of resulting rubbish and debris. Rubbish and debris shall be removed from Government property daily, unless otherwise directed, to avoid accumulation at the demolition site. Materials that cannot be removed daily shall be stored in areas specified by the Contracting Officer. In the interest of occupational safety and health, the work shall be performed in accordance with EM 385-1-1, Section 23, Demolition; Section 5, Personal Protective and Safety Equipment; and other applicable Sections. In the interest of conservation, salvage shall be pursued to the maximum extent possible; salvaged items and materials shall be disposed of as specified.

1.3 SUBMITTALS

Government approval is required for submittals with a "GA" designation; submittals having an "FIO" designation are for information only. The following shall be submitted in accordance with Section 01330 SUBMITTAL PROCEDURES:

SD-08 Statements

Work Plan; GA.

The procedures proposed for the accomplishment of the work. The procedures shall provide for safe conduct of the work, including procedures and methods to provide necessary supports, lateral bracing and shoring when required, careful removal and disposition of materials specified to be salvaged, protection of property which is to remain undisturbed, coordination with other work in progress, and timely disconnection of utility services. The procedures shall include a detailed description of the methods and equipment to be used for each operation, and the sequence of operations in accordance with EM 385-1-1. The plan shall also provide a detailed listing of items demolished and recycled including descriptions, quantities, receipts, manifests, and other such pertinent information. The plan shall be submitted to the Niagara Falls Air Reserve Station Environmental Office (CEV).

1.4 DUST CONTROL

The amount of dust resulting from demolition shall be controlled to prevent the spread of dust to occupied portions of the construction site and to avoid creation of a nuisance in the surrounding area. Use of water will not be permitted when it will result in, or create, hazardous or objectionable conditions such as ice, flooding and pollution.

1.5 PROTECTION

1.5.1 Protection of Personnel

During the demolition work the Contractor shall continuously evaluate the condition of the structure being demolished and take immediate action to protect all personnel working in and around the demolition site. No area, section, or component of floors, roofs, walls, columns, pilasters, or other structural element will be allowed to be left standing without sufficient bracing, shoring, or lateral support to prevent collapse or failure while workmen remove debris or perform other work in the immediate area.

Floors, roofs, walls, columns, pilasters, and other structural components that are designed and constructed to stand without lateral support or shoring, and are determined to be in stable condition, may be allowed to remain standing without additional bracing, shoring, of lateral support until demolished. The Contractor shall ensure that no elements determined to be unstable are left unsupported and shall be responsible for placing and securing bracing, shoring, or lateral supports as may be required as a result of any cutting, removal, or demolition work performed under this contract.

1.5.2 Protection of Existing Property

Before beginning any demolition work, the Contractor shall survey the site and examine the drawings and specifications to determine the extent of the work. The Contractor shall take necessary precautions to avoid damage to existing items to remain in place, to be reused, or to remain the property of the Government; any damaged items shall be repaired or replaced as approved by the Contracting Officer. The Contractor shall coordinate the work of this section with all other work and shall construct and maintain shoring, bracing, and supports as required. The Contractor shall ensure that structural elements are not overloaded and shall be responsible for increasing structural supports or adding new supports as may be required as a result of any cutting, removal, or demolition work performed under this contract.

1.5.3 Protection From the Weather

The interior of buildings to remain and salvageable materials and equipment shall be protected from the weather at all times.

1.5.4 Protection of Trees

Trees within the project site which might be damaged during demolition and which are indicated to be left in place shall be protected by a 1.83 m high fence. The fence shall be securely erected a minimum of 1.5 m from the trunk of individual trees or follow the outer perimeter of branches or clumps of trees. Any tree designated to remain that is damaged during the work under this contract shall be replaced in kind or as approved by the Contracting Officer.

1.5.5 Environmental Protection

The work shall comply with the requirements of Section 01410.

1.6 BURNING

The use of burning at the project site for the disposal of refuse and debris will not be permitted.

1.7 USE OF EXPLOSIVES

Use of explosives will not be permitted.

1.8 AVAILABILITY OF WORK AREAS

Areas in which the work is to be accomplished will be available in accordance with the following schedule:

Area	Date
Project Construction Limits	Project Contract Period

PART 2 PRODUCTS (Not Applicable)

PART 3 EXECUTION

3.1 EXISTING STRUCTURES

Existing structures indicated shall be removed as indicated on drawings.

3.2 UTILITIES

Existing utilities shall be removed or abandoned in place as indicated. When utility lines are encountered that are not indicated on the drawings, the Contracting Officer shall be notified prior to further work in that area.

3.3 FILLING

Holes, open basements and other hazardous openings shall be filled in accordance with Section 02221 EXCAVATION, FILLING AND BACKFILLING FOR BUILDINGS.

3.4 DISPOSITION OF MATERIAL

Title to material and equipment to be demolished, except Government salvage and historical items, is vested in the Contractor upon receipt of notice to proceed. The Government will not be responsible for the condition, loss or damage to such property after notice to proceed.

3.4.1 Salvageable Items and Material

Contractor shall salvage items and material to the maximum extent possible.

3.4.1.1 Material Salvaged for the Contractor

Material salvaged for the Contractor shall be stored as approved by the Contracting Officer and shall be removed from Government property before

completion of the contract. Material salvaged for the Contractor shall not be sold on the site.

3.4.1.2 Material Salvaged by the Contractor for Removal, Relocation, and Installation at New Facility

The following items shall be removed from Building 706 and relocated and installed at the new facility.

a. 2.4 m wide x 3.8 m high x 75 mm thick steel door with 8 mm lead lining, tracks, motor and associated controls.

b. Load bank bulkhead fitting.

3.4.2 Unsalvageable Material

Concrete, masonry, and other noncombustible material, shall be disposed of by the Contractor off Government property. Combustible material shall be disposed of in a sanitary fill area located off government property. Contractor's choice of disposal areas is subject to the Contracting Officer's prior approval. Contractor is responsible for obtaining all necessary written approvals in full compliance with all applicable local, state, and federal requirements.

3.5 CLEAN UP

Debris and rubbish shall be removed from basement and similar excavations. Debris shall be removed and transported in a manner that prevents spillage on streets or adjacent areas. Local regulations regarding hauling and disposal shall apply.

-- End of Section --

SECTION 02080

ASBESTOS ABATEMENT

PART 1 GENERAL

1.1 REFERENCES

The publications listed below form a part of this specification to the extent referenced. The publications are referred to in the text by basic designation only.

AMERICAN NATIONAL STANDARDS INSTITUTE (ANSI)

ANSI Z9.2	(1979; R 1991) Fundamentals Governing the Design and Operation of Local Exhaust Systems

AMERICAN SOCIETY FOR TESTING AND MATERIALS (ASTM)

ASTM C 732	(1995) Aging Effects of Artificial Weathering on Latex Sealants
ASTM D 522	(1993a) Mandrel Bend Test of Attached Organic Coatings
ASTM D 1331	(1989; R 1995) Surface and Interfacial Tension of Solutions of Surface-Active Agents
ASTM D 2794	(1993) Resistance of Organic Coatings to the Effects of Rapid Deformation (Impact)
ASTM D 4397	(1991) Polyethylene Sheeting for Construction, Industrial, and Agricultural Applications
ASTM E 84	(1995a) Surface Burning Characteristics of Building Materials
ASTM E 96	(1995) Water Vapor Transmission of Materials
ASTM E 119	(1995a) Fire Tests of Building Construction and Materials
ASTM E 736	(1992) Cohesion/Adhesion of Sprayed Fire-Resistive Materials Applied to Structural Members

CODE OF FEDERAL REGULATIONS (CFR)

29 CFR 1910	Occupational Safety and Health Standards
29 CFR 1926	Safety and Health Regulations for Construction

40 CFR 61	National Emissions Standards for Hazardous Air Pollutants
40 CFR 763	Asbestos
40 CFR 241	Guidelines for the Land Disposal of Solid Waste
49 CFR 107	Hazardous Materials Program Procedures
49 CFR 171	General Information, Regulations and Definitions
49 CFR 172	Hazardous Materials Table, Special Provisions, Hazardous Materials Communications, Emergency Response Information, and Training Requirements
49 CFR 173	Shippers - General Requirements for Shipments and Packagings

ENVIRONMENTAL PROTECTION AGENCY (EPA)

EPA 340/1-90-018	(1990) Asbestos/NESHAP Regulated Asbestos Containing Materials Guidance
EPA 340/1-90-019	(1990) Asbestos/NESHAP Adequately Wet Guidance

NATIONAL FIRE PROTECTION ASSOCIATION (NFPA)

NFPA 701	(1996) Methods of Fire Test for Flame-Resistant Textiles and Films

STATE OF NEW YORK CODES, RULES AND REGULATIONS

12 NYCRR Part 56	(1994) Part 56 of Title 12 of the Official Compilation of Codes, Rules, and Regulations and All Applicable Variances

UNITED STATES ARMY CORPS OF ENGINEERS (USACE)

EM 385-1-1	(1996) Safety and Health Requirements Manual

1.2 DEFINITIONS

Adequately Wet: A term defined in 40 CFR 61, Subpart M, and EPA 340/1-90-019 meaning to sufficiently mix or penetrate with liquid to prevent the release of particulate. If visible emissions are observed coming from asbestos-containing material (ACM), then that material has not been adequately wetted. However, the absence of visible emissions is not sufficient evidence of being adequately wetted.

Aggressive Method: Removal or disturbance of building material by sanding, abrading, grinding, or other method that breaks, crumbles, or disintegrates intact asbestos-containing material (ACM).

Amended Water: Water containing a wetting agent or surfactant with a surface tension of at least 29 dynes per square centimeter when tested in

accordance with ASTM D 1331.

Asbestos: Asbestos includes chrysotile, amosite, crocidolite, tremolite asbestos, anthophylite asbestos, actinolite asbestos, and any of these minerals that have been chemically treated and/or altered.

Asbestos-Containing Material (ACM): Any materials containing more than one percent asbestos.

Asbestos Fiber: A particulate form of asbestos, 5 micrometers or longer, with a length-to-width ratio of at least 3 to 1.

Authorized Person: Any person authorized by the Contractor and required by work duties to be present in the regulated areas.

Building Inspector: Individual who inspects buildings for asbestos and has EPA Model Accreditation Plan (MAP) "Building Inspector" training; accreditation required by 40 CFR 763 Subpart E, Appendix C.

Certified Industrial Hygienist (CIH): An Industrial Hygienist certified in the practice of industrial hygiene by the American Board of Industrial Hygiene.

Class I Asbestos Work: Activities defined by OSHA involving the removal of thermal system insulation (TSI) and surfacing ACM.

Class II Asbestos Work: Activities defined by OSHA involving the removal of ACM which is not thermal system insulation or surfacing material. This includes, but is not limited to, the removal of asbestos- containing wallboard, floor tile and sheeting, roofing and siding shingles, and construction mastic. Certain "incidental" roofing materials such as mastic, flashing and cements when they are still intact are excluded from Class II asbestos work. Removal of small amounts of these materials which would fit into a glovebag may be classified as a Class III job.

Class III Asbestos Work: Activities defined by OSHA that involve repair and maintenance operations, where ACM, including TSI and surfacing ACM, is likely to be disturbed. Operations may include drilling, abrading, cutting a hole, cable pulling, crawling through tunnels or attics and spaces above the ceiling, where asbestos is actively disturbed or asbestos-containing debris is actively disturbed.

Class IV Asbestos Work: Maintenance and custodial construction activities during which employees contact but do not disturb ACM and activities to clean-up dust, waste and debris resulting from Class I, II, and III activities. This may include dusting surfaces where ACM waste and debris and accompanying dust exists and cleaning up loose ACM debris from TSI or surfacing ACM following construction.

Clean room: An uncontaminated room having facilities for the storage of employees' street clothing and uncontaminated materials and equipment.

Competent Person: In addition to the definition in 29 CFR 1926 Section .32(f), a person who is capable of identifying existing asbestos hazards as defined in 29 CFR 1926 Section .1101, selecting the appropriate control strategy, has the authority to take prompt corrective measures to eliminate them and has EPA Model Accreditation Plan (MAP) "Contractor/Supervisor" training; accreditation required by 40 CFR 763 Subpart E, Appendix C.

Contractor/Supervisor: Individual who supervises asbestos abatement work and has EPA Model Accreditation Plan "Contractor/Supervisor" training; accreditation required by 40 CFR 763, Subpart E, Appendix C.

Critical Barrier: One or more layers of plastic sealed over all openings into a regulated area or any other similarly placed physical barrier sufficient to prevent airborne asbestos in a regulated area from migrating to an adjacent area.

Decontamination Area: An enclosed area adjacent and connected to the regulated area and consisting of an equipment room, shower area, and clean room, which is used for the decontamination of workers, materials, and equipment that are contaminated with asbestos.

Demolition: The wrecking or taking out of any load-supporting structural member and any related razing, removing, or stripping of asbestos products.

Disposal Bag: A 6 mil minimum thick, leak-tight plastic bag, pre-labeled in accordance with 29 CFR 1926 Section .1101, used for transporting asbestos waste from containment to disposal site.

Disturbance: Activities that disrupt the matrix of ACM, crumble or pulverize ACM, or generate visible debris from ACM. Disturbance includes cutting away small amounts of ACM, no greater than the amount which can be contained in one standard sized glovebag or waste bag in order to access a building component. In no event shall the amount of ACM so disturbed exceed that which can be contained in one glovebag or waste disposal bag which shall not exceed 1.5 m in length and width.

Equipment Room or Area: An area adjacent to the regulated area used for the decontamination of employees and their equipment.

Employee Exposure: That exposure to airborne asbestos that would occur if the employee were not using respiratory protective equipment.

Fiber: A fibrous particulate, 5 micrometers or longer, with a length to width ratio of at least 3 to 1.

Friable ACM: A term defined in 40 CFR 61 Subpart M and EPA 340/1-90-018 meaning any material which contains more than 1 percent asbestos, as determined using the method specified in 40 CFR 763 Subpart F, Appendix A, Section 1, Polarized Light Microscopy (PLM), that when dry, can be crumbled, pulverized, or reduced to powder by hand pressure. If the asbestos content is less than 10 percent, as determined by a method other than point counting by PLM, the asbestos content shall be verified by point counting using PLM.

Glovebag: Not more than a 1.5 by 1.5 m, 6 mil. minimum thick impervious plastic bag-like enclosure affixed around an asbestos-containing material, with glove-like appendages through which material and tools may be handled.

High-Efficiency Particulate Air (HEPA) Filter: A filter capable of trapping and retaining at least 99.97 percent of all mono-dispersed particles of 0.3 micrometers in diameter.

Homogeneous Area: An area of surfacing material or thermal system insulation that is uniform in color and texture, and date of application.

Industrial Hygienist: A professional qualified by education, training, and

experience to anticipate, recognize, evaluate, and develop controls for occupational health hazards.

Intact: ACM which has not crumbled, been pulverized, or otherwise deteriorated so that the asbestos is no longer likely to be bound with its matrix. Removal of "intact" asphaltic, resinous, cementitious products does not render the ACM non-intact simply by being separated into smaller pieces.

Model Accreditation Plan (MAP): USEPA training accreditation requirements for persons who work with asbestos as specified in 40 CFR 763 Subpart E, Appendix C.

Modification: A changed or altered procedure, material or component of a control system, which replaces a procedure, material or component of a required system.

Negative Exposure Assessment: A demonstration by the Contractor to show that employee exposure during an operation is expected to be consistently below the OSHA Permissible Exposure Limits (PELs).

NESHAP: National Emission Standards for Hazardous Air Pollutants. The USEPA NESHAP regulation for asbestos is at 40 CFR 61 Subpart M.

Nonfriable ACM: A NESHAP term defined in 40 CFR 61 Subpart M and EPA 340/1-90-018 meaning any material containing more than 1 percent asbestos, as determined using the method specified in 40 CFR 763 Subpart F, Appendix A, Section 1, Polarized Light Microscopy, that, when dry, cannot be crumbled, pulverized or reduced to powder by hand pressure.

Nonfriable ACM (Category I): A NESHAP term defined in 40 CFR 61 Subpart M and EPA 340/1-90-018 meaning asbestos-containing packings, gaskets, resilient floor covering, and asphalt roofing products containing more than 1 percent asbestos as determined using the method specified in 40 CFR 763 Subpart F, Appendix A, Section 1, Polarized Light Microscopy.

Nonfriable ACM (Category II): A NESHAP term defined in 40 CFR 61 Subpart M and EPA 340/1-90-018 meaning any material, excluding Category I nonfriable ACM, containing more than 1 percent asbestos, as determined using the methods specified in 40 CFR 763 Subpart F, Appendix A, Section 1, Polarized Light Microscopy, that when dry, cannot be crumbled, pulverized, or reduced to powder by hand pressure.

Permissible Exposure Limits (PELs):

a. PEL-Time weighted average(TWA): Concentration of asbestos not in excess of 0.1 fibers per cubic centimeter of air (f/cc) as an eight hour time weighted average (TWA), as determined by the method prescribed in 29 CFR 1926 Section .1101, Appendix A, or the current version of NIOSH analytical method 7400.

b. PEL-Excursion Limit: An airborne concentration of asbestos not in excess of 1.0 f/cc of air as averaged over a sampling period of 30 minutes as determined by the method prescribed in 29 CFR 1926 Section .1101, Appendix A, or the current version of NIOSH analytical method 7400.

Regulated Area: An OSHA term defined in 29 CFR 1926 Section .1101 meaning an area established by the Contractor to demarcate areas where Class I, II, and III asbestos work is conducted; also any adjoining area where debris

and waste from such asbestos work accumulate; and an area within which airborne concentrations of asbestos exceed, or there is a reasonable possibility they may exceed, the permissible exposure limit.

Removal: All operations where ACM is taken out or stripped from structures or substrates, and includes demolition operations.

Repair: Overhauling, rebuilding, reconstructing, or reconditioning of structures or substrates, including encapsulation or other repair of ACM attached to structures or substrates. (If the amount of asbestos so "disturbed" cannot be contained in one standard glovebag or waste bag, Class I precautions are required).

Spills/Emergency Cleanups: Cleanup of sizable amounts of asbestos waste and debris which has occurred, for example, when water damage occurs in a building, and sizable amounts of ACM are dislodged. A Competent Person evaluates the site and ACM to be handled, and based on the type, condition and extent of the dislodged material, classifies the cleanup as Class I, II, or III. Only if the material was intact and the cleanup involves mere contact of ACM, rather than disturbance, could there be a Class IV classification.

Surfacing ACM: Asbestos-containing material which contains more than 1% asbestos and is sprayed-on, troweled-on, or otherwise applied to surfaces, such as acoustical plaster on ceilings and fireproofing materials on structural members, or other materials on surfaces for acoustical, fireproofing, or other purposes.

Thermal system insulation (TSI) ACM: ACM which contains more than 1% asbestos and is applied to pipes, fittings, boilers, breeching, tanks, ducts, or other interior structural components to prevent heat loss or gain or water condensation.

Transite: A generic name for asbestos cement wallboard and pipe.

Worker: Individual (not designated as the Competent Person or a supervisor) who performs asbestos work and has completed asbestos worker training required by 29 CFR 1926 Section .1101 to include EPA Model Accreditation Plan (MAP) "Worker" training; accreditation required by 40 CFR 763 Subpart E, Appendix C, if required by the OSHA Class of work to be performed or by the state where the work is to be performed.

1.3 DESCRIPTION OF WORK

All work conducted in conjunction with the asbestos abatement activities shall be in strict accordance with all applicable federal and state standards and codes governing asbestos abatement, as applicable. In particular, all work shall be in strict accordance with Part 56 of Title 12 of the Official Compliation of Codes, Rules, and Regulations of the State of New York (cited as 12 NYCRR Part 56) and all applicable variances to 12 NYCRR Part 56.

The work covered by this section includes the removal of asbestos-containing materials (ACM) which are encountered during demolition activities associated with this project and describes procedures and equipment required to protect workers and occupants of the regulated area from contact with airborne asbestos fibers and ACM dust and debris. Government furnished ACM Survey for Building 706 is included at the end of this Section. Activities include OSHA Class I, Class II, and Class IV work

operations involving ACM. The work also includes containment, storage, transportation and disposal of the generated ACM wastes. More specific operational procedures shall be detailed in the required Accident Prevention Plan and its subcomponents, the Asbestos Hazard Abatement Plan and Activity Hazard Analyses required in paragraph SAFETY AND HEALTH PROGRAM.

1.3.1 Abatement Work Tasks

The specific ACM to be abated is identified on the detailed ACM Surveys included at the end of this section.

1.3.2 Unexpected Discovery of Asbestos

For any previously untested building components suspected to contain asbestos and located in areas impacted by the work, the Contractor shall notify the Contracting Officer (CO) who will have the option of ordering up to 10 bulk samples to be obtained at the Contractor's expense and delivered to a laboratory accredited under the National Institute of Standards and Technology (NIST) "National Voluntary Laboratory Accreditation Program (NVLAP)" and analyzed by Polarized Light Microscopy (PLM) and Transmission Electron Microscopy (TEM) at no additional cost to the Government. Any additional components identified as ACM that have been approved by the Contracting Officer for removal shall be removed by the Contractor and will be paid for by an equitable adjustment to the contract price under the CONTRACT CLAUSE titled "changes". Sampling activities undertaken to determine the presence of additional ACM shall be conducted by personnel who have successfully completed the EPA Model Accreditation Plan (MAP) "Building Inspector" training course required by 40 CFR 763 Subpart E, Appendix C.

1.4 SUBMITTALS

Government approval is required for submittals with a "GA" designation; submittals having an "FIO" designation are for information only. The following shall be submitted in accordance with Section 01330 SUBMITTAL PROCEDURES:

SD-01 Data

Materials and Equipment; FIO.

Manufacturer's catalog data for all materials and equipment to be used in the work, including brand name, model, capacity, performance characteristics and any other pertinent information. Test results and certificates from the manufacturer of encapsulants substantiating compliance with performance requirements of this specification. Material Safety Data Sheets for all chemicals to be used onsite in the same format as implemented in the Contractor's HAZARD COMMUNICATION PROGRAM. Data shall include, but shall not be limited to, the following items:

a. High Efficiency Filtered Air (HEPA) local exhaust equipment

b. Vacuum cleaning equipment

c. Pressure differential monitor for HEPA local exhaust equipment

d. Air monitoring equipment

e. Respirators

f. Personal protective clothing and equipment
(1) Coveralls
(2) Underclothing
(3) Other work clothing
(4) Foot coverings
(5) Hard hats
(6) Eye protection
(7) Other items required and approved by Contractors Designated IH and Competent Person

g. Glovebag

h. Duct Tape

i. Disposal Containers
(1) Disposal bags
(2) Fiberboard drums
(3) Paperboard boxes

j. Sheet Plastic
(1) Polyethylene Sheet - General
(2) Polyethylene Sheet - Flame Resistant
(3) Polyethylene Sheet - Reinforced

k. Wetting Agent
(1) Amended Water
(2) Removal encapsulant

l. Strippable Coating

m. Prefabricated Decontamination Unit(s)

n. Other items

o. Chemical encapsulant

p. Chemical encasement materials

q. Material Safety Data Sheets (for all chemicals proposed)

SD-04 Drawings

Site Layout; GA.

Descriptions, detail project drawings, and site layout to include worksite containment area techniques, local exhaust ventilation system locations, decontamination and load-out units, other temporary waste storage facility, location of temporary utilities (electrical, water, sewer) and boundaries of each regulated area.

SD-08 Statements

Qualifications; GA.

A written report providing evidence of qualifications for personnel, facilities, equipment, independent testing firm and accredited laboratory assigned to the work.

Training Program; FIO.

A copy of the written project site-specific training material as indicated in 29 CFR 1926 Section .1101 that will be used to train onsite employees. This training document shall be signed by the Contractor's Designated IH and Competent Person.

Medical Requirements; FIO.

Physician written result.

Encapsulants; GA.

Certificates stating that encapsulants meet the applicable specified performance requirements.

Accident Prevention Plan; FIO

Asbestos Hazard Abatement Plan; FIO

Activity Hazard Analyses; FIO

SD-09 Reports

Exposure Assessment and Air Monitoring; GA.

Initial exposure assessments, negative exposure assessments, air-monitoring results and documentation.

Local Exhaust Ventilation; FIO.

Pressure differential recordings.

Insurance; GA.

Abatement Contractor shall submit proof of current general insurance to perform work, in addition to submitting asbestos-specific insurance in the amount of $1,000,000 on an occurrence basis, without any sunset clauses. All insurance supplied will be from companies with an Office in New York State and an A+ Best Rating.

Licenses, Permits and Notifications; GA.

Licenses, permits and notifications. The Abatement Contractor shall submit proof of a current and valid New York State Asbestos-Abatement Contractor's License, registration as a contractor approved for asbestos-related work. Patent infringement; it is emphasized that the Negative Air Pressure System Utilizing HEPA Filtration has been patented, which is covered by US Patent No. 4,604,111 issued on August 5, 1986 and reaffirmed by the United States Patent and Trademark Office before the Board of Patent Appeals and Interferences on March 31, 1989 requiring license for use of such system.

SD-13 Certificates

Vacuum, Filtration and Ventilation Equipment; FIO.

Manufacturer's certifications showing compliance with ANSI Z9.2 for:

a. Vacuums.
b. Water filtration equipment.
c. Ventilation equipment.
d. Other equipment required to contain airborne asbestos fibers.

SD-18 Records

Respiratory Protection Program; GA.

Records of the respirator program and current respirator fit testing and training records for all project workers that meet requirements of OSHA.

Cleanup and Disposal; GA.

Waste shipment records. Weigh bills and delivery tickets shall be furnished for information only. Bills of lading for waste shipments must be signed by a member of 914 AW/CEV prior to shipping off base.

1.5 QUALIFICATIONS

1.5.1 Written Qualifications and Organization Report

The Contractor shall furnish a written qualifications and organization report providing evidence of qualifications of the Contractor, Contractor's Project Supervisor, Designated Competent Person, supervisors and workers; Designated IH (person assigned to project and firm name); independent testing laboratory (including name of firm, principal and analyst(s) who will perform analyses); all subcontractors to be used including disposal transportation and disposal facility firms, subcontractor supervisors, subcontractor workers; and any others assigned to perform asbestos abatement and support activities. The report shall include an organization chart showing the Contractor's staff organization for this project by name and title, chain of command and reporting relationship with all subcontractors. The report shall be signed by the Contractor, the Contractor's onsite project manager, Designated Competent Person, Designated IH, designated testing laboratory and the principals of all subcontractors to be used. The Contractor shall include the following statement in the report: "By signing this report I certify that the personnel I am responsible for during the course of this project fully understand the contents of 29 CFR 1926 Section .1101, 40 CFR 61 Subpart M, and the federal, state and local requirements specified in paragraph SAFETY AND HEALTH COMPLIANCE for those asbestos abatement activities that they will be involved in."

1.5.2 Specific Requirements

The Contractor shall designate in writing, personnel meeting the following qualifications:

a. Designated Competent Person: The name, address, telephone number, and resume of the Contractor's Designated Competent Person shall be provided. Evidence that the full-time Designated Competent Person is qualified in accordance with 29 CFR 1926 Sections .32 and .1101, has EPA Model Accreditation Plan (MAP) "Contractor/Supervisor" training accreditation required by 40 CFR 763 Subpart E, Appendix C, and is experienced in the administration and supervision of asbestos abatement projects, including exposure assessment and monitoring, work practices, abatement methods, protective measures for personnel, setting up and inspecting asbestos abatement work

areas, evaluating the integrity of containment barriers, placement and operation of local exhaust systems, ACM generated waste containment and disposal procedures, decontamination units installation and maintenance requirements, site safety and health requirements, notification of other employees onsite, etc. The duties of the Competent Person shall include the following: controlling entry to and exit from the regulated area; supervising any employee exposure monitoring required by 29 CFR 1926 Section .1101; ensuring that all employees working within a regulated area wear the appropriate personal protective equipment (PPE), are trained in the use of appropriate methods of exposure control, and use the hygiene facilities and decontamination procedures specified; and ensuring that engineering controls in use are in proper operating conditions and are functioning properly. This Designated Competent Person shall be responsible for compliance with applicable federal, state and local requirements, the Contractor's Accident Prevention Plan and Asbestos Hazard Abatement Plan. The Designated Competent Person shall provide, and the Contractor shall submit, the "Contractor/Supervisor" course completion certificate and the most recent certificate for required refresher training with the employee "Certificate of Worker Acknowledgment" required by this paragraph. The Contractor shall submit evidence that this person has a minimum of 2 years of on-the-job asbestos abatement experience relevant to OSHA competent person requirements. The Designated Competent Person shall be onsite at all times during the conduct of this project.

b. Project and Other Supervisors: The Contractor shall provide the name, address, telephone number, and resume of the Project Supervisor and other supervisors who have responsibility to implement the Accident Prevention Plan, including the Asbestos Hazard Abatement Plan and Activity Hazard Analyses, the authority to direct work performed under this contract and verify compliance and have EPA Model Accreditation Plan (MAP) "Contractor/Supervisor" training accreditation required by 40 CFR 763 Subpart E, Appendix C. The Project Supervisor and other supervisors shall provide, and the Contractor shall submit, the "Contractor/Supervisor" course completion certificate and the most recent certificate for required refresher training with the employee "Certificate of Worker Acknowledgment" required by this paragraph. The Contractor shall submit evidence that the Project Supervisor has a minimum of 2 years of on-the-job asbestos abatement experience relevant to project supervisor responsibilities and the other supervisors have a minimum of 1 year on-the-job asbestos abatement experience commensurate with the responsibilities they will have on this project.

c. Designated Industrial Hygienist: The Contractor shall provide the name, address, telephone number, resume and other information specified below for the Industrial Hygienist (IH) selected to prepare the Contractor's Asbestos Hazard Abatement Plan, prepare and perform training, direct air monitoring and assist the Contractor's Competent Person in implementing and ensuring that safety and health requirements are complied with during the performance of all required work. The Designated IH shall be a person who is board certified in the practice of industrial hygiene or board eligible (meets all education and experience requirements) as determined and documented by the American Board of Industrial Hygiene (ABIH), has EPA Model Accreditation Plan (MAP)

"Contractor/Supervisor" training accreditation required by 40 CFR 763 Subpart E, Appendix C and has a minimum of 2 years of comprehensive experience in planning and overseeing asbestos abatement activities. The Designated IH shall provide, and the Contractor shall submit, the "Contractor/Supervisor" course completion certificate and the most recent certificate for required refresher training with the employee "Certificate of Worker Acknowledgment" required by this paragraph. The Designated IH shall be completely independent from the Contractor according to federal, state, or local regulations; that is, shall not be a Contractor's employee or be an employee or principal of a firm in a business relationship with the Contractor negating such independent status. A copy of the Designated IH's current valid ABIH certification shall be included. The Designated IH shall be onsite, visit the site at least once per week for the duration of asbestos activities and be available for emergencies. In addition, the Designated IH shall prepare, and the Contractor shall submit, the name, address, telephone numbers and resumes of additional IH's and industrial hygiene technicians (IHT) who will be assisting the Designated IH in performing onsite tasks. IHs and IHTs supporting the Designated IH shall have a minimum of 2 full years of practical onsite asbestos abatement experience. The formal reporting relationship between the Designated IH and the support IHs and IHTs, the Designated Competent Person, and the Contractor shall be indicated.

d. Asbestos Abatement Workers: Asbestos abatement workers shall meet the requirements contained in 29 CFR 1926 Section .1101, 40 CFR 61 Subpart M and other applicable federal, state and local requirements. Worker training documentation shall be provided as required on the "Certificate of Workers Acknowledgment" in this paragraph.

e. Worker Training and Certification of Worker Acknowledgment: Training documentation shall be required for each employee who will perform OSHA Class I, Class II, Class III, or Class IV asbestos abatement operations. Such documentation shall be submitted on a Contractor generated form titled "Certificate of Workers Acknowledgment" to be completed for each employee in the same format and containing the same information as the example certificate at the end of this section. All training course completion certificates (initial and most recent update refresher) required by the information checked on the form shall be attached.

f. Independent Testing Laboratory: The Contractor shall provide the name, address and telephone number of the independent testing laboratory selected to perform the sample analyses and report the results. The testing laboratory shall be completely independent from the Contractor as recognized by federal, state or local regulations.

g. Disposal Facility, Transporter: The Contractor shall provide written evidence that the landfill to be used is approved for asbestos disposal by the USEPA and state and local regulatory agencies. Copies of signed agreements between the Contractor (including subcontractors and transporters) and the asbestos waste disposal facility to accept and dispose of all asbestos containing waste generated during the performance of this contract shall be provided. Qualifications shall be provided for each subcontractor

or transporter to be used, indicating previous experience in transport and disposal of asbestos waste to include all required state and local waste hauler requirements for asbestos. The Contractor and transporters shall meet the DOT requirements of 49 CFR 171, 49 CFR 172, and 49 CFR 173 as well as registration requirements of 49 CFR 107 and other applicable state or local requirements. The disposal facility shall meet the requirements of 40 CFR 61 Sections .154 or .155 as required in 40 CFR 61 Section .150(b) and other applicable state or local requirements.

1.5.3 Federal, State or Local Citations on Previous Projects

The Contractor and all subcontractors shall submit a statement, signed by an officer of the company, containing a record of any citations issued by Federal, State or local regulatory agencies relating to asbestos activities (including projects, dates, and resolutions); a list of penalties incurred through non-compliance with asbestos project specifications including liquidated damages, overruns in scheduled time limitations and resolutions; and situations in which an asbestos-related contract has been terminated (including projects, dates, and reasons for terminations). If there are none, there will be a negative declaration signed by an officer of the company.

1.6 REGULATORY REQUIREMENTS

In addition to detailed requirements of this specification, work performed under this contract shall comply with EM 385-1-1, applicable federal, state, and local laws, ordinances, criteria, rules and regulations regarding handling, storing, transporting, and disposing of asbestos waste materials. This includes, but is not limited to, OSHA standards, 29 CFR 1926, especially Section .1101, 40 CFR 61 Subpart M. Matters of interpretation of standards shall be submitted to the appropriate administrative agency for resolution before starting work. Where the requirements of this specification, applicable laws, criteria, ordinances, regulations, and referenced documents vary, the most stringent requirements shall apply. The following state and local laws, rules and regulations regarding demolition, removal, encapsulation, construction alteration, repair, maintenance, renovation, spill/emergency cleanup, housekeeping, handling, storing, transporting and disposing of asbestos material apply: and 12 NYCRR Part 56.

1.7 SAFETY AND HEALTH PROGRAM AND PLANS

The Contractor's Designated IH shall develop and submit a written comprehensive site-specific Accident Prevention Plan at least 30 days prior to the preconstruction conference. The Accident Prevention Plan shall address all requirements of EM 385-1-1, Appendix A, covering onsite work to be performed by the Contractor and all subcontractors. The Accident Prevention Plan shall incorporate an Asbestos Hazard Abatement Plan, and Activity Hazard Analyses as separate appendices into one site specific Accident Prevention Plan document. Any portions of the Contractor's overall Safety and Health Program that are referenced in the Accident Prevention Plan, e.g., respirator program, hazard communication program, confined space entry program, etc., shall be included as appendices to the Accident Prevention Plan. The plan shall take into consideration all the individual asbestos abatement work tasks identified in Table 1. The plan shall be prepared, signed and sealed including certification number and dated by the Contractor's Designated IH, Competent Person, and Project Supervisor.

1.7.1 The Asbestos Hazard Abatement Plan Appendix

The Asbestos Hazard Abatement Plan appendix to the Accident Prevention Plan shall include, but not be limited to, the following:

a. The personal protective equipment to be used;

b. The location and description of regulated areas including clean and dirty areas, access tunnels, and decontamination unit (clean room, shower room, equipment room, storage areas such as load-out unit);

c. Initial exposure assessment in accordance with 29 CFR 1926 Section .1101;

d. Level of supervision;

e. Method of notification of other employers at the worksite;

f. Abatement method to include containment and control procedures;

g. Interface of trades involved in the construction;

h. Sequencing of asbestos related work;

i. Storage and disposal procedures and plan;

j. Type of wetting agent and asbestos encapsulant to be used;

k. Location of local exhaust equipment;

l. Air monitoring methods (personal, environmental and clearance);

m. Bulk sampling and analytical methods (if required);

n. A detailed description of the method to be employed in order to control the spread of ACM wastes and airborne fiber concentrations;

o. Fire and medical emergency response procedures;

p. The security procedures to be used for all regulated areas.

1.7.2 The Activity Hazard Analyses Appendix

Activity Hazard Analyses, for each major phase of work, shall be submitted and updated during the project. The Activity Hazard Analyses format shall be in accordance with EM 385-1-1 (Figure 1-1). The analysis shall define the activities to be performed for a major phase of work, identify the sequence of work, the specific hazards anticipated, and the control measures to be implemented to eliminate or reduce each hazard to an acceptable level. Work shall not proceed on that phase until the Activity Hazard Analyses has been accepted and a preparatory meeting has been conducted by the Contractor to discuss its contents with everyone engaged in the activities, including the onsite Government representatives. The Activity Hazard Analyses shall be continuously reviewed and, when appropriate, modified to address changing site conditions or operations.

1.8 PRECONSTRUCTION CONFERENCE AND ONSITE SAFETY

The Contractor and the Contractor's Designated Competent Person, Project Supervisor, and Designated IH shall meet with the Contracting Officer prior to beginning work at a safety preconstruction conference to discuss the details of the Contractor's submitted Accident Prevention Plan to include the Asbestos Hazard Abatement Plan and Activity Hazard Analyses appendices. Deficiencies in the Accident Prevention Plan will be discussed and the Accident Prevention Plan shall be revised to correct the deficiencies and resubmitted for acceptance. Any changes required in the specification as a result of the Accident Prevention Plan shall be identified specifically in the plan to allow for free discussion and acceptance by the Contracting Officer prior to the start of work. Onsite work shall not begin until the Accident Prevention Plan has been accepted. A copy of the written Accident Prevention Plan shall be maintained onsite. Changes and modifications to the accepted Accident Prevention Plan shall be made with the knowledge and concurrence of the Designated IH, the Project Supervisor, Designated Competent Person, and the Contracting Officer. Should any unforeseen hazard become evident during the performance of the work, the Designated IH shall bring such hazard to the attention of the Project Supervisor, Designated Competent Person, and the Contracting Officer, both verbally and in writing, for resolution as soon as possible. In the interim, all necessary action shall be taken by the Contractor to restore and maintain safe working conditions in order to safeguard onsite personnel, visitors, the public, and the environment. Once accepted by the Contracting Officer, the Accident Prevention Plan, including the Asbestos Hazard Abatement Plan and Activity Hazard Analyses will be enforced as if an addition to the contract. Disregard for the provisions of this contract or the accepted Accident Prevention Plan shall be cause for stopping of work, at the discretion of the Contracting Officer, until the matter has been rectified.

1.9 SECURITY

Fenced and locked security area shall be provided for each regulated area. A log book shall be kept documenting entry into and out of the regulated area. Entry into regulated areas shall only be by personnel authorized by the Contractor and the Contracting Officer. Personnel authorized to enter regulated areas shall be trained, be medically evaluated, and wear the required personal protective equipment, for the specific regulated area to be entered.

1.10 MEDICAL REQUIREMENTS

Medical requirements shall conform to 29 CFR 1926 Section .1101.

1.11 NOT USED

1.12 NOT USED

1.13 NOT USED

1.14 LICENSES, PERMITS AND NOTIFICATIONS

1.14.1 General Requirements

Necessary licenses, permits and notifications shall be obtained in conjunction with the project's asbestos abatement, transportation and disposal actions and timely notification furnished of such actions as required by federal, state, regional, and local authorities. The Contractor shall notify the Regional Office of the USEPA, state's environmental protection agency responsible for asbestos air emissions,

local air pollution control district/agency, state OSHA program and the Contracting Officer in writing, at least 10 days prior to the commencement of work in accordance with 40 CFR 61 Subpart M, and state and local requirements to include the mandatory "Notification of Demolition and Renovation Record" form and other required notification documents. Notification shall be by Certified Mail, Return Receipt Requested. The Contractor shall furnish copies of the receipts to the Contracting Officer, in writing, prior to the commencement of work. Local fire department shall be notified 3 days before fire-proofing material is removed from a building and the notice shall specify when the material contains asbestos. A copy of the rental company's written acknowledgment and agreement shall be provided as required by paragraph Rental Equipment. For licenses, permits and notifications that the Contractor is responsible for obtaining, the Contractor will pay any associated fees or other costs incurred.

1.14.2 Litigation and Notification

The Contractor shall notify the Contracting Officer if any of the following occur:

a. The Contractor or any of the subcontractors are served with notice of violation of any law, regulation, permit or license which relates to this Contract;

b. Proceedings are commenced which could lead to revocation of related permits or licenses; permits, licenses or other Government authorizations relating to this Contract are revoked;

c. Litigation is commenced which would affect this contract;

d. The Contractor or any of the subcontractors become aware that their equipment or facilities are not in compliance or may fail to comply in the future with applicable laws or regulations.

1.15 PERSONAL PROTECTIVE EQUIPMENT

Contracting Officer and authorized visitors shall be provided with training equivalent to that provided to Contractor employees in the selection, fitting, and use of the required personal protective equipment and the site safety and health requirements prior to entering work area. Contractor workers shall be provided with personal protective clothing and equipment and the Contractor shall ensure that it is worn properly. The Contractor's Designated IH and Designated Competent Person supervisor shall select and approve all the required personal protective clothing and equipment to be used.

1.16 MISCELLANEOUS ITEMS

A sufficient quantity of other items shall be provided including, but not limited to, scrapers, brushes, brooms, staple guns, tarpaulins, shovels, rubber squeegees, dust pans, other tools, scaffolding, staging, enclosed chutes, wooden ladders, lumber necessary for the construction of containments, UL approved temporary electrical equipment, material and cords, ground fault circuit interrupters, water hoses of sufficient length, fire extinguishers, first aid kits, portable toilets, logbooks, log forms, markers with indelible ink, spray paint in bright color to mark areas, project boundary fencing, etc.

PART 2 PRODUCTS

2.1 ENCAPSULANTS

Encapsulants shall conform to USEPA requirements, shall contain no toxic or hazardous substances and no solvent and shall meet the following requirements:

ALL ENCAPSULANTS

Requirement	Test Standard
Flame Spread - 25, Smoke Emission - 50	ASTM E 84
Combustion Toxicity Zero Mortality	Univ. of Pittsburgh Protocol
Life Expectancy, 20 yrs Accelerated Aging Test	ASTM C 732
Permeability, Min. 23 ng per Pa-sec-square m	ASTM E 96

Additional Requirements for Bridging Encapsulant

Requirement	Test Standard
Cohesion/Adhesion Test, 730 N/m	ASTM E 736
Fire Resistance, Negligible affect on fire resistance rating over 3 hour test (Classified by UL for use over fibrous and cementitious sprayed fireproofing)	ASTM E 119
Impact Resistance, Min. 4.7 N-m (Gardner Impact Test)	ASTM D 2794
Flexibility, no rupture or cracking (Mandrel Bend Test)	ASTM D 522

Additional Requirement for Penetrating Encapsulant

Requirement	Test Standard
Cohesion/Adhesion Test, 730 N/m	ASTM E 736
Fire Resistance, Negligible affect on fire resistance rating over 3 hour test (Classified by UL for use over fibrous and cementitious sprayed fireproofing)	ASTM E 119
Impact Resistance, Min. 4.7 N-m (Gardner Impact Test)	ASTM D 2794
Flexibility, no rupture or cracking (Mandrel Bend Test)	ASTM D 522

Additional Requirement for Lockdown Encapsulant

Requirement	Test Standard
Fire Resistance, Negligible affect on fire resistance rating over 3 hour test (Tested with fireproofing over encapsulant applied directly to steel member)	ASTM E 119
Bond Strength, 1.5 kN/m (Tests compatibility with cementitious and fibrous fireproofing)	ASTM E 736

2.2 ENCASEMENT PRODUCTS

Primary cellular polymer coat, polymer finish coat, and any other finish coat as approved by the Contracting Officer.

2.3 MISCELLANEOUS MATERIALS

2.3.1 Glovebag

Glovebags shall be provided as described in 29 CFR 1926 Section .1101. The glovebag assembly shall be 6 mil minimum thick plastic, prefabricated and seamless at the bottom with preprinted OSHA warning label.

2.3.2 Duct Tape

Industrial grade duct tape of appropriate widths suitable for bonding sheet plastic and disposal container shall be provided.

2.3.3 Disposal Bags

Leak-tight bags, 6 mil thick, shall be provided for placement of asbestos generated waste.

2.3.4 Fiberboard Drums

Fiberboard drums shall be provided with lockable ring tops and with stick-on labels as required by OSHA and EPA for disposable drums.

2.3.5 Cardboard Boxes

Heavy-duty corrugated cardboard boxes coated with plastic or wax to retard deterioration from moisture shall be provided as required by state and local requirements. Boxes shall fit into selected ACM disposal bags. Filled boxes shall be sealed leak-tight with duct tape.

2.3.6 Polyethylene Sheet

2.3.6.1 General

Film shall be clear, frosted or black and conform to ASTM D 4397.

2.3.6.2 Flame Resistant

Where a potential for fire exists, flame-resistant sheets shall be provided. Film shall be frosted or black and shall conform to the requirements of NFPA 701.

2.3.6.3 Reinforced

Reinforced sheets shall be provided where high skin strength is required such as where it constitutes the only barrier between the regulated area and the outdoor environment. The sheet stock shall consist of translucent, nylon-reinforced or woven-polyethylene thread laminated between two layers of polyethylene film. Film shall meet flame resistant standards of NFPA 701.

2.3.7 Amended Water

Amended water shall meet the requirements of ASTM D 1331.

2.3.8 Mastic Removing Solvent

Mastic removing solvent shall be nonflammable and shall not contain methylene chloride, glycol ether, or halogenated hydrocarbons. Solvents used onsite shall have a flash point greater than 60 degrees C.

PART 3 EXECUTION

3.1 GENERAL

The Contractor shall use the engineering controls and work practices required in 29 CFR 1926 Section .1101(g) in all operations regardless of the levels of exposure. Personnel shall wear and utilize protective clothing and equipment as specified. Eating, smoking, drinking, chewing or applying cosmetics shall not be permitted in the regulated area. All hot work (burning, cutting, welding, etc.) shall be conducted under strictly controlled conditions in conformance with 29 CFR 1926 Section .352, Fire Prevention. Personnel of other trades, not engaged in asbestos abatement activities, shall not be exposed at any time to airborne concentrations of asbestos unless all the administrative and personal protective provisions of the Contractor's Accident Prevention Plan are complied with. Power to the regulated area shall be locked-out and tagged in accordance with 29 CFR 1910 and temporary electrical service with ground fault circuit interrupters shall be provided as needed. Temporary electrical service shall be disconnected when necessary for wet removal. The Contractor shall stop abatement work in the regulated area immediately when the airborne total fiber concentration: (1) equals or exceeds 0.01 f/cc or the pre-abatement concentration, whichever is greater, outside the regulated area, or (2) equals or exceeds 1.0 f/cc inside the regulated area. The Contractor shall correct the condition to the satisfaction of the Contracting Officer, including visual inspection and air sampling. Work will resume only upon notification by the Contracting Officer. Corrective actions shall be documented.

3.2 PROTECTION OF ADJACENT WORK OR AREAS TO REMAIN

Asbestos abatement shall be performed without damage to or contamination of adjacent work or area. Where such work or area is damaged or contaminated, as verified by the Contracting Officer using visual inspection or sample analysis, it shall be restored to its original condition or decontaminated by the Contractor at no expense to the Government as deemed appropriate by the Contracting Officer. This includes inadvertent spill of dirt, dust or debris in which it is reasonable to conclude that asbestos may exist. When these spills occur, work shall stop in all effected areas immediately and the spill shall be cleaned. When satisfactory visual inspection and air sampling analysis results are obtained and have been evaluated by the Contractor's Designated IH and the Contracting Officer, work may proceed.

3.3 NOT USED

3.4 NOT USED

3.5 NOT USED

3.6 NOT USED

3.7 NOT USED

3.8 NOT USED

3.9 NOT USED

3.10 CLEARANCE CERTIFICATION

When asbestos abatement is complete and all ACM waste is removed from the regulated areas, and final clean-up is completed, the Contracting Officer will certify the areas as safe before the warning signs and boundary warning tape can be removed. After final clean-up and acceptable airborne concentrations are attained, but before the HEPA unit is turned off and the containment removed, the Contractor shall remove all pre-filters on the building HVAC system and provide new pre-filters. The Contractor shall dispose of such filters as asbestos contaminated materials. HVAC mechanical, and electrical systems shall be re-established in proper working order. The Contractor and the Contracting Officer will visually inspect all surfaces within the containment for residual material or accumulated debris. The Contractor shall reclean all areas showing dust or residual materials. The Contracting Officer will certify in writing that the area is safe before unrestricted entry is permitted. The Government will have the option to perform monitoring to certify the areas are safe before entry is permitted.

3.11 CLEANUP AND DISPOSAL

3.11.1 Title to ACM Materials

ACM material resulting from abatement work, except as specified otherwise, shall become the property of the Contractor and shall be disposed of as specified and in accordance with applicable federal, state and local regulations.

3.11.2 Collection and Disposal of Asbestos

All ACM waste including contaminated wastewater filters, scrap, debris, bags, containers, equipment, and asbestos contaminated clothing, shall be collected and placed in leak-tight containers such as double plastic bags; sealed double wrapped polyethylene sheet; sealed fiberboard boxes or other approved containers. Waste within the containers shall be wetted in case the container is breeched. Asbestos-containing waste shall be disposed of at an EPA, state and local approved asbestos landfill off Government property. For temporary storage, sealed impermeable containers shall be stored in an asbestos waste load-out unit or in a storage/transportation conveyance (i.e., dumpster, roll-off waste boxes, etc.) in a manner acceptable to and in an area assigned by the Contracting Officer. Procedure for hauling and disposal shall comply with 40 CFR 241, 40 CFR 61 Subpart M, state, regional, and local standards.

3.11.3 NOT USED

3.11.4 NOT USED

3.11.5 Weigh Bill and Delivery Tickets

Copies of weigh bills and delivery tickets shall be submitted to the Contracting Officer during the progress of the work. All weigh bills, delivery tickets and bills of lading must be signed by a member of the 914 AW/CEV prior to shipping off base. The Contractor shall furnish the Contracting Officer scale tickets for each load of ACM weighed and certified. These tickets shall include tare weight, identification mark for each vehicle weighed, date, time and location of loading and unloading.

Tickets shall be furnished at the point and time individual trucks arrive at the worksite. A master log of all vehicle loading shall be furnished for each day of loading operations. Before the final statement is allowed, the Contractor shall file with the Contracting Officer certified weigh bills and/or certified tickets and manifests of all ACM actually disposed by the Contractor for this contract.

3.11.6 Asbestos Waste Shipment Record

The Contractor shall complete and provide the Contracting Officer final completed copies of the Waste Shipment Record for all shipments of waste material as specified in 40 CFR 61 Subpart M and other required state waste manifest shipment records within 3 days of delivery to the landfill. Each Waste Shipment Record shall be signed and dated by the generator, the waste transporter and disposal facility operator.

TABLE 1
INDIVIDUAL WORK TASK DATA ELEMENTS

There is a separate data sheet for each individual work task.
Sheet___of___

1. WORK TASK DESIGNATION NUMBER _____
2. LOCATION OF WORK TASK_____
   _____
3. BRIEF DESCRIPTION OF MATERIAL TO BE ABATED:_____
   _____

   Type of Asbestos _____
   % asbestos content _____
4. ABATEMENT TECHNIQUE TO BE USED_____
5. OSHA ASBESTOS CLASS DESIGNATION FOR WORK TASK_____
6. EPA NESHAP FRIABILITY DESIGNATION FOR WORK TASK
   Friable ____Non-friable Category I ____Non-friable Category II_____
7. FORM _____ and CONDITION OF ACM: GOOD____FAIR____POOR_____
8. QUANTITY: METERS_____, SQUARE METERS_____

NOTES:

(1) Numeric sequence of individual work tasks (1,2,3,4, etc.) for each regulated area. Each category of EPA friability/OSHA class has a separate task.
(2) Specific location of work (building, floor, area, e.g. Building 1421, 2nd Floor, Rm 201)
(3) A description of material to be abated (example: horizontal pipe, cement wall panels, tile, stucco, etc.) type of asbestos (chrysotile, amosite, crocidolite, etc.); and % asbestos content.
(4) Technique to be used: Removal = REM; Encapsulation = ENCAP; Encasement = ENCAS; Enclosure = ENCL; Repair = REP.
(5) Class designation: Class I, II, III, or IV (OSHA designation).
(6) Friability of materials: Check the applicable EPA NESHAP friability designation.
(7) Form: Interior or Exterior Architectural = IA or EA; Mechanical/Electrical = ME. Condition: Good = G; Fair = F; Poor = P.
(8) Quantity of ACM for each work task in meters or square meters.

CERTIFICATE OF WORKER'S ACKNOWLEDGMENT

PROJECT NAME _____ CONTRACT NO. _____
PROJECT ADDRESS _____
CONTRACTOR FIRM NAME _____
EMPLOYEE'S NAME _____,_____,_____,_____-_____-_____
(Print) (Last) (First) (MI) Social Security Number

WORKING WITH ASBESTOS CAN BE DANGEROUS. INHALING ASBESTOS FIBERS HAS BEEN LINKED WITH TYPES OF LUNG DISEASE AND CANCER. IF YOU SMOKE AND INHALE ASBESTOS FIBERS, THE CHANCE THAT YOU WILL DEVELOP LUNG CANCER IS GREATER THAN THAT OF THE NONSMOKING PUBLIC.

Your employer's contract for the above project requires that you be provided and you complete formal asbestos training specific to the type of work you will perform and project specific training; that you be supplied with proper personal protective equipment including a respirator, that you be trained in its use; and that you receive a medical examination to evaluate your physical capacity to perform your assigned work tasks, under the environmental conditions expected, while wearing the required personal protective equipment. These things are to be done at no cost to you. By signing this certification, you are acknowledging that your employer has met these obligations to you. The Contractor's Designated Industrial Hygienist will check the block(s) for the type of formal training you have completed. Review the checked blocks prior signing this certification.

FORMAL TRAINING:

____ a. For Competent Persons and Supervisors: I have completed EPA's Model Accreditation Program (MAP) training course, "Contractor/Supervisor" that meets this State's requirements.

b. For Workers:

____ (1) For OSHA Class I work: I have completed EPA's MAP training course, "Worker" that meets this State's requirements.

____ (2) For OSHA Class II work (where there will be abatement of more than one type of Class II materials i.e. roofing, siding, floor tile, etc.): I have completed EPA's MAP training course, "Worker" that meets this State's requirements.

(3) For OSHA Class II work (there will only be abatement of one type of Class II material):

____ (a) I have completed an 8-hour training class on the elements of 29 CFR 1926 Section .1101(k)(9)(viii) in addition to the specific work practices and engineering controls of 29 CFR 1926 Section .1101(g) and hands-on training.

____ (b) I have completed EPA's MAP training course, "Worker" that meets this State's requirements.

____ (4) For OSHA Class III work: I have completed at least a 16-hour course consistent with EPA requirements for training of local education agency maintenance and custodial staff at 40 CFR 763 Section .92(a)(2) and the elements of 29 CFR 1926 Section .1101(k)(9)(viii) in addition to the specific work practices and engineering controls at 29 CFR 1926 Section .1101 and hands-on training.

CERTIFICATE OF WORKER'S ACKNOWLEDGMENT

PROJECT NAME _____ CONTRACT NO. _____
PROJECT ADDRESS _____
CONTRACTOR FIRM NAME _____
EMPLOYEE'S NAME _____,_____,_____,_____-_____-_____
(Print) (Last) (First) (MI) Social Security Number

WORKING WITH ASBESTOS CAN BE DANGEROUS. INHALING ASBESTOS FIBERS HAS BEEN LINKED WITH TYPES OF LUNG DISEASE AND CANCER. IF YOU SMOKE AND INHALE ASBESTOS FIBERS, THE CHANCE THAT YOU WILL DEVELOP LUNG CANCER IS GREATER THAN THAT OF THE NONSMOKING PUBLIC.

____ (5) For OSHA Class IV work: I have completed at least a 2-hr course consistent with EPA requirements for training of local education agency maintenance and custodial staff at 40 CFR 763 (a)(1) and the elements of 29 CFR 1926 Section .1101(k)(9)(viii) in addition to the specific work practices and engineering controls at 29 CFR 1926 Section .1101(g) and hands-on training.

____ c. Workers, Supervisors and the Designated Competent Person: I have completed annual refresher training as required by EPA's MAP that meets this State's requirements.

PROJECT SPECIFIC TRAINING:

____ I have been provided and have completed the project specific training required by this Contract. My employer's Designated Industrial Hygienist and Designated Competent Person conducted the training.

RESPIRATORY PROTECTION:

____ I have been trained in accordance with the criteria in the Contractor's Respiratory Protection program. I have been trained in the dangers of handling
and breathing asbestos dust and in the proper work procedures and use and limitations of the respirator(s) I will wear. I have been trained in and will abide by the facial hair and contact lens use policy of my employer.

RESPIRATOR FIT-TEST TRAINING:

____ I have been trained in the proper selection, fit, use, care, cleaning, maintenance, and storage of the respirator(s) that I will wear. I have been fit-tested in accordance with the criteria in the Contractor's Respiratory Program and have received a satisfactory fit. I have been assigned my individual respirator. I have been taught how to properly perform positive and negative pressure fit-check upon donning negative pressure respirators each time.

MEDICAL EXAMINATION:

____ I have had a medical examination within the last twelve months which was paid for by my employer. The examination included: health history, pulmonary function tests, and may have included an evaluation of a chest x-ray. A physician made a determination regarding my physical capacity to perform work tasks on the project while wearing personal protective equipment including a respirator. I was personally provided a copy and informed of the results of that examination. My employer's Industrial Hygienist evaluated the medical certification provided by the physician and checked the appropriate blank below. The physician determined that there:

___ were no limitations to performing the required work tasks.
___ were identified physical limitations to performing the required work

CERTIFICATE OF WORKER'S ACKNOWLEDGMENT

PROJECT NAME _____ CONTRACT NO. _____
PROJECT ADDRESS _____
CONTRACTOR FIRM NAME _____
EMPLOYEE'S NAME _____,_____,_____,_____-_____-_____
(Print) (Last) (First) (MI) Social Security Number

WORKING WITH ASBESTOS CAN BE DANGEROUS. INHALING ASBESTOS FIBERS HAS BEEN LINKED WITH TYPES OF LUNG DISEASE AND CANCER. IF YOU SMOKE AND INHALE ASBESTOS FIBERS, THE CHANCE THAT YOU WILL DEVELOP LUNG CANCER IS GREATER THAN THAN THAT OF THE NONSMOKING PUBLIC.

tasks.

Date of the medical examination _____

Employee Signature _____ date _____

Contractor's Industrial Hygienist Signature _____ date _____

-- End of Section --

BUILDING INFORMATION

Building Name: A/C Maintenance Dock
Building Number: 706
Year Constructed: 1951
Building Area: 39,911 sq.ft.

ASBESTOS CONTAINING MATERIALS

Material Abbreviation	Description	Results
PI1	Pipe Insulation - Aircell Supply	>1% Asbestos
FX1	Mud Fixtures on Aircell Supply Pipe Ins.	>1% Asbestos
PI2	Pipe Insulation - Aircell Return	>1% Asbestos
FX2	Mud Fixtures on Aircell Return Pipe Ins.	>1% Asbestos
PI5	Pipe Insulation - Mag	>1% Asbestos
FX5	Mud Fixtures on Mag Pipe Ins.	>1% Asbestos
FT1	Floor Tile - 12x12 Brown w/white	6.7% Chrysotile
FT9	Floor Tile - 12 x12 Brown w/white, orange	<0.1% Chrysotile
FT2	Floor Tile - 9x9 Green w/white	20% Chrysotile
FT3	Floor Tile - 12x12 Cream w/gray	6.1% Chrysotile
FT4	Floor Tile - 12x12 Lt.Gray w/Dk. Gray	14% Chrysotile
FT5	Floor Tile - 12x12 Cream w/brown	20% Chrysotile
FT6	Floor Tile - 12x12 Cream w/beige	11% Chrysotile
FT7	Floor tile - 12x12 Black w/white	22% Chrysotile
FT8	Floor Tile - 12x12 Brown w/white	Sample taken
FT10	Floor Tile - 12x12 Rust w/white (4 pieces)	sampled 19 Nov 96
TR1	Transite Panels	Assumed
~~BU1~~	~~Built-Up Roofing~~	~~Assumed~~
Rope1	Brown rope from inner seal on boiler #1	>75% Chrysotile

SAMPLED MATERIALS NOT DETECTING ASBESTOS

Material Abbreviation	Description
FX3	Mud Fixtures on Fiberglass Pipe Ins.
BB1	Boiler Breeching
FT10	Floor Tile 12x12 Rust w/white (by TEM, 20 Dec 96)

SAMPLE INFORMATION

BLDG. #706

Sample #	Lab ID #	Analytical Results
706-PII-A	57380	50.0% Chrysotile
706-FXI-A	57379	33.3% Chrysotile
706-FX1-B	57381	66.7% Chrysotile
706-FX1-C	57389	40.0% Chrysotile
706-PI2-A	57375	50.0% Chrysotile
706-FX2-A	57376	7.7% Chrysotile
706-FX2-B	57384	Not Detected
706-FX2-C	57390	5.4% Chrysotile
706-FX3-A	57377	Not Detected
706-FX3-B	57393	Not Detected
706-FX3-C	57378	Not Detected
706-FX3-D	57394	Not Detected
706-FX3-E	57385	Not Detected
706-FX3-F	57387	Not Detected
706-FX3-G	57391	Not Detected
706-FX3-H	57392	Not Detected
706-PI5-A	57382	44.4% Amosite
706-FX5-A	57383	11.1% Chrysotile
706-BBI-A	57395	Not Detected
706-BBI-B	57396	Not Detected
706-BBI-C	57397	Not Detected
FT1	GM 950075	6.7% Chrysotile (TEM. 8/23/95)
FT9	GM950082	<0.1% Chrysotile (TEM. 8/23/95)
FT2	GM950081	20% Chrysotile (PLM, 8/11/95)
FT3	GM950079	6.1% Chrysotile (TEM. 8/23/95)
FT4	GM950077	14% Chrysotile (TEM. 8/23/95)
FT5	GM950078	Not dectected (TEM, 8/23/95)
FT6	GM950076	<1% Chrysotile (TEM. 8/23/95)
FT7	GM950080	Tile 22%, Mastic 10% (TEM. 8/23/95)
BI1	GM960256	Boiler insulation inside housing (looks like gypsum board) No asbestos found (by PLM. 16 Dec 96)
Rope1	GM960255	>75% Chrysotile (by PLM. 16 Dec 96)
FT10	GM960254	<0.1% Chrysotile (by TEM. 20 Dec 96)

ASBESTOS CONTAINING MATERIALS BY ROOM

BLDG. #706

Room #	Material
A	PI1 - Possibly gone FX1 check PI2 projects FX2
B	-
C	PI1 FX1 PI2 FX2 PI5 FT8 ~~PI5~~
D	-
1	~~PI1~~ FT1 FT10 (4 pieces)
2	FT6 PI1 FX1
3	Rope1 BI1
4	PI1 FX1 PI2 FX2
6	FT4 PI1 FX1 PI2 FX2
6A	FT6
6B	FT4 PI1 FX1
7	PI1 FT3 FT5
7A	FT3
8	FT2
9	FT2 (under carpet)
10	-
11	FT2
12	PI1 FX1 PI2 FX2
12A	-
13	-
14	FT9
16	-
ROOF	~~BUI~~

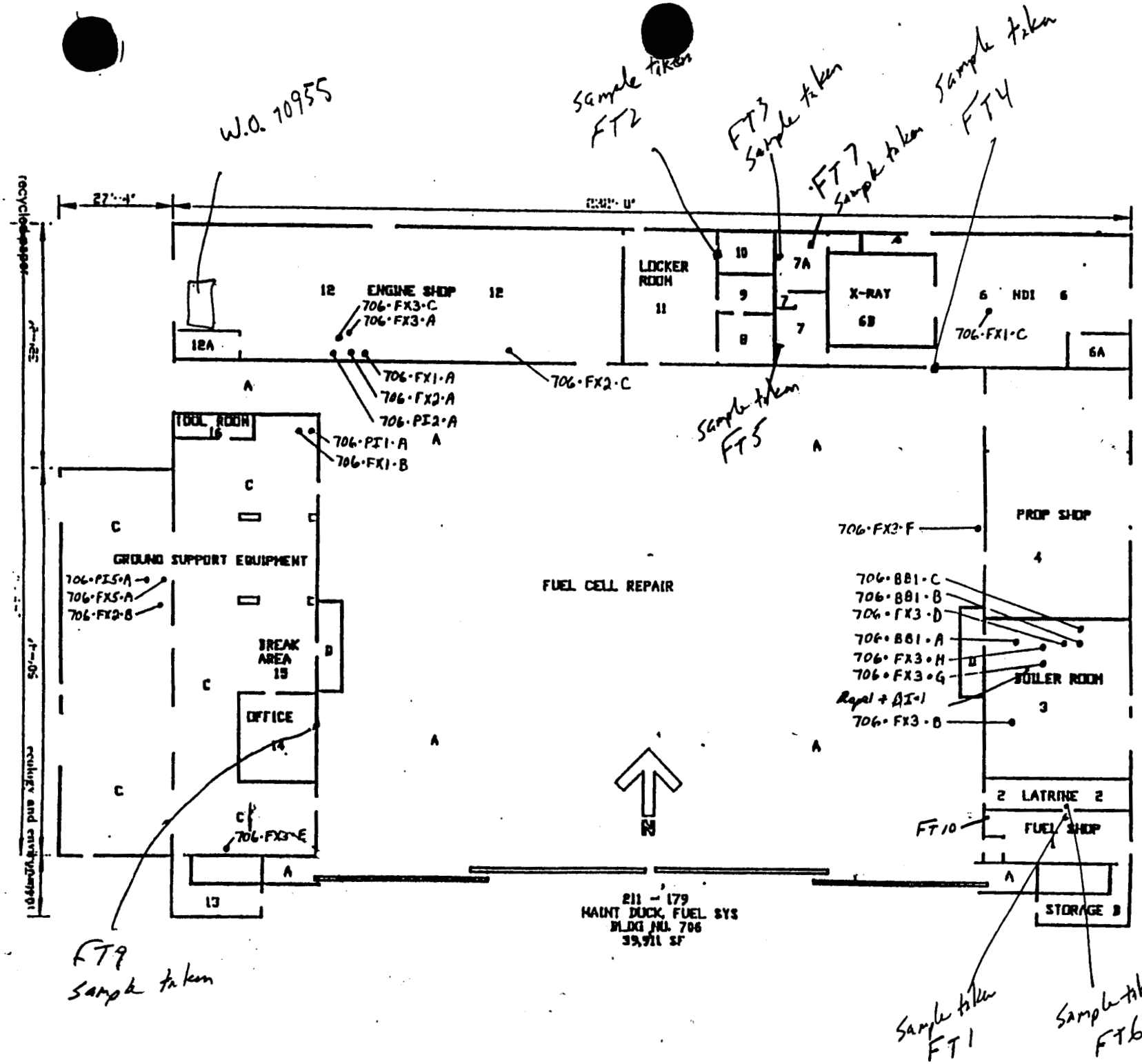

BLDG DATA 211 - 153			
RM # / USE ORG	SF	VS	
6 / HAFP	1,411	-	
6A / HAFF	128	2	
6B / HAFF	480	1	
7 / HAFF	273	1	
7A / HAFF	156	-	
TOTAL	2,448	4	
BLDG DATA 211 - 157			
4 / HAFP	2,100	3	
8 / HAFP	155	2	
9 / HAFP	155	1	
10 / HAFP	155	-	
11 / HAFP	591	-	
12 / HAFP	3,864	1	15
12A / HAFP	112	-	
TOTAL	7,132	7	2

1 SUPERVISUR + 14 SHOP PERSONNEL

BLDG DATA 211 - 179			
1 / HAFA	490	2	
2 / HAFG	245	-	
A / HAFA	21,618	-	
B / HAFA	313	-	
D / HAFG	228	-	
TOTAL	22,894	2	
BLDG DATA 218 - 712			
13 / HAFG	313	2	
14 / HAFG	306	3	
14 / HAFG	306	-	
16 / HAFG	114	-	
C / HAFG	5,138	-	
TOTAL	6,177	5	
BLDG DATA 812 - 117			
3 / BOIL RM	1,260	-	
BLDG TOTAL	39,911	18	3

LEGEND
RM # / USE ORG = ROOM # / US ORGANIZATION
SF = SQUARE FEET
VS = WORK STATION
P = PEAK # OF PERSONNEL

NIAGARA FALLS, IAP
914 TAG / DEE
30 SEPT 89

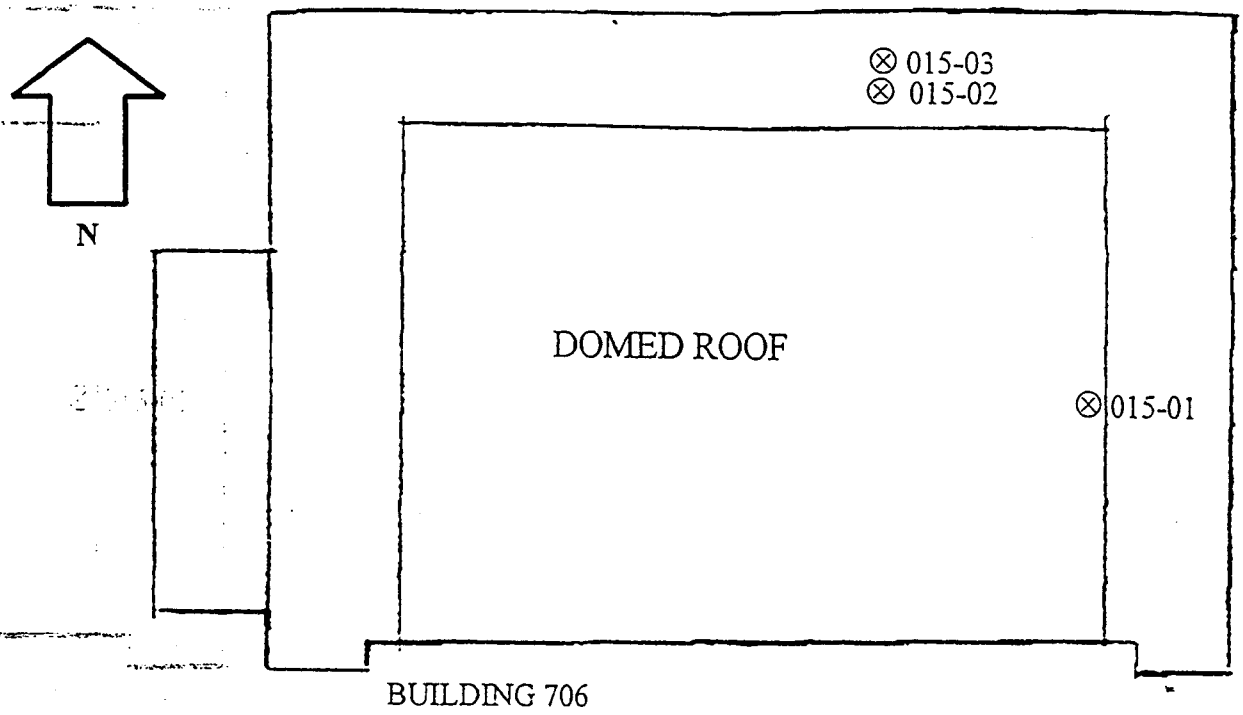

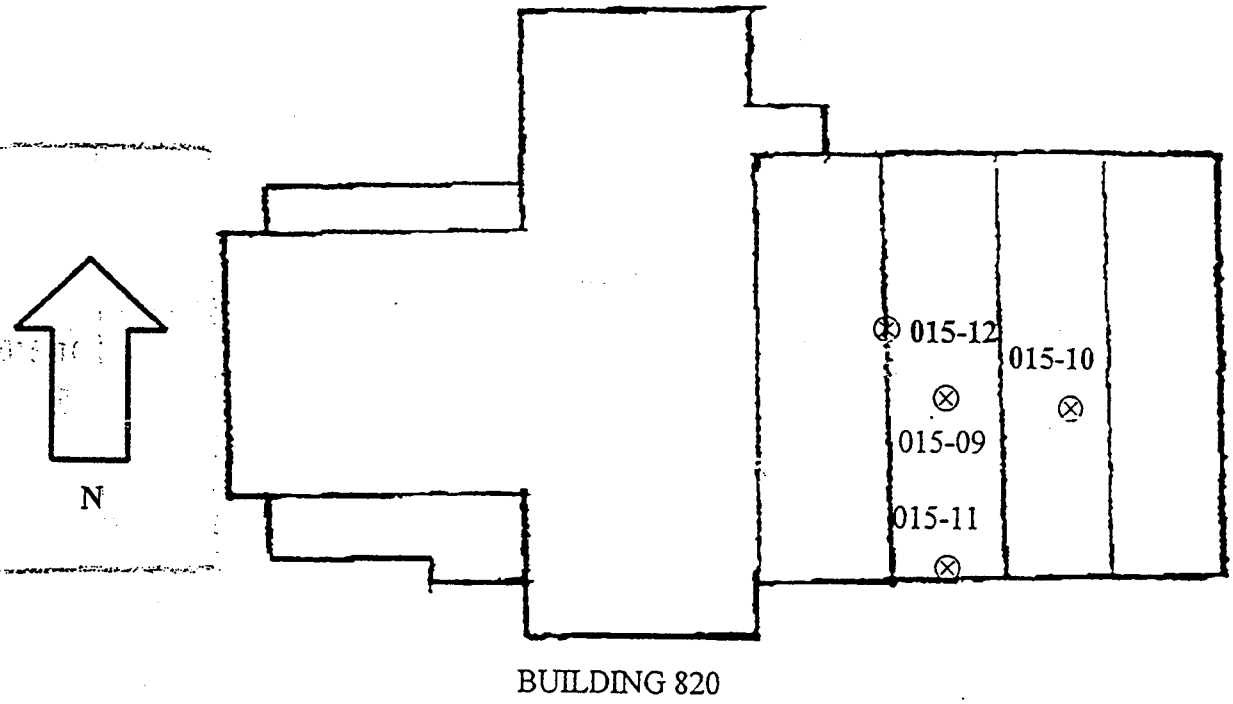

SAMPLES IN BOLD LETTERING ARE POSITIVE FOR ASBESTOS. SEE TABLE 2.1 FOR DESCRIPTION OF MATERIALS.

FIGURE 2

ASBESTOS BULK SAMPLE LOCATION MAP

NIAGARA FALLS AIR FORCE BASE
ROOF REPLACEMENT
BUILDINGS 706 & 820

WATTS ENGINEERS
3826 MAIN STREET
BUFFALO, NEW YORK 14226

NOT TO SCALE: | FEBRUARY '98

SECTION 02090

REMOVAL AND DISPOSAL OF LEAD CONTAINING PAINTED MATERIALS

PART 1 GENERAL

1.1 INTENT

The intention of this specification is to summarize the requirements of the contractor to protect his workers in accordance with the OSHA Lead Construction Standard detailed in 29 CFR 1926.62. This standard is intended to reduce the occupational health hazard of lead exposure and must be applied to all occupational exposures to lead in construction work in any amount. The intent of this specification is also to summarize requirements for segregation and disposal of lead containing waste resulting from the demolition.

The Contractor is required by 29 CFR 1926.62 to perform an exposure assessment to determine if any employee may be exposed to lead at or above the action level of 30 ug/m^3 as an 8-hour TWA. As per the standard the contractor must perform initial air monitoring or present objective data, demonstrating that under any conditions or activity involving lead at or above the action level does not exist. During initial air monitoring activities, or until a negative exposure assessment has been achieved all employees must wear respiratory protection and other personal protective equipment (PPE) required by the standard.

This document only summarizes requirements of the OSHA standard for convenience purposes and is not all inclusive. All requirements of 29 CFR 1926.62 are to be strictly followed along with all other applicable Federal, State and local regulations.

1.2 REFERENCES

The publications listed below form a part of this specification to the extent referenced. The publications are referenced within the text by basic designation only.

AMERICAN NATIONAL STANDARDS INSTITUTE (ANSI)

ANSI Z9.2	(1979) Fundamentals Governing the Design and Operation of Local Exhaust Systems
ANSI Z88.2	(1980) Respiratory Protection

CODE OF FEDERAL REGULATIONS (CFR)

29 CFR 1910.132	General Requirements
29 CFR 1910.134	Respiratory Protection
29 CFR 1910.1025	Lead Standard for General Industry
29 CFR 1910.1200	Hazard Communication

29 CFR 1926.55	Gases, Vapors, Fumes, Dusts, and Mists
29 CFR 1926.57	Ventilation
29 CFR 1926.62	Lead Standard for General Industry
40 CFR 260	Hazard Waste Management Systems: General
40 CFR 261	Identification and Listing of Hazardous Waste
40 CFR 262	Generators of Hazardous Waste
40 CFR 263	Transporters of Hazardous Waste
40 CFR 264	Owners and Operators of Hazardous Waste Treatment, Storage, and Disposal Facilities
40 CFR 265	Owners and Operators of Hazardous Waste Treatment, Storage, and Disposal Facilities
40 CFR 268	Land Disposal Restrictions
49 CFR 172	Hazardous Materials Tables and Hazardous Materials Communications Regulations
49 CFR 178	Shipping Container Specification

UNDERWRITERS LABORATORIES INC (UL)

UL 586	(1990) High-Efficiency, Particulate, Air Filter Units

1.3 DEFINITIONS

1.3.1 Action Level

Employee exposure, without regard to use of respirators, to an airborne concentration of lead of 30 micrograms per cubic meter (ug/m^3) of air averaged over an 8-hour period. As used in this section, "30 micrograms per cubic meter of air" refers to the action level.

1.3.2 Area Monitoring

Sampling of lead concentrations within the lead control area and inside the physical boundaries which is representative of the airborne lead concentrations which may reach the breathing zone of personnel potentially exposed to lead.

1.3.3 Physical Boundary

Area physically roped or partitioned off around a lead control area to limit unauthorized entry of personnel. As used in this section, "inside boundary" will mean the same as "inside lead control area."

1.3.4 Certified Industrial Hygienist (CIH)

As used in this section, refers to an Industrial Hygienist employed by the

Contractor and is certified by the American Board of Industrial Hygiene in comprehensive practice.

1.3.5 Change Rooms and Shower Facilities

Rooms within the designated physical boundary around the lead control area equipped with separate storage facilities for clean protective work clothing and equipment and for street clothes which prevent cross-contamination.

1.3.6 Decontamination Room

Room for removal of contaminated personal protective equipment (PPE).

1.3.7 Eight-Hour Time Weighted Average (TWA)

Airborne concentration of lead averaged over an 8-hour workday to which an employee is exposed.

1.3.8 High Efficiency Particulate Air (HEPA) Filter Equipment

HEPA filtered vacuuming equipment with a UL 586 filter system capable of collecting and retaining lead-contaminated paint dust. A high efficiency particulate filter means 99.97 percent efficient against 0.3 micron size particles.

1.3.9 Lead

Metallic lead, inorganic lead compounds, and organic lead soaps. Excluded from this definition are other organic lead compounds.

1.3.10 Lead Control Area

An area isolated by physical boundaries to prevent unauthorized entry of personnel. It may consist of an enclosed area or structure with full containment to prevent the spread of lead dust, paint chips, or debris of lead-containing paint removal/demolition operations or in those cases, when an enclosed lead control area is not practical, restriction of access into the area may be accomplished by roping off the area or by providing some other form of physical boundary constraint.

1.3.11 Lead Permissible Exposure Limit (PEL)

Fifty micrograms per cubic meter of air as an 8-hour time weighted average as determined by 29 CFR 1910.1025. If an employee is exposed for more than 8 hours in a work day, the PEL shall be determined by the following formula:

PEL (micrograms/cubic meter of air) = 400/No. hrs worked per day.

1.3.12 Personal Monitoring

Sampling of lead concentrations within the breathing zone of an employee to determine the 8-hour time weighted average concentration in accordance with 29 CFR 1926.62. Samples shall be representative of the employee's work tasks. Breathing zone shall be considered an area within a hemisphere, forward of the shoulders, with a radius of 150 mm to 225 mm and the center at the nose or mouth of an employee.

1.4 QUALITY ASSURANCE

1.4.1 Medical Examinations

Before exposure to lead-contaminated dust, provide workers with a comprehensive medical examination as required by 29 CFR 1926.62 and 29 CFR 1910.1200. The examination will not be required if adequate records show that employees have been examined as required by 29 CFR 1926.62 within the last year.

1.4.1.1 Medical Records

Maintain complete and accurate medical records of employees for a period of at least 40 years or for the duration of employment plus 20 years, whichever is longer.

1.4.2 CIH or Their Designated Representative Responsibilities

a. Certify training.

b. Review and approve lead-containing paint demolition plan for conformance to the applicable referenced standards.

c. Inspect the demolition work for conformance with the approved plan.

d. Direct monitoring.

e. Ensure work is performed in strict accordance with specifications at all times.

f. Ensure hazardous exposure to personnel and to the environment are adequately controlled at all times.

1.4.3 Training

Train each employee performing paint demolition, disposal, and air sampling operations prior to the time of initial job assignment, in accordance with 29 CFR 1926.62.

1.4.3.1 Training Certification

Submit certificates signed and dated by the CIH and by each employee stating that the employee has received training.

1.4.4 Respiratory Protection Program

a. Furnish each employee required to wear a negative pressure respirator or other appropriate type with a respirator fit test at the time of initial fitting and at least every 6 months thereafter as required by 29 CFR 1926.62.

b. Establish and implement a respiratory program as required by ANSI Z88.2, 29 CFR 1910.134, 29 CFR 1910.1025, 29 CFR 1926.62, and 29 CFR 1926.55.

1.4.5 Hazard Communication Program

Establish and implement a Hazard Communication Program as required by 29 CFR 1910.1200.

1.4.6 NOT USED

1.4.7 Safety and Health Compliance

In addition to the detailed requirements of this specification, comply with laws, ordinances, rules, and regulations of federal, state, and local authorities regarding removing, handling, storing, transporting, and disposing of lead waste materials. Comply with the applicable requirements of the current issue of 29 CFR 1926.62.

1.4.8 Pre-Construction Conference

Along with the CIH, meet with the Contracting Officer to discuss in detail the lead-containing paint demolition work plan, including work procedures and precautions for the work plan.

1.5 SUBMITTALS

Submit the following in accordance with Section 01330, SUBMITTAL PROCEDURES. The testing laboratory qualifications and lead-containing demolition plan shall be approved by the government. All other submittals will be for informational purposes only.

1.5.1 SD-01, Data

1.5.1.1 Manufacturer's Catalog Data; FIO

a. Vacuum filters

b. Respirators

1.5.2 NOT USED

1.5.3 SD-08, Statements

a. Qualifications of CIH; FIO
b. Exposure assessment documentation; FIO
c. Testing laboratory qualifications; GA
d. Lead-containing paint demolition plan; GA
e. Rental equipment notification; FIO
f. CIH approval of work plan (signature, date, and certification number); FIO
g. Respiratory protection program; FIO
h. Hazard communication program; FIO

1.5.3.1 CIH Qualifications; FIO

Submit name, address, and telephone number of the CIH selected to perform responsibilities in paragraph entitled "CIH Responsibilities." Provide previous experience of the CIH. Submit proper documentation that the Industrial Hygienist is certified by the American Board of Industrial Hygiene in comprehensive practice, including certification number and date of certification/recertification.

1.5.3.2 Testing Laboratory; GA

The Contractor will provide documentation which includes the name, address and telephone number of the laboratories to be providing services. In addition, the documentation will indicate that each laboratory is an EPA

National Lead Laboratory Accreditation Program (NLLAP) accredited laboratory that each is rated proficient in the NIOSH/EPA Environmental Lead Proficiency Analytical Testing Program (ELPAT) and will document the date of current accreditation. Certification will include accreditation for heavy metal analysis, list of experience relevant to analyses of lead in air, and a Quality Assurance and Quality Control Program.

1.5.3.3 Written Compliance Plan; GA

In accordance with 29 CFR 1926.62 (e)(2)(I), the Contractor shall submit a detailed job-specific plan for the work procedures to be used in the demolition of the buildings. The written compliance plan should include but is not limited to:

a. Details of the planned exposure assessment or a discussion of the objective data utilized from a previous project.

b. A description of equipment and materials, controls, crew size, job responsibilities, and operations and maintenance procedures for each activity in which lead is emitted.

c. A description of specific control methods (e.g., abatement process selection, wet methods). For engineering controls, include supporting engineering plans and studies used to select methods.

d. Technology considered in meeting the PEL.

e. Air monitoring data documenting sources of lead emissions.

f. A detailed implementation schedule for the compliance plan, including the schedule for inspections by a competent person.

g. A description of the lead work practice program that will be used to control worker exposures. (This includes the use of protective work clothing and equipment, hygiene facilities and practices, and housekeeping practices.

h. A description of arrangements made among contractors on multi-contractor work sites to inform affected employees (including bystanders) of potential lead exposures, and to clarify responsibilities with regard to control of those exposures.

1.5.4 Air Monitoring; FIO

Submit monitoring results to the Contracting Officer within 3 working days, signed by the testing laboratory employee performing the air monitoring, the employee that analyzed the sample, and the CIH.

1.5.5 NOT USED

1.5.6 SD-18, Records

a. Certification of medical examinations; FIO
b. Employee Training Certification; FIO

1.6 REMOVAL

1.6.1 Title to Materials

Lead containing materials resulting from demolition work, except those classified as hazardous waste, will become the property of the Contractor and will be disposed in accordance with Section 3.5 of this specification.

1.7 EQUIPMENT

The Contractor shall furnish the Contracting Officer with one complete set of personal protective equipment daily, as required by the CIH, for entry into and inspection of the demolition work within the lead controlled area. Required personal protective equipment may include, but is not limited to fitted respirators and whole body covering including appropriate foot, head, and hand protection. PPE shall be provided by the contractor and will remain the property of the contractor.

1.7.1 Respirators

Respirators will comply with the requirements of 29 CFR 1910.134. Furnish appropriate respirators approved by the NIOSH, Department of Health and Human Services, for use in atmospheres containing lead dust.

1.7.2 Special Protective Clothing

Special protective clothing will be worn as per the Lead Protection Plan (sec. 1.5.3.3) and in accordance with OSHA 29 CFR 1910.132. Reduction of levels of protective clothing can only be performed after approval from the CIH.

1.7.2.1 Furnished Clothing

Protective clothing shall be provided in a clean and dry condition at least weekly, and daily to employees whose exposure levels without regard to use of a respirator are over 200 ug/m^3 of lead as an 8-hour TWA. The Contractor shall provide for the cleaning, laundering, and disposal of protective clothing and equipment as needed.

1.7.2.2 Protective Clothing Handling

The Contractor shall assure that contaminated protective clothing which is to be cleaned, laundered, or disposed of, is placed in a closed container in the change area which prevents dispersion of lead outside the container.

The container shall be labeled as follows:

"CAUTION: Clothing contaminated with lead. Do not remove dust by blowing or shaking. Dispose of lead contaminated wash water in accordance with applicable local, state, or federal regulations."

1.7.3 Rental Equipment Notification

If rental equipment is to be used during lead-containing paint handling, removal, or demolition, notify the rental agency in writing concerning the intended use of the equipment. Furnish a copy of the written notification to the Contracting Officer.

1.7.4 Vacuum Filters

UL 586 labeled HEPA filter must be used.

PART 2 PRODUCTS

Not applicable.

PART 3 EXECUTION

3.1 PROTECTION

3.1.1 Notification

Notify the Contracting Officer 20 days prior to the start of any demolition work where elements with lead containing coatings or paint are present.

3.1.2 NOT USED

3.1.3 Protection of Existing Work to Remain

Perform demolition work without damage or contamination of adjacent areas. Where existing work is damaged or contaminated, restore work to its original condition or better.

3.1.4 Boundary Requirements

Establish a lead control area to prevent the spread of lead dust, paint chips, or debris of lead-containing paint and restrict access to the area. Provide physical boundaries around the lead control area by roping off the area or providing curtains, portable partitions or other enclosures to ensure that airborne concentrations of lead will not reach 30 micrograms per cubic meter of air outside of the lead control area.

3.1.5 NOT USED

3.1.6 NOT USED

3.1.7 Change Room and Shower Facilities

Item 3.1.7 will only be required in a case of a positive exposure assessment according to Section 3.1.11 of this specification. Provide clean change rooms and shower facilities (if feasible), within the physical boundary around the designated lead control area in accordance with requirements of 29 CFR 1926.62.

3.1.8 Mechanical Ventilation System

Item 3.1.8 will only be required in case of a positive initial determination according to Section 3.1.11 of this specification. If exposure is in excess of the PEL, the following control devices may be implemented:

a. Use adequate ventilation to control personnel exposure to lead in accordance with 29 CFR 1926.57.

b. To the extent feasible, use fixed local exhaust ventilation connected to HEPA filters or other collection systems, approved by the certified industrial hygienist. Local exhaust ventilation systems shall be designed, constructed, installed, and maintained in accordance with ANSI Z9.2.

c. If air from exhaust ventilation is recirculated into the work place, the system shall have a high efficiency filter with reliable

back-up filter and controls to monitor the concentration of lead in the return air and to bypass the recirculation system automatically if it fails. Air may be recirculated only where exhaust to the outside is not feasible.

3.1.9 Personnel Protection

Item 3.1.9 will only be required in case of a positive initial determination according to Section 3.1.11 of this specification. Personnel shall wear and use protective clothing and equipment as specified herein. Eating, smoking, or drinking is not permitted in the lead control area. No one will be permitted in the lead control area unless they have been given appropriate training and protective equipment.

3.1.10 Warning Signs

Item 3.1.10 will only be required in case of a positive initial determination, according to Section 3.1.11 of this specification. Provide warning signs at approaches to lead control areas, if the exposure will be above the PEL. Locate signs at such distance that personnel may read the sign and take the necessary precautions before entering the area. Signs shall comply with the requirements of 29 CFR 1926.62.

3.1.11 Exposure Assessment

The Contractor shall comply with all provisions of 29 CFR 1926.62 (d). Until the Contractor performs an employee exposure assessment, the Contractor shall implement appropriate protective measures in accordance with 29 CFR 1926.62. See Appendix A of this specification for a table which lists applicable paragraphs of the standard that must be addressed during the exposure assessment. It also lists requirements for when exposures are above the action level, the permissible exposure level and at any level.

The personal protective clothing and controls shall be used as long as employee exposure is greater than the PEL. The CIH will be responsible for determining the exposure level and appropriate personal protective equipment.

3.1.12 Exposure Assessment Requirements

Until an exposure assessment has been performed, the Contractor shall provide the employees with the interim protection outlined in 29 CFR 1926.62.

The personal protective clothing, controls, and hygiene facilities shall be used as long as employee exposure is greater than the PEL.

3.1.13 Additional Exposure Assessment

After the initial exposure assessment, additional assessments shall be conducted whenever there has been a change of equipment, process, control, personnel, or a new task has been initiated.

3.2 WORK PROCEDURES

The Contractor shall perform demolition in accordance to the demolition work plan (Section 02050, and the written Compliance Plan (Section 1.5.3.3). Use procedures and equipment required to limit occupational and environmental exposure to lead when lead-containing paint material is

removed in accordance with 29 CFR 1926.62. Dispose of paint chips, demolition debris, and associated waste in compliance with federal, state, and local requirements.

3.2.1 Personnel Exiting Procedures

Whenever personnel exit the lead-controlled area, they shall perform the following procedures and shall not leave the work place wearing any clothing or equipment worn during the work day:

a. Vacuum themselves off using the HEPA vacuum.

b. Remove protective clothing in the decontamination room, and place them in an approved container.

c. Shower (if required by CIH).

d. Change to clean clothes prior to leaving the physical boundary designated around the lead-contaminated job site.

3.2.2 Monitoring

Monitoring of airborne concentration of lead shall be in accordance with 29 CFR 1926.62 and as specified herein. Air monitoring, testing and reporting shall be performed by a CIH or an Industrial Hygiene (IH) Technician who is under the direction of the CIH.

a. The CIH or the IH Technician under the direction of the CIH shall be on the job site directing the monitoring, and inspecting the work to ensure that the requirements of the Contract have been satisfied during the entire demolition operation.

b. Take personal air monitoring samples on employees who are anticipated to have the greatest risk of exposure as determined by the CIH. In addition, take air monitoring samples on at least 25 percent of the work crew or a minimum of two employees, whichever is greater, during each work shift.

c. Submit results of air monitoring samples, signed by the CIH, within 72 hours after the air samples are taken. Notify the Contracting Officer within 2 hours of exposure to lead at or in excess of the action level of 30 micrograms per cubic meter of air outside of the lead control area. Contractor must notify each employee in writing of the results which represent the employees exposure as per 29 CFR 1926.62.

3.2.2.1 Monitoring During Paint Disturbance

Perform personal and area monitoring during demolition activities as required by 29 CFR 1926.62. Sufficient area monitoring shall be conducted at the physical boundary to ensure unprotected personnel are not exposed above 30 micrograms per cubic meter of air at all times. If the outside boundary lead levels are at or exceed 30 micrograms per cubic meter of air, work shall be stopped and the CIH shall immediately correct the condition(s) causing the increased levels and notify the Contracting Officer immediately. The CIH shall review the sampling data collected on that day to determine if condition(s) requires any further change in work methods. Work shall resume when approval is given by the CIH. The contractor shall control the lead level outside of the work boundary to

less than 30 micrograms per cubic meter of air at all times. At least one sample on each shift shall be taken on the downwind side of the lead control area. If adjacent areas are contaminated, clean and visually inspect contaminated areas. The CIH shall certify that the area has been cleaned of lead contamination.

3.3 NOT USED

3.4 NOT USED

3.5 CLEANUP AND DISPOSAL

3.5.1 Cleanup

Maintain surfaces of the lead control area free of accumulations of paint chips and dust. Restrict the spread of dust and debris; keep waste from being distributed over the work area. Do not dry sweep or use compressed air to clean up the area.

3.5.2 Certification

The CIH shall certify the following in writing: air monitoring results are less than 30 micrograms per cubic meter inside and outside the lead control area, the respiratory protection for the employees was adequate, the work procedures were performed in accordance with 29 CFR 1926.62, and that there were no visible accumulations of lead-contaminated paint and dust at the worksite. Do not remove the lead control area or roped-off boundary and warning signs prior to the Contracting Officer's receipt of the CIH's certification. Reclean areas showing dust or residual paint chips.

3.5.3 Testing of Lead-Containing Paint Debris

Waste products shall be separated into the following categories:

a. Old woodwork, walls, roofing, plaster, windows, doors, concrete block debris, (all the debris associated with the demolition of the building).

b. Rags, sponges, mops, HEPA filters, air monitoring cartridges, scrapers, and other materials used for testing, and cleanup.

c. Disposable work clothes and respirator filters.

The waste produced by demolition (only aforementioned point a) has been determined to be non hazardous waste; therefore, testing is not required and may be disposed of as construction/demolition debris at an approved landfill located off Government property. The Contractor must evaluate, in accordance with 40 CFR 261 for hazardous waste, the waste described on points b. and c. to determine if they are hazardous. For initial pricing purposes, it will be assumed that the items described in b. and c. above are non-hazardous lead containing waste. If the Toxic Characteristic Leaching Procedure (TCLP) as required by 40 CFR 261 reveals that any times in b. or c. above as hazardous, an appropriate price adjustment will be negotiated in accordance with the Changes Clause.

Prior to initiation of the work and subsequent to final demolition and cleanup of the work site, soil testing will be performed to determine if the demolition project has contaminated the surface soils with lead. Remediation of contaminated soil resulting from the demolition is the sole

responsibility of the Contractor.

3.5.4 Disposal of Lead Contaminated Hazardous Waste

a. Collect lead-contaminated hazardous waste, scrap, debris, bags, containers, equipment, and lead-contaminated clothing which may produce airborne concentrations of lead particles. Label the containers in accordance with 49 CFR 172. Dispose of lead-contaminated waste material at an EPA permitted hazardous waste treatment, storage, or disposal facility off Government property.

b. Store waste materials in US Department of Transportation (49 CFR 178) approved 55-gallon drums. Properly label each drum to identify the type of waste (49 CFR 172) and the date the drum was filled. The Contracting Officer or an authorized representative will assign an area for interim storage of waste-containing drums. Do not store hazardous waste drums in interim storage longer than 90 calendar days from the date affixed to each drum.

c. Handle, store, transport, and dispose lead or lead-contaminated waste in accordance with 40 CFR 260, 40 CFR 261, 40 CFR 262, 40 CFR 263, 40 CFR 264, 40 CFR 265. Comply with land disposal restriction notification requirements as required by 40 CFR 268.

3.5.4.1 Disposal Documentation

Submit written evidence that the hazardous waste treatment, storage, or disposal facility (TSD) is approved for lead disposal by the EPA and state or local regulatory agencies. Submit one copy of the completed manifest, signed and dated by the initial transporter in accordance with 40 CFR 262.

3.5.5 Disposal of Lead Contaminated Non-Hazardous Waste

Any portion of the segregated waste products which does not test as hazardous by the testing requirements stated above, may be disposed at an approved landfill located off government property.

3.5.6 Payment for Hazardous Waste Disposal

Payment for disposal of hazardous waste will not be made until a signed copy of the manifest from the treatment or disposal facility certifying the amount of lead-containing materials delivered is returned and a copy is furnished to the Government.

-- End of Section --

SECTION 02120
TRANSPORTATION AND DISPOSAL OF HAZARDOUS MATERIALS

PART 1 GENERAL

1.1 REFERENCES

The publications listed below form a part of this specification to the extent referenced. The publications are referred to in the text by basic designation only.

CODE OF FEDERAL REGULATIONS (CFR)

40 CFR 61	National Emission Standards for Hazardous Air Pollutants
40 CFR 261	Identification and Listing of Hazardous Waste
40 CFR 262	Standards Applicable to Generators of Hazardous Waste
40 CFR 263	Standards Applicable to Transporters of Hazardous Waste
40 CFR 264	Standards for Owners and Operators of Hazardous Waste Treatment, Storage, and Disposal Facilities
40 CFR 265	Interim Status Standards for Owners and Operators of Hazardous Waste Treatment, Storage, and Disposal Facilities
40 CFR 266	Standards for the Management of Specific Hazardous Wastes and Specific Types of Hazardous Waste Management Facilities
40 CFR 268	Land Disposal Restrictions
40 CFR 270	EPA Administered Permit Programs: The Hazardous Waste Permit Program
40 CFR 300	National Oil and Hazardous Substances Pollution Contingency Plan
40 CFR 302	Designation, Reportable Quantities, and Notification
40 CFR 761	Polychlorinated Biphenyls (PCBs) Manufacturing, Processing, Distribution in Commerce, and Use Prohibitions
49 CFR 107	Hazardous Materials Program Procedures
49 CFR 172	Hazardous Materials Table, Special Provisions, Hazardous Materials

	Communications, Emergency Response Information, and Training Requirements
49 CFR 173	Shippers - General Requirements for Shipments and Packagings
49 CFR 178	Specifications for Packagings

1.2 SUBMITTALS

Government approval is required for submittals with a "GA" designation; submittals having an "FIO" designation are for information only. The following shall be submitted in accordance with Section 01330 SUBMITTAL PROCEDURES:

SD-1 Data

On-site Hazardous Waste Management; GA.
Off-site Hazardous Waste Management; GA.

Prior to start of work, a plan detailing the manner in which hazardous wastes shall be managed.

SD-09 Reports

Recordkeeping; GA.

Provide information necessary to file state annual or EPA biennial reports for all hazardous waste transported, treated, stored, or disposed of under this contract. The Contractor shall not forward these data directly to the regulatory agency but to the Contracting Officer at the specified time. The submittal shall contain all the information necessary for filing of the formal reports in the form and format required by the governing Federal or state regulatory agency. A cover letter shall accompany the data to include the contract number, Contractor name, and project location.

Spill Response; FIO.

In the event of a spill or release of a hazardous substance (as designated in 40 CFR 302), or pollutant or contaminant, or oil (as governed by the Oil Pollution Act (OPA), 33 U.S.C. 2701 et seq.), the Contractor shall notify the Contracting Officer immediately. If the spill exceeds a reporting threshold, the Contractor shall follow the pre-established procedures for immediate reporting to the Contracting Officer.

Exception Reports; GA.

In the event that a manifest copy documenting receipt of hazardous waste at the treatment, storage, and disposal facility is not received within 35 days of shipment initiation, the Contractor shall prepare and submit an exception report to the Contracting Officer within 37 days of shipment initiation.

SD-13 Certificates

Qualifications; FIO.

Copies of the current certificates of registration issued to the Contractor and/or subcontractors or written statements certifying exemption from these

requirements.

Off-Site Policy Compliance Certification; FIO.

A letter certifying that EPA considers the facilities to be used for all off-site disposal to be acceptable in accordance with the Off-Site policy in 40 CFR 300, Section .440. This certification shall be provided for wastes from Resource Conservation and Recovery Act (RCRA), 42 U.S.C. 6901 et seq., sites as well as from Comprehensive Environmental Response Compensation and Liability Act (CERCLA), 42 U.S.C. 9601 et seq., responses. See Attachment A sample certification at the end of this section.

Certificates of Disposal; FIO.

Certificates documenting the ultimate disposal of hazardous wastes, polychlorinated biphenyls (PCBs), and/or asbestos within 180 days of initial shipment. Receipt of these certificates will be required for final payment.

Packagings Certification; GA.

All transportation related shipping documents to the Contracting Officer, including draft hazardous waste manifests, draft land disposal restriction notifications, draft asbestos waste shipment records, draft manifests for PCBs, draft bill of ladings for hazardous materials, lists of corresponding proposed labels, packages, marks, and placards to be used for shipment, waste profiles, supporting waste analysis documents, for review a minimum of 14 days prior to anticipated pickup. Packaging assurances shall be furnished prior to transporting hazardous material; "generator copies" of hazardous waste manifests, land disposal restriction notifications, asbestos waste shipment records, "generator copies" of manifests used for initiating shipments of PCBs, bill of ladings, supporting waste analysis documents shall be furnished when shipments are originated; and "receipt copies" of asbestos waste shipment records at the designated disposal facility shall be furnished not later than 35 days after acceptance of the shipment.

SD-18 Records

Notices of Non-Compliance and Notices of Violation; FIO.

Notices of non-compliance or notices of violation by a Federal, state, or local regulatory agency issued to the Contractor in relation to any work performed under this contract. The Contractor shall immediately provide copies of such notices to the Contracting Officer. The Contractor shall also furnish all relevant documents regarding the incident and any information requested by the Contracting Officer, and shall coordinate its response to the notice with the Contracting Officer or his designated representative prior to submission to the notifying authority. The Contractor shall also furnish a copy to the Contracting Officer of all documents submitted to the regulatory authority, including the final reply to the notice, and all other materials, until the matter is resolved.

1.3 QUALIFICATIONS

1.3.1 Transportation and Disposal Coordinator

The Contractor shall designate, by position and title, one person to act as the Transportation and Disposal Coordinator (TDC) for this contract. The

TDC shall serve as the single point of contact for all environmental regulatory matters and shall have overall responsibility for total environmental compliance at the site including but not limited to accurate identification and classification of hazardous waste and hazardous materials; determination of proper shipping names; identification of marking, labeling, packaging and placarding requirements; completion of waste profiles, hazardous waste manifests, asbestos waste shipment records, PCB manifests, bill of ladings, exception and discrepancy reports; and all other environmental documentation. The TDC shall have, at a minimum, one year of specialized experience in the management and transportation of hazardous waste.

1.3.2 Training

The Contractor's hazardous materials employees shall be trained, tested, and certified to safely and effectively carry out their assigned duties. The Contractor's employees transporting hazardous materials or preparing hazardous materials for transportation shall be trained, tested, and certified in accordance with 49 CFR 172.

1.3.3 Certification

The Contractor and/or subcontractors transporting hazardous materials shall possess a current certificate of registration issued by the Research and Special Programs Administration (RSPA), U.S. Department of Transportation, when required by 49 CFR 107, Subpart G.

1.4 LAWS AND REGULATIONS REQUIREMENTS

Work shall meet or exceed the minimum requirements established by Federal, state, and local laws and regulations which are applicable. These requirements are amended frequently and the Contractor shall be responsible for complying with amendments as they become effective. In the event that compliance exceeds the scope of work or conflicts with specific requirements of the contract, the Contractor shall notify the Contracting Officer immediately.

1.5 DEFINITIONS

a. Hazardous Material. A substance or material which has been determined by the Secretary of Transportation to be capable of posing an unreasonable risk to health, safety, and property when transported in commerce, and which has been so designated pursuant to the Hazardous Materials Transportation Act, 49 U.S.C. Appendix Section 1801 et seq. The term includes materials designated as hazardous materials under the provisions of 49 CFR 172, Sections .101 and .102 and materials which meet the defining criteria for hazard classes and divisions in 49 CFR 173. EPA designated hazardous wastes are also hazardous materials.

b. Hazardous Waste. A waste which meets criteria established in RCRA or specified by the EPA in 40 CFR 261 or which has been designated as hazardous by a RCRA authorized state program.

PART 2 PRODUCTS

2.1 MATERIALS

The Contractor shall provide all of the materials required for the

packaging, labeling, marking, placarding and transportation of hazardous wastes and hazardous materials in conformance with Department of Transportation standards. Details in this specification shall not be construed as establishing the limits of the Contractor's responsibility.

2.1.1 Packagings

The Contractor shall provide bulk and non-bulk containers for packaging hazardous materials/wastes consistent with the authorizations referenced in the Hazardous Materials Table in 49 CFR 172, Section .101, Column 8. Bulk and non-bulk packaging shall meet the corresponding specifications in 49 CFR 173 referenced in the Hazardous Materials Table, 49 CFR 172, Section .101. Each packaging shall conform to the general packaging requirements of Subpart B of 49 CFR 173, to the requirements of 49 CFR 178 at the specified packing group performance level, to the requirements of special provisions of column 7 of the Hazardous Materials Table in 49 CFR 172, Section .101, and shall be compatible with the material to be packaged as required by 40 CFR 262. The Contractor shall also provide other packaging related materials such as materials used to cushion or fill voids in overpacked containers, etc. Sorbent materials shall not be capable of reacting dangerously with, being decomposed by, or being ignited by the hazardous materials being packaged. Additionally, sorbents used to treat free liquids to be disposed of in landfills shall be non-biodegradable as specified in 40 CFR 264, Section .314.

2.1.2 Markings

The Contractor shall provide markings for each hazardous material/waste package, freight container, and transport vehicle consistent with the requirements of 49 CFR 172, Subpart D and 40 CFR 262, Section .32 (for hazardous waste), 40 CFR 761, Section .45 (for PCBs), 40 CFR 61, Section .149(d)(for asbestos). Markings must be capable of withstanding, without deterioration or substantial color change, a 180 day exposure to conditions reasonably expected to be encountered during container storage and transportation.

2.1.3 Labeling

The Contractor shall provide primary and subsidiary labels for hazardous materials/wastes consistent with the requirements in the Hazardous Materials Table in 49 CFR 172, Section .101, Column 6. Labels shall meet design specifications required by 49 CFR 172, Subpart E including size, shape, color, printing, and symbol requirements. Labels shall be durable and weather resistant and capable of withstanding, without deterioration or substantial color change, a 180 day exposure to conditions reasonably expected to be encountered during container storage and transportation.

2.1.4 Placards

For each off-site shipment of hazardous material/waste, the Contractor shall provide primary and subsidiary placards consistent with the requirements of 49 CFR 172, Subpart F. Placards shall be provided for each side and each end of bulk packaging, freight containers, transport vehicles, and rail cars requiring such placarding. Placards may be plastic, metal, or other material capable of withstanding, without deterioration, a 30 day exposure to open weather conditions and shall meet design requirements specified in 49 CFR 172, Subpart F.

2.1.5 Spill Response Materials

The Contractor shall provide spill response materials including, but not limited to, containers, adsorbent, shovels, and personal protective equipment. Spill response materials shall be available at all times in which hazardous materials/wastes are being handled or transported. Spill response materials shall be compatible with the type of material being handled.

2.2 EQUIPMENT AND TOOLS

The Contractor shall provide miscellaneous equipment and tools necessary to handle hazardous materials and hazardous wastes in a safe and environmentally sound manner.

PART 3 EXECUTION

3.1 ON-SITE HAZARDOUS WASTE MANAGEMENT

These paragraphs apply to Government owned waste only. Contractors are prohibited by 10 U.S.C. 2692 from storing contractor owned waste on site for any length of time. The Contractor shall be responsible for ensuring compliance with all Federal, state, and local hazardous waste laws and regulations and shall verify those requirements when preparing reports, waste shipment records, hazardous waste manifests, or other documents. The Contractor shall identify hazardous wastes using criteria set forth in 40 CFR 261 or all applicable state and local laws, regulations, and ordinances. When accumulating hazardous waste on-site, the Contractor shall comply with generator requirements in 40 CFR 262 and any applicable state or local law or regulations. On-site accumulation times shall be restricted to applicable time frames referenced in 40 CFR 262, Section .34 and any applicable state or local law or regulation. Accumulation start dates shall commence when waste is first generated (i.e. containerized or otherwise collected for discard). The Contractor shall only use containers in good condition and compatible with the waste to be stored. The Contractor shall be responsible for ensuring containers are closed except when adding or removing waste. The Contractor shall be responsible for immediately marking all hazardous waste containers with the words "hazardous waste" and other information required by 40 CFR 262, Section .32 and any applicable state or local law or regulation] as soon as the waste is containerized. An additional marking shall be placed on containers of "unknowns" designating the date sampled, and the suspected hazard. The Contractor shall be responsible for inspecting containers for signs of deterioration and shall be responsible for responding to any spills or leaks. The Contractor shall inspect all hazardous waste areas weekly and shall provide written documentation of the inspection. Inspection logs will contain date and time of inspection, name of individual conducting the inspection, problems noted, and corrective actions taken.

3.1.1 Hazardous Waste Classification

The Contractor, in consultation with the Contracting Officer generator, shall identify all waste codes applicable to each hazardous waste stream based on requirements in 40 CFR 261 or any applicable state or local law or regulation. The Contractor shall also identify all applicable treatment standards in 40 CFR 268 and state land disposal restrictions and shall make a determination as to whether or not the waste meets or exceeds the standards. Waste profiles, analyses, classification and treatment standards information shall be submitted to Contracting Officer for review and approval.

3.1.2 Management Plan

The Contractor shall prepare a plan detailing the manner in which hazardous wastes shall be managed and describing the types and volumes of hazardous wastes anticipated to be managed as well as the management practices to be utilized. The plan shall identify the method to be used to ensure accurate piece counts and/or weights of shipments; shall identify waste minimization methods; shall propose facilities to be utilized for treatment, storage, and/or disposal; shall identify areas on-site where hazardous wastes are to be handled; shall identify whether transfer facilities are to be utilized; and if so, how the wastes will be tracked to ultimate disposal.

3.2 OFF-SITE HAZARDOUS WASTE MANAGEMENT

The Contractor shall use RCRA Subtitle C permitted facilities which meet the requirements of 40 CFR 264 or facilities operating under interim status which meet the requirements of 40 CFR 265. Off-site treatment, storage, and/or disposal facilities with significant RCRA violations or compliance problems (such as facilities known to be releasing hazardous constituents into ground water, surface water, soil, or air) shall not be used.

3.2.1 Description of TSD Facility and Transporter

The Contractor shall provide the Contracting Officer with EPA ID numbers, names, locations, and telephone numbers of TSD facilities and transporters. This information shall be contained in the Hazardous Waste Management Plan for approval prior to waste disposal.

3.2.2 Status of the Facility

Facilities receiving hazardous waste must be permitted in accordance with 40 CFR 270 or operating under interim status in accordance with 40 CFR 265 requirements or must be permitted by an authorized state program. Additionally, prior to using a TSD Facility, the Contractor shall contact the EPA Regional Off-site Coordinator specified in 40 CFR 300, Section .440, to determine the facility's status and document all information necessary to satisfy the requirements of the EPA Off-Site policy and furnish this information to the Contracting Officer.

3.2.3 Packagings Certification

Prior to shipment of any hazardous material off-site, the Contractor's TDC shall provide written certification to the Contracting Officer that hazardous materials have been properly packaged, labeled, and marked in accordance with Department of Transportation and EPA requirements.

3.2.4 Transportation

The Contractor shall use manifests for transporting hazardous wastes as required by 40 CFR 263 or any applicable state or local law or regulation. Transportation shall comply with all requirements in the Department of Transportation referenced regulations in the 49 CFR series. The Contractor shall acquire manifests in accordance with the hierarchy established in 40 CFR 262, Section .21. The Contractor shall prepare hazardous waste manifests for each shipment of hazardous waste shipped off-site. Manifests shall be completed using instructions in 40 CFR 262, Subpart B and any applicable state or local law or regulation. Manifests and waste profiles shall be submitted to Contracting Officer for review and approval. The

Contractor shall prepare land disposal restriction notifications as required by 40 CFR 268 or any applicable state or local law or regulation for each shipment of hazardous waste. Notifications shall be submitted with the manifest to the Contracting Officer for review and approval. When the additional cost of sending a qualified USACE representative to a remote location for a small clean up project is unwarranted, the option of requiring the on-site Contractor to sign the manifests on behalf of the generator is permitted and should be considered. This option shall only be exercised on a project specific basis, if prior to the solicitation process, written authorization of the customer and approval of the Chief, Construction Division at the executing district has been obtained, and the technical provisions of the contract solicitation provide competing contractors notice of the requirement.

3.2.5 Treatment and Disposal of Hazardous Wastes

The hazardous waste shall be transported to an approved hazardous waste treatment, storage, or disposal facility within 90 days of the accumulation start date on each container. The Contractor shall ship hazardous wastes only to facilities which are properly permitted to accept the hazardous waste or operating under interim status. The Contractor shall ensure wastes are treated to meet land disposal treatment standards in 40 CFR 268 prior to land disposal. The Contractor shall propose TSD facilities via submission of the Hazardous Waste Management Plan, subject to the approval of the Contracting Officer.

3.3 HAZARDOUS MATERIALS MANAGEMENT

The Contractor, in consultation with the Contracting Officer, shall evaluate prior to shipment of any material off-site whether the material is regulated as a hazardous waste in addition to being regulated as a hazardous material; this shall be done for the purpose of determining proper shipping descriptions, marking requirements, etcetera, as described below.

3.3.1 Identification of Proper Shipping Names

The Contractor shall use 49 CFR 172, Section .101 to identify proper shipping names for each hazardous material (including hazardous wastes) to be shipped off-site. Proper shipping names shall be submitted to the Contracting Officer in the form of draft shipping documents for review and approval.

3.3.2 Packaging, Labeling, and Marking

The Contractor shall package, label, and mark hazardous materials/wastes using the specified materials and in accordance with the referenced authorizations. The Contractor shall mark each container of hazardous waste of 440 L or less with the following:

"HAZARDOUS WASTE - Federal Law Prohibits Improper Disposal.
If found, contact the nearest police or public safety authority or the U.S. Environmental Protection Agency.
Generator's name _____
Manifest Document Number _____".

3.3.3 Shipping Documents

The Contractor shall ensure that each shipment of hazardous material sent

off-site is accompanied by properly completed shipping documents.

3.3.3.1 PCB Waste Shipment Documents

Should PCB materials be encountered, the Contractor shall prepare hazardous waste manifests for each shipment of PCB waste shipped off-site. Manifests will be completed using instructions in 40 CFR 761, Sections .207 and .208 and all other applicable requirements. Documents shall be submitted to Contracting Officer for review and approval.

3.3.3.2 Asbestos Waste Shipment Documents

The Contractor shall prepare waste shipment records as required by 40 CFR 61 for shipments of asbestos. Waste shipment records shall be submitted to the Contracting Officer for review and approval. Waste shipment records shall be signed by the Contractor.

3.3.3.3 Other Hazardous Material Shipment Documents

The Contractor shall prepare a bill of lading for each shipment of hazardous material which is not accompanied by a hazardous waste manifest or asbestos waste shipment record which fulfills the shipping paper requirements. The bill of lading shall satisfy the requirements of 49 CFR 172, Subpart C, and any applicable state or local law or regulation, and shall be submitted to the Contracting Officer for review and approval. For laboratory samples and treatability study samples, the Contractor shall prepare bills of lading and other documentation as necessary to satisfy conditions of the sample exclusions in 40 CFR 261, Section .4(d) and (e) and any applicable state or local law or regulation. Bill of ladings requiring shipper's certifications shall be signed by the Government.

3.4 OBTAINING EPA ID NUMBERS

The Contractor shall complete EPA Form 8700-12, Notification of Hazardous Waste Activity, and submit to the Contracting Officer for review and approval. The Contractor shall allow a minimum of 30 days for processing the application and assigning the EPA ID number. Shipment shall be made not earlier than one week after receipt of the EPA ID number.

3.5 SPECIAL REQUIREMENTS FOR ASBESTOS WASTES

If work involves asbestos containing wastes, the Contractor shall manage these wastes in accordance with specification Section 02080.

3.6 WASTE MINIMIZATION

The Contractor shall minimize the generation of hazardous waste to the maximum extent practicable. The Contractor shall take all necessary precautions to avoid mixing clean and contaminated wastes. The Contractor shall identify and evaluate recycling and reclamation options as alternatives to land disposal. Requirements of 40 CFR 266 shall apply to: hazardous wastes recycled in a manner constituting disposal; hazardous waste burned for energy recovery; lead-acid battery recycling; and hazardous wastes with economically recoverable precious metals.

3.7 RECORDKEEPING

The Contractor shall be responsible for maintaining adequate records to support information provided to the Contracting Officer regarding exception

reports, annual reports, and biennial reports. The Contractor shall be responsible for maintaining asbestos waste shipment records for a minimum of 3 years from the date of shipment or any longer period required by any applicable law or regulation or any other provision of this contract.

3.8 SPILL RESPONSE

The Contractor shall respond to any spill of hazardous materials or hazardous waste which are in the custody or care of the Contractor pursuant to this contract in accordance with the HAZMAT Plan for NFARS, Dec. 1997. Any direction from the Contracting Officer concerning a spill or release shall not be considered a change under the contract. The Contractor shall comply with all applicable requirements of Federal, state, or local laws or regulations regarding any spill incident. The Contractor is responsible for cleaning-up any spills caused by the Contractor or its agents to the satisfaction of the 914th AFRES Environmental Office. The 914th AW is responsible for the disposal of any spill waste generated during field operations, and the Contractor shall reimburse the 914th AW for disposal costs of such waste. The Contractor will maintain, at the sampling sites, spill equipment and materials sufficient to handle the containment and clean-up of spills in the capacity of the proposed projects. The Contractor must immediately report any and all spills or leaks to the 914th AFRES Fire Department at 911. In the event of a spill, the following information shall be reported:

- Description and amount of material spilled.
- Location of the spill (i.e. bldg. number, street name, room number, etc.)
- Name of person reporting the spill (with location and telephone number where they can be reached).
- How the spill occurred.
- The estimated time of the spill and the time the spill was discovered.
- What has been done to stop the spill and has any personnel been evacuated.
- What natural resources were effected. Did the spill effect any water resources or enter any storm or sanitary sewers?

3.9 EMERGENCY CONTACTS

The Contractor shall be responsible for complying with the emergency contact provisions in 49 CFR 172, Section .604. Whenever the Contractor ships hazardous materials, the Contractor shall provide a 24-hr emergency response contact and phone number of a person knowledgeable about the hazardous materials being shipped and who has comprehensive emergency response and incident mitigation information for that material, or has immediate access to a person who possesses such knowledge and information. The phone must be monitored on a 24-hour basis at all times when the hazardous materials are in transportation including during storage incidental to transportation. The Contractor shall ensure that information regarding this emergency contact and phone number are placed on all hazardous materials shipping documents. The Contractor shall designate an emergency coordinator and post the following information at areas in which hazardous wastes are managed:

a. The name of the emergency coordinator.

b. Phone number through which the emergency coordinator can be contacted on a 24 hour basis.

c. The telephone number of the local fire department.

d. The location of fire extinguishers and spill control materials.

Attachment A
SAMPLE OFF-SITE POLICY CERTIFICATION MEMO

Project/Contract #:_____
Waste Stream:_____
Primary TSD Facility, EPA ID # and Location: _____
Alter. TSD Facility, EPA ID # and Location:_____

EPA Region	Primary Contact	Secondary Contact
I	(617) 573-5755	(617) 573-1754
II	(212) 264-9504	(212) 264-2638
III	(215) 597-1857	(215) 597-8338
IV	(404) 347-7603	(404) 347-7603
V	(312) 353-7921	(312) 886-4445
VI	(214) 655-2282	(214) 655-2281
VII	(913) 551-7816	(913) 551-7667
VIII	(303) 293-1823	(303) 293-1506
IX	(415) 744-2129	(415) 744-2114
X	(206) 553-6646	(206) 553-1061

EPA representative contacted: _____
EPA representative phone number: _____
Date contacted: _____

Comment: _____
The above EPA representative was contacted on _____. As of that date the above sites were considered acceptable in accordance with the Off-Site Policy in 40 CFR 300.440.

Signature: _____ Date: _____
Phone number: _____

-- End of Section --

SECTION 02221

EXCAVATION, FILLING AND BACKFILLING FOR BUILDINGS

PART 1 GENERAL

1.1 REFERENCES

The publications listed below form a part of this specification to the extent referenced. The publications are referred to in the text by basic designation only.

AMERICAN SOCIETY FOR TESTING AND MATERIALS (ASTM)

ASTM D 1556	(1990) Density and Unit Weight of Soil in Place by the Sand-Cone Method
ASTM D 1557	(1991) Laboratory Compaction Characteristics of Soil Using Modified Effort (56,000 ft-lbf/cu. ft. (2,700 kN-m/cu.m.))
ASTM D 2167	(1994) Density and Unit Weight of Soil in Place by the Rubber Balloon Method
ASTM D 2216	(1992) Laboratory Determination of Water (Moisture) Content of Soil, and Rock
ASTM D 2487	(1993) Classification of Soils for Engineering Purposes (Unified Soil Classification System)
ASTM D 2922	(1991) Density of Soil and Soil-Aggregate in Place by Nuclear Methods (Shallow Depth)
ASTM D 2937	(1994) Density of Soil in Place by the Drive-Cylinder Method
ASTM D 3017	(1988; R 1993) Water Content of Soil and Rock in Place by Nuclear Methods (Shallow Depth)

1.2 DEFINITIONS

1.2.1 Degree of Compaction

Degree of compaction required is expressed as a percentage of the maximum density obtained by the test procedure presented in ASTM D 1557abbreviated hereinafter as percent laboratory maximum density.

1.3 SUBMITTALS

Government approval is required for submittals with a "GA" designation; submittals having an "FIO" designation are for information only. The following shall be submitted in accordance with Section 01330 SUBMITTAL PROCEDURES:

SD-09 Reports

Field Density Tests; FIO. Testing of Backfill Materials; FIO.

Copies of all laboratory and field test reports within 24 hours of the completion of the test.

PART 2 PRODUCTS

2.1 MATERIALS

2.1.1 Satisfactory Materials

Satisfactory materials include materials classified in ASTM D 2487 as GW, GP, GC, GM, SP, SM, CL, and SW, and shall be free of trash, debris, roots or other organic matter, or stones larger than 75 mm in any dimension.

2.1.2 Unsatisfactory Materials

Unsatisfactory materials shall be materials that do not comply with the requirements for satisfactory materials. Unsatisfactory materials include materials classified in ASTM D 2487 as Pt, MH, CH, ML, SC, OH, and OL, any other materials not defined as satisfactory. Unsatisfactory materials also include man-made fill, refuse, or backfilling from previous construction.

2.1.3 Cohesionless and Cohesive Materials

Cohesionless materials include materials classified in ASTM D 2487 as GW, GP, SW, and SP. Cohesive materials include materials classified as GC, SC, ML, CL, MH, and CH. Materials classified as GM and SM will be identified as cohesionless only when the fines are nonplastic.

2.2 CAPILLARY WATER BARRIER

Capillary Water Barrier shall consist of clean, crushed, nonporous rock, crushed gravel, or uncrushed gravel. The maximum particle size shall be 37.5 mm and no more than 2 percent by weight shall pass the 4.75 mm size sieve.

PART 3 EXECUTION

3.1 CLEARING AND GRUBBING

The areas within lines 1.5 m outside of each building and structure line shall be cleared and grubbed of trees, stumps, roots, brush and other vegetation, debris, existing foundations, pavements, utility lines, structures, fences, and other items that would interfere with construction operations. Stumps, logs, roots, and other organic matter shall be completely removed and the resulting depressions shall be filled with satisfactory material, placed and compacted in accordance with paragraph FILLING AND BACKFILLING. Materials removed shall be disposed of outside the limits of Government-controlled property at the Contractor's responsibility.

3.2 TOPSOIL

Topsoil shall be stripped to a minimum depth of 150 millimeters below existing grade within the designated excavations and grading lines and

deposited in storage piles for later use. Excess topsoil shall be disposed as specified for excess excavated material.

3.3 EXCAVATION

Excavation shall conform to the dimensions and elevations indicated for each building, structure, and footing except as specified hereinafter, and shall include trenching for utility and foundation drainage systems to a point 1.5 m beyond the building line of each building and structure, excavation for outside grease interceptors, underground fuel tanks, and all work incidental thereto. Excavation shall extend a sufficient distance from walls and footings to allow for placing and removal of forms. Excavations below indicated depths will not be permitted except to remove unsatisfactory material. Unsatisfactory material encountered below the grades shown shall be removed as directed and replaced with satisfactory material. Satisfactory material removed below the depths indicated without specific direction of the Contracting Officer shall be replaced at no additional cost to the Government to the indicated excavation grade with satisfactory materials, except that concrete footings shall be increased in thickness to the bottom of the overdepth excavations and over-break in rock excavation. Satisfactory material shall be placed and compacted as specified in paragraph FILLING AND BACKFILLING. Determination of elevations and measurements of approved overdepth excavation of unsatisfactory material below grades indicated shall be done under the direction of the Contracting Officer.

3.4 DRAINAGE AND DEWATERING

3.4.1 Drainage

Surface water shall be directed away from excavation and construction sites so as to prevent erosion and undermining of foundations. Diversion ditches, dikes and grading shall be provided and maintained as necessary during construction. Excavated slopes and backfill surfaces shall be protected to prevent erosion and sloughing. Excavation shall be performed so that the site and the area immediately surrounding the site and affecting operations at the site shall be continually and effectively drained.

3.4.2 Dewatering

Groundwater flowing toward or into excavations shall be controlled to prevent sloughing of excavation slopes and walls, boils, uplift and heave in the excavation and to eliminate interference with orderly progress of construction. French drains, sumps, ditches or trenches will not be permitted within 900 mm of the foundation of any structure, except with specific written approval, and after specific contractual provisions for restoration of the foundation area have been made. Control measures shall be taken by the time the excavation reaches the water level in order to maintain the integrity of the in situ material. While the excavation is open, the water level shall be maintained continuously, at least 0.6 meters below the working level.

3.5 SHORING

Shoring, including sheet piling, shall be furnished and installed as necessary to protect workmen, banks, adjacent paving, structures, and utilities. Shoring, bracing, and sheeting shall be removed as excavations are backfilled, in a manner to prevent caving.

3.6 CLASSIFICATION OF EXCAVATION

Excavation will be unclassified regardless of the nature of material encountered.

3.7 BLASTING

Blasting will not be permitted.

3.8 UTILITY AND DRAIN TRENCHES

Trenches for underground utilities systems and drain lines shall be excavated to the required alignments and depths. The bottoms of trenches shall be graded to secure the required slope and shall be tamped if necessary to provide a firm pipe bed. Recesses shall be excavated to accommodate bells and joints so that pipe will be uniformly supported for the entire length. Rock, where encountered, shall be excavated to a depth of at least 150 mm below the bottom of the pipe, and the overdepth shall be backfilled with satisfactory material placed and compacted in conformance with paragraph FILLING AND BACKFILLING.

3.9 BORROW

Where satisfactory materials are not available in sufficient quantity from required excavations, approved materials shall be obtained as specified in Section 02225 EARTHWORK FOR ROADWAYS, RAILROADS AND AIRFIELDS.

3.10 EXCAVATED MATERIALS

Satisfactory excavated material required for fill or backfill shall be placed in the proper section of the permanent work required under this section or shall be separately stockpiled if it cannot be readily placed following applicable erosion and sediment control measures. Satisfactory material in excess of that required for the permanent work and all unsatisfactory material shall be disposed of as specified in Section 02225 EARTHWORK FOR ROADWAYS, RAILROADS AND AIRFIELDS.

3.11 FINAL GRADE OF SURFACES TO SUPPORT CONCRETE

Excavation to final grade shall not be made until just before concrete is to be placed. Only excavation methods that will leave the foundation rock in a solid and unshattered condition shall be used. Approximately level surfaces shall be roughened, and sloped surfaces shall be cut as indicated into rough steps or benches to provide a satisfactory bond. Shales shall be protected from slaking or other erosion resulting from ponding or flow of water.

3.12 SUBGRADE PREPARATION

Unsatisfactory material in surfaces to receive fill or in excavated areas shall be removed and replaced with satisfactory materials. The surface shall be scarified to a depth of 150 mm before the fill is started. Sloped surfaces steeper than 1 vertical to 4 horizontal shall be plowed, stepped, benched, or broken up so that the fill material will bond with the existing material. When subgrades are less than the specified density, the ground surface shall be broken up to a minimum depth of 150 mm, pulverized, and compacted to the specified density. When the subgrade is part fill and part excavation or natural ground, the excavated or natural

ground portion shall be scarified to a depth of 300 mm and compacted as specified for the adjacent fill. Material shall not be placed on surfaces that are muddy, frozen, or contain frost. Compaction shall be accomplished by sheepsfoot rollers, pneumatic-tired rollers, steel-wheeled rollers, or other approved equipment well suited to the soil being compacted. Material shall be moistened or aerated as necessary to provide the moisture content that will readily facilitate obtaining the specified compaction with the equipment used. Minimum subgrade density shall be as specified in paragraph FILLING AND BACKFILLING.

3.13 FILLING AND BACKFILLING

Satisfactory materials shall be used in bringing fills and backfills to the lines and grades indicated and for replacing unsatisfactory materials. Satisfactory materials shall be placed in horizontal layers not exceeding 200 mm in loose thickness, or 150 mm when hand-operated compactors are used. After placing, each layer shall be plowed, disked, or otherwise broken up, moistened or aerated as necessary, thoroughly mixed and compacted as specified. Backfilling shall not begin until construction below finish grade has been approved, underground utilities systems have been inspected, tested and approved, forms removed, and the excavation cleaned of trash and debris. Backfill shall be brought to indicated finish grade and shall include backfill for outside grease interceptors and underground fuel tanks. Backfill shall not be placed in wet or frozen areas. Where pipe is coated or wrapped for protection against corrosion, the backfill material up to an elevation 600 mm above sewer lines and 300 mm above other utility lines shall be free from stones larger than 25.4 mm in any dimension. Heavy equipment for spreading and compacting backfill shall not be operated closer to foundation or retaining walls than a distance equal to the height of backfill above the top of footing; the area remaining shall be compacted in layers not more than 100 mm in compacted thickness with power-driven hand tampers suitable for the material being compacted. Backfill shall be placed carefully around pipes or tanks to avoid damage to coatings, wrappings, or tanks. Backfill shall not be placed against foundation walls prior to 7 days after completion of the walls. As far as practicable, backfill shall be brought up evenly on each side of the wall and sloped to drain away from the wall. Each layer of fill and backfill shall be compacted to not less than the percentage of maximum density specified below:

	Percent Laboratory maximum density	
	Cohesive material	Cohesionless material
Fill, embankment, and backfill		
Under structures, building slabs, steps, paved areas, around footings, and in trenches	90	95
Under sidewalks and grassed areas	85	90
Subgrade		

	Percent Laboratory maximum density	
	Cohesive material	Cohesionless material
Under building slabs, steps, and paved areas, top 300 mm	90	95
Under sidewalks, top 150 mm	85	90

Approved compacted subgrades that are disturbed by the Contractor's operations or adverse weather shall be scarified and compacted as specified herein before to the required density prior to further construction thereon. Recompaction over underground utilities and heating lines shall be by hand tamping.

3.14 TESTING

Testing shall be the responsibility of the Contractor and shall be performed at no additional cost to the Government. Testing shall be performed by an approved commercial testing laboratory or may be performed by the Contractor subject to approval. Field in-place density shall be determined in accordance with ASTM D 1556, ASTM D 2167, or ASTM D 2922. When ASTM D 2922 is used, the calibration curves shall be checked and adjusted if necessary by the procedure described in ASTM D 2922, paragraph ADJUSTING CALIBRATION CURVE. ASTM D 2922 results in a wet unit weight of soil and when using this method ASTM D 3017 shall be used to determine the moisture content of the soil. The calibration curves furnished with the moisture gauges shall also be checked along with density calibration checks as described in ASTM D 3017. The calibration checks of both the density and moisture gauges shall be made at the beginning of a job on each different type of material encountered and at intervals as directed by the Contracting Officer. ASTM D 2937 shall be used only for soft, fine-grained, cohesive soils. The following number of tests, if performed at the appropriate time, shall be the minimum acceptable for each type operation.

3.14.1 In-Place Densities

3.14.1.1 In-Place Density of Subgrades

One test per 200 square meters or fraction thereof.

3.14.1.2 In-Place Density of Fills and Backfills

One test per 200 square meters or fraction thereof of each lift for fill or backfill areas compacted by other than hand or hand-operated machines. The density for each lift of fill or backfill materials for trenches, pits, building perimeters or other structures or areas less than 30 meters in width, which are compacted with hand or hand-operated machines shall be tested as follows: One test per each area less than 200 square meters, or one test for each 30 linear meter of long narrow fills 90 meters or more in length. If ASTM D 2922 is used, in-place densities shall be checked by ASTM D 1556 as follows: One check per lift for each 90 linear meters of long narrow fills, and a minimum of 2 checks per lift for other fill and

backfill areas.

3.14.2 Moisture Content

In the stockpile, excavation or borrow areas, a minimum of two tests per day per type of material or source of materials being placed is required during stable weather conditions. During unstable weather, tests shall be made as dictated by local conditions and approved moisture content shall be tested in accordance with ASTM D 2216.

3.14.3 Optimum Moisture and Laboratory Maximum Density

Tests shall be made for each type material or source of material including borrow material to determine the optimum moisture and laboratory maximum density values. One representative test per 200 cubic meters of fill and backfill, or when any change in material occurs which may affect the optimum moisture content or laboratory maximum density will be made.

3.15 CAPILLARY WATER BARRIER

Capillary water barrier under concrete floor and area-way slabs on grade shall be placed directly on the subgrade and shall be compacted with a minimum of two passes of a hand-operated plate-type vibratory compactor.

3.16 GRADING

Areas within 1.5 m outside of building and structure line shall be constructed true-to-grade, shaped to drain, and shall be maintained free of trash and debris until final inspection has been completed and the work has been accepted.

3.17 SPREADING TOPSOIL

Areas outside the building lines from which topsoil has been removed shall be topsoiled. The surface shall be free of materials that would hinder planting or maintenance operations. The subgrade shall be pulverized to a depth of 50 mm by disking or plowing for the bonding of topsoil with the subsoil. Topsoil shall then be uniformly spread, graded, and compacted to the thickness, elevations, slopes shown, and left free of surface irregularities. Topsoil shall be compacted by one pass of a cultipacker, roller, or other approved equipment weighing 1.46 kN/m to 2.34 kN/m of roller. Topsoil shall not be placed when the subgrade is frozen, excessively wet, extremely dry, or in a condition otherwise detrimental to seeding, planting, or proper grading.

3.18 PROTECTION

Settlement or washing that occurs in graded, topsoiled, or backfilled areas prior to acceptance of the work shall be repaired and grades reestablished to the required elevations and slopes.

-- End of Section --

Environmental
Geotechnical
Construction
Consulting • Engineering • Testing

February 3, 1999

Mr. Farid Mohsoni, P.E.
Mason and Hanger Engineering, Inc.
2355 Harrodsburg Road
Lexington, Kentucky 40504

Re: Addendum
Report of Subsurface Exploration
Consolidated Maintenance Facility
Niagara Falls Air Reserve Station
Wagner Drive
Niagara Falls, New York
PSI Project No: 806-85046

Dear Mr. Mohsoni,

As per our conversation of February 2, 1999, please be advised that the maximum allowable soil bearing capacity based on dead load plus design live load for spread footings for building columns and continuous footings for bearing walls may be increased to ninety-six (96) kilopascals.

Total and differential settlements for the recommended foundation systems of less than twenty-five (25) millimeters and nineteen (19) millimeters between columns and adjacent walls are still expected.

Should you have any questions or need further clarifications regarding this matter feel free to contact me.

Very truly yours,
PROFESSIONAL SERVICE INDUSTRIES, INC.

David B. Sabol, P.E.
Branch Manager

REPORT OF SUBSURFACE EXPLORATION

for the

CONSOLIDATED MAINTENANCE FACILITY
WAGNER DRIVE
NIAGARA FALLS, NEW YORK

prepared for

MASON AND HANGER ENGINEERING, INC.
2355 HARRODSBURG ROAD
LEXINGTON, KENTUCKY 40504

PSI PROJECT NO. 806-85046

NOVEMBER 10, 1998

TABLE OF CONTENTS

	Page No.
Executive Summary	1
PROJECT INFORMATION	
Project Authorization	2
Project Description	2
Purpose and Scope of Services	2
TESTING PROCEDURES	
Field Operations	3
Laboratory Testing	3
SITE AND SUBSURFACE CONDITIONS	
Site Description and Topography	4
Site Geology	4
Subsurface Conditions	4
Ground Water Conditions	5
EVALUATION AND RECOMMENDATIONS	
Foundation Selection Criteria	5
Site Preparation	6
Foundations	7
Floor Slab-on-Grade	8
Pavements	8
CONSTRUCTION CONSIDERATIONS	
Excavations	9
Drainage & Groundwater Considerations	10
Weather Considerations	10
REPORT LIMITATIONS	11
APPENDIX I - MAPS	
Boring Location Plans	
APPENDIX II- SUBSURFACE MATERIALS	
General Notes	
Boring Logs (B-1 to B-7)	
Analytical Test Results	

Subsurface Exploration
Consolidated Maintenance Facility
Niagara Falls Air Reserve Base
Wagner Drive
Niagara Falls, New York
PSI Project No. 806-85046

EXECUTIVE SUMMARY

An exploration and evaluation of the subsurface conditions have been performed at the site of the proposed Consolidated Maintenance Facility to be located approximately fifty (50) meters southeast of the intersection of Wagner Drive within the Niagara Falls Air Reserve Station in Wheatfield, Niagara County, New York. Test borings have been drilled and selected soil samples tested in the laboratory. In general the subsurface conditions within the proposed building area consisted of an approximate fifty-two (52) to one hundred fifty-eight (158)-millimeter thick topsoil mantle overlaying brown silty clay with varying fractions of sand and gravel followed by very soft to soft clay. Groundwater was encountered at depths ranging from approximately five and three-tenths (5.3) to six (6.0) meters below the existing site grades in borings B-1, B-4 and B-5. Groundwater was not encountered in the remaining borings.

Building Foundations

The results of this exploration indicate that the soils at the site are suitable for use of shallow foundations for building support. Strip footings for columns and continuous wall footings bearing on natural soils or engineered fill may be designed for a maximum allowable soil bearing capacity of eighty-three (83) kilopascals. It is also estimated that up to six-tenths (0.6) meter of cut/fill operations within the footprint of the proposed building addition will be necessary to achieve final grade.

Site Preparation

After removal of the asphaltic concrete and stone base and any soft or wet soils, the exposed subgrade should be rolled and compacted with a vibratory roller prior to being proofrolled with a tandem-axled dump truck prior to fill placement. All structural fill should be placed in two hundred (200)-millimeter loose lifts and compacted to ninety-five (95) percent of the material's maximum dry density per ASTM D-1557. The on-site soils are sensitive to moisture variations. Every effort should be made to maintain a dry working environment. Adequate surface drainage should be provided to prevent saturation of subsoils.

Details related to foundation design criteria and guide construction considerations are included in subsequent sections of this report. PSI cannot be responsible for the interpretation or implementation of this report by others. PSI should be retained to perform construction observation and testing services sufficient to determine compliance with these recommendations.

The owner/designer should not rely solely upon this executive summary and **must** read and evaluate the entire contents of this report prior to utilizing PSI's engineering recommendations in the preparation of design and construction documents.

PROJECT INFORMATION

Project Authorization

PSI has completed a subsurface exploration for the proposed Consolidated Maintenance Facility to be located approximately fifty (50) meters southeast of the intersection of Wagner Drive and Ent Avenue within the Niagara Falls Air Reserve Station in Wheatfield, Niagara County, New York. PSI's services were performed in accordance with PSI proposal number 806-194, dated August 17, 1998. Authorization to perform this exploration and analysis was in the form of a letter agreement, dated October 21, 1998, from Mason and Hanger Engineering to Professional Service Industries, Inc..

Project Description

The structural information regarding the proposed building was provided by Mr. Larry Gass of Mason and Hanger Engineering, Inc.. It is understood that the building is to have an approximate plan area of 1,700 square meters having maximum plan dimensions of fifty-three (53) meters by thirty-five (35) meters. An asphaltic concrete parking area is also planned. The new construction will consist of a single story, steel frame, slab-on-grade structure with a light gauge metal skin with some exterior masonry. The roof system will be standing seam metal. The structure's maximum column and wall loads are expected to be one (1) meganewton and 5209 kilograms per lineal meter, respectively. The maximum floor slab load for the structure is anticipated to be one (1) megapascal.

A grading plan for the site has not been furnished; however, based upon the topography of the site and surrounding properties, it is expected that cut and fill sections within the footprint of the building will reach about six-tenths (0.6) meter to achieve the final grades.

The site plan provided with this report was photocopied from plans provided by Mason and Hanger Engineering, Inc.. The recommendations provided in this report are based on the information presented in this section. If any of this information should change or be incorrect, PSI should be notified immediately so that the recommendations presented in this report may be reviewed and revised as necessary.

Purpose and Scope of Services

The purpose of subsurface exploration was to determine the various soil profile components, to establish the engineering characteristics of the foundation materials and to provide criteria for use by the design engineers and architects in preparing the foundation design for the proposed structures.

The scope of the exploration and analysis included a reconnaissance of the immediate site, review of geological maps, completion of six (6) test borings, completion of two (2) environmental borings, field and laboratory testing, and an engineering analysis and evaluation of the subsurface materials encountered.

The scope of services did not include any environmental assessment for the presence or absence of wetlands or hazardous or toxic materials in the soil, surface water, ground water or air, on, or below or around this site. Any statements in this report or on the boring logs regarding odors, colors, unusual or suspicious items or conditions are strictly for the information of the client. Prior to purchase or development of this site, completion of an environmental assessment is advisable.

TESTING PROCEDURES

Field Operations

Six (6) soil test borings and two (2) environmental borings were performed at the site at the approximate positions indicated on the Boring Location Plans included in the Appendix. The boring positions and depths were chosen by both Professional Service Industries, Inc. and Mason and Hanger Engineering, Inc.. All borings were staked or marked by Mason and Hanger Engineering, Inc. in the field prior to the arrival of the PSI drilling crew. Ground surface elevations shown on the boring records were also provided by Mason and Hanger Engineering, Inc..

The split-spoon sampling procedures used during this exploration were carried out in general accordance with ASTM Designation D-1586. The boring records, which include soil descriptions, stratifications, penetration resistances and locations of the samples are included in the Appendix. Water level information obtained after completion of drilling is also shown on these records. The stratification lines shown on the boring records represent the soil conditions at the actual boring locations. Variations may occur between the borings. Lines of demarcation represent the approximate boundary between the soil types; however, the transition may be gradual, abrupt, or not clearly defined.

Laboratory Testing

The soil samples recovered during the field exploration were transported to the laboratory and examined. The samples were visually classified, and representative samples of the subsurface soils were tested in the laboratory. The laboratory analyses included determining the natural moisture content of all soil samples. Selected samples were also subjected to Atterberg limits tests and unconfined compression tests utilizing a calibrated spring loaded hand penetrometer. All test procedures were carried out in general accordance with applicable ASTM Designations.

The laboratory test results are shown on the boring records. Those samples which were not altered by laboratory testing will be retained at PSI's office for a period of sixty (60) days from the date of this report and then discarded, unless other arrangements are made.

SITE AND SUBSURFACE CONDITIONS

Site Description and Topography

The proposed Consolidated Maintenance Facility is to be located approximately fifty (50) meters southeast of the intersection of Wagner Drive and Ent Avenue within the Niagara Falls Air Reserve Station in Wheatfield, Niagara County, New York. The site for the proposed building and parking area currently supports a grass cover. Surrounding properties consist of Building 810 to the east, the two lane asphaltic concrete Wagner Drive to the north, and grass areas to the immediate south and west.

The site is fairly level with elevational differences within the proposed project area estimated to be six-tenths (0.6) meter or less. Ponded water was not observed at the time of drilling operations. During the field operations, the drill rig experienced little difficulty traversing the project areas. The Boring Location Plan in the Appendix indicates the location of the structure with respect to Wagner Drive. Some underground utilities consisting of communication lines were observed within the limits of the property.

Site Geology

The Wheatfield, New York area is located within the glaciated portion of the Erie-Ontario lowlands physiographic province. Bedrock in the general site area is part of the Upper Silurian are Lockport Group, which mainly consist of relatively flat-lying Goat Island Dolostones and Gasport Limestones. The main development of preglacial landscape development is physiographic feature, limestone escarpments, saprolites and partly buried stream networks. Generally, bedrock is present at fairly shallow depths. Surface soils in the area generally consist of variably textured glacial tills.

Subsurface Conditions

At the boring locations, the site area supports a topsoil cover having an approximate thickness ranging from fifty-two (52) to one hundred fifty-eight (158) millimeters. The thicknesses of the surficial materials may vary significantly between the boring positions.

At all boring locations underlying the topsoil cover, silty clay with varying fractions of sand gravel and/or sandy silt was encountered to approximate depths ranging from four (4) to five and one-half (5.5) meters below the existing surface grades. Standard Penetration resistance, N-values, within these soils range from fourteen (14) to twenty-nine (29) blows per three

hundred (300) millimeters, indicating consistences ranging from stiff to very stiff. Moisture contents of these soils ranged from fourteen (14) to twenty-nine (29) percent.

Underlying the silty clay with varying fractions of sand gravel and/or sandy silt, clay was encountered to the borings' termination depth of approximately six (6) meters below the existing surface grades. Standard Penetration resistance, N-values, within these soils range from three (3) to ten (10) blows per three hundred (300) millimeters, indicating very soft to medium stiff consistencies. Moisture contents of these soils ranged from twenty-one (21) to thirty-five (35) percent.

Even though cobbles and boulders were not encountered during the soil boring operations, it is possible that they may be encountered during the foundation construction because of the depositional processes associated with glacial soils.

The above subsurface descriptions are of a generalized nature, and are provided to highlight the major soil strata encountered. The records of subsurface exploration included in the appendix should be reviewed for specific information as to the individual boring locations. The stratifications shown on the records of subsurface exploration represent the conditions only at the actual boring locations. Variations may occur and should be expected between the boring locations. The stratifications represent the approximate boundary between subsurface materials. The actual transition may be gradual, abrupt, or not clearly defined.

Groundwater Conditions

Groundwater was encountered at approximate depths ranging from five and three-tenths (5.3) to six (6) meters below the existing site grades in borings B-1, B-4 and B-5. Groundwater was not encountered in the remaining borings.

The groundwater levels presented in this report represent levels measured at the time of the field activities. Fluctuation should be anticipated. It is recommended that the contractor establish the actual groundwater levels at the time of the construction to evaluate groundwater impact on construction procedures.

EVALUATION AND RECOMMENDATIONS

Foundation Selection Criteria

The type and depth of foundation suitable for a given structure primarily depends on several factors, including the subsurface conditions, the function of the structure, the loads it may carry and the cost of the foundation. Additional considerations may include acceptable performance criteria set by the owner, architect, or structural designer with respect to vertical and differential movements which the structure can withstand without damage.

The design considerations affecting the choice of foundation type for this site, based on a review of the boring information and engineering characteristics determined by the laboratory test results, are summarized as follows:

- The consistencies of the upperlying soils ranged from stiff to very stiff.
- The consistencies of the soils at the five (5) to six (6) meter depth ranged from very soft to medium stiff.
- Within the footprint of the building, it is expected that cutting and filling will be expected to be up to six-tenths (0.6) meters to achieve the final design grades.
- Maximum column and wall loads are expected to be one (1) meganewton and 5209 kilograms per lineal meter, respectively.
- Total and differential settlements for the recommended foundation systems of less than twenty-five (25) millimeters and nineteen (19) millimeters between columns and adjacent walls are assumed to be acceptable.

Based on the various conditions discussed previously, it is recommended that shallow foundations be utilized for the support of the proposed structure. The foundation recommendations presented in the report will be valid only if the site preparation and grading are performed in accordance with the following "Site Preparation" section.

Site Preparation

To prepare for construction, it is recommended that all topsoil, and any soft, wet or loose soils in the building and parking areas be stripped from the site and either wasted or stockpiled for later use in landscaping. The depth of removal should be determined by a representative of the geotechnical engineer at the time of construction. Any existing utilities in the construction areas should be located and rerouted, as necessary. The depth of topsoil within the borings ranged from approximately fifty-two (52) to one hundred fifty-eight (158) millimeters; however, it is possible that these depths may vary at other locations within the project area.

After stripping and excavating to the proposed subgrade level as required, the building and parking areas should be proofrolled with a fully loaded tandem-axled dump truck or similar equipment providing equivalent subgrade loading. Soils which are observed to rut or deflect excessively during proofrolling should be undercut and replaced with properly compacted fill. All proofrolling and undercutting activities should be witnessed by a representative of the geotechnical engineer and should be performed during a period of dry weather. The uppermost three hundred (300) millimeters of the subgrade should be compacted to a dry density of at least ninety-five (95) percent of the maximum laboratory dry density as determined in accordance with ASTM standard method D-1557. Aeration of the subgrade surface soils will probably be required.

After subgrade preparation and observation have been completed, fill placement may begin. Fill materials should be free of organic contamination or other deleterious materials, have a maximum particle size of seventy-five (75) millimeters, and have a liquid limit of less than thirty (30) and plasticity index of less than fifteen (15). The non-deleterious on-site soils should be suitable for use as structural fill provided their moisture contents are brought within the values recommended later in this section. If a fine-grained soil is used for fill, very close moisture content control will be required to achieve the recommended degree of compaction.

Structural fill should be compacted to at least ninety-five (95) percent of the maximum dry density as determined in accordance with ASTM standard method D-1557 (modified Proctor).

Fill should be placed in lifts not exceeding two hundred (200) millimeters in loose thickness, and should be conditioned to within plus or minus two (2) percent of the optimum moisture content value as determined per ASTM D-1557. If water must be added, it should be uniformly applied and thoroughly mixed in to the soil by discing or scarifying. Each completed lift of fill should be protected from drying as well. Each lift of compacted engineered fill should be tested by the geotechnical engineer or his representative prior to placement of subsequent lifts.

It is recommended that PSI be retained to provide observation and testing of construction activities involved in the foundation, earthwork, and related activities of this project.

Footing Foundation System

Spread footings for building columns and continuous footings for bearing walls should be proportioned for a maximum allowable soil bearing capacity of eighty-three (83) kilopascals based on dead load plus design live load. Interior footings, in heated areas, to be supported on engineered fill or natural soils should be placed at least four hundred fifty (450) millimeters below the finished floor grade. Exterior footings, and footings in unheated areas, should be placed on natural soils or engineered fill at least one and two-tenths (1.2) meters below the final exterior grades for frost protection. Minimum foundation widths for column and strip footings should be six hundred (600) millimeters and four hundred fifty (450) millimeters, respectively, even if the bearing pressures are less than the recommended values.

All foundation excavations should be observed by a representative of PSI prior to steel or concrete placement to assess that the foundation materials are capable of supporting the design loads. Soft or loose soil zones encountered at the bottom of the footing excavations should be removed and the footing extended to bear on underlying higher strength soils, as directed by the geotechnical engineer. Cavities formed as a result of the excavation of soft or loose soil zones should be backfilled with engineered fill and/or lean concrete.

Concrete should be placed in the footings as soon as possible after the excavations are made. Care should be taken during the excavation for the foundation to avoid disturbance of the bearing surface materials. Also, extreme care should be taken to prevent softening of the foundation bearing surfaces due to exposure, construction activity disturbance, or an increase in moisture content due to inundation. In order to minimize the potential effects of any minor

differential movements which may occur due to variations in the character of the supporting soils or due to seasonal variations in soil moisture contents, it is recommended that all continuous footings be suitably reinforced, as per structural considerations.

Floor Slab-on-Grade

Care must be taken to be sure that all excavations for foundations are properly backfilled with suitable materials, compacted in accordance with the procedures outlined above. Before backfill is placed, all water and loose debris should be removed from these excavations and subgrades proofrolled with a tandem-axled truck, and any areas exhibiting pumping or deflection are to be stabilized prior to the floor construction.

A free-draining granular mat having a minimum thickness of one hundred (100) millimeters should be provided below the floor slabs. An impervious membrane should be used as a vapor barrier beneath the slab. Such membranes, however, occasionally cause "curling" of slab segments due to differential drying shrinkage. A seventy-five (75)-millimeter layer of manufactured sand or run of crusher stone between the slab and membrane will minimize differential shrinkage.

The floor slab should be suitably reinforced, as per structural considerations, to carry the anticipated loads. Construction joints should be provided at the junctions of the slab and foundations system so that minor amounts of independent movement can occur without causing damage. Large floor areas should be provided with joints at frequent intervals to compensate for concrete volume changes. It is also recommended that the floor slabs not be rigidly connected to columns, walls or foundations.

Pavements

Preparation of pavement subgrades in parking and drive areas should be in accordance with building site preparation and fill requirement recommendations outlined in the Construction Considerations section of the report.

Flexible pavement structures are recommended for light duty pavement (automobile parking area). Typical pavements for this type of commercial development and geologic area based on an estimated California Bearing Ratio (CBR) of less than five (5) are as follows:

<u>Light Duty (Automobile Parking Areas):</u>
25 millimeters Asphaltic Concrete Surface Course (NYDSOT Type 7, 7F)
62.5 millimeters Asphaltic Concrete Binder Course (NYSDOT Type 3)
250 millimeters Aggregate Base Stone (NYSDOT Type 2)

Heavy Duty (Light Commercial or Truck Entrance):
25 millimeters Asphaltic Concrete Surface Course (NYDSOT Type 7, 7F)
87.5 millimeters Asphaltic Concrete Binder Course (NYSDOT Type 3)
300 millimeters Aggregate Base Stone (NYSDOT Type 2)

These sections represent minimum feasible design thicknesses and, as such, periodic pavement maintenance should be anticipated.

All pavement materials and construction procedures should conform to the New York State Department of Transportation (NYSDOT), Materials and Construction Specifications, 1990.

Rigid pavement sections merit consideration for areas to receive high concentrated or sustained loads such as dumpsters, loading areas and storage bins. Rigid pavements of one hundred fifty (150) millimeters in thickness will distribute concentrated loads over a greater area, reducing the possibility of high stress concentrations at subgrade elevations.

All pavements should be sloped a minimum of one (1) percent to provide rapid surface drainage. Water allowed to pond on or adjacent to the pavement could saturate the subgrade and cause premature pavement deterioration. Inclusion of adequate surface and subsurface drainage systems along either side of and within the parking area should be considered to maintain the compacted subgrades as close to optimum moisture conditions as possible.

Actual pavement section thickness should be provided by the design civil engineer based on traffic loads, volume, and the owners design life requirements. The above sections represent minimum thicknesses representative of typical local construction practices and, as such, periodic maintenance should be anticipated.

CONSTRUCTION CONSIDERATIONS

Excavations

After excavation, footing bearing surfaces should be observed and concrete placed as quickly as possible to avoid exposure of the bearing surfaces to wetting and drying. Footing excavations are not to be left open overnight.

In Federal Register, Volume 54, No. 209 (October 1989), the United States Department of Labor, Occupational Safety and Health Administration (OSHA) amended its "Construction Standards for Excavations, 29 CFR, part 1926, Subpart P". This document was issued to better insure the safety of workmen entering trenches or excavations. It is mandated by this federal regulation that all excavations, whether they be utility trenches, basement excavation or footing excavations, be constructed in accordance with the new OSHA guidelines. It is PSI's understanding that these regulations are being strictly enforced and if they are not closely followed, the owner and the contractor could be liable for substantial penalties.

The contractor is solely responsible for the design and construction of stable, temporary excavations and should shore, slope, or bench the sides of the excavations as required to maintain stability of both the excavation sides and bottom. The contractor's "responsible person, as defined in 29 CFR Part 1926," should evaluate the soil exposed in the excavations as part of the contractor's safety procedures. In no case should slope height, slope inclination, or excavation depth, including utility trench excavation depth, exceed those specified in local, state, and federal safety regulations.

PSI is providing this information solely as a service to the client. PSI is not assuming responsibility for construction site safety or the contractor's activities; such responsibility is not being implied and should not be inferred.

Drainage and Groundwater Considerations

Water should not be allowed to collect near or below the foundation or floor slab areas of the building either during or after construction. Undercut or excavated areas should be adequately sloped to facilitate removal of any collected rainwater, groundwater or surface runoff. Positive site drainage should be provided at all times to reduce infiltration of surface water around the perimeter of the building and beneath the floor slabs. All grades should be sloped away from the building and surface drainage should be collected and discharged such that water is not permitted to infiltrate the backfill of the building.

Even though groundwater was not encountered in two (2) boring locations and in the remaining borings locations at a depth deeper than the bottom of foundation elevation, it may be encountered at the bottom of any deep excavations. It is also possible that seasonal variations will cause fluctuations or a water table to be present in the upper soils during the spring months or after a prolonged period of rain. It is recommended that adequate dewatering systems be incorporated to keep any excavations free of water at all times.

Weather Considerations

The soils encountered at this site are known to be sensitive to disturbances caused by construction traffic and to changes in moisture content. During wet weather periods, increases in the moisture content of the soil can cause significant reduction in the soil strength and support capabilities. Care should be exercised during the grading operations at the site. Due to the silty nature of the surficial soils, the traffic of heavy equipment, including heavy compaction equipment, may very well create pumping and a general deterioration of those soils in the presence of water. Therefore, the grading should, if at all possible, performed during a dry season. A layer of crushed stone may be required to allow the movement of construction traffic over the site during wet periods. The contractor should maintain positive site drainage, and if wet or pumping conditions occur, the contractor will be responsible to over excavate the affected soils and to replace them with properly compacted structural fill.

REPORT LIMITATIONS

The recommendations submitted are based on the available soil information developed by PSI and on design information furnished by Mason and Hanger Engineering, Inc. for the proposed structure. If there are any revisions to the plans for the proposed structure, or if deviations from the subsurface conditions noted in this report are encountered during construction, PSI should be retained to determine if changes in the foundation recommendations are required. If PSI is not retained to perform these functions, PSI will not be responsible for the impact of those conditions on the performance of the structure.

The geotechnical engineer warrants that the findings, recommendations, specifications, or professional advice contained herein have been made after being prepared in accordance with generally accepted professional engineering practice in the field of foundation and pavement engineering, soil mechanics, and engineering geology. No other warranties are implied or expressed.

After the plans and specifications are more complete, it is recommended that the geotechnical engineer be provided the opportunity to review the final design and specifications in order to verify that the earthwork and foundation recommendations have been properly interpreted and implemented. It may be necessary to submit supplementary recommendations after review. This report has been prepared for the exclusive use of Mason and Hanger Engineering, Inc. for the specific application to the Niagara Falls Air Reserve Base Consolidated Maintenance Facility project in Niagara Falls, Niagara County, New York.

APPENDIX I

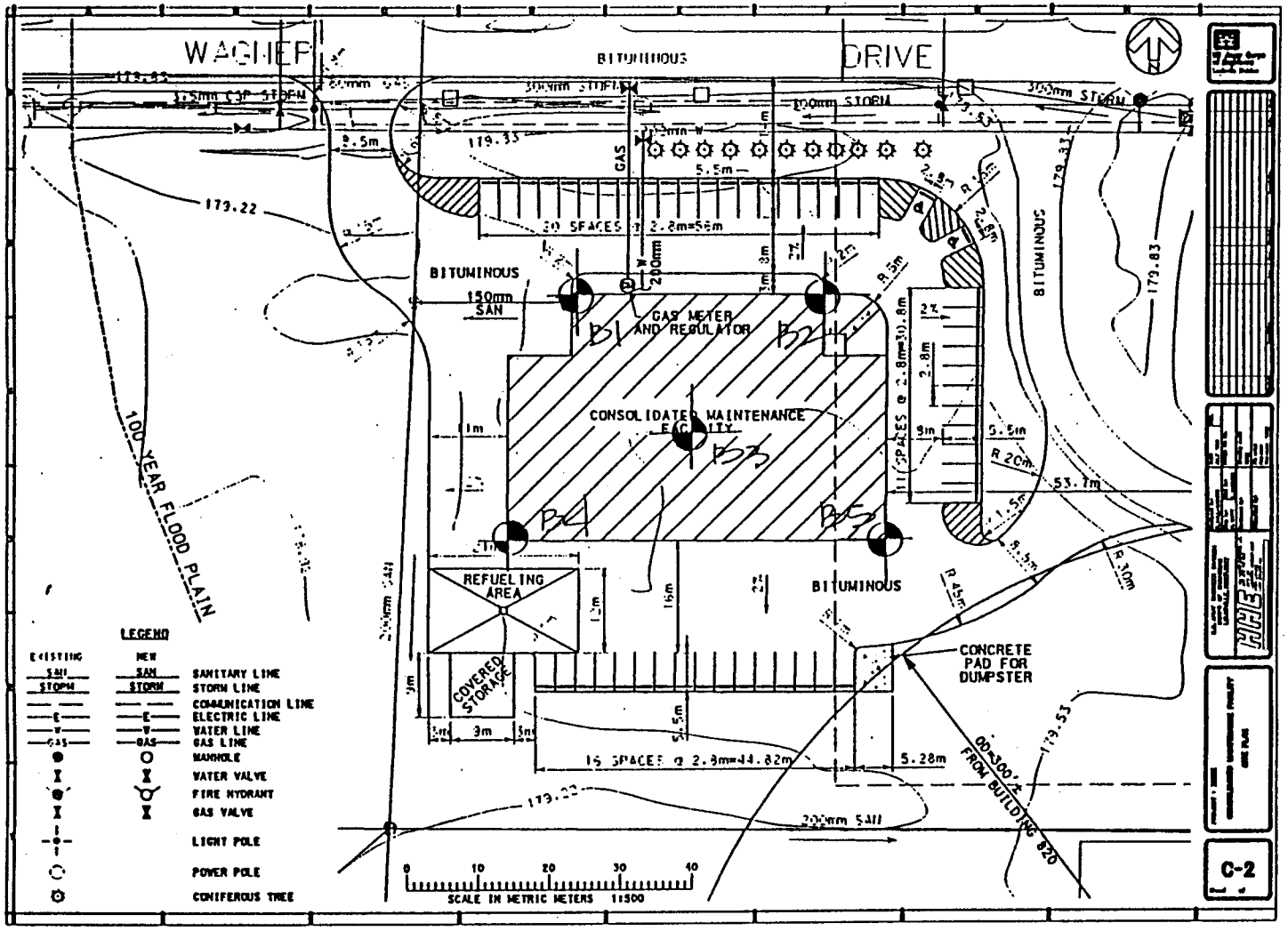

PROJECT NAME		PROJECT NO.
Consolidated Maintenance Facility Wagner Drive NFARS Wheatfield, New York	Boring Location Plan	806-85046
		DATE November 10, 1998

Professional Service Industries

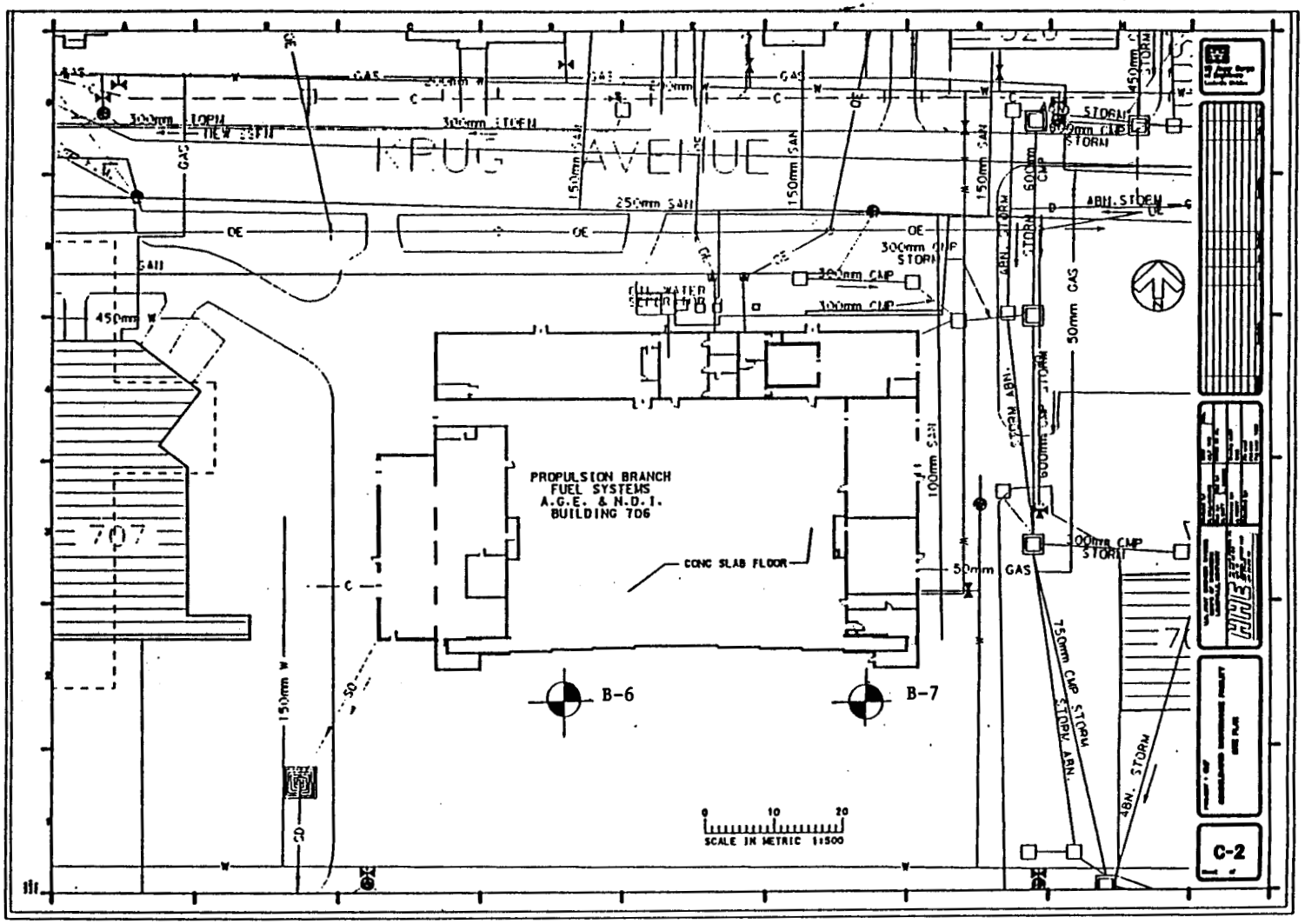

PROJECT NAME		PROJECT NO.
Building 706 Environmental Krug Avenue NFARS Wheatfield, New York	Boring Location Plan	806-85046
		DATE November 10, 1998

APPENDIX II

PROFESSIONAL SERVICE INDUSTRIES, INC.
RECORD OF SUBSURFACE EXPLORATION

Boring: B-1

Project Name: CONSOLIDATED MAINTENANCE FACILITY Date of Boring: OCTOBER 19, 1998

Site: WAGNER DRIVE NFARS WHEATFIELD, NEW YORK Project No.: 806-85046

DESCRIPTION	DEPTH	SAMPLE	N	Qu	Qp	Mc	REMARKS
SURFACE							
Silty Clay, trace Sand and Gravel, reddish-brown, very stiff, moist.					kg/cm2		ELEV: 179.77 M 128 mm Topsoil
		1-SS	18		3+	20	
	1 M						
		2-SS	24		3+	26	
	2 M	3-SS	22		3+	21	
		4-SS	24		3+	16	
	3 M						
	4 M						
		5-SS	20		2.0	26	HOLE CAVED AT 4.5 M
	5 M						
Clay, reddish-brown, very soft, saturated.							
		6-SS	3		0.25	30	LL=31 PI=14
	6 M						
BORING TERMINATED AT 6.1 METERS. GROUNDWATER: AUGER IN: 5.3 M AUGER OUT: NONE							

PROFESSIONAL SERVICE INDUSTRIES, INC.
RECORD OF SUBSURFACE EXPLORATION

Boring: B-2

Project Name: CONSOLIDATED MAINTENANCE FACILITY Date of Boring: OCTOBER 19, 1998

Site: WAGNER DRIVE NFARS WHEATFIELD, NEW YORK Project No.: 806-85046

DESCRIPTION	DEPTH	SAMPLE	N	Qu	Qp	Mc	REMARKS
SURFACE							
Silty Clay, trace Sand and Gravel, reddish-brown, stiff to very stiff, moist.					kg/cm2		ELEV: 179.88 M 153 mm Topsoil
		1-SS	14		3+	21	
	1 M						
		2-SS	31		3+	21	
	2 M	3-SS	24		3+	21	
		4-SS	22		2.25	13	
	3 M						
	4 M						
		5-SS	14		1.25	14	HOLE CAVED AT 4.4 M
	5 M						
Clay, reddish-brown, very soft, saturated.							
		6-SS	4		0.25	35	
	6 M						
BORING TERMINATED AT 6.1 METERS. GROUNDWATER: AUGER IN: AUGER OUT: NONE							

PROFESSIONAL SERVICE INDUSTRIES, INC.
RECORD OF SUBSURFACE EXPLORATION

Boring: B-3

Project Name: CONSOLIDATED MAINTENANCE FACILITY Date of Boring: OCTOBER 19, 1998

Site: WAGNER DRIVE NFARS WHEATFIELD, NEW YORK Project No.: 806-85046

DESCRIPTION	DEPTH	SAMPLE	N	Qu	Qp	Mc	REMARKS
SURFACE							
Sandy Silt trace Gravel, brown, very stiff, moist.					kg/cm2		ELEV: 179.71 M 128 mm Topsoil
		1-SS	26			14	
Silty Clay, trace Sand and Gravel, reddish-brown, stiff to very stiff, moist.	1 M						
		2-SS	26		3+	27	
	2 M	3-SS	24		3+	14	
		4-SS	26		3+	17	
	3 M						
	4 M						
		5-SS	14		3+	19	
	5 M						HOLE CAVED AT 5.0 M
Clay, reddish-brown, medium stiff, wet.							
	6 M	6-SS	10		1.25	30	
BORING TERMINATED AT 6.1 METERS. GROUNDWATER: AUGER IN: NONE AUGER OUT: NONE							

PROFESSIONAL SERVICE INDUSTRIES, INC.
RECORD OF SUBSURFACE EXPLORATION

Boring: B-4

Project Name: CONSOLIDATED MAINTENANCE FACILITY Date of Boring: OCTOBER 19, 1998

Site: WAGNER DRIVE NFARS WHEATFIELD, NEW YORK Project No.: 806-85046

DESCRIPTION	DEPTH	SAMPLE	N	Qu	Qp	Mc	REMARKS
SURFACE							
Silty Clay, trace Sand, brown, very stiff, moist.					kg/cm2		ELEV: 179.38 M
		1-SS	20		3+	22	
Silty Clay, trace Sand and Gravel, reddish-brown, stiff to very stiff, moist.	1 M						
		2-SS	29		3+	26	
	2 M	3-SS	23		2.25	29	
		4-SS	28		3	17	LL=32 PI=14
	3 M						
	4 M						
		5-SS	16		2.5	18	HOLE CAVED AT 4.3 M
	5 M						
Clay, brown, soft, saturated.							
	6 M	6-SS	5		0.25	21	
BORING TERMINATED AT 6.1 METERS. GROUNDWATER: AUGER IN: 6.0 M AUGER OUT: NONE							

PROFESSIONAL SERVICE INDUSTRIES, INC.
RECORD OF SUBSURFACE EXPLORATION

Boring: B-5

Project Name: CONSOLIDATED MAINTENANCE FACILITY Date of Boring: OCTOBER 19, 1998

Site: WAGNER DRIVE NFARS WHEATFIELD, NEW YORK Project No.: 806-85046

DESCRIPTION	DEPTH	SAMPLE	N	Qu	Qp	Mc	REMARKS
SURFACE							
Silty Clay, trace Sand and Gravel, reddish-brown, very stiff, moist.					kg/cm2		ELEV: 179.97 M 52 mm Topsoil
		1-SS	18		3+	22	
	1 M						
		2-SS	30		3+	26	
	2 M	3-SS	29		3+	24	LL=48 PI=18
		4-SS	26		3+	18	
	3 M						
	4 M						
Clay, reddish-brown, stiff, saturated.		5-SS	11		0.25	41	
	5 M						
		6-SS	11		0.5	31	
	6 M						
BORING TERMINATED AT 6.1 METERS. GROUNDWATER: AUGER IN: 6.0 M AUGER OUT: NONE							

PROFESSIONAL SERVICE INDUSTRIES, INC.
RECORD OF SUBSURFACE EXPLORATION

Boring: B-6

Project Name: BUILDING 706 ENVIRONMENTAL Date of Boring: OCTOBER 16, 1998

Site: 10685 KRUG AVE. NFARS WHEATFIELD, NY Project No.: 806-85046

DESCRIPTION	DEPTH	COND.	BLOWS/6"	NO.	TYPE	REC.	REMARKS
SURFACE							
Silty Sand, little Gravel and Clay, brown, medium dense to very dense, moist.							102 mm Asphalt 203 mm Stone Base
		I	12-9	1	SS	120 mm	
	1 M	I	11-6 18-24	2	SS	0 mm	
		I	9-19 16-14	3	SS	400 mm	
	2 M	I	18 50/25mm	4	SS	210 mm	Hole Caved at 1.8 Meters.
AUGER REFUSAL AT 2.1 METERS. GROUNDWATER: AUGER IN: NONE AUGER OUT: NONE							
	3 M						
	4 M						
	5 M						

PROFESSIONAL SERVICE INDUSTRIES, INC.
RECORD OF SUBSURFACE EXPLORATION

Boring: B-7

Project Name: BUILDING 706 ENVIRONMENTAL Date of Boring: OCTOBER 16, 1998

Site: 10685 KRUG AVE. NFARS WHEATFIELD, NY Project No.: 806-85046

DESCRIPTION	DEPTH	COND.	BLOWS/6"	NO.	TYPE	REC.	REMARKS
SURFACE							
Silty Sand, little Gravel and Clay, brown, medium dense to very dense, moist.							203 mm Asphalt 229 mm Stone Base
		I	24-20	1	SS	300 mm	
	1 M	I	15-12 12-14	2	SS	450 mm	
		I	18-18 50/75 mm	3	SS	400 mm	Hole Caved at 1.4 Meters.
AUGER REFUSAL AT 1.8 METERS GROUNDWATER: AUGER IN: NONE AUGER OUT: NONE	2 M						
	3 M						
	4 M						
	5 M						

Pace Analytical

Pace Analytical Services, Inc.
1700 Elm Street - Suite 200
Minneapolis, MN 55414
Tel: 612-617-6400
Fax: 612-617-6444

November 05, 1998

Mr. David Sabol
PSI, Inc.
605 Young Street
Tonawanda, NY 14150

RE: Pace Project Number: 1010337
Client Project ID: 806-85045,Consolidate Facility

Dear Mr. Sabol:

Enclosed are the results of analyses for sample(s) received on October 20, 1998. If you have any questions concerning this report, please feel free to contact me.

Sincerely,

Steve Barrett
Project Manager

Enclosures

REPORT OF LABORATORY ANALYSIS

This report shall not be reproduced, except in full,
without the written consent of Pace Analytical Services, Inc.

Pace Analytical

Pace Analytical Services, Inc.
1700 Elm Street - Suite 200
Minneapolis, MN 55414
Tel: 612-617-6400
Fax: 612-617-6444

DATE: 11/05/98
PAGE: 1

PSI, Inc.
605 Young Street
Tonawanda, NY 14150

Pace Project Number: 1010337
Client Project ID: 806-85045,Consolidate Facility

Attn: Mr. David Sabol
Phone: 212-889-0294

Solid results are reported on a wet weight basis

Pace Sample No: 10899763 Date Collected: 10/17/98 Matrix: Soil
Client Sample ID: B7 S2 (2-4') Date Received: 10/20/98

Parameters	Results	Units	PRL	Analyzed	Analyst	CAS#	Footnotes
GC/MS -- VOA							
GC/MS VOCs by 8260	Method: EPA 8260				Prep Method: EPA 8260		
Dichlorodifluoromethane	ND	ug/kg	10	10/28/98	TAW	75-71-8	
Chloromethane	ND	ug/kg	5	10/28/98	TAW	74-87-3	
Vinyl Chloride	ND	ug/kg	5	10/28/98	TAW	75-01-4	
Bromomethane	ND	ug/kg	5	10/28/98	TAW	74-83-9	
Chloroethane	ND	ug/kg	5	10/28/98	TAW	75-00-3	
Trichlorofluoromethane	ND	ug/kg	5	10/28/98	TAW	75-69-4	
Methylene Chloride	ND	ug/kg	5	10/28/98	TAW	75-09-2	
1,1-Dichloroethene	ND	ug/kg	5	10/28/98	TAW	75-35-4	
trans-1,2-Dichloroethene	ND	ug/kg	5	10/28/98	TAW	156-60-5	
1,1-Dichloroethane	ND	ug/kg	5	10/28/98	TAW	75-34-3	
2,2-Dichloropropane	ND	ug/kg	5	10/28/98	TAW	594-20-7	
cis-1,2-Dichloroethene	5.9	ug/kg	5	10/28/98	TAW	156-59-2	
Chloroform	ND	ug/kg	5	10/28/98	TAW	67-66-3	
Bromochloromethane	ND	ug/kg	5	10/28/98	TAW	74-97-5	
1,1,1-Trichloroethane	ND	ug/kg	5	10/28/98	TAW	71-55-6	
Carbon Tetrachloride	ND	ug/kg	5	10/28/98	TAW	56-23-5	
1,1-Dichloropropene	ND	ug/kg	5	10/28/98	TAW	563-58-6	
Benzene	ND	ug/kg	5	10/28/98	TAW	71-43-2	
1,2-Dichloroethane	ND	ug/kg	5	10/28/98	TAW	107-06-2	
Trichloroethene	70	ug/kg	5	10/28/98	TAW	79-01-6	
1,2-Dichloropropane	ND	ug/kg	5	10/28/98	TAW	78-87-5	
Bromodichloromethane	ND	ug/kg	5	10/28/98	TAW	75-27-4	
Dibromomethane	ND	ug/kg	5	10/28/98	TAW	74-95-3	
trans-1,3-Dichloropropene	ND	ug/kg	5	10/28/98	TAW	10061-02-6	
Toluene	ND	ug/kg	5	10/28/98	TAW	108-88-3	
cis-1,3-Dichloropropene	ND	ug/kg	5	10/28/98	TAW	10061-01-5	

REPORT OF LABORATORY ANALYSIS

This report shall not be reproduced, except in full,
without the written consent of Pace Analytical Services, Inc.

Pace Analytical

Pace Analytical Services, Inc.
1700 Elm Street - Suite 200
Minneapolis, MN 55414
Tel: 612-617-6400
Fax: 612-617-6444

Pace Project Number: 1010337
Client Project ID: 806-85045,Consolidate Facility

Pace Sample No: 10899763
Client Sample ID: B7 S2 (2-4')
Date Collected: 10/17/98
Date Received: 10/20/98
Matrix: Soil

Parameters	Results	Units	PRL	Analyzed	Analyst	CAS#	Footnotes
1,1,2-Trichloroethane	ND	ug/kg	5	10/28/98	TAW	79-00-5	
Tetrachloroethene	ND	ug/kg	5	10/28/98	TAW	127-18-4	
1,3-Dichloropropane	ND	ug/kg	5	10/28/98	TAW	142-28-9	
Dibromochloromethane	ND	ug/kg	5	10/28/98	TAW	124-48-1	
1,2-Dibromoethane	ND	ug/kg	5	10/28/98	TAW	106-93-4	
Chlorobenzene	ND	ug/kg	5	10/28/98	TAW	108-90-7	
1,1,1,2-Tetrachloroethane	ND	ug/kg	5	10/28/98	TAW	630-20-6	
Ethylbenzene	ND	ug/kg	5	10/28/98	TAW	100-41-4	
Xylene (Total)	ND	ug/kg	5	10/28/98	TAW	1330-20-7	
Styrene	ND	ug/kg	5	10/28/98	TAW	100-42-5	
Bromoform	ND	ug/kg	5	10/28/98	TAW	75-25-2	
Isopropylbenzene (Cumene)	ND	ug/kg	5	10/28/98	TAW	98-82-8	
1,1,2,2-Tetrachloroethane	ND	ug/kg	5	10/28/98	TAW	79-34-5	
Bromobenzene	ND	ug/kg	5	10/28/98	TAW	108-86-1	
1,2,3-Trichloropropane	ND	ug/kg	5	10/28/98	TAW	96-18-4	
n-Propylbenzene	ND	ug/kg	5	10/28/98	TAW	103-65-1	
2-Chlorotoluene	ND	ug/kg	5	10/28/98	TAW	95-49-8	
1,3,5-Trimethylbenzene	ND	ug/kg	5	10/28/98	TAW	108-67-8	
4-Chlorotoluene	ND	ug/kg	5	10/28/98	TAW	106-43-4	
tert-Butylbenzene	ND	ug/kg	5	10/28/98	TAW	98-06-6	
1,2,4-Trimethylbenzene	ND	ug/kg	5	10/28/98	TAW	95-63-6	
sec-Butylbenzene	ND	ug/kg	5	10/28/98	TAW	135-98-8	
p-Isopropyltoluene	ND	ug/kg	5	10/28/98	TAW	99-87-6	
1,3-Dichlorobenzene	ND	ug/kg	5	10/28/98	TAW	541-73-1	
1,4-Dichlorobenzene	ND	ug/kg	5	10/28/98	TAW	106-46-7	
n-Butylbenzene	ND	ug/kg	5	10/28/98	TAW	104-51-8	
1,2-Dichlorobenzene	ND	ug/kg	5	10/28/98	TAW	95-50-1	
1,2-Dibromo-3-Chloropropane	ND	ug/kg	5	10/28/98	TAW	96-12-8	
1,2,4-Trichlorobenzene	ND	ug/kg	5	10/28/98	TAW	120-82-1	
Hexachlorobutadiene	ND	ug/kg	5	10/28/98	TAW	87-68-3	
Naphthalene	ND	ug/kg	5	10/28/98	TAW	91-20-3	
1,2,3-Trichlorobenzene	ND	ug/kg	5	10/28/98	TAW	87-61-6	
Dibromofluoromethane (S)	102	%		10/28/98	TAW	1868-53-7	
Toluene-d8 (S)	108	%		10/28/98	TAW	2037-26-5	
4-Bromofluorobenzene (S)	106	%		10/28/98	TAW	460-00-4	
1,2-Dichloroethane-d4 (S)	104	%		10/28/98	TAW	17060-07-0	

REPORT OF LABORATORY ANALYSIS

This report shall not be reproduced, except in full,
without the written consent of Pace Analytical Services, Inc.

Pace Analytical

Pace Analytical Services, Inc.
1700 Elm Street - Suite 200
Minneapolis, MN 55414
Tel: 612-617-6400
Fax: 612-617-6444

Pace Project Number: 1010337
Client Project ID: 806-85045.Consolidate Facility

Pace Sample No: 10899771 Date Collected: 10/17/98 Matrix: Soil
Client Sample ID: B6 S3 (4-6') Date Received: 10/20/98

Parameters	Results	Units	PRL	Analyzed	Analyst	CAS#	Footnotes
GC/MS -- VOA							
GC/MS VOCs by 8260	Method: EPA 8260				Prep Method: EPA 8260		
Dichlorodifluoromethane	ND	ug/kg	10	10/28/98	TAW	75-71-8	
Chloromethane	ND	ug/kg	5	10/28/98	TAW	74-87-3	
Vinyl Chloride	ND	ug/kg	5	10/28/98	TAW	75-01-4	
Bromomethane	ND	ug/kg	5	10/28/98	TAW	74-83-9	
Chloroethane	ND	ug/kg	5	10/28/98	TAW	75-00-3	
Trichlorofluoromethane	ND	ug/kg	5	10/28/98	TAW	75-69-4	
Methylene Chloride	ND	ug/kg	5	10/28/98	TAW	75-09-2	
1,1-Dichloroethene	ND	ug/kg	5	10/28/98	TAW	75-35-4	
trans-1,2-Dichloroethene	ND	ug/kg	5	10/28/98	TAW	156-60-5	
1,1-Dichloroethane	ND	ug/kg	5	10/28/98	TAW	75-34-3	
2,2-Dichloropropane	ND	ug/kg	5	10/28/98	TAW	594-20-7	
cis-1,2-Dichloroethene	ND	ug/kg	5	10/28/98	TAW	156-59-2	
Chloroform	ND	ug/kg	5	10/28/98	TAW	67-66-3	
Bromochloromethane	ND	ug/kg	5	10/28/98	TAW	74-97-5	
1,1,1-Trichloroethane	ND	ug/kg	5	10/28/98	TAW	71-55-6	
Carbon Tetrachloride	ND	ug/kg	5	10/28/98	TAW	56-23-5	
1,1-Dichloropropene	ND	ug/kg	5	10/28/98	TAW	563-58-6	
Benzene	ND	ug/kg	5	10/28/98	TAW	71-43-2	
1,2-Dichloroethane	ND	ug/kg	5	10/28/98	TAW	107-06-2	
Trichloroethene	ND	ug/kg	5	10/28/98	TAW	79-01-6	
1,2-Dichloropropane	ND	ug/kg	5	10/28/98	TAW	78-87-5	
Bromodichloromethane	ND	ug/kg	5	10/28/98	TAW	75-27-4	
Dibromomethane	ND	ug/kg	5	10/28/98	TAW	74-95-3	
trans-1,3-Dichloropropene	ND	ug/kg	5	10/28/98	TAW	10061-02-6	
Toluene	ND	ug/kg	5	10/28/98	TAW	108-88-3	
cis-1,3-Dichloropropene	ND	ug/kg	5	10/28/98	TAW	10061-01-5	
1,1,2-Trichloroethane	ND	ug/kg	5	10/28/98	TAW	79-00-5	
Tetrachloroethene	ND	ug/kg	5	10/28/98	TAW	127-18-4	
1,3-Dichloropropane	ND	ug/kg	5	10/28/98	TAW	142-28-9	
Dibromochloromethane	ND	ug/kg	5	10/28/98	TAW	124-48-1	
1,2-Dibromoethane	ND	ug/kg	5	10/28/98	TAW	106-93-4	
Chlorobenzene	ND	ug/kg	5	10/28/98	TAW	108-90-7	
1,1,1,2-Tetrachloroethane	ND	ug/kg	5	10/28/98	TAW	630-20-6	
Ethylbenzene	ND	ug/kg	5	10/28/98	TAW	100-41-4	
Xylene (Total)	ND	ug/kg	5	10/28/98	TAW	1330-20-7	
Styrene	ND	ug/kg	5	10/28/98	TAW	100-42-5	

REPORT OF LABORATORY ANALYSIS

This report shall not be reproduced, except in full,
without the written consent of Pace Analytical Services, Inc.

Pace Analytical

Pace Analytical Services, Inc.
1700 Elm Street - Suite 200
Minneapolis, MN 55414
Tel: 612-617-6400
Fax: 612-617-6444

Pace Project Number: 1010337
Client Project ID: 806-85045,Consolidate Facility

Pace Sample No: 10899771 Date Collected: 10/17/98 Matrix: Soil
Client Sample ID: B6 S3 (4-6') Date Received: 10/20/98

Parameters	Results	Units	PRL	Analyzed	Analyst	CAS#	Footnotes
Bromoform	ND	ug/kg	5	10/28/98	TAW	75-25-2	
Isopropylbenzene (Cumene)	ND	ug/kg	5	10/28/98	TAW	98-82-8	
1,1,2,2-Tetrachloroethane	ND	ug/kg	5	10/28/98	TAW	79-34-5	
Bromobenzene	ND	ug/kg	5	10/28/98	TAW	108-86-1	
1,2,3-Trichloropropane	ND	ug/kg	5	10/28/98	TAW	96-18-4	
n-Propylbenzene	ND	ug/kg	5	10/28/98	TAW	103-65-1	
2-Chlorotoluene	ND	ug/kg	5	10/28/98	TAW	95-49-8	
1,3,5-Trimethylbenzene	ND	ug/kg	5	10/28/98	TAW	108-67-8	
4-Chlorotoluene	ND	ug/kg	5	10/28/98	TAW	106-43-4	
tert-Butylbenzene	ND	ug/kg	5	10/28/98	TAW	98-06-6	
1,2,4-Trimethylbenzene	ND	ug/kg	5	10/28/98	TAW	95-63-6	
sec-Butylbenzene	ND	ug/kg	5	10/28/98	TAW	135-98-8	
p-Isopropyltoluene	ND	ug/kg	5	10/28/98	TAW	99-87-6	
1,3-Dichlorobenzene	ND	ug/kg	5	10/28/98	TAW	541-73-1	
1,4-Dichlorobenzene	ND	ug/kg	5	10/28/98	TAW	106-46-7	
n-Butylbenzene	ND	ug/kg	5	10/28/98	TAW	104-51-8	
1,2-Dichlorobenzene	ND	ug/kg	5	10/28/98	TAW	95-50-1	
1,2-Dibromo-3-Chloropropane	ND	ug/kg	5	10/28/98	TAW	96-12-8	
1,2,4-Trichlorobenzene	ND	ug/kg	5	10/28/98	TAW	120-82-1	
Hexachlorobutadiene	ND	ug/kg	5	10/28/98	TAW	87-68-3	
Naphthalene	ND	ug/kg	5	10/28/98	TAW	91-20-3	
1,2,3-Trichlorobenzene	ND	ug/kg	5	10/28/98	TAW	87-61-6	
Dibromofluoromethane (S)	100	%		10/28/98	TAW	1868-53-7	
Toluene-d8 (S)	106	%		10/28/98	TAW	2037-26-5	
4-Bromofluorobenzene (S)	104	%		10/28/98	TAW	460-00-4	
1,2-Dichloroethane-d4 (S)	98	%		10/28/98	TAW	17060-07-0	

REPORT OF LABORATORY ANALYSIS

This report shall not be reproduced, except in full,
without the written consent of Pace Analytical Services, Inc.

Pace Analytical

Pace Analytical Services, Inc.
1700 Elm Street - Suite 200
Minneapolis, MN 55414
Tel: 612-617-6400
Fax: 612-617-6444

Pace Project Number: 1010337
Client Project ID: 806-85045,Consolidate Facility

PARAMETER FOOTNOTES

ND	Not Detected
NC	Not Calculable
PRL	Pace Reporting Limit
(S)	Surrogate

REPORT OF LABORATORY ANALYSIS

This report shall not be reproduced, except in full,
without the written consent of Pace Analytical Services, Inc.

Pace Analytical Services, Inc.
1700 Elm Street - Suite 200
Minneapolis, MN 55414
Tel: 612-617-6400
Fax: 612-617-6444

Pace Analytical

QUALITY CONTROL DATA

DATE: 11/05/98

PSI, Inc.
605 Young Street
Tonawanda, NY 14150

Pace Project Number: 1010337
Client Project ID: 806-85045,Consolidate Facility

Attn: Mr. David Sabol
Phone: 212-889-0294

QC Batch ID: 18180
Analysis Method: EPA 8260
Associated Pace Samples: 10899763 10899771

QC Batch Method: EPA 8260
Analysis Description: GC/MS VOCs by 8260

METHOD BLANK: 10917912
Associated Pace Samples:
10899763 10899771

Parameter	Units	Method Blank Result	PRL	Footnotes
Dichlorodifluoromethane	ug/kg	ND	10	
Chloromethane	ug/kg	ND	5	
Vinyl Chloride	ug/kg	ND	5	
Bromomethane	ug/kg	ND	5	
Chloroethane	ug/kg	ND	5	
Trichlorofluoromethane	ug/kg	ND	5	
Methylene Chloride	ug/kg	ND	5	
1,1-Dichloroethene	ug/kg	ND	5	
trans-1,2-Dichloroethene	ug/kg	ND	5	
1,1-Dichloroethane	ug/kg	ND	5	
2,2-Dichloropropane	ug/kg	ND	5	
cis-1,2-Dichloroethene	ug/kg	ND	5	
Chloroform	ug/kg	ND	5	
Bromochloromethane	ug/kg	ND	5	
1,1,1-Trichloroethane	ug/kg	ND	5	
Carbon Tetrachloride	ug/kg	ND	5	
1,1-Dichloropropene	ug/kg	ND	5	
Benzene	ug/kg	ND	5	
1,2-Dichloroethane	ug/kg	ND	5	
Trichloroethene	ug/kg	ND	5	
1,2-Dichloropropane	ug/kg	ND	5	
Bromodichloromethane	ug/kg	ND	5	
Dibromomethane	ug/kg	ND	5	
trans-1,3-Dichloropropene	ug/kg	ND	5	
Toluene	ug/kg	ND	5	

REPORT OF LABORATORY ANALYSIS

This report shall not be reproduced, except in full,
without the written consent of Pace Analytical Services, Inc.

Pace Analytical

Pace Analytical Services, Inc.
1700 Elm Street - Suite 200
Minneapolis, MN 55414
Tel: 612-617-6400
Fax: 612-617-6444

QUALITY CONTROL DATA

Pace Project Number: 1010337
Client Project ID: 806-85045,Consolidate Facility

METHOD BLANK: 10917912
Associated Pace Samples:

	10899763	10899771		
		Method Blank		
Parameter	Units	Result	PRL	Footnotes
cis-1,3-Dichloropropene	ug/kg	ND	5	
1,1,2-Trichloroethane	ug/kg	ND	5	
Tetrachloroethene	ug/kg	ND	5	
1,3-Dichloropropane	ug/kg	ND	5	
Dibromochloromethane	ug/kg	ND	5	
1,2-Dibromoethane	ug/kg	ND	5	
Chlorobenzene	ug/kg	ND	5	
1,1,1,2-Tetrachloroethane	ug/kg	ND	5	
Ethylbenzene	ug/kg	ND	5	
Xylene (Total)	ug/kg	ND	5	
Styrene	ug/kg	ND	5	
Bromoform	ug/kg	ND	5	
Isopropylbenzene (Cumene)	ug/kg	ND	5	
1,1,2,2-Tetrachloroethane	ug/kg	ND	5	
Bromobenzene	ug/kg	ND	5	
1,2,3-Trichloropropane	ug/kg	ND	5	
n-Propylbenzene	ug/kg	ND	5	
2-Chlorotoluene	ug/kg	ND	5	
1,3,5-Trimethylbenzene	ug/kg	ND	5	
4-Chlorotoluene	ug/kg	ND	5	
tert-Butylbenzene	ug/kg	ND	5	
1,2,4-Trimethylbenzene	ug/kg	ND	5	
sec-Butylbenzene	ug/kg	ND	5	
p-Isopropyltoluene	ug/kg	ND	5	
1,3-Dichlorobenzene	ug/kg	ND	5	
1,4-Dichlorobenzene	ug/kg	ND	5	
n-Butylbenzene	ug/kg	ND	5	
1,2-Dichlorobenzene	ug/kg	ND	5	
1,2-Dibromo-3-Chloropropane	ug/kg	ND	5	
1,2,4-Trichlorobenzene	ug/kg	ND	5	
Hexachlorobutadiene	ug/kg	ND	5	
Naphthalene	ug/kg	ND	5	
1,2,3-Trichlorobenzene	ug/kg	ND	5	
Dibromofluoromethane (S)	%	102		
Toluene-d8 (S)	%	106		
4-Bromofluorobenzene (S)	%	100		
1,2-Dichloroethane-d4 (S)	%	100		

REPORT OF LABORATORY ANALYSIS

This report shall not be reproduced, except in full,
without the written consent of Pace Analytical Services, Inc.

Pace Analytical

Pace Analytical Services, Inc.
1700 Elm Street - Suite 200
Minneapolis, MN 55414
Tel: 612-617-6400
Fax: 612-617-6444

QUALITY CONTROL DATA

DATE: 11/05/98

Pace Project Number: 1010337
Client Project ID: 806-85045,Consolidate Facility

MATRIX SPIKE: 10917946

Parameter	Units	10908234	Spike Conc.	Matrix Spike Result	Spike % Rec	Footnotes
1,1-Dichloroethene	ug/kg	0	50	44.00	88.0	
Benzene	ug/kg	0	50	42.00	84.0	
Trichloroethene	ug/kg	0	50	71.00	142	1
Toluene	ug/kg	0	50	41.00	82.0	
Chlorobenzene	ug/kg	0	50	40.00	80.0	
Dibromofluoromethane (S)					88	
Toluene-d8 (S)					106	
4-Bromofluorobenzene (S)					104	
1,2-Dichloroethane-d4 (S)					100	

LABORATORY CONTROL SAMPLE: 10917920

Parameter	Units	Spike Conc.	LCS Result	Spike % Rec	Footnotes
Dichlorodifluoromethane	ug/kg	20	14.00	70.0	
Chloromethane	ug/kg	20	16.00	80.0	
Vinyl Chloride	ug/kg	20	18.00	90.0	
Bromomethane	ug/kg	20	31.00	155	
Chloroethane	ug/kg	20	20.00	100	
Trichlorofluoromethane	ug/kg	20	20.00	100	
Methylene Chloride	ug/kg	40	37.00	92.5	
1,1-Dichloroethene	ug/kg	20	20.00	100	
trans-1,2-Dichloroethene	ug/kg	20	20.00	100	
1,1-Dichloroethane	ug/kg	20	20.00	100	
2,2-Dichloropropane	ug/kg	20	20.00	100	
cis-1,2-Dichloroethene	ug/kg	20	20.00	100	
Chloroform	ug/kg	20	20.00	100	
Bromochloromethane	ug/kg	20	21.00	105	
1,1,1-Trichloroethane	ug/kg	20	21.00	105	
Carbon Tetrachloride	ug/kg	20	22.00	110	
1,1-Dichloropropene	ug/kg	20	22.00	110	
Benzene	ug/kg	20	20.00	100	
1,2-Dichloroethane	ug/kg	20	20.00	100	
Trichloroethene	ug/kg	20	20.00	100	
1,2-Dichloropropane	ug/kg	20	20.00	100	
Bromodichloromethane	ug/kg	20	19.00	95.0	
Dibromomethane	ug/kg	20	19.00	95.0	
trans-1,3-Dichloropropene	ug/kg	20	18.00	90.0	
Toluene	ug/kg	20	20.00	100	
cis-1,3-Dichloropropene	ug/kg	20	19.00	95.0	

REPORT OF LABORATORY ANALYSIS

This report shall not be reproduced, except in full,
without the written consent of Pace Analytical Services, Inc.

Pace Analytical

Pace Analytical Services, Inc.
1700 Elm Street - Suite 200
Minneapolis, MN 55414
Tel: 612-617-6400
Fax: 612-617-6444

QUALITY CONTROL DATA

Pace Project Number: 1010337
Client Project ID: 806-85045,Consolidate Facility

LABORATORY CONTROL SAMPLE: 10917920

Parameter	Units	Spike Conc.	LCS Result	Spike % Rec	Footnotes
1,1,2-Trichloroethane	ug/kg	20	20.00	100	
Tetrachloroethene	ug/kg	20	21.00	105	
1,3-Dichloropropane	ug/kg	20	20.00	100	
Dibromochloromethane	ug/kg	20	19.00	95.0	
1,2-Dibromoethane	ug/kg	20	18.00	90.0	
Chlorobenzene	ug/kg	20	20.00	100	
1,1,1,2-Tetrachloroethane	ug/kg	20	20.00	100	
Ethylbenzene	ug/kg	20	20.00	100	
Xylene (Total)	ug/kg	60	60.00	100	
Styrene	ug/kg	20	20.00	100	
Bromoform	ug/kg	20	19.00	95.0	
Isopropylbenzene (Cumene)	ug/kg	20	20.00	100	
1,1,2,2-Tetrachloroethane	ug/kg	20	19.00	95.0	
Bromobenzene	ug/kg	20	20.00	100	
1,2,3-Trichloropropane	ug/kg	20	20.00	100	
n-Propylbenzene	ug/kg	20	20.00	100	
2-Chlorotoluene	ug/kg	20	19.00	95.0	
1,3,5-Trimethylbenzene	ug/kg	20	18.00	90.0	
4-Chlorotoluene	ug/kg	20	19.00	95.0	
tert-Butylbenzene	ug/kg	20	20.00	100	
1,2,4-Trimethylbenzene	ug/kg	20	18.00	90.0	
sec-Butylbenzene	ug/kg	20	20.00	100	
p-Isopropyltoluene	ug/kg	20	19.00	95.0	
1,3-Dichlorobenzene	ug/kg	20	19.00	95.0	
1,4-Dichlorobenzene	ug/kg	20	19.00	95.0	
n-Butylbenzene	ug/kg	20	19.00	95.0	
1,2-Dichlorobenzene	ug/kg	20	19.00	95.0	
1,2-Dibromo-3-Chloropropane	ug/kg	40	42.00	105	
1,2,4-Trichlorobenzene	ug/kg	20	17.00	85.0	
Hexachlorobutadiene	ug/kg	20	21.00	105	
Naphthalene	ug/kg	20	17.00	85.0	
1,2,3-Trichlorobenzene	ug/kg	20	18.00	90.0	
Dibromofluoromethane (S)				100	
Toluene-d8 (S)				104	
4-Bromofluorobenzene (S)				104	
1,2-Dichloroethane-d4 (S)				98	

This report shall not be reproduced, except in full,
without the written consent of Pace Analytical Services, Inc.

Pace Analytical

Pace Analytical Services, Inc.
1700 Elm Street - Suite 200
Minneapolis, MN 55414
Tel: 612-617-6400
Fax: 612-617-6444

Pace Project Number: 1010337
Client Project ID: 806-85045.Consolidate Facility

QUALITY CONTROL DATA PARAMETER FOOTNOTES

Consistent with EPA guidelines unrounded concentrations are displayed and have been used to calculate % Rec and RPD values.

ND	Not Detected
NC	Not Calculable
PRL	Pace Reporting Limit
RPD	Relative Percent Difference
(S)	Surrogate
[1]	The spike recovery was outside acceptance limits for the MS and /or MSD due to matrix interference. The LCS and/or LCSD were within acceptance limits showing that the laboratory is in control and the data is acceptable.

This report shall not be reproduced, except in full,
without the written consent of Pace Analytical Services, Inc.

Unified Soil Classification System

ASTM Designation D - 2487

Professional Service Industries, Inc.

Based upon percentage of material passing No. 200 sieve classify as:

Less than 5%	GW, GP, SW, SP
More than 12%	GM, GC, SM, SC
5% to 12%	Borderline, use dual symbols

Coarse Grained Soils (More than half of material is larger than No. 200 sieve)	Gravels (More than 50% retained on No. 4 sieve)	GW	Well graded gravels, gravel-sand mixtures, little or no fines	$C_u = \frac{D_{60}}{D_{10}} > 4$	$1 < C_c = \frac{[D_{30}]^2}{D_{10} \cdot D_{60}} < 3$
		GP	Poorly graded gravels, gravel-sand mixtures, little or no fines	Does not meet all requirements for GW	
		GM	Silty gravels, gravel-sand-silt mixtures	below A Line, PI < 4	in shaded area 4 < PI < 7 Dual Symbols
		GC	Clayey gravels, gravel-sand-clay mixtures	above A Line, PI > 7	
	Sands (More than 50% passing a No. 4 sieve)	SW	Well graded sands, gravelly sands, little or no fines	$C_u = \frac{D_{60}}{D_{10}} > 6$	$1 < C_c = \frac{[D_{30}]^2}{D_{10} \cdot D_{60}} < 3$
		SP	Poorly graded sands, gravelly sands, little or no fines	Does not meet all requirements for SW	
		SM	Silty sands, sand-silt mixtures	below A Line, PI < 4	in shaded area 4 < PI < 7 Dual Symbols
		SC	Clayey sands, sand-clay mixtures	above A Line, PI > 7	
Fine Grained Soils (More than half of material is smaller than No. 200 sieve)	Silts & Clays (LL less than 50)	ML	Inorganic silts, very fine sands, rock flour, silty or clayey fine sands or clayey silts with slight plasticity		
		CL	Inorganic clays of low to medium plasticity, gravelly clays, sandy clays, silty clays, lean clays		
		OL	Organic silts and organic silty clays of low plasticity		
	Silts & Clays (LL greater than 50)	MH	Inorganic silts, micaceous or diatomaceous fine sandy or silty soils, plastic silts		
		CH	Inorganic clays of high plasticity fat clays		
		OH	Organic clays of medium to high plasticity		
	Highly Organic Soil	Pt	Peat and other highly organic soils		

Plot intersection of PI and LL as determined by Atterberg Limits tests. Data points above A LINE indicate Clay soils, those below the A LINE indicate Silt.

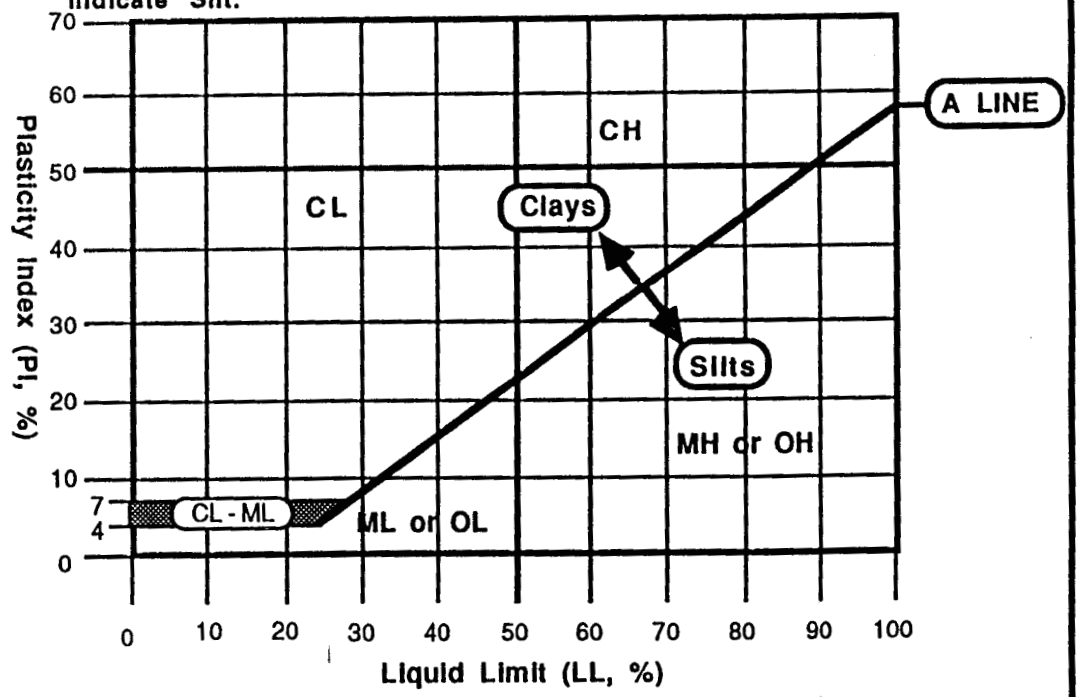

FIELD CLASSIFICATION SYSTEM FOR SOIL EXPLORATION

COHESIONLESS SOILS

(Silt, Sand, Gravel and Combinations)

Density

Very Loose	5 blows per foot or less
Loose	6 - 10 blows per foot
Medium Dense	11 - 30 blows per foot
Dense	31 - 50 blows per foot
Very Dense	51 blows per foot or more

Relative Proportions

Descriptive Term	Percent
Trace	1 -10
Little	11 - 20
Some	21 -35
And	36 - 50

Particle Size Identification

Boulders		8 inch diameter or more
Cobbles		3 - 8 inch diameter
Gravel	Coarse	1 - 3 inches
	Medium	1/2 - 1 inch
	Fine	1/4 - 1/2 inch
Sand	Coarse	0.6 mm - 1/4 inch (diameter of pencil lead)
	Medium	0.2 mm - 0.6 mm (diameter of broom straw)
	Fine	0.05 mm - 0.2 mm (diameter of human hair)
Silt		0.002 mm - 0.05 mm (cannot see particles)

COHESIVE SOILS

(Clay, Silt and Combinations)

Consistency

Very soft	3 blows per foot or less
Soft	4 - 5 blows per foot
Medium Stiff	6 -10 blows per foot
Stiff	11 -15 blows per foot
Very Stiff	16 - 30 blows per foot
Hard	31 blows per foot or more

Plasticity

Degree of Plasticity	Plasticity Index
None to slight	0 - 4
Slight	5 - 7
Medium	8 - 22
High to very high	over 22

CLASSIFICATION LOGS ARE MADE BY VISUAL EXAMINATION OF SAMPLES.

Standard Penetra: Test Driving a 2.0" O.D., 1 3/8" I.D., sampler a distance of 1.0 foot into undisturbed soil with a 140 pound hammer free falling a distance of 30 inches. It is customary for ITL to drive the spoon 6.0 inches to seat into undisturbed soil, then perform the test. The quantity of hammer blows for seating the sampler and performing the test are recorded for each 6.0 inches of penetration on the Field Exploration Log (example: $\frac{6}{10 - 13}$). The standard penetration test result can be obtained by adding the lower two figures (i.e. 10 + 13 = 23). The reader is referenced to ASTM D1586.

Strata Changes Boundaries between soil layers are considered approximate based upon observed changes during the drilling operations or noted changes within representative samples.

Groundwater Observations were made to determine either the depth or elevation of water at the times indicated on the Soil Exploration Logs. The water so encountered may be groundwater or perched water. The depth or elevations indicated for water may fluctuate due to seasonal changes or other unknown factors.

Professional Service Industries, Inc.

SECTION 02225

EARTHWORK FOR ROADWAYS, RAILROADS, AND AIRFIELDS

PART 1 GENERAL

1.1 REFERENCES

The publications listed below form a part of this specification to the extent referenced. The publications are referred to in the text by basic designation only.

AMERICAN SOCIETY FOR TESTING AND MATERIALS (ASTM)

ASTM C 136	(1995a) Sieve Analysis of Fine and Coarse Aggregates
ASTM D 422	(1963; R 1990) Particle-Size Analysis of Soils
ASTM D 1140	(1992) Amount of Material in Soils Finer than the No. 200 (75-micrometer) Sieve
ASTM D 1556	(1990) Density and Unit Weight of Soil in Place by the Sand-Cone Method
ASTM D 1557	(1991) Laboratory Compaction Characteristics of Soil Using Modified Effort (56,000 ft-lbf/cu. ft. (2,700 kN-m/cu. m.))
ASTM D 2167	(1994) Density and Unit Weight of Soil in Place by the Rubber Balloon Method
ASTM D 2487	(1993) Classification of Soils for Engineering Purposes (Unified Soil Classification System)
ASTM D 2922	(1991) Density of Soil and Soil-Aggregate in Place by Nuclear Methods (Shallow Depth)
ASTM D 2937	(1994) Density of Soil in Place by the Drive-Cylinder Method
ASTM D 3017	(1988; R 1993) Water Content of Soil and Rock in Place by Nuclear Methods (Shallow Depth)
ASTM D 4318	(1993) Liquid Limit, Plastic Limit, and Plasticity Index of Soils

1.2 NOT USED

1.3 NOT USED

1.4 DEFINITIONS

1.4.1 Satisfactory Materials

Satisfactory materials shall comprise any materials classified by, ASTM D 2487 as GW, GP, GC, GM, SP, SM, and SW. Satisfactory materials for grading shall be free from roots and other organic matter, trash, debris, and frozen materials and stones larger than 150 mm in any dimension.

1.4.2 Unsatisfactory Materials

Materials which do not comply with the requirements for satisfactory materials are unsatisfactory. Materials classified in ASTM D 2487 as Pt, MH, CL, CH, ML, SC, OH, and OL are unsatisfactory. Unsatisfactory materials also include man-made fills, refuse, or backfills from previous construction.

1.4.3 Cohesionless and Cohesive Materials

Cohesionless materials include materials classified in ASTM D 2487 as GW, GP, SW, and SP. Cohesive materials include materials classified as GC, SC, ML, CL, MH, and CH. Materials classified as GM and SM will be identified as cohesionless only when the fines are nonplastic. Testing required for classifying materials shall be in accordance with ASTM D 4318, ASTM C 136, ASTM D 422, and ASTM D 1140.

1.4.4 Degree of Compaction

Degree of compaction required is expressed as a percentage of the maximum density obtained by the test procedure presented in ASTM D 1557 abbreviated as a percent of laboratory maximum density.

1.4.5 NOT USED

1.4.6 Topsoil

Material suitable for topsoils obtained from offsite areas or excavations.

1.5 SUBMITTALS

Government approval is required for submittals with a "GA" designation; submittals having an "FIO" designation are for information only. The following shall be submitted in accordance with Section 01330 SUBMITTAL PROCEDURES:

SD-08 Statements

Earthwork; GA.

Procedure and location for disposal of unused satisfactory material. Proposed source of borrow material. Proof of origin of borrow material demonstrating the material is non-contaminated.

SD-09 Reports

Testing; FIO.

Within 24 hours of conclusion of physical tests, 6 copies of test results,

including calibration curves and results of calibration tests.

SD-13 Certificates

Testing; FIO.

Qualifications of the commercial testing laboratory or Contractor's testing facilities.

1.6 SUBSURFACE DATA

Subsurface soil boring logs are shown on the drawings. The subsoil investigation report is included at the end of Section 02221, EXCAVATION, FILLING AND BACKFILLING FOR BUILDINGS. These data represent the best subsurface information available; however, variations may exist in the subsurface between boring locations.

1.7 CLASSIFICATION OF EXCAVATION

No consideration will be given to the nature of the materials, and all excavation will be designated as unclassified excavation.

1.8 NOT USED

1.9 UTILIZATION OF EXCAVATED MATERIALS

Unsatisfactory materials removed from excavations shall be disposed of in waste disposal or spoil areas located off government property. Satisfactory material removed from excavations shall be used, insofar as practicable, in the construction of fills, embankments, subgrades, shoulders, bedding (as backfill), and for similar purposes. No satisfactory excavated material shall be wasted without specific written authorization. Satisfactory material authorized to be wasted shall be disposed of in areas located off government property approved for surplus material storage or designated waste areas. No excavated material shall be disposed of to obstruct the flow of any stream, endanger a partly finished structure, impair the efficiency or appearance of any structure, or be detrimental to the completed work in any way.

PART 2 PRODUCTS (Not Applicable)

PART 3 EXECUTION

3.1 STRIPPING OF TOPSOIL

Where indicated or directed, topsoil shall be stripped to a minimal depth of 150 millimeters. Topsoil shall be spread on areas already graded and prepared for topsoil, or transported and deposited in stockpiles convenient to areas that are to receive application of the topsoil later, or at locations indicated or specified. Topsoil shall be kept separate from other excavated materials, brush, litter, objectionable weeds, roots, stones larger than 50 mm in diameter, and other materials that would interfere with planting and maintenance operations. Any surplus of topsoil from excavations and grading shall be removed from the site. All soils stockpiled are subjected to erosion and sediment control measures.

3.2 EXCAVATION

The Contractor shall perform excavation of every type of material

encountered within the limits of the project to the lines, grades, and elevations indicated and as specified. Grading shall be in conformity with the typical sections shown and the tolerances specified in paragraph FINISHING. Satisfactory excavated materials shall be transported to and placed in fill or embankment within the limits of the work. Unsatisfactory materials encountered within the limits of the work shall be excavated below grade and replaced with satisfactory materials as directed. Such excavated material and the satisfactory material ordered as replacement shall be included in excavation. Surplus satisfactory excavated material not required for fill or embankment shall be disposed of in areas located off government property approved for surplus material storage or waste areas. Unsatisfactory excavated material shall be disposed of in waste or spoil areas located off government property. During construction, excavation and fill shall be performed in a manner and sequence that will provide proper drainage at all times. Material required for fill or embankment in excess of that produced by excavation within the grading limits shall be excavated from approved areas located off government property selected by the Contractor.

3.2.1 Ditches and Swales

Excavation of ditches and swales shall be accomplished by cutting accurately to the cross sections, grades, and elevations shown. Ditches shall not be excavated below grades shown. Excessive open ditch excavation shall be backfilled with satisfactory, thoroughly compacted, material or with suitable stone or cobble to grades shown. Material excavated shall be disposed of as shown or as directed, except that in no case shall material be deposited less than 1 meter from the edge of a ditch. The Contractor shall maintain excavations free from detrimental quantities of leaves, brush, sticks, trash, and other debris until final acceptance of the work.

3.2.2 Drainage Structures

Excavations shall be made to the lines, grades, and elevations shown, or as directed. Trenches and foundation pits shall be of sufficient size to permit the placement and removal of forms for the full length and width of structure footings and foundations as shown. Rock or other hard foundation material shall be cleaned of loose debris and cut to a firm, level, stepped, or serrated surface. Loose disintegrated rock and thin strata shall be removed. When concrete or masonry is to be placed in an excavated area, the bottom of the excavation shall not be disturbed. Excavation to the final grade level shall not be made until just before the concrete or masonry is to be placed.

3.3 SELECTION OF BORROW MATERIAL

Borrow material shall be selected to meet the requirements and conditions of the particular fill or embankment for which it is to be used. Borrow material shall be obtained from approved off government property sources, selected by the Contractor. Unless otherwise provided in the contract, the Contractor shall obtain from the owners the right to procure material, pay royalties and other charges involved, and bear the expense of developing the sources, including rights-of-way for hauling. The Contractor shall provide proof of origin of the borrow material to demonstrate non-contaminated material is provided. Necessary clearing, grubbing, and satisfactory drainage of borrow pits and the disposal of debris thereon shall be considered related operations to the borrow excavation.

3.4 OPENING AND DRAINAGE OF EXCAVATION AND BORROW PITS

Except as otherwise permitted, borrow pits and other excavation areas shall be excavated providing adequate drainage. Overburden and other spoil material shall be transported to approved off government property spoil areas. Borrow pits shall be neatly trimmed and drained after the excavation is completed. The Contractor shall ensure that excavation of any area, operation of borrow pits, or dumping of spoil material results in minimum detrimental effects on natural environmental conditions in full compliance with applicable erosion and sediment control measures.

3.5 GRADING AREAS

Where indicated, work will be divided into grading areas within which satisfactory excavated material shall be placed in embankments, fills, and required backfills. The Contractor shall not haul satisfactory material excavated in one grading area to another grading area except when so directed in writing.

3.6 BACKFILL

Backfill adjacent to any and all types of structures shall be placed and compacted to at least 95 percent laboratory maximum density for cohesive materials or 95 percent laboratory maximum density for cohesionless materials to prevent wedging action or eccentric loading upon or against the structure. Ground surface on which backfill is to be placed shall be prepared as specified in paragraph PREPARATION OF GROUND SURFACE FOR EMBANKMENTS. Compaction requirements for backfill materials shall also conform to the applicable portions of paragraphs PREPARATION OF GROUND SURFACE FOR EMBANKMENTS, EMBANKMENTS, and SUBGRADE PREPARATION, and Section 02720 STORM-DRAINAGE SYSTEM; and Section 02316 EXCAVATION, TRENCHING, AND BACKFILLING FOR UTILITIES SYSTEMS. Compaction shall be accomplished by sheepsfoot rollers, pneumatic-tired rollers, steel-wheeled rollers, vibratory compactors, or other approved equipment well suited to the type of material being compacted.

3.7 PREPARATION OF GROUND SURFACE FOR EMBANKMENTS

Ground surface on which fill is to be placed shall be stripped of live, dead, or decayed vegetation, rubbish, debris, and other unsatisfactory material; plowed, disked, or otherwise broken; pulverized; moistened or aerated as necessary; thoroughly mixed; and compacted to at least 90 percent laboratory maximum density for cohesive materials or 95 percent laboratory maximum density for cohesionless materials. Compaction shall be accomplished by sheepsfoot rollers, pneumatic-tired rollers, steel-wheeled rollers, vibratory compactors, or other approved equipment. The prepared ground surface shall be scarified and moistened or aerated as required just prior to placement of embankment materials to assure adequate bond between embankment material and the prepared ground surface.

3.8 EMBANKMENTS

3.8.1 Earth Embankments

Earth embankments shall be constructed from satisfactory materials free of organic or frozen material and rocks with any dimension greater than 75 mm. The material shall be placed in successive horizontal layers of loose material not more than 200 millimeters in depth. Each layer shall be spread uniformly on a soil surface that has been moistened or aerated as necessary and scarified or otherwise broken up in such a manner that the

fill will bond with the surface on which it is placed. After spreading, each layer shall be plowed, disked, or otherwise broken up; moistened or aerated as necessary; thoroughly mixed; and compacted to at least 90 percent laboratory maximum density for cohesive materials or 95 percent laboratory maximum density for cohesionless materials. Compaction requirements for the upper portion of earth embankments forming subgrade for pavements shall be identical with those requirements specified in paragraph SUBGRADE PREPARATION. Compaction shall be accomplished by sheepsfoot rollers, pneumatic-tired rollers, steel-wheeled rollers, vibratory compactors, or other approved equipment well suited to the type of material being compacted.

3.9 SUBGRADE PREPARATION

3.9.1 Construction

Subgrade shall be shaped to line, grade, and cross section, and compacted as specified. This operation shall include plowing, disking, and any moistening or aerating required to obtain specified compaction. Soft or otherwise unsatisfactory material shall be removed and replaced with satisfactory excavated material or other approved material as directed. Rock encountered in the cut section shall be excavated to a depth of 150 mm below finished grade for the subgrade. Low areas resulting from removal of unsatisfactory material or excavation of rock shall be brought up to required grade with satisfactory materials, and the entire subgrade shall be shaped to line, grade, and cross section and compacted as specified. After rolling, the surface of the subgrade for roadways shall not show deviations greater than 6.25 millimeter when tested with a 3 meter straightedge applied both parallel and at right angles to the centerline of the area. The elevation of the finish subgrade shall not vary more than 15 mm from the established grade and cross section.

3.9.2 Compaction

Compaction shall be accomplished by sheepsfoot rollers, pneumatic-tired rollers, steel-wheeled rollers, vibratory compactors, or other approved equipment well suited to the type of material being compacted.

3.9.2.1 NOT USED

3.9.2.2 Subgrade for Pavements

Subgrade for pavements shall be compacted to at least 95 percentage laboratory maximum density for the depth 300 mm below the surface of the pavement shown.

3.10 NOT USED

3.11 FINISHING

The surface of excavations, embankments, and subgrades shall be finished to a smooth and compact surface in accordance with the lines, grades, and cross sections or elevations shown. The degree of finish for graded areas shall be within 30 mm of the grades and elevations indicated except that the degree of finish for subgrades shall be specified in paragraph SUBGRADE PREPARATION. Ditches and swales shall be finished in a manner that will result in effective drainage. The surface of areas to be turfed shall be finished to a smoothness suitable for the application of turfing materials.

3.12 PLACING TOPSOIL

On areas to receive topsoil, the compacted subgrade soil shall be scarified to a 50 mm depth for bonding of topsoil with subsoil. Topsoil then shall be spread evenly to a thickness of 150 mm and graded to the elevations and slopes shown. Topsoil shall not be spread when frozen or excessively wet or dry. Material required for topsoil in excess of that produced by excavation within the grading limits shall be obtained from offsite areas.

3.13 TESTING

Testing shall be performed by an approved commercial testing laboratory or by the Contractor subject to approval. If the Contractor elects to establish testing facilities, no work requiring testing will be permitted until the Contractor's facilities have been inspected and approved by the Contracting Officer. The first inspection be at the expense of the Government. Cost incurred for any subsequent inspections required because of failure of the first inspection will be charged to the Contractor. Field in-place density shall be determined in accordance with ASTM D 1556, ASTM D 2167 or ASTM D 2922. When ASTM D 2922 is used, the calibration curves shall be checked and adjusted using only the sand cone method as described in ASTM D 1556. ASTM D 2922 results in a wet unit weight of soil and when using this method ASTM D 3017 shall be used to determine the moisture content of the soil. The calibration curves furnished with the moisture gauges shall also be checked along with density calibration checks as described in ASTM D 3017; the calibration checks of both the density and moisture gauges shall be made at the beginning of a job on each different type of material encountered and at intervals as directed by the Contracting Officer. ASTM D 2937, the Drive Cylinder Method shall be used only for soft, fine-grained, cohesive soils. When test results indicate, as determined by the Contracting Officer, that compaction is not as specified, the material shall be removed, replaced and recompacted to meet specification requirements. Tests on recompacted areas shall be performed to determine conformance with specification requirements. Inspections and test results shall be certified by a registered professional civil engineer. These certifications shall state that the tests and observations were performed by or under the direct supervision of the engineer and that the results are representative of the materials or conditions being certified by the tests. The following number of tests, if performed at the appropriate time, will be the minimum acceptable for each type operation.

3.13.1 Fill and Backfill Material Gradation

One test per 700 cubic meters stockpiled or in-place source material. Gradation of fill and backfill material shall be determined in accordance with ASTM C 136.

3.13.2 In-Place Densities

a. One test per 200 square meters, or fraction thereof, of each lift of fill or backfill areas compacted by other than hand-operated machines.

b. One test per 200 square meters, or fraction thereof, of each lift of fill or backfill areas compacted by hand-operated machines.

c. One test per 30 linear meters, or fraction thereof, of each lift of embankment or backfill for roads.

3.13.3 Check Tests on In-Place Densities

If ASTM D 2922 is used, in-place densities shall be checked by ASTM D 1556 as follows:

a. One check test per lift for each 500 square meters, or fraction thereof, of each lift of fill or backfill compacted by other than hand-operated machines.

b. One check test per lift for each 500 square meters, of fill or backfill areas compacted by hand-operated machines.

c. One check test per lift for each 90 linear meters, or fraction thereof, of embankment or backfill for roads.

3.13.4 Moisture Contents

In the stockpile, excavation, or borrow areas, a minimum of two tests per day per type of material or source of material being placed during stable weather conditions shall be performed. During unstable weather, tests shall be made as dictated by local conditions and approved by the Contracting Officer.

3.13.5 Optimum Moisture and Laboratory Maximum Density

Tests shall be made for each type material or source of material including borrow material to determine the optimum moisture and laboratory maximum density values. One representative test per 200 cubic meters of fill and backfill, or when any change in material occurs which may affect the optimum moisture content or laboratory maximum density.

3.13.6 Tolerance Tests for Subgrades

Continuous checks on the degree of finish specified in paragraph SUBGRADE PREPARATION shall be made during construction of the subgrades.

3.14 SUBGRADE AND EMBANKMENT PROTECTION

During construction, embankments and excavations shall be kept shaped and drained. Ditches and drains along subgrade shall be maintained to drain effectively at all times. The finished subgrade shall not be disturbed by traffic or other operation and shall be protected and maintained by the Contractor in a satisfactory condition until subbase, base, or pavement is placed. The storage or stockpiling of materials on the finished subgrade will not be permitted. No subbase, base course, or pavement shall be laid until the subgrade has been checked and approved, and in no case shall subbase, base, surfacing, or pavement, be placed on a muddy, spongy, or frozen subgrade.

-- End of Section --

SECTION 02233

GRADED-CRUSHED-AGGREGATE BASE COURSE

PART 1 GENERAL

1.1 REFERENCES

The publications listed below form a part of this specification to the extent referenced. The publications are referred to in the text by basic designation only.

AMERICAN SOCIETY FOR TESTING AND MATERIALS (ASTM)

ASTM C 29	(1991a) Unit Weight and Voids in Aggregate
ASTM C 88	(1990) Soundness of Aggregates by Use of Sodium Sulfate or Magnesium Sulfate
ASTM C 117	(1995) Materials Finer Than 75 micrometer (No. 200) Sieve in Mineral Aggregates by Washing
ASTM C 131	(1989) Resistance to Degradation of Small-Size Coarse Aggregate by Abrasion and Impact in the Los Angeles Machine
ASTM C 136	(1995a) Sieve Analysis of Fine and Coarse Aggregates
ASTM D 75	(1987; R 1992) Sampling Aggregates
ASTM D 1556	(1990) Density and Unit Weight of Soil in Place by the Sand-Cone Method
ASTM D 1557	(1991) Laboratory Compaction Characteristics of Soil Using Modified Effort (56,000 ft-lbf/cu. ft. (2,700 kN-m/cu. m.))
ASTM D 2487	(1993) Classification of Soils for Engineering Purposes (Unified Soil Classification System)
ASTM D 2922	(1991) Density of Soil and Soil-Aggregate in Place by Nuclear Methods (Shallow Depth)
ASTM D 3017	(1988; R 1993) Water Content of Soil and Rock in Place by Nuclear Methods (Shallow Depth)
ASTM D 4318	(1993) Liquid Limit, Plastic Limit, and Plasticity Index of Soils
ASTM E 11	(1995) Wire-Cloth Sieves for Testing Purposes

ASTM E 548 (1994) General Criteria Used for Evaluating Laboratory Competence

1.2 NOT USED

1.3 NOT USED

1.4 SUBMITTALS

Government approval is required for submittals with a "GA" designation; submittals having an "FIO" designation are for information only. The following shall be submitted in accordance with Section 01330 SUBMITTAL PROCEDURES:

SD-09 Reports

Sampling and testing; GA.

Copies of field test results.

Waybills and Delivery Tickets; FIO.

Copies of waybills and delivery tickets during the progress of the work. Certified waybills and delivery tickets for all aggregates actually used.

1.5 DEGREE OF COMPACTION

Degree of compaction is a percentage of the maximum density obtained by the test procedure presented in ASTM D 1557. This will be abbreviated herein after as percentage of laboratory maximum density.

1.6 EQUIPMENT

1.6.1 Approval

All plant, equipment, and tools used in the performance of the work will be subject to approval before the work is started and shall be maintained in satisfactory working condition at all times. The equipment shall be adequate and shall have the capability of producing the required compaction, meeting grade controls, thickness control, and smoothness requirements as set forth herein.

1.6.2 Weather Limitation

Base courses shall be placed when the atmospheric temperature is above 2 degrees C. Areas of completed base course that are damaged by freezing, rainfall, or other weather conditions shall be corrected to meet specified requirement.

1.7 SAMPLING AND TESTING

Sampling and testing shall be the responsibility of the Contractor. Sampling and testing shall be performed by an approved commercial testing laboratory, or by the Contractor subject to approval. If the Contractor elects to establish testing facilities of his own, approval of such facilities shall be based on compliance with ASTM E 548, and no work requiring testing will be permitted until the Contractor's facilities have been inspected and approved. The first inspection of the facilities shall

be at the expense of the Government and any subsequent inspections required because of failure of the first inspection will be at the expense of the Contractor. Such costs will be deducted from the total amount due the Contractor. The materials shall be tested to establish compliance with the specified requirements. Copies of test results shall be furnished to the Contracting Officer.

1.7.1 Sampling

Sampling for material gradation, liquid limit, and plastic limit tests shall be taken in conformance with ASTM D 75. When deemed necessary, the sampling will be observed by the Contracting Officer.

1.7.2 Tests

The following tests shall be performed in conformance with the applicable standards listed.

1.7.2.1 Sieve Analyses

Sieve analyses shall be made in conformance with ASTM C 117 and ASTM C 136. Sieves shall conform to ASTM E 11.

1.7.2.2 Liquid Limit and Plasticity Index

Liquid limit and plasticity index shall be determined in accordance with ASTM D 4318.

1.7.2.3 Density Tests

Density shall be measured in the field in accordance with ASTM D 1556 or ASTM D 2922. For the method presented in ASTM D 1556 the base plate as shown in the drawing shall be used. For the method presented in ASTM D 2922 the calibration curves shall be checked and adjusted if necessary using only the sand cone method as described in paragraph Calibration of the ASTM publication. Tests performed in accordance with ASTM D 2922 results in a wet unit weight of soil and when using this method, ASTM D 3017 shall be used to determine the moisture content of the soil. The calibration curves furnished with the moisture gauges shall also be checked along with density calibration checks as described in ASTM D 3017. The calibration checks of both the density and moisture gauges shall be made by the prepared containers of material method, as described in paragraph Calibration of ASTM D 2922, on each different type of material being tested at the beginning of a job and at intervals as directed.

1.7.2.4 Soundness Test

Soundness tests shall be made in conformance with ASTM C 88.

1.7.2.5 Wear Test

Wear tests shall be made in conformance with ASTM C 131.

1.7.3 Approval of Material

The source of the material to be used for producing aggregates shall be selected 60 days prior to the time the material will be required in the work. Tentative approval of the source will be based on an inspection by the Contracting Officer. Tentative approval of material will be based on

tests of samples for the specific job. Final approval of both the source and the material will be based on tests for gradation, liquid limit, and plasticity index performed on samples taken from the completed and compacted subbase course.

PART 2 PRODUCTS

2.1 AGGREGATES

Aggregates shall consist of clean, sound, durable particles of crushed stone, crushed slag, or crushed gravel, and screenings. The Contractor shall obtain materials that meet the specification and can be used to meet the grade and smoothness requirements specified herein, after all compaction and proof-rolling operations have been completed. Slag shall be an air-cooled, blast-furnace product having a dry weight of not less than 1050 kg per cubic meter as determined by ASTM C 29. The aggregates shall be free of silt and clay as defined by ASTM D 2487, vegetable matter, and other objectionable materials or coatings. The portion retained on the 4.75 mm sieve shall be known as coarse aggregate; that portion passing the 4.75 mm sieve shall be known as fine aggregate.

2.1.1 Coarse Aggregates

Coarse aggregates shall be angular particles of uniform density. The coarse aggregate shall have a loss not greater than 40 percent weighted averaged at five cycles when tested for soundness in magnesium sulfate in accordance with ASTM C 88. The coarse aggregate shall have a percentage of wear not to exceed 45 after 500 revolutions as determined by ASTM C 131. The percentage of flat and/or elongated particles shall not exceed 20 in the fraction retained on the 13 mm sieve and in the fraction passing the 13 mm sieve. A flat particle is one having a ratio of width to thickness greater than 3; an elongated particle is one having a ratio of length to width greater than 3. When the coarse aggregate is supplied from more than one source, aggregate from each source shall meet the requirements set forth herein. Crushed gravel shall be manufactured from gravel particles 90 percent of which by weight are retained on the maximum-size sieve listed in TABLE I. In the portion retained on each sieve specified, the crushed gravel shall contain at least 90 percent by weight of crushed pieces having two or more freshly fractured faces with the area of each face being at least equal to 75 percent of the smallest midsectional area of the place. When two fractures are contiguous, the angle between planes of the fractures must be at least 30 degrees in order to count as two fractured faces.

2.1.2 Fine Aggregate

Fine aggregate shall be angular particles produced by crushing stone, slag, or gravel that meets the requirements for wear and soundness specified for coarse aggregate. Fine aggregate shall be produced by crushing only particles larger than 4.75 mm sieve in size. The fine aggregate shall contain at least 90 percent by weight of particles having two or more freshly fractured faces in the portion passing the 4.75 mm sieve and retained on the 2 mm sieve, and in the portion passing the 2 mm sieve and retained on the 0.425 mm sieve.

2.1.3 Gradation Requirements

Gradation requirements specified herein shall apply to the completed base course. The aggregates shall have a maximum size of 25 millimeter(s) and

be graded continuously well within the limits specified in TABLE I. Sieves shall conform to ASTM E 11.

TABLE I. GRADATION OF AGGREGATES

Percentage by Weight Passing Square-Mesh Sieve

Sieve Designation	No. 2
50.0 mm	__
37.5 mm	100
25 mm	60-100
12.5 mm	30-65
4.75 mm	20-50
2 mm	15-40
0.425 mm	5-25
0.075 mm	0-10

NOTE 1: Particles having diameters less than 0.02 mm shall not be in excess of 3 percent by weight of the total sample tested.

NOTE 2: The values are based on aggregates of uniform specific gravity, and the percentages passing the various sieves may require appropriate correction by the Contracting Officer when aggregates of varying specific gravities are used.

2.1.4 Liquid Limit and Plasticity Index

Liquid limit and plasticity index requirements stated herein shall apply to any aggregate component that is blended to meet the required gradation and also to the aggregate in the completed base course. The portion of the aggregate passing the 0.425 mm sieve shall be either nonplastic or have a liquid limit not greater than 25 and a plasticity index not greater than 5.

PART 3 EXECUTION

3.1 OPERATION OF AGGREGATE SOURCES

Clearing, stripping, and excavating shall be the responsibility of the Contractor. The aggregate sources shall be operated in such a manner as to produce the quantity and quality of base course materials meeting these specification requirements in the specified time limits. Upon completion of the work, the aggregate sources on Government reservations shall be conditioned to drain readily and be left in a satisfactory condition. Aggregate sources on private lands shall be conditioned in agreement with local laws or authorities.

3.2 STOCKPILING MATERIAL

Prior to stockpiling of material, storage sites shall be cleared and leveled by the Contractor. All materials, including approved material available from excavation and grading, shall be stockpiled in the manner and at the locations designated. Aggregates shall be stockpiled on the cleared and leveled areas designated by the Contracting Officer so as to prevent segregation. Materials obtained from different sources shall be stockpiled separately.

3.3 PREPARATION OF UNDERLYING COURSE

Prior to constructing the crushed-aggregate base course, the underlying course shall be cleaned of all foreign substances. At the time of construction of the base course, the underlying course shall contain no frozen material. The underlying course shall conform to Section 02225 EARTHWORK FOR ROADWAYS, RAILROADS, AND AIRFIELDS. Ruts or soft, yielding spots in the underlying courses, areas having inadequate compaction, and deviations of the surface from the requirements set forth herein shall be corrected by loosening and removing soft or unsatisfactory material and by adding approved material, reshaping to line and grade, and recompacting to specified density requirements. For cohesionless underlying courses containing sands or gravels as defined in ASTM D 2487 the surface shall be stabilized prior to placement of the graded-crushed-aggregate base course. Stabilization shall be accomplished by mixing graded-crushed-aggregate base material into the underlying course and compacting by approved methods. The stabilized material shall be considered as part of the underlying course and shall meet all requirements of the underlying course. The finished underlying course shall not be disturbed by traffic or other operations and shall be maintained by the Contractor in a satisfactory condition until the base course is placed.

3.4 GRADE CONTROL

During construction, the lines and grades including crown and cross slope indicated for the base course shall be maintained by means of line and grade stakes placed by the Contractor.

3.5 MIXING OF MATERIALS

The coarse and fine aggregates shall be mixed in a stationary plant, or in a traveling plant or bucket loader on an approved paved working area. The Contractor shall make such adjustments in mixing procedures or in equipment as may be directed to obtain true grades, to minimize segregation or degradation, to obtain the required water content, and to ensure a satisfactory base course meeting all requirements of this specification.

3.6 PLACING

The mixed material shall be placed on the prepared subgrade or subbase in layers of uniform thickness with an approved spreader. When a compacted layer 150 mm or less in thickness is required, the material shall be placed in a single layer. When a compacted layer in excess of 150 mm is required, the material shall be placed in layers of equal thickness. No layer shall exceed 150 mm or be less than 75 mm when compacted. The layers shall be so placed that when compacted they will be true to the grades or levels required with the least possible surface disturbance. Where the base course is placed in more than one layer, the previously constructed layers shall be cleaned of loose and foreign matter by sweeping with power sweepers, power brooms, or hand brooms, as directed. Such adjustments in placing procedures or equipment shall be made as may be directed to obtain true grades, to minimize segregation and degradation, to adjust the water content, and to ensure an acceptable base course.

3.7 COMPACTION

3.7.1 Requirements

Each layer of base course shall be compacted as specified to produce an

average field-measured density, through the full depth, of at least 100 percent of laboratory maximum density obtained in the laboratory. Water content shall be maintained during the compaction procedure and subsequent proof rolling of designated areas such that the water content is within plus or minus 2 percent of optimum water content as determined from laboratory tests as specified in density test procedures listed in paragraph SAMPLING AND TESTING. In all places not accessible to the rollers, the base course material shall be compacted with mechanical tampers.

3.7.2 Finishing

The surface of top layer of base course shall be finished after final compaction, and proof rolled, where required, by cutting any overbuild to grade and rolling with a steel-wheeled roller. In no case will thin layers of material be added to the top layer of base course to meet grade. If the elevation of top layer of base course is 13 mm or more below the grade, the top layer of base shall be scarified to a depth of at least 75 mm, new material shall be added, and the layer shall be blended and recompacted to bring to grade. Adjustments in rolling and finishing procedures shall be made as may be directed to obtain grades, to minimize segregation and degradation of base course material, to adjust the water content, and to insure an acceptable base course. Material found unacceptable shall be removed and replaced, as directed, with acceptable material.

3.8 PROOF ROLLING

Proof rolling of the areas designated shall be in addition to compaction specified above and shall consist of application of 30 coverages with a heavy pneumatic-tired roller having four tires abreast, with each tire loaded to 13.6 metric tons and tires inflated to 1.035 MPa. In the areas designated, proof rolling shall be applied to the top lift of layer on which the base course is laid and to each layer of the base course. Water content of the lift of the layer on which the base course is placed, and of each layer of the base course, shall be maintained at optimum, or at the percentage directed from the start of compaction to the completion of proof rolling. Materials in the base course or underlying materials indicated unacceptable by the proof rolling shall be removed and replaced, as directed, with acceptable materials.

3.9 EDGES OF BASE COURSE

Acceptable material shall be placed along the edges of the base course in such quantity as will compact to the thickness of the course being constructed. When the course is being constructed in two or more layers, at least a 0.30 m width of the shoulder shall be rolled and compacted simultaneously with the rolling and compacting of each layer of the base course, as directed.

3.10 SMOOTHNESS TEST

The surface of the top layer shall not deviate more than 9.5 mm when tested with a 3.05 m straightedge applied parallel with and at right angles to the centerline of the area to be paved. Deviations exceeding 9.5 mm shall be corrected as directed.

3.11 THICKNESS CONTROL

The completed thickness of the base course shall be within 13 mm of the

thickness indicated. The thickness of the base course shall be measured at intervals providing at least one measurement for at least each 400 square meters of base course. The depth measurement shall be made by test holes at least 75 mm in diameter. Where the measured thickness of the base course is more than 13 mm deficient, such areas shall be corrected by excavating to the required depth and replacing with new material. Where the measured thickness of the base course is 13 mm more than indicated, it will be considered as conforming with the requirements plus 13 mm, provided the surface of the base course is within 13 mm of established grade. The average job thickness shall be the average of the job measurements as specified above but within 6 mm of the thickness indicated.

3.12 MAINTENANCE

The base course shall be maintained in a condition that will meet all specification requirements until accepted.

-- End of Section --

SECTION 02316

EXCAVATION, TRENCHING, AND BACKFILLING FOR UTILITIES SYSTEMS

PART 1 GENERAL

1.1 REFERENCES

The publications listed below form a part of this specification to the extent referenced. The publications are referred to in the text by basic designation only.

AMERICAN SOCIETY FOR TESTING AND MATERIALS (ASTM)

ASTM D 422	(1963; R 1990) Particle-Size Analysis of Soils
ASTM D 1556	(1990; R 1996) Density and Unit Weight of Soil in Place by the Sand-Cone Method
ASTM D 1557	(1991) Laboratory Compaction Characteristics of Soil Using Modified Effort (56,000 ft-lbf/cu. ft. (2,700 kN-m/cu. m.))
ASTM D 2167	(1994) Density and Unit Weight of Soil in Place by the Rubber Balloon Method
ASTM D 2487	(1993) Classification of Soils for Engineering Purposes (Unified Soil Classification System)
ASTM D 2922	(1996) Density of Soil and Soil-Aggregate in Place by Nuclear Methods (Shallow Depth)
ASTM D 3017	(1988; R 1993) Water Content of Soil and Rock in Place by Nuclear Methods (Shallow Depth)

1.2 NOT USED

1.3 DEGREE OF COMPACTION

Degree of compaction shall be expressed as a percentage of the maximum density obtained by the test procedure presented in ASTM D 1557.

1.4 SUBMITTALS

Government approval is required for submittals with a "GA" designation; submittals having an "FIO" designation are for information only. The following shall be submitted in accordance with Section 01330 SUBMITTAL PROCEDURES:

SD-09 Reports

Field Density Tests; FIO. Testing of Backfill Materials; FIO.

Copies of all laboratory and field test reports within 24 hours of the completion of the test.

PART 2 PRODUCTS

2.1 MATERIALS

2.1.1 Satisfactory Materials

Satisfactory materials shall consist of any material classified by ASTM D 2487 as GW, GP, GC, GM, SP, SM, CL, and SW.

2.1.2 Unsatisfactory Materials

Unsatisfactory materials shall be materials that do not comply with the requirements for satisfactory materials. Unsatisfactory materials include, but are not limited to, those materials containing roots and other organic matter, trash, debris, frozen materials and stones larger than 75 millimeters, and materials classified in ASTM D 2487, as PT, MH, CH, ML, SC, OH, and OL. Unsatisfactory materials also include man-made fills, refuse, or backfills from previous construction.

2.1.3 Cohesionless and Cohesive Materials

Cohesionless materials shall include materials classified in ASTM D 2487 as GW, GP, SW, and SP. Cohesive materials shall include materials classified as GC, SC, ML, CL, MH, and CH. Materials classified as GM and SM shall be identified as cohesionless only when the fines are nonplastic.

2.1.4 Rock

Rock shall consist of boulders measuring 1/2 cubic meter or more and materials that cannot be removed without systematic drilling and blasting such as rock material in ledges, bedded deposits, unstratified masses and conglomerate deposits, and below ground concrete or masonry structures, exceeding 1/2 cubic meter in volume, except that pavements shall not be considered as rock.

2.1.5 Unyielding Material

Unyielding material shall consist of rock and gravelly soils with stones greater than 75 millimeters in any dimension or as defined by the pipe manufacturer, whichever is smaller.

2.1.6 Unstable Material

Unstable material shall consist of materials too wet to properly support the utility pipe, conduit, or appurtenant structure.

2.1.7 Select Granular Material

Select granular material shall consist of well-graded sand, gravel, crushed gravel, crushed stone or crushed slag composed of hard, tough and durable particles, and shall contain not more than 10 percent by weight of material passing a 0.075 mm mesh sieve and no less than 95 percent by weight passing the 25 mm sieve. The maximum allowable aggregate size shall be 25 millimeters, or the maximum size recommended by the pipe manufacturer,

whichever is smaller.

2.1.8 Initial Backfill Material

Initial backfill shall consist of select granular material or satisfactory materials free from rocks 25 millimeters or larger in any dimension or free from rocks of such size as recommended by the pipe manufacturer, whichever is smaller. When the pipe is coated or wrapped for corrosion protection, the initial backfill material shall be free of stones larger than 25 millimeters in any dimension or as recommended by the pipe manufacturer, whichever is smaller.

2.2 PLASTIC MARKING TAPE

Plastic marking tape shall be acid and alkali-resistant polyethylene film, 152 mm (6 inches) wide with minimum thickness of 0.102 mm (0.004 inch). Tape shall have a minimum strength of 12.1 MPa (1750 psi) lengthwise and 10.3 MPa (1500 psi) crosswise. The tape shall be manufactured with integral wires, foil backing or other means to enable detection by a metal detector when the tape is buried up to 1 meter deep. The tape shall be of a type specifically manufactured for marking and locating underground utilities. The metallic core of the tape shall be encased in a protective jacket or provided with other means to protect it from corrosion. Tape color shall be as specified in TABLE 1 and shall bear a continuous printed inscription describing the specific utility.

TABLE 1. Tape Color

Red:	Electric
Yellow:	Gas, Oil, Dangerous Materials
Orange:	Telephone, Telegraph, Television, Police, and Fire Communications
Blue:	Water Systems
Green:	Sewer Systems

PART 3 EXECUTION

3.1 EXCAVATION

Excavation shall be performed to the lines and grades indicated. Rock excavation shall include removal and disposition of material defined as rock in paragraph MATERIALS. Earth excavation shall include removal and disposal of material not classified as rock excavation. During excavation, material satisfactory for backfilling shall be stockpiled in an orderly manner at a distance from the banks of the trench equal to 1/2 the depth of the excavation, but in no instance closer than 600 mm. Excavated material not required or not satisfactory for backfill shall be removed from the site. Grading shall be done as may be necessary to prevent surface water from flowing into the excavation, and any water accumulating therein shall be removed to maintain the stability of the bottom and sides of the excavation. Unauthorized overexcavation shall be backfilled in accordance with paragraph BACKFILLING AND COMPACTION at no additional cost to the Government.

3.1.1 Trench Excavation

The trench shall be excavated as recommended by the manufacturer of the pipe to be installed. Trench walls below the top of the pipe shall be sloped, or made vertical, and of such width as recommended in the

manufacturer's installation manual. Where no manufacturer's installation manual is available, trench walls shall be made vertical. Trench walls more than 1.5 meters high shall be shored, cut back to a stable slope, or provided with equivalent means of protection for employees who may be exposed to moving ground or cave in. Vertical trench walls more than 1.5 meters high shall be shored. Trench walls which are cut back shall be excavated to at least the angle of repose of the soil. Special attention shall be given to slopes which may be adversely affected by weather or moisture content. The trench width below the top of pipe shall not exceed 600 mm (24 inches) plus pipe outside diameter (O.D.) for pipes of less than 600 mm (24 inches) inside diameter and shall not exceed 900 mm (36 inches) plus pipe outside diameter for sizes larger than 600 mm (24 inches) inside diameter. Where recommended trench widths are exceeded, redesign, stronger pipe, or special installation procedures shall be utilized by the Contractor. The cost of redesign, stronger pipe, or special installation procedures shall be borne by the Contractor without any additional cost to the Government.

3.1.1.1 Bottom Preparation

The bottoms of trenches shall be accurately graded to provide uniform bearing and support for the bottom quadrant of each section of the pipe. Bell holes shall be excavated to the necessary size at each joint or coupling to eliminate point bearing. Stones of 75 millimeters or greater in any dimension, or as recommended by the pipe manufacturer, whichever is smaller, shall be removed to avoid point bearing.

3.1.1.2 Removal of Unyielding Material

Where unyielding material is encountered in the bottom of the trench, such material shall be removed 100 millimeters below the required grade and replaced with suitable materials as provided in paragraph BACKFILLING AND COMPACTION.

3.1.1.3 Removal of Unstable Material

Where unstable material is encountered in the bottom of the trench, such material shall be removed to the depth directed and replaced to the proper grade with select granular material as provided in paragraph BACKFILLING AND COMPACTION. When removal of unstable material is required due to the Contractor's fault or neglect in performing the work, the resulting material shall be excavated and replaced by the Contractor without additional cost to the Government.

3.1.1.4 Excavation for Appurtenances

Excavation for manholes, catch-basins, inlets, or similar structures shall be of sufficient size to permit the placement and removal of forms for the full length and width of structure footings and foundations as shown. Rock shall be cleaned of loose debris and cut to a firm surface either level, stepped, or serrated, as shown or as directed. Loose disintegrated rock and thin strata shall be removed. Removal of unstable material shall be as specified above. When concrete or masonry is to be placed in an excavated area, special care shall be taken not to disturb the bottom of the excavation. Excavation to the final grade level shall not be made until just before the concrete or masonry is to be placed.

3.1.1.5 Jacking, Boring, and Tunneling

Unless otherwise indicated, excavation shall be by open cut except that sections of a trench may be jacked, bored, or tunneled if, in the opinion of the Contracting Officer, the pipe, cable, or duct can be safely and properly installed and backfill can be properly compacted in such sections.

3.1.2 Stockpiles

Stockpiles of satisfactory materials shall be placed and graded as specified in accordance with applicable erosion and sediment control measures. Stockpiles shall be kept in a neat and well drained condition, giving due consideration to drainage at all times. The ground surface at stockpile locations shall be cleared, grubbed, and sealed by rubber-tired equipment, excavated satisfactory and unsatisfactory materials shall be separately stockpiled. Stockpiles of satisfactory materials shall be protected from contamination which may destroy the quality and fitness of the stockpiled material. If the Contractor fails to protect the stockpiles, and any material becomes unsatisfactory, such material shall be removed and replaced with satisfactory material from approved sources at no additional cost to the Government. Locations of stockpiles of satisfactory materials shall be subject to prior approval of the Contracting Officer.

3.2 BACKFILLING AND COMPACTION

Backfill material shall consist of satisfactory material, select granular material, or initial backfill material as required. Backfill shall be placed in layers not exceeding 150 mm loose thickness for compaction by hand operated machine compactors, and 200 mm loose thickness for other than hand operated machines, unless otherwise specified. Each layer shall be compacted to at least 95 percent maximum density for cohesionless soils and 90 percent maximum density for cohesive soils, unless otherwise specified.

3.2.1 Trench Backfill

Trenches shall be backfilled to the grade shown. The trench shall be backfilled to 0.6 meters above the top of pipe prior to performing the required pressure tests. The joints and couplings shall be left uncovered during the pressure test. The trench shall not be backfilled until all specified tests are performed.

3.2.1.1 Replacement of Unyielding Material

Unyielding material removed from the bottom of the trench shall be replaced with select granular material or initial backfill material.

3.2.1.2 Replacement of Unstable Material

Unstable material removed from the bottom of the trench or excavation shall be replaced with select granular material placed in layers not exceeding 150 mm loose thickness.

3.2.1.3 Bedding and Initial Backfill

Bedding shall be of the type and thickness shown. Initial backfill material shall be placed and compacted with approved tampers to a height of at least one foot above the utility pipe or conduit. The backfill shall be brought up evenly on both sides of the pipe for the full length of the pipe. Care shall be taken to ensure thorough compaction of the fill under the haunches of the pipe.

3.2.1.4 Final Backfill

The remainder of the trench, except for special materials for roadways, railroads and airfields, shall be filled with satisfactory material. Backfill material shall be placed and compacted as follows:

a. Roadways, Railroads, and Airfields: Backfill shall be placed up to the elevation at which the requirements in Section 02225 EARTHWORK FOR ROADWAYS, RAILROADS, AND AIRFIELDS control. Water flooding or jetting methods of compaction will not be permitted.

b. Sidewalks, Turfed or Seeded Areas and Miscellaneous Areas: Backfill shall be deposited in layers of a maximum of 300 mm loose thickness, and compacted to 85 percent maximum density for cohesive soils and 90 percent maximum density for cohesionless soils. Compaction by water flooding or jetting will not be permitted. This requirement shall also apply to all other areas not specifically designated above.

3.2.2 Backfill for Appurtenances

After the manhole, catch basin, inlet, or similar structure has been constructed and the concrete has been allowed to cure for 7 days, backfill shall be placed in such a manner that the structure will not be damaged by the shock of falling earth. The backfill material shall be deposited and compacted as specified for final backfill, and shall be brought up evenly on all sides of the structure to prevent eccentric loading and excessive stress.

3.3 SPECIAL REQUIREMENTS

Special requirements for both excavation and backfill relating to the specific utilities are as follows:

3.3.1 Gas Distribution

Trenches shall be excavated to a depth that will provide not less than 450 mm of cover in rock excavation and not less than 600 mm of cover in other excavation. Trenches shall be graded as specified for pipe-laying requirements in Section 02685 GAS DISTRIBUTION SYSTEM.

3.3.2 Water Lines

Trenches shall be of a depth to provide a minimum cover of 1.5 meters from the existing ground surface, or from the indicated finished grade, whichever is lower, to the top of the pipe.

3.3.3 NOT USED

3.3.4 Electrical Distribution System

Direct burial cable and conduit or duct line shall have a minimum cover of 600 mm from the finished grade, unless otherwise indicated.

3.3.5 Plastic Marking Tape

Warning tapes shall be installed directly above the pipe, at a depth of 300 millimeters below finished grade unless otherwise shown.

3.4 TESTING

Testing shall be the responsibility of the Contractor and shall be performed at no additional cost to the Government.

3.4.1 Testing Facilities

Tests shall be performed by an approved commercial testing laboratory or may be tested by facilities furnished by the Contractor. No work requiring testing will be permitted until the facilities have been inspected and approved by the Contracting Officer. The first inspection shall be at the expense of the Government. Cost incurred for any subsequent inspection required because of failure of the first inspection will be charged to the Contractor.

3.4.2 Testing of Backfill Materials

Characteristics of backfill materials shall be determined in accordance with particle size analysis of soils ASTM D 422 and moisture-density relations of soils ASTM D 1557. A minimum of one particle size analysis and one moisture-density relation test shall be performed on each different type of material used for bedding and backfill.

3.4.3 Field Density Tests

Tests shall be performed in sufficient numbers to ensure that the specified density is being obtained. A minimum of one field density test per lift of backfill for every 90 meters of installation shall be performed. One moisture density relationship shall be determined for every 1500 cubic meters of material used. Field in-place density shall be determined in accordance with ASTM D 1556, ASTM D 2167, or ASTM D 2922. When ASTM D 2922 is used, the calibration curves shall be checked and adjusted using the sand cone method as described in paragraph Calibration of the ASTM publication. ASTM D 2922 results in a wet unit weight of soil and when using this method, ASTM D 3017 shall be used to determine the moisture content of the soil. The calibration curves furnished with the moisture gauges shall be checked along with density calibration checks as described in ASTM D 3017. The calibration checks of both the density and moisture gauges shall be made at the beginning of a job, on each different type of material encountered, at intervals as directed by the Contracting Officer. Copies of calibration curves, results of calibration tests, and field and laboratory density tests shall be furnished to the Contracting Officer. Trenches improperly compacted shall be reopened to the depth directed, then refilled and compacted to the density specified at no additional cost to the Government.

3.4.4 Displacement of Sewers

After other required tests have been performed and the trench backfill compacted to 0.6 meters above the top of the pipe, the pipe shall be inspected to determine whether significant displacement has occurred. This inspection shall be conducted in the presence of the Contracting Officer. Pipe sizes larger than 900 mm (36 inches) shall be entered and examined, while smaller diameter pipe shall be inspected by shining a light or laser between manholes or manhole locations, or by the use of television cameras passed through the pipe. If, in the judgement of the Contracting Officer, the interior of the pipe shows poor alignment or any other defects that would cause improper functioning of the system, the defects shall be remedied as directed at no additional cost to the Government.

-- End of Section --

SECTION 02511

CONCRETE SIDEWALKS AND CURBS AND GUTTERS

PART 1 GENERAL

1.1 REFERENCES

The publications listed below form a part of this specification to the extent referenced. The publications are referred to in the text by basic designation only.

AMERICAN ASSOCIATION OF STATE HIGHWAY AND TRANSPORTATION OFFICIALS (AASHTO)

AASHTO M 182	(1991) Burlap Cloth Made from Jute or Kenaf

AMERICAN SOCIETY FOR TESTING AND MATERIALS (ASTM)

ASTM A 185	(1994) Steel Welded Wire Fabric, Plain, for Concrete Reinforcement
ASTM A 615	(1996) Deformed and Plain Billet-Steel Bars for Concrete Reinforcement
ASTM A 616	(1996) Rail-Steel Deformed and Plain Bars for Concrete Reinforcement
ASTM A 617	(1996) Axle-Steel Deformed and Plain Bars for Concrete Reinforcement
ASTM C 31	(1996) Making and Curing Concrete Test Specimens in the Field
ASTM C 143	(1990a) Slump of Hydraulic Cement Concrete
ASTM C 171	(1995) Sheet Materials for Curing Concrete
ASTM C 172	(1990) Sampling Freshly Mixed Concrete
ASTM C 173	(1994) Air Content of Freshly Mixed Concrete by the Volumetric Method
ASTM C 231	(1991b) Air Content of Freshly Mixed Concrete by the Pressure Method
ASTM C 309	(1995) Liquid Membrane-Forming Compounds for Curing Concrete
ASTM D 1751	(1983; R 1991) Preformed Expansion Joint Filler for Concrete Paving and Structural Construction (Nonextruding and Resilient Bituminous Types)
ASTM D 1752	(1984; R 1992) Preformed Sponge Rubber and Cork Expansion Joint Fillers for Concrete

Paving and Structural Construction

ASTM D 3405 (1994) Joint Sealants, Hot-Applied, for Concrete and Asphalt Pavements

CORPS OF ENGINEERS (COE)

COE CRD-C 527 (1988) Standard Specification for Joint Sealants, Cold-Applied, Non-Jet-Fuel-Resistant, for Rigid and Flexible Pavements

1.2 NOT USED

1.3 NOT USED

1.4 SUBMITTALS

Government approval is required for submittals with a "GA" designation; submittals having an "FIO" designation are for information only. The following shall be submitted in accordance with Section 01330 SUBMITTAL PROCEDURES:

SD-09 Reports

Field Quality Control; FIO.

Copies of all test reports within 24 hours of completion of the test.

SD-18 Records

Concrete; GA.

Copies of certified delivery tickets for all concrete used in the construction.

1.5 WEATHER LIMITATIONS

1.5.1 Placing During Cold Weather

Concrete placement shall be discontinued when the air temperature reaches 5 degrees C and is falling. Placement may begin when the air temperature reaches 2 degrees C and is rising. Provisions shall be made to protect the concrete from freezing during the specified curing period. If necessary to place concrete when the temperature of the air, aggregates, or water is below 2 degrees C, placement shall be approved in writing. Approval shall be contingent upon full conformance with the following provisions. The underlying material shall be prepared and protected so that it is entirely free of frost when the concrete is deposited. Mixing water and aggregates shall be heated as necessary to result in the temperature of the in-place concrete being between 10 and 30 degrees C. Methods and equipment for heating shall be approved. The aggregates shall be free of ice, snow, and frozen lumps before entering the mixer. Covering and other means shall be provided for maintaining the concrete at a temperature of at least 10 degrees C for not less than 72 hours after placing, and at a temperature above freezing for the remainder of the curing period.

1.5.2 Placing During Warm Weather

The temperature of the concrete as placed shall not exceed 30 degrees C except where an approved retarder is used. The mixing water and/or aggregates shall be cooled, if necessary, to maintain a satisfactory placing temperature. In no case shall the placing temperature exceed 35 degrees C.

1.6 PLANT, EQUIPMENT, MACHINES, AND TOOLS

1.6.1 General Requirements

Plant, equipment, machines, and tools used in the work shall be subject to approval and shall be maintained in a satisfactory working condition at all times. The equipment shall have the capability of producing the required product, meeting grade controls, thickness control and smoothness requirements as specified. Use of the equipment shall be discontinued if it produces unsatisfactory results. The Contracting Officer shall have access at all times to the plant and equipment to ensure proper operation and compliance with specifications.

1.6.2 Slip Form Equipment

Slip form paver or curb forming machine, will be approved based on trial use on the job and shall be self-propelled, automatically controlled, crawler mounted, and capable of spreading, consolidating, and shaping the plastic concrete to the desired cross section in one pass.

PART 2 PRODUCTS

2.1 CONCRETE

Concrete shall conform to the applicable requirements of Section 03300 CAST-IN-PLACE STRUCTURAL CONCRETE except as otherwise specified. Concrete shall have a minimum compressive strength of 24 MPa at 28 days. Maximum size of aggregate shall be 25 mm.

2.1.1 Air Content

Mixtures shall have air content by volume of concrete of 5 to 7 percent, based on measurements made immediately after discharge from the mixer.

2.1.2 Slump

The concrete slump shall be 50 millimeters plus or minus 25 millimeters where determined in accordance with ASTM C 143.

2.1.3 Reinforcement Steel

Reinforcement bars shall conform to ASTM A 615, ASTM A 616, or ASTM A 617. Wire mesh reinforcement shall conform to ASTM A 185.

2.2 CONCRETE CURING MATERIALS

2.2.1 Impervious Sheet Materials

Impervious sheet materials shall conform to ASTM C 171, type optional, except that polyethylene film, if used, shall be white opaque.

2.2.2 Burlap

Burlap shall conform to AASHTO M 182.

2.2.3 White Pigmented Membrane-Forming Curing Compound

White pigmented membrane-forming curing compound shall conform to ASTM C 309, Type 2.

2.3 CONCRETE PROTECTION MATERIALS

Concrete protection materials shall be a linseed oil mixture of equal parts, by volume, of linseed oil and either mineral spirits, naphtha, or turpentine. At the option of the contractor, commercially prepared linseed oil mixtures, formulated specifically for application to concrete to provide protection against the action of deicing chemicals may be used, except that emulsified mixtures are not acceptable.

2.4 JOINT FILLER STRIPS

2.4.1 Contraction Joint Filler for Curb and Gutter

Contraction joint filler for curb and gutter shall consist of hard-pressed fiberboard.

2.4.2 Expansion Joint Filler, Premolded

Expansion joint filler, premolded, shall conform to ASTM D 1751 or ASTM D 1752, 9.5 mm (3/8 inch) thick, unless otherwise indicated.

2.5 JOINT SEALANTS

2.5.1 Joint Sealant, Cold-Applied

Joint sealant, cold-applied shall conform to COE CRD-C 527.

2.5.2 Joint Sealant, Hot-Poured

Joint sealant, hot-poured shall conform to ASTM D 3405.

2.6 FORM WORK

Form work shall be designed and constructed to insure that the finished concrete will conform accurately to the indicated dimensions, lines, and elevations, and within the tolerances specified. Forms shall be of wood or steel, straight, of sufficient strength to resist springing during depositing and consolidating concrete. Wood forms shall be surfaced plank, 50 mm (2-inch) nominal thickness, straight and free from warp, twist, loose knots, splits or other defects. Wood forms shall have a nominal length of 3 m (10 feet). Radius bends may be formed with 19 mm (3/4-inch) boards, laminated to the required thickness. Steel forms shall be channel-formed sections with a flat top surface and with welded braces at each end and at not less than two intermediate points. Ends of steel forms shall be interlocking and self-aligning. Steel forms shall include flexible forms for radius forming, corner forms, form spreaders, and fillers. Steel forms shall have a nominal length of 3 m (10 feet) with a minimum of two welded stake pockets per form. Stake pins shall be solid steel rods with chamfered heads and pointed tips designed for use with steel forms.

2.6.1 Sidewalk Forms

Sidewalk forms shall be of a height equal to the full depth of the finished sidewalk.

2.6.2 Curb and Gutter Forms

Curb and gutter outside forms shall have a height equal to the full depth of the curb or gutter. The inside form of curb shall have batter as indicated and shall be securely fastened to and supported by the outside form. Rigid forms shall be provided for curb returns, except that benders or thin plank forms may be used for curb or curb returns with a radius of 3 m or more, where grade changes occur in the return, or where the central angle is such that a rigid form with a central angle of 90 degrees cannot be used. Back forms for curb returns may be made of 38 mm (1-1/2 inch) benders, for the full height of the curb, cleated together.

PART 3 EXECUTION

3.1 SUBGRADE PREPARATION

The subgrade shall be constructed to the specified grade and cross section prior to concrete placement. Subgrade shall be placed and compacted to conform with applicable requirements of Section 02225 EARTHWORK FOR ROADWAYS, RAILROADS, AND AIRFIELDS.

3.1.1 Sidewalk Subgrade

The subgrade shall be tested for grade and cross section with a template extending the full width of the sidewalk and supported between side forms.

3.1.2 Curb and Gutter Subgrade

The subgrade shall be tested for grade and cross sections by means of a template extending the full width of the curb and gutter. The subgrade shall be of materials equal in bearing quality to the subgrade under the adjacent pavement.

3.1.3 Maintenance of Subgrade

The subgrade shall be maintained in a smooth, compacted condition in conformity with the required section and established grade until the concrete is placed. The subgrade shall be in a moist condition when concrete is placed. The subgrade shall be prepared and protected so as to produce a subgrade free from frost when the concrete is deposited.

3.2 FORM SETTING

Forms shall be carefully set to the indicated alignment, grade and dimensions. Forms shall be held rigidly in place by a minimum of three stakes per form placed at intervals not to exceed 1.2 meters. Corners, deep sections, and radius bends shall have additional stakes and braces, as required. Clamps, spreaders, and braces shall be used where required to insure rigidity in the forms. Forms shall be removed without injuring the concrete. Bars or heavy tools shall not be used against the concrete in removing the forms. Any concrete found defective after form removal shall be promptly and satisfactorily repaired. Forms shall be cleaned and coated with form oil each time before concrete is placed. Wood forms may,

instead, be thoroughly wetted with water before concrete is placed, except that with probable freezing temperatures, oiling is mandatory.

3.2.1 Sidewalks

Forms for sidewalks shall be set with the upper edge true to line and grade with an allowable tolerance of 3 mm in any 3 m long section. After forms are set, grade and alignment shall be checked with a 3.05 m (10-foot) straightedge. Forms shall have a transverse slope as indicated with the low side adjacent to the roadway. Side forms shall not be removed for 12 hours after finishing has been completed.

3.2.2 Curbs and Gutters

The forms of the front of the curb shall be removed not less than 2 hours nor more than 6 hours after the concrete has been placed. Forms back of curb shall remain in place until the face and top of the curb have been finished as specified for concrete finishing. Gutter forms shall not be removed while the concrete is sufficiently plastic to slump in any direction.

3.3 SIDEWALK CONCRETE PLACEMENT AND FINISHING

3.3.1 Formed Sidewalks

Concrete shall be placed in the forms in one layer of such thickness that when consolidated and finished the sidewalks will be of the thickness indicated. After concrete has been placed in the forms, a strike-off guided by side forms shall be used to bring the surface to proper section to be compacted. The concrete shall be consolidated with an approved vibrator, and the surface shall be finished to grade with a wood float, bull float, or darby, edged and broom finished.

3.3.2 Concrete Finishing

After straightedging, when most of the water sheen has disappeared, and just before the concrete hardens, the surface shall be finished to a smooth and uniformly fine granular or sandy texture free of waves, irregularities, or tool marks. A scored surface shall be produced by brooming with a fiber-bristle brush in a direction transverse to that of the traffic.

3.3.3 Edge and Joint Finishing

All slab edges, including those at formed joints, shall be finished carefully with an edger having a radius of 3 mm. Transverse joint shall be edged before brooming, and the brooming shall eliminate the flat surface left by the surface face of the edger. Corners and edges which have crumbled and areas which lack sufficient mortar for proper finishing shall be cleaned and filled solidly with a properly proportioned mortar mixture and then finished.

3.3.4 Surface and Thickness Tolerances

Finished surfaces shall not vary more than 7.9 mm (5/16 inch) from the testing edge of a 3.05 m (10-foot) straightedge. Permissible deficiency in section thickness will be up to 6.4 mm (1/4 inch).

3.4 CURB AND GUTTER CONCRETE PLACEMENT AND FINISHING

3.4.1 Formed Curb and Gutter

Concrete shall be placed to the section required in a single lift. Consolidation shall be achieved by using approved mechanical vibrators.

3.4.2 Concrete Finishing

Exposed surfaces shall be floated and finished with a smooth wood float until true to grade and section and uniform in texture. Floated surfaces shall then be brushed with a fine-hair brush with longitudinal strokes. The edges of the gutter and top of the curb shall be rounded with an edging tool to a radius of 18.75 mm. Immediately after removing the front curb form, the face of the curb shall be rubbed with a wood or concrete rubbing block and water until blemishes, form marks, and tool marks have been removed. The front curb surface, while still wet, shall be brushed in the same manner as the gutter and curb top. The top surface of gutter and entrance shall be finished to grade with a wood float.

3.4.3 Joint Finishing

Curb edges at formed joints shall be finished as indicated.

3.4.4 Surface and Thickness Tolerances

Finished surfaces shall not vary more than 6.4 mm (1/4 inch) from the testing edge of a 3.05 m (10-foot) straightedge. Permissible deficiency in section thickness will be up to 6.4 mm (1/4 inch).

3.5 SIDEWALK JOINTS

Sidewalk joints shall be constructed to divide the surface into rectangular areas. Transverse contraction joints shall be spaced at a distance equal to the sidewalk width or 1.5 m on centers, whichever is less, and shall be continuous across the slab. Longitudinal contraction joints shall be constructed along the centerline of all sidewalks 3 m or more in width. Transverse expansion joints shall be installed at sidewalk returns and opposite expansion joints in adjoining curbs. Where the sidewalk is not in contact with the curb, transverse expansion joints shall be installed as indicated. Expansion joints shall be formed about structures and features which project through or into the sidewalk pavement, using joint filler of the type, thickness, and width indicated.

3.5.1 Contraction Joints

The contraction joints shall be formed in the fresh concrete by cutting a groove in the top portion of the slab to a depth of at least one-fourth of the sidewalk slab thickness, using a jointer to cut the groove, or by sawing a groove in the hardened concrete with a power-driven saw, unless otherwise approved. Sawed joints shall be constructed by sawing a groove in the concrete with a 3 mm (1/8-inch) blade to the depth indicated. An ample supply of saw blades shall be available on the job before concrete placement is started, and at least one standby sawing unit in good working order shall be available at the jobsite at all times during the sawing operations.

3.5.2 Expansion Joints

Expansion joints shall be formed with 12.7 (1/2) mm (inch) joint filler strips. Joint filler shall be placed with top edge 6 mm below the surface

and shall be held in place with steel pins or other devices to prevent warping of the filler during floating and finishing. Immediately after finishing operations are completed, joint edges shall be rounded with an edging tool having a radius of 3 mm, and concrete over the joint filler shall be removed. At the end of the curing period, expansion joints shall be carefully cleaned and filled with joint sealer.

The joint opening shall be thoroughly cleaned before the sealing material is placed. Sealing shall be done so that the material will not be spilled on exposed surfaces of the concrete. Concrete at the joint shall be surface dry and atmospheric and concrete temperatures shall be above 10 degrees C at the time of application of joint sealing material. Excess material on exposed surfaces of the concrete shall be removed immediately and concrete surfaces cleaned.

3.5.3 Reinforcement Steel Placement

Reinforcement steel shall be accurately and securely fastened in place with suitable supports and ties before the concrete is placed.

3.6 CURB AND GUTTER JOINTS

Curb and gutter joints shall be constructed at right angles to the line of curb and gutter.

3.6.1 Contraction Joints

Contraction joints shall be constructed directly opposite contraction joints in abutting portland cement concrete pavements and spaced so that monolithic sections between curb returns will not be less than 1.5 m nor greater than 4.5 m in length. Contraction joints shall be constructed by means of 3 mm thick separators and of a section conforming to the cross section of the curb and gutter. Separators shall be removed as soon as practicable after concrete has set sufficiently to preserve the width and shape of the joint and prior to finishing.

3.6.2 Expansion Joints

Expansion joints shall be formed by means of preformed expansion joint filler material cut and shaped to the cross section of curb and gutter. Expansion joints shall be provided in curb and gutter directly opposite expansion joints of abutting portland cement concrete pavement, and shall be of the same type and thickness as joints in the pavement. Where curb and gutter do not abut portland cement concrete pavement, expansion joints at least 9.5 mm in width shall be provided at intervals not exceeding 15 meters. Expansion joints shall be provided in nonreinforced concrete gutter at locations indicated. Expansion joints shall be sealed immediately following curing of the concrete or as soon thereafter as weather conditions permit. Expansion joints and the top 25 mm depth of curb and gutter contraction-joints shall be sealed with joint sealer. The joint opening shall be thoroughly cleaned before the sealing material is placed. Sealing material shall not be spilled on exposed surfaces of the concrete. Concrete at the joint shall be surface dry and atmospheric and concrete temperatures shall be above 10 degrees C at the time of application of joint sealing material. Excess material on exposed surfaces of the concrete shall be removed immediately and concrete surfaces cleaned.

3.7 CURING AND PROTECTION

3.7.1 General Requirements

Concrete shall be protected against loss of moisture and rapid temperature changes for at least 7 days from the beginning of the curing operation. Unhardened concrete shall be protected from rain and flowing water. All equipment needed for adequate curing and protection of the concrete shall be on hand and ready for use before actual concrete placement begins. Protection shall be provided as necessary to prevent cracking of the pavement due to temperature changes during the curing period.

3.7.1.1 Mat Method

The entire exposed surface shall be covered with two or more layers of burlap. Mats shall overlap each other at least 150 mm. The mat shall be thoroughly wetted with water prior to placing on concrete surface and shall be kept continuously in a saturated condition and in intimate contact with concrete for not less than 7 days.

3.7.1.2 Impervious Sheeting Method

The entire exposed surface shall be wetted with a fine spray of water and then covered with impervious sheeting material. Sheets shall be laid directly on the concrete surface with the light-colored side up and overlapped 300 mm when a continuous sheet is not used. The curing medium shall not be less than 450 mm wider than the concrete surface to be cured, and shall be securely weighted down by heavy wood planks, or a bank of moist earth placed along edges and laps in the sheets. Sheets shall be satisfactorily repaired or replaced if torn or otherwise damaged during curing. The curing medium shall remain on the concrete surface to be cured for not less than 7 days.

3.7.1.3 Membrane Curing Method

A uniform coating of white-pigmented membrane-curing compound shall be applied to the entire exposed surface of the concrete as soon after finishing as the free water has disappeared from the finished surface. Formed surfaces shall be coated immediately after the forms are removed and in no case longer than 1 hour after the removal of forms. Concrete shall not be allowed to dry before the application of the membrane. If any drying has occurred, the surface of the concrete shall be moistened with a fine spray of water and the curing compound applied as soon as the free water disappears. Curing compound shall be applied in two coats by hand-operated pressure sprayers at a coverage of approximately 5 square meters per liter (200 square feet per gallon) for both coats. The second coat shall be applied in a direction approximately at right angles to the direction of application of the first coat. The compound shall form a uniform, continuous, coherent film that will not check, crack, or peel and shall be free from pinholes or other imperfections. If pinholes, abrasion, or other discontinuities exist, an additional coat shall be applied to the affected areas within 30 minutes. Concrete surfaces that are subjected to heavy rainfall within 3 hours after the curing compound has been applied shall be resprayed by the method and at the coverage specified above. Areas where the curing compound is damaged by subsequent construction operations within the curing period shall be resprayed. Necessary precautions shall be taken to insure that the concrete is properly cured at sawed joints, and that no curing compound enters the joints. The top of the joint opening and the joint groove at exposed edges shall be tightly

sealed before the concrete in the region of the joint is resprayed with curing compound. The method used for sealing the joint groove shall prevent loss of moisture from the joint during the entire specified curing period. Approved standby facilities for curing concrete pavement shall be provided at a location accessible to the jobsite for use in the event of mechanical failure of the spraying equipment or other conditions that might prevent correct application of the membrane-curing compound at the proper time. Concrete surfaces to which membrane-curing compounds have been applied shall be adequately protected during the entire curing period from pedestrian and vehicular traffic, except as required for joint-sawing operations and surface tests, and from any other possible damage to the continuity of the membrane.

3.7.2 Backfilling

After curing, debris shall be removed and the area adjoining the concrete shall be backfilled, graded, and compacted to conform to the surrounding area in accordance with lines and grades indicated.

3.7.3 Protection

Completed concrete shall be protected from damage until accepted. The Contractor shall repair damaged concrete and clean concrete discolored during construction. Concrete that is damaged shall be removed and reconstructed for the entire length between regularly scheduled joints. Refinishing the damaged portion will not be acceptable. Removed damaged portions shall be disposed of as directed.

3.7.4 Protective Coating

Protective coating of linseed oil mixture shall be applied to the exposed-to-view concrete surface.

3.7.4.1 Application

Curing and backfilling operation shall be completed prior to applying protective coating. Concrete shall be surface dry and thoroughly clean before each application. Coverage shall be not more than 11 square meters per liter (50 square yards per gallon) for first application and not more than 15.5 square meters per liter (70 square yards per gallon) for second application, except that the number of applications and coverage for each application for commercially prepared mixture shall be in accordance with the manufacturer's instructions. Coated surfaces shall be protected from vehicular and pedestrian traffic until dry.

3.7.4.2 Precautions

Protective coating shall not be heated by direct application of flame or electrical heaters and shall be protected from exposure to open flame, sparks, and fire adjacent to open containers or applicators. Material shall not be applied at temperatures lower than 10 degrees C.

3.8 FIELD QUALITY CONTROL

3.8.1 General Requirements

The Contractor shall perform the inspection and tests described and meet the specified requirements for inspection details and frequency of testing. Based upon the results of these inspections and tests, the Contractor

shall take the action and submit reports as required below, and any additional tests to insure that the requirements of these specifications are met.

3.8.2 Concrete Testing

3.8.2.1 Strength Testing

The Contractor shall provide molded concrete specimens for strength tests. Samples of concrete placed each day shall be taken not less than once a day nor less than once for every 190 cubic meters of concrete. The samples for strength tests shall be taken in accordance with ASTM C 172. Cylinders for acceptance shall be molded in conformance with ASTM C 31 by an approved testing laboratory. Each strength test result shall be the average of two test cylinders from the same concrete sample tested at 28 days, unless otherwise specified or approved. Concrete specified on the basis of compressive strength will be considered satisfactory if the averages of all sets of three consecutive strength test results equal or exceed the specified strength, and no individual strength test result falls below the specified strength by more than 4 MPa.

3.8.2.2 Air Content

Air content shall be determined in accordance with ASTM C 173 or ASTM C 231. ASTM C 231 shall be used with concretes and mortars made with relatively dense natural aggregates. Two tests for air content shall be made on randomly selected batches of each class of concrete placed during each shift. Additional tests shall be made when excessive variation in concrete workability is reported by the placing foreman or the Government inspector. If results are out of tolerance, the placing foreman shall be notified and he shall take appropriate action to have the air content corrected at the plant. Additional tests for air content will be performed on each truckload of material until such time as the air content is within the tolerance specified.

3.8.2.3 Slump Test

Two slump tests shall be made on randomly selected batches of each class of concrete for every 190 cubic meters, or fraction thereof, of concrete placed during each shift. Additional tests will be performed when excessive variation in the workability of the concrete is noted or when excessive crumbling or slumping is noticed along the edges of slip-formed concrete.

3.8.3 Thickness Evaluation

The anticipated thickness of the concrete shall be determined prior to placement by passing a template through the formed section or by measuring the depth of opening of the extrusion template of the curb forming machine. If a slip form paver is used for sidewalk placement, the subgrade shall be true to grade prior to concrete placement and the thickness will be determined by measuring each edge of the completed slab.

3.8.4 Surface Evaluation

The finished surface of each category of the completed work shall be uniform in color and free of blemishes and form or tool marks.

3.9 SURFACE DEFICIENCIES AND CORRECTIONS

3.9.1 Thickness Deficiency

When measurements indicate that the completed concrete section is deficient in thickness by more than 6 mm the deficient section will be removed, between regularly scheduled joints, and replaced.

3.9.2 High Areas

In areas not meeting surface smoothness and plan grade requirements, high areas shall be reduced either by rubbing the freshly finished concrete with carborundum brick and water when the concrete is less than 36 hours old or by grinding the hardened concrete with an approved surface grinding machine after the concrete is 36 hours old or more. The area corrected by grinding the surface of the hardened concrete shall not exceed 5 percent of the area of any integral slab, and the depth of grinding shall not exceed 6 mm. All pavement areas requiring grade or surface smoothness corrections in excess of the limits specified above shall be removed and replaced.

3.9.3 Appearance

Exposed surfaces of the finished work will be inspected by the Government and any deficiencies in appearance will be identified. Areas which exhibit excessive cracking, discoloration, form marks, or tool marks or which are otherwise inconsistent with the overall appearances of the work shall be removed and replaced.

-- End of Section --

SECTION 02551

BITUMINOUS PAVING FOR ROADS, STREETS AND OPEN STORAGE AREAS

PART 1 GENERAL

1.1 REFERENCES

The publications listed below form a part of this specification to the extent referenced. The publications are referred to in the text by basic designation only.

AMERICAN SOCIETY FOR TESTING AND MATERIALS (ASTM)

ASTM C 29	(1991a) Unit Weight and Voids in Aggregate
ASTM C 88	(1990) Soundness of Aggregates by Use of Sodium Sulfate or Magnesium Sulfate
ASTM C 117	(1995) Materials Finer than 75 micrometer (No. 200) Sieve in Mineral Aggregates by Washing
ASTM C 127	(1988; R 1993) Specific Gravity and Absorption of Coarse Aggregate
ASTM C 128	(1993) Specific Gravity and Absorption of Fine Aggregate
ASTM C 131	(1996) Resistance to Degradation of Small-Size Coarse Aggregate by Abrasion and Impact in the Los Angeles Machine
ASTM C 136	(1996a) Sieve Analysis of Fine and Coarse Aggregates
ASTM C 183	(1995) Sampling and the Amount of Testing of Hydraulic Cement
ASTM D 5	(1994) Penetration of Bituminous Materials
ASTM D 75	(1987; R 1992) Sampling Aggregates
ASTM D 140	(1993) Sampling Bituminous Materials
ASTM D 242	(1995) Mineral Filler for Bituminous Paving Mixtures
ASTM D 1856	(1995a) Recovery of Asphalt from Solution by Abson Method
ASTM D 2041	(1995) Theoretical Maximum Specific Gravity and Density of Bituminous Paving Mixtures
ASTM D 2172	(1995) Quantitative Extraction of Bitumen from Bituminous Paving Mixtures

ASTM D 2216	(1992) Laboratory Determination of Water (Moisture) Content of Soil, and Rock
ASTM D 3381	(1992) Viscosity-Graded Asphalt Cement for Use in Pavement Construction
ASTM D 3515	(1989) Hot-Mixed, Hot-Laid Bituminous Paving Mixtures
ASTM D 4791	(1995) Flat or Elongated Particles in Coarse Aggregate

MILITARY STANDARDS (MIL-STD)

MIL-STD 620	(Rev. A, Notice 1) Test Method for Bituminous Paving Materials

1.2 NOT USED

1.3 SUBMITTALS

Government approval is required for submittals with a "GA" designation; submittals having an "FIO" designation are for information only. The following shall be submitted in accordance with Section 01330 SUBMITTAL PROCEDURES:

SD-09 Reports

Bituminous Pavement; GA.

Copies of test results.

SD-14 Samples

Bituminous Pavement; GA.

Samples of the materials in the quantities indicated below for the job mix formula.

Aggregate and mineral filler (if needed) to be blended in approximately the same proportions as used in the project	100 kg
Asphalt Cement	20 liters

Aggregate samples when new sources are developed, with a plan for operation, 60 days before starting production. Samples of the asphalt cement specified, not less than 7 days before production.

Waybills and Delivery Tickets; FIO.

Waybills and delivery tickets, during progress of the work.

1.4 PLANT, EQUIPMENT, MACHINES, AND TOOLS

1.4.1 General

The bituminous plant shall be of such capacity to produce the quantities of

bituminous mixtures required. Hauling equipment, paving machines, rollers, miscellaneous equipment, and tools shall be provided in sufficient numbers and capacity and in proper working condition to place the bituminous paving mixtures at a rate equal to the plant output.

1.4.2 Mixing Plants

The mixing plant shall be an automatic or semiautomatic controlled commercially manufactured unit designed and operated to consistently produce a mixture within the job-mix formula (JMF). The plant shall have a minimum capacity of 100 metric tons per hour. Drum mixers shall be prequalified at the production rate to be used during actual mix production. The prequalification tests will include extraction and recovery of the asphalt cement in accordance with ASTM D 2172 and ASTM D 1856. The penetration of the recovered asphalt binder shall not be less than 60 percent of the original penetration, as measured in accordance with ASTM D 5.

1.4.3 Straightedge

The Contractor shall furnish and maintain at the site, in good condition, one 3.66 m (12-foot) straightedge for each bituminous paver. Straightedge shall be made available for Government use. Straightedges shall be constructed of aluminum or other lightweight metal and shall have blades of box or box-girder cross section with flat bottom reinforced to insure rigidity and accuracy. Straightedges shall have handles to facilitate movement on pavement.

1.5 WEATHER LIMITATIONS

Unless otherwise directed, bituminous courses shall not be constructed when temperature of the surface of the existing pavement or base course is below 5 degrees C.

1.6 PROTECTION OF PAVEMENT

After final rolling, no vehicular traffic of any kind shall be permitted on the pavement until the pavement has cooled to 60 degrees C.

1.7 GRADE AND SURFACE-SMOOTHNESS REQUIREMENTS

Finished surface of bituminous courses, when tested as specified below and in paragraph ACCEPTABILITY OF WORK, shall conform to gradeline and elevations shown and to surface-smoothness requirements specified.

1.7.1 Plan Grade

The grade of the completed surface shall not deviate more than 15.2 mm (0.05 foot) from the plan grade.

1.7.2 Surface Smoothness

When a 3.66 m (12-foot) straightedge is laid on the surface parallel with the centerline of the paved area or transverse from crown to pavement edge, the surface shall vary not more than 6.4 mm (1/4 inch) from the straightedge.

1.8 GRADE CONTROL

Lines and grades shall be established and maintained by means of line and grade stakes placed at site of work in accordance with the Special Contract Requirements. Elevations of bench marks used by the Contractor for controlling pavement operations at the site of work will be determined, established, and maintained by the Government. Finished pavement elevations shall be established and controlled at the site of work by the Contractor in accordance with bench mark elevations furnished by the Contracting Officer.

1.9 SAMPLING AND TESTING

1.9.1 Aggregates

1.9.1.1 General

Samples of aggregates shall be furnished by the Contractor for approval of aggregate sources and stockpiles prior to the start of production and at times during production of the bituminous mixtures. Times and points of sampling will be designated by the Contracting Officer. Samples will be the basis of approval of specific sources or stockpiles of aggregates for aggregate requirements. Unless otherwise directed, ASTM D 75 shall be used in sampling coarse and fine aggregate, and ASTM C 183 shall be used in sampling mineral filler. All tests necessary to determine compliance with requirements specified herein will be made by the Government.

1.9.1.2 Sources

Sources of aggregates shall be selected well in advance of the time the materials are required in the work. If a previously developed source is selected, evidence shall be submitted 60 days before starting production, indicating that the central-plant hot-mix bituminous pavements constructed with the aggregates have had a satisfactory service record of at least five years under similar climatic and traffic conditions. The Contracting Officer will make such tests and other investigations as necessary to determine whether aggregates meeting requirements specified herein can be produced from proposed sources. If a sample of material from a new source fails to meet specification requirements, the material represented by the sample shall be replaced, and the cost of testing the replaced sample will be at the expense of the Contractor. Approval of the source of aggregate does not relieve the Contractor of responsibility for delivery at the jobsite of aggregates that meet the requirements specified herein.

1.9.2 Bituminous Materials

Samples of bituminous materials shall be obtained by the Contractor; sampling shall be in accordance with ASTM D 140. Tests necessary to determine conformance with requirements specified herein will be performed by the Government without cost to the Contractor. Sources where bituminous materials are obtained shall be selected in advance of the time when materials will be required in the work. In addition to initial qualification testing of bituminous materials, samples shall be taken before and during construction when shipments of bituminous materials are received or when necessary to assure some condition of handling or storage has not been detrimental to the bituminous material. The samples will be taken by the Contractor and tested by the Contracting Officer.

1.9.3 Bituminous Mixtures

Sampling and testing of bituminous mixtures will be accomplished by the

Contracting Officer.

1.10 DELIVERY, STORAGE, AND HANDLING OF MATERIALS

1.10.1 Mineral Aggregates

Mineral aggregates shall be delivered to the site of the bituminous mixing plant and stockpiled in such manner as to preclude fracturing of aggregate particles, segregation, contamination, or intermingling of different materials in the stockpiles or cold-feed hoppers. Mineral filler shall be delivered, stored, and introduced into the mixing plant in a manner to preclude exposure to moisture or other detrimental conditions.

1.10.2 Bituminous Materials

Bituminous materials shall be maintained at appropriate temperature during storage but shall not be heated by application of direct flame to walls of storage tanks or transfer lines. Storage tanks, transfer lines, and weigh buckets shall be thoroughly cleaned before a different type or grade of bitumen is introduced into the system. The asphalt cement shall be heated sufficiently to allow satisfactory pumping of the material; however, the storage temperature shall be maintained below 150 degrees C.

1.11 ACCESS TO PLANT AND EQUIPMENT

The Contracting Officer shall have access at all times to all parts of the paving plant for checking adequacy of the equipment in use; inspecting operation of the plant; verifying weights, proportions, and character of materials; and checking temperatures maintained in preparation of the mixtures.

1.12 WAYBILLS AND DELIVERY TICKETS

Before the final statement is allowed, the Contractor shall file with the Contracting Officer certified waybills and certified delivery tickets for all aggregates and bituminous materials actually used in construction.

PART 2 PRODUCTS

2.1 BITUMINOUS HOT MIX

Shall consist of coarse aggregate, fine aggregate, mineral filler, bituminous material, and approved additives, if required, of the qualities and in the proportions specified and shall conform to the requirements contained in paragraphs PROPORTIONING OF MIXTURE and ACCEPTABILITY OF WORK.

2.1.1 Aggregates

Aggregates shall consist of crushed stone, crushed gravel, crushed slag, screening, sand, and mineral filler, as required. The portion of materials retained on the 4.75 mm sieve shall be known as coarse aggregate, the portion passing the 4.75 mm sieve and retained on the 0.075 millimeter sieve as fine aggregate, and the portion passing the 0.075 millimeter sieve as mineral filler. Aggregate gradation shall conform to gradation(s) specified in TABLE I. TABLE I is based on aggregates of uniform specific gravity; the percentage passing various sieves may be changed by the Contracting Officer when aggregates of varying specific gravities are used. Adjustments of percentage passing various sieves may be changed by the Contracting Officer when aggregates vary by more than 0.2 in specific

gravity.

TABLE I. AGGREGATE GRADATION

Sieve Size	Wearing Course, Percent Passing	Intermediate Course, Percent Passing
12.5 mm	100	100
9.50 mm	86±7	82±9
4.75 mm	66±7	72±9
2.36 mm	53±7	54±9
2.00 mm	41±7	41±9
0.600 mm	31±7	32±9
0.300 mm	21±6	24±9
0.150 mm	13±5	12±7
0.075 mm	4.5±1.5	5±2

2.1.1.1 Coarse Aggregate

Coarse aggregate shall consist of clean, sound, durable particles meeting the following requirements.

a. Percentage of loss shall not exceed 40 after 500 revolutions, as determined in accordance with ASTM C 131.

b. Percentage of loss shall not exceed 9 after five cycles performed in accordance with ASTM C 88, using magnesium sulfate.

c. The dry weight of crushed slag shall not be less than 1200 kg/cubic m, as determined in accordance with ASTM C 29.

d. Crushed gravel retained on the 4.75 mm sieve and each coarser sieve shall contain at least 75 percent by weight of crushed pieces having one or more fractured faces with the area of each face equal to at least 75 percent of the smallest midsectional area of piece. When two fractures are contiguous, the angle between planes of fractures shall be at least 30 degrees to count as two fractured faces.

e. Particle shape of crushed aggregates shall be essentially cubical. The quantity of flat and elongated particles in any sieve size shall not exceed 20 percent by weight, when determined in accordance with ASTM D 4791.

2.1.1.2 Fine Aggregate

Fine aggregate shall consist of clean, sound, durable particles including natural sand or crushed stone, slag, or gravel that meets requirements for wear and soundness specified for coarse aggregate. Fine aggregate produced by crushing gravel shall have at least 90 percent by weight of crushed particles having two or more fractured faces in the portion retained on the 0.600 millimeter sieve. This requirement shall apply to the material before blending with natural sand when blending is necessary. Quantity of natural sand to be added to the wearing- and intermediate-course mixtures shall not exceed 25 percent by weight of coarse and fine aggregate and material passing the 0.075 millimeter sieve. Natural sand shall be clean and free from clay and organic matter. Percentage of loss shall not exceed 9 after five cycles of the soundness test performed in accordance with ASTM

C 88, using magnesium sulfate.

2.1.1.3 Mineral Filler

Mineral filler shall conform to ASTM D 242.

2.1.2 Bituminous Material

Asphalt cement shall conform to ASTM D 3381, Grade 20.

2.1.3 Additives

The use of additives such as antistripping and antifoaming agents is subject to approval.

2.2 PROPORTIONING OF MIXTURE

2.2.1 Job Mix Formula

The JMF for the bituminous mixture will be furnished the Contractor by the Contracting Officer. The Contractor shall furnish samples of materials for mix design. Blending of the aggregates will be accomplished by the Government. No payment will be made for mixtures produced prior to the approval of the JMF. The formula will indicate the percentage of each stockpile and mineral filler, the percentage of each size aggregate, the percentage of bitumen, and the temperature of the completed mixture when discharged from the mixer. Tolerances are given in TABLE II for asphalt content, temperature, and aggregate grading for tests conducted on the mix as discharged from the mixing plant; however, the final evaluation of aggregate gradation and asphalt content will be based on paragraph ACCEPTABILITY OF WORK. Bituminous mix that deviates more than 14 degrees C from the JMF shall be rejected. The JMF may be adjusted during construction to improve paving mixtures, as directed, without adjustments in the contract unit prices.

TABLE II. JOB-MIX TOLERANCES

Material	Tolerance, Plus or Minus
Aggregate passing 4.75 mm sieve or larger	5 percent
Aggregate passing 2.36, 1.18, 0.6, and 0.3 mm sieves	4 percent
Aggregate passing 150 and 75 micrometer sieves	2 percent
Bitumen	0.25 percent
Temperature of mixing	14 degrees C

2.2.2 Test Properties of Bituminous Mixtures

Finished mixture shall meet requirements described below when tested in accordance with MIL-STD 620, Method 100. All samples will be compacted with 50 blows of specified hammer on each side of sample. When bituminous mixture fails to meet the requirements specified below, the paving operation shall be stopped until the cause of noncompliance is determined and corrected.

2.2.2.1 Stability, Flow, and Voids

Requirements for stability, flow, and voids are shown in TABLES III and IV

for nonabsorptive and absorptive aggregates, respectively.

TABLE III. NONABSORPTIVE-AGGREGATE MIXTURE

	Wearing Course	Intermediate Course
Stability minimum, newtons	2200	2200
Flow maximum, 25/100-millimeter units	20	20
Voids total mix, percent (1)	3-5	4-6
Voids filled with bitumen, percent (2)	75-85	65-75

(1) The Contracting Officer may permit deviations from limits specified when gyratory method of design is used to develop the JMF.

(2) The Contracting Officer may permit deviation from limits specified for voids filled with bitumen in the intermediate course in order to stay within limits for percent voids total mix.

TABLE IV. ABSORPTIVE-AGGREGATE MIXTURE

	Wearing Course	Intermediate Course
Stability minimum, newtons	2200	2200
Flow maximum, 25/100-millimeter units	20	20
Voids total mix, percent (1)	2-4	3-5
Voids filled with bitumen, percent (2)	80-90	70-80

(1) The Contracting Officer may permit deviations from limits specified when gyratory method of design is used to develop the JMF.

(2) The Contracting Officer may permit deviation from limits specified for voids filled with bitumen in the intermediate course in order to stay within limits for percent voids total mix.

a. When the water-absorption value of the entire blend of aggregate does not exceed 2.5 percent as determined in accordance with ASTM C 127and ASTM C 128, the aggregate is designated as nonabsorptive. The theoretical specific gravity computed from the apparent specific gravity or ASTM D 2041 will be used in computing voids total mix and voids filled with bitumen, and the mixture shall meet requirements in TABLE III.

b. When the water-absorption value of the entire blend of aggregate exceeds 2.5 percent as determined in accordance with ASTM C 127 and ASTM C 128, the aggregate is designated as absorptive. The theoretical specific gravity computed from the bulk-impregnated specific gravity method contained in ASTM D 2041 shall be used in computing percentages of voids total mix and voids filled with bitumen; the mixture shall meet requirements in TABLE IV.

2.2.2.2 Stability

The index of retained stability must be greater than 75 percent as determined by MIL-STD 620, Method 104. When the index of retained stability is less than 75, the aggregate stripping tendencies may be countered by the use of hydrated lime or by treating the bitumen with an approved antistripping agent. The hydrated lime is considered as mineral

filler and should be considered in the gradation requirements. The amount of hydrated lime or antistripping agent added to bitumen shall be sufficient, as approved, to produce an index of retained stability of not less than 75 percent. No additional payment will be made to the Contractor for addition of antistripping agent required.

PART 3 EXECUTION

3.1 BASE COURSE CONDITIONING

The surface of the base course will be inspected for adequate compaction and surface tolerances specified in Section 02233 GRADED-CRUSHED AGGREGATE BASE COURSE. Unsatisfactory areas shall be corrected.

3.2 EXISTING PAVEMENT CONDITIONING

Existing pavements damaged during construction shall be repaired or removed and replaced to match existing conditions at no cost to the Government.

3.3 PREPARATION OF BITUMINOUS MIXTURES

Rates of feed of aggregates shall be regulated so that the moisture content and temperature of aggregates will be within specified tolerances. Aggregates, mineral filler, and bitumen shall be conveyed into the mixer in proportionate quantities required to meet the JMF. Mixing time shall be as required to obtain a uniform coating of the aggregate with the bituminous material. Temperature of bitumen at time of mixing shall not exceed 150 degrees C. Temperature of aggregate and mineral filler in the mixer shall not exceed 160 degrees C when bitumen is added. Overheated and carbonized mixtures or mixtures that foam shall not be used.

3.4 WATER CONTENT OF AGGREGATES

Drying operations shall reduce the water content of mixture to less than 0.75 percent. The water content test will be conducted in accordance with ASTM D 2216; the weight of the sample shall be at least 500 grams. If the water content is determined on hot bin samples, the water content will be a weighted average based on composition of blend.

3.5 STORAGE OF BITUMINOUS PAVING MIXTURE

Storage shall conform to the applicable requirements of ASTM D 3515; however, in no case shall the mixture be stored for more than 4 hours.

3.6 TRANSPORTATION OF BITUMINOUS MIXTURE

Transportation from paving plant to site shall be in trucks having tight, clean, smooth beds lightly coated with an approved releasing agent to prevent adhesion of the mixture to the truck bodies. Excessive releasing agent shall be drained prior to loading. Each load shall be covered with canvas or other approved material of ample size to protect mixture from weather and to prevent loss of heat. Loads that have crusts of cold, unworkable material or that have become wet will be rejected. Hauling over freshly placed material will not be permitted.

3.7 SURFACE PREPARATION OF UNDERLYING COURSE

Prior to placing of the intermediate or wearing course, the underlying course shall be cleaned of all foreign or objectionable matter with power

brooms and hand brooms.

3.8 PRIME COATING

Surfaces of previously constructed base course shall be sprayed with a coat of bituminous material conforming to Section 02558 BITUMINOUS TACK AND PRIME COATS.

3.9 TACK COATING

Contact surfaces of previously constructed pavement, curbs, manholes, and other structures shall be sprayed with a thin coat of bituminous material conforming to Section 02558 BITUMINOUS TACK AND PRIME COATS.

3.10 PLACING

Bituminous courses shall be constructed only when the base course or existing pavement has no free water on the surface. Bituminous mixtures shall not be placed without ample time to complete spreading and rolling during daylight hours, unless approved satisfactory artificial lighting is provided.

3.10.1 Offsetting Joints

The wearing course shall be placed so that longitudinal joints of the wearing course will be offset from joints in the intermediate course by at least 300 mm. Transverse joints in the wearing course shall be offset by at least 600 mm from transverse joints in the intermediate course.

3.10.2 General Requirements for Use of Mechanical Spreader

Range of temperatures of mixtures, when dumped into the mechanical spreader, shall be as determined by the Contracting Officer. Mixtures having temperatures less than 110 degrees C when dumped into the mechanical spreader shall not be used. The mechanical spreader shall be adjusted and the speed regulated so that the surface of the course being laid will be smooth and continuous without tears and pulls, and of such depth that, when compacted, the surface will conform to the cross section indicated. Placing with respect to center line areas with crowned sections or high side of areas with one-way slope shall be as directed. Each lot of material placed shall conform to requirements specified in paragraph ACCEPTABILITY OF WORK. Placing of the mixture shall be as nearly continuous as possible, and speed of placing shall be adjusted, as directed, to permit proper rolling. When segregation occurs in the mixture during placing, the spreading operation shall be suspended until the cause is determined and corrected.

3.10.3 Placing Strips Succeeding Initial Strips

In placing each succeeding strip after initial strip has been spread and compacted as specified below, the screed of the mechanical spreader shall overlap the previously placed strip 50 to 75 mm and be sufficiently high so that compaction produces a smooth dense joint. Mixture placed on the edge of a previously placed strip by the mechanical spreader shall be pushed back to the edge of the strip by use of a lute. Excess mixture shall be removed and wasted.

3.10.4 Handspreading in Lieu of Machine Spreading

In areas where the use of machine spreading is impractical, the mixture shall be spread by hand. Spreading shall be in a manner to prevent segregation. The mixture shall be spread uniformly with hot rakes in a loose layer of thickness that, when compacted, will conform to required grade, density, and thickness.

3.11 COMPACTION OF MIXTURE

Rolling shall begin as soon after placing as the mixture will bear a roller without undue displacement. Delays in rolling freshly spread mixture will not be permitted. After initial rolling, preliminary tests of crown, grade, and smoothness shall be made by the Contractor. Deficiencies shall be corrected so that the finished course will conform to requirements for grade and smoothness specified herein. Crown, grade, and smoothness will be checked in each lot of completed pavement by the Contracting Officer for compliance and will be evaluated as specified in paragraph ACCEPTABILITY OF WORK. After the Contractor is assured of meeting crown, grade, and smoothness requirements, rolling shall be continued until a mat density of 97.0 to 100.0 percent and a joint density of 95.0 to 100.0 percent of density of laboratory-compacted specimens of the same mixture is obtained. The density will be determined and evaluated as specified in paragraph ACCEPTABILITY OF WORK. Places inaccessible to rollers shall be thoroughly compacted with hot hand tampers.

3.11.1 Testing of Mixture

At the start of the plant operation, a quantity of mixture shall be prepared that is sufficient to construct a test section at least 15 m long, two spreader widths wide and of thickness to be used in the project. Mixture shall be placed, spread, and rolled with equipment to be used in the project and in accordance with the requirements specified above. This test section shall be tested and evaluated as a lot and shall conform to all specified requirements. If test results are satisfactory, the test section shall remain in place as part of the completed pavement. If tests indicate that the pavement does not conform to specification requirements, necessary adjustments to plant operations and rolling procedures shall be made immediately, and test section will be evaluated as specified in paragraph ACCEPTABILITY OF WORK. Additional test sections, as directed, shall be constructed and sampled for conformance to specification requirements. In no case shall the Contractor start full production of an intermediate or wearing course mixture without approval.

3.11.2 Correcting Deficient Areas

Mixtures that become contaminated or are defective shall be removed to the full thickness of the course. Edges of the area to be removed shall be cut so that sides are perpendicular and parallel to the direction of traffic and so that the edges are vertical. Edges shall be sprayed with bituminous materials conforming to Section 02558 BITUMINOUS TACK AND PRIME COATS. Fresh paving mixture shall be placed in the excavated areas in sufficient quantity so that the finished surface will conform to grade and smoothness requirements. Paving mixture shall be compacted to the density specified herein. Skin patching of an area that has been rolled shall not be permitted.

3.12 JOINTS

3.12.1 General

Joints between old and new pavements, between successive work days, or joints that have become cold (less than 80 degrees C) shall be made to insure continuous bond between the old and new sections of the course. All joints shall have the same texture and smoothness as other sections of the course. Contact surfaces of previously constructed pavements coated by dust, sand, or other objectionable material shall be cleaned by brushing or shall be cut back as directed. When directed by the Contracting Officer, the surface against which new material is placed shall be sprayed with a thin, uniform coat of bituminous material conforming to Section 02558 BITUMINOUS TACK AND PRIME COATS. Material shall be applied far enough in advance of placement of a fresh mixture to insure adequate curing. Care shall be taken to prevent damage or contamination of the sprayed surface.

3.12.2 Transverse Joints

The roller shall pass over the unprotected end of a strip of freshly placed material only when placing is discontinued or delivery of the mixture is interrupted to the extent that the material in place may become cold. In all cases, prior to continuing placement, the edge of previously placed pavement shall be cut back to expose an even vertical surface for full thickness of the course. In continuing placement of a strip, the mechanical spreader shall be positioned on the transverse joint so that sufficient hot mixture will be spread to obtain a joint after rolling that conforms to the required density and smoothness specified herein.

3.12.3 Longitudinal Joints

Edges of a previously placed strip shall be prepared such that the pavement in and immediately adjacent to the joint between this strip and the succeeding strip meets the requirements for grade, smoothness, and density specified in paragraph ACCEPTABILITY OF WORK.

3.13 ACCEPTABILITY OF WORK

3.13.1 General

A lot shall be that quantity of construction that will be evaluated for compliance with specification requirements. A lot shall be equal to 100 metric tons. The Government will conduct all initial acceptance tests. Additional tests required to determine acceptability of nonconforming material will be preformed by the Government at the expense of the Contractor.

3.13.1.1 Lot Evaluation

In order to evaluate aggregate gradation, asphalt content, and density, each lot shall be divided into four equal sublots. For density determination, one random sample shall be taken from the mat, and one random sample shall be taken from the joint of each sublot. A coring machine will be used for taking mat and joint samples from the completed pavement. Core samples will be taken with the coring machine centered over the joint. After air drying to a constant weight, random samples obtained from the mat shall be used for density determination in accordance with MIL-STD 620, Method 101. Samples for determining asphalt content and aggregate gradation shall be taken from loaded trucks within each sublot. Asphalt content shall be determined in accordance with ASTM D 2172, Method A or B. Aggregate gradation shall be determined for the mix by testing the recovered aggregate in accordance with ASTM C 136 and ASTM C 117.

3.13.1.2 Lot Failure

When a lot of material fails to meet the specification requirements, that lot shall be removed and replaced or accepted at a reduced price. The lowest percent payment for any pavement characteristic (i.e., gradation, asphalt content, density, grade, and smoothness) defined below shall be the percent payment for that lot. The percent payment is based on the pavement characteristics and the contract unit price.

3.13.1.3 Optional Sampling and Testing

The Contracting Officer reserves the right to sample and test any area which appears to deviate from the specification requirements. Testing in these areas will be in addition to the lot testing, and the requirements for these areas will be the same as those for a lot.

3.13.2 Aggregate Gradation

The mean absolute deviation of the four sublot aggregate gradations from the JMF for each sieve size will be evaluated and compared with TABLE V. The percent payment based on aggregate gradation shall be the lowest value determined for any sieve size in TABLE V. All tests for aggregate gradation will be completed and reported within 24 hours after completion of construction of each lot. The computation of mean absolute deviation for one sieve size is illustrated below:

Example: Assume the following JMF and sublot test results for aggregate gradation

	Percent by Weight Passing Sieves				
Sieve Size	JMF	Test No. 1	Test No. 2	Test No. 3	Test No. 4
19 mm	100	100	100	100	100
12.5 mm	88	87	88	90	88
9.5 mm	75	72	77	78	74
4.75 mm	64	60	65	67	62
2.36 mm	53	50	56	57	52
1.18 mm	42	39	44	45	41
0.600 mm	32	30	34	35	32
0.300 mm	20	17	20	22	21
0.150 mm	10	8	10	10	11
0.075 mm	6	4	7	8	6

Mean Absolute Deviation (for 75 micrometer sieve) = ((Absolute value of 4-6) + (Absolute value of 7-6) + (Absolute value of 8-6) + (Absolute value of 6-6))/4 = (2 + 1 + 2 + 0)/4 = 1.25

The mean absolute deviation for other sieve sizes can be determined in a similar way for this example to be:

Sieve Size	19 mm	12.5 mm	9.5 mm	4.75 mm	2.36 mm	1.18 mm	0.600 mm	0.300 mm	0.075 mm
Mean Absolute	0	0.75	2.25	2.50	2.75	2.25	1.75	1.50	0.75

Sieve Size	19 mm	12.5 mm	9.5 mm	4.75 mm	2.36 mm	1.18 mm	0.600 mm	0.300 mm	0.075 mm
Deviation									

The least percent payment based on any sieve size listed in TABLE V would be 98 percent for the 75 micrometer sieve. Therefore for this example the percent payment based on aggregate gradation is 98 percent.

TABLE V. PERCENT PAYMENT BASED ON MEAN ABSOLUTE DEVIATION OF AGGREGATE GRADATIONS FROM JMF

Sieve Size	Percent Payment Based On Mean Absolute Deviation from JMF						
	0.0-1.0	1.1-2.0	2.1-3.0	3.1-4.0	4.1-5.0	5.1-6.0	Above 6.0
19 mm	100	100	100	100	98	95	90
12.5 mm	100	100	100	100	98	95	90
9.5 mm	100	100	100	100	98	95	90
4.75 mm	100	100	100	100	98	95	90
2.36 mm	100	100	100	98	95	90	reject
1.18 mm	100	100	100	98	95	90	reject
0.600 mm	100	100	100	98	95	90	reject
0.300 mm	100	100	100	98	95	90	reject
0.150 mm	100	98	95	90	90	reject	reject
0.075 mm	100	98	90	reject	reject	reject	reject

3.13.3 Asphalt Content

The mean absolute deviation of the four asphalt contents from the JMF will be evaluated and compared with TABLE VI. The percent payment based on asphalt content shall be the value determined in TABLE VI. Asphalt content tests shall be completed and reported within 24 hours after construction of the lot.

TABLE VI. PERCENT PAYMENT BASED ON ASPHALT CONTENT

Mean Absolute Deviation of Extracted Asphalt Content from JMF	Percent Payment
less than 0.25	100
0.25-0.30	98
0.31-0.35	95
0.36-0.40	90
above 0.40	reject

3.13.4 Density

The average mat and joint densities will be expressed as a percentage of the laboratory density. The laboratory density for each lot will be determined in accordance with MIL-STD 620, Method 100 from four sets of laboratory samples. One sample will be obtained from each of the four sublots and will be divided into three specimens to produce one set of laboratory samples. Laboratory samples will be prepared from asphalt mixture which has not been reheated. Samples will be compacted at 121.1 degrees C (250 degrees F) within 2 hours of the time the mixture was prepared at the asphalt plant. Laboratory samples will be prepared in accordance with MIL-STD 620, Method 100.

3.13.4.1 Field Density

The field density will be determined and compared with TABLE VII. The percent payment based on density shall be the lowest value determined from TABLE VII. The percent payment based on mat density will be for all of the material placed in the lot. The percent payment based on joint density will be for the amount of material represented by an area equal to the lot joint length by 3 m wide not to exceed the lot size.

TABLE VII. PERCENT PAYMENT BASED ON DENSITY

Average Mat Density (4 Cores)	Percent Payment	Average Joint Density (4 Cores)
97.0-100.0	100.0	95.0-100.0
96.9	100.0	94.9
96.8-100.1	99.9	94.8
96.7	99.8	94.7
96.6-100.2	99.6	94.6
96.5	99.4	94.5
96.4-100.3	99.1	94.4
96.3	98.7	94.3
96.2-100.4	98.3	94.2
96.1	97.8	94.1
96.0-100.5	97.3	94.0
95.9	96.3	93.9
95.8-100.6	94.1	93.8
95.7	92.2	93.7
95.6-100.7	90.3	93.6
95.5	87.9	93.5
95.4-100.8	85.7	93.4
95.3	83.3	93.3
95.2-100.9	80.6	93.2
95.1	78.0	93.1
95.0-101.0	75.0	93.0
below 95.0, above 101.0	reject	below 93.0

3.13.4.2 Lot Density

All density results on a lot will be completed and reported within 24 hours after construction of that lot. When the Contracting Officer considers it necessary to take additional samples for density measurements, samples will be taken in groups of four (one for each sublot). The percent payment will be determined for each additional group of four samples and averaged with the percent payment for the original group to determine the final percent payment. The Contractor shall fill all sample holes with hot mix and compact.

3.13.5 Grade

Grade-conformance tests will be conducted by the Government. The finished surface of the pavement will be tested for conformance with plan-grade requirements. Within 5 working days after completion of placement of a particular lot, the Contracting Officer will inform the Contractor in writing of results of grade-conformance tests. The finished grade of each pavement area shall be determined by running lines of levels at intervals

of 8 m or less longitudinally and transversely to determine the elevation of the completed pavement. When more than 5 percent of all measurements made within a lot are outside the tolerances specified in paragraph GRADE AND SURFACE-SMOOTHNESS REQUIREMENTS, the payment for that lot will not exceed 95 percent of the bid price. In areas where the grade exceeds the plan-grade tolerances given in paragraph GRADE AND SURFACE-SMOOTHNESS REQUIREMENTS by more than 50 percent, the Contractor shall remove the deficient area and replace with fresh paving mixture at no additional cost to the Government. Sufficient material shall be removed to allow at least 25 mm of asphalt concrete to be placed. Skin patching for correcting low areas or planing for correcting high areas shall not be permitted.

3.13.6 Surface Smoothness

After completion of final rolling of a lot, the compacted surface will be tested by the Contracting Officer with a 3.66 m (12-foot) straightedge. Measurements will be made perpendicular to and across all mats at distances along the mat not to exceed 8 m. Location and deviation from straightedge of all measurements will be recorded. When more than 5 percent of all measurements along the mat within a lot exceed the specified tolerance, the unit price for that lot shall not exceed 95 percent of the bid price. Any joint or mat area surface deviation which exceeds the tolerance given in paragraph GRADE AND SURFACE-SMOOTHNESS REQUIREMENTS by more than 50 percent shall be corrected to meet the specification requirements. The Contractor shall remove the deficient area and replace with fresh paving mixture at no additional cost to the Government. Sufficient material shall be removed to allow at least 25 mm of asphalt concrete to be placed. Skin patching for correcting low areas or planing for correcting high areas shall not be permitted.

-- End of Section --

SECTION 02558

BITUMINOUS TACK AND PRIME COATS

PART 1 GENERAL

1.1 REFERENCES

The publications listed below form a part of this specification to the extent referenced. The publications are referred to in the text by basic designation only.

AMERICAN ASSOCIATION OF STATE HIGHWAY AND TRANSPORTATION OFFICIALS (AASHTO)

AASHTO T 40	(1978; R 1983) Sampling Bituminous Materials

AMERICAN SOCIETY OF TESTING AND MATERIALS (ASTM)

ASTM D 140	(1993) Sampling Bituminous Materials
ASTM D 977	(1991) Emulsified Asphalt
ASTM D 2995	(1993) Determining Application Rate of Bituminous Distributors

1.2 NOT USED

1.3 SUBMITTALS

Government approval is required for submittals with a "GA" designation; submittals having an "FIO" designation are for information only. The following shall be submitted in accordance with Section 01330 SUBMITTAL PROCEDURES:

SD-09 Reports

Tests; FIO.

Copies of all test results for bituminous materials, within 24 hours of completion of tests. Certified copies of the manufacturer's test reports indicating compliance with applicable specified requirements, not less than 30 days before the material is required in the work.

SD-18 Records

Waybills and Delivery Tickets; FIO.

Waybills and delivery tickets, during progress of the work.

1.4 PLANT, EQUIPMENT, MACHINES AND TOOLS

1.4.1 General Requirements

Plant, equipment, machines and tools used in the work shall be subject to approval and shall be maintained in a satisfactory working condition at all

times.

1.4.2 Bituminous Distributor

The distributor shall have pneumatic tires of such size and number to prevent rutting, shoving or otherwise damaging the base surface or other layers in the pavement structure. The distributor shall be designed and equipped to spray the bituminous material in a uniform coverage at the specified temperature, at readily determined and controlled rates with an allowable variation from the specified rate of not more than plus or minus 5 percent, and at variable widths. Distributor equipment shall include a separate power unit for the bitumen pump, full-circulation spray bars, tachometer, pressure gauges, volume-measuring devices, adequate heaters for heating of materials to the proper application temperature, a thermometer for reading the temperature of tank contents, and a hand hose attachment suitable for applying bituminous material manually to areas inaccessible to the distributor. The distributor shall be equipped to circulate and agitate the bituminous material during the heating process.

1.4.3 Power Brooms and Power Blowers

Power brooms and power blowers shall be suitable for cleaning the surfaces to which the bituminous coat is to be applied.

1.5 WEATHER LIMITATIONS

Bituminous coat shall be applied only when the surface to receive the bituminous coat is dry. Bituminous coat shall be applied only when the atmospheric temperature in the shade is 10 degrees C or above and when the temperature has not been below 2 degrees C for the 12 hours prior to application.

PART 2 PRODUCTS

2.1 TACK COAT

Emulsified asphalt shall conform to ASTM D 977 Grade RS-1 or SS-1.

2.2 PRIME COAT

Emulsified asphalt shall conform to ASTM D 977, Grade SS-1.

PART 3 EXECUTION

3.1 PREPARATION OF SURFACE

Immediately before applying the bituminous coat, all loose material, dirt, clay, or other objectionable material shall be removed from the surface to be treated. The surface shall be dry and clean at the time of treatment.

3.2 APPLICATION RATE

The exact quantities within the range specified, which may be varied to suit field conditions, will be determined by the Contracting Officer.

3.2.1 Tack Coat

Bituminous material for the tack coat shall be applied in quantities of not less than 0.20 liter nor more than 0.70 liter per square meter of

pavement surface.

3.2.2 Prime Coat

Bituminous material for the prime coat shall be applied in quantities of not less than 0.70 liter nor more than 1.80 liters per square meter of pavement surface.

3.3 APPLICATION TEMPERATURE

3.3.1 Viscosity Relationship

Asphalt application temperature shall provide an application viscosity between 10 and 60 seconds, Saybolt Furol, or between 20 and 120 square mm/sec, kinematic. The temperature viscosity relation shall be furnished to the Contracting Officer.

3.3.2 Temperature Ranges

The viscosity requirements shall determine the application temperature to be used. The following is a normal range of application temperatures:

Paving Grade Asphalts

Emulsions

RS-1	20-60 degrees C
SS-1	20-70 degrees C

*These temperature ranges exceed the flash point of the material and care should be taken in their heating.

3.4 APPLICATION

Following preparation and subsequent inspection of the surface, the bituminous coat shall be applied at the specified rate with uniform distribution over the surface to be treated. All areas and spots missed by the distributor shall be properly treated with the hand spray. Until the succeeding layer of pavement is placed, the surface shall be maintained by protecting the surface against damage and by repairing deficient areas at no additional cost to the Government. If required, clean dry sand shall be spread to effectively blot up any excess bituminous material. No smoking, fires, or flames other than those from the heaters that are a part of the equipment shall be permitted within 8 meters of heating, distributing, and transferring operations of bituminous material other than bituminous emulsions. To obtain uniform application of the prime coat on the surface treated at the junction of previous and subsequent applications, building paper shall be spread on the surface for a sufficient distance back from the ends of each application to start and stop the prime coat on the paper. Immediately after application, the building paper shall be removed and destroyed.

3.5 CURING PERIOD

Following application of the bituminous material and prior to application of the succeeding layer of pavement, the bituminous coat shall be allowed

to cure and to obtain evaporation of any volatiles or moisture. Prime coat shall be allowed to cure without being disturbed for a period of at least 48 hours or longer, as may be necessary to attain penetration into the treated course.

3.6 FIELD QUALITY CONTROL

Samples of the bituminous material shall be tested for compliance with the applicable specified requirements. A sample shall be obtained and tested by the Contractor for every 200 liters, or fraction thereof, of bituminous material used.

3.7 SAMPLING AND TESTING

Sampling and testing shall be performed by an approved commercial testing laboratory or by facilities furnished by the Contractor. No work requiring testing will be permitted until the facilities have been inspected and approved.

3.7.1 Sampling

The samples of bituminous material, unless otherwise specified, shall be in accordance with ASTM D 140 or AASHTO T 40. Sources from which bituminous materials are to be obtained shall be selected and notification thereof furnished the Contracting Officer within 15 days after the award of the contract.

3.7.2 Calibration Test

The Contractor shall furnish all equipment, materials, and labor necessary to calibrate the bituminous distributor. Calibration shall be made with the approved job material and prior to applying the bituminous coat material to the prepared surface. Calibration of the bituminous distributor shall be in accordance with ASTM D 2995.

3.7.3 Trial Applications

Before providing the complete bituminous coat, three lengths of at least 30 meters for the full width of the distributor bar shall be applied to evaluate the amount of bituminous material that can be satisfactorily applied.

3.7.3.1 Tack Coat Trial Application Rate

Unless otherwise authorized, the trial application rate of bituminous tack coat materials shall be applied in the amount of 0.20 liters per square meter. Other trial applications shall be made using various amounts of material as may be deemed necessary.

3.7.3.2 Prime Coat Trial Application Rate

Unless otherwise authorized, the trial application rate of bituminous materials shall be applied in the amount of 1.10 liters per square meter. Other trial applications shall be made using various amounts of material as may be deemed necessary.

3.7.4 Sampling and Testing During Construction

Quality control sampling and testing shall be performed as required in

paragraph FIELD QUALITY CONTROL.

-- End of Section --

SECTION 02580

PAVEMENT MARKINGS

PART 1 GENERAL

1.1 REFERENCES

The publications listed below form a part of this specification to the extent referenced. The publications are referred to in the text by basic designation only.

AMERICAN ASSOCIATION OF STATE HIGHWAY AND TRANSPORTATION OFFICIALS (AASHTO)

AASHTO M 248	(1991I) Ready-Mixed White and Yellow Traffic Paints

1.2 NOT USED

1.3 SUBMITTALS

Government approval is required for submittals with a "GA" designation; submittals having an "FIO" designation are for information only. The following shall be submitted in accordance with Section 01330 SUBMITTAL PROCEDURES:

SD-01 Data

Equipment Lists; GA.

Lists of proposed equipment to be used in performance of construction work, including descriptive data, and notifications of proposed Contractor actions as specified in this section.

SD-06 Instructions

Mixing, Thinning and Application; FIO.

Manufacturer's current printed product description and Material Safety Data Sheets (MSDS) for each type paint/color proposed for use.

SD-09 Reports

Material Tests; FIO.

Certified copies of the test reports, prior to the use of the materials at the jobsite. Testing shall be performed in an approved independent laboratory.

SD-13 Certificates

Volatile Organic Compound (VOC) Content; FIO.

Certificate stating that the proposed pavement marking paint meets the VOC regulations of the local Air Pollution Control District having jurisdiction

over the geographical area in which the project is located.

1.4 DELIVERY AND STORAGE

All materials shall be delivered and stored in sealed containers that plainly show the designated name, formula or specification number, batch number, color, date of manufacture, manufacturer's name, and directions, all of which shall be plainly legible at time of use.

1.5 EQUIPMENT

All machines, tools and equipment used in the performance of the work shall be approved and maintained in satisfactory operating condition. Equipment operating on roads and runways will display low speed traffic markings and traffic warning lights.

1.5.1 Paint Application Equipment

The equipment to apply paint to pavements shall be a self-propelled or mobile-drawn pneumatic spraying machine with suitable arrangements of atomizing nozzles and controls to obtain the specified results. The machine shall have a speed during application not less than 8 kilometers per hour (5 mph), and shall be capable of applying the stripe widths indicated, at the paint coverage rate specified in paragraph APPLICATION, and of even uniform thickness with clear-cut edges. Equipment used for marking streets and highways shall be capable of placing the prescribed number of lines at a single pass as solid lines, intermittent lines or a combination of solid and intermittent lines using a maximum of two different colors of paint as specified. The paint applicator shall have paint reservoirs or tanks of sufficient capacity and suitable gauges to apply paint in accordance with requirements specified. Tanks shall be equipped with suitable air-driven mechanical agitators. The spray mechanism shall be equipped with quick-action valves conveniently located, and shall include necessary pressure regulators and gauges in full view and reach of the operator. Paint strainers shall be installed in paint supply lines to insure freedom from residue and foreign matter that may cause malfunction of the spray guns. The paint applicator shall be readily adaptable for attachment of an air-actuated dispenser for the reflective media approved for use. Pneumatic spray guns shall be provided for hand application of paint in areas where the mobile paint applicator cannot be used.

1.5.2 NOT USED

1.5.3 NOT USED

1.5.4 NOT USED

1.5.5 Surface Preparation Equipment

1.5.5.1 Sandblasting Equipment

Sandblasting equipment shall include an air compressor, hoses, and nozzles of proper size and capacity as required for cleaning surfaces to be painted. The compressor shall be capable of furnishing not less than 70.8 liters per sec (150 cfm) of air at a pressure of not less than 620 kPa (90 psi) at each nozzle used, and shall be equipped with traps that will maintain the compressed air free of oil and water.

1.5.5.2 Waterblast Equipment

The water pressure shall be specified at 17.9 MPa (2600 psi) at 60 degrees C (140 degrees F in order to adequately clean the surfaces to be marked.

1.5.6 Traffic Controls

Suitable warning signs shall be placed near the beginning of the worksite and well ahead of the worksite for alerting approaching traffic from both directions. Small markers shall be placed along newly painted lines or freshly placed raised markers to control traffic and prevent damage to newly painted surfaces or displacement of raised pavement markers. Painting equipment shall be marked with large warning signs indicating slow-moving painting equipment in operation.

1.6 HAND-OPERATED, PUSH-TYPE MACHINES

All machines, tools, and equipment used in performance of the work shall be approved and maintained in satisfactory operating condition. Hand-operated push-type machines of a type commonly used for application of paint to pavement surfaces shall be acceptable for marking small streets and parking areas. Applicator machine shall be equipped with the necessary paint tanks and spraying nozzles, and shall be capable of applying paint uniformly at coverage specified. Sandblasting equipment shall be provided as required for cleaning surfaces to be painted. Hand-operated spray guns shall be provided for use in areas where push-type machines cannot be used.

PART 2 PRODUCTS

2.1 PAINT

The paint shall be homogeneous, easily stirred to smooth consistency, and shall show no hard settlement or other objectionable characteristics during a storage period of 6 months. Paint for roads and streets shall conform to AASHTO M 248, color as indicated. Pavement marking paints shall comply with applicable state and local laws enacted to ensure compliance with Federal Clean Air Standards. Paint materials shall conform to the restrictions of the local Air Pollution Control District.

2.2 NOT USED

2.3 NOT USED

2.4 NOT USED

2.5 NOT USED

2.6 SAMPLING AND TESTING

Materials proposed for use shall be stored on the project site in sealed and labeled containers, or segregated at source of supply, sufficiently in advance of needs to allow 60 days for testing. Upon notification by the Contractor that the material is at the site or source of supply, a sample shall be taken by random selection from sealed containers by the Contractor in the presence of a representative of the Contracting Officer. Samples shall be clearly identified by designated name, specification number, batch number, manufacturer's formulation number, project contract number, intended use, and quantity involved. Cost of sampling and testing the new material will be borne by the Contractor. Testing shall be performed in an

approved independent laboratory. If materials are approved based on reports furnished by the Contractor, samples will be retained by the Government for possible future testing should the material appear defective during or after application.

PART 3 EXECUTION

3.1 SURFACE PREPARATION

Surfaces to be marked shall be thoroughly cleaned before application of the pavement marking material. Dust, dirt, and other granular surface deposits shall be removed by sweeping, blowing with compressed air, rinsing with water or a combination of these methods as required. Rubber deposits, surface laitance, existing paint markings, and other coatings adhering to the pavement shall be completely removed with scrapers, wire brushes, sandblasting, approved chemicals, or mechanical abrasion as directed. Areas of old pavement affected with oil or grease shall be scrubbed with several applications of trisodium phosphate solution or other approved detergent or degreaser, and rinsed thoroughly after each application. After cleaning, oil-soaked areas shall be sealed with cut shellac to prevent bleeding through the new paint. Pavement surfaces shall be allowed to dry, when water is used for cleaning, prior to striping or marking. Surfaces shall be recleaned, when work has been stopped due to rain.

3.2 APPLICATION

All pavement markings and patterns shall be placed as shown on the plans.

3.2.1 Paint

Paint shall be applied to clean, dry surfaces, and only when air and pavement temperatures are above 5 degrees C and less than 35 degrees C. Paint temperature shall be maintained within these same limits. New asphalt pavement surfaces and new portland concrete cement shall be allowed to cure for a period of not less than 30 days before applications of paint. Paint shall be applied pneumatically with approved equipment at rate of coverage specified herein. The Contractor shall provide guide lines and templates as necessary to control paint application. Special precautions shall be taken in marking numbers, letters, and symbols. Edges of markings shall be sharply outlined.

3.2.1.1 Rate of Application

Nonreflective Markings: Paint shall be applied evenly to the pavement surface to be coated at a rate of 10 plus or minus 0.5 square meter per liter.

3.2.1.2 Drying

The maximum drying time requirements of the paint specifications will be strictly enforced to prevent undue softening of bitumen, and pickup, displacement, or discoloration by tires of traffic. If there is a delay in drying of the markings, painting operations shall be discontinued until cause of the slow drying is determined and corrected.

-- End of Section --

SECTION 02660

WATER DISTRIBUTION SYSTEM

PART 1 GENERAL

1.1 REFERENCES

The publications listed below form a part of this specification to the extent referenced. The publications are referred to in the text by basic designation only.

AMERICAN SOCIETY FOR TESTING AND MATERIALS (ASTM)

ASTM A 36	(1994a) Carbon Structural Steel
ASTM A 53	(1993a) Pipe, Steel, Black and Hot-Dipped, Zinc-Coated Welded and Seamless
ASTM D 1784	(1992) Rigid Poly(Vinyl Chloride) (PVC) Compounds and Chlorinated Poly(Vinyl Chloride) (CPVC) Compounds
ASTM D 1785	(1993) Poly(Vinyl Chloride) (PVC) Plastic Pipe, Schedules 40, 80, and 120
ASTM D 2241	(1993) Poly(Vinyl Chloride) (PVC) Pressure-Rated Pipe (SDR Series)
ASTM D 2464	(1993) Threaded Poly(Vinyl Chloride) (PVC) Plastic Pipe Fittings, Schedule 80
ASTM D 2466	(1993) Poly(Vinyl Chloride) (PVC) Plastic Pipe Fittings, Schedule 40
ASTM D 2467	(1993) Socket-Type Poly(Vinyl Chloride) (PVC) Plastic Pipe Fittings, Schedule 80
ASTM D 2564	(1993) Solvent Cements for Poly(Vinyl Chloride) (PVC) Plastic Piping Systems
ASTM D 2855	(1993) Making Solvent-Cemented Joints with Poly(Vinyl Chloride) (PVC) Pipe and Fittings
ASTM F 477	(1993) Elastomeric Seals (Gaskets) for Joining Plastic Pipe

AMERICAN SOCIETY OF MECHANICAL ENGINEERS (ASME)

ASME B1.20.1	(1983; R 1992) Pipe Threads, General Purpose (Inch)
ASME B16.1	(1989) Cast Iron Pipe Flanges and Flanged Fittings
ASME B16.3	(1992) Malleable Iron Threaded Fittings,

Classes 150 and 300

AMERICAN WATER WORKS ASSOCIATION (AWWA)

AWWA B300	(1992) Hypochlorites
AWWA B301	(1992) Liquid Chlorine
AWWA C104	(1990) Cement-Mortar Lining for Ductile-Iron Pipe and Fittings for Water
AWWA C110	(1993) Ductile-Iron and Gray-Iron Fittings, 3 In. Through 48 In. (75 mm through 1200 mm), for Water and Other Liquids
AWWA C111	(1990) Rubber-Gasket Joints for Ductile-Iron Pressure Pipe and Fittings
AWWA C115	(1988) Flanged Ductile-Iron Pipe with Threaded Flanges
AWWA C151	(1991) Ductile-Iron Pipe, Centrifugally Cast, for Water or Other Liquids
AWWA C153	(1994) Ductile-Iron Compact Fittings, 3 In. Through 16 In., for Water and Other Liquids
AWWA C200	(1991) Steel Water Pipe - 6 In. (150 mm) and Larger
AWWA C203	(1991) Coal-Tar Protective Coatings and Linings for Steel Water Pipelines - Enamel and Tape - Hot-Applied
AWWA C207	(1994) Steel Pipe Flanges for Waterworks Service - Sizes 4 In. Through 144 In.
AWWA C500	(1993) Gate Valves for Water and Sewerage Systems
AWWA C504	(1994) Rubber-Seated Butterfly Valves
AWWA C509	(1994) Resilient-Seated Gate Valves for Water and Sewerage Systems
AWWA C600	(1993) Installation of Ductile-Iron Water Mains and Their Appurtenances
AWWA C606	(1987) Grooved and Shouldered Joints
AWWA C800	(1989) Underground Service Line Valves and Fittings
AWWA C900	(1989; C900a) Polyvinyl Chloride (PVC) Pressure Pipe, 4 In. Through 12 In., for Water Distribution
AWWA M23	(1980) Manual: PVC Pipe - Design and Installation

ASBESTOS CEMENT PIPE PRODUCERS ASSOCIATION (ACPPA)

ACPPA-01	(1988) Recommended Work Practices for A/C Pipe

DUCTILE IRON PIPE RESEARCH ASSOCIATION (DIPRA)

DIPRA-01	(1992; Errata May 1993) Thrust Restraint Design for Ductile Iron Pipe

MANUFACTURERS STANDARDIZATION SOCIETY OF THE VALVE AND FITTINGS INDUSTRY (MSS)

MSS SP-80	(1987) Bronze Gate, Globe, Angle and Check Valves

NATIONAL FIRE PROTECTION ASSOCIATION (NFPA)

NFPA 24	(1992) Installation of Private Fire Service Mains and Their Appurtenances
NFPA 49	(1991) Hazardous Chemicals Data
NFPA 325M	(1991) Fire Hazard Properties of Flammable Liquids, Gases, and Volatile Solids
NFPA 704	(1990) Identification of the Fire Hazards of Materials

NSF INTERNATIONAL (NSF)

NSF Std 14	(1965; Rev Nov 1990) Plastics Piping System Components and Related Materials

1.2 PIPING

This section covers water distribution and service lines, and connections to building service at a point approximately 1.5 m outside buildings and structures to which service is required. The Contractor shall have a copy of the manufacturer's recommendations for each material or procedure to be utilized available at the construction site at all times.

1.2.1 Service Lines

Piping for water service lines for sizes 80 mm (3 inches) and larger shall be galvanized steel, ductile iron or polyvinyl chloride (PVC) plastic through 300 mm (12 inch) nominal diameter, unless otherwise shown or specified.

1.2.2 Distribution Lines 80 mm (3 Inches) or Larger

Piping for water distribution lines 80 mm (3 inches) or larger shall be ductile iron or polyvinyl chloride (PVC) plastic through 300 mm (12 inch) nominal diameter, unless otherwise shown or specified.

1.2.3 NOT USED

1.2.4 Sprinkler Supply Lines

Piping for water lines supplying sprinkler systems for building fire protection shall conform to NFPA 24 from the point of connection with the water distribution system to the building 1.5 m line.

1.2.5 Plastic Pipe

All plastic piping system components (PVC) intended for transportation of potable water shall comply with NSF Std 14 and shall be legibly marked with their symbol.

1.2.6 Excavation, Trenching, and Backfilling

Excavation, trenching, and backfilling shall be in accordance with the applicable provisions of Section 02316 EXCAVATION, TRENCHING, AND BACKFILLING FOR UTILITIES SYSTEMS, except as modified herein.

1.3 NOT USED

1.4 NOT USED

1.5 SUBMITTALS

Government approval is required for submittals with a "GA" designation; submittals having an "FIO" designation are for information only. The following shall be submitted in accordance with Section 01330 SUBMITTAL PROCEDURES:

SD-06 Instructions

Installation; FIO.

The manufacturer's recommendations for each material or procedure to be utilized.

SD-08 Statements

Waste Water Disposal Method; FIO.

The method proposed for disposal of waste water from hydrostatic tests and disinfection, prior to performing hydrostatic tests.

Satisfactory Installation; GA.

A statement signed by the principal officer of the contracting firm stating that the installation is satisfactory and in accordance with the contract drawings and specifications and the manufacturer's prescribed procedures and techniques, upon completion of the project and before final acceptance.

SD-09 Reports

Bacteriological Disinfection; FIO.

Test results from commercial laboratory verifying disinfection.

SD-13 Certificates

Installation; FIO.

A statement signed by the manufacturer's field representative certifying that the Contractor's personnel are capable of properly installing the pipe on the project.

1.6 HANDLING

Pipe and accessories shall be handled so as to ensure delivery to the trench in sound, undamaged condition. Particular care shall be taken not to injure the pipe coating or lining. If the coating or lining of any pipe or fitting is damaged, the repair shall be made by the Contractor at his expense in a satisfactory manner. No other pipe or material of any kind shall be placed inside a pipe or fitting after the coating has been applied. Pipe shall be carried into position and not dragged. Use of pinch bars and tongs for aligning or turning pipe will be permitted only on the bare ends of the pipe. The interior of pipe and accessories shall be thoroughly cleaned of foreign matter before being lowered into the trench and shall be kept clean during laying operations by plugging or other approved method. Before installation, the pipe shall be inspected for defects. Material found to be defective before or after laying shall be replaced with sound material without additional expense to the Government. Rubber gaskets that are not to be installed immediately shall be stored in a cool and dark place.

1.6.1 Coated and Wrapped Steel Pipe

Coated and wrapped steel pipe shall be handled in conformance with AWWA C203.

1.6.2 NOT USED

1.6.3 Miscellaneous Plastic Pipe and Fittings

Polyvinyl Chloride (PVC), pipe and fittings shall be handled and stored in accordance with the manufacturer's recommendations. Storage facilities shall be classified and marked in accordance with NFPA 704, with classification as indicated in NFPA 49 and NFPA 325M.

PART 2 PRODUCTS

2.1 PIPE

Pipe shall conform to the respective specifications and other requirements specified below.

2.1.1 NOT USED

2.1.2 Plastic Pipe

2.1.2.1 NOT USED

2.1.2.2 Polyvinyl Chloride (PVC) Plastic Pipe

Pipe, couplings and fittings shall be manufactured of material conforming to ASTM D 1784, Class 12454B.

a. Pipe Less Than 100 mm (4 inch) Diameter:

(1) Screw-Joint: Pipe shall conform to dimensional requirements of ASTM D 1785 Schedule 80, with joints meeting requirements of 1.03 MPa (150 psi) working pressure, 1.38 MPa (200 psi)

hydrostatic test pressure, unless otherwise shown or specified. Pipe couplings when used, shall be tested as required by ASTM D 2464.

(2) Elastomeric-Gasket Joint: Pipe shall conform to dimensional requirements of ASTM D 1785. Schedule 40 with joints meeting the requirements of 1.03 MPa (150 psi) working pressure, 1.38 MPa (200 psi) hydrostatic test pressure, unless otherwise shown or specified, or it may be pipe conforming to requirements of ASTM D 2241, elastomeric joint, with the following applications:

SDR	Maximum Working Pressure MPa	Minimum Hydrostatic Pressure MPa
26	0.689	0.917
21	0.827	1.103
17	1.034	1.379
13.5	1.379	1.834

(3) Solvent Cement Joint: Pipe shall conform to dimensional requirements of ASTM D 1785 or ASTM D 2241 with joints meeting the requirements of 1.03 MPa (150 psi) working pressure and 1.38 MPa (200 psi) hydrostatic test pressure.

b. Pipe 100 mm (4 inch) through 300 mm (12 Inch) Diameter: Pipe, couplings and fittings shall conform to AWWA C900, Class 150, CIOD pipe dimensions, elastomeric-gasket joint, unless otherwise shown or specified.

2.1.3 NOT USED

2.1.4 NOT USED

2.1.5 Ductile-Iron Pipe

Ductile-iron pipe shall conform to AWWA C151, working pressure not less than 1.03 MPa (150 psi), unless otherwise shown or specified. Pipe shall be cement-mortar lined in accordance with AWWA C104. Linings shall be standard. Flanged ductile iron pipe with threaded flanges shall be in accordance with AWWA C115.

2.1.6 Steel Pipe

2.1.6.1 NOT USED

2.1.6.2 Galvanized-Steel Pipe

Galvanized-steel pipe shall conform to ASTM A 53, standard weight.

2.1.6.3 Protective Materials for Steel Pipe

Protective materials for steel pipe, except as otherwise specified, shall be mechanically applied in a factory or plant especially equipped for the purpose.

a. Pipe and fittings less than 80 mm (3 inches) in diameter shall be thoroughly cleaned of foreign material by wire brushing and solvent cleaning, and then given one coat of coal-tar primer and two coats

of coal-tar enamel conforming to AWWA C203; threaded ends of pipe and fittings shall be adequately protected prior to coating.

2.2 FITTINGS AND SPECIALS

2.2.1 NOT USED

2.2.2 Polyvinyl Chloride (PVC) Pipe

a. For pipe less than 100 mm (4 inch) diameter, fittings for threaded pipe shall conform to requirements of ASTM D 2464, threaded to conform to the requirements of ASME B1.20.1 for use with Schedule 80 pipe and fittings, fittings for solvent cement jointing shall conform to ASTM D 2466 or ASTM D 2467, and fittings for elastomeric-gasket joint pipe shall be iron conforming to AWWA C110 or AWWA C111. Iron fittings and specials shall be cement-mortar lined (standard thickness) in accordance with AWWA C104.

b. For pipe 100 mm (4 inch) diameter and larger, fittings and specials shall be iron, bell end in accordance with AWWA C110, 1.03 MPa (150 psi) pressure rating unless otherwise shown or specified, except that profile of bell may have special dimensions as required by the pipe manufacturer; or may be fittings and specials of the same material as the pipe with elastomeric gaskets, all in conformance with AWWA C900. Iron fittings and specials shall be cement-mortar lined (standard thickness) in accordance with AWWA C104. Fittings shall be bell and spigot or plain end pipe, or as applicable. Ductile iron compact fittings shall be in accordance with AWWA C153.

2.2.3 NOT USED

2.2.4 Ductile-Iron Pipe

Fittings and special shall be suitable for 1.03 MPa (150 psi) pressure rating, unless otherwise specified. Fittings and specials for mechanical joint pipe shall conform to AWWA C110. Fittings and specials for use with push-on joint pipe shall conform to AWWA C110 and AWWA C111. Fittings and specials for grooved and shouldered end pipe shall conform to AWWA C606. Fittings and specials shall be cement-mortar lined (standard thickness) in accordance with AWWA C104. Ductile iron compact fittings shall conform to AWWA C153.

2.2.5 Steel Pipe

2.2.5.1 NOT USED

2.2.5.2 Galvanized-Steel Pipe

Steel fittings shall be galvanized. Screwed fittings shall conform to ASME B16.3. Flanged fittings shall conform to AWWA C207.

2.2.5.3 Dielectric Fittings

Dielectric fittings shall be installed between threaded ferrous and nonferrous metallic pipe, fittings and valves, except where corporation stops join mains. Dielectric fittings shall prevent metal-to-metal contact of dissimilar metallic piping elements and shall be suitable for the required working pressure.

2.3 JOINTS

2.3.1 NOT USED

2.3.2 Plastic Pipe

2.3.2.1 NOT USED

2.3.2.2 Polyvinyl Chloride Pipe

Joints, fittings, and couplings shall be as specified for PVC pipe. Joints connecting pipe of differing materials shall be made in accordance with the manufacturer's recommendations as approved by the Contracting Officer.

2.3.3 NOT USED

2.3.4 NOT USED

2.3.5 Ductile-Iron Pipe

a. Mechanical joints shall be of the stuffing box type and shall conform to AWWA C111.

b. Push-on joints shall conform to AWWA C111.

c. Rubber gaskets and lubricant shall conform to the applicable requirements of AWWA C111.

2.3.6 Steel Pipe

2.3.6.1 NOT USED

2.3.6.2 Mechanical Couplings

Mechanical couplings for steel pipe shall be the sleeve type, or when approved, the split-sleeve type and shall provide a tight flexible joint under all reasonable conditions, such as pipe movements caused by expansion, contraction, slight setting or shifting in the ground, minor variations in trench gradients, and traffic vibrations. Couplings shall be of strength not less than the adjoining pipeline.

2.3.7 Bonded Joints

For all ferrous pipe, a metallic bond shall be provided at each joint, including joints made with flexible couplings, caulking, or rubber gaskets, of ferrous-metallic piping to effect continuous conductivity. The bond wire shall be Size 1/0 copper conductor suitable for direct burial shaped to stand clear of the joint. The bond shall be of the thermal weld type.

2.3.8 Isolation Joints

Isolation joints shall be installed between nonthreaded ferrous and nonferrous metallic pipe, fittings and valves. Isolation joints shall consist of a sandwich-type flange isolation gasket of the dielectric type, isolation washers, and isolation sleeves for flange bolts. Isolation gaskets shall be full faced with outside diameter equal to the flange outside diameter. Bolt isolation sleeves shall be full length. Units shall be of a shape to prevent metal-to-metal contact of dissimilar

metallic piping elements.

a. Sleeve-type couplings shall be used for joining plain end pipe sections. The two couplings shall consist of one steel middle ring, two steel followers, two gaskets, and the necessary steel bolts and nuts to compress the gaskets.

b. Split-sleeve type couplings may be used in aboveground installations when approved in special situations and shall consist of gaskets and a housing in two or more sections with the necessary bolts and nuts.

2.4 VALVES

2.4.1 Check Valves

Check valves shall be designed for a minimum working pressure of 1.03 MPa (150 psi) or as indicated. Valves shall have a clear waterway equal to the full nominal diameter of the valve. Valves shall open to permit flow when inlet pressure is greater than the discharge pressure, and shall close tightly to prevent return flow when discharge pressure exceeds inlet pressure. The size of the valve, working pressure, manufacturer's name, initials, or trademark shall be cast on the body of each valve.

a. Valves 50 mm (2 inches) and smaller shall be all bronze designed for screwed fittings, and shall conform to MSS SP-80, Class 150, Types 3 and 4 as suitable for the application.

b. Valves larger than 50 mm (2 inches) shall be iron body, bronze mounted, shall have flanged ends, and shall be the non-slam type. Flanges shall be the Class 125 type conforming to ASME B16.1.

2.4.2 Gate Valves

Gate valves shall be designed for a working pressure of not less than 1.03 MPa (150 psi). Valve connections shall be as required for the piping in which they are installed. Valves shall have a clear waterway equal to the full nominal diameter of the valve, and shall be opened by turning counterclockwise. The operating nut or wheel shall have an arrow, cast in the metal, indicating the direction of opening.

a. Valves smaller than 80 mm (3 inches) shall be all bronze and shall conform to MSS SP-80, Type 1, Class 150.

b. Valves 80 mm (3 inches) and larger shall be iron body, bronze mounted, and shall conform to AWWA C500. Flanges shall not be buried. An approved pit shall be provided for all flanged connections.

c. Resilient-Seated Gate Valves: For valves 80 to 300 mm (3 to 12 inches) in size, resilient-seated gate valves shall conform to AWWA C509.

2.4.3 Rubber-Seated Butterfly Valves

Rubber-seated butterfly valves shall conform to the performance requirements of AWWA C504. Wafer type valves conforming to the performance requirements of AWWA C504 in all respects, but not meeting laying length requirements will be acceptable if supplied and installed with a spacer

providing the specified laying length. All tests required by AWWA C504 shall be met. Flanged-end valves shall be installed in an approved pit and provided with a union or sleeve-type coupling in the pit to permit removal. Mechanical-end valves 80 mm (3 inches) through 250 mm (10 inches) in diameter may be direct burial if provided with a suitable valve box, means for manual operation, and an adjacent pipe joint to facilitate valve removal. Valve operators shall restrict closing to a rate requiring approximately 60 seconds, from fully open to fully closed.

2.5 VALVE BOXES

Valve boxes shall be cast iron or concrete, except that concrete boxes may be installed only in locations not subjected to vehicular traffic. Cast-iron boxes shall be extension type with slide-type adjustment and with flared base. The minimum thickness of metal shall be 5 mm. Concrete boxes shall be the standard product of a manufacturer of precast concrete equipment. The word "WATER" shall be cast in the cover. The box length shall adapt, without full extension, to the depth of cover required over the pipe at the valve location.

2.6 NOT USED

2.7 NOT USED

2.8 NOT USED

2.9 MISCELLANEOUS ITEMS

2.9.1 Service Clamps

Service clamps shall have a pressure rating not less than that of the pipe to be connected and shall be either the single or double flattened strap type. Clamps shall have a galvanized malleable-iron body with cadmium plated straps and nuts. Clamps shall have a rubber gasket cemented to the body.

2.9.2 Corporation Stops

Corporation stops shall have standard corporation stop thread conforming to AWWA C800 on the inlet end, with flanged joints, compression pattern flared tube couplings, or wiped joints for connections to goosenecks.

2.9.3 NOT USED

2.9.4 Service Stops

Service stops shall be water-works inverted-ground-key type, oval or round flow way, tee handle, without drain. Pipe connections shall be suitable for the type of service pipe used. All parts shall be of bronze with female iron-pipe-size connections or compression-pattern flared tube couplings, and shall be designed for a hydrostatic test pressure not less than 1.375 MPa (200 psi).

2.9.5 Tapping Sleeves

Tapping sleeves of the sizes indicated for connection to existing main shall be the cast gray, ductile, or malleable-iron, split-sleeve type with flanged or grooved outlet, and with bolts, follower rings and gaskets on each end of the sleeve. Construction shall be suitable for a maximum

working pressure of 1.03 MPa (150 psi). Bolts shall have square heads and hexagonal nuts. Longitudinal gaskets and mechanical joints with gaskets shall be as recommended by the manufacturer of the sleeve. When using grooved mechanical tee, it shall consist of an upper housing with full locating collar for rigid positioning which engages a machine-cut hole in pipe, encasing an elastomeric gasket which conforms to the pipe outside diameter around the hole and a lower housing with positioning lugs, secured together during assembly by nuts and bolts as specified, pretorqued to 67.8 Newton meters (50 foot-pound).

2.9.6 Service Boxes

Service boxes shall be cast iron or concrete and shall be extension service boxes of the length required for the depth of the line, with either screw or slide-type adjustment. The boxes shall have housings of sufficient size to completely cover the service stop or valve and shall be complete with identifying covers.

2.9.7 Disinfection

Chlorinating materials shall conform to the following:

Chlorine, Liquid: AWWA B301.

Hypochlorite, Calcium and Sodium: AWWA B300.

PART 3 EXECUTION

3.1 INSTALLATION

3.1.1 Cutting of Pipe

Cutting of pipe shall be done in a neat and workmanlike manner without damage to the pipe. Unless otherwise recommended by the manufacturer and authorized by the Contracting Officer, cutting shall be done with an approved type mechanical cutter. Wheel cutter shall be used when practicable. Copper tubing shall be cut square and all burrs shall be removed. Squeeze type mechanical cutters shall not be used for ductile iron.

3.1.2 Adjacent Facilities

3.1.2.1 Sewer Lines

Where the location of the water pipe is not clearly defined in dimensions on the drawings, the water pipe shall not be laid closer horizontally than 3 m from a sewer except where the bottom of the water pipe will be at least 300 mm above the top of the sewer pipe, in which case the water pipe shall not be laid closer horizontally than 1.8 m from the sewer. Where water lines cross under gravity-flow sewer lines, the sewer pipe for a distance of at least 3 m each side of the crossing shall be fully encased in concrete or shall be made of pressure pipe with no joint located within 900 mm horizontally of the crossing. Water lines shall in all cases cross above sewage force mains or inverted siphons and shall be not less than 600 mm above the sewer main. Joints in the sewer main, closer horizontally than 900 mm to the crossing, shall be encased in concrete.

3.1.2.2 Water Lines

Water lines shall not be laid in the same trench with sewer lines, gas lines, fuel lines, or electric wiring.

3.1.2.3 NOT USED

3.1.2.4 Nonferrous Metallic Pipe

Where nonferrous metallic pipe, e.g. copper tubing, crosses any ferrous piping material, a minimum vertical separation of 300 mm shall be maintained between pipes.

3.1.2.5 Casing Pipe

Water pipe shall be encased in a sleeve of rigid conduit for the lengths shown. Where sleeves are required, the pipe sleeve shall be steel, manufactured in accordance with AWWA C200, ASTM A 36, with a minimum wall thickness of 8 mm. A minimum clearance of at least 50 mm between the inner wall of the sleeve and the maximum outside diameter of the sleeved pipe and joints shall be provided. Sand bedding or suitable pipe support shall be provided for the water pipe through the sleeve.

3.1.2.6 Structures

Where water pipe is required to be installed within 1 m of existing structures, the water pipe shall be sleeved as required in Paragraph "Casing Pipe". The Contractor shall take proper precautions during installation of the water pipe and sleeve to ensure that there will be no damage to the structures and no settlement or movement of foundations or footings.

3.1.3 Joint Deflection

3.1.3.1 NOT USED

3.1.3.2 Flexible Plastic Pipe

Maximum offset in alignment between adjacent pipe joints shall be as recommended by the manufacturer and approved by the Contracting Officer, but in no case shall it exceed 5 degrees.

3.1.3.3 Ductile-Iron Pipe

The maximum allowable deflection shall be as given in AWWA C600. If the alignment requires deflection in excess of the above limitations, special bends or a sufficient number of shorter lengths of pipe shall be furnished to provide angular deflections within the limit set forth.

3.1.3.4 Steel Pipe

For pipe with bell-and-spigot rubber-gasket joints, maximum allowable deflections from a straight line or grade, as required by vertical curves, horizontal curves, or offsets shall be 5 degrees unless a lesser amount is recommended by the manufacturer. Short-radius curves and closures shall be formed by short lengths of pipe or fabricated specials specified.

3.1.4 Placing and Laying

Pipe and accessories shall be carefully lowered into the trench by means of derrick, ropes, belt slings, or other authorized equipment. Under no

circumstances shall any of the water-line materials be dropped or dumped into the trench. Care shall be taken to avoid abrasion of the pipe coating. Except where necessary in making connections with other lines or as authorized by the Contracting Officer, pipe shall be laid with the bells facing in the direction of laying. The full length of each section of pipe shall rest solidly upon the pipe bed, with recesses excavated to accommodate bells, couplings, and joints. Pipe that has the grade or joint disturbed after laying shall be taken up and relaid. Pipe shall not be laid in water or when trench conditions are unsuitable for the work. Water shall be kept out of the trench until joints are complete. When work is not in progress, open ends of pipe, fittings, and valves shall be securely closed so that no trench water, earth, or other substance will enter the pipes or fittings. Where any part of the coating or lining is damaged, the repair shall be made by the Contractor at his expense in a satisfactory manner. Pipe ends left for future connections shall be valved, plugged, or capped, and anchored, as shown.

3.1.4.1 NOT USED

3.1.4.2 Plastic Pipe Installation

PVC pipe shall be installed in accordance with AWWA M23.

3.1.4.3 Connections

Where connections are made between new work and existing mains, the connections shall be made by using specials and fittings to suit the actual conditions. When made under pressure, these connections shall be installed using standard methods as approved by the Contracting Officer. Connections to existing asbestos-cement pipe shall be made in accordance with ACPPA-01.

3.1.4.4 Penetrations

Pipe passing through walls of structures shall be provided with ductile-iron or Schedule 40 steel wall sleeves. Annular space between walls and sleeves shall be filled with rich cement mortar. Annular space between pipe and sleeves shall be filled with mastic.

3.1.5 Jointing

3.1.5.1 NOT USED

3.1.5.2 NOT USED

3.1.5.3 Polyvinyl Chloride (PVC) Plastic Pipe

a. Pipe less than 100 mm (4 inch) diameter: Threaded joints shall be made by wrapping the male threads with approved thread tape or applying an approved lubricant, then threading the joining members together. The joint shall be tightened using strap wrenches to prevent damage to the pipe and/or fitting. To avoid excessive torque, joints shall be tightened no more than one thread past hand-tight. Preformed rubber-ring gaskets for elastomeric-gasket joints shall be made in accordance with requirements of ASTM F 477 and as required herein. All pipe ends for push-on joints shall be beveled to facilitate assembly and marked to indicate when the pipe is fully seated. The gasket shall be prelubricated to prevent displacement. The gasket and ring groove in the bell or coupling shall match. The manufacturer of the pipe or fitting shall supply

the elastomeric gasket. Couplings shall be provided with stops or centering rings to assure that the coupling is centered on the joint. Solvent cement joints shall use sockets conforming to the requirements of ASTM D 2467. The solvent cement used shall meet the requirements of ASTM D 2564; the joint assembly shall be made in accordance with ASTM D 2855 and the manufacturer's specific recommendations.

b. Pipe 100 mm (4 inch) through 300 mm (12 inch) diameter: Joints shall be elastomeric-gasket as specified in AWWA C900. Jointing procedure shall be as specified for pipe less than 100 mm (4 inch) diameter with configuration using elastomeric ring gasket.

3.1.5.4 NOT USED

3.1.5.5 Ductile-Iron Pipe

Mechanical and push-on type joints shall be installed in accordance with AWWA C600 for buried lines or AWWA C606 for grooved and shouldered pipe above ground or in pits.

3.1.5.6 NOT USED

3.1.5.7 Galvanized-Steel Pipe

Screw joints shall be made tight with a stiff mixture of graphite and oil, inert filler and oil, or with an approved graphite compound, applied with a brush to the male threads only. Compounds shall not contain lead.

3.1.5.8 NOT USED

3.1.5.9 Bonded Joints

Bonded joints shall be installed in accordance with details specified for joints in paragraph JOINTS.

3.1.5.10 Isolation Joints and Dielectric Fittings

Isolation joints and dielectric fittings shall be installed in accordance with details specified in paragraph JOINTS. Dielectric unions shall be encapsulated in a field-poured coal-tar covering, with at least 3 mm thickness of coal tar over all fitting surfaces.

3.1.5.11 Connections

Connections between different types of pipe and accessories shall be made with transition fittings approved by the Contracting Officer.

3.1.6 Service Lines

Service lines shall include the pipeline connecting building piping to water distribution lines to the connections with the building service at a point approximately 1.5 m outside the building where such building service exists. Where building services are not installed, the Contractor shall terminate the service lines approximately 1.5 m from the site of the proposed building at a point designated by the Contracting Officer. Such service lines shall be closed with plugs or caps. All service stops and valves shall be provided with service boxes. Service lines shall be constructed in accordance with the following requirements:

3.1.6.1 NOT USED

3.1.6.2 NOT USED

3.1.6.3 NOT USED

3.1.6.4 Service Lines Larger than 50 mm (2 Inches)

Service lines larger than 50 mm (2 inches) shall be connected to the main by a tapped saddle, tapping sleeve and valve, service clamp or reducing tee, depending on the main diameter and the service line diameter, and shall have a gate valve. Lines 80 mm (3 inches) and larger may use rubber-seated butterfly valves as specified above, or gate valves.

3.1.6.5 Service Lines for Sprinkler Supplies

Water service lines used to supply building sprinkler systems for fire protection shall be connected to the water distribution main in accordance with NFPA 24.

3.1.7 Field Coating and Lining of Pipe

3.1.7.1 NOT USED

3.1.7.2 Galvanized-Steel Pipe

Field joints shall be given one coat of coal-tar primer and two coats of coal-tar enamel conforming to AWWA C203. The tests of the coating shall conform to AWWA C203, and any flaws or holidays found in the coating of pipe and joints shall be repaired by patching or other approved means such that the repaired areas will be at least equal in thickness to the minimum coating required for the pipe.

3.1.8 Setting of Fire Hydrants, Meters, Valves and Valve Boxes

3.1.8.1 NOT USED

3.1.8.2 NOT USED

3.1.8.3 Valves

After delivery, valves, including those in hydrants, shall be drained to prevent freezing and shall have the interiors cleaned of all foreign matter before installation. Stuffing boxes shall be tightened and hydrants and valves shall be fully opened and fully closed to ensure that all parts are in working condition. Check, pressure reducing, vacuum, and air relief valves shall be installed in valve pits. Valves and valve boxes shall be installed where shown or specified, and shall be set plumb. Valve boxes shall be centered on the valves. Boxes shall be installed over each outside gate valve unless otherwise shown. Where feasible, valves shall be located outside the area of roads and streets. Earth fill shall be carefully tamped around each valve box or pit to a distance of 1.2 m on all sides of the box, or the undisturbed trench face if less than 1.2 m.

3.1.8.4 Service Boxes

Where water lines are located below paved streets having curbs, the boxes shall be installed directly back of the curbs. Where no curbing exists,

service boxes shall be installed in accessible locations, beyond the limits of street surfacing, walks and driveways.

3.1.9 Tapped Tees and Crosses

Tapped tees and crosses for future connections shall be installed where shown.

3.1.10 Thrust Restraint

Plugs, caps, tees and bends deflecting 11-1/4 degrees or more, either vertically or horizontally, on waterlines 100 mm (4 inches) in diameter or larger, and fire hydrants shall be provided with thrust restraints. Valves shall be securely anchored or shall be provided with thrust restraints to prevent movement. Thrust restraints shall be either thrust blocks or, for ductile-iron pipes, restrained joints.

3.1.10.1 Thrust Blocks

Thrust blocking shall be concrete of a mix not leaner than: 1 cement, 2-1/2 sand, 5 gravel; and having a compressive strength of not less than 14 MPa after 28 days. Blocking shall be placed between solid ground and the hydrant or fitting to be anchored. Unless otherwise indicated or directed, the base and thrust bearing sides of thrust blocks shall be poured directly against undisturbed earth. The sides of thrust blocks not subject to thrust may be poured against forms. The area of bearing shall be as shown or as directed. Blocking shall be placed so that the fitting joints will be accessible for repair. Steel rods and clamps, protected by galvanizing or by coating with bituminous paint, shall be used to anchor vertical down bends into gravity thrust blocks.

3.1.10.2 Restrained Joints

For ductile-iron pipe, restrained joints shall be designed by the Contractor or the pipe manufacturer in accordance with DIPRA-01.

3.2 HYDROSTATIC TESTS

Where any section of a water line is provided with concrete thrust blocking for fitting or hydrants, the hydrostatic tests shall not be made until at least 5 days after installation of the concrete thrust blocking, unless otherwise approved.

3.2.1 Pressure Test

After the pipe is laid, the joints completed, fire hydrants permanently installed, and the trench partially backfilled leaving the joints exposed for examination, the newly laid piping or any valved section of piping shall, unless otherwise specified, be subjected for 1 hour to a hydrostatic pressure test of 1.38 MPa (200 psi). Water supply lines designated on the drawings shall be subjected for 1 hour to a hydrostatic pressure test of 1.38 MPa (200 psi). Each valve shall be opened and closed several times during the test. Exposed pipe, joints, fittings, hydrants, and valves shall be carefully examined during the partially open trench test. Joints showing visible leakage shall be replaced or remade as necessary. Cracked or defective pipe, joints, fittings, hydrants and valves, discovered in consequence of this pressure test shall be removed and replaced with sound material, and the test shall be repeated until the test results are satisfactory. The requirement for the joints to remain exposed for the

hydrostatic tests may be waived by the Contracting Officer when one or more of the following conditions is encountered:

a. Wet or unstable soil conditions in the trench.

b. Compliance would require maintaining barricades and walkways around and across an open trench in a heavily used area that would require continuous surveillance to assure safe conditions.

c. Maintaining the trench in an open condition would delay completion of the contract.

The Contractor may request a waiver, setting forth in writing the reasons for the request and stating the alternative procedure proposed to comply with the required hydrostatic tests. Backfill placed prior to the tests shall be placed in accordance with the requirements of Section 02316 EXCAVATION, TRENCHING, AND BACKFILLING FOR UTILITIES SYSTEMS.

3.2.2 Leakage Test

Leakage test shall be conducted after the pressure tests have been satisfactorily completed. The duration of each leakage test shall be at least 2 hours, and during the test the water line shall be subjected to not less than 1.38 MPa (200 psi) pressure. Water supply lines designated on the drawings shall be subjected to a pressure equal to 1.38 MPa (200 psi). Leakage is defined as the quantity of water to be supplied into the newly laid pipe, or any valved or approved section thereof, necessary to maintain pressure within 34.5 kPa (5 psi) of the specified leakage test pressure after the pipe has been filled with water and the air expelled. No piping installation will be accepted if leakage exceeds the allowable leakage which is determined by the following formula:

L = 0.0002424ND(P raised to 1/2 power)

L = Allowable leakage in Liters per hour
N = Number of joints in the length of pipeline tested
D = Nominal diameter of the pipe in millimeters
P = Average test pressure during the leakage test, in MPa gauge

Should any test of pipe disclose leakage greater than that calculated by the above formula, the defective joints shall be located and repaired until the leakage is within the specified allowance, without additional cost to the Government.

3.2.3 Time for Making Test

Except for joint material setting or where concrete thrust blocks necessitate a 5-day delay, pipelines jointed with rubber gaskets, mechanical or push-on joints, or couplings may be subjected to hydrostatic pressure, inspected, and tested for leakage at any time after partial completion of backfill. Cement-mortar lined pipe may be filled with water as recommended by the manufacturer before being subjected to the pressure test and subsequent leakage test.

3.2.4 Concurrent Hydrostatic Tests

The Contractor may elect to conduct the hydrostatic tests using either or both of the following procedures. Regardless of the sequence of tests employed, the results of pressure tests, leakage tests, and disinfection

shall be satisfactory as specified. All replacement, repair or retesting required shall be accomplished by the Contractor at no additional cost to the Government.

a. Pressure test and leakage test may be conducted concurrently.

b. Hydrostatic tests and disinfection may be conducted concurrently, using the water treated for disinfection to accomplish the hydrostatic tests. If water is lost when treated for disinfection and air is admitted to the unit being tested, or if any repair procedure results in contamination of the unit, disinfection shall be reaccomplished.

3.3 DISINFECTION

3.3.1 Bacteriological Disinfection

Before acceptance of potable water operation, each unit of completed waterline shall be disinfected as specified herein. After pressure tests have been made, the unit to be disinfected shall be thoroughly flushed with water until all entrained dirt and mud have been removed before introducing the chlorinating material. The chlorinating material shall be either liquid chlorine, calcium hypochlorite, or sodium hypochlorite, conforming to paragraph MISCELLANEOUS ITEMS. The chlorinating material shall provide a dosage of not less than 50 ppm and shall be introduced into the water lines in an approved manner. Polyvinyl Chloride (PVC) pipe lines shall be chlorinated using only the above specified chlorinating material in solution. In no case will the agent be introduced into the line in a dry solid state. The treated water shall be retained in the pipe long enough to destroy all non-spore-forming bacteria. Except where a shorter period is approved, the retention time shall be at least 24 hours and shall produce not less than 25 ppm of free chlorine residual throughout the line at the end of the retention period. All valves on the lines being disinfected shall be opened and closed several times during the contact period. The line shall then be flushed with clean water until the residual chlorine is reduced to less than 1.0 ppm. During the flushing period, each fire hydrant on the line shall be opened and closed several times. From several points in the unit, personnel from the Contractor's commercial laboratory shall take at least 3 water samples from different points, approved by the Contracting Officer, in proper sterilized containers and perform a bacterial examination in accordance with state approved methods. The commercial laboratory must be certified by the state's approving authority for examination of potable water. The disinfection shall be repeated until tests indicate the absence of pollution for at least 2 full days. The unit will not be accepted until satisfactory bacteriological results have been obtained.

3.4 CLEANUP

Upon completion of the installation of water lines, and appurtenances, all debris and surplus materials resulting from the work shall be removed.

-- End of Section --

SECTION 02685

GAS DISTRIBUTION SYSTEM

PART 1 GENERAL

1.1 REFERENCES

The publications listed below form a part of this specification to the extent referenced. The publications are referred to in the text by basic designation only.

AMERICAN GAS ASSOCIATION (AGA)

AGA-01	(1989) A.G.A. Plastic Pipe Manual for Gas Service

AMERICAN NATIONAL STANDARDS INSTITUTE (ANSI)

ANSI B109.2	(1992) Diaphragm Type Gas Displacement Meters (Over 500 Cubic Feet per Hour Capacity)

AMERICAN PETROLEUM INSTITUTE (API)

API Spec 5L	(1995) Line Pipe

AMERICAN SOCIETY FOR TESTING AND MATERIALS (ASTM)

ASTM A 53	(1996) Pipe, Steel, Black and Hot-Dipped, Zinc-Coated Welded and Seamless
ASTM A 181	(1995b) Forgings, Carbon Steel, for General-Purpose Piping
ASTM D 2513	(1995c) Thermoplastic Gas Pressure Pipe, Tubing, and Fittings
ASTM D 2683	(1993) Socket-Type Polyethylene Fittings for Outside Diameter-Controlled Polyethylene Pipe and Tubing
ASTM D 3261	(1993) Butt Heat Fusion Polyethylene (PE) Plastic Fittings for Polyethylene (PE) Plastic Pipe and Tubing
ASTM D 3308	(1991a) PTFE Resin Skived Tape
ASTM D 3350	(1993) Polyethylene Plastics Pipe and Fittings Materials

AMERICAN SOCIETY OF MECHANICAL ENGINEERS (ASME)

ASME B1.20.1	(1983; R 1992) Pipe Threads, General Purpose (Inch)

ASME B16.5	(1988; Errata Oct 1988; B16.5a) Pipe Flanges and Flanged Fittings
ASME B16.9	(1993) Factory-Made Wrought Steel Buttwelding Fittings
ASME B16.11	(1991) Forged Fittings, Socket-Welding and Threaded
ASME B16.21	(1992) Nonmetallic Flat Gaskets for Pipe Flanges
ASME B16.40	(1985; R 1994) Manually Operated Thermoplastic Gas Shutoffs and Valves in Gas Distribution Systems
ASME B31.8	(1995) Gas Transmission and Distribution Piping Systems

CODE OF FEDERAL REGULATIONS (CFR)

49 CFR 192	Transportation of Natural and Other Gas by Pipeline: Minimum Federal Safety Standards

MANUFACTURERS STANDARDIZATION SOCIETY OF THE VALVE AND FITTINGS INDUSTRY (MSS)

MSS SP-25	(1993) Standard Marking System for Valves, Fittings, Flanges and Unions

NACE INTERNATIONAL (NACE)

NACE RP0185	(1985) Extruded, Polyolefin Resin Coating Systems for Underground or Submerged Pipe

NATIONAL FIRE PROTECTION ASSOCIATION (NFPA)

NFPA 54	(1996; Errata) National Fuel Code

NATIONAL FUEL (GAS COMPANY)

NFOPM	National Fuel Operating Procedures Manual; National Fuel, 10 LaFayette Square, Buffalo, NY 14203, (800) 365-3234

STEEL STRUCTURES PAINTING COUNCIL (SSPC)

SSPC Paint 25	(1991) Red Iron Oxide, Zinc Oxide, Raw Linseed Oil and Alkyd Primer (Without Lead and Chromate Pigments)
SSPC Paint 104	(1991) White or Tinted Alkyd Paint
SSPC SP 1	(1982) Solvent Cleaning
SSPC SP 3	(1995) Power Tool Cleaning
SSPC SP 7	(1994) Brush-Off Blast Cleaning

UNDERWRITERS LABORATORIES (UL)

UL-06 (1996) Gas and Oil Equipment Directory

1.2 GENERAL REQUIREMENTS

1.2.1 Welding Steel Piping

Welding and nondestructive testing procedures for pressure piping are specified in Section 15052 WELDING, PRESSURE PIPING. Structural members shall be welded in accordance with Section 05055 WELDING, STRUCTURAL.

1.2.2 Jointing Polyethylene Piping

Piping shall be joined by performance qualified joiners using qualified procedures in accordance with AGA-01 and who are certified by National Fuel in accordance with NFOPM. Manufacturer's prequalified joining procedures shall be used. Joints shall be inspected by an inspector qualified in the joining procedures being used and in accordance with AGA-01. Joiners and inspectors shall be qualified at the jobsite by a person who has been trained and certified by the manufacturer of the pipe, to train and qualify joiners and inspectors in each joining procedure to be used on the job. Training shall include use of equipment, explanation of the procedure, and successfully making joints which pass tests specified in AGA-01. The Contracting Officer shall be notified at least 24 hours in advance of the date to qualify joiners and inspectors.

1.2.3 Standard Products

Materials and equipment shall be the standard products of a manufacturer regularly engaged in the manufacture of the products and shall essentially duplicate items that have been in satisfactory use for at least 2 years prior to bid opening. Asbestos or products containing asbestos shall not be used. Equipment shall be supported by a service organization that is, in the opinion of the Contracting Officer, reasonably convenient to the site. Valves, flanges, and fittings shall be marked in accordance with MSS SP-25.

1.2.4 Verification of Dimensions

The Contractor shall become familiar with all details of the work, verify all dimensions in the field, and shall advise the Contracting Officer of any discrepancy before performing the work.

1.2.5 Handling

Pipe and components shall be handled carefully to ensure a sound, undamaged condition. Particular care shall be taken not to damage pipe coating. No pipe or material of any kind shall be placed inside another pipe or fitting after the coating has been applied, except as specified in paragraph INSTALLATION. Plastic pipe shall be handled in conformance with AGA-01.

1.3 SUBMITTALS

Government approval is required for submittals with a "GA" designation; submittals having an "FIO" designation are for information only. The following shall be submitted in accordance with Section 01330 SUBMITTAL PROCEDURES:

SD-04 Drawings

Pipe, Fittings, and Associated Materials; FIO.

Drawings shall contain complete schematic and piping diagrams and any other details required to demonstrate that the system has been coordinated and will properly function as a unit. Drawings shall show proposed layout and anchorage of the system and appurtenances, and equipment relationship to other parts of the work including clearances for maintenance and operation.

SD-07 Schedules

Equipment and Materials; FIO.

A complete list of equipment and materials, including manufacturer's descriptive and technical literature, performance charts and curves, catalog cuts, and installation instructions, including, but not limited to the following:

a. Dielectric Unions and Flange Kits.

b. Meters.

c. Pressure Reducing Valves.

d. Regulators.

Spare Parts Data; FIO.

Spare parts lists for each different item of material and equipment specified, after approval of the detail drawings and not later than 3 months prior to the date of beneficial occupancy. The data shall include a complete list of parts and supplies, with current unit prices and source of supply.

Notification; FIO.

Notification to Contracting Officer and National Fuel of the Contractor's schedule for making connections to existing gas lines, at least 10 days in advance.

SD-08 Statements

Welding Steel Piping; FIO.

A copy of qualified welding procedures along with a list of names and identification symbols of performance qualified welders and welding operators.

Jointing Polyethylene Piping; GA.

A copy of qualified jointing procedures, training procedures, qualifications of trainer, and training test results for joiners and inspectors.

Connection and Abandonment Procedures; GA.

A copy of procedures for gas line tie in, hot taps, abandonment/removal or demolition, purging, and plugging as applicable in accordance with ASME

B31.8.

SD-13 Certificates

Utility Work; FIO.

Certification from the Operating Agency/Utility Company that work for which the Utility is responsible has been completed.

Training; FIO.

A copy of each inspector's and jointer's training certificate with respective test results.

SD-19 Operation and Maintenance Manuals

Gas Distribution System; FIO.

Six copies, in booklet form and indexed, of site specific natural gas operation and maintenance manual for each gas distribution system including system operation, system maintenance, equipment operation, and equipment maintenance manuals described below. If operation and maintenance manuals are provided in a common volume, they shall be clearly differentiated and separately indexed.

The System Operation Manual shall include but not be limited to the following:

a. Maps showing piping layout and locations of all system valves and gas line markers.

b. Step-by-step procedures required for system startup, operation, and shutdown. System components and equipment shall be indexed to the gas maps.

c. Isolation procedures and valve operations to shut down or isolate each section of the system. Valves and other system components shall be indexed to the gas maps.

d. Descriptions of Site Specific Standard Operation Procedures including permanent and temporary pipe repair procedures, system restart and test procedures for placing repaired lines back in service, and procedures for abandoning gas piping and system components.

e. Descriptions of Emergency Procedures including: isolation procedures including required valve operations with valve locations indexed to gas map, recommended emergency equipment, checklist for major emergencies and procedures for connecting emergency gas supply.

The Equipment Operation Manual shall include but not be limited to detail drawings, equipment data, and manufacturer supplied operation manuals for all equipment, valves and system components.

The System Maintenance Manuals shall include but not be limited to:

a. Maintenance check list for entire gas distribution system.

b. Descriptions of site specific standard maintenance procedures.

c. Maintenance procedures for installed cathodic protection systems.

d. Piping layout, equipment layout, and control diagrams of the systems as installed.

e. Identification of pipe materials and manufacturer by location, pipe repair procedures, and jointing procedures at transitions to other piping materials or piping from different manufacturer.

The Equipment Maintenance Manuals shall include but not be limited to the following:

a. Identification of valves and other equipment by materials, manufacturer, vendor identification and location.

b. Maintenance procedures and recommended maintenance tool kits for all valves and equipment.

c. Recommended repair methods, either field repair, factory repair, or whole-item replacement for each valve component or piece of equipment or component item.

d. Routine maintenance procedures, possible breakdowns and repairs, and troubleshooting guide.

PART 2 PRODUCTS

2.1 PIPE, FITTINGS, AND ASSOCIATED MATERIALS

2.1.1 Steel Pipe

Steel pipe shall conform to ASTM A 53, Grade A or B, Type E or S, Schedule 40; or API Spec 5L seamless or electric resistance welded, Schedule 40, black steel pipe as specified in ASME B31.8. Steel pipe shall only be used aboveground outside the building.

2.1.2 Small Fittings

Fittings 40 mm (1-1/2 inches) and smaller shall conform to ASME B16.11.

2.1.3 Fittings, 50 mm (2 Inches) and Larger

Pipe flanges and flanged fittings including bolts, nuts, and bolt patterns shall be in accordance with ASME B16.5. Buttweld fittings shall be in accordance with ASME B16.9. Weld neck flanges shall be used.

2.1.4 Steel Forged Branch Connections

Connections shall conform to ASTM A 181, Class 60, carbon steel.

2.1.5 Flange Gaskets

Gaskets shall be non-asbestos compressed material in accordance with ASME B16.21, 1.6 mm (1/16 inch) minimum thickness, full face or self-centering flat ring type. The gaskets shall contain aramid fibers bonded with nitrile butadiene rubber (NBR), or glass fibers bonded with polytetrafluorethylene, suitable for maximum 315 degrees C service and

meeting applicable requirements of ASME B31.8.

2.1.6 Pipe Threads

Pipe threads shall conform to ASME B1.20.1.

2.1.7 Polyethylene Pipe, Tubing, Fittings and Joints

Polyethylene pipe, tubing, fittings and joints shall conform to ASTM D 3350 and ASTM D 2513, pipe designations PE 2406 and PE 3408, rated SDR 11 or less, as specified in ASME B31.8. Pipe sections shall be marked as required by ASTM D 2513. Butt fittings shall conform to ASTM D 3261 and socket fittings shall conform to ASTM D 2683. Fittings shall match the service rating of the pipe.

2.1.8 NOT USED

2.1.9 Sealants for Steel Pipe Threaded Joints

2.1.9.1 Sealing Compound

Joint sealing compound shall be as listed in UL-06, Class 20 or less.

2.1.9.2 Tape

Polytetrafluoroethylene tape shall conform to ASTM D 3308.

2.1.10 Identification

Pipe flow markings and metal tags for each valve, meter, and regulator shall be provided as required by the Contracting Officer.

2.1.11 Insulating Joint Materials

Insulating joint materials shall be provided between flanged or threaded metallic pipe systems where shown to isolate galvanic or electrolytic action.

2.1.11.1 Threaded Joints

Joints for threaded pipe shall be steel body nut type dielectric type unions with insulating gaskets.

2.1.11.2 Flanged Joints

Joints for flanged pipe shall consist of full face sandwich-type flange insulating gasket of the dielectric type, insulating sleeves for flange bolts and insulating washers for flange nuts.

2.1.12 Gas Transition Fittings

Gas transition fittings shall be manufactured steel fittings approved for jointing steel and polyethylene pipe. Approved transition fittings are those that conform to AGA-01 requirements for transition fittings.

2.2 VALVES

Valves shall be suitable for shutoff or isolation service and shall conform to the following:

2.2.1 NOT USED

2.2.2 NOT USED

2.2.3 Polyethylene Valves

Polyethylene valves shall conform to ASME B16.40. Polyethylene valves, in sizes 15 mm to 150 mm (1/2 inch to 6 inches), may be used with polyethylene distribution and service lines, in lieu of steel valves, for underground installation only.

2.3 PRESSURE REGULATORS

Regulators shall have ferrous bodies, shall provide backflow and vacuum protection, and shall be designed to meet the pressure, load and other service conditions.

2.3.1 NOT USED

2.3.2 Service Line Regulators

Pressure regulators for individual service lines shall have ferrous bodies. Regulator shall be capable of reducing distribution line pressure to pressures required for users. Regulators shall be provided where gas will be distributed at pressures in excess of 2.5 kPa (10 inches of water column). Pressure relief shall be set at a lower pressure than would cause unsafe operation of any connected user. Regulator shall have single port with orifice diameter no greater than that recommended by the manufacturer for the maximum gas pressure at the regulator inlet. Regulator valve vent shall be of resilient materials designed to withstand flow conditions when pressed against the valve port. Regulator shall be capable of regulating downstream pressure within limits of accuracy and shall be capable of limiting the buildup of pressure under no-flow conditions to 50 percent or less of the discharge pressure maintained under flow conditions. Regulator shall have a self contained service regulator. Regulator pipe connections shall not exceed 50 mm (2 inch) size.

2.4 METERS

Meters shall conform to ANSI B109.2. Meters shall be pipe mounted and be provided with a strainer immediately upstream. Meters shall be provided with over-pressure protection as specified in ASME B31.8, tamper-proof protection, frost protection and fungus-proof protection. Meters shall be suitable for accurately measuring and handling gas at pressures, temperatures, and flow rates indicated. Meters shall have a pulse switch initiator capable of operating up to speeds of 500 pulses per minute with no false pulses and shall require no field adjustments. Initiators shall provide the maximum number of pulses up to 500 per minute that is obtainable from the manufacturer. It shall provide not less than one pulse per 2.83 cubic meter (100 cubic feet) of gas.

2.5 NOT USED

2.6 PROTECTIVE COVERING MATERIALS

2.6.1 Thermoplastic Resin Coating System

Continuously extruded polyethylene and adhesive coating system materials

shall conform to NACE RP0185, Type A.

PART 3 EXECUTION

3.1 EXCAVATION AND BACKFILLING

Earthwork shall be as specified in Section 02316 EXCAVATION, TRENCHING, AND BACKFILLING FOR UTILITIES SYSTEMS.

3.2 NOT USED

3.3 SERVICE LINES

Contractor shall contact Natural Fuel for installation requirements. Service lines shall be constructed of materials specified for gas mains and shall extend from a gas main to and including the point of delivery within 1.5 meters (5 feet) of the building. The point of delivery is the meter set assembly and service regulator. The service lines shall be connected to the gas mains as indicated. Where indicated, service line shall be provided with an isolation valve of the same size as the service line. The service lines shall be as short and as straight as practicable between the point of delivery and the gas main and shall not be bent or curved laterally unless necessary to avoid obstructions or otherwise permitted. Service lines shall be laid with as few joints as practicable using standard lengths of pipe. Shorter lengths shall be used only for closures. Polyethylene service lines shall not be installed aboveground except as permitted in ASME B31.8.

3.4 WORKMANSHIP AND DEFECTS

Pipe, tubing, and fittings shall be clear and free of cutting burrs and defects in structure or threading and shall be thoroughly brushed and blown free of chips and scale. Defective pipe, tubing, or fittings shall be replaced and shall not be repaired.

3.5 PROTECTIVE COVERING

3.5.1 NOT USED

3.5.2 Protective Covering for Aboveground Piping Systems

Finish painting shall conform to the applicable paragraphs of Section 09900 PAINTING, GENERAL and as follows:

3.5.2.1 Ferrous Surfaces

Shop primed surfaces shall be touched up with ferrous metal primer same type paint as the shop primer. Surfaces that have not been shop primed shall be solvent-cleaned in accordance with SSPC SP 1. Surfaces that contain loose rust, loose mill scale, and other foreign substances shall be mechanically cleaned by power wire brushing in accordance with SSPC SP 3 or brush-off blast cleaned in accordance with SSPC SP 7 and primed with ferrous metal primer in accordance with SSPC Paint 25. Primed surfaces shall be finished with two coats of exterior alkyd paint conforming to SSPC Paint 104.

3.5.2.2 Nonferrous Surfaces

Nonferrous surfaces shall not be painted.

3.5.3 Protective Covering for Piping in Valve Boxes and Manholes

Piping in valve boxes or manholes shall receive protective coating as specified for underground pipe.

3.6 INSTALLATION

Gas distribution system and equipment shall be installed in conformance with the manufacturer's recommendations and applicable sections of ASME B31.8, AGA-01 and 49 CFR 192, NFPA 54, and NFOPM. Abandoning existing gas piping shall be done in accordance with ASME B31.8. Pipe shall be cut without damaging the pipe. Unless otherwise authorized, cutting shall be done by an approved type of mechanical cutter. Wheel cutters shall be used where practicable. On steel pipe 150 mm (6 inches and larger, an approved gas-cutting-and-beveling machine may be used. Cutting of plastic pipe shall be in accordance with AGA-01. Valve installation in plastic pipe shall be designed to protect the plastic pipe against excessive torsional or shearing loads when the valve is operated and from other stresses which may be exerted through the valve or valve box.

3.6.1 Installing Pipe Underground

Gas service lines shall be graded as indicated. Service lines shall have 600 mm minimum cover; and shall be placed on firmly compacted select material for the full length. Where indicated, the main shall be encased, bridged, or designed to withstand any anticipated external loads as specified in ASME B31.8. The encasement material shall be standard weight black steel pipe with a protective coating as specified. The pipe shall be separated from the casing by insulating spacers and sealed at the ends with casing bushings. Trench shall be excavated below pipe grade, bedded with bank sand, and compacted to provide full-length bearing. Laying the pipe on blocks to produce uniform grade will not be permitted. The pipe shall be clean inside before it is lowered into the trench and shall be kept free of water, soil, and all other foreign matter that might damage or obstruct the operation of the valves, regulators, meters, or other equipment. When work is not in progress, open ends of pipe or fittings shall be securely closed by expandable plugs or other suitable means. Minor changes in line or gradient of pipe that can be accomplished through the natural flexibility of the pipe material without producing permanent deformation and without overstressing joints may be made when approved. Changes in line or gradient that exceed the limitations specified shall be made with fittings. When polyethylene piping is installed underground, foil backed magnetic tape shall be placed above the pipe to permit locating with a magnetic detector. After laying of pipe and testing, trench shall be backfilled in accordance with Section 02316 EXCAVATION, TRENCHING AND BACKFILLING FOR UTILITY SYSTEMS.

3.6.2 Installing Pipe Aboveground

Aboveground piping shall be protected against dirt and other foreign matter as specified for underground piping. Joints in steel pipe shall be welded; however joints in pipe 40 mm (1-1/2 inches) in diameter and smaller may be threaded; joints may also be threaded to accommodate the installation of valves. Flanges shall be of the weld neck type to match wall thickness of pipe.

3.7 PIPE JOINTS

Pipe joints shall be designed and installed to effectively sustain the longitudinal pullout forces caused by the contraction of piping or superimposed loads.

3.7.1 Threaded Steel Joints

Threaded joints in steel pipe shall have tapered threads evenly cut and shall be made with UL approved graphite joint sealing compound for gas service or polytetrafluoroethylene tape applied to the male threads only. Caulking of threaded joints to stop or prevent leaks will not be permitted.

3.7.2 Welded Steel Joints

Gas pipe weldments shall be as indicated. Changes in direction of piping shall be made with welding fittings only; mitering or notching pipe to form elbows and tees or other similar type construction will not be permitted. Branch connection may be made with either welding tees or forged branch outlet fittings. Branch outlet fittings shall be forged, flared for improvement of flow where attached to the run, and reinforced against external strains. Beveling, alignment, heat treatment, and inspection of weld shall conform to ASME B31.8. Weld defects shall be removed and repairs made to the weld, or the weld joints shall be entirely removed and rewelded. After filler metal has been removed from its original package, it shall be protected or stored so that its characteristics or welding properties are not affected adversely. Electrodes that have been wetted or have lost any of their coating shall not be used.

3.7.3 Polyethylene Jointing Procedures

Jointing procedures shall conform to AGA-01. Indiscriminate heat fusion joining of plastic pipe or fittings made from different polyethylene resins by classification or by manufacturer shall be avoided if other alternative joining procedures are available. If heat fusion joining of dissimilar polyethylenes is required, special procedures are required. The method of heat fusion joining dissimilar polyethylene resins shall be tested in accordance with paragraph TESTS, subparagraph Destructive Tests of Plastic Pipe Joints.

3.7.4 Connections Between Metallic and Plastic Piping

Connections shall be made only outside, underground, and with approved transition fittings.

3.8 VALVE BOXES

Valve boxes of cast iron not less than 4.7 mm (3/16 inch) thick shall be installed at each underground valve except where concrete or other type of housing is indicated. Valve boxes shall be provided with locking covers that require a special wrench for removal. Wrench shall be furnished for each box. The word "gas" shall be cast in the box cover. When the valve is located in a roadway, the valve box shall be protected by a suitable concrete slab at least 1 square meter. When in a sidewalk, the top of the box shall be in a concrete slab 600 mm square and set flush with the sidewalk. Boxes shall be adjustable extension type with screw or slide-type adjustments. Valve boxes shall be separately supported, not resting on the pipe, so that no traffic loads can be transmitted to the pipe. Valves shall only be located in valve boxes or inside of buildings.

3.9 DRIPS

Drips shall be installed at locations where indicated. Drips shall conform to the details shown or may be commercial units of approved type and capacity. A blow off pipe 32 mm (1-1/4 inches) or larger shall be connected to each drip at its lowest point and shall extend to or near the ground surface at a convenient location away from traffic. Discharge for each drip terminal (outlet) shall be provided with a reducing fitting, a plug valve, and a 15 mm (1/2 inch nipple turned down. The discharge terminal (outlet) shall be inside a length of 300 mm or larger vitrified clay pipe, concrete sewer pipe or concrete terminal box set vertically on a bed of coarse gravel 300 mm thick and 1 m square, and closed at the ground surface with a suitable replacement cover.

3.10 PRESSURE REGULATOR INSTALLATION

3.10.1 NOT USED

3.10.2 Service Line Regulators

A shutoff valve, meter set assembly, and service regulator shall be installed on the service line outside the building, 450 mm above the ground on the riser. An insulating joint shall be installed on the inlet side of the meter set assembly and service regulator and shall be constructed to prevent flow of electrical current. A 10 mm (3/8 inch) tapped fitting equipped with a plug shall be provided on both sides of the service regulator for installation of pressure gauges for adjusting the regulator. All service regulator vents and relief vents shall terminate in the outside air in rain and insect resistant fittings. The open end of the vent shall be located where gas can escape freely into the atmosphere, away from any openings into the building and above areas subject to flooding.

3.11 METER INSTALLATION

Meters shall be installed in accordance with ASME B31.8. Permanent gas meters shall be installed with provisions for isolation and removal for calibration and maintenance, and shall be suitable for operation in conjunction with an energy monitoring and control system.

3.12 CONNECTIONS TO EXISTING LINES

Connections between new work and existing gas lines, where required, shall be made in accordance with ASME B31.8 using proper fittings to suit the actual conditions. When connections are made by tapping into a gas main, the connecting fittings shall be the same size as the pipe being connected.

3.12.1 Connections to Publicly or Privately Operated Gas Utility Lines

Contractor shall provide materials for the connections to the existing gas lines. Final connections and the turning on of gas shall be made by the utility. Existing lines that are to be a abandoned or taken out of service shall be disconnected, purged and capped, plugged or otherwise effectively sealed by the Utility. The Contractor shall notify the Contracting Officer, in writing, 10 days before final connections and turning on of gas lines. The Contractor shall make necessary arrangements with the Utility for tie in and activation of new gas lines. Only National Fuel, the Operating Agency/Utility Company may reactivate the system after tie in. The Contractor shall furnish a certification by the Operating Agency/Utility Company that all Utility work has been satisfactorily completed.

3.13 NOT USED

3.14 TESTS

3.14.1 Destructive Tests of Plastic Pipe Joints

Each day, prior to making polyethylene heat fusion joints or fiberglass adhesive joints, a joint of each size and type to be installed that day shall be made by each person performing joining of plastic pipe that day and destructively tested. At least 3 longitudinal straps shall be cut from each joint. Each strap shall be visually examined, shall not contain voids or discontinuities on the cut surfaces of the joint area, and shall be deformed by bending, torque, or impact, and if failure occurs, it must not initiate in the joint area. If a joint fails the visual or deformation test, the qualified joiner who made that joint shall not make further field joints in plastic pipe on this job until that person has been retrained and requalified. The results of the destructive tests shall be recorded to include the date and time of the tests, size and type of the joints, ambient conditions, fusion iron temperature and names of inspectors and joiners.

3.14.2 Pressure and Leak Tests

The system of gas mains and service lines shall be tested after construction and before being placed in service using air as the test medium. The normal operating pressure for the system is 35 kPa. The test pressure is 620 kPa. Prior to testing the system, the interior shall be blown out, cleaned and cleared of all foreign materials. All meters, regulators, and controls shall be removed before blowing out and cleaning and reinstalled after clearing of all foreign materials. Testing of gas mains and service lines shall be done with due regard for the safety of employees and the public during the test. Persons not working on the test operations shall be kept out of the testing area while testing is proceeding. The test shall be made on the system as a whole or on sections that can be isolated. Joints in sections shall be tested prior to backfilling when trenches must be backfilled before the completion of other pipeline sections. The test shall continue for at least 24 hours from the time of the initial readings to the final readings of pressure and temperature. The initial test readings of the instrument shall not be made for at least 1 hour after the pipe has been subjected to the full test pressure, and neither the initial nor final readings shall be made at times of rapid changes in atmospheric conditions. The temperatures shall be representative of the actual trench conditions. There shall be no indication of reduction of pressure during the test after corrections have been made for changes in atmospheric conditions in conformity with the relationship T(1)P(2)=T(2)P(1), in which T and P denote absolute temperature and pressure, respectively, and the numbers denote initial and final readings. During the test, the entire system shall be completely isolated from all compressors and other sources of air pressure. Each joint shall be tested by means of soap and water or an equivalent nonflammable solution prior to backfilling or concealing any work. The testing instruments shall be approved by the Contracting Officer. All labor, materials and equipment for conducting the tests shall be furnished by the Contractor and shall be subject to inspection at all times during the tests. The Contractor shall maintain safety precautions for air pressure testing at all times during the tests. If the test pressure is left on and unattended, tag each end of service indicating "line under pressure."

-- End of Section --

SECTION 02714

DRAINAGE LAYER

PART 1 GENERAL

1.1 REFERENCES

The publications listed below form a part of this specification to the extent referenced. The publications are referred to in the text by basic designation only.

AMERICAN SOCIETY FOR TESTING AND MATERIALS (ASTM)

ASTM C 29/C 29M	(1991a) Unit Weight and Voids in Aggregate
ASTM C 88	(1990) Soundness of Aggregates by Use of Sodium Sulfate or Magnesium Sulfate
ASTM C 117	(1995) Materials Finer Than 75 micrometer (No. 200) Sieve in Mineral Aggregates by Washing
ASTM C 131	(1996) Resistance to Degradation of Small-Size Coarse Aggregate by Abrasion and Impact in the Los Angeles Machine
ASTM C 136	(1996a) Sieve Analysis of Fine and Coarse Aggregates
ASTM D 75	(1987; R 1992) Sampling Aggregates
ASTM D 2487	(1993) Classification of Soils for Engineering Purposes (Unified Soil Classification System)
ASTM D 2922	(1996) Density of Soil and Soil-Aggregate in Place by Nuclear Methods (Shallow Depth)
ASTM D 3017	(1988; R 1993) Water Content of Soil and Rock In Place by Nuclear Methods (Shallow Depth)
ASTM D 4791	(1995) Flat Particles, Elongated Particles, or Flat and Elongated Particles in Coarse Aggregates
ASTM E 548	(1994) General Criteria Used for Evaluating Laboratory Competence

1.2 NOT USED

1.3 SYSTEM DESCRIPTION

The Contractor shall build a drainage layer under the pavements as

indicated and in accordance with the following subparagraphs:

1.3.1 Aggregate Drainage Layer

A drainage layer consisting of rapid draining materials (RDM) or a combination of open graded materials (OGM) stabilized with choke stone meeting the gradations of Table I.

1.4 SUBMITTALS

Government approval is required for submittals with a "GA" designation; submittals having an "FIO" designation are for information only. The following shall be submitted in accordance with Section 01330 SUBMITTAL PROCEDURES:

SD-09 Reports

Sampling and Testing; GA.

Copies of field test results within 24 hours of completion of tests.

Approval of Materials; GA.

Material sources and material test results prior to field use.

Evaluation; GA.

Test section construction report.

SD-18 Records

Waybills and Delivery Tickets; FIO.

Certified waybills and delivery tickets for all aggregates actually used.

1.5 FIELD COMPACTION

Field compaction requirements shall be based on the results of a test section constructed by the Contractor, using the materials, methods, and equipment proposed for use in the work. The test section shall meet the requirements of paragraph TEST SECTION.

1.6 EQUIPMENT

1.6.1 General Requirements

All plant, equipment, and tools used in the performance of the work will be subject to approval before the work is started and shall be maintained in satisfactory working condition at all times.

1.6.2 Placement Equipment

An asphalt paving machine shall be used to place drainage layer material. Alternate methods may be used if it can be demonstrated in the test section that these methods obtain the specified results.

1.6.3 Compaction Equipment

A dual or single smooth drum roller which provides a maximum compactive

effort without crushing the drainage layer aggregate shall be used to compact drainage layer material.

1.7 WEATHER LIMITATION

Drainage layer material shall be placed when the atmospheric temperature is above 2 degrees C. Areas of completed drainage layer or underlying courses that are damaged by freezing, rainfall, or other weather conditions or by contamination from sediments, dust, dirt, or foreign material shall be corrected by the Contractor to meet specified requirements.

1.8 SAMPLING AND TESTING

1.8.1 General Requirements

Sampling and testing shall be the responsibility of the Contractor. Sampling and testing shall be performed by an approved commercial testing laboratory, or by the Contractor subject to approval. If the Contractor elects to establish testing facilities of his own, approval of such facilities shall be based on compliance with ASTM E 548, and no work requiring testing will be permitted until the Contractor's facilities have been inspected and approved. The first inspection of the facilities will be at the expense of the Government and any subsequent inspections required because of failure of the first inspection shall be at the expense of the Contractor. Such costs will be deducted from the total amount due the Contractor. Drainage layer materials shall be tested to establish compliance with the specified requirements.

1.8.2 Sampling

Aggregate samples shall be taken in accordance with ASTM D 75.

1.8.3 Test Methods

1.8.3.1 Sieve Analyses

Sieve analyses shall be made in accordance with ASTM C 117 and ASTM C 136.

1.8.3.2 Density Tests

Field density tests shall be made in accordance with ASTM D 2922. When using this method, ASTM D 3017 shall be used to determine the moisture content of the aggregate drainage layer material. The calibration curves furnished with the moisture gauges shall be checked along with density calibration checks as described in ASTM D 3017. The calibration checks of both the density and moisture gauges shall be made by the prepared containers of material method, as described in paragraph "Calibration" of ASTM D 2922, on each different type of material being tested at the beginning of a job and at intervals as directed by the Contracting Officer.

1.8.3.3 Soundness Test

Soundness tests shall be made in accordance with ASTM C 88.

1.8.3.4 Los Angeles Abrasion Test

Los Angeles abrasion tests shall be made in accordance with ASTM C 131.

1.8.3.5 Flat or Elongated Particles Tests

Flat and/or elongated particles tests shall be made in accordance with ASTM D 4791.

1.8.3.6 Fractured Faces Tests

When aggregates are supplied from crushed gravel, approved test methods shall be used to assure the aggregate meets the requirements for fractured faces in paragraph AGGREGATES.

1.8.4 Testing Frequency

1.8.4.1 Aggregate Layer

Sieve analyses, field density, and moisture content tests shall be performed at a rate of at least one test for every 800 square meters of completed area and not less than one test for each day's production. Soundness tests, Los Angeles abrasion tests, fractured faces tests and flat and/or elongated particles tests shall be performed at the rate of one test for every 10 sieve analysis tests.

1.8.5 Approval of Materials

1.8.5.1 Aggregate

The aggregate source shall be selected at least 60 days prior to field use in the test section. Tentative approval of the source will be based on certified test results to verify that materials proposed for use meet the contract requirements. Final approval of both the source and the material will be based on test section performance and tests for gradation, soundness, Los Angeles abrasion, flat and/or elongated particles tests and fractured faces tests. For aggregate drainage layer materials, these tests shall be performed on samples taken from the completed and compacted drainage layer course within the test section.

PART 2 PRODUCTS

2.1 NOT USED

2.2 AGGREGATES

Aggregates shall consist of clean, sound, hard, durable, angular particles of crushed stone, crushed slag, or crushed gravel which meet the specification requirements. Slag shall be an air-cooled, blast-furnace product having a dry weight of not less than 1040 kg per cubic meter (65 pcf) determined by ASTM C 29/C 29M. The aggregates shall be free of silt and clay as defined by ASTM D 2487, vegetable matter, and other objectionable materials or coatings.

2.2.1 Aggregate Quality

The aggregate shall have a soundness loss not greater than 18 percent weighted averaged at 5 cycles when tested in magnesium sulfate in accordance with ASTM C 88. The aggregate shall have a percentage of loss on abrasion not to exceed 40 after 500 revolutions as determined by ASTM C 131. The percentage of flat and/or elongated particles shall be determined by ASTM D 4791 with the following modifications. The aggregates shall be separated into 2 size fractions. Particles greater than 12.5 mm sieve and particles passing the 12.5 mm sieve and retained on the 4.75 mm sieve.

The percentage of flat and/or elongated particles in either fraction shall not exceed 20. A flat particle is one having a ratio of width to thickness greater than 3; an elongated particle is one having a ratio of length to width greater than 3. When the aggregate is supplied from more than one source, aggregate from each source shall meet the specified requirements. When the aggregate is supplied from crushed gravel it shall be manufactured from gravel particles, 90 percent of which by weight are retained on the maximum-size sieve listed in TABLE I. In the portion retained on each sieve specified, the crushed gravel shall contain at least 90 percent by weight of crushed pieces having two or more freshly fractured faces with the area of each face being at least equal to 75 percent of the smallest midsectional area of the face. When two fractures are contiguous, the angle between planes of the fractures must be at least 30 degrees in order to count as 2 fractured faces.

2.2.2 Gradation Requirements

Drainage layer aggregates shall be well graded within the limits specified in TABLE I.

TABLE I. GRADATION OF DRAINAGE LAYER MATERIAL

Percentage by Weight Passing Square-Mesh Sieve

Sieve Designation	Rapid Draining Material (RDM)
37.50 mm	100
25.00 mm	70-100
19.00 mm	55-100
12.50 mm	40-80
9.50 mm	30-65
4.75 mm	10-50
2.36 mm	0-25
1.18 mm	0-5

NOTE 1: Particles having diameters less than 0.02 mm shall not be in excess of 1.5 percent by weight of the total sample tested.

NOTE 2: The values are based on aggregates of uniform specific gravity, and the percentages passing the various sieves may require appropriate correction by the Contracting Officer when aggregates of varying specific gravities are used.

NOTE 3: For RDM, the coefficient of uniformity (CU) shall be greater than 3.5. (CU = D60/D10).

PART 3 EXECUTION

3.1 STOCKPILING AGGREGATES

Aggregates shall be stockpiled at locations designated by the Contracting Officer. Stockpile areas shall be cleared and leveled prior to stockpiling aggregates. Aggregates shall be stockpiled to prevent segregation and contamination. Aggregates obtained from different sources shall be stockpiled separately.

3.2 TEST SECTION

3.2.1 Data

A test section shall be constructed to evaluate the ability to carry traffic and the constructability of the drainage layer including required mixing, placement, and compaction procedures. Test section data will be used by the Contracting Officer to determine the required number of passes and the field dry density requirements for full scale production.

3.2.2 Scheduling

The test section shall be constructed a minimum of 30 days prior to the start of full scale production to provide sufficient time for an evaluation of the proposed materials, equipment and procedures including Government QA testing.

3.2.3 Location and Size

The test section shall be placed outside the production paving limits in an area with similar subgrade and subbase conditions approved by the Contracting Officer. The underlying courses and subgrade preparation, required for the pavement section, shall be completed, inspected and approved in the test section prior to constructing the drainage layer. The test section shall be a minimum of 38 m long and one full paving lane wide.

3.2.4 Initial Testing

Certified test results, to verify that the materials proposed for use in the test section meet the contract requirements, shall be provided by the Contractor and approved by the Contracting Officer prior to the start of the test section.

3.2.5 Mixing, Placement, and Compaction

Mixing, placement, and compaction shall be accomplished using equipment meeting the requirements of paragraph EQUIPMENT. Compaction equipment speed shall be no greater than 2.4 km/hour.

3.2.6 Procedure

3.2.6.1 Aggregate Drainage Layer Tests

The test section shall be constructed with aggregate in a moist state so as to establish a correlation between number of roller passes and dry density achievable during field production. Density and moisture content tests shall be conducted at the surface and at intervals of 50 mm of depth down for the total layer thickness, in accordance with ASTM D 2922 and ASTM D 3017. Sieve analysis tests shall be conducted on composite samples, taken adjacent to the density test locations, which represent the total layer thickness. One set of tests (i.e. density, moisture, and sieve analysis) shall be taken before compaction and after each subsequent compaction pass at three separate locations as directed by the Contracting Officer. Compaction passes and density readings shall continue until the difference between the average dry densities of any two consecutive passes is less than or equal to 8 kg per cubic meter (0.5 pcf).. The test section shall be completed by making one final pass with the roller in the static mode and observing any change in the drainage layer surface texture.

3.2.7 Evaluation

Within 10 days of completion of the test section, the Contractor shall submit to the Contracting Officer a Test Section Construction Report complete with all required test data and correlations. The Contracting Officer will evaluate the data and provide to the Contractor the required number of passes of the roller, the dry density for field density control during construction, the depth at which to check the density, and the need for a final static pass of the roller.

3.3 PREPARATION OF UNDERLYING COURSE

Prior to constructing the drainage layer, the underlying course shall be cleaned of all foreign materials. During construction, the underlying course shall contain no frozen material. The underlying course shall conform to Section 02225 EARTHWORK FOR ROADWAYS, RAILROADS, AND AIRFIELDS. Ruts or soft yielding spots in the underlying courses having inadequate compaction and deviations of the surface from the requirements set forth herein shall be corrected by loosening and removing soft or unsatisfactory material and by adding approved material, reshaping to line, and grade, and recompacting to specified density. The finished underlying course shall not be disturbed by traffic or other operations and shall be maintained by the Contractor in a satisfactory condition until the drainage layer is placed.

3.4 TRANSPORTING MATERIAL

3.4.1 Aggregate Drainage Layer Material

Aggregate drainage layer material shall be transported to the site in a manner which prevents segregation and contamination of materials.

3.5 PLACING

3.5.1 General Requisites

Drainage layer material shall be placed on the underlying course in lifts of uniform thickness using equipment meeting the requirements of paragraph EQUIPMENT. When a compacted layer 150 mm or less in thickness is required, the material shall be placed in a single lift. When a compacted layer in excess of 150 mm is required, the material shall be placed in lifts of equal thickness. No lift shall exceed 150 mm or be less than 75 mm when compacted. The lifts when compacted after placement shall be true to the grades or levels required with the least possible surface disturbance. Where the drainage layer is placed in more than one lift, the previously constructed lift shall be cleaned of loose and foreign material. Such adjustments in placing procedures or equipment shall be made to obtain true grades and minimize segregation and degradation of the drainage layer material.

3.5.2 NOT USED

3.5.3 NOT USED

3.5.4 Hand Spreading

In areas where machine spreading is impractical, drainage layer material shall be spread by hand. The material shall be spread uniformly in a loose layer to prevent segregation. The material shall conform to the required grade and thickness after compaction.

3.6 COMPACTION REQUIREMENTS

Compaction shall be accomplished using rollers meeting the requirements of paragraph EQUIPMENT and operating at a rolling speed of no greater than 2.4 km per hour. Each lift of drainage material, including shoulders when specified under the shoulders, shall be compacted with the number of passes of the roller as specified by the Contracting Officer. In addition, a minimum field dry density, as specified by the Contracting Officer, shall be maintained. If the required field dry density is not obtained, the number of roller passes shall be adjusted in accordance with paragraph DEFICIENCIES. Excessive rolling resulting in crushing of aggregate particles shall be avoided. In all places not accessible to the rollers, the drainage layer material shall be compacted with mechanical hand operated tampers.

3.7 NOT USED

3.8 FINISHING

The top surface of the drainage layer shall be finished after final compaction as determined from the test section. Adjustments in rolling and finishing procedures shall be made to obtain grades and minimize segregation and degradation of the drainage layer material.

3.9 EDGES OF DRAINAGE LAYER

Shoulder material shall be placed along the edges of the drainage layer course in a quantity that will compact to the thickness of the layer being constructed. When the drainage layer is being constructed in 2 or more lifts, at least a 300 mm width of the shoulder shall be rolled and compacted simultaneously with the rolling and compacting of each lift of the drainage layer.

3.10 SMOOTHNESS TEST

The surface of the top lift shall not deviate more than 10 mm (3/8 inch) when tested with a 3 m straightedge applied parallel with and at right angles to the centerline of the area to be paved. Deviations exceeding 10 mm shall be corrected in accordance with paragraph DEFICIENCIES.

3.11 THICKNESS CONTROL

The completed thickness of the drainage layer shall be within 13 mm of the thickness indicated. Thickness shall be measured at intervals providing at least one measurement for each 500 square meters of drainage layer. Measurements shall be made in test holes at least 75 mm in diameter. Where the measured thickness is more than 13 mm deficient, such areas shall be corrected in accordance with paragraph DEFICIENCIES. Where the measured thickness is 13 mm more than indicated, it will be considered as conforming to the requirements plus 13 mm, provided the surface of the drainage layer is within 13 mm of established grade. The average job thickness shall be the average of all job measurements as specified above but within 8 mm of the thickness shown on the drawings.

3.12 DEFICIENCIES

3.12.1 Grade and Thickness

Deficiencies in grade and thickness shall be corrected so that both grade

and thickness tolerances are met. Thin layers of material shall not be added to the top surface of the drainage layer to meet grade or increase thickness. If the elevation of the top of the drainage layer is more than 13 mm above the plan grade it shall be trimmed to grade and finished in accordance with paragraph FINISHING. If the elevation of the top surface of the drainage layer is 13 mm or more below the required grade, the surface of the drainage layer shall be scarified to a depth of at least 75 mm, new material shall be added, and the layer shall be blended and recompacted to bring it to grade. Where the measured thickness of the drainage layer is more than 13 mm deficient, such areas shall be corrected by excavating to the required depth and replaced with new material to obtain a compacted lift thickness of at least 75 mm. The depth of required excavation shall be controlled to keep the final surface elevation within grade requirements and to preserve layer thicknesses of materials below the drainage layer.

3.12.2 Density

Density shall be considered deficient if the field dry density test results are below the dry density specified by the Contracting Officer. If the densities are deficient, the layer shall be rolled with 2 additional passes of the specified roller. If the dry density is still deficient, work will be stopped until the cause of the low dry densities can be determined by the Contracting Officer.

3.12.3 Smoothness

Deficiencies in smoothness shall be corrected as if they are deficiencies in grade or thickness. All tolerances for grade and thickness shall be maintained while correcting smoothness deficiencies.

-- End of Section --

SECTION 02720

STORM-DRAINAGE SYSTEM

PART 1 GENERAL

1.1 REFERENCES

The publications listed below form a part of this specification to the extent referenced. The publications are referred to in the text by basic designation only.

AMERICAN ASSOCIATION OF STATE HIGHWAY AND TRANSPORTATION OFFICIALS (AASHTO)

AASHTO HB-16	(1996) Standard Specifications for Highway Bridges
AASHTO M 190	(1988) Bituminous Coated Corrugated Metal Culvert Pipe and Pipe Arches
AASHTO M 198	(1994) Joints for Circular Concrete Sewer and Culvert Pipe Using Flexible Watertight Gaskets
AASHTO M 243	(1994) Field Applied Coating of Corrugated Metal Structural Plate for Pipe, Pipe-Arches, and Arches
AASHTO M 304	(1994) Poly(Vinyl Chloride) (PVC) Profile Wall Drain Pipe and Fittings Based on Controlled Inside Diameter

.

AMERICAN SOCIETY FOR TESTING AND MATERIALS (ASTM)

ASTM A 48	(1994a) Gray Iron Castings
ASTM A 536	(1984; R 1993) Ductile Iron Castings
ASTM A 716	(1995) Ductile Iron Culvert Pipe
ASTM A 742	(1993) Steel Sheet, Metallic Coated and Polymer Precoated for Corrugated Steel Pipe
ASTM A 760	(1995a) Corrugated Steel Pipe, Metallic-Coated for Sewers and Drains
ASTM A 762	(1995) Corrugated Steel Pipe, Polymer Precoated for Sewers and Drains
ASTM A 798	(1994) Installing Factory-Made Corrugated Steel Pipe for Sewers and Other Applications
ASTM B 26	(1996) Aluminum-Alloy Sand Castings
ASTM B 745	(1995) Corrugated Aluminum Pipe for Sewers

	and Drains
ASTM C 76	(1995) Reinforced Concrete Culvert, Storm Drain, and Sewer Pipe
ASTM C 139	(1995) Concrete Masonry Units for Construction of Catch Basins and Manholes
ASTM C 231	(1991b) Air Content of Freshly Mixed Concrete by the Pressure Method
ASTM C 270	(1996a) Mortar for Unit Masonry
ASTM C 425	(1995) Compression Joints for Vitrified Clay Pipe and Fittings
ASTM C 443	(1994) Joints for Circular Concrete Sewer and Culvert Pipe, Using Rubber Gaskets
ASTM C 478	(1994) Precast Reinforced Concrete Manhole Sections
ASTM C 789	(1994) Precast Reinforced Concrete Box Sections for Culverts, Storm Drains, and Sewers
ASTM C 850	(1994) Precast Reinforced Concrete Box Sections for Culverts, Storm Drains, and Sewers with Less Than 2 Ft. of Cover Subjected to Highway Loadings
ASTM C 877	(1994) External Sealing Bands for Noncircular Concrete Sewer, Storm Drain, and Culvert Pipe
ASTM D 1056	(1991) Flexible Cellular Materials - Sponge or Expanded Rubber
ASTM D 1171	(1994) Rubber Deterioration - Surface Ozone Cracking Outdoors or Chamber (Triangular Specimens)
ASTM D 1557	(1991) Laboratory Compaction Characteristics of Soil Using Modified Effort (56,000 ft-lbf/cu. ft. (2,700 kN-m/cu.m.))
ASTM D 1751	(1983; R 1991) Preformed Expansion Joint Filler for Concrete Paving and Structural Construction (Nonextruding and Resilient Bituminous Types)
ASTM D 1752	(1984; R 1992) Preformed Sponge Rubber and Cork Expansion Joint Fillers for Concrete Paving and Structural Construction
ASTM D 1784	(1992) Rigid Poly(Vinyl Chloride) (PVC) Compounds and Chlorinated Poly(Vinyl Chloride) (CPVC) Compounds

ASTM D 2167	(1994) Density and Unit Weight of Soil in Place by the Rubber Balloon Method
ASTM D 2321	(1989; R 1995) Underground Installation of Thermoplastic Pipe for Sewers and Other Gravity-Flow Applications
ASTM D 2922	(1991) Density of Soil and Soil-Aggregate in Place by Nuclear Methods (Shallow Depth)
ASTM D 3017	(1988; R 1993) Water Content of Soil and Rock in Place by Nuclear Methods (Shallow Depth)
ASTM D 3034	(1994) Type PSM Poly(Vinyl Chloride) (PVC) Sewer Pipe and Fittings
ASTM D 3212	(1992) Joints for Drain and Sewer Plastic Pipes Using Flexible Elastomeric Seals
ASTM F 679	(1995) Poly(Vinyl Chloride) (PVC) Large-Diameter Plastic Gravity Sewer Pipe and Fittings
ASTM F 794	(1995a) Poly(Vinyl Chloride) (PVC) Profile Gravity Sewer Pipe and Fittings Based on Controlled Inside Diameter
ASTM F 949	(1994) Poly(Vinyl Chloride) (PVC) Corrugated Sewer Pipe with a Smooth Interior and Fittings

1.2 NOT USED

1.3 SUBMITTALS

Government approval is required for submittals with a "GA" designation; submittals having an "FIO" designation are for information only. The following shall be submitted in accordance with Section 01330 SUBMITTAL PROCEDURES:

SD-06 Instructions

Placing Pipe; FIO.

Printed copies of the manufacturer's recommendations for installation procedures of the material being placed, prior to installation.

SD-13 Certificates

Pipeline Testing; GA. Hydrostatic Test on Watertight Joints; GA. Determination of Density; GA. Frame and Cover for Gratings; GA.

Certified copies of test reports demonstrating conformance to applicable pipe specifications, before pipe is installed. Certification on the ability of frame and cover or gratings to carry the imposed live load.

SD-14 Samples

Pipe for Culverts and Storm Drains; FIO.

Samples of the following materials, before work is started: FIO.

1.4 DELIVERY, STORAGE, AND HANDLING

1.4.1 Delivery and Storage

Materials delivered to site shall be inspected for damage, unloaded, and stored with a minimum of handling. Materials shall not be stored directly on the ground. The inside of pipes and fittings shall be kept free of dirt and debris. Gasket materials and plastic materials shall be protected from exposure to the direct sunlight over extended periods.

1.4.2 Handling

Materials shall be handled in such a manner as to ensure delivery to the trench in sound, undamaged condition. Pipe shall be carried to the trench, not dragged.

PART 2 PRODUCTS

2.1 PIPE FOR CULVERTS AND STORM DRAINS

Pipe for culverts and storm drains shall be of the sizes indicated and shall conform to the requirements specified.

2.1.1 Concrete Pipe

ASTM C 76, Class V.

2.1.2 NOT USED

2.1.3 Corrugated Steel Pipe

2.1.3.1 NOT USED

2.1.3.2 NOT USED

2.1.3.3 NOT USED

2.1.3.4 Fully Bituminous Coated, Fully Paved

AASHTO M 190 Type D and ASTM A 760 zinc coated or aluminum coated Type I, corrugated steel pipe with annular or helical corrugations.

2.1.3.5 NOT USED

2.1.3.6 NOT USED

2.1.3.7 NOT USED

2.1.3.8 Precoated, Fully Paved

ASTM A 762 Type I corrugated steel pipe and AASHTO M 190 Type D (modified), fully paved only, fabricated from ASTM A 742 Grade 10/10 precoated sheet and annular or helical corrugations.

2.1.4 Corrugated Aluminum Alloy Pipe

2.1.4.1 NOT USED

2.1.4.2 Fully Bituminous Coated, Part Paved

AASHTO M 190 Type C and ASTM B 745 corrugated aluminum alloy pipe of either:

a. Type I pipe with annular or helical corrugations.

2.1.5 NOT USED

2.1.6 NOT USED

2.1.7 Ductile Iron Culvert Pipe

ASTM A 716.

2.1.8 PVC Pipe

The pipe manufacturer's resin certification, indicating the cell classification of PVC used to manufacture the pipe in accordance with AASHTO M 304, shall be submitted prior to installation of the pipe.

2.1.8.1 Type PSM PVC Pipe

ASTM D 3034, Type PSM, maximum SDR 35, produced from PVC certified by the compounder as meeting the requirements of ASTM D 1784, minimum cell class 12454-B.

2.1.8.2 Profile PVC Pipe

ASTM F 794, Series 46, produced from PVC certified by the compounder as meeting the requirements of ASTM D 1784, minimum cell class 12454-B.

2.1.8.3 Smooth Wall PVC Pipe

ASTM F 679 produced from PVC certified by the compounder as meeting the requirements of ASTM D 1784, minimum cell class 12454-B.

2.1.8.4 Corrugated PVC Pipe

ASTM F 949 produced from PVC certified by the compounder as meeting the requirements of ASTM D 1784, minimum cell class 12454-B.

2.2 DRAINAGE STRUCTURES

2.2.1 NOT USED

2.2.2 Precast Reinforced Concrete Box

For highway loadings with 600 mm of cover or more or subjected to dead load only, ASTM C 789; for less than 600 mm of cover subjected to highway loading, ASTM C 850.

2.3 MISCELLANEOUS MATERIALS

2.3.1 Concrete

Unless otherwise specified, concrete and reinforced concrete shall conform to the requirements for 24 MPa concrete under Section 03300 CAST-IN-PLACE STRUCTURAL CONCRETE. The concrete mixture shall have air content by volume of concrete, based on measurements made immediately after discharge from the mixer, of 5 to 7 percent when maximum size of coarse aggregate exceeds 37.5 mm. Air content shall be determined in accordance with ASTM C 231. The concrete covering over steel reinforcing shall not be less than 25 mm thick for covers and not less than 40 mm thick for walls and flooring. Concrete covering deposited directly against the ground shall have a thickness of at least 75 mm between steel and ground. Expansion-joint filler material shall conform to ASTM D 1751, or ASTM D 1752, or shall be resin-impregnated fiberboard conforming to the physical requirements of ASTM D 1752.

2.3.2 Mortar

Mortar for pipe joints, connections to other drainage structures, and brick or block construction shall conform to ASTM C 270, Type M, except the maximum placement time shall be 1 hour. The quantity of water in the mixture shall be sufficient to produce a stiff workable mortar but in no case shall exceed 21 liters (gallons) of water per sack of cement. Water shall be clean and free of harmful acids, alkalies, and organic impurities. The mortar shall be used within 30 minutes after the ingredients are mixed with water. The inside of the joint shall be wiped clean and finished smooth. The mortar head on the outside shall be protected from air and sun with a proper covering until satisfactorily cured.

2.3.3 Precast Concrete Segmental Blocks

Precast concrete segmental block shall conform to ASTM C 139, not more than 200 mm (8 inches) thick, not less than 200 mm (8 inches) long, and of such shape that joints can be sealed effectively and bonded with cement mortar.

2.3.4 NOT USED

2.3.5 Precast Reinforced Concrete Manholes

Precast reinforced concrete manholes shall conform to ASTM C 478. Joints between precast concrete risers and tops shall be made with flexible watertight, rubber-type gaskets meeting the requirements of paragraph JOINTS.

2.3.6 NOT USED

2.3.7 Frame and Cover for Gratings

Frame and cover for gratings shall be cast gray iron, ASTM A 48, Class 35B; cast ductile iron, ASTM A 536, Grade 65-45-12; or cast aluminum, ASTM B 26, Alloy 356.OT6. Weight, shape, size, and waterway openings for grates and curb inlets shall be as indicated on the plans.

2.3.8 Joints

2.3.8.1 Flexible Watertight Joints

a. Materials: Flexible watertight joints shall be made with plastic or rubber-type gaskets for concrete pipe and with factory-fabricated resilient materials for clay pipe. The design

of joints and the physical requirements for plastic gaskets shall conform to AASHTO M 198, and rubber-type gaskets shall conform to ASTM C 443. Factory-fabricated resilient joint materials shall conform to ASTM C 425. Gaskets shall have not more than one factory-fabricated splice, except that two factory-fabricated splices of the rubber-type gasket are permitted if the nominal diameter of the pipe being gasketed exceeds 1.35 m (54 inches).

b. Test Requirements: Watertight joints shall be tested and shall meet test requirements of paragraph HYDROSTATIC TEST ON WATERTIGHT JOINTS. Rubber gaskets shall comply with the oil resistant gasket requirements of ASTM C 443. Certified copies of test results shall be delivered to the Contracting Officer before gaskets or jointing materials are installed. Alternate types of watertight joint may be furnished if specifically approved.

2.3.8.2 External Sealing Bands

Requirements for external sealing bands shall conform to ASTM C 877.

2.3.8.3 Flexible Watertight, Gasketed Joints

a. Gaskets: When infiltration or exfiltration is a concern for pipe lines, the couplings may be required to have gaskets. The closed-cell expanded rubber gaskets shall be a continuous band approximately 178 mm (7 inches) wide and approximately 9.5 mm (3/8 inch) thick, meeting the requirements of ASTM D 1056, Type 2 A1, and shall have a quality retention rating of not less than 70 percent when tested for weather resistance by ozone chamber exposure, Method B of ASTM D 1171. Rubber O-ring gaskets shall be 20.6 mm (13/16 inch) in diameter for pipe diameters of 914 mm (36 inches) or smaller and 22.2 mm (7/8 inch) in diameter for larger pipe having 12.7 mm (1/2 inch) deep end corrugation. Rubber O-ring gaskets shall be 34.9 mm (1-3/8 inches) in diameter for pipe having 25 mm (1 inch) deep end corrugations. O-rings shall meet the requirements of AASHTO M 198 or ASTM C 443. Flexible plastic gaskets shall conform to requirements of AASHTO M 198, Type B.

b. Connecting Bands: Connecting bands shall be of the type, size and sheet thickness of band, and the size of angles, bolts, rods and lugs as indicated or where not indicated as specified in the applicable standards or specifications for the pipe. Exterior rivet heads in the longitudinal seam under the connecting band shall be countersunk or the rivets shall be omitted and the seam welded. Watertight joints shall be tested and shall meet the test requirements of paragraph HYDROSTATIC TEST ON WATERTIGHT JOINTS.

2.3.8.4 PVC Plastic Pipes

Joints shall be solvent cement or elastomeric gasket type in accordance with the specification for the pipe and as recommended by the pipe manufacturer.

2.3.8.5 NOT USED

2.3.8.6 NOT USED

2.3.8.7 NOT USED

2.3.8.8 Ductile Iron Pipe

Couplings and fittings shall be as recommended by the pipe manufacturer.

2.4 NOT USED

2.5 DOWNSPOUT BOOTS

Boots used to connect exterior downspouts to the storm-drainage system shall be of gray cast iron conforming to ASTM A 48, Class 30B or 35B. Shape and size shall be as indicated.

2.6 HYDROSTATIC TEST ON WATERTIGHT JOINTS

2.6.1 Concrete and PVC Pipe

A hydrostatic test shall be made on the watertight joint types as proposed. Only one sample joint of each type needs testing; however, if the sample joint fails because of faulty design or workmanship, an additional sample joint may be tested. During the test period, gaskets or other jointing material shall be protected from extreme temperatures which might adversely affect the performance of such materials. Performance requirements for joints in reinforced and nonreinforced concrete pipe shall conform to AASHTO M 198 or ASTM C 443. Test requirements for joints in PVC plastic pipe shall conform to ASTM D 3212.

2.6.2 Corrugated Steel and Aluminum Pipe

A hydrostatic test shall be made on the watertight joint system or coupling band type proposed. The moment strength required of the joint is expressed as 15 percent of the calculated moment capacity of the pipe on a transverse section remote from the joint by the AASHTO HB-16 (Division II, Section 26). The pipe will be supported for the hydrostatic test so that the joint is located at the point which develops 15 percent of the moment capacity of the pipe based on the allowable span in meters (feet) for the pipe flowing full or 54,233 Newton meters (40,000 foot-pounds), whichever is less. Performance requirements shall be met at an internal hydrostatic pressure of 69 kPa (10 psi) for a 10 minute period for both annular corrugated metal pipe and helical corrugated metal pipe with factory reformed ends.

PART 3 EXECUTION

3.1 EXCAVATION FOR PIPE CULVERTS, STORM DRAINS, AND DRAINAGE STRUCTURES

Excavation of trenches and for appurtenances and backfilling for culverts and storm drains shall be in accordance with the applicable portions of Section 02316 EXCAVATION, TRENCHING, AND BACKFILLING FOR UTILITIES SYSTEMS and Section 02225 EARTHWORK FOR ROADWAYS, RAILROADS, AND AIRFIELDS and the requirements specified below.

3.1.1 Trenching

The width of trenches at any point below the top of the pipe shall be not greater than the outside diameter of the pipe plus 600 mm to permit satisfactory jointing and thorough tamping of the bedding material under and around the pipe. Sheeting and bracing where required shall be placed within the trench width as specified. Care shall be taken not to overexcavate. Where trench widths are exceeded, redesign with a resultant increase in cost of stronger pipe or special installation procedures shall

be necessary. Cost of this redesign and increased cost of pipe or installation shall be borne by the Contractor without additional cost to the Government.

3.1.2 Removal of Rock

Rock in either ledge or boulder formation shall be replaced with suitable materials to provide a compacted earth cushion having a thickness between unremoved rock and the pipe of at least 200 mm or 85 mm for each meter of fill over the top of the pipe, whichever is greater, but not more than three-fourths the nominal diameter of the pipe. Where bell-and-spigot pipe is used, the cushion shall be maintained under the bell as well as under the straight portion of the pipe. Rock excavation shall be as specified and defined in Section 02316 EXCAVATION, TRENCHING, AND BACKFILLING FOR UTILITIES SYSTEMS.

3.1.3 Removal of Unstable Material

Where wet or otherwise unstable soil incapable of properly supporting the pipe, as determined by the Contracting Officer, is unexpectedly encountered in the bottom of a trench, such material shall be removed to the depth required and replaced to the proper grade with select granular material, compacted as provided in paragraph BACKFILLING. When removal of unstable material is due to the fault or neglect of the Contractor in his performance of shoring and sheeting, water removal, or other specified requirements, such removal and replacement shall be performed at no additional cost to the government.

3.2 BEDDING

The bedding surface for the pipe shall provide a firm foundation of uniform density throughout the entire length of the pipe.

3.2.1 Concrete Pipe

When no bedding class is specified or detailed on the drawings, concrete pipe shall be bedded carefully in a soil foundation accurately shaped and rounded to conform to the lowest one-fourth of the outside portion of circular pipe or to the lower curved portion of pipe arch for the entire length of the pipe or pipe arch. When necessary, the bedding shall be tamped. Bell holes and depressions for joints shall be only of such length, depth, and width as required for properly making the particular type of joint.

3.2.2 NOT USED

3.2.3 Corrugated Metal Pipe

Bedding for corrugated metal pipe shall be in accordance with ASTM A 798. It is not required to shape the bedding to the pipe geometry.

3.2.4 Ductile Iron Pipe

Bedding for ductile iron pipe shall be as shown on the drawings.

3.2.5 Plastic Pipe

Bedding for PVC pipe shall meet the requirements of ASTM D 2321. Bedding, haunching, and initial backfill shall be either Class IB or II material.

3.3 PLACING PIPE

Each pipe shall be carefully examined before being laid, and defective or damaged pipe shall not be used. Plastic pipe shall be protected from exposure to the direct sunlight prior to laying as needed to maintain adequate pipe stiffness and meet installation deflection requirements. Pipelines shall be laid to the grades and alignment indicated. Proper facilities shall be provided for lowering sections of pipe into trenches. Lifting lugs in vertically elongated metal pipe shall be placed in the same vertical plane as the major axis of the pipe. Under no circumstances shall pipe be laid in water, and no pipe shall be laid when trench conditions or weather are unsuitable for such work. Diversion of drainage or dewatering of trenches during construction shall be provided as necessary. Deflection of installed plastic pipe shall not exceed 4.5 percent of the nominal inside diameter. After backfilling has been completed, the Government may perform a deflection test on the entire length of installed pipeline using a mandrel or other suitable device. Any pipe showing deflections in excess of 4.5 percent shall be removed and replaced at the Contractor's expense. All pipe in place shall be inspected before backfilling, and those pipes damaged during placement shall be removed and replaced.

3.3.1 Concrete, PVC and Ductile Iron Pipe

Laying shall proceed upgrade with spigot ends of bell-and-spigot pipe and tongue ends of tongue-and-groove pipe pointing in the direction of the flow.

3.3.2 NOT USED

3.3.3 NOT USED

3.3.4 Corrugated Metal Pipe

Laying shall be with the separate sections joined firmly together, with the outside laps of circumferential joints pointing upstream, and with longitudinal laps on the sides. Part paved pipe shall be installed so that the centerline of bituminous pavement in the pipe, indicated by suitable markings on the top at each end of the pipe sections, coincides with the specified alignment of pipe. Fully paved steel pipe shall have a painted or otherwise applied label inside the pipe indicating sheet thickness of pipe. Any unprotected metal in the joints shall be coated with bituminous material specified in AASHTO M 190 or AASHTO M 243. Interior coating shall be protected against damage from insertion or removal of struts or tie wires. Lifting lugs shall be used to facilitate moving pipe without damage to exterior or interior coatings. During installation, pipe or pipe arch shall be handled with care to preclude damage to the bituminous coating or paving. Prior to placing backfill, damaged areas of coupling bands and pipe shall be given a coating of bituminous material, specified in AASHTO M 190 or AASHTO M 243. Pipe on which bituminous coating has been damaged to such an extent that satisfactory field repairs cannot be made shall be removed and replaced. Vertical elongation, where indicated, shall be accomplished by factory elongation. Suitable markings or properly placed lifting lugs shall be provided to ensure placement of factory elongated pipe in a vertical plane.

3.4 JOINTS

3.4.1 Concrete Pipe

3.4.1.1 Cement-Mortar Bell-and-Spigot Joint

The first pipe shall be bedded to the established gradeline, with the bell end placed upstream. The interior surface of the bell shall be carefully cleaned with a wet brush and the lower portion of the bell filled with mortar to such depth as to bring inner surfaces of abutting pipes flush and even. The spigot end of each subsequent pipe shall be cleaned with a wet brush and uniformly matched into a bell so that sections are closely fitted. After each section is laid, the remainder of the joint shall be filled with mortar, and a bead shall be formed around the outside of the joint with sufficient additional mortar. If mortar is not sufficiently stiff to prevent appreciable slump before setting, the outside of the joint shall be wrapped or bandaged with cheesecloth to hold mortar in place.

3.4.1.2 Cement-Mortar Oakum Joint for Bell-and-Spigot Pipe

A closely twisted gasket shall be made of jute or oakum of the diameter required to support the spigot end of the pipe at the proper grade and to make the joint concentric. Joint packing shall be in one piece of sufficient length to pass around the pipe and lap at top. This gasket shall be thoroughly saturated with neat cement grout. The bell of the pipe shall be thoroughly cleaned with a wet brush, and the gasket shall be laid in the bell for the lower third of the circumference and covered with mortar. The spigot of the pipe shall be thoroughly cleaned with a wet brush, inserted in the bell, and carefully driven home. A small amount of mortar shall be inserted in the annular space for the upper two-thirds of the circumference. The gasket then shall be lapped at the top of the pipe and driven home in the annular space with a caulking tool. The remainder of the annular space then shall be filled completely with mortar and beveled at an angle of approximately 45 degrees with the outside of the bell. If mortar is not sufficiently stiff to prevent appreciable slump before setting, the outside of the joint thus made shall be wrapped with cheesecloth. Placing of this type of joint shall be kept at least five joints behind laying operations.

3.4.1.3 Cement-Mortar Diaper Joint for Bell-and-Spigot Pipe

The pipe shall be centered so that the annular space is uniform. The annular space shall be caulked with jute or oakum. Before caulking, the inside of the bell and the outside of the spigot shall be cleaned.

a. Diaper Bands: Diaper bands shall consist of heavy cloth fabric to hold grout in place at joints and shall be cut in such lengths that they will extend one-eighth of the circumference of pipe above the spring line on one side of the pipe and up to the spring line on the other side of the pipe. Longitudinal edges of fabric bands shall be rolled and stitched around two pieces of wire. Width of fabric bands shall be such that after fabric has been securely stitched around both edges on wires, the wires will be uniformly spaced not less than 200 mm apart. Wires shall be cut into lengths to pass around pipe with sufficient extra length for the ends to be twisted at top of pipe to hold the band securely in place; bands shall be accurately centered around lower portion of joint.

b. Grout: Grout shall be poured between band and pipe from only the high side of band, until grout rises to the top of band at the spring line of pipe, or as nearly so as possible, on the opposite side of pipe, to ensure a thorough sealing of joint around the

portion of pipe covered by the band. Silt, slush, water, or polluted mortar grout forced up on the lower side shall be carefully forced out by pouring and removed.

c. Remainder of Joint: The remaining unfilled upper portion of the joint shall then be filled with mortar and a bead formed around the outside of this upper portion of the joint with a sufficient amount of additional mortar. The diaper shall be left in place. Placing of this type of joint shall be kept at least five joints behind actual laying of pipe. No backfilling around joints shall be done until joints have been fully inspected and approved.

3.4.1.4 Cement-Mortar Tongue-and-Groove Joint

The first pipe shall be bedded carefully to the established gradeline with the groove upstream. A shallow excavation shall be made underneath the pipe at the joint and filled with mortar to provide a bed for the pipe. The grooved end of the first pipe shall be carefully cleaned with a wet brush, and a layer of soft mortar applied to the lower half of the groove. The tongue of the second pipe shall be cleaned carefully with a wet brush; while in horizontal position, a layer of soft mortar shall be applied to the upper half of the tongue. The tongue end of the second pipe then shall be inserted in the grooved end of the first pipe until mortar is squeezed out on interior and exterior surfaces. Sufficient mortar shall be used to fill the joint completely and to form a bead on the outside.

3.4.1.5 Cement-Mortar Diaper Joint for Tongue-and-Groove Pipe

The joint shall be of the type described for cement-mortar tongue-and-groove joint in this paragraph, except that the shallow excavation directly beneath the joint shall not be filled with mortar until after a gauze or cheesecloth band dipped in cement mortar has been wrapped around the outside of the joint. The cement-mortar bead at the joint shall be at least 15 mm, thick and the width of the diaper band shall be at least 200 mm. The diaper shall be left in place. Placing of this type of joint shall be kept at least five joints behind the actual laying of the pipe. No backfilling around the joints shall be done until the joints have been fully inspected and approved.

3.4.1.6 Plastic Sealing Compound Joints for Tongue-and-Grooved Pipe

Sealing compounds shall follow the recommendation of the particular manufacturer in regard to special installation requirements. Surfaces to receive lubricants, primers, or adhesives shall be dry and clean. Sealing compounds shall be affixed to the pipe not more than 3 hours prior to installation of the pipe, and shall be protected from the sun, blowing dust, and other deleterious agents at all times. Sealing compounds shall be inspected before installation of the pipe, and any loose or improperly affixed sealing compound shall be removed and replaced. The pipe shall be aligned with the previously installed pipe, and the joint pulled together. If, while making the joint with mastic-type sealant, a slight protrusion of the material is not visible along the entire inner and outer circumference of the joint when the joint is pulled up, the pipe shall be removed and the joint remade. After the joint is made, all inner protrusions will be cut off flush with the inner surface of the pipe. If nonmastic-type sealant material is used, the "Squeeze-Out" requirement above shall be waived.

3.4.1.7 Flexible Watertight Joints

Gaskets and jointing materials shall be as recommended by the particular manufacturer in regard to use of lubricants, cements, adhesives, and other special installation requirements. Surfaces to receive lubricants, cements, or adhesives shall be clean and dry. Gaskets and jointing materials shall be affixed to the pipe not more than 24 hours prior to the installation of the pipe, and shall be protected from the sun, blowing dust, and other deleterious agents at all times. Gaskets and jointing materials shall be inspected before installing the pipe; any loose or improperly affixed gaskets and jointing materials shall be removed and replaced. The pipe shall be aligned with the previously installed pipe, and the joint pushed home. If, while the joint is being made the gasket becomes visibly dislocated the pipe shall be removed and the joint remade.

3.4.1.8 External Sealing Band Joint for Noncircular Pipe

Surfaces to receive sealing bands shall be dry and clean. Bands shall be installed in accordance with manufacturer's recommendations.

3.4.2 Corrugated Metal Pipe

3.4.2.1 Field Joints

Transverse field joints shall be of such design that the successive connection of pipe sections will form a continuous line free of appreciable irregularities in the flow line. In addition, the joints shall meet the general performance requirements described in ASTM A 798. Suitable transverse field joints which satisfy the requirements for one or more of the joint performance categories can be obtained with the following types of connecting bands furnished with suitable band-end fastening devices: corrugated bands, bands with projections, flat bands, and bands of special design that engage factory reformed ends of corrugated pipe. The space between the pipe and connecting bands shall be kept free from dirt and grit so that corrugations fit snugly. The connecting band, while being tightened, shall be tapped with a soft-head mallet of wood, rubber or plastic, to take up slack and ensure a tight joint. The annular space between abutting sections of part paved, and fully paved pipe and pipe arch, in sizes 750 mm (30 inches) or larger, shall be filled with a bituminous material after jointing. Field joints for each type of corrugated metal pipe shall maintain pipe alignment during construction and prevent infiltration of fill material during the life of the installations. The type, size, and sheet thickness of the band and the size of angles or lugs and bolts shall be as indicated or where not indicated, shall be as specified in the applicable standards or specifications for the pipe.

3.4.2.2 Flexible Watertight, Gasketed Joints

Installation shall be as recommended by the gasket manufacturer for use of lubricants and cements and other special installation requirements. The gasket shall be placed over one end of a section of pipe for half the width of the gasket. The other half shall be doubled over the end of the same pipe. When the adjoining section of pipe is in place, the doubled-over half of the gasket shall then be rolled over the adjoining section. Any unevenness in overlap shall be corrected so that the gasket covers the end of pipe sections equally. Connecting bands shall then be centered over adjoining sections of pipe, and rods or bolts placed in position and nuts tightened. Band Tightening: The band shall be tightened evenly, even tension being kept on the rods or bolts, and the gasket shall be closely observed to see that it is seating properly in the corrugations. Watertight joints shall remain uncovered for a period of time designated,

and before being covered, tightness of the nuts shall be measured with a torque wrench. If the nut has tended to loosen its grip on the bolts or rods, the nut shall be retightened with a torque wrench and remain uncovered until a tight, permanent joint is assured.

3.5 DRAINAGE STRUCTURES

3.5.1 Manholes and Inlets

Construction shall be of reinforced concrete, or precast reinforced concrete, complete with frames and covers or gratings and with fixed galvanized steel ladders where indicated.

3.5.2 Headwalls

Construction shall be as indicated.

3.6 NOT USED

3.7 BACKFILLING

3.7.1 Backfilling Pipe in Trenches

After the pipe has been properly bedded, selected material from excavation or borrow, at a moisture content that will facilitate compaction, shall be placed along both sides of pipe in layers not exceeding 150 mm in compacted depth. The backfill shall be brought up evenly on both sides of pipe for the full length of pipe. Care shall be taken to ensure thorough compaction of the fill under the haunches of the pipe. Each layer shall be thoroughly compacted with mechanical tampers or rammers. This method of filling and compacting shall continue until the fill has reached an elevation of at least 300 mm above the top of the pipe. The remainder of the trench shall be backfilled and compacted by spreading and rolling or compacted by mechanical rammers or tampers in layers not exceeding 200 millimeters. Tests for density will be made as necessary to ensure conformance to the compaction requirements specified elsewhere in this paragraph. Where it is necessary in the opinion of the Contracting Officer, any sheeting or portions of bracing used shall be left in place and the contract will be adjusted accordingly. Untreated sheeting shall not be left in place beneath structures or pavements.

3.7.2 Backfilling Pipe in Fill Sections

For pipe placed in fill sections, backfill material and the placement and compaction procedures shall be as specified elsewhere in this paragraph. The fill material shall be uniformly spread in layers longitudinally on both sides of the pipe, not exceeding 150 mm in compacted depth, and shall be compacted by rolling parallel with pipe or by mechanical tamping or ramming. Prior to commencing normal filling operations, the crown width of the fill at a height of 300 mm above the top of the pipe shall extend a distance of not less than twice the outside pipe diameter on each side of the pipe or 4 m, whichever is less. After the backfill has reached at least 300 mm above the top of the pipe, the remainder of the fill shall be placed and thoroughly compacted in layers not exceeding 200 mm.

3.7.3 Movement of Construction Machinery

In compacting by rolling or operating heavy equipment parallel with the pipe, displacement of or injury to the pipe shall be avoided. Movement of

construction machinery over a culvert or storm drain at any stage of construction shall be at the Contractor's risk. Any damaged pipe shall be repaired or replaced.

3.7.4 Compaction

3.7.4.1 General

Cohesionless materials include gravels, gravel-sand mixtures, sands, and gravelly sands. Cohesive materials include clayey and silty gravels, gravel-silt mixtures, clayey and silty sands, sand-clay mixtures, clays, silts, and very fine sands. When results of compaction tests for moisture-density relations are recorded on graphs, cohesionless soils will show straight lines or reverse-shaped moisture-density curves, and cohesive soils will show normal moisture-density curves.

3.7.4.2 Minimum Density

Backfill over and around the pipe and backfill around and adjacent to drainage structures shall be compacted at the approved moisture content to the following applicable minimum density (densities) which will be determined as specified in this paragraph.

a. Under airfield and heliport pavements, paved roads, streets, parking areas, and similar-use pavements including adjacent shoulder areas, the density shall be not less than 90 percent of maximum density for cohesive material and 95 percent of maximum density for cohesionless material, up to the elevation where requirements for pavement subgrade materials and compaction shall control.

b. Under unpaved or turfed traffic areas, density shall not be less than 90 percent of maximum density for cohesive material and 95 percent of maximum density for cohesionless material.

c. Under nontraffic areas, density shall be not less than that of the surrounding material.

3.7.5 Determination of Density

Testing shall be the responsibility of the Contractor and performed at no additional cost to the Government. Testing shall be performed by an approved commercial testing laboratory or by the Contractor subject to approval. Tests shall be performed in sufficient number to ensure that specified density is being obtained. Laboratory tests for moisture-density relations shall be made in accordance with ASTM D 1557 except that mechanical tampers may be used provided the results are correlated with those obtained with the specified hand tamper. Field density tests shall be determined in accordance with ASTM D 2167 or ASTM D 2922. When ASTM D 2922 is used, the calibration curves shall be checked and adjusted, if necessary, using the sand cone method as described in paragraph Calibration of the referenced publications. ASTM D 2922 results in a wet unit weight of soil and when using this method ASTM D 3017 shall be used to determine the moisture content of the soil. The calibration curves furnished with the moisture gauges shall be checked along with density calibration checks as described in ASTM D 3017 or ASTM D 2922. Test results shall be furnished the Contracting Officer. The calibration checks of both the density and moisture gauges shall be made at the beginning of a job on each different type of material encountered and at intervals as directed.

3.8 PIPELINE TESTING

Lines shall be tested for leakage by exfiltration tests. Prior to testing for leakage the trench shall be backfilled up to at least the lower half of the pipe. If required, sufficient additional backfill shall be placed to prevent pipe movement during testing, leaving the joints uncovered to permit inspection. Visible leaks encountered shall be corrected regardless of leakage test results. When the water table is 600 mm or more above the top of the pipe at the upper end of the pipeline section to be tested, infiltration shall be measured using a suitable weir or other device acceptable to the Contracting Officer. An exfiltration test shall be made by filling the line to be tested with water so that a head of at least 600 mm is provided above both the water table and the top of the pipe at the upper end of the pipeline to be tested. The filled line shall be allowed to stand until the pipe has reached its maximum absorption, but not less than 4 hours. After absorption, the head shall be reestablished. The amount of water required to maintain this water level during a 2-hour test period shall be measured. Leakage as measured by the exfiltration test shall not exceed 0.98 liters per mm in diameter per kilometers (0.2 gallons per inch in diameter per 100 feet) of pipeline per hour. When leakage exceeds the maximum amount specified, satisfactory correction shall be made and retesting accomplished. Testing, correcting, and retesting shall be made at no additional cost to the Government.

-- End of Section --

SECTION 02730

SANITARY SEWERS

PART 1 GENERAL

1.1 REFERENCES

The publications listed below form a part of this specification to the extent referenced. The publications are referred to in the text by basic designation only.

AMERICAN SOCIETY FOR TESTING AND MATERIALS (ASTM)

ASTM A 74	(1994) Cast Iron Soil Pipe and Fittings
ASTM C 14	(1995) Concrete Sewer, Storm Drain, and Culvert Pipe
ASTM C 76	(1995) Reinforced Concrete Culvert, Storm Drain, and Sewer Pipe
ASTM C 94	(1995) Ready-Mixed Concrete
ASTM C 150	(1995) Portland Cement
ASTM C 270	(1995a) Mortar for Unit Masonry
ASTM C 443	(1994) Joints for Circular Concrete Sewer and Culvert Pipe, Using Rubber Gaskets
ASTM C 478	(1994) Precast Reinforced Concrete Manhole Sections
ASTM C 478M	(1994) Precast Reinforced Concrete Manhole Sections (Metric)
ASTM C 564	(1995) Rubber Gaskets for Cast Iron Soil Pipe and Fittings
ASTM C 828	(1990) Low-Pressure Air Test of Vitrified Clay Pipe Lines
ASTM C 924	(1989) Concrete Pipe Sewer Lines by Low-Pressure Air Test Method
ASTM D 1784	(1992) Rigid Poly(Vinyl Chloride) (PVC) Compounds and Chlorinated Poly(Vinyl Chloride) (CPVC) Compounds
ASTM D 2680	(1995)Acrylonitrile-Butadiene-Styrene (ABS) and Poly(Vinyl Chloride) (PVC) Composite Sewer Piping
ASTM D 3034	(1994) Type PSM Poly(Vinyl Chloride) (PVC) Sewer Pipe and Fittings

ASTM D 3212	(1992) Joints for Drain and Sewer Plastic Pipes Using Flexible Elastomeric Seals
ASTM F 402	(1993) Safe Handling of Solvent Cements, Primers, and Cleaners Used for Joining Thermoplastic Pipe and Fittings
ASTM F 794	(1995a) Poly(Vinyl Chloride) (PVC) Profile Gravity Sewer Pipe and Fittings Based on Controlled Inside Diameter
ASTM F 949	(1993a) Poly(Vinyl Chloride) (PVC) Corrugated Sewer Pipe with a Smooth Interior and Fittings

AMERICAN WATER WORKS ASSOCIATION (AWWA)

AWWA C110	(1993) Ductile-Iron and Gray-Iron Fittings, 3 In. Through 48 In. (75 mm through 1200 mm), for Water and Other Liquids
AWWA C111	(1990) Rubber-Gasket Joints for Ductile-Iron Pressure Pipe and Fittings
AWWA C115	(1988) Flanged Ductile-Iron Pipe with Threaded Flanges
AWWA C151	(1991) Ductile-Iron Pipe, Centrifugally Cast, for Water or Other Liquids

NATIONAL FIRE PROTECTION ASSOCIATION (NFPA)

NFPA 49	(1994) Hazardous Chemicals Data
NFPA 325M	(1991) Fire Hazard Properties of Flammable Liquids, Gases, and Volatile Solids
NFPA 704	(1990) Identification of the Fire Hazards of Materials

UNI-BELL PVC PIPE ASSOCIATION (UBPPA)

UBPPA UNI-B-6	(1990) Recommended Practice for the Low-Pressure Air Testing of Installed Sewer Pipe
UBPPA UNI-B-9	(1990; Addenda 1994) Recommended Performance Specification for Polyvinyl Chloride (PVC) Profile Wall Gravity Sewer Pipe and Fittings Based on Controlled Inside Diameter (Nominal Pipe Sizes 4-48 inch)

1.2 GENERAL REQUIREMENTS

The construction required herein shall include appurtenant structures and

building sewers to points of connection with the building drains 1.5 m outside the building to which the sewer system is to be connected. The Contractor shall replace damaged material and redo unacceptable work at no additional cost to the Government. Excavation and backfilling is specified in Section 02316 EXCAVATION, TRENCHING, AND BACKFILLING FOR UTILITIES SYSTEMS. Backfilling shall be accomplished after inspection by the Contracting Officer. Before, during, and after installation, plastic pipe and fittings shall be protected from any environment that would result in damage or deterioration to the material. The Contractor shall have a copy of the manufacturer's instructions available at the construction site at all times and shall follow these instructions unless directed otherwise by the Contracting Officer. Solvents, solvent compounds, lubricants, elastomeric gaskets, and any similar materials required to install the plastic pipe shall be stored in accordance with the manufacturer's recommendation and shall be discarded if the storage period exceeds the recommended shelf life. Solvents in use shall be discarded when the recommended pot life is exceeded.

1.3 NOT USED

1.4 SUBMITTALS

Government approval is required for submittals with a "GA" designation; submittals having an "FIO" designation are for information only. The following shall be submitted in accordance with Section 01330 SUBMITTAL PROCEDURES:

SD-13 Certificates

Portland Cement; FIO.

Certificates of compliance stating the type of cement used in manufacture of concrete pipe, fittings and precast manholes.

PART 2 PRODUCTS

2.1 PIPE

Pipe shall conform to the respective specifications and other requirements specified below.

2.1.1 Concrete Pipe

Concrete pipe 600 mm (24 inches) or less in diameter, unless otherwise shown or specified, shall be nonreinforced and conform to ASTM C 14, Class 2. Pipe less than 900 mm (36 inches) in diameter shall be bell and spigot type.

2.1.2 Plastic Pipe

2.1.2.1 NOT USED

2.1.2.2 PVC Pipe

ASTM D 3034, Type PSM with a maximum SDR of 35, Size 380 mm (15 inch) or less in diameter. ASTM F 949 for corrugated sewer pipes with a smooth interior. UBPPA UNI-B-9 and ASTM F 794, Series 46, for ribbed sewer pipe with smooth interior, size 200 mm (8 inch) through 1200 mm (48 inch) diameters. PVC shall be certified by the compounder as meeting the

requirements of ASTM D 1784, cell Class 12454B. The pipe stiffness shall be greater than or equal to 735/D for cohesionless material pipe trench backfills.

2.1.3 NOT USED

2.1.4 NOT USED

2.1.5 Ductile Iron Pipe

Pipe shall conform to AWWA C151 unless otherwise shown or specified.

2.1.6 Cast Iron Soil Pipe

ASTM A 74, Class SV.

2.2 FITTINGS

Fittings shall be compatible with the pipe supplied and shall have a strength not less than that of the pipe. Fittings shall conform to the respective specifications and other requirements specified below.

2.2.1 Concrete Pipe

ASTM C 14 for pipe 600 mm (24 inches) or less in diameter. ASTM C 76 for pipe greater than 600 mm (24 inches) in diameter.

2.2.2 Plastic Pipe

PVC composite sewer pipe fittings shall conform to ASTM D 2680.

2.2.2.1 NOT USED

2.2.2.2 PVC Pipe

ASTM D 3034 for type PSM pipe. ASTM F 949 for corrugated sewer pipe with a smooth interior. UBPPA UNI-B-9 and ASTM F 794, Series 46, for ribbed sewer pipe with smooth interior.

2.2.3 NOT USED

2.2.4 NOT USED

2.2.5 Ductile Iron Pipe

Mechanical fittings shall conform to AWWA C110, rated for 1.03 MPa (150 psi). Push-on fittings shall conform to AWWA C110and AWWA C111, rated for 10.3 MPa (150 psi).

2.2.6 Cast Iron Soil Pipe

ASTM A 74.

2.3 JOINTS

Joints installation shall comply with the manufacturer's instructions.

2.3.1 Concrete Pipe

Joints and gaskets shall conform to ASTM C 443.

2.3.2 Plastic Pipe

Flexible plastic pipe (PVC pipe) gasketed joints shall conform to ASTM D 3212.

2.3.3 NOT USED

2.3.4 NOT USED

2.3.5 Ductile Iron Pipe

Push-on joints shall conform to AWWA C111. Mechanical joints shall conform to AWWA C111 as modified by AWWA C151. Flanged joints shall conform to AWWA C115.

2.3.6 Cast Iron Soil Pipe

Rubber gaskets for compression joints shall conform to ASTM C 564. Packing material for caulked joints shall be twisted jute or oakum, tarred type, or asphalt-saturated cellulose-fiber. Joints for acid resisting cast iron soil pipe shall be made with acid resistant non-asbestos packing. The packing shall contain no material which would affect adhesion of the joint sealing material to the pipe. Lead shall be suitable for caulking of joints.

2.4 BRANCH CONNECTIONS

Branch connections shall be made by use of regular fittings or solvent cemented saddles as approved. Saddles for PVC composite pipe shall conform to Figure 2 of ASTM D 2680; and saddles for PVC pipe shall conform to Table 4 of ASTM D 3034.

2.5 FRAMES AND COVERS

Frames and covers shall be cast iron, ductile iron or reinforced concrete. Cast iron frames and covers shall be as indicated or shall be of type as suitable for the application, circular, without vent holes. The frames and covers shall have a combined weight of not less than 181.4 kg (400 pounds). Reinforced concrete frames and covers shall be as indicated or shall conform to ASTM C 478 or ASTM C 478M. The word "Sewer" shall be stamped or cast into covers so that it is plainly visible.

2.6 NOT USED

2.7 CEMENT MORTAR

Cement mortar shall conform to ASTM C 270, Type M with Type II cement.

2.7.1 Portland Cement

Portland cement shall conform to ASTM C 150, Type II for concrete used in concrete pipe, concrete pipe fittings, and manholes and type optional with the Contractor for cement used in concrete cradle, concrete encasement, and thrust blocking.

2.7.2 Portland Cement Concrete

Portland cement concrete shall conform to ASTM C 94, compressive strength of 28 MPa at 28 days, except for concrete cradle and encasement or concrete blocks for manholes. Concrete used for cradle and encasement shall have a compressive strength of 17 MPa minimum at 28 days. Concrete in place shall be protected from freezing and moisture loss for 7 days.

PART 3 EXECUTION

3.1 INSTALLATION

3.1.1 Adjacent Facilities

3.1.1.1 Water Lines

Where the location of the sewer is not clearly defined by dimensions on the drawings, the sewer shall not be closer horizontally than 3 m to a water-supply main or service line, except that where the bottom of the water pipe will be at least 300 mm above the top of the sewer pipe, the horizontal spacing may be a minimum of 2 m. Where gravity-flow sewers cross above water lines, the sewer pipe for a distance of 3 m on each side of the crossing shall be fully encased in concrete or shall be acceptable pressure pipe with no joint closer horizontally than 1 m to the crossing. The thickness of the concrete encasement including that at the pipe joints shall be not less than 100 mm.

3.1.1.2 Roads

Water pipe shall be encased in a sleeve of rigid conduit for the lengths shown. Where sleeves are required, the pipe sleeve shall be as specified for storm drains in Section 02720 STORM-DRAINAGE SYSTEM. A minimum clearance of at least 50 mm between the inner wall of the sleeve and the maximum outside diameter of the sleeved pipe and joints shall be provided. Sand bedding shall be provided for the water pipe through the sleeve. Sleeves of ferrous material shall be provided with the corrosion protection as required for the conditions encountered at the site of installation.

3.1.1.3 Structures

Where sewer pipe is to be installed within 1 m of an existing or proposed building or structural foundation such as a retaining wall, control tower footing, water tank footing, or any similar structure, the sewer pipe shall be sleeved as specified above. Care shall be exercised and proper precautions taken during installation of the sewer pipe and sleeve to assure that there will be no damage to such structures and no settlement or movement of foundations or footing.

3.1.2 Pipe Laying

a. Pipe shall be protected during handling against impact shocks and free fall and the pipe interior shall be free of extraneous material.

b. Pipe laying shall proceed upgrade with the spigot ends of bell-and-spigot pipe and tongue ends of tongue-and-groove pipe pointing in the direction of the flow. Each pipe shall be laid accurately to the line and grade shown on the drawings. Pipe shall be laid and centered so that the sewer has a uniform invert. As the work progresses, the interior of the sewer shall be cleared of all superfluous materials.

c. Before making pipe joints all surfaces of the portions of the pipe to be joined shall be clean and dry. Lubricants, primers, and adhesives shall be used as recommended by the pipe manufacturer. The joints shall then be placed, fitted, joined, and adjusted to obtain the degree of water tightness required.

d. Installations of solvent weld joint pipe, using ABS or PVC pipe and fittings shall be in accordance with ASTM F 402. All required precautions shall be taken to assure adequate trench ventilation and protection for workers installing the pipe.

3.1.2.1 Caulked Joints

The packing material shall be well packed into the annular space to prevent the entrance of lead into the pipe. The remainder of the space shall be filled with molten lead that is hot enough to show a rapid change in color when stirred. Scum shall be removed before pouring. The lead shall be caulked to form a tight joint without overstraining the bell and shall have a minimum depth of 25 mm after caulking.

3.1.2.2 Trenches

Trenches shall be kept free of water and as dry as possible during bedding, laying, and jointing and for as long a period as required. When work is not in progress, open ends of pipe and fittings shall be satisfactorily closed so that no trench water or other material will enter the pipe or fittings.

3.1.2.3 Backfill

As soon as possible after the joint is made, sufficient backfill material shall be placed along the pipe to prevent pipe movement off line or grade. Plastic pipe shall be completely covered to prevent damage from ultraviolet light.

3.1.2.4 Width of Trench

If the maximum width of the trench at the top of the pipe, as specified in Section 02316 EXCAVATION, TRENCHING, AND BACKFILLING FOR UTILITIES SYSTEMS, is exceeded for any reason other than by direction, the Contractor shall install at no additional cost to the Government such concrete cradling, pipe encasement, or other bedding required to support the added load of the backfill.

3.1.2.5 Joints

Joints between different pipe materials shall be made as specified, using approved jointing materials.

3.1.2.6 Handling and Storage

Pipe, fittings and joint material shall be handled and stored in accordance with the manufacturer's recommendations. Storage facilities for plastic pipe, fittings, joint materials and solvents shall be classified and marked in accordance with NFPA 704, with classification as indicated in NFPA 49 and NFPA 325M.

3.1.3 Leakage Tests

Lines shall be tested for leakage by low pressure air testing, infiltration tests or exfiltration tests, as appropriate. Low pressure air testing for vitrified clay pipes shall be as prescribed in ASTM C 828. Low pressure air testing for concrete pipes shall be as prescribed in ASTM C 828. Low pressure air testing for PVC pipe shall be as prescribed in UBPPA UNI-B-6. Low pressure air testing procedures for other pipe materials shall use the pressures and testing times prescribed in ASTM C 828 and ASTM C 924, after consultation with the pipe manufacturer. Prior to infiltration or exfiltration tests the trench shall be backfilled up to at least the lower half of the pipe. If required, sufficient additional backfill shall be placed to prevent pipe movement during testing, leaving the joints uncovered to permit inspection. Visible leaks encountered shall be corrected regardless of leakage test results. When the water table is 600 mm or more above the top of the pipe at the upper end of the pipeline section to be tested, infiltration shall be measured using a suitable weir or other device acceptable to the Contracting Officer. When the Contracting Officer determines that infiltration cannot be properly tested, an exfiltration test shall be made by filling the line to be tested with water so that a head of at least 600 mm is provided above both the water table and the top of the pipe at the upper end of the pipeline to be tested. The filled line shall be allowed to stand until the pipe has reached its maximum absorption, but not less than 4 hours. After absorption, the head shall be re-established. The amount of water required to maintain this water level during a 2-hour test period shall be measured. Leakage as measured by either the infiltration test or exfiltration test shall not exceed 50 mL per 5 mm diameter per 100 meters of pipeline per hour. When leakage exceeds the maximum amount specified, satisfactory correction shall be made and retesting accomplished. Testing, correction, and retesting shall be made at no additional cost to the Government.

3.1.4 Test for Deflection

When flexible pipe is used, a deflection test shall be made on the entire length of the installed pipeline not less than 30 days after the completion of all work including the leakage test, backfill, and placement of any fill, grading, paving, concrete, or superimposed loads. Deflection shall be determined by use of a deflection device or by use of a spherical, spheroidal, or elliptical ball, a cylinder, or circular sections fused to a common shaft. The ball, cylinder, or circular sections shall have a diameter, or minor diameter as applicable, of 92.5 percent of the inside diameter of the pipe. A tolerance of plus 0.5 percent will be permitted. The ball, cylinder, or circular sections shall be of a homogeneous material throughout, shall have a density greater than 1.0 as related to water at 4.0 degrees C (39.2 degrees F), and shall have a surface brinell hardness of not less than 150. It shall be center bored and through bolted with a 6.4 mm (1/4 inch) minimum diameter steel shaft having a yield strength of 480 MPa (70,000 psi) or more, with eyes at each end for attaching pulling cables. The eye shall be suitably backed with flange or heavy washer such that a pull exerted on the opposite end of the shaft shall produce compression throughout the remote end of the ball, cylinder or circular section. Circular sections shall be so spaced that the distance from the external faces of the front and back sections shall equal or exceed the diameter of the circular section. Failure of the ball, cylinder, or circular section to pass freely through a pipe run, either by being pulled through or by being flushed through with water, shall be cause for rejection of that run. When a deflection device is used for the test in lieu of the ball, cylinder, or circular sections described, such device shall be approved prior to use. The device shall be sensitive to 1.0

percent of the diameter of the pipe being measured and shall be accurate to 1.0 percent of the indicated dimension. Installed pipe showing deflections greater than 7.5 percent of the normal diameter of the pipe, shall be retested by a run from the opposite direction. If the retest also fails, the suspect pipe shall be replaced at no cost to the Government.

3.2 CONCRETE CRADLE AND ENCASEMENT

The pipe shall be supported on a concrete cradle, or encased in concrete where indicated or directed.

3.3 WYE BRANCHES

Wye branches shall be installed where sewer connections are indicated or where directed. Cutting into piping for connections shall not be done except in special approved cases. When the connecting pipe cannot be adequately supported on undisturbed earth or tamped backfill, the pipe shall be encased in concrete backfill or supported on a concrete cradle as directed. Concrete required because of conditions resulting from faulty construction methods or negligence by the Contractor shall be installed at no additional cost to the Government. The installation of wye branches in an existing sewer shall be made by a method which does not damage the integrity of the existing sewer. One acceptable method consists of removing one pipe section, breaking off the upper half of the bell of the next lower section and half of the running bell of wye section. After placing the new section, it shall be rotated so that the broken half of the bell will be at the bottom. The two joints shall then be made with joint packing and cement mortar.

3.4 NOT USED

3.5 CONNECTIONS TO EXISTING MANHOLES

Pipe connections to existing manholes shall be made in such manner that the finish work will conform as nearly as practicable to the essential applicable requirements specified for new manholes, including all necessary concrete work, cutting, and shaping. The connection shall be centered on the manhole. Holes for the new pipe shall be of sufficient diameter to allow packing cement mortar around the entire periphery of the pipe but no larger than 1-1/2 times the diameter of the pipe. Cutting the manhole shall be done in a manner that will cause the least damage to the walls.

3.6 BUILDING CONNECTIONS

Building connections shall include the lines to and connection with the building waste drainage piping at a point approximately 1.5 m outside the building, unless otherwise indicated. Where building drain piping is not installed, the Contractor shall terminate the building connections approximately 1.5 m from the site of the building at a point and in a manner designated.

3.7 CLEANOUTS AND OTHER APPURTENANCES

Cleanouts and other appurtenances shall be installed where shown on the drawings or as directed by the Contracting Officer, and shall conform to the detail of the drawings.

-- End of Section --

SECTION 02754

CONCRETE PAVEMENTS FOR SMALL PROJECTS

PART 1 GENERAL

1.1 REFERENCES

The publications listed below form a part of this specification to the extent referenced. The publications are referred to in the text by basic designation only.

ACI INTERNATIONAL (ACI)

ACI 211.1	(1991) Standard Practice for Selecting Proportions for Normal, Heavyweight, and Mass Concrete
ACI 301	(1996) Standard Specification for Structural Concrete
ACI 305R	(1991) Hot Weather Concreting

AMERICAN SOCIETY FOR TESTING AND MATERIALS (ASTM)

ASTM A 184	(1996) Fabricated Deformed Steel Bar Mats for Concrete Reinforcement
ASTM A 615	(1996) Deformed and Plain Billet-Steel Bars for Concrete Reinforcement
ASTM A 616	(1996) Rail-Steel Deformed and Plain Bars for Concrete Reinforcement
ASTM A 617	(1996) Axle-Steel Deformed and Plain Bars for Concrete Reinforcement
ASTM C 31	(1996) Making and Curing Concrete Test Specimens in the Field
ASTM C 33	(1993) Concrete Aggregates
ASTM C 39	(1996) Compressive Strength of Cylindrical Concrete Specimens
ASTM C 94	(1996) Ready-Mixed Concrete
ASTM C 123	(1994) Lightweight Pieces in Aggregate
ASTM C 143	(1990a) Slump of Hydraulic Cement Concrete
ASTM C 150	(1996) Portland Cement
ASTM C 192	(1990a) Making and Curing Concrete Test Specimens in the Laboratory

ASTM C 231	(1991b) Air Content of Freshly Mixed Concrete by the Pressure Method
ASTM C 260	(1995) Air-Entraining Admixtures for Concrete
ASTM C 494	(1992) Chemical Admixtures for Concrete
ASTM C 881	(1990) Epoxy-Resin-Base Bonding Systems for Concrete
ASTM C 1077	(1995a) Laboratories Testing Concrete and Concrete Aggregates for Use in Construction and Criteria for Laboratory Evaluation
ASTM D 1751	(1983; R 1991) Preformed Expansion Joint Filler for Concrete Paving and Structural Construction (Nonextruding and Resilient Bituminous Types)
ASTM D 1752	(1984; R 1992) Preformed Sponge Rubber and Cork Expansion Joint Fillers for Concrete Paving and Structural Construction

ARMY CORPS OF ENGINEERS (COE)

COE CRD-C 130	(1989) Scratch Hardness of Coarse Aggregate Particles
COE CRD-C 300	(1990) Specifications for Membrane-Forming Compounds for Curing Concrete
COE CRD-C 540	(1971; R 1981) Standard Specification for Nonbituminous Inserts for Contraction Joints in Portland Cement Concrete Airfield Pavements, Sawable Type
COE CRD-C 572	(1974) Corps of Engineers Specifications for Polyvinylchloride Waterstop

NATIONAL READY-MIXED CONCRETE ASSOCIATION (NRMCA)

NRMCA CPMB 100	(1990) Concrete Plant Standards

1.2 SYSTEM DESCRIPTION

This section is intended to stand alone for construction of concrete (rigid) pavement. However, where the construction covered herein interfaces with other sections, the construction at each interface shall conform to the requirements of both this section and the other section, including tolerances for both.

1.3 NOT USED

1.4 ACCEPTABILITY OF WORK

The pavement will be accepted on the basis of tests made by the Government and by the Contractor or its suppliers, as specified herein. The Government may, at its discretion, make check tests to validate the results

of the Contractor's testing. Concrete samples shall be taken by the Contractor at the placement to determine the slump, air content, and strength of the concrete. Test cylinders shall be made for determining conformance with the strength requirements of these specifications and, when required, for determining the time at which pavements may be placed into service. All air content measurements shall be determined in accordance with ASTM C 231. All slump tests shall be made in accordance with ASTM C 143. All test cylinders shall be 150 by 300 mm cylinders and shall be fabricated in accordance with ASTM C 192, using only steel molds, cured in accordance with ASTM C 31, and tested in accordance with ASTM C 39. A strength test shall be the average of the strengths of two cylinders made from the same sample of concrete and tested at 28 days. The Contractor shall furnish all materials, labor, and facilities required for molding, curing, testing, and protecting test specimens at the site and in the laboratory.

1.4.1 Evaluation Sampling

Sampling, testing, and mixture proportioning shall be performed by a commercial Testing Laboratory, conforming with ASTM C 1077. The individuals who sample and test concrete and concrete constituents shall be certified as American Concrete Institute (ACI) Concrete Field Testing Technicians, Grade I. The individuals who perform the inspection of concrete shall be certified as ACI Concrete Construction Inspector, Level II. All mix design, weekly quality control reports, smoothness reports, and project certification reports shall be signed by a Registered Engineer.

1.4.2 Surface Testing

Surface testing for surface smoothness and plan grade shall be performed as indicated below by the Testing Laboratory. The measurements shall be properly referenced in accordance with paving lane identification and stationing, and a report given to the Government within 24 hours after measurement is made. A final report of surface testing, signed by a Registered Engineer, containing all surface measurements and a description of all actions taken to correct deficiencies, shall be provided to the Government upon conclusion of surface testing.

1.4.2.1 Surface Smoothness Requirements

The finished surfaces of the pavements shall have no abrupt change of 3 mm or more, and all pavements shall be within the tolerances specified in Table 1 when checked with the straightedge.

TABLE 1
STRAIGHTEDGE SURFACE SMOOTHNESS--PAVEMENTS

Pavement Category	Direction of Testing	Tolerances mm
Tank Hardstands, Parking Areas, Open Storage Areas	Longitudinal	6.5
	Transverse	6.5

1.4.2.2 Surface Smoothness Testing Method

The surface of the pavement shall be tested with the straightedge to identify all surface irregularities exceeding the tolerances specified above. The entire area of the pavement shall be tested in both a

longitudinal and a transverse direction on parallel lines approximately 4.5 m apart. The straightedge shall be held in contact with the surface and moved ahead one-half the length of the straightedge for each successive measurement. The amount of surface irregularity shall be determined by placing the straightedge on the pavement surface and allowing it to rest upon the two highest spots covered by its length and measuring the maximum gap between the straightedge and the pavement surface, in the area between these two high points.

1.4.3 Edge Slump Testing and Conformance

When slip-form paving is used, not more than 15 percent of the total free edge of the slipformed portion of the pavement, shall have an edge slump exceeding 6 mm and no slab shall have an edge slump exceeding 9 mm. Edge slump shall be determined as above for surface smoothness, at each free edge of each slipformed paving lane constructed. Measurements shall be made at 1.5 to 4.5 m spacings, and as directed. When edge slump exceeding the limits specified above is encountered on either side of the paving lane, additional straightedge measurements shall be made, if required, to define the linear limits of the excessive slump. The concrete for the entire width of the paving lane within these limits of excessive edge slump shall be removed and replaced. Adding concrete or paste to the edge or otherwise manipulating the plastic concrete after the sliding form has passed, or patching the hardened concrete, shall not be used as a method for correcting excessive edge slump.

1.4.4 Plan Grade Testing and Conformance

The finished surface of the pavements shall conform, within the tolerances shown in Table 1, to the lines, grades, and cross sections shown. The finished surface of new abutting pavements shall coincide at their juncture. The finished surface of airfield runway, taxiway, and apron pavements shall vary not more than 12 mm above or below the plan grade line or elevation indicated. The surfaces of other pavements shall vary not more than 18 mm above or below the plan grade line or elevation indicated. Each pavement category shall be checked by the Contractor for conformance with plan grade requirements by running lines of levels at intervals to determine the elevation at each joint intersection.

1.5 PRECONSTRUCTION TESTING OF MATERIALS

The Contractor shall not be entitled to any additional payment or extension of time because of delays caused by sampling and testing additional sources, or samples, necessitated by failure of any samples. Aggregates shall be sampled and tested by the Test Laboratory and shall be representative of the materials to be used for the project. Test results, signed by a Registered Engineer, shall be submitted 45 days before commencing paving. No aggregate shall be used unless test results show that it meets all requirements of these specifications, including compliance with ASTM C 33 and deleterious materials limitations.

1.6 SUBMITTALS

Government approval is required for submittals with a "GA" designation; submittals having an "FIO" designation are for information only. The following shall be submitted in accordance with Section 01330 SUBMITTAL PROCEDURES:

SD-01 Data

Equipment; FIO.

Manufacturer's literature on the concrete plant; mixing equipment; hauling equipment; placing and finishing, and curing equipment; at least 7 days prior to start of paving.

SD-07 Schedules

Paving; FIO.

Paving Schedules at least 7 days prior to start of paving.

SD-08 Statements

Mixture Proportions; GA.

The report of the Contractor's mixture proportioning studies showing the proportions of all ingredients and supporting information on aggregate and other materials that will be used in the manufacture of concrete, at least 14 days prior to commencing concrete placing operations.

1.7 EQUIPMENT

1.7.1 Batching and Mixing

The batching plant shall conform to NRMCA CPMB 100, the equipment requirements in ASTM C 94, and as specified. Water shall not be weighed or measured cumulatively with another ingredient. All concrete materials batching shall meet ASTM C 94 requirements. Mixers shall be stationary mixers or truck mixers. Batching, mixers, mixing time, permitted reduction of mixing time, and concrete uniformity shall meet the requirements of ASTM C 94, and shall be documented in the initial weekly QC Report.

1.7.2 Transporting Equipment

Transporting equipment shall be in conformance with ASTM C 94 and as specified herein. Concrete shall be transported to the paving site in rear-dump trucks, in truck mixers designed with extra large blading and rear opening specifically for low slump concrete, or in agitators. Bottom-dump trucks shall not be used for delivery of concrete.

1.7.3 Delivery Equipment

When concrete transport equipment cannot operate on the paving lane, side-delivery transport equipment consisting of self-propelled moving conveyors shall be used to deliver concrete from the transport equipment and discharge it in front of the paver. Front-end loaders, dozers, or similar equipment shall not be used to distribute the concrete.

1.7.4 Paver-Finisher

The paver-finisher shall be a heavy-duty, self-propelled machine designed specifically for paving and finishing high quality pavement. The paver-finisher shall spread, consolidate, and shape the plastic concrete to the desired cross section in one pass. The paver-finisher shall be equipped with a full width "knock-down" auger, capable of operating in both directions, which will evenly spread the fresh concrete in front of the screed or extrusion plate. Immersion vibrators shall be gang mounted at

the front of the paver on a frame equipped with suitable controls so that all vibrators can be operated at any desired depth within the slab or completely withdrawn from the concrete. The vibrators shall be automatically controlled so that they will be immediately stopped as forward motion of the paver ceases. The spacing of the immersion vibrators across the paving lane shall be as necessary to properly consolidate the concrete, but the clear distance between vibrators shall not exceed 750 mm, and the outside vibrators shall not exceed 300 mm from the edge of the lane. The paver-finisher shall be equipped with a transversely oscillating screed or an extrusion plate to shape, compact, and smooth the surface.

1.7.4.1 Paver-Finisher with Fixed Forms

The paver-finisher shall be equipped with wheels designed to ride the forms, keep it aligned with the forms, and to spread the preventing deformation of the forms.

1.7.4.2 Slipform Paver-Finisher

The slipform paver-finisher shall be automatically controlled and crawler mounted with padded tracks. Horizontal alignment shall be electronically referenced to a taut wire guideline. Vertical alignment shall be electronically referenced on both sides of the paver to a taut wire guideline, to an approved laser control system, or to a ski operating on a completed lane. Control from a slope-adjustment control or control operating from the underlying material shall not be used.

1.7.4.3 Other Types of Finishing Equipment

Clary screeds or other rotating tube floats will not be allowed on the project.

1.7.5 Curing Equipment

Equipment for curing is specified in paragraph CURING.

1.7.6 Texturing Equipment

Texturing equipment shall be as specified below.

1.7.6.1 Fabric Drag

A fabric drag shall consist of a piece of fabric material as wide as the lane width securely attached to a separate wheel mounted frame spanning the paving lane or to one of the other similar pieces of equipment. The material shall be wide enough to provide 300 to 450 mm dragging flat on the pavement surface.

1.7.6.2 Deep Texturing Equipment

Texturing equipment shall consist of a stiff bristled broom forming a drag at least 1.2 m long. This drag shall be mounted in a wheeled frame spanning the paving lane and constructed to mechanically pull the drag in a straight line across the paving lane perpendicular to the centerline.

1.7.7 Sawing Equipment

Equipment for sawing joints and for other similar sawing of concrete shall be standard diamond-tip-bladed concrete saws mounted on a wheeled chassis.

1.7.8 Straightedge

The Contractor shall furnish and maintain at the job site one 4 m straightedge for testing concrete surface smoothness. The straightedge shall be constructed of aluminum or magnesium alloy and shall have blades of box or box-girder cross section with flat bottom, adequately reinforced to insure rigidity and accuracy. Straightedges shall have handles for operation on the pavement.

PART 2 PRODUCTS

2.1 CEMENTITIOUS MATERIALS

Cementitious materials shall be portland cement and shall conform to appropriate specifications listed below.

2.1.1 Portland Cement

Portland cement shall conform to ASTM C 150 Type II, low-alkali.

2.2 AGGREGATES

Aggregates shall consist of clean, hard, uncoated particles meeting the requirements of ASTM C 33, including deleterious materials, abrasion loss and soundness requirements of ASTM C 33, and other requirements specified herein.

2.2.1 Coarse Aggregate

Coarse aggregate shall consist of crushed gravel, crushed stone, or a combination thereof. The nominal maximum size of the coarse aggregate shall be 27.5 mm. When the nominal maximum size is greater than 25.0 mm, the aggregates shall be furnished in two ASTM C 33 size groups, No. 67 and No. 4. The amount of deleterious material in each size of coarse aggregate shall not exceed the limits shown in ASTM C 33 Class 1N, 4M or 4S, depending on the weathering region, and the following limits:

a. Lightweight particles 1.0 max. percent by mass (ASTM C 123).

b. Other soft particles 2.0 max. percent by mass (COE CRD-C 130).

c. Total of all deleterious 5.0 max. percent by mass (substances listed in ASTM C 33 and above, exclusive of material finer than 0.075 mm sieve).

d. The separation medium for lightweight particles shall have a density of 2.0 Mg/cubic meters.

2.2.2 Fine Aggregate

Fine aggregate shall consist of natural sand, manufactured sand, or a combination of the two, and shall be composed of clean, hard, durable particles. All fine aggregate shall be composed of clean, hard, durable particles meeting the requirements of ASTM C 33 and the requirements herein. The amount of deleterious material in the fine aggregate shall not exceed the limits in ASTM C 33and shall not exceed the following limits:

a. Lightweight particles (ASTM C 123) 1.0 percent max. by mass using a

medium with a density of 2.0 Mg/cubic meter.

b. The total of all deleterious material types, listed in ASTM C 33 and above, shall not exceed 3.0 percent of the mass of the fine aggregate.

2.3 CHEMICAL ADMIXTURES

Air-entraining admixture shall conform to ASTM C 260. An accelerator shall be used only when specified in paragraph SPECIFIED CONCRETE STRENGTH AND OTHER PROPERTIES and shall not be used to reduce the amount of cementitious material used. Accelerator shall conform to ASTM C 494 Type C. Calcium chloride and admixtures containing calcium chloride shall not be used. A water-reducing or retarding admixture shall meet the requirements of ASTM C 494. Type G or H admixtures are not allowed.

2.4 CURING MATERIALS

Membrane forming curing compound shall be a white pigmented compound conforming to COE CRD-C 300. Burlap shall be new or shall be clean material never used for anything other than curing concrete.

2.5 WATER

Water for mixing and curing shall be clean, potable, and free of injurious amounts of oil, acid, salt, or alkali.

2.6 JOINT MATERIALS

2.6.1 Expansion Joint Material

Expansion joint filler shall be a preformed material conforming to ASTM D 1751 or ASTM D 1752.

2.6.2 Slip Joint Material

Slip joint material shall be 6 mm thick expansion joint filler conforming to ASTM D 1751 or ASTM D 1752.

2.6.3 Contraction Joint Inserts

Sawable contraction joint inserts shall conform to COE CRD-C 540. Nonsawable contraction joint inserts shall have sufficient stiffness to permit placement in plastic concrete without deviation from a straight line and shall conform to the physical requirements of COE CRD-C 540, with the exception of resistance to sawing. Material for polyvinyl chloride inserts shall conform to COE CRD-C 572. No metal inserts of any kind shall be used.

2.7 REINFORCING

2.7.1 General

Reinforcing bars shall conform to ASTM A 615 Grade 60. Bar mats shall conform to ASTM A 184. Reinforcement shall be free from loose, flaky rust, loose scale, oil, grease, mud, or other coatings that might reduce the bond with concrete.

2.8 DOWELS AND TIE BARS

2.8.1 Dowels

Dowels shall be single piece, plain (non-deformed) steel bars conforming to ASTM A 615 Grade 60 or higher. Dowels shall be free of loose, flaky rust and loose scale and shall be clean and straight.

2.8.2 Tie Bars

Tie bars shall be deformed steel bars conforming to ASTM A 615, ASTM A 616 or ASTM A 617. Grade 60 or higher shall not be used for bars that are bent and straightened during construction.

2.9 EPOXY RESIN

All epoxy-resin materials shall be two-component materials conforming to ASTM C 881, Class as appropriate for each application temperature to be encountered; except, that in addition, the materials shall meet the following requirements:

a. Material for use for embedding dowels and anchor bolts shall be Type IV, Grade 3.

b. Material for use as patching for complete filling of spalls, wide cracks, and other voids and for use in preparing epoxy resin mortar shall be Type III, Grade as approved.

c. Material for injecting cracks shall be Type IV, Grade 1.

d. Material for bonding freshly mixed portland cement concrete, mortar, or freshly mixed epoxy resin concrete to hardened concrete shall be Type V, Grade as approved.

2.10 SPECIFIED CONCRETE STRENGTH AND OTHER PROPERTIES

Specified compressive strength, f'c, for concrete is 4.48 MPa at 28 days. Maximum allowable water-cementitious material ratio is 0.50. The water-cementitious material ratio is based on absolute volume equivalency, where the ratio is determined using the weight of cement for a cement only mix, or using the total volume of cement plus pozzolan converted to an equivalent weight of cement by the absolute volume equivalency method described in ACI 211.1. The concrete shall be air-entrained with a total air content of 6 plus or minus 1 percent. The maximum allowable slump of the concrete shall be 75 mm for pavement constructed with fixed forms. For slipformed pavement, the maximum allowable slump shall be 30 mm. The strength of the concrete will be considered satisfactory so long as the average of all sets of three consecutive test results equals or exceeds the specified compressive strength f'c and no individual test result falls below the specified strength f'c by more than 3.5 MPa. Additional analysis or testing, including taking cores and/or load tests may be required at the Contractor's expense when the strength of the concrete in the structure is considered potentially deficient.

2.11 MIXTURE PROPORTIONS

2.11.1 Composition Concrete

Composition concrete shall be composed of cementitious material, water, fine and coarse aggregates, and admixtures. Fly ash, if used, shall be used only at a rate between 15 and 35 percent by mass of the total

cementitious material. Admixtures shall consist of air entraining admixture and may also include retarder water-reducing admixture. High range water-reducing admixtures and admixtures to produce flowable concrete shall not be used. No substitutions shall be made in the materials used in the mixture proportions without additional tests to show that the quality of the concrete is satisfactory.

2.11.2 Concrete Mixture Proportioning Studies

Trial design batches, mixture proportioning studies, and testing shall be the responsibility of the Contractor, and shall be performed by the Test Laboratory and signed by a Registered Engineer. No concrete pavement shall be placed until the Contracting Officer has approved the Contractor's mixture proportions. All materials used in mixture proportioning studies shall be representative of those proposed for use on the project. If there is a change in materials, additional mixture design studies shall be made using the new materials. Trial mixtures having proportions, slumps, and air content suitable for the work shall be based on methodology described in ACI 211.1. At least three different water-cementitious ratios, which will produce a range of strength encompassing that required on the project, shall be used. Laboratory trial mixtures shall be proportioned for maximum permitted slump and air content. Maximum sand content shall be 40 percent of the total aggregate SSD weight. Aggregate quantities shall be based on the mass in a saturated surface dry condition.

2.11.3 Mixture Proportioning Procedure

The Contractor shall perform the following:

a. Fabricate, cure and test 6 test cylinders per age for each mixture at 7 and 28 days.

b. Using the average strength for each w/(c+p), plot the results from each of the three mixtures on separate graphs for w/(c+p) versus 28-day strength.

c. From the graphs select a w/(c+p) which will produce a mixture giving a 28-day strength equal to the required strength determined in accordance with the following paragraph.

2.11.4 Average Strength Required for Mixtures

In order to ensure meeting, during production, the strength requirements specified, the mixture proportions selected shall produce a required average strength, f'cr, exceeding the specified strength, f'c, in accordance with procedures in Chapter 3 of ACI 301, "Proportioning."

PART 3 EXECUTION

3.1 CONDITIONING OF UNDERLYING MATERIAL

Underlying material, base course, upon which concrete is to be placed shall be clean, damp, and free from debris, waste concrete or cement, frost, ice, and standing or running water. After the underlying material has been prepared for concrete placement, no equipment shall be permitted thereon.

3.2 WEATHER LIMITATIONS

3.2.1 Hot Weather Paving

The temperature of concrete shall not exceed 32 degrees C. Steel forms, dowels and reinforcing shall be cooled prior to concrete placement when steel temperatures are greater than 49 degrees C.

3.2.2 Cold Weather Paving

The ambient temperature of the air at the placing site and the temperature of surfaces to receive concrete shall be not less 5 degrees C. The temperature of the concrete when placed shall be not less than 10 degrees C. Materials entering the mixer shall be free from ice, snow, or frozen lumps. Salt, chemicals or other materials shall not be incorporated in the concrete to prevent freezing. Calcium chloride shall not be used at any time. Covering and other means shall be provided for maintaining the concrete at a temperature of at least 10 degrees C for not less than 72 hours after placing, and at a temperature above freezing for the remainder of the curing period. Pavement damaged by freezing shall be completely removed and replaced at the Contractor's expense as specified in paragraph, REPAIR, REMOVAL, AND REPLACEMENT OF SLABS.

3.3 CONCRETE PRODUCTION

3.3.1 General Requirements

Concrete shall be deposited in front of the paver within 45 minutes from the time cement has been charged into the mixing drum, except that if the ambient temperature is above 32 degrees C, the time shall be reduced to 30 minutes. Every load of concrete delivered to the paving site shall be accompanied by a batch ticket from the operator of the batching plant. Tickets shall show at least the mass, or volume, of all ingredients in each batch delivered, the water meter and revolution meter reading on truck mixers and the time of day. Tickets shall be delivered to the placing foreman who shall keep them on file and deliver them to the Government daily.

3.3.2 Transporting and Transfer-Spreading Operations

Non-agitating equipment shall be used only on smooth roads and for haul time less than 15 minutes. Equipment shall be allowed to operate on the underlying material only if no damage is done to the underlying material and its degree of compaction. Any disturbance to the underlying material that does occur shall be corrected before the paver-finisher reaches the location of the disturbance and the equipment shall be replaced or procedures changed to prevent any future damage. Additional water may be added to truck mixers to bring the slump within the specified range provided the mixture water-cement ratio is not exceeded.

3.4 PAVING

Pavement shall be constructed with paving and finishing equipment utilizing fixed forms or slipforms.

3.4.1 Consolidation

The paver vibrators shall be inserted into the concrete not closer to the underlying material than 50 mm. The vibrators or any tamping units in front of the paver shall be automatically controlled so that they shall be stopped immediately as forward motion ceases. Excessive vibration shall not be permitted. Concrete in small, odd-shaped slabs or in locations

inaccessible to the paver mounted vibration equipment shall be vibrated with a hand-operated immersion vibrator. Vibrators shall not be used to transport or spread the concrete.

3.4.2 Operation

When the paver is operated between or adjacent to previously constructed pavement (fill-in lanes), provisions shall be made to prevent damage to the previously constructed pavement, including keeping the existing pavement surface free of any debris, and placing rubber mats beneath the paver tracks. Transversely oscillating screeds and extrusion plates shall overlap the existing pavement the minimum possible, but in no case more than 200 mm.

3.4.3 Required Results

The paver-finisher shall be operated to produce a thoroughly consolidated slab throughout, true to line and grade within specified tolerances. The paver-finishing operation shall produce a surface finish free of irregularities, tears, voids of any kind, and any other discontinuities. It shall produce only a very minimum of paste at the surface. Multiple passes of the paver-finisher shall not be permitted. The equipment and its operation shall produce a finished surface requiring no hand finishing, other than the use of cutting straightedges, except in very infrequent instances. No water, other than true fog sprays (mist), shall be applied to the concrete surface during paving and finishing.

3.4.4 Fixed Form Paving

Forms shall be steel, except that wood forms may be used for curves having a radius of 45 m or less, and for fillets. Forms may be built up with metal or wood, added only to the base, to provide an increase in depth of not more than 25 percent. The base width of the form shall be not less than eight-tenths of the vertical height of the form, except that forms 200 mm or less in vertical height shall have a base width not less than the vertical height of the form. Wood forms for curves and fillets shall be adequate in strength and rigidly braced. Forms shall be set on firm material cut true to grade so that each form section when placed will be firmly in contact with the underlying layer for its entire base. Forms shall not be set on blocks or on built-up spots of underlying material. Forms shall remain in place at least 12 hours after the concrete has been placed. Forms shall be removed without injuring the concrete.

3.4.5 Slipform Paving

The slipform paver shall shape the concrete to the specified and indicated cross section in one pass, and shall finish the surface and edges so that only a very minimum amount of hand finishing is required. Dowels shall not be installed by dowel inserters attached to the paver or by any other means of inserting the dowels into the plastic concrete.

3.4.6 Placing Reinforcing Steel

Reinforcement shall be positioned on suitable chairs securely fastened to the subgrade prior to concrete placement, or may be placed on an initial layer of consolidated concrete, with the subsequent layer placed within 30 minutes of the first layer placement.

3.4.7 Placing Dowels and Tie Bars

Dowels shall be installed with alignment not greater than 1 mm per 100 mm. Except as otherwise specified below, location of dowels shall be within a horizontal tolerance of plus or minus 15 mm and a vertical tolerance of plus or minus 5 mm. The portion of each dowel intended to move within the concrete or expansion cap shall be painted with one coat of rust inhibiting primer paint, and then oiled just prior to placement. Dowels and tie bars in joints shall be omitted when the center of the dowel or tie bar is located within a horizontal distance from an intersecting joint equal to or less than one-fourth of the slab thickness.

3.4.7.1 Contraction Joints

Dowels and tie bars in longitudinal and transverse contraction joints within the paving lane shall be held securely in place by means of rigid metal basket assemblies. The dowels and tie bars shall be welded to the assembly or held firmly by mechanical locking arrangements that will prevent them from becoming distorted during paving operations. The basket assemblies shall be held securely in the proper location by means of suitable anchors.

3.4.7.2 Construction Joints-Fixed Form Paving

Installation of dowels and tie bars shall be by the bonded-in-place method, supported by means of devices fastened to the forms. Installation by removing and replacing in preformed holes will not be permitted.

3.4.7.3 Dowels Installed in Hardened Concrete

Installation shall be by bonding the dowels into holes drilled into the hardened concrete. Holes approximately 3 mm greater in diameter than the dowels shall be drilled into the hardened concrete. Dowels shall be bonded in the drilled holes using epoxy resin injected at the back of the hole before installing the dowel and extruded to the collar during insertion of the dowel so as to completely fill the void around the dowel. Application by buttering the dowel shall not be permitted. The dowels shall be held in alignment at the collar of the hole, after insertion and before the grout hardens, by means of a suitable metal or plastic collar fitted around the dowel. The vertical alignment of the dowels shall be checked by placing the straightedge on the surface of the pavement over the top of the dowel and measuring the vertical distance between the straightedge and the beginning and ending point of the exposed part of the dowel.

3.4.7.4 Expansion Joints

Dowels in expansion joints shall be installed by the bonded-in-place method or by bonding into holes drilled in hardened concrete, using procedures specified above.

3.5 FINISHING

Clary screeds, "bridge deck" finishers, or other rotating pipe or tube type equipment shall not be permitted. The sequence of machine operations shall be transverse finishing, longitudinal machine floating if used, straightedge finishing, texturing, and then edging of joints. Hand finishing shall be used only infrequently and only on isolated areas of odd slab shapes and in the event of a breakdown of the mechanical finishing equipment. Supplemental hand finishing for machine finished pavement shall be kept to an absolute minimum. Equipment to be used for supplemental hand

finishing shall primarily be 3 to 4 m cutting straightedges; only very sparing use of bull floats shall be allowed. At no time shall water be added to the surface of the slab in any way, except for fog (mist) sprays to prevent plastic shrinkage cracking.

3.5.1 Machine Finishing With Fixed Forms

The machine shall be designed to ride the forms. Machines that cause displacement of the forms shall be replaced. The machine shall make only one pass over each area of pavement. If the equipment and procedures do not produce a surface of uniform texture, true to grade, in one pass, the operation shall be immediately stopped and the equipment, mixture, and procedures adjusted as necessary.

3.5.2 Machine Finishing With Slipform Pavers

If there is sufficient concrete slurry or fluid paste on the surface that it runs over the edge of the pavement, the paving operation shall be immediately stopped and the equipment, mixture, or operation modified to prevent formation of such slurry. Any slurry which does run down the vertical edges shall be immediately removed. No slurry, concrete or concrete mortar shall be used to build up along the edges of the pavement to compensate for excessive edge slump, either while the concrete is plastic or after it hardens.

3.5.3 Surface Correction

While the concrete is still plastic, irregularities and marks in the pavement surface shall be eliminated by means of cutting straightedges, 3 to 4 m in length. Depressions shall be filled with freshly mixed concrete, struck off, consolidated, and refinished. Projections above the required elevation shall also be struck off and refinished. Long-handled, flat "bull floats" shall be used sparingly and only as necessary to correct minor, scattered surface defects. Finishing with hand floats and trowels shall be held to the absolute minimum necessary. Joints and edges shall not be overfinished.

3.5.4 Hand Finishing

Hand finishing operations shall be used only for those unusual slabs as specified previously. Grate tampers (jitterbugs) shall not be used. As soon as placed and vibrated, the concrete shall be struck off and screeded. The surface shall be tamped with a strike-off and tamping screed, or vibratory screed. Immediately following the final tamping of the surface, the pavement shall be floated longitudinally. Long-handled, flat bull floats shall be used sparingly and only as necessary to correct surface defects. Finishing with hand floats and trowels shall be held to the absolute minimum necessary. Joints and edges shall not be overfinished. No water shall be added to the pavement during finishing operations.

3.5.5 Texturing

Before the surface sheen has disappeared and before the concrete hardens, the surface of the pavement shall be given a texture as described herein. After curing is complete, all textured surfaces shall be thoroughly power broomed to remove all debris. The concrete in areas of recesses for tie-down anchors, lighting fixtures, and other outlets in the pavement shall be finished to provide a surface of the same texture as the surrounding area.

3.5.5.1 Fabric-Drag Surface Finish

Surface texture shall be applied by dragging the surface of the pavement, in the direction of the concrete placement, with a moist fabric drag. The dragging shall produce a uniform finished surface having a fine sandy texture without disfiguring marks.

3.5.5.2 Broom Texturing

Surface texture shall be applied using a mechanical stiff bristle broom drag of a type that will uniformly score the surface transverse to the pavement center line. The broom shall be capable of traversing the full width of the pavement in a single pass at a uniform speed and with a uniform pressure. Successive passes of the broom shall be overlapped the minimum necessary to obtain a uniformly textured surface. The scores should be uniform in appearance and approximately 1.5 mm in depth but not more than 3 mm in depth. Hand brooming will be permitted only on isolated odd shaped slabs or slabs where hand finishing is permitted.

3.5.6 Edging

After texturing has been completed, the edge of the slabs along the forms shall be carefully finished with an edging tool to form a smooth rounded surface of 3 mm radius. No water shall be added to the surface during edging.

3.6 CURING

Concrete shall be continuously protected against loss of moisture and rapid temperature changes for at least 7 days from the completion of finishing operations. Unhardened concrete shall be protected from rain and flowing water. During hot weather with low humidity and/or wind, the Contractor shall institute measures to prevent plastic shrinkage cracks from developing. ACI 305R contains means of predicting plastic shrinkage cracking and preventative measures. Plastic shrinkage cracks that occur shall be filled by injection of epoxy resin after the concrete hardens. Plastic shrinkage cracks shall never be troweled over or filled with slurry. Curing shall be accomplished by one of the following methods.

3.6.1 Membrane Curing

A uniform coating of white-pigmented membrane-forming curing compound shall be applied to the entire exposed surface of the concrete including pavement edges as soon as the free water has disappeared from the surface after finishing. If evaporation is high and no moisture is present on the surface even though bleeding has not stopped, fog sprays shall be used to keep the surface moist until setting of the cement occurs. Curing compound shall then be immediately applied. Curing compound shall be applied to the finished surfaces by means of a self-propelled automatic spraying machine, equipped with multiple spraying nozzles with wind shields, spaning the newly paved lane. The curing compound shall be applied at a maximum application rate of 5 square meters per L. The application of curing compound by hand-operated, mechanical powered pressure sprayers will be permitted only on odd widths or shapes of slabs where indicated and on concrete surfaces exposed by the removal of forms. The compound shall form a uniform, continuous, cohesive film that will not check, crack, or peel and that will be free from pinholes and other discontinuities. Areas where the curing compound develops the above defects or is damaged by heavy

rainfall, sawing or other construction operations within the curing period, shall be immediately resprayed.

3.6.2 Moist Curing

Concrete to be moist-cured shall be maintained continuously wet for the entire curing period, commencing immediately after finishing. Surfaces shall be cured by ponding, by continuous sprinkling, by continuously saturated burlap or cotton mats, or by continuously saturated plastic coated burlap. Impervious sheet curing shall not be used.

3.7 JOINTS

No deviation from the jointing pattern shown on the drawings shall be made without written approval of the Design District Pavement or Geotechnical Engineer. All joints shall be straight, perpendicular to the finished grade of the pavement, and continuous from edge to edge or end to end of the pavement with no abrupt offset and no gradual deviation greater than 13 mm.

3.7.1 Longitudinal Construction Joints

Dowels shall be installed in the longitudinal construction joints, or the edges shall be thickened as indicated.

3.7.2 Transverse Construction Joints

Transverse construction joints shall be installed at a planned transverse joint, at the end of each day's placing operations and when concrete placement is interrupted. Transverse construction joints shall be constructed either by utilizing headers and hand placement and finishing techniques, or by placing concrete beyond the transverse construction joint location and then saw cutting full depth and removing concrete back to the transverse construction joint location. For the latter case, dowels shall be installed using methods for dowels installed in hardened concrete described above. All transverse construction joints shall be dowelled.

3.7.3 Expansion Joints

Expansion joints shall be formed where indicated, and about any structures and features that project through or into the pavement, using preformed joint filler of the type, thickness, and width indicated, and shall extend the full slab depth. Edges of the concrete at the joint face shall be edged. The joint filler strips shall be installed to form a recess at the pavement surface to be filled with joint sealant. Expansion joints shall be constructed with dowels for load transfer.

3.7.4 Slip Joints

Slip joints shall be installed the full depth of the slab using expansion joint preformed joint filler material attached to the face of the original concrete placement. A reservoir for joint sealant shall be constructed at the top of the joint. Edges of the joint face shall be edged.

3.7.5 Contraction Joints

Transverse and longitudinal contraction joints shall be of the weakened-plane or dummy type. Longitudinal contraction joints shall be constructed by sawing a groove in the hardened concrete with a power-driven

saw. Transverse contraction joints shall be constructed in conformance with requirements for sawed joints.

3.7.5.1 Sawed Joints

Sawed contraction joints shall be constructed by sawing a groove in the concrete with a 3 mm blade to the indicated depth. The time of initial sawing shall vary depending on existing and anticipated weather conditions and shall be such as to prevent uncontrolled cracking of the pavement. Sawing of the joints shall commence as soon as the concrete has hardened sufficiently to permit cutting the concrete without chipping, spalling, or tearing. The joints shall be sawed at the required spacing consecutively in the sequence of the concrete placement. Sawing at a given joint location shall be discontinued when a crack develops ahead of the saw cut. Immediately after the joint is sawed, the saw cut and adjacent concrete surface shall be thoroughly flushed with water until all waste from sawing is removed from the joint. The surface shall be resprayed with curing compound as soon as free water disappears. The top of the joint opening and the joint groove at exposed edges shall be tightly sealed with cord or backer rod before the concrete in the region of the joint is resprayed with curing compound.

3.7.5.2 Insert-Type Joints

Insert-type joints shall not be used for slipformed pavements. Insert-type non-metallic contraction joints shall be constructed by installing a preformed insert in the plastic concrete to form a weakened plane to induce cracking. Inserts shall be installed using a machine equipped with a vibrating bar for cutting a groove in the plastic concrete for placement of the insert or for vibrating the insert into place at the prescribed joint location. The installed insert shall be perpendicular to the finished grade of the pavement, with the top of the insert not more than 3 mm below the pavement surface.

3.7.6 Thickened Edge Joints

Underlying material in the transition area shall meet the requirements for smoothness and compaction specified for all other areas of the underlying material.

3.7.7 Special Joints

Special joints (undercut joints) shall be constructed adjacent to existing pavement as indicated. The concrete shall be worked under the edge of the existing pavement to completely fill the void and shall be thoroughly consolidated by the use of hand-held vibrators.

3.8 REPAIR, REMOVAL, AND REPLACEMENT OF SLABS

New pavement slabs that contain full-depth cracks shall be removed and replaced, as specified herein at no cost to the Government. Removal and replacement shall be full depth, shall be full width of the paving lane, and the limit of removal shall be from each original transverse joint . The Contracting Officer will determine whether cracks extend full depth of the pavement and may require minimum 150 mm diameter cores to be drilled on the crack to determine depth of cracking. Cores shall be drilled and the hole later filled by the Contractor with a well consolidated concrete mixture bonded to the walls of the hole with epoxy resin. Drilling of cores and refilling holes shall be at no expense to the Government. Cracks

that do not extend full depth of slab shall be cleaned and then pressure injected with epoxy resin, Type IV, Grade 1. The Contractor shall ensure that the crack is not widened during epoxy resin injection. Where a full depth crack intersects the original transverse joint, the slab(s) containing the crack shall be removed and replaced, with dowels installed, as required below. Spalls along joints shall be repaired as specified.

3.8.1 Removal and Replacement of Full Slabs

Unless there are keys or dowels present, all edges of the slab shall be sawcut full depth. If keys, dowels, or tie bars are present along any edges, these edges shall be sawed full depth 150 mm from the edge if only keys are present, or just beyond the end of dowels or tie bars if they are present. These joints shall then be carefully sawed on the joint line to within 25 mm of the depth of the dowel or key. The main slab shall be further divided by sawing full depth, at appropriate locations, and each piece lifted out and removed. The narrow strips along keyed or doweled edges shall be carefully broken up and removed. Care shall be taken to prevent damage to the dowels, tie bars, or keys or to concrete to remain in place. Protruding portions of dowels shall be painted and lightly oiled. The joint face below keys or dowels shall be suitably trimmed so that there is no abrupt offset. If underbreak occurs at any point along any edge, the area shall be hand-filled with concrete, producing an even joint face from top to bottom, before replacing the removed slab. If underbreak over 100 mm deep occurs, the entire slab containing the underbreak shall be removed and replaced. Where there are no dowels, tie bars, or keys on an edge, or where they have been damaged, dowels of the size and spacing as specified for other joints in similar pavement shall be installed by epoxy grouting them into holes drilled into the existing concrete. Original damaged dowels or tie bars shall be cut off flush with the joint face. All four edges of the new slab shall thus contain dowels or original keys or original tie bars. Prior to placement of new concrete, the underlying material shall be graded and recompacted, and the surfaces of all four joint faces shall be cleaned of all loose material and contaminants, and coated with a double application of membrane forming curing compound as bond breaker. Placement of concrete shall be as specified for original construction. The resulting joints around the new slab shall be prepared and sealed as specified.

3.8.2 Repairing Spalls Along Joints

Spalls along joints and cracks shall be repaired by first making a vertical saw cut at least 25 mm outside the spalled area and to a depth of at least 50 mm. Saw cuts shall be straight lines forming rectangular areas. The concrete between the saw cut and the joint, or crack, shall be chipped out to remove all unsound concrete. The cavity shall be thoroughly cleaned with high pressure water jets supplemented with compressed air to remove all loose material. Immediately before filling the cavity, a prime coat shall be applied to the dry cleaned surface of all sides and bottom of the cavity, except any joint face. The prime coat shall be applied in a thin coating and scrubbed into the surface with a stiff-bristle brush. Prime coat for portland cement repairs shall be a neat cement grout and for epoxy resin repairs shall be epoxy resin, Type III, Grade 1. The cavity shall be filled with low slump portland cement concrete or mortar, or with epoxy resin concrete or mortar. Portland cement concrete shall be used for larger spalls, those more than 0.009 cubic meter in size after removal operations; portland cement mortar shall be used for spalls between 0.00085 and 0.009 cubic meter; and epoxy resin mortar or Type III, Grade 3 epoxy resin for those spalls less than 0.00085 cubic meter in size after removal

operations. Portland cement concretes and mortars shall be very low slump mixtures, proportioned, mixed, placed, tamped, and cured. Epoxy resin mortars shall be made with Type III, Grade 1, epoxy resin, using proportions, mixing, placing, tamping and curing procedures as recommended by the manufacturer. Any repair material on the surrounding surfaces of the existing concrete shall be removed before it hardens. Where the spalled area abuts a joint, an insert or other bond-breaking medium shall be used to prevent bond at the joint face. A reservoir for the joint sealant shall be sawed to the dimensions required for other joints. In lieu of sawing, spalls not adjacent to joints, and popouts, both less than 150 mm in maximum dimension, may be prepared by drilling a core 50 mm in diameter greater than the size of the defect, centered over the defect, and 50 mm deep or 13 mm into sound concrete, whichever is greater. The core hole shall be repaired as specified above for other spalls.

3.8.3 Areas Defective in Plan Grade or Smoothness

In areas not meeting the specified limits for surface smoothness and plan grade, high areas shall be reduced to attain the required smoothness and grade, except as depth is limited below. High areas shall be reduced by grinding the hardened concrete with a surface grinding machine after the concrete is 14 days or more old. The depth of grinding shall not exceed 6 mm. All pavement areas requiring plan grade or surface smoothness corrections in excess of the specified limits, shall be removed and replaced. In pavement areas given a wire comb or tined texture, areas exceeding 2 square meters that have been corrected by rubbing or grinding shall be retextured by grooving machine sawn grooves meeting the requirements for the wire comb or tined texture. All areas in which grinding has been performed will be subject to the thickness tolerances specified in paragraph Thickness. Any grinding performed on individual slabs with excessive deficiencies shall be performed at the Contractor's own decision without entitlement to additional compensation if eventual removal of the slab is required.

3.9 NOT USED

3.10 PAVEMENT PROTECTION

The Contractor shall protect the pavement against all damage prior to final acceptance of the work. Traffic shall be excluded from the new pavement. As a construction expedient in paving intermediate lanes between newly paved pilot lanes, operation of the hauling equipment will be permitted on the new pavement after the pavement has been cured for 7 days and the joints have been sealed or otherwise protected. All new and existing pavement carrying construction traffic or equipment shall be continuously kept completely clean. Special cleaning and care shall be used where Contractor's traffic uses or crosses active airfield pavement.

3.11 TESTING AND INSPECTION FOR CONTRACTOR QUALITY CONTROL (CQC)

Paragraph ACCEPTABILITY OF WORK contains additional CQC requirements. The Contractor shall perform the inspection and tests described below and, based upon the results of these inspections and tests, shall take the action required and submit reports as specified. When, in the opinion of the Contracting Officer, the paving operation is out of control, concrete placement shall cease.

3.11.1 Batch Plant Control

A daily report shall be prepared indicating checks made for scale accuracy with test weights, checks of batching accuracy, and corrective action taken prior to and during placement for weighing or batching, type and source of cement used, type and source of pozzolan or slag used, amount and source of admixtures used, aggregate source, the required aggregate and water masses per cubic meter, amount of water as free moisture in each size of aggregate, and the batch aggregate and water masses per cubic meter for each class of concrete batched during each day's plant operation.

3.11.2 Concrete Mixture

a. Air Content Testing. Air content tests shall be made when test specimens are fabricated. In addition, at least two other tests for air content shall be made on randomly selected batches of each separate concrete mixture produced during each 8-hour period of paving. Whenever air content reaches specified limits, an immediate confirmatory test shall be made. If the second test also shows air content at or exceeding specified limits, an adjustment shall immediately be made in the amount of air-entraining admixture batched to bring air content within specified limits. If the next adjusted batch of concrete is not within specified limits, concrete placement shall be halted until concrete air content is within specified limits.

b. Slump Testing. Slump tests shall be made when test specimens are fabricated. Additional tests shall be made when excessive variation in workability is reported by the placing foreman or Government inspector. Whenever slump approaches the maximum limit, an adjustment shall immediately be made in the batch masses of water and fine aggregate, without exceeding the maximum w/(c+p). When a slump result exceeds the specification limit, no further concrete shall be delivered to the paving site until adjustments have been made and slump is again within the limit.

c. Temperature. The temperature of the concrete shall be measured when strength specimens are fabricated.

d. Concrete Strength Testing. Four (4) cylinders from the same batch shall be fabricated, cured and tested for compressive strength, testing two cylinders at 7-day and two cylinders at 28-day age. Control charts for strength, showing the 7-day and 28-day CQC compressive strengths, and the 28-day required compressive strength, shall be maintained and submitted with weekly CQC Reports.

3.11.3 Inspection Before Placing

Underlying materials, joint locations and types, construction joint faces, forms, reinforcing, dowels, and embedded items shall be inspected by a Registered Engineer in sufficient time prior to each paving operation in order to certify to the Contracting Officer that they are ready to receive concrete. The results of each inspection shall be reported in writing, and the certification signed by the Registered Engineer, prior to each days' paving.

3.11.4 Paving Operations

The placing foreman shall supervise all placing and paving operations, shall determine that the correct quality of concrete is placed in each location as shown, shall insure that the concrete is consolidated full

depth and that finishing is performed as specified. The placing foreman shall be responsible for measuring and recording concrete temperatures and ambient temperature hourly during placing operations, weather conditions, time of placement, volume of concrete placed, and method of paving and any problems encountered.

3.11.5 Curing Inspection

a. Moist Curing Inspections. Each day on both work and non-work days, an inspection shall be made of all areas subject to moist curing. The surface moisture condition shall be noted and recorded. When any inspection finds an area of inadequate curing, immediate corrective action shall be taken, and the required curing period for the area shall be extended by 1 day.

b. Membrane Curing Inspection. At the end of each day's placement, the CQC Representative shall determine the quantity of compound used by measurement of the container; shall determine the area of concrete surface covered; shall then compute the rate of coverage in square meters per L and shall also note whether or not coverage is uniform. When the coverage rate of the curing compound is less than that specified or when the coverage is not uniform, the entire surface shall be sprayed again.

3.11.6 Cold-Weather Protection

At least once per day, an inspection shall be made of all areas subject to cold-weather protection. Any deficiencies shall be noted, corrected, and reported.

3.11.7 Reports

All results of tests or inspections conducted shall be reported informally as they are completed and in writing daily. A weekly report, signed by a registered engineer, shall be prepared for the updating of control charts and test data, and all CQC inspections and actions covering the entire period from the start of the construction through the current week. Reports of failures and the action taken shall be confirmed in writing in the routine reports. The Contracting Officer has the right to examine all CQC records. A copy of weekly reports shall be faxed to the Design District Pavement or Geotechnical Engineer. At the completion of concrete placement, a certification report shall be prepared containing mix designs, all updated control charts and concrete test data, quality control reports, smoothness reports, and other pertinent data on the concrete, with a certification by a registered engineer that the concrete placed meets all specification requirements. A copy of the certification report shall be mailed to the Design District pavement or Geotechnical Engineer.

-- End of Section --

SECTION 02821

FENCING

PART 1 GENERAL

1.1 REFERENCES

The publications listed below form a part of this specification to the extent referenced. The publications are referred to in the text by basic designation only.

AMERICAN SOCIETY FOR TESTING AND MATERIALS (ASTM)

ASTM A 121	(1992a) Zinc-Coated (Galvanized) Steel Barbed Wire
ASTM A 153/A 153M	(1995) Zinc-Coated (Hot Dip) on Iron and Steel Hardware
ASTM A 392	(1996) Zinc-Coated Steel Chain-Link Fence Fabric
ASTM A 491	(1996) Aluminum-Coated Steel Chain-Link Fence Fabric
ASTM A 585	(1992) Aluminum-Coated Steel Barbed Wire
ASTM A 780	(1993a) Repair of Damaged and Uncoated Areas of Hot-Dipped Galvanized Coatings
ASTM A 824	(1995) Metallic-Coated Steel Marcelled Tension Wire for Use With Chain Link Fence
ASTM C 94	(1997) Ready-Mixed Concrete
ASTM F 626	(1996) Fence Fittings
ASTM F 1043	(1995) Strength and Protective Coatings on Metal Industrial Chain-Link Fence Framework
ASTM F 1083	(1997) Specification for Pipe, Steel, Hot-Dipped Zinc-Coated (Galvanized) Welded, for Fence Structures

1.2 SUBMITTALS

Government approval is required for submittals with a "GA" designation; submittals having an "FIO" designation are for information only. The following shall be submitted in accordance with Section 01330 SUBMITTAL PROCEDURES:

SD-13 Certificates

Chain Link Fence; FIO.

Statement, signed by an official authorized to certify on behalf of the manufacturer, attesting that the chain link fence and component materials meet the specified requirements.

SD-19 Operation and Maintenance Manuals

PART 2 PRODUCTS

2.1 FENCE FABRIC

Fence fabric shall conform to the following:

2.1.1 Chain Link Fence Fabric

ASTM A 392, Class 1, zinc-coated steel wire with minimum coating weight of 370 grams of zinc per square meter of coated surface, or ASTM A 491, Type I, aluminum-coated steel wire. Fabric shall be fabricated of 9 gauge wire woven in 50 mm mesh. Fabric height shall be as shown. Fabric shall be twisted and barbed on the top selvage and knuckled on the bottom selvage.

2.2 NOT USED

2.3 POSTS

2.3.1 Metal Posts for Chain Link Fence

ASTM F 1083, zinc-coated. Group IA, with external coating Type A steel pipe. Group IC steel pipe, zinc-coated with external coating Type A or Type B and Group II , formed steel sections, shall meet the strength and coating requirements of ASTM F 1043. Group III, ASTM F 1043 steel H-section may be used for line posts in lieu of line post shapes specified for the other classes. Sizes shall be as shown on the drawings. Line posts and terminal (corner, gate, and pull) posts selected shall be of the same designation throughout the fence.

2.4 BRACES AND RAILS

ASTM F 1083, zinc-coated, Group IA, steel pipe, size NPS 1-1/4. Group IC steel pipe, zinc-coated, shall meet the strength and coating requirements of ASTM F 1043. Group II , formed steel sections, size 42 mm, conforming to ASTM F 1043, may be used as braces and rails if Group II line posts are furnished.

2.5 WIRE

2.5.1 Tension Wire

Tension wire shall be Type I or Type II, Class 2 coating, in accordance with ASTM A 824.

2.6 ACCESSORIES

ASTM F 626. Ferrous accessories shall be zinc or aluminum coated. Truss rods shall be furnished for each terminal post. Truss rods shall be provided with turnbuckles or other equivalent provisions for adjustment. Barbed wire shall be 2 strand, 12-1/2 gauge wire, zinc-coated, Class 3 in accordance with ASTM A 121 or aluminum coated Type I in accordance with ASTM A 585. Barbed wire shall be four-point barbed type steel wire.

Barbed wire support arms shall be the single arm type and of the design required for the post furnished. Tie wire for attaching fabric to rails, braces, and posts shall be 9 gauge steel wire and match the coating of the fence fabric. Miscellaneous hardware coatings shall conform to ASTM A 153/A 153M unless modified.

2.7 NOT USED

2.8 CONCRETE

ASTM C 94, using 19 mm maximum size aggregate, and having minimum compressive strength of 21 MPa at 28 days. Grout shall consist of one part portland cement to three parts clean, well-graded sand and the minimum amount of water to produce a workable mix.

PART 3 EXECUTION

3.1 INSTALLATION

Fence shall be installed to the lines and grades indicated. The area on either side of the fence line shall be cleared to the extent indicated. Line posts shall be spaced equidistant at intervals not exceeding 3 m. Terminal (corner, gate, and pull) posts shall be set at abrupt changes in vertical and horizontal alignment. Fabric shall be continuous between terminal posts; however, runs between terminal posts shall not exceed 152.4 m. Any damage to galvanized surfaces, including welding, shall be repaired with paint containing zinc dust in accordance with ASTM A 780.

3.2 EXCAVATION

Post holes shall be cleared of loose material. Waste material shall be spread where directed. The ground surface irregularities along the fence line shall be eliminated to the extent necessary to maintain a 25 mm clearance between the bottom of the fabric and finish grade.

3.3 POST INSTALLATION

3.3.1 Posts for Chain Link Fence

Posts shall be set plumb and in alignment. Except where solid rock is encountered, posts shall be set in concrete to the depth indicated on the drawings. Where solid rock is encountered with no overburden, posts shall be set to a minimum depth of 457 mm in rock. Where solid rock is covered with an overburden of soil or loose rock, posts shall be set to the minimum depth indicated on the drawing unless a penetration of 457 mm in solid rock is achieved before reaching the indicated depth, in which case depth of penetration shall terminate. All portions of posts set in rock shall be grouted. Portions of posts not set in rock shall be set in concrete from the rock to ground level. Posts set in concrete shall be set in holes not less than the diameter shown on the drawings. Diameters of holes in solid rock shall be at least 25 mm greater than the largest cross section of the post. Concrete and grout shall be thoroughly consolidated around each post, shall be free of voids and finished to form a dome. Concrete and grout shall be allowed to cure for 72 hours prior to attachment of any item to the posts. Group II line posts may be mechanically driven, for temporary fence construction only, if rock is not encountered. Driven posts shall be set to a minimum depth of 914 mm and shall be protected with drive caps when being set. For high security fences, fence post rigidity shall be tested by applying a 222.4 newtons force on the post,

perpendicular to the fabric, at 1.52 m above ground; post movement measured at the point where the force is applied shall be less than or equal to 19 mm from the relaxed position; every tenth post shall be tested for rigidity; when a post fails this test, further tests on the next four posts on either side of the failed post shall be made; all failed posts shall be removed, replaced, and retested at the Contractor's expense.

3.4 RAILS

3.4.1 Top Rail

Top rail shall be supported at each post to form a continuous brace between terminal posts. Where required, sections of top rail shall be joined using sleeves or couplings that will allow expansion or contraction of the rail. Top rail, if required for high security fence, shall be installed as indicated on the drawings.

3.4.2 Bottom Rail

The bottom rail shall be bolted to double rail ends and double rail ends shall be securely fastened to the posts. Bolts shall be peened to prevent easy removal. Bottom rail shall be installed before chain link fabric.

3.5 BRACES AND TRUSS RODS

Braces and truss rods shall be installed as indicated and in conformance with the standard practice for the fence furnished. Horizontal (compression) braces and diagonal truss (tension) rods shall be installed on fences over 1.83 m in height. A center brace or 2 diagonal truss rods shall be installed on 3.66 m fences. Braces and truss rods shall extend from terminal posts to line posts. Diagonal braces shall form an angle of approximately 40 to 50 degrees with the horizontal.

3.6 TENSION WIRES

Tension wires shall be installed along the top and bottom of the fence line and attached to the terminal posts of each stretch of the fence. Top tension wires shall be installed within the top 102 mm of the installed fabric. Bottom tension wire shall be installed within the bottom 152 mm of the installed fabric. Tension wire shall be pulled taut and shall be free of sag.

3.7 CHAIN LINK FABRIC

Chain link fabric shall be installed on the side of the post indicated. Fabric shall be attached to terminal posts with stretcher bars and tension bands. Bands shall be spaced at approximately 381 mm intervals. The fabric shall be installed and pulled taut to provide a smooth and uniform appearance free from sag, without permanently distorting the fabric diamond or reducing the fabric height. Fabric shall be fastened to line posts at approximately 381 mm intervals and fastened to all rails and tension wires at approximately 305 mm intervals. Fabric shall be cut by untwisting and removing pickets. Splicing shall be accomplished by weaving a single picket into the ends of the rolls to be joined. The bottom of the installed fabric shall be 25 mm plus or minus 13 mm above the ground. For high security fence, after the fabric installation is complete, the fabric shall be exercised by applying a 222 newtons push-pull force at the center of the fabric between posts; the use of a 133 newtons pull at the center of the panel shall cause fabric deflection of not more than 63.5 mm

when pulling fabric from the post side of the fence; every second fence panel shall meet this requirement; all failed panels shall be resecured and retested at the Contractor's expense.

3.8 BARBED WIRE SUPPORTING ARMS AND BARBED WIRE

3.8.1 General Requirements

Barbed wire supporting arms and barbed wire shall be installed as indicated and as recommended by the manufacturer. Supporting arms shall be anchored with 9.5 mmdiameter plain pin rivets or, at the Contractor's option, with studs driven by low-velocity explosive-actuated tools for steel, wrought iron, ductile iron, or malleable iron. Studs driven by an explosive-actuated tool shall not be used with gray iron or other material that can be fractured. A minimum of two studs per support arm shall be used. Barbed wire shall be pulled taut and attached to the arms with clips or other means that will prevent easy removal.

3.9 NOT USED

3.10 NOT USED

3.11 GROUNDING

Fences shall be grounded on each side of all gates, at each corner, at the closest approach to each building located within 15 m of the fence, and where the fence alignment changes more than 15 degrees. Grounding locations shall not exceed 60 m. Fences crossed by powerlines of 600 volts or more shall be grounded at or near the point of crossing and at distances not exceeding 45 m on each side of crossing. Ground conductor shall consist of No. 8 AWG solid copper wire. Grounding electrodes shall be 19 mm by 3.05 m long copper-clad steel rod. Electrodes shall be driven into the earth so that the top of the electrode is at least 150 mm below the grade. Where driving is impracticable, electrodes shall be buried a minimum of 305 mm deep and radially from the fence. The top of the electrode shall be not less than 0.6 m or more than 2.4 m from the fence. Ground conductor shall be clamped to the fence and electrodes with bronze grounding clamps to create electrical continuity between fence posts, fence fabric, and ground rods. After installation the total resistance of fence to ground shall not be greater than 25 ohms.

-- End of Section --

SECTION 02935

TURF

PART 1 GENERAL

1.1 REFERENCES

The publications listed below form a part of this specification to the extent referenced. The publications are referred to in the text by basic designation only.

AGRICULTURAL MARKETING SERVICE (AMS)

AMS-01	(Amended thru: Aug 1988) Federal Seed Act Regulations (Part 201-202)

AMERICAN SOCIETY FOR TESTING AND MATERIALS (ASTM)

ASTM D 977	(1991) Emulsified Asphalt
ASTM D 2028	(1976; R 1992) Cutback Asphalt (Rapid-Curing Type)
ASTM D 2607	(1969) Peats, Mosses, Humus, and Related Products

COMMERCIAL ITEM DESCRIPTIONS (CID)

CID A-A-1909	(Basic; Notice 1) Fertilizer

1.2 SUBMITTALS

Government approval is required for submittals with a "GA" designation; submittals having an "FIO" designation are for information only. The following shall be submitted in accordance with Section 01330 SUBMITTAL PROCEDURES:

SD-01 Data

Manufacturer's Literature; FIO.

Manufacturer's literature discussing physical characteristics, application and installation instructions for erosion control material, and for chemical treatment material.

SD-07 Schedules

Equipment List; FIO.

A list of proposed pesticide application, seeding and mulching equipment to be used in performance of turfing operation, including descriptive data and calibration tests.

SD-08 Statements

Delivery; FIO.

Delivery schedule, at least 10 days prior to the intended date of the first delivery.

Application of Pesticide; FIO.

Pesticide treatment plan with proposed sequence of pesticide treatment work. The pesticide trade name, chemical composition, formulation, concentration, application rate of active ingredients and method of application for all materials; and the name and state license number of the state certified applicator shall be included.

Maintenance Report; FIO.

Written record of maintenance work performed.

Turf Establishment Period; FIO.

Written calendar time period for the turf establishment period. When there is more than one turf establishment period, the boundaries of the turfed area covered for each period shall be described.

SD-13 Certificates

Certificates of compliance certifying that materials meet the requirements specified, prior to the delivery of materials. Certified copies of the reports for the following materials shall be included:

Seed; FIO.

For mixture, percent pure live seed, minimum percent germination and hard seed, maximum percent weed seed content, date tested and state certification.

Sod; FIO.

For species, mixture percentage, percent purity, field location.

Fertilizer; FIO.

For chemical analysis, composition percent.

Agricultural Limestone; FIO.

For calcium carbonate equivalent and sieve analysis.

Peat; FIO.

For compliance with ASTM D 2607.

Asphalt Adhesive; FIO.

For compliance with ASTM D 977 and ASTM D 2028.

Pesticide Material; FIO.

For EPA registration number and registered uses.

Topsoil; FIO.

For pH, particle size, chemical analysis and mechanical analysis.

1.3 SOURCE INSPECTIONS

Sod material will be subject to inspection by the Contracting Officer at the growing site.

1.4 DELIVERY, INSPECTION, STORAGE, AND HANDLING

1.4.1 Delivery

1.4.1.1 Protection

Sod shall be protected from drying out and contamination during delivery.

1.4.1.2 Topsoil

A soil test shall be provided for topsoil delivered to the site.

1.4.1.3 Soil Amendments

Soil amendments shall be delivered to the site in the original, unopened containers bearing the manufacturer's chemical analysis. In lieu of containers, soil amendments may be furnished in bulk. A chemical analysis shall be provided for bulk deliveries.

1.4.1.4 Pesticide

Pesticide material shall be delivered to the site in the original, unopened containers bearing legible labels indicating the Environmental Protection Agency (EPA) registration number and the manufacturer's registered uses.

1.4.2 Inspection

Seed and/or sod shall be inspected upon arrival at the job site by the Contracting Officer for conformity to type and quality in accordance with paragraph MATERIALS. Other materials shall be inspected for meeting specified requirements and unacceptable materials shall be removed from the job site.

1.4.3 Storage

Materials shall be stored in areas designated by the Contracting Officer. Sod shall be lightly sprinkled with water, covered with moist burlap, straw, or other covering and protected from exposure to wind and direct sunlight until planted. Covering for sod shall allow air to circulate and prevent internal heat from building up. Seed, lime and fertilizer shall be stored in cool, dry locations away from contaminants. Chemical treatment materials shall not be stored with other landscape materials.

1.4.4 Handling

1.4.4.1 Materials

Care shall be taken to avoid injury to sod and/or sprigs. Except for bulk deliveries, materials shall not be dropped or dumped from vehicles.

1.4.4.2 Time Limitation

a. Sod: Limitation of the time between harvesting and placing of sod shall be 36 hours.

PART 2 PRODUCTS

2.1 MATERIALS

2.1.1 Seed

2.1.1.1 Seed Classification

State-certified seed of the latest season's crop shall be provided in original sealed packages bearing the producer's guaranteed analysis for percentages of mixture, purity, germination, hard seed, weed seed content, and inert material. Labels shall be in conformance with AMS-01 and applicable state seed laws.

2.1.1.2 Seed Mixtures

Seed mixtures shall be proportioned by weight as follows:

Botanical Name	Common Name	Mixture Percent by Weight	Percent Pure Live Seed
Festuca Arundinacea	Kentucky 31 Tall Fescue	80	90

2.1.1.3 Quality

Weed seed shall not exceed 1 percent by weight of the total mixture. Wet, moldy, or otherwise damaged seed shall be rejected.

2.1.1.4 NOT USED

2.1.1.5 Temporary Seed

The temporary seed for erosion control shall be as follows:

Botanical Name	Common Name	Percent Pure Live Seed
Festuca Arundinacea	Kentucky 31 Tall Fescue	90

2.1.1.6 Seed Mixing

The field mixing of seed shall be performed on site in the presence of the Contracting Officer.

2.1.2 Sod

2.1.2.1 Sod Classification

State-certified sod shall be provided as classified by applicable state laws. Each individual sod section shall be of a size to permit rolling and lifting without breaking.

2.1.2.2 Grass Species

Grass species shall be proportioned as follows:

Botanical Name	Common Name	Mixture Percent
Festuca Arundinacea	Kentucky 31 Tall Fescue	90

2.1.2.3 Quality

The sod shall be relatively free of thatch, diseases, nematodes, soil-borne insects, weeds or undesirable plants, stones larger than 50 mm in any dimension, woody plant roots and other material detrimental to a healthy stand of turf. Sod that has become dry, moldy, or yellow from heating, or has irregularly shaped pieces of sod and torn or uneven ends shall be rejected.

2.1.2.4 Thickness

Sod shall be machine cut to a uniform thickness of 30 mm within a tolerance of 5 mm, excluding top growth and thatch. Measurement for thickness shall exclude top growth and thatch.

2.1.2.5 Anchors

Sod anchors shall be as recommended by the sod supplier.

2.1.3 NOT USED

2.1.4 Soil Amendments

Soil amendments shall consist of lime, fertilizer, organic soil amendments and soil conditioners meeting the following requirements.

2.1.4.1 Lime

Lime shall be agricultural limestone and shall have a minimum calcium carbonate equivalent of 90 percent and shall be ground to such a fineness that at least 90 percent will pass a 10-mesh sieve and at least 50 percent will pass a 60-mesh sieve.

2.1.4.2 Fertilizer

Fertilizer shall be commercial grade, free flowing, uniform in composition and conforming to CID A-A-1909. Granular Fertilizer: As recommended by the soil test.

2.1.4.3 Organic Soil Amendments

a. Topsoil: The existing surface soil shall be stripped and stockpiled on the site. When required beyond that available from stripping, the topsoil shall be delivered. Delivered topsoil shall conform to topsoil shall be amended as recommended by soil test.

b. Peat: Peat moss derived from a bog, swampland or marsh shall conform to ASTM D 2607.

c. Sand: Clean, free of toxic materials; 95 percent by weight shall pass a No. 10 sieve and 10 percent by weight shall pass a No. 16 sieve.

d. Rotted Manure: Well rotted, horse or cattle manure containing a maximum 25 percent by volume of straw, sawdust, or other bedding materials, free of stones, sticks, soil and containing no chemicals or ingredients harmful to plants.

e. Decomposed Wood Derivatives: Ground bark, sawdust, or other wood waste material free of stones, sticks, soil, and toxic substances harmful to plants, stabilized with nitrogen and having the following properties:

Particle Size: Minimum percent by weight passing:

Sieve Size	Percent
No. 4	95
No. 4	80

Nitrogen Content: Minimum percent based on dry weight:

Material	Percent
Redwood Sawdust	0.5
Fir Sawdust	0.7
Fir or Pine Bark	1.0

f. Calcined Clay: Granular particles produced from montmorillonite clay calcined to minimum temperature of 650 degrees C to the following gradation: minimum 90 percent passing No. 8, 99 percent retained on No. 60 sieve and maximum 2 percent passing No. 100 sieve. Bulk density: maximum 640 kg per cubic m.

2.1.4.4 Soil Conditioner

Soil conditioner shall be for single use or in combination to meet requirements for topsoil. Gypsum shall be commercially packaged, free flowing, minimum 95 percent calcium sulfate by volume.

2.1.5 Mulch

Mulch shall be free from weeds, mold, and other deleterious materials.

2.1.5.1 Straw

Straw shall be stalks from oats, wheat, rye, barley, or rice furnished in air-dry condition and with a consistency for placing with commercial mulch-blowing equipment.

2.1.5.2 Hay

Hay shall be native hay, sudan-grass hay, broomsedge hay, or other herbaceous mowings furnished in an air-dry condition suitable for placing with commercial mulch-blowing equipment.

2.1.5.3 Wood Cellulose Fiber

Wood cellulose fiber shall not contain any growth or germination-inhibiting factors and shall be dyed an appropriate color to facilitate visual metering during application. Composition on air-dry weight basis: 9 to 15 percent moisture, pH range from 4.5 to 6.0.

2.1.5.4 Wood Chips

Wood chips shall be chips or shredded bark with maximum particle size of 5 mm.

2.1.5.5 Paper Fiber Mulch

Paper fiber mulch shall be recycled news print that is shredded for the purpose of mulching seed.

2.1.6 Asphalt Adhesive

Asphalt adhesive shall conform to the following:

2.1.6.1 Emulsified Asphalt

Conforming to ASTM D 977, Grade SS-1.

2.1.6.2 Cutback Asphalt

Conforming to ASTM D 2028, designation RC-70.

2.1.7 Water

Water shall not contain elements toxic to plant life.

2.1.8 Pesticide

Pesticide shall be insecticide, herbicide, fungicide, nematocide, rodenticide and miticide. For the purpose of this specification, soil fumigant shall have the same requirements as a pesticide. The pesticide material shall be EPA registered and approved insecticide.

2.1.9 Erosion Control Material

Soil erosion control shall conform to the following:

2.1.9.1 Soil Erosion Control Blanket

Machine produced mat of wood excelsior formed from a web of interlocking wood fibers, covered on one side with either knitted straw blanket-like mat construction, covered with biodegradable plastic mesh, or interwoven biodegradable thread, plastic netting or twisted kraft paper cord netting.

2.1.9.2 Soil Erosion Control Fabric

Knitted construction of polypropylene yarn with uniform mesh openings 20 t0 25 mm with strips of biodegradable paper. Filler paper strips shall last

6 to 8 months.

2.1.9.3 Soil Erosion Control Net

Heavy, twisted jute mesh weighing approximately 605 grams per meter (1.22 pounds per yard) and 1200 mm wide with mesh openings of approximately 25 mm.

2.1.9.4 Soil Erosion Control Chemicals

High-polymer synthetic resin or cold-water emulsion of selected petroleum resins.

2.1.9.5 Hydrophilic Colloids

Hydrophilic colloids shall be physiologically harmless to plant and animal life, without phytotoxic agents. Colloids shall be naturally occurring, silicate powder based, and shall form a water insoluble membrane after curing. Colloids must resist mold growth.

2.1.9.6 Anchors

Erosion control anchor material shall be as recommended by the manufacturer.

PART 3 EXECUTION

3.1 SEEDING AND SODDING TIMES AND CONDITIONS

3.1.1 Seeding Time

Seed shall be sown from March 21 to May 20 for spring planting and from August 25 to October 15 for fall planting.

3.1.2 Sodding Time

Sod shall be placed from March 21 to May 20 for spring planting and from August 25 to October 15 for fall planting.

3.1.3 NOT USED

3.1.4 Turfing Conditions

Turf operations shall be performed only during periods when beneficial results can be obtained. When drought, excessive moisture or other unsatisfactory conditions prevail, the work shall be stopped when directed. When special conditions warrant a variance to the turf operations, proposed times shall be submitted to and approved by the Contracting Officer.

3.2 SITE PREPARATION

3.2.1 Grading

The Contracting Officer shall verify that finished grades are as indicated on drawings, and the placing of topsoil and the smooth grading has been completed.

3.2.2 Application of Soil Amendments

3.2.2.1 Soil Test

A soil test shall be performed for pH, chemical analysis and mechanical analysis to establish the quantities and type of soil amendments required to meet local growing conditions for the type and variety of turf specified.

3.2.2.2 Lime

Lime shall be applied at the rate recommended by the soil test. Lime shall be incorporated into the soil to a minimum depth of 100 mm or may be incorporated as part of the tillage operation.

3.2.2.3 Fertilizer

Fertilizer shall be applied at the rate recommended by the soil test. Fertilizer shall be incorporated into the soil to a minimum depth of 100 mm and may be incorporated as part of the tillage or hydroseeding operation.

3.2.2.4 Soil Conditioner

Soil Conditioner shall be spread uniformly over the soil to a minimum depth of 50 millimeters and thoroughly incorporated by tillage into the soil to a minimum depth of 100 mm.

3.2.3 Tillage

3.2.3.1 Minimum Depth

Soil on slopes gentler than 3-horizontal-to-1-vertical shall be tilled to a minimum depth of 100 mm. On slopes between 3-horizontal-to-1-vertical and 1-horizontal-to-1 vertical, the soil shall be tilled to a minimum depth of 50 mm by scarifying with heavy rakes, or other method. Rototillers shall be used where soil conditions and length of slope permit. On slopes 1-horizontal-to-1 vertical and steeper, no tillage is required.

3.2.4 Finished Grading

3.2.4.1 Preparation

Turf areas shall be filled as needed or have surplus soil removed to attain the finished grade. Drainage patterns shall be maintained as indicated on drawings. Turf areas compacted by construction operations shall be completely pulverized by tillage. Soil used for repair of erosion or grade deficiencies shall conform to topsoil requirements specified. Finished grade shall be 25 mm below the adjoining grade of any surfaced area. New surfaces shall be blended to existing areas.

3.2.4.2 Lawn Area Debris

Lawn areas shall have debris and stones larger than 25 mm in any dimension removed from the surface.

3.2.4.3 NOT USED

3.2.4.4 Protection

Finished graded areas shall be protected from damage by vehicular or pedestrian traffic and erosion.

3.3 SEEDING

3.3.1 General

Prior to seeding, any previously prepared seedbed areas compacted or damaged by interim rain, traffic or other cause, shall be reworked to restore the ground condition previously specified. Seeding operations shall not take place when the wind velocity will prevent uniform seed distribution.

3.3.2 Equipment Calibration

The equipment to be used and the methods of turfing shall be subject to the inspection and approval of the Contracting Officer prior to commencement of turfing operations. Immediately prior to the commencement of turfing operations, the Contractor shall conduct turfing equipment calibration tests in the presence of the Contracting Officer.

3.3.3 Applying Seed

3.3.3.1 Broadcast Seeding

Seed shall be uniformly broadcast at the rate of 330 kilograms per hectare using broadcast seeders. Half of seed shall be broadcast in one direction, and the remainder at right angles to the first direction. Seed shall be covered to an average depth of 5 mm by disk harrow, steel mat drag, cultipacker, or other approved device.

3.3.3.2 NOT USED

3.3.3.3 Rolling

Immediately after seeding, except for slopes 3-horizontal-to-1 vertical and greater, the entire area shall be firmed with a roller not exceeding 130 kg for each meter of roller width. Areas seeded with seed drills equipped with rollers shall not be rolled.

3.3.4 Hydroseeding

Seed and fertilizer shall be added to water and thoroughly mixed at the rates specified. Slurry shall be uniformly applied under pressure over the entire area. The hydroseeded area shall not be rolled.

3.3.5 Mulch

3.3.5.1 Straw or Hay Mulch

Straw or hay mulch shall be spread uniformly at the rate of 4.5 metric tons per hectare. Mulch shall be spread by hand, blower-type mulch spreader or other approved method. Mulching shall be started on the windward side of relatively flat areas or on the upper part of a steep slope and continued uniformly until the area is covered. The mulch shall not be bunched. All seeded areas shall be mulched on the same day as the seeding.

3.3.5.2 Mechanically Anchoring

Immediately following spreading, the mulch shall be anchored to the soil by a V-type-wheel land packer, a scalloped-disk land packer designed to force mulch into the soil surface, or other suitable equipment.

3.3.5.3 Asphalt Adhesive Tackifier

When asphalt adhesive is applied to the in-place mulch, spraying shall be at the rate of between 400 to 500 liters per hectare.

3.3.5.4 Non-Asphaltic Tackifier

Hydrophilic colloid shall be applied at rate recommended by manufacturer. Apply with hydraulic equipment suitable for mixing and applying uniform mixture of tackifier.

3.3.5.5 Spreading Asphalt Adhesive Coated Mulch

Straw or hay mulch shall be spread simultaneously with asphalt adhesive at the rate of 4.5 metric tons per hectare by using power mulch equipment which shall be equipped with suitable asphalt pump and nozzle. The adhesive-coated mulch shall be applied evenly over the surface. Sunlight shall not be completely excluded from penetration to the ground surface.

3.3.5.6 Wood Cellulose Fiber

Wood cellulose fiber mulch for use with the hydraulic application of seed and fertilizer shall be applied as part of the hydroseeding operation.

3.3.6 Water

Watering shall be started within 7 days after completing the seeded area. Water shall be applied at a rate sufficient to ensure moist soil conditions to a minimum depth of 25 mm. Run-off and puddling shall be prevented.

3.4 SODDING

3.4.1 General

Areas shall be sodded as indicated. Adequate soil moisture shall be ensured prior to sodding by spraying water on the area to be sodded and wetting the soil to a minimum depth of 25 mm.

3.4.2 Placing Sod

Rows of sod shall be placed parallel to and tightly against each other. Joints shall be staggered laterally. The sod strips shall not be stretched or overlapped. All joints shall be butted tight. Voids and air drying of roots shall be prevented. On long slopes, sod shall be laid at right angles to slopes. In ditches, sod shall be laid at right angles to the flow of water. When required, the sod shall be anchored by placing anchors a minimum distance of 600 mm on center with a minimum of 2 anchors per sod section.

3.4.3 Finishing

Air pockets shall be eliminated and a true and even surface shall be provided by tamping or rolling the sod in place. Displacement of the sod shall be assured by knitting of sod to the soil. Frayed edges shall be trimmed and holes or missing corners shall be patched in the sod.

3.4.4 Watering Sod

Watering shall be started immediately after completing each day of sodding. Water shall be applied at a rate sufficient to ensure moist soil conditions to a minimum depth of 25 mm. Run-off and puddling shall be prevented.

3.5 NOT USED

3.6 EROSION CONTROL

3.6.1 Erosion Control Material

Erosion control material, where indicated or required, shall be installed in accordance with manufacturer's instructions. Placement of the erosion control material shall be accomplished without damage to installed material or without deviation to finished grade.

3.6.2 Temporary Turf Cover

3.6.2.1 General

When there are contract delays in the turfing operation or a quick cover is required to prevent erosion, the areas designated for turf shall be seeded with a temporary seed as directed by the Contracting Officer.

3.6.2.2 Application

When no other turfing materials have been applied, the quantity of one half of the required soil amendments shall be applied and the area tilled in accordance with paragraph SITE PREPARATION. Seed shall be uniformly broadcast and applied at the rate of 220 kilograms per square meter. The area shall be watered as required.

3.7 APPLICATION OF PESTICIDE

When pesticide becomes necessary to remove a pest or disease, a state-certified applicator shall apply required pesticides in accordance with EPA label restrictions and recommendations. Hydraulic equipment shall be provided for the liquid application of pesticides with a leak-proof tank, positive agitation methods, controlled application pressure and metering gauges. A pesticide plan shall be provided to the Contracting Officer as stated in paragraph SUBMITTALS.

3.8 RESTORATION AND CLEAN UP

3.8.1 Restoration

Existing turf areas, pavements and facilities that have been damaged from the turfing operation shall be restored to original condition at Contractor's expense.

3.8.2 Clean Up

Excess and waste material shall be removed from the planting operation and shall be disposed of off the site. Adjacent paved areas shall be cleaned.

3.9 PROTECTION OF TURFED AREAS

Immediately after turfing, the area shall be protected against traffic or other use by erecting barricades and providing signage as required, or as directed by the Contracting Officer.

3.10 TURF ESTABLISHMENT PERIOD

3.10.1 Commencement

The Turf Establishment Period for establishing a healthy stand of turf shall begin on the first day of work under this contract and shall end three (3) months after the last day of turfing operations required by this contract. Written calendar time period shall be furnished to the Contracting Officer for the Turf Establishment Period. When there is more than one turf establishment period, describe the boundaries of the turfed area covered for each period.

3.10.2 Satisfactory Stand of Turf

3.10.2.1 Seeded Area

a. Lawn Area: A satisfactory stand of turf from the seeding operation for a lawn area is defined as a minimum of 160 grass plants per square meter. Bare spots shall be no larger than 150 mm square. The total bare spots shall not exceed 2 percent of the total seeded area.

3.10.2.2 Sodded Area

A satisfactory stand of turf from the sodding operation is defined as living sod uniform in color and leaf texture. Bare spots shall be no larger than 50 mm square.

3.10.3 Maintenance During Establishment Period

3.10.3.1 General

Maintenance of the turfed areas shall include eradicating weeds, eradicating insects and diseases, protecting embankments and ditches from erosion, maintaining erosion control materials and mulch, protecting turfed areas from traffic, mowing, watering, and post-fertilization.

3.10.3.2 Mowing

a. Lawn Areas: Lawn areas shall be mowed to a minimum height of 100 milimeters when the average height of the turf becomes 150 millimeters. Clippings shall be removed when the amount of cut turf is heavy enough to damage the turfed areas.

3.10.3.3 Watering

Watering shall be at intervals to obtain a moist soil condition to a minimum depth of 25 mm. Frequency of watering and quantity of water shall be adjusted in accordance with the growth of the turf. Run-off, puddling and wilting shall be prevented.

3.10.3.4 Post-Fertilization

Nitrogen carrier fertilizer shall be applied after the first month and again prior to the final acceptance. The application shall be timed prior to the advent of winter dormancy and shall avoid excessively high nitrogen levels.

3.10.3.5 Pesticide

Treatment for disease or pest shall be in accordance with paragraph APPLICATION OF PESTICIDE.

3.10.3.6 Repair

The Contractor shall re-establish as specified herein, eroded, damaged or barren areas. Mulch shall also be repaired or replaced as required.

3.10.3.7 Maintenance Report

A written record shall be furnished to the Contracting Officer of the maintenance work performed.

3.11 FINAL ACCEPTANCE

3.11.1 Preliminary Inspection

Prior to the completion of the Turf Establishment Period, a preliminary inspection shall be held by the Contracting Officer. Time for the inspection shall be established in writing. The acceptability of the turf in accordance with the Turf Establishment Period shall be determined. An unacceptable stand of turf shall be repaired as soon as turfing conditions permit.

3.11.2 Final Inspection

A final inspection shall be held by the Contracting Officer to determine that deficiencies noted in the preliminary inspection have been corrected. Time for the inspection shall be established in writing.

-- End of Section --

SECTION 03100

STRUCTURAL CONCRETE FORMWORK

PART 1 GENERAL

1.1 REFERENCES

The publications listed below form a part of this specification to the extent referenced. The publications are referred to in the text by basic designation only.

ACI INTERNATIONAL (ACI)

ACI 347R (1994) Guide to Formwork for Concrete

AMERICAN HARDBOARD ASSOCIATION (AHA)

AHA A135.4 (1995) Basic Hardboard

DEPARTMENT OF COMMERCE (DOC)

DOC PS 1 (1983) Construction and Industrial Plywood

1.2 NOT USED

1.3 DESIGN

Formwork shall be designed in accordance with methodology of ACI 347R for anticipated loads, lateral pressures, and stresses. Forms shall be capable of producing a surface which meets the requirements of the class of finish specified in Section 03300 CAST-IN-PLACE STRUCTURAL CONCRETE. Forms shall be capable of withstanding the pressures resulting from placement and vibration of concrete.

PART 2 PRODUCTS

2.1 FORM MATERIALS

2.1.1 Forms For Class A and Class B Finish

Forms for Class A and Class B finished surfaces shall be plywood panels conforming to DOC PS 1, Grade B-B concrete form panels, Class I or II. Other form materials or liners may be used provided the smoothness and appearance of concrete produced will be equivalent to that produced by the plywood concrete form panels.

2.1.2 Forms For Class C Finish

Forms for Class C finished surfaces shall be shiplap lumber; plywood conforming to DOC PS 1, Grade B-B concrete form panels, Class I or II; tempered concrete form hardboard conforming to AHA A135.4; other approved concrete form material; or steel, except that steel lining on wood sheathing shall not be used. Forms for round columns may have one vertical seam.

2.1.3 Forms For Class D Finish

Forms for Class D finished surfaces, except where concrete is placed against earth, shall be wood or steel or other approved concrete form material.

2.1.4 NOT USED

2.1.5 NOT USED

2.1.6 Form Ties

Form ties shall be factory-fabricated metal ties, shall be of the removable or internal disconnecting or snap-off type, and shall be of a design that will not permit form deflection and will not spall concrete upon removal. Solid backing shall be provided for each tie. Except where removable tie rods are used, ties shall not leave holes in the concrete surface less than 6 mm nor more than 25 mm deep and not more than 25 mm in diameter. Removable tie rods shall be not more than 38 mm in diameter.

2.1.7 Form Releasing Agents

Form releasing agents shall be commercial formulations that will not bond with, stain or adversely affect concrete surfaces. Agents shall not impair subsequent treatment of concrete surfaces depending upon bond or adhesion nor impede the wetting of surfaces to be cured with water or curing compounds.

PART 3 EXECUTION

3.1 INSTALLATION

3.1.1 Formwork

Forms shall be mortar tight, properly aligned and adequately supported to produce concrete surfaces meeting the surface requirements specified in Section 03300 CAST-IN-PLACE STRUCTURAL CONCRETE and conforming to construction tolerance given in TABLE 1. Where concrete surfaces are to have a Class A or Class B finish, joints in form panels shall be arranged as approved. Where forms for continuous surfaces are placed in successive units, care shall be taken to fit the forms over the completed surface so as to obtain accurate alignment of the surface and to prevent leakage of mortar. Forms shall not be reused if there is any evidence of surface wear and tear or defects which would impair the quality of the surface. Surfaces of forms to be reused shall be cleaned of mortar from previous concreting and of all other foreign material before reuse. Form ties that are to be completely withdrawn shall be coated with a nonstaining bond breaker.

3.2 CHAMFERING

Except as otherwise shown, external corners that will be exposed shall be chamfered, beveled, or rounded by moldings placed in the forms.

3.3 COATING

Forms for Class A and Class B finished surfaces shall be coated with a form releasing agent before the form or reinforcement is placed in final position. The coating shall be used as recommended in the manufacturer's

printed or written instructions. Forms for Class C and D finished surfaces may be wet with water in lieu of coating immediately before placing concrete, except that in cold weather with probable freezing temperatures coating shall be mandatory. Surplus coating on form surfaces and coating on reinforcing steel and construction joints shall be removed before placing concrete.

3.4 REMOVAL OF FORMS

Forms shall be removed in a manner that will prevent injury to the concrete and ensure the complete safety of the structure. Formwork for columns, walls, side of beams and other parts not supporting the weight of concrete may be removed when the concrete has attained sufficient strength to resist damage from the removal operation but not before at least 24 hours has elapsed since concrete placement. Supporting forms and shores shall not be removed from beams, floors and walls until the structural units are strong enough to carry their own weight and any other construction or natural loads. In no case will supporting forms or shores be removed before the concrete strength has reached 70 percent of design strengths as determined by field cured cylinders or other approved methods. This strength shall be demonstrated by job-cured test specimens, and by a structural analysis considering the proposed loads in relation to these test strengths and the strength of forming and shoring system. The job-cured test specimens for form removal purposes shall be provided in numbers as directed and shall be in addition to those required for concrete quality control. The specimens shall be removed from molds at the age of 24 hours and shall receive, insofar as possible, the same curing and protection as the structures they represent.

TABLE 1

TOLERANCES FOR FORMED SURFACES

1. Variations from the plumb:	In any 3 m of length ----- 6 mm
a. In the lines and surfaces of piers, walls and in arises	Maximum for entire length ----- 25 mm
b. For exposed corner columns, control-joint grooves, and other conspicuous lines	In any 6 m of length ----- 6 mm Maximum for entire length ---- 13 mm
2. Variation from the level or from the grades indicated on the drawings:	In any 3 m of length ----- 6 mm In any bay or in any 6 m of length ---------- 10 mm
a. In ceilings, and in arises, measured before removal of supporting shores	Maximum for entire length ---- 20 mm
b. In exposed lintels, sills, horizontal grooves, and other conspicuous lines	In any bay or in any 6 m of length ---------- 6 mm Maximum for entire length ---- 13 mm
3. Variation of the linear building lines from established position in plan	In any 6 m ---------- 13 mm Maximum ---------- 25 mm

TABLE 1

TOLERANCES FOR FORMED SURFACES

4.	Variation of distance between walls, partitions	6 mm per 3 m of distance, but not more than 13 mm in any one bay, and not more than 25 mm total variation
5.	Variation in the sizes and locations of sleeves, floor openings, and wall opening	Minus ---------- 6 mm Plus ---------- 13 mm
6.	Variation in the thickness of slabs and walls	Minus ---------- 6 mm Plus ---------- 13 mm
7.	Footings:	
a.	Variation of dimensions in plan when formed or plus 75 mm when placed against unformed excavation	Minus ---------- 13 mm Plus ---------- 50 mm
b.	Misplacement of eccentricity	2 percent of the footing width in the direction of misplacement but not more than ---------- 50 mm
c.	Reduction in thickness	Minus ---------- 5 percent of specified thickness

-- End of Section --

SECTION 03200

CONCRETE REINFORCEMENT

PART 1 GENERAL

1.1 REFERENCES

The publications listed below form a part of this specification to the extent referenced. The publications are referred to in the text by basic designation only.

ACI INTERNATIONAL (ACI)

ACI 318M	(1995) Building Code Requirements for Structural Concrete and Commentary (Metric)

AMERICAN SOCIETY FOR TESTING AND MATERIALS (ASTM)

ASTM A 53	(1996) Pipe, Steel, Black and Hot-Dipped, Zinc-Coated, Welded and Seamless
ASTM A 184/A 184M	(1996) Fabricated Deformed Steel Bar Mats for Concrete Reinforcement
ASTM A 185	(1994) Steel Welded Wire Fabric, Plain, for Concrete Reinforcement
ASTM A 615/A 615M	(1996a) Deformed and Plain Billet-Steel Bars for Concrete Reinforcement
ASTM A 675/A 675M	(1990a; R 1995) Steel Bars, Carbon, Hot-Wrought, Special Quality, Mechanical Properties
ASTM A 706/A 706M	(1995b) Low-Alloy Steel Deformed and Plain Bars for Concrete Reinforcement
ASTM A 767/A 767M	(1995) Zinc-Coated (Galvanized) Steel Bars in Concrete Reinforcement
ASTM A 775/A 775M	(1996) Epoxy-Coated Reinforcement Steel Bars
ASTM A 884/A 884M	(1996a) Epoxy-Coated Steel Wire and Welded Wire Fabric for Reinforcement

CONCRETE REINFORCING STEEL INSTITUTE (CRSI)

CRSI MSP-1	(1996) Manual of Standard Practice

1.2 SUBMITTALS

The following shall be submitted in accordance with Section 01300 SUBMITTAL PROCEDURES:

Drawings

Concrete Reinforcement System

Detail drawings showing reinforcing steel placement, schedules, sizes, grades, and splicing and bending details. Drawings shall show support details including types, sizes and spacing.

Certificates

Reinforcing Steel

Certified copies of mill reports attesting that the reinforcing steel furnished contains no less than 25 percent recycled scrap steel and meets the requirements specified herein, prior to the installation of reinforcing steel.

1.3 NOT USED

1.4 DELIVERY AND STORAGE

Reinforcement and accessories shall be stored off the ground on platforms, skids, or other supports.

PART 2 PRODUCTS

2.1 DOWELS

Dowels shall conform to ASTM A 675/A 675M, Grade 550. Steel pipe conforming to ASTM A 53, Schedule 80, may be used as dowels provided the ends are closed with metal or plastic inserts or with mortar.

2.2 FABRICATED BAR MATS

Fabricated bar mats shall conform to ASTM A 184/A 184M.

2.3 REINFORCING STEEL

Reinforcing steel shall be deformed bars conforming to ASTM A 615/A 615M or ASTM A 706/A 706M, grades and sizes as indicated. In highly corrosive environments or when directed by the Contracting Officer, reinforcing steel shall conform to ASTM A 767/A 767M or ASTM A 775/A 775M as appropriate.

2.4 WELDED WIRE FABRIC

Welded wire fabric shall conform to ASTM A 185. When directed by the Contracting Officer for special applications, welded wire fabric shall conform to ASTM A 884/A 884M.

2.5 WIRE TIES

Wire ties shall be 16 gauge or heavier black annealed steel wire.

2.6 SUPPORTS

Bar supports for formed surfaces shall be designed and fabricated in accordance with CRSI MSP-1 and shall be steel or precast concrete blocks. Precast concrete blocks shall have wire ties and shall be not less than 100

by 100 mm when supporting reinforcement on ground. Precast concrete block shall have compressive strength equal to that of the surrounding concrete. Where concrete formed surfaces will be exposed to weather or where surfaces are to be painted, steel supports within 13 mm of concrete surface shall be galvanized, plastic protected or of stainless steel. Concrete supports used in concrete exposed to view shall have the same color and texture as the finish surface. For slabs on grade, supports shall be precast concrete blocks, plastic coated steel fabricated with bearing plates, or specifically designed wire-fabric supports fabricated of plastic.

PART 3 EXECUTION

3.1 REINFORCEMENT

Reinforcement shall be fabricated to shapes and dimensions shown and shall conform to the requirements of ACI 318M . Reinforcement shall be cold bent unless otherwise authorized. Bending may be accomplished in the field or at the mill. Bars shall not be bent after embedment in concrete. Safety caps shall be placed on all exposed ends of vertical concrete reinforcement bars that pose a danger to life safety. Wire tie ends shall face away from the forms.

3.1.1 Placement

Reinforcement shall be free from loose rust and scale, dirt, oil, or other deleterious coating that could reduce bond with the concrete. Reinforcement shall be placed in accordance with ACI 318M at locations shown plus or minus one bar diameter. Reinforcement shall not be continuous through expansion joints and shall be as indicated through construction or contraction joints. Concrete coverage shall be as indicated or as required by ACI 318M . If bars are moved more than one bar diameter to avoid interference with other reinforcement, conduits or embedded items, the resulting arrangement of bars, including additional bars required to meet structural requirements, shall be approved before concrete is placed.

3.1.2 Splicing

Splices of reinforcement shall conform to ACI 318M and shall be made only as required or indicated. Splicing shall be by lapping or by mechanical connection; except that lap splices shall not be used for bars larger than No. 11 unless otherwise indicated. Lapped bars shall be placed in contact and securely tied or spaced transversely apart to permit the embedment of the entire surface of each bar in concrete. Lapped bars shall not be spaced farther apart than one-fifth the required length of lap or 150 mm. Mechanical butt splices shall be in accordance with the recommendation of the manufacturer of the mechanical splicing device. Butt splices shall develop 125 percent of the specified minimum yield tensile strength of the spliced bars or of the smaller bar in transition splices. Bars shall be flame dried before butt splicing. Adequate jigs and clamps or other devices shall be provided to support, align, and hold the longitudinal centerline of the bars to be butt spliced in a straight line.

3.2 WELDED-WIRE FABRIC PLACEMENT

Welded-wire fabric shall be placed in slabs as indicated. Fabric placed in slabs on grade shall be continuous between expansion, construction, and contraction joints. Fabric placement at joints shall be as indicated. Lap splices shall be made in such a way that the overlapped area equals the

distance between the outermost crosswires plus 50 mm. Laps shall be staggered to avoid continuous laps in either direction. Fabric shall be wired or clipped together at laps at intervals not to exceed 1.2 m. Fabric shall be positioned by the use of supports.

3.3 DOWEL INSTALLATION

Dowels shall be installed in slabs on grade at locations indicated and at right angles to joint being doweled. Dowels shall be accurately positioned and aligned parallel to the finished concrete surface before concrete placement. Dowels shall be rigidly supported during concrete placement. One end of dowels shall be coated with a bond breaker.

-- End of Section --

SECTION 03250

EXPANSION JOINTS, CONTRACTION JOINTS, AND WATERSTOPS

PART 1 GENERAL

1.1 REFERENCES

The publications listed below form a part of this specification to the extent referenced. The publications are referred to in the text by basic designation only.

AMERICAN HARDBOARD ASSOCIATION (AHA)

AHA A135.4	(1995) Basic Hardboard

AMERICAN SOCIETY FOR TESTING AND MATERIALS (ASTM)

ASTM D 471	(1995) Rubber Property - Effect of Liquids
ASTM D 1751	(1983; R 1991) Preformed Expansion Joint Filler for Concrete Paving and Structural Construction (Nonextruding and Resilient Bituminous Types)
ASTM D 1752	(1984; R 1992) Preformed Sponge Rubber and Cork Expansion Joint Fillers for Concrete Paving and Structural Construction
ASTM D 1854	(1974; R 1990) Specification for Jet-Fuel-Resistant Concrete Joint Sealer, Hot-Poured Elastic Type
ASTM D 1855	(1989) Test Method for Jet-Fuel Resistant Concrete Joint Sealer, Hot-Poured Elastic Type
ASTM D 5249	(1992) Backer Material for Use With Cold and Hot-Applied Joint Sealants in Portland-Cement Concrete and Asphalt Joints

CORPS OF ENGINEERS (COE)

COE CRD-C 513	(1974) Corps of Engineers Specifications for Rubber Waterstops
COE CRD-C 572	(1974) Corps of Engineers Specifications for Polyvinylchloride Waterstops

1.2 SUBMITTALS

The following shall be submitted in accordance with Section 01300 SUBMITTAL PROCEDURES:

Data

Preformed Expansion Joint Filler; Sealant; Waterstops.

Manufacturer's literature, including safety data sheets, for preformed fillers and the lubricants used in their installation; field-molded sealants and primers (when required by sealant manufacturer); preformed compression seals; and waterstops.

Instructions

Sealant; Waterstops

Manufacturer's recommended instructions for installing; and waterstops; and for splicing non-metallic waterstops.

SD-13 Certificates

Sealant; Waterstops

Certificates of compliance stating that the joint filler and sealant materials and waterstops conform to the requirements specified.

1.3 DELIVERY AND STORAGE

Material delivered and placed in storage shall be stored off the ground and protected from moisture, dirt, and other contaminants. Sealants shall be delivered in the manufacturer's original unopened containers. Sealants whose shelf life has expired shall be removed from the site.

PART 2 PRODUCTS

2.1 CONTRACTION JOINT STRIPS

Contraction joint strips shall be 3 mm thick tempered hardboard conforming to AHA A135.4, Class 1. In lieu of hardboard strips, rigid polyvinylchloride (PVC) or high impact polystyrene (HIPS) insert strips specifically designed to induce controlled cracking in slabs on grade may be used. Such insert strips shall have removable top section.

2.2 PREFORMED EXPANSION JOINT FILLER

Expansion joint filler shall be preformed material conforming to ASTM D 1751 or ASTM D 1752. Unless otherwise indicated, filler material shall be 13 mm thick and of a width applicable for the joint formed. Backer material, when required, shall conform to ASTM D 5249.

2.3 SEALANT

Joint sealant shall conform to the following:

2.3.1 NOT USED

2.3.2 NOT USED

2.3.3 NOT USED

2.3.4 NOT USED

2.3.5 Hot-Applied Jet-Fuel Resistant Type

ASTM D 1854 tested in accordance with ASTM D 1855.

2.4 WATERSTOPS

Intersection and change of direction waterstops shall be shop fabricated.

2.4.1 NOT USED

2.4.2 NOT USED

2.4.3 Non-Metallic

Non-metallic waterstops shall be manufactured from a prime virgin resin; reclaimed material is not acceptable. The compound shall contain plasticizers, stabilizers, and other additives to meet specified requirements. Rubber waterstops shall conform to COE CRD-C 513. Polyvinylchloride waterstops shall conform to COE CRD-C 572. Thermoplastic elastomeric rubber waterstops shall conform to ASTM D 471.

PART 3 EXECUTION

3.1 JOINTS

Joints shall be installed at locations indicated and as authorized.

3.1.1 Contraction Joints

Contraction joints may be constructed by inserting tempered hardboard strips or rigid PVC or HIPS insert strips into the plastic concrete using a steel parting bar, when necessary, or by cutting the concrete with a saw after concrete has set. Joints shall be approximately 3 mm wide and shall extend into the slab one-fourth the slab thickness, minimum, but not less than 25 mm.

3.1.1.1 Joint Strips

Strips shall be of the required dimensions and as long as practicable. After the first floating, the concrete shall be grooved with a tool at the joint locations. The strips shall be inserted in the groove and depressed until the top edge of the vertical surface is flush with the surface of the slab. The slab shall be floated and finished as specified. Working of the concrete adjacent to the joint shall be the minimum necessary to fill voids and consolidate the concrete. Where indicated, the top portion of the strip shall be sawed out after the curing period to form a recess for sealer. The removable section of PVC or HIPS strips shall be discarded and the insert left in place. Means shall be provided to insure true alignment of the strips is maintained during insertion.

3.1.1.2 Sawed Joints

Joint sawing shall be early enough to prevent uncontrolled cracking in the slab, but late enough that this can be accomplished without appreciable spalling. Concrete sawing machines shall be adequate in number and power, and with sufficient replacement blades to complete the sawing at the required rate. Joints shall be cut to true alignment and shall be cut in sequence of concrete placement. Sludge and cutting debris shall be removed.

3.1.2 Expansion Joints

Preformed expansion joint filler shall be used in expansion and isolation joints in slabs around columns and between slabs on grade and vertical surfaces where indicated. The filler shall extend the full slab depth, unless otherwise indicated. The edges of the joint shall be neatly finished with an edging tool of 3 mm radius, except where a resilient floor surface will be applied. Where the joint is to receive a sealant, the filler strips shall be installed at the proper level below the finished floor with a slightly tapered, dressed and oiled wood strip temporarily secured to the top thereof to form a recess to the size shown on the drawings. The wood strip shall be removed after the concrete has set. Contractor may opt to use a removable expansion filler cap designed and fabricated for this purpose in lieu of the wood strip. The groove shall be thoroughly cleaned of laitance, curing compound, foreign materials, protrusions of hardened concrete, and any dust which shall be blown out of the groove with oil-free compressed air.

3.1.3 Joint Sealant

Sawed contraction joints and expansion joints in slabs shall be filled with joint sealant, unless otherwise shown. Joint surfaces shall be clean, dry, and free of oil or other foreign material which would adversely affect the bond between sealant and concrete. Joint sealant shall be applied as recommended by the manufacturer of the sealant.

3.2 WATERSTOPS, INSTALLATION AND SPLICES

Waterstops shall be installed at the locations shown to form a continuous water-tight diaphragm. Adequate provision shall be made to support and completely protect the waterstops during the progress of the work. Any waterstop punctured or damaged shall be repaired or replaced. Exposed waterstops shall be protected during application of form release agents to avoid being coated. Suitable guards shall be provided to protect exposed projecting edges and ends of partially embedded waterstops from damage when concrete placement has been discontinued. Splices shall be made by certified trained personnel using approved equipment and procedures.

3.2.1 NOT USED

3.2.2 NOT USED

3.2.3 Non-Metallic

Fittings shall be shop made using a machine specifically designed to mechanically weld the waterstop. A miter guide, proper fixturing (profile dependant), and portable power saw shall be used to miter cut the ends to be joined to ensure good alignment and contact between joined surfaces. The splicing of straight lengths shall be done by squaring the ends to be joined. Continuity of the characteristic features of the cross section of the waterstop (ribs, tabular center axis, protrusions, etc.) shall be maintained across the splice.

3.2.3.1 Rubber Waterstop

Splices shall be vulcanized or shall be made using cold bond adhesive as recommended by the manufacturer. Splices for TPE-R shall be as specified for PVC.

3.2.3.2 Polyvinyl Chloride Waterstop

Splices shall be made by heat sealing the adjacent waterstop edges together using a thermoplastic splicing iron utilizing a non-stick surface specifically designed for waterstop welding. The correct temperature shall be used to sufficiently melt without charring the plastic. The spliced area, when cooled, shall show no signs of separation, holes, or other imperfections when bent by hand in as sharp an angle as possible.

3.2.3.3 Quality Assurance

Edge welding will not be permitted. Centerbulbs shall be compressed or closed when welding to non-centerbulb type. Waterstop splicing defects which are unacceptable include, but are not limited to the following: 1) Tensile strength less than 80 percent of parent section. 2) Free lap joints. 3) Misalignment of centerbulb, ribs, and end bulbs greater than 2 mm. 4) Misalignment which reduces waterstop cross section more than 15 percent. 5) Bond failure at joint deeper than 2 mm or 15 percent of material thickness. 6) Misalignment of waterstop splice resulting in misalignment of waterstop in excess of 13 mm in 3 m. 7) Visible porosity in the weld area, including pin holes. 8) Charred or burnt material. 9) Bubbles or inadequate bonding. 10) Visible signs of splice separation when cooled splice is bent by hand at a sharp angle.

3.3 CONSTRUCTION JOINTS

Construction joints are specified in Section 03300 CAST-IN-PLACE STRUCTURAL CONCRETE except that construction joints coinciding with expansion and contraction joints shall be treated as expansion or contraction joints as applicable.

-- End of Section --

SECTION 03300

CAST-IN-PLACE STRUCTURAL CONCRETE

PART 1 GENERAL

1.1 REFERENCES

The publications listed below form a part of this specification to the extent referenced. The publications are referred to in the text by basic designation only.

ACI INTERNATIONAL (ACI)

ACI 117/117R	(1990; Errata) Standard Tolerances for Concrete Construction and Materials
ACI 211.1	(1991) Standard Practice for Selecting Proportions for Normal, Heavyweight, and Mass Concrete
ACI 214.3R	(1988) Simplified Version of the Recommended Practice for Evaluation of Strength Test Results
ACI 305R	(1991) Hot Weather Concreting
ACI 318/318R	(1995) Building Code Requirements for Reinforced Concrete and Commentary

AMERICAN ASSOCIATION OF STATE HIGHWAY AND TRANSPORTATION OFFICIALS (AASHTO)

AASHTO M 182	(1991) Burlap Cloth Made From Jute or Kenaf

AMERICAN SOCIETY FOR TESTING AND MATERIALS (ASTM)

ASTM C 31	(1991) Making and Curing Concrete Test Specimens in the Field
ASTM C 33	(1993) Concrete Aggregates
ASTM C 39	(1994) Compressive Strength of Cylindrical Concrete Specimens
ASTM C 42	(1994) Obtaining and Testing Drilled Cores and Sawed Beams of Concrete
ASTM C 78	(1994) Flexural Strength of Concrete (Using Simple Beam With Third-Point Loading)
ASTM C 94	(1996) Ready-Mixed Concrete
ASTM C 136	(1995a) Sieve Analysis of Fine and Coarse Aggregates

ASTM C 143	(1990a) Slump of Hydraulic Cement Concrete
ASTM C 150	(1995) Portland Cement
ASTM C 171	(1995) Sheet Materials for Curing Concrete
ASTM C 172	(1990) Sampling Freshly Mixed Concrete
ASTM C 173	(1994a) Air Content of Freshly Mixed Concrete by the Volumetric Method
ASTM C 192	(1990a) Making and Curing Concrete Test Specimens in the Laboratory
ASTM C 231	(1991b) Air Content of Freshly Mixed Concrete by the Pressure Method
ASTM C 260	(1995) Air-Entraining Admixtures for Concrete
ASTM C 309	(1995) Liquid Membrane-Forming Compounds for Curing Concrete
ASTM C 494	(1992) Chemical Admixtures for Concrete
ASTM C 552	(1991) Cellular Glass Thermal Insulation
ASTM C 578	(1995) Rigid, Cellular Polystyrene Thermal Insulation
ASTM C 591	(1994) Unfaced Preformed Rigid Cellular Polyisocyanurate Thermal Insulation
ASTM C 618	(1996a) Coal Fly Ash and Raw or Calcined Natural Pozzolan for Use as a Mineral Admixture in Portland Cement Concrete
ASTM C 940	(1989) Expansion and Bleeding of Freshly Mixed Grouts for Preplaced-Aggregate Concrete in the Laboratory
ASTM C 989	(1994a) Ground Granulated Blast-Furnace Slag for Use in Concrete and Mortars
ASTM C 1017	(1992) Chemical Admixtures for Use in Producing Flowing Concrete
ASTM C 1064	(1986; R 1993) Temperature of Freshly Mixed Portland Cement Concrete
ASTM C 1077	(1995a) Laboratories Testing Concrete and Concrete Aggregates for Use in Construction and Criteria for Laboratory Evaluation
ASTM C 1107	(1991a) Packaged Dry, Hydraulic-Cement Grout (Nonshrink)
ASTM D 75	(1987; R 1992) Sampling Aggregates

ASTM D 1751	(1983; R 1991) Preformed Expansion Joint Filler for Concrete Paving and Structural Construction (Nonextruding and Resilient Bituminous Types)
ASTM E 96	(1995) Water Vapor Transmission of Materials

CORPS OF ENGINEERS (COE)

COE CRD-C 94	(1995) Surface Retarders
COE CRD-C 104	(1980) Method of Calculation of the Fineness Modulus of Aggregate
COE CRD-C 400	(1963) Requirements for Water for Use in Mixing or Curing Concrete
COE CRD-C 521	(1981) Standard Test Method for Frequency and Amplitude of Vibrators for Concrete
COE CRD-C 540	(1971; R 1981) Standard Specification for Nonbituminous Inserts for Contraction Joints in Portland Cement Concrete Airfield Pavements, Sawable Type
COE CRD-C 572	(1974) Corps of Engineers Specifications for Polyvinylchloride Waterstop

NATIONAL INSTITUTE OF STANDARDS AND TECHNOLOGY (NIST)

NIST HB 44	(1995) NIST Handbook 44: Specifications, Tolerances, and Other Technical Requirements for Weighing and Measuring Devices

NATIONAL READY-MIXED CONCRETE ASSOCIATION (NRMCA)

NRMCA TMMB-01	(1992) Truck Mixer Agitator and Front Discharge Concrete Carrier Standards of the Truck Mixer Manufacturers Bureau
NRMCA CPMB 100	(1990) Concrete Plant Standards
NRMCA QC 3	(1984) Quality Control Manual: Section 3, Plant Certifications Checklist: Certification of Ready Mixed Concrete Production Facilities

1.2 NOT USED

1.3 LUMP SUM CONTRACT

Under this type of contract concrete items will be paid for by lump sum and will not be measured. The work covered by these items consists of furnishing all concrete materials, reinforcement, miscellaneous embedded materials, and equipment, and performing all labor for the forming, manufacture, transporting, placing, finishing, curing, and protection of concrete in these structures.

1.4 SUBMITTALS

The following shall be submitted in accordance with Section 01300 SUBMITTAL PROCEDURES:

Statements

Mixture Proportions

The results of trial mixture design studies along with a statement giving the maximum nominal coarse aggregate size and the proportions of ingredients that will be used in the manufacture of each strength or class of concrete, at least 14 days prior to commencing concrete placing operations. Aggregate weights shall be based on the saturated surface dry condition. The statement shall be accompanied by test results from an approved independent commercial testing laboratory, showing that mixture design studies have been made with materials proposed for the project and that the proportions selected will produce concrete of the qualities indicated. No substitutions shall be made in the materials used in the mixture design studies without additional tests to show that the quality of the concrete is satisfactory.

Reports

Testing and Inspection for Contractor Quality Control; GA.

Certified copies of laboratory test reports, including mill tests and all other test data, for portland cement, blended cement, pozzolan, ground granulated blast furnace slag, silica fume, aggregate, admixtures, and curing compound proposed for use on this project.

Certificates

Qualifications

Written documentation for Contractor Quality Control personnel.

1.5 QUALIFICATIONS

Contractor Quality Control personnel assigned to concrete construction shall be American Concrete Institute (ACI) Certified Workmen in one of the following grades or shall have written evidence of having completed similar qualification programs:

Concrete Field Testing Technician, Grade I
Concrete Laboratory Testing Technician, Grade I or II
Concrete Construction Inspector, Level II

The foreman or lead journeyman of the flatwork finishing crew shall have similar qualification for ACI Concrete Flatwork Technician/Finisher or equal, with written documentation.

1.6 NOT USED

1.7 SPECIAL REQUIREMENTS

A pre-installation meeting with the Contracting Officer will be required at least 10 days prior to start of construction on slabs and arms vault. The

Contractor shall be responsible for calling the meeting; the Project Superintendent and active installation personnel shall be present.

1.8 GENERAL REQUIREMENTS

1.8.1 Tolerances

Except as otherwise specified herein, tolerances for concrete batching, mixture properties, and construction as well as definition of terms and application practices shall be in accordance with ACI 117/117R. Level and grade tolerance measurements of slabs shall be made as soon as possible after finishing; when forms or shoring are used, the measurements shall be made prior to removal.

1.8.1.1 Floors

For the purpose of this Section the following terminology correlation between ACI 117/117R and this Section shall apply:

Floor Profile Quality Classification From ACI 117/117R	This Section
Conventional Bullfloated	Same
Conventional Straightedged	Same
Flat	Float Finish or Trowel Finish
Very Flat	Same. Use only with F-system

Levelness tolerance shall not apply where design requires floors to be sloped to drains or sloped for other reasons.

1.8.1.2 NOT USED

1.8.1.3 Floors by the Straightedge System

The flatness of the floors shall be carefully controlled and the tolerances shall be measured by the straightedge system as specified in paragraph 4.5.7 of ACI 117/117R, using a 3 m straightedge, within 72 hours after floor slab installation and before shores and/or forms are removed. The listed tolerances shall be met at any and every location at which the straightedge can be placed.

Trowel Finish 5 mm

1.8.2 Strength Requirements and w/c Ratio

1.8.2.1 Strength Requirements

Specified compressive strength (f'c) shall be as follows:

COMPRESSIVE STRENGTH	STRUCTURE OR PORTION OF STRUCTURE
30 MPa at 28 days	All concrete

Concrete slabs on-grade shall have a 28-day flexural strength of 4.0 MPa. Concrete made with high-early strength cement shall have a 7-day strength equal to the specified 28-day strength for concrete made with Type I or II portland cement. Compressive strength shall be determined in accordance with ASTM C 39. Flexural strength shall be determined in accordance with

ASTM C 78.

a. Evaluation of Concrete Compressive Strength. Compressive strength specimens (152 by 305 mm cylinders) shall be fabricated by the Contractor and laboratory cured in accordance with ASTM C 31 and tested in accordance with ASTM C 39. The strength of the concrete will be considered satisfactory so long as the average of all sets of three consecutive test results equals or exceeds the specified compressive strength f'c and no individual test result falls below the specified strength f'c by more than 3.5 MPa. A "test" is defined as the average of two companion cylinders, or if only one cylinder is tested, the results of the single cylinder test. Additional analysis or testing, including taking cores and/or load tests may be required at the Contractor's expense when the strength of the concrete in the structure is considered potentially deficient.

b. Investigation of Low-Strength Compressive Test Results. When any strength test of standard-cured test cylinders falls below the specified strength requirement by more than 3.5 MPa or if tests of field-cured cylinders indicate deficiencies in protection and curing, steps shall be taken to assure that the load-carrying capacity of the structure is not jeopardized. When the strength of concrete in place is considered potentially deficient, cores shall be obtained and tested in accordance with ASTM C 42. At least three representative cores shall be taken from each member or area of concrete in place that is considered potentially deficient. The location of cores will be determined by the Contracting Officer to least impair the strength of the structure. Concrete in the area represented by the core testing will be considered adequate if the average strength of the cores is equal to at least 85 percent of the specified strength requirement and if no single core is less than 75 percent of the specified strength requirement. Non-destructive tests (tests other than test cylinders or cores) shall not be used as a basis for acceptance or rejection. The Contractor shall perform the coring and repair the holes. Cores will be tested by the Government.

c. Load Tests. If the core tests are inconclusive or impractical to obtain or if structural analysis does not confirm the safety of the structure, load tests may be directed by the Contracting Officer in accordance with the requirements of ACI 318/318R. Concrete work evaluated by structural analysis or by results of a load test as being understrength shall be corrected in a manner satisfactory to the Contracting Officer. All investigations, testing, load tests, and correction of deficiencies shall be performed by and at the expense of the Contractor and must be approved by the Contracting Officer, except that if all concrete is found to be in compliance with the drawings and specifications, the cost of investigations, testing, and load tests will be at the expense of the Government.

d. Evaluation of Concrete Flexural Strength. Flexural strength specimens (beams) shall be fabricated by the Contractor and laboratory cured in accordance with ASTM C 31 and tested in accordance with ASTM C 78. The strength of the concrete will be considered satisfactory so long as the average of all sets of three consecutive test results equals or exceeds the specified flexural strength and no individual test result falls below the specified flexural strength by more than 350 kPa. A "test" is defined as the

average of two companion beams. Additional analysis or testing, including taking cores and/or load tests may be required at the Contractor's expense when the strength of the concrete in the slab is considered potentially deficient.

1.8.2.2 Water-Cement Ratio

Maximum water-cement ratio (w/c) for normal weight concrete shall be as follows:

WATER-CEMENT RATIO, BY WEIGHT	STRUCTURE OR PORTION OF STRUCTURE
0.45	All concrete

These w/c's may cause higher strengths than that required above for compressive or flexural strength. The maximum w/c required will be the equivalent w/c as determined by conversion from the weight ratio of water to cement plus pozzolan, and ground granulated blast furnace slag (GGBF slag) by the weight equivalency method as described in ACI 211.1. In the case where GGBF slag is used, the weight of the GGBF slag shall be included in the equations of ACI 211.1 for the term P which is used to denote the weight of pozzolan.

1.8.3 Air Entrainment

All normal weight concrete shall be air entrained to contain between 4 and 7 percent total air, except that when the nominal maximum size coarse aggregate is 19 mm or smaller it shall be between 4.5 and 7.5 percent. Specified air content shall be attained at point of placement into the forms. Air content for normal weight concrete shall be determined in accordance with ASTM C 231.

1.8.4 Slump

Slump of the concrete, as delivered to the point of placement into the forms, shall be within the following limits. Slump shall be determined in accordance with ASTM C 143.

Structural Element	Slump Minimum	Slump Maximum
Walls	50 mm	100 mm
Foundation walls, footings, slabs	25 mm	75 mm
Any structural concrete approved for placement by pumping:		
At pump	50 mm	150 mm
At discharge of line	25 mm	100 mm

When use of a plasticizing admixture conforming to ASTM C 1017 or when a Type F or G high range water reducing admixture conforming to ASTM C 494 is permitted to increase the slump of concrete, concrete shall have a slump of 50 to 100 mm before the admixture is added and a maximum slump of 200 mm at the point of delivery after the admixture is added.

1.8.5 Concrete Temperature

The temperature of the concrete as delivered shall not exceed 32 degrees C. When the ambient temperature during placing is 5 degrees C or less, or is expected to be at any time within 6 hours after placing, the temperature of the concrete as delivered shall be between 12 and 25 degrees C.

1.8.6 Size of Coarse Aggregate

The largest feasible nominal maximum size aggregate (NMSA) specified in paragraph AGGREGATES shall be used in each placement. However, nominal maximum size of aggregate shall not exceed any of the following: three-fourths of the minimum cover for reinforcing bars, three-fourths of the minimum clear spacing between reinforcing bars, one-fifth of the narrowest dimension between sides of forms, or one-third of the thickness of slabs or toppings.

1.8.7 Special Properties and Products

Concrete may contain admixtures other than air entraining agents, such as water reducers, superplasticizers, or set retarding agents to provide special properties to the concrete, if specified or approved. Any of these materials to be used on the project shall be used in the mix design studies.

1.9 MIXTURE PROPORTIONS

Concrete shall be composed of portland cement, other cementitious and pozzolanic materials as specified, aggregates, water and admixtures as specified.

1.9.1 Proportioning Studies for Normal Weight Concrete

Trial design batches, mixture proportioning studies, and testing requirements for various classes and types of concrete specified shall be the responsibility of the Contractor. Except as specified for flexural strength concrete, mixture proportions shall be based on compressive strength as determined by test specimens fabricated in accordance with ASTM C 192 and tested in accordance with ASTM C 39. Samples of all materials used in mixture proportioning studies shall be representative of those proposed for use in the project and shall be accompanied by the manufacturer's or producer's test reports indicating compliance with these specifications. Trial mixtures having proportions, consistencies, and air content suitable for the work shall be made based on methodology described in ACI 211.1, using at least three different water-cement ratios for each type of mixture, which will produce a range of strength encompassing those required for each class and type of concrete required on the project. The maximum water-cement ratios required in the paragraph Maximum Allowable w/c Ratio will be the equivalent water-cement ratio as determined by conversion from the weight ratio of water to cement plus pozzolan and ground granulated blast furnace slag (GGBF slag) by the weight equivalency method as described in ACI 211.1. In the case where GGBF slag is used, the weight of the GGBF slag shall be included in the equations in ACI 211.1 for the term P, which is used to denote the weight of pozzolan. If pozzolan is used in the concrete mixture, the minimum pozzolan content shall be 15 percent by weight of the total cementitious material, and the maximum shall be 35 percent. Laboratory trial mixtures shall be designed for maximum permitted slump and air content. Separate sets of trial mixture studies shall be made for each combination of cementitious materials and each combination of admixtures proposed for use. No combination of either shall be used until proven by such studies, except that, if approved in writing

and otherwise permitted by these specifications, an accelerator or a retarder may be used without separate trial mixture study. Separate trial mixture studies shall also be made for concrete for any conveying or placing method proposed which requires special properties and for concrete to be placed in unusually difficult placing locations. The temperature of concrete in each trial batch shall be reported. For each water-cement ratio, at least three test cylinders for each test age shall be made and cured in accordance with ASTM C 192. They shall be tested at 7 and 28 days in accordance with ASTM C 39. From these test results, a curve shall be plotted showing the relationship between water-cement ratio and strength for each set of trial mix studies. In addition, a curve shall be plotted showing the relationship between 7 day and 28 day strengths. Each mixture shall be designed to promote easy and suitable concrete placement, consolidation and finishing, and to prevent segregation and excessive bleeding.

1.9.2 Proportioning Studies for Flexural Strength Concrete

Trial design batches, mixture proportioning studies, and testing requirements shall conform to the requirements specified in paragraph Proportioning Studies for Normal Weight Concrete, except that proportions shall be based on flexural strength as determined by test specimens (beams) fabricated in accordance with ASTM C 192 and tested in accordance with ASTM C 78. Procedures given in ACI 211.1 shall be modified as necessary to accommodate flexural strength.

1.9.3 NOT USED

1.9.4 Average Compressive Strength Required for Mixtures

The mixture proportions selected during mixture design studies shall produce a required average compressive strength (f'cr) exceeding the specified compressive strength (f'c) by the amount indicated below. This required average compressive strength, f'cr, will not be a required acceptance criteria during concrete production. However, whenever the daily average compressive strength at 28 days drops below f'cr during concrete production, or daily average 7-day strength drops below a strength correlated with the 28-day f'cr, the mixture shall be adjusted, as approved, to bring the daily average back up to f'cr. During production, the required f'cr shall be adjusted, as appropriate, based on the standard deviation being attained on the job.

1.9.4.1 Computations from Test Records

Where a concrete production facility has test records, a standard deviation shall be established in accordance with the applicable provisions of ACI 214.3R. Test records from which a standard deviation is calculated shall represent materials, quality control procedures, and conditions similar to those expected; shall represent concrete produced to meet a specified strength or strengths (f'c) within 7 MPa of that specified for proposed work; and shall consist of at least 30 consecutive tests. A strength test shall be the average of the strengths of two cylinders made from the same sample of concrete and tested at 28 days. Required average compressive strength f'cr used as the basis for selection of concrete proportions shall be the larger of the equations that follow using the standard deviation as determined above:

$f'cr = f'c + 1.34S$ where units are in MPa

f'cr = f'c + 2.33S - 3.45 where units are in MPa

Where S = standard deviation

Where a concrete production facility does not have test records meeting the requirements above but does have a record based on 15 to 29 consecutive tests, a standard deviation shall be established as the product of the calculated standard deviation and a modification factor from the following table:

NUMBER OF TESTS	MODIFICATION FACTOR FOR STANDARD DEVIATION
15	1.16
20	1.08
25	1.03
30 or more	1.00

1.9.4.2 Computations without Previous Test Records

When a concrete production facility does not have sufficient field strength test records for calculation of the standard deviation, the required average strength f'cr shall be determined as follows:

f'cr = f'c + 8.3 MPa

1.9.5 Average Flexural Strength Required for Mixtures

The mixture proportions selected during mixture design studies for flexural strength mixtures and the mixture used during concrete production shall be designed and adjusted during concrete production as approved, except that the overdesign for average flexural strength shall simply be 15 percent greater than the specified flexural strength at all times.

1.10 STORAGE OF MATERIALS

Cement and other cementitious materials shall be stored in weathertight buildings, bins, or silos which will exclude moisture and contaminants and keep each material completely separated. Aggregate stockpiles shall be arranged and used in a manner to avoid excessive segregation and to prevent contamination with other materials or with other sizes of aggregates. Aggregate shall not be stored directly on ground unless a sacrificial layer is left undisturbed. Reinforcing bars and accessories shall be stored above the ground on platforms, skids or other supports. Other materials shall be stored in such a manner as to avoid contamination and deterioration. Admixtures which have been in storage at the project site for longer than 6 months or which have been subjected to freezing shall not be used unless retested and proven to meet the specified requirements. Materials shall be capable of being accurately identified after bundles or containers are opened.

1.11 GOVERNMENT ASSURANCE INSPECTION AND TESTING

Day-to day inspection and testing shall be the responsibility of the Contractor Quality Control (CQC) staff. However, representatives of the Contracting Officer can and will inspect construction as considered appropriate and will monitor operations of the Contractor's CQC staff. Government inspection or testing will not relieve the Contractor of any of his CQC responsibilities.

1.11.1 Materials

The Government will sample and test aggregates, cementitious materials, other materials, and concrete to determine compliance with the specifications as considered appropriate. The Contractor shall provide facilities and labor as may be necessary for procurement of representative test samples. Samples of aggregates will be obtained at the point of batching in accordance with ASTM D 75. Other materials will be sampled from storage at the jobsite or from other locations as considered appropriate. Samples may be placed in storage for later testing when appropriate.

1.11.2 Fresh Concrete

Fresh concrete will be sampled as delivered in accordance with ASTM C 172 and tested in accordance with these specifications, as considered necessary.

1.11.3 Hardened Concrete

Tests on hardened concrete will be performed by the Government when such tests are considered necessary.

1.11.4 Inspection

Concrete operations may be tested and inspected by the Government as the project progresses. Failure to detect defective work or material will not prevent rejection later when a defect is discovered nor will it obligate the Government for final acceptance.

PART 2 PRODUCTS

2.1 CEMENTITIOUS MATERIALS

Cementitious Materials shall be portland cement or portland cement in combination with pozzolan or ground granulated blast furnace slag and shall conform to appropriate specifications listed below. Use of cementitious materials in concrete which will have surfaces exposed in the completed structure shall be restricted so there is no change in color, source, or type of cementitious material.

2.1.1 Portland Cement

ASTM C 150, Type I with a maximum 15 percent amount of tricalcium aluminate, or Type II.

2.1.2 NOT USED

2.1.3 NOT USED

2.1.4 Pozzolan (Fly Ash)

ASTM C 618, Class C with the optional requirements for multiple factor, drying shrinkage, and uniformity from Table 2A of ASTM C 618. If pozzolan is used, it shall never be less than 15 percent nor more than 25 percent by weight of the total cementitious material.

2.1.5 Ground Granulated Blast-Furnace (GGBF) Slag

ASTM C 989, Grade 120.

2.2 AGGREGATES

Aggregates shall conform to the following.

2.2.1 Fine Aggregate

Fine aggregate shall conform to the quality and gradation requirements of ASTM C 33.

2.2.2 Coarse Aggregate

Coarse aggregate shall conform to ASTM C 33, Class 5S, size designation 67.

2.3 CHEMICAL ADMIXTURES

Chemical admixtures, when required or permitted, shall conform to the appropriate specification listed. Admixtures shall be furnished in liquid form and of suitable concentration for easy, accurate control of dispensing.

2.3.1 Air-Entraining Admixture

ASTM C 260 and shall consistently entrain the air content in the specified ranges under field conditions.

2.3.2 Accelerating Admixture

ASTM C 494, Type C or E, except that calcium chloride or admixtures containing calcium chloride shall not be used.

2.3.3 Water-Reducing or Retarding Admixture

ASTM C 494, Type A, B, or D, except that the 6-month and 1-year compressive and flexural strength tests are waived.

2.3.4 High-Range Water Reducer

ASTM C 494, Type F or G, except that the 6-month and 1-year strength requirements are waived. The admixture shall be used only when approved in writing, such approval being contingent upon particular mixture control as described in the Contractor's Quality Control Plan and upon performance of separate mixture design studies.

2.3.5 Surface Retarder

COE CRD-C 94.

2.3.6 NOT USED

2.3.7 Other Chemical Admixtures

Chemical admixtures for use in producing flowing concrete shall comply with ASTM C 1017, Type I or II. These admixtures shall be used only when approved in writing, such approval being contingent upon particular mixture control as described in the Contractor's Quality Control Plan and upon performance of separate mixture design studies.

2.4 CURING MATERIALS

2.4.1 Impervious-Sheet

Impervious-sheet materials shall conform to ASTM C 171, type optional, except, that polyethylene sheet shall not be used.

2.4.2 Membrane-Forming Compound

Membrane-Forming curing compound shall conform to ASTM C 309, Type 1-D or 2, except that only a styrene acrylate or chlorinated rubber compound meeting Class B requirements shall be used for surfaces that are to be painted or are to receive bituminous roofing, or waterproofing, or floors that are to receive adhesive applications of resilient flooring. The curing compound selected shall be compatible with any subsequent paint, or flooring specified. Nonpigmented compound shall contain a fugitive dye, and shall have the reflective requirements in ASTM C 309 waived.

2.4.3 Burlap and Cotton Mat

Burlap and cotton mat used for curing shall conform to AASHTO M 182.

2.5 WATER

Water for mixing and curing shall be fresh, clean, potable, and free of injurious amounts of oil, acid, salt, or alkali, except that non-potable water may be used if it meets the requirements of COE CRD-C 400.

2.6 NONSHRINK GROUT

Nonshrink grout shall conform to ASTM C 1107, Grade A and shall be a commercial formulation suitable for the proposed application.

2.7 NOT USED

2.8 NOT USED

2.9 NOT USED

2.10 EMBEDDED ITEMS

Embedded items shall be of the size and type indicated or as needed for the application.

2.11 FLOOR HARDENER

Floor hardener shall be a colorless aqueous solution containing zinc silicofluoride, magnesium silicofluoride, or sodium silicofluoride. These silicofluorides can be used individually or in combination. Proprietary hardeners may be used if approved in writing by the Contracting Officer.

2.12 PERIMETER INSULATION

Perimeter insulation shall be polystyrene conforming to ASTM C 578, Type II; polyurethane conforming to ASTM C 591, Type II; or cellular glass conforming to ASTM C 552, Type I or IV.

2.13 VAPOR BARRIER

Vapor barrier shall be polyethylene sheeting with a minimum thickness of

0.15 mm or other equivalent material having a vapor permeance rating not exceeding 30 nanograms per Pascal per second per square meter (0.5 perms) as determined in accordance with ASTM E 96.

2.14 JOINT MATERIALS

2.14.1 Joint Fillers, Sealers, and Waterstops

Expansion joint fillers shall be preformed materials conforming to ASTM D 1751. Materials for waterstops shall be in accordance with Section 03250 EXPANSION JOINTS, CONTRACTION JOINTS, AND WATERSTOPS. Materials for and sealing of joints shall conform to the requirements of Section 07920 JOINT SEALING.

2.14.2 Contraction Joints in Slabs

Sawable type contraction joint inserts shall conform to COE CRD-C 540. Nonsawable joint inserts shall have sufficient stiffness to permit placement in plastic concrete without undue deviation from a straight line and shall conform to the physical requirements of COE CRD-C 540, with the exception of Section 3.4 "Resistance to Sawing". Plastic inserts shall be polyvinyl chloride conforming to the materials requirements of COE CRD-C 572.

PART 3 EXECUTION

3.1 PREPARATION FOR PLACING

Before commencing concrete placement, the following shall be performed. Surfaces to receive concrete shall be clean and free from frost, ice, mud, and water. Forms shall be in place, cleaned, coated, and adequately supported, in accordance with Section 03100 STRUCTURAL CONCRETE FORMWORK. Reinforcing steel shall be in place, cleaned, tied, and adequately supported, in accordance with Section 03200 CONCRETE REINFORCEMENT. Transporting and conveying equipment shall be in-place, ready for use, clean, and free of hardened concrete and foreign material. Equipment for consolidating concrete shall be at the placing site and in proper working order. Equipment and material for curing and for protecting concrete from weather or mechanical damage shall be at the placing site, in proper working condition and in sufficient amount for the entire placement. When hot, windy conditions during concreting appear probable, equipment and material shall be at the placing site to provide windbreaks, shading, fogging, or other action to prevent plastic shrinkage cracking or other damaging drying of the concrete.

3.1.1 Foundations

3.1.1.1 Concrete on Earth Foundations

Earth (subgrade, base, or subbase courses) surfaces upon which concrete is to be placed shall be clean, damp, and free from debris, frost, ice, and standing or running water. Prior to placement of concrete, the foundation shall be well drained and shall be satisfactorily graded and uniformly compacted.

3.1.1.2 NOT USED

3.1.1.3 Excavated Surfaces in Lieu of Forms

Concrete for footings may be placed directly against the soil provided the

earth or rock has been carefully trimmed, is uniform and stable, and meets the compaction requirements of Section 02221EXCAVATION, FILLING, AND BACKFILLING FOR BUILDINGS. The concrete shall be placed without becoming contaminated by loose material, and the outline of the concrete shall be within the specified tolerances.

3.1.2 NOT USED

3.1.3 Vapor Barrier

Vapor barrier shall be provided beneath the interior on-grade concrete floor slabs. The greatest widths and lengths practicable shall be used to eliminate joints wherever possible. Joints shall be lapped a minimum of 300 mm. Torn, punctured, or damaged vapor barrier material shall be removed and new vapor barrier shall be provided prior to placing concrete. For minor repairs, patches may be made using laps of at least 300 mm. Lapped joints shall be sealed and edges patched with pressure-sensitive adhesive or tape not less than 50 mm wide and compatible with the membrane. Vapor barrier shall be placed directly on underlying subgrade, base course, or capillary water barrier, unless it consists of crushed material or large granular material which could puncture the vapor barrier. In this case, the surface shall be choked with a light layer of sand, as approved, before placing the vapor barrier. Concrete placement shall be controlled so as to prevent damage to the vapor barrier, or any covering sand.

3.1.4 Perimeter Insulation

Perimeter insulation shall be installed at locations indicated. Adhesive shall be used where insulation is applied to the interior surface of foundation walls and may be used for exterior application.

3.1.5 Embedded Items

Before placement of concrete, care shall be taken to determine that all embedded items are firmly and securely fastened in place as indicated on the drawings, or required. Conduit and other embedded items shall be clean and free of oil and other foreign matter such as loose coatings or rust, paint, and scale. The embedding of wood in concrete will be permitted only when specifically authorized or directed. Voids in sleeves, inserts, and anchor slots shall be filled temporarily with readily removable materials to prevent the entry of concrete into voids. Welding shall not be performed on embedded metals within 300 mm of the surface of the concrete. Tack welding shall not be performed on or to embedded items.

3.2 CONCRETE PRODUCTION

3.2.1 Batching, Mixing, and Transporting Concrete

Concrete shall be furnished from a ready-mixed concrete plant. Ready-mixed concrete shall be batched, mixed, and transported in accordance with ASTM C 94, except as otherwise specified. Truck mixers, agitators, and nonagitating transporting units shall comply with NRMCA TMMB-01. Ready-mix plant equipment and facilities shall be certified in accordance with NRMCA QC 3. Approved batch tickets shall be furnished for each load of ready-mixed concrete.

3.2.1.1 General

The batching plant shall be located off site close to the project. The

batching plant shall conform to the requirements of NRMCA CPMB 100 and as specified; however, rating plates attached to batch plant equipment are not required.

3.2.1.2 Batching Equipment

The batching controls shall be semiautomatic or automatic, as defined in NRMCA CPMB 100. A semiautomatic batching system shall be provided with interlocks such that the discharge device cannot be actuated until the indicated material is within the applicable tolerance. The batching system shall be equipped with accurate recorder or recorders that meet the requirements of NRMCA CPMB 100. The weight of water and admixtures shall be recorded if batched by weight. Separate bins or compartments shall be provided for each size group of aggregate and type of cementitious material, to prevent intermingling at any time. Aggregates shall be weighed either in separate weigh batchers with individual scales or, provided the smallest size is batched first, cumulatively in one weigh batcher on one scale. Aggregate shall not be weighed in the same batcher with cementitious material. If both portland cement and other cementitious material are used, they may be batched cumulatively, provided that the portland cement is batched first. Water may be measured by weight or volume. Water shall not be weighed or measured cumulatively with another ingredient. Filling and discharging valves for the water metering or batching system shall be so interlocked that the discharge valve cannot be opened before the filling valve is fully closed. Piping for water and for admixtures shall be free from leaks and shall be properly valved to prevent backflow or siphoning. Admixtures shall be furnished as a liquid of suitable concentration for easy control of dispensing. An adjustable, accurate, mechanical device for measuring and dispensing each admixture shall be provided. Each admixture dispenser shall be interlocked with the batching and discharging operation of the water so that each admixture is separately batched and individually discharged automatically in a manner to obtain uniform distribution throughout the water as it is added to the batch in the specified mixing period. Different admixtures shall not be combined prior to introduction in water and shall not be allowed to intermingle until in contact with the cement. Admixture dispensers shall have suitable devices to detect and indicate flow during dispensing or have a means for visual observation. The plant shall be arranged so as to facilitate the inspection of all operations at all times. Suitable facilities shall be provided for obtaining representative samples of aggregates from each bin or compartment, and for sampling and calibrating the dispensing of cementitious material, water, and admixtures. Filling ports for cementitious materials bins or silos shall be clearly marked with a permanent sign stating the contents.

3.2.1.3 Scales

The weighing equipment shall conform to the applicable requirements of CPMB Concrete Plant Standard, and of NIST HB 44, except that the accuracy shall be plus or minus 0.2 percent of scale capacity. The Contractor shall provide standard test weights and any other auxiliary equipment required for checking the operating performance of each scale or other measuring devices. The tests shall be made at the specified frequency in the presence of a Government inspector. The weighing equipment shall be arranged so that the plant operator can conveniently observe all dials or indicators.

3.2.1.4 Batching Tolerances

(A) Tolerances with Weighing Equipment

MATERIAL	PERCENT OF REQUIRED WEIGHT
Cementitious materials	0 to plus 2
Aggregate	plus or minus 2
Water	plus or minus 1
Chemical admixture	0 to plus 6

(B) Tolerances with Volumetric Equipment

For volumetric batching equipment used for water and admixtures, the following tolerances shall apply to the required volume of material being batched:

MATERIAL	PERCENT OF REQUIRED MATERIAL
Water:	plus or minus 1 percent
Chemical admixtures:	0 to plus 6 percent

3.2.1.5 Moisture Control

The plant shall be capable of ready adjustment to compensate for the varying moisture content of the aggregates and to change the weights of the materials being batched.

3.2.1.6 Concrete Mixers

Mixers shall be stationary mixers. Mixers shall be capable of combining the materials into a uniform mixture and of discharging this mixture without segregation. The mixers shall not be charged in excess of the capacity recommended by the manufacturer. The mixers shall be operated at the drum or mixing blade speed designated by the manufacturer. The mixers shall be maintained in satisfactory operating condition, and the mixer drums shall be kept free of hardened concrete. Should any mixer at any time produce unsatisfactory results, its use shall be promptly discontinued until it is repaired.

3.2.1.7 Stationary Mixers

Concrete plant mixers shall be drum-type mixers of tilting, nontilting, horizontal-shaft, or vertical-shaft type, or shall be pug mill type and shall be provided with an acceptable device to lock the discharge mechanism until the required mixing time has elapsed. The mixing time and uniformity shall conform to all the requirements in ASTM C 94 applicable to central-mixed concrete.

3.3 NOT USED

3.4 NOT USED

3.5 NOT USED

3.6 TRANSPORTING CONCRETE TO PROJECT SITE

Concrete shall be transported to the placing site in agitators, or by approved pumping equipment or conveyors.

3.7 CONVEYING CONCRETE ON SITE

Concrete shall be conveyed from mixer or transporting unit to forms as rapidly as possible and within the time interval specified by methods which will prevent segregation or loss of ingredients using following equipment. Conveying equipment shall be cleaned before each placement.

3.7.1 Buckets

The interior hopper slope shall be not less than 58 degrees from the horizontal, the minimum dimension of the clear gate opening shall be at least 5 times the nominal maximum-size aggregate, and the area of the gate opening shall not be less than 0.2 square meters. The maximum dimension of the gate opening shall not be greater than twice the minimum dimension. The bucket gates shall be essentially grout tight when closed and may be manually, pneumatically, or hydraulically operated except that buckets larger than 1.5 cubic meters shall not be manually operated. The design of the bucket shall provide means for positive regulation of the amount and rate of deposit of concrete in each dumping position.

3.7.2 Transfer Hoppers

Concrete may be charged into nonagitating hoppers for transfer to other conveying devices. Transfer hoppers shall be capable of receiving concrete directly from delivery vehicles and shall have conical-shaped discharge features. The transfer hopper shall be equipped with a hydraulically operated gate and with a means of external vibration to effect complete discharge. Concrete shall not be held in nonagitating transfer hoppers more than 30 minutes.

3.7.3 Trucks

Truck mixers operating at agitating speed or truck agitators used for transporting plant-mixed concrete shall conform to the requirements of ASTM C 94. Nonagitating equipment shall be used only for transporting plant-mixed concrete over a smooth road and when the hauling time is less than 15 minutes. Bodies of nonagitating equipment shall be smooth, watertight, metal containers specifically designed to transport concrete, shaped with rounded corners to minimize segregation, and equipped with gates that will permit positive control of the discharge of the concrete.

3.7.4 Chutes

When concrete can be placed directly from a truck mixer, agitator, or nonagitating equipment, the chutes normally attached to this equipment by the manufacturer may be used. A discharge deflector shall be used when required by the Contracting Officer. Separate chutes and other similar equipment will not be permitted for conveying concrete.

3.7.5 Belt Conveyors

Belt conveyors shall be designed and operated to assure a uniform flow of concrete from mixer to final place of deposit without segregation of ingredients or loss of mortar and shall be provided with positive means, such as discharge baffle or hopper , for preventing segregation of the concrete at the transfer points and the point of placing. Belt conveyors shall be constructed such that the idler spacing shall not exceed 900 mm. The belt speed shall be a minimum of 90 meters per minute and a maximum of

225 meters per minute. If concrete is to be placed through installed horizontal or sloping reinforcing bars, the conveyor shall discharge concrete into a pipe or elephant truck that is long enough to extend through the reinforcing bars.

3.7.6 Concrete Pumps

Concrete may be conveyed by positive displacement pump when approved. The pumping equipment shall be piston or squeeze pressure type; pneumatic placing equipment shall not be used. The pipeline shall be rigid steel pipe or heavy-duty flexible hose. The inside diameter of the pipe shall be at least 3 times the nominal maximum-size coarse aggregate in the concrete mixture to be pumped but not less than 100 mm. Aluminum pipe shall not be used.

3.8 PLACING CONCRETE

Mixed concrete shall be discharged within 1-1/2 hours or before the mixer drum has revolved 300 revolutions, whichever comes first after the introduction of the mixing water to the cement and aggregates. When the concrete temperature exceeds 30 degrees C, the time shall be reduced to 45 minutes. Concrete shall be placed within 15 minutes after it has been discharged from the transporting unit. Concrete shall be handled from mixer or transporting unit to forms in a continuous manner until the approved unit of operation is completed. Adequate scaffolding, ramps and walkways shall be provided so that personnel and equipment are not supported by in-place reinforcement. Placing will not be permitted when the sun, heat, wind, or limitations of facilities furnished by the Contractor prevent proper consolidation, finishing and curing. Sufficient placing capacity shall be provided so that concrete can be kept free of cold joints.

3.8.1 Depositing Concrete

Concrete shall be deposited as close as possible to its final position in the forms, and there shall be no vertical drop greater than 1.5 meters except where suitable equipment is provided to prevent segregation and where specifically authorized. Depositing of the concrete shall be so regulated that it will be effectively consolidated in horizontal layers not more than 300 mm thick, except that all slabs shall be placed in a single layer. Concrete to receive other construction shall be screeded to the proper level. Concrete shall be deposited continuously in one layer or in layers so that fresh concrete is deposited on in-place concrete that is still plastic. Fresh concrete shall not be deposited on concrete that has hardened sufficiently to cause formation of seams or planes of weakness within the section. Concrete that has surface dried, partially hardened, or contains foreign material shall not be used. When temporary spreaders are used in the forms, the spreaders shall be removed as their service becomes unnecessary. Concrete shall not be placed in slabs over columns and walls until concrete in columns and walls has been in-place at least two hours or until the concrete begins to lose its plasticity.

3.8.2 Consolidation

Immediately after placing, each layer of concrete shall be consolidated by internal vibrators. The vibrators shall at all times be adequate in effectiveness and number to properly consolidate the concrete; a spare vibrator shall be kept at the jobsite during all concrete placing operations. The vibrators shall have a frequency of not less than 10,000

vibrations per minute, an amplitude of at least 0.6 mm, and the head diameter shall be appropriate for the structural member and the concrete mixture being placed. Vibrators shall be inserted vertically at uniform spacing over the area of placement. The distance between insertions shall be approximately 1-1/2 times the radius of action of the vibrator so that the area being vibrated will overlap the adjacent just-vibrated area by a reasonable amount. The vibrator shall penetrate rapidly to the bottom of the layer and at least 150 mm into the preceding layer if there is such. Vibrator shall be held stationary until the concrete is consolidated and then vertically withdrawn slowly while operating. Form vibrators shall not be used unless specifically approved and unless forms are constructed to withstand their use. Vibrators shall not be used to move concrete within the forms. Frequency and amplitude of vibrators shall be determined in accordance with COE CRD-C 521. Grate tampers ("jitterbugs") shall not be used.

3.8.3 Cold Weather Requirements

Special protection measures, approved by the Contracting Officer, shall be used if freezing temperatures are anticipated before the expiration of the specified curing period. The ambient temperature of the air where concrete is to be placed and the temperature of surfaces to receive concrete shall be not less than 5 degrees C. The temperature of the concrete when placed shall be not less than 10 degrees C nor more than 25 degrees C. Heating of the mixing water or aggregates will be required to regulate the concrete placing temperature. Materials entering the mixer shall be free from ice, snow, or frozen lumps. Salt, chemicals or other materials shall not be incorporated in the concrete to prevent freezing. Upon written approval, an accelerating admixture conforming to ASTM C 494, Type C or E may be used, provided it contains no calcium chloride. Calcium chloride shall not be used.

3.8.4 Hot Weather Requirements

When the ambient temperature during concrete placing is expected to exceed 30 degrees C, the concrete shall be placed and finished with procedures previously submitted and as specified herein. The concrete temperature at time of delivery to the forms shall not exceed the temperature shown in the table below when measured in accordance with ASTM C 1064. Cooling of the mixing water or aggregates or placing concrete in the cooler part of the day may be required to obtain an adequate placing temperature. A retarder may be used, as approved, to facilitate placing and finishing. Steel forms and reinforcements shall be cooled as approved prior to concrete placement when steel temperatures are greater than 49 degrees C. Conveying and placing equipment shall be cooled if necessary to maintain proper concrete-placing temperature.

Maximum Allowable Concrete Placing Temperature

Relative Humidity, Percent, During Time of Concrete Placement	Maximum Allowable Concrete Temperature Degrees
Greater than 60	33 C
40-60	30 C
Less than 40	27 C

3.8.5 Prevention of Plastic Shrinkage Cracking

During hot weather with low humidity, and particularly with appreciable wind, as well as interior placements when space heaters produce low humidity, the Contractor shall be alert to the tendency for plastic shrinkage cracks to develop and shall institute measures to prevent this. Particular care shall be taken if plastic shrinkage cracking is potentially imminent and especially if it has developed during a previous placement. Periods of high potential for plastic shrinkage cracking can be anticipated by use of Fig. 2.1.5 of ACI 305R. In addition the concrete placement shall be further protected by erecting shades and windbreaks and by applying fog sprays of water, sprinkling, ponding or wet covering. Plastic shrinkage cracks that occur shall be filled by injection of epoxy resin as directed, after the concrete hardens. Plastic shrinkage cracks shall never be troweled over or filled with slurry.

3.9 JOINTS

Joints shall be located and constructed as indicated or approved. Joints not indicated on the drawings shall be located and constructed to minimize the impact on the strength of the structure. Joints in walls shall be at the underside of slabs and at the tops of footings or floor slabs, unless otherwise approved. Joints shall be perpendicular to the main reinforcement. All reinforcement shall be continued across joints; except that reinforcement or other fixed metal items shall not be continuous through expansion joints, or through construction or contraction joints in slabs on grade. Reinforcement shall be 50 mm clear from each joint. Except where otherwise indicated, construction joints between interior slabs on grade and vertical surfaces shall consist of 1.5 kg per square meter asphalt-saturated felt, extending for the full depth of the slab. The perimeters of the slabs shall be free of fins, rough edges, spalling, or other unsightly appearance. Reservoir for sealant for construction and contraction joints in slabs shall be formed to the dimensions shown on the drawings by removing snap-out joint-forming inserts, by sawing sawable inserts, or by sawing to widen the top portion of sawed joints. Joints to be sealed shall be cleaned and sealed as indicated and in accordance with Section 07920 JOINT SEALING.

3.9.1 Construction Joints

For concrete other than slabs on grade, construction joints shall be located so that the unit of operation does not exceed 30 meters. Concrete shall be placed continuously so that each unit is monolithic in construction. Fresh concrete shall not be placed against adjacent hardened concrete until it is at least 24 hours old. Construction joints shall be located as indicated or approved. Where concrete work is interrupted by weather, end of work shift or other similar type of delay, location and type of construction joint shall be subject to approval of the Contracting Officer. Unless otherwise indicated and except for slabs on grade, reinforcing steel shall extend through construction joints. Construction joints in slabs on grade shall be keyed or doweled as shown. Concrete walls or piers shall be in place at least 2 hours, or until the concrete begins to lose its plasticity, before placing concrete for slabs thereon. In walls having door or window openings, lifts shall terminate at the top and bottom of the opening. Other lifts shall terminate at such levels as to conform to structural requirements or architectural details. Where horizontal construction joints in walls or columns are required, a strip of 25 mm square-edge lumber, bevelled and oiled to facilitate removal, shall be tacked to the inside of the forms at the construction joint. Concrete

shall be placed to a point 25 mm above the underside of the strip. The strip shall be removed 1 hour after the concrete has been placed, and any irregularities in the joint line shall be leveled off with a wood float, and all laitance shall be removed. Prior to placing additional concrete, horizontal construction joints shall be prepared as specified in paragraph Previously Placed Concrete.

3.9.2 Contraction Joints in Slabs on Grade

Contraction joints shall be located and detailed as shown on the drawings. Contraction Joints shall be produced by forming a weakened plane in the concrete slab by use of rigid inserts impressed in the concrete during placing operations, use of snap-out plastic joint forming inserts or sawing a continuous slot with a concrete saw]. Regardless of method used to produce the weakened plane, it shall be 1/4 the depth of the slab thickness and between 3 and 5 mm wide. For saw-cut joints, cutting shall be timed properly with the set of the concrete. Cutting shall be started as soon as the concrete has hardened sufficiently to prevent ravelling of the edges of the saw cut. Cutting shall be completed before shrinkage stresses become sufficient to produce cracking. Reservoir for joint sealant shall be formed as previously specified.

3.9.3 Expansion Joints

Installation of expansion joints and sealing of these joints shall conform to the requirements of Section 03250 EXPANSION JOINTS, CONTRACTION JOINTS, AND WATERSTOPS and Section 07920 JOINT SEALING.

3.9.4 Waterstops

Waterstops shall be installed in conformance with the locations and details shown on the drawings using materials and procedures specified in Section 03250 EXPANSION JOINTS, CONTRACTION JOINTS, AND WATERSTOPS.

3.9.5 Dowels and Tie Bars

Dowels and tie bars shall be installed at the locations shown on the drawings and to the details shown, using materials and procedures specified in Section 03200 CONCRETE REINFORCEMENT and herein. Conventional smooth "paving" dowels shall be installed in slabs using approved methods to hold the dowel in place during concreting within a maximum alignment tolerance of 1 mm in 100 mm. "Structural" type deformed bar dowels, or tie bars, shall be installed to meet the specified tolerances. Care shall be taken during placing adjacent to and around dowels and tie bars to ensure there is no displacement of the dowel or tie bar and that the concrete completely embeds the dowel or tie bar and is thoroughly consolidated.

3.10 FINISHING FORMED SURFACES

Forms, form materials, and form construction are specified in Section 03100 STRUCTURAL CONCRETE FORMWORK. Finishing of formed surfaces shall be as specified herein. Unless another type of architectural or special finish is specified, surfaces shall be left with the texture imparted by the forms except that defective surfaces shall be repaired. Unless painting of surfaces is required, uniform color of the concrete shall be maintained by use of only one mixture without changes in materials or proportions for any structure or portion of structure that requires a Class B finish. Except for major defects, as defined hereinafter, surface defects shall be repaired as specified herein within 24 hours after forms are removed.

Repairs of the so-called "plaster-type" will not be permitted in any location. Tolerances of formed surfaces shall conform to the requirements of ACI 117/117R. These tolerances apply to the finished concrete surface, not to the forms themselves; forms shall be set true to line and grade. Form tie holes requiring repair and other defects whose depth is at least as great as their surface diameter shall be repaired as specified in paragraph Damp-Pack Mortar Repair. Defects whose surface diameter is greater than their depth shall be repaired as specified in paragraph Repair of Major Defects. Repairs shall be finished flush with adjacent surfaces and with the same surface texture. The cement used for all repairs shall be a blend of job cement with white cement proportioned so that the final color after curing and aging will be the same as the adjacent concrete. Concrete with excessive honeycomb, or other defects which affect the strength of the member, will be rejected. Repairs shall be demonstrated to be acceptable and free from cracks or loose or drummy areas at the completion of the contract and, for Class B Finishes, shall be inconspicuous. Repairs not meeting these requirements will be rejected and shall be replaced.

3.10.1 Class B Finish

Class B finish is required in the following areas, interior surfaces of arms vault and exposed surfaces of exterior walls. Fins, ravelings, and loose material shall be removed, all surface defects over 12 mm in diameter or more than 12 mm deep, shall be repaired and, except as otherwise indicated or as specified in Section 03100 STRUCTURAL CONCRETE FORMWORK, holes left by removal of form ties shall be reamed and filled. Defects more than 12 mm in diameter shall be cut back to sound concrete, but in all cases at least 25 mm deep. The Contractor shall prepare a sample panel for approval (as specified in PART 1) before commencing repair, showing that the surface texture and color match will be attained.

3.10.2 Class C Finish

Class C finish is required in the following areas, concealed surfaces of arms vault. Fins, ravelings, and loose material shall be removed, and, except as otherwise indicated or as specified in Section 03100 STRUCTURAL CONCRETE FORMWORK, holes left by removal of form ties shall be reamed and filled. Honeycomb and other defects more than 12 mm deep or more than 50 mm in diameter shall be repaired. Defects more than 50 mm in diameter shall be cut back to sound concrete, but in all cases at least 25 mm deep.

3.11 REPAIRS

3.11.1 Damp-Pack Mortar Repair

Form tie holes requiring repair and other defects whose depth is at least as great as their surface diameter but not over 100 mm shall be repaired by the damp-pack mortar method. Form tie holes shall be reamed and other similar defects shall be cut out to sound concrete. The void shall then be thoroughly cleaned, thoroughly wetted, brush-coated with a thin coat of neat cement grout and filled with mortar. Mortar shall be a stiff mix of 1 part portland cement to 2 parts fine aggregate passing the 1.18 mm (No. 16) sieve, and minimum amount of water. Only sufficient water shall be used to produce a mortar which, when used, will stick together on being molded into a ball by a slight pressure of the hands and will not exude water but will leave the hands damp. Mortar shall be mixed and allowed to stand for 30 to 45 minutes before use with remixing performed immediately prior to use. Mortar shall be thoroughly tamped in place in thin layers using a hammer

and hardwood block. Holes passing entirely through walls shall be completely filled from the inside face by forcing mortar through to the outside face. All holes shall be packed full. Damp-pack repairs shall be moist cured for at least 48 hours.

3.11.2 Repair of Major Defects

Major defects will be considered to be those more than 12 mm deep or, for Class B finishes, more than 12 mm in diameter and, for Class C finishes, more than 50 mm in diameter. Also included are any defects of any kind whose depth is over 100 mm or whose surface diameter is greater than their depth. Major defects shall be repaired as specified below.

3.11.2.1 Surface Application of Mortar Repair

Defective concrete shall be removed, and removal shall extend into completely sound concrete. Approved equipment and procedures which will not cause cracking or microcracking of the sound concrete shall be used. If reinforcement is encountered, concrete shall be removed so as to expose the reinforcement for at least 50 mm on all sides. All such defective areas greater than 7800 square mm shall be outlined by saw cuts at least 25 mm deep. Defective areas less than 7800 square mm shall be outlined by a 25 mm deep cut with a core drill in lieu of sawing. All saw cuts shall be straight lines in a rectangular pattern in line with the formwork panels. After concrete removal, the surface shall be thoroughly cleaned by high pressure washing to remove all loose material. Surfaces shall be kept continually saturated for the first 12 of the 24 hours immediately before placing mortar and shall be damp but not wet at the time of commencing mortar placement. The Contractor, at his option, may use either hand-placed mortar or mortar placed with a mortar gun. If hand-placed mortar is used, the edges of the cut shall be perpendicular to the surface of the concrete. The prepared area shall be brush-coated with a thin coat of neat cement grout. The repair shall then be made using a stiff mortar, preshrunk by allowing the mixed mortar to stand for 30 to 45 minutes and then remixed, thoroughly tamped into place in thin layers. If hand-placed mortar is used, the Contractor shall test each repair area for drumminess by firm tapping with a hammer and shall inspect for cracks, both in the presence of the Contracting Officer's representative, immediately before completion of the contract, and shall replace any showing drumminess or cracking. If mortar placed with a mortar gun is used, the gun shall be a small compressed air-operated gun to which the mortar is slowly hand fed and which applies the mortar to the surface as a high-pressure stream, as approved. Repairs made using shotcrete equipment will not be accepted. The mortar used shall be the same mortar as specified for damp-pack mortar repair. If gun-placed mortar is used, the edges of the cut shall be beveled toward the center at a slope of 1:1. All surface applied mortar repairs shall be continuously moist cured for at least 7 days. Moist curing shall consist of several layers of saturated burlap applied to the surface immediately after placement is complete and covered with polyethylene sheeting, all held closely in place by a sheet of plywood or similar material rigidly braced against it. Burlap shall be kept continually wet.

3.11.2.2 Repair of Deep and Large Defects

Deep and large defects will be those that are more than 150 mm deep and also have an average diameter at the surface more than 450 mm or that are otherwise so identified by the Project Office. Such defects shall be repaired as specified herein or directed, except that defects which affect

the strength of the structure shall not be repaired and that portion of the structure shall be completely removed and replaced. Deep and large defects shall be repaired by procedures approved in advance including forming and placing special concrete using applied pressure during hardening. Preparation of the repair area shall be as specified for surface application of mortar. In addition, the top edge (surface) of the repair area shall be sloped at approximately 20 degrees from the horizontal, upward toward the side from which concrete will be placed. The special concrete shall be a concrete mixture with low water content and low slump, and shall be allowed to age 30 to 60 minutes before use. Concrete containing a specified expanding admixture may be used in lieu of the above mixture; the paste portion of such concrete mixture shall be designed to have an expansion between 2.0 and 4.0 percent when tested in accordance with ASTM C 940. A full width "chimney" shall be provided at the top of the form on the placing side to ensure filling to the top of the opening. A pressure cap shall be used on the concrete in the chimney with simultaneous tightening and revibrating the form during hardening to ensure a tight fit for the repair. The form shall be removed after 24 hours and immediately the chimney shall be carefully chipped away to avoid breaking concrete out of the repair; the surface of the repair concrete shall be dressed as required.

3.12 FINISHING UNFORMED SURFACES

The finish of all unformed surfaces shall meet the requirements of paragraph Tolerances in PART 1, when tested as specified herein.

3.12.1 General

The ambient temperature of spaces adjacent to unformed surfaces being finished and of the base on which concrete will be placed shall be not less than 10 degrees C. In hot weather all requirements of paragraphs Hot Weather Requirements and Prevention of Plastic Shrinkage Cracking shall be met. Unformed surfaces that are not to be covered by additional concrete or backfill shall have a float finish, with additional finishing as specified below, and shall be true to the elevation shown on the drawings. Surfaces to receive additional concrete or backfill shall be brought to the elevation shown on the drawings, properly consolidated, and left true and regular. Unless otherwise shown on the drawings, exterior surfaces shall be sloped for drainage, as directed. Where drains are provided, interior floors shall be evenly sloped to the drains. Joints shall be carefully made with a jointing or edging tool. The finished surfaces shall be protected from stains or abrasions. Grate tampers or "jitterbugs" shall not be used for any surfaces. The dusting of surfaces with dry cement or other materials or the addition of any water during finishing shall not be permitted. If bleedwater is present prior to finishing, the excess water shall be carefully dragged off or removed by absorption with porous materials such as burlap. During finishing operations, extreme care shall be taken to prevent over finishing or working water into the surface; this can cause "crazing" (surface shrinkage cracks which appear after hardening) of the surface. Any slabs with surfaces which exhibit significant crazing shall be removed and replaced. During finishing operations, surfaces shall be checked with a 10 foot straightedge, applied in both directions at regular intervals while the concrete is still plastic, to detect high or low areas.

3.12.2 NOT USED

3.12.3 Floated Finish

Slabs to receive more than a rough slab finish shall next be given a wood float finish. The following areas, top of arms vault roof slab shall be given only a float finish. The screeding shall be followed immediately by darbying or bull floating before bleeding water is present, to bring the surface to a true, even plane. Then, after the concrete has stiffened so that it will withstand a man's weight without imprint of more than 6 mm and the water sheen has disappeared, it shall be floated to a true and even plane free of ridges. Floating shall be performed by use of suitable hand floats or power driven equipment. Sufficient pressure shall be used on the floats to bring a film of moisture to the surface. Hand floats shall be made of wood, magnesium, or aluminum. Concrete that exhibits stickiness shall be floated with a magnesium float. Care shall be taken to prevent over-finishing or incorporating water into the surface.

3.12.4 Troweled Finish

The following areas all interior slabs on grade shall be given a trowel finish. After floating is complete and after the surface moisture has disappeared, unformed surfaces shall be steel-troweled to a smooth, even, dense finish, free from blemishes including trowel marks. In lieu of hand finishing, an approved power finishing machine may be used in accordance with the directions of the machine manufacturer. Additional trowelings shall be performed, either by hand or machine until the surface has been troweled 3 times, with waiting period between each. Care shall be taken to prevent blistering and if such occurs, troweling shall immediately be stopped and operations and surfaces corrected. A final hard steel troweling shall be done by hand, with the trowel tipped, and using hard pressure, when the surface is at a point that the trowel will produce a ringing sound. The finished surface shall be thoroughly consolidated and shall be essentially free of trowel marks and be uniform in texture and appearance. The concrete mixture used for troweled finished areas shall be adjusted, if necessary, in order to provide sufficient fines (cementitious material and fine sand) to finish properly.

3.12.5 NOT USED

3.12.6 Non-Slip Finish

Non-slip floors shall be constructed in accordance with the following subparagraphs.

3.13 FLOOR HARDENER

Areas as indicated on the drawings. The following areas: mechanical rooms, tool rooms, rotor hub room, sheet metal room, engine room and the hanger bay slabs shall be treated with floor hardener. Floor hardener shall be applied after the concrete has been cured and then air dried for 14 days. Three coats shall be applied, each the day after the preceding coat was applied. For the first application, 0.5 kg of the silocofluoride shall be dissolved in 4 liters of water. For subsequent applications, the solution shall be 1.0 kg of silicofluoride to each 4 liters of water. Floor should be mopped with clear water shortly after the preceding application has dried to remove encrusted salts. Proprietary hardeners shall be applied in accordance with the manufacturer's instructions. During application, area should be well ventilated. Precautions shall be taken when applying silicofluorides due to the toxicity of the salts. Any compound that contacts glass or aluminum should be immediately removed with clear water.

3.14 EXTERIOR SLAB AND RELATED ITEMS

3.14.1 Pavements

Pavements shall be constructed where shown on the drawings. After forms are set and underlying material prepared as specified, the concrete shall be placed uniformly throughout the area and thoroughly vibrated. As soon as placed and vibrated, the concrete shall be struck off and screeded to the crown and cross section and to such elevation above grade that when consolidated and finished, the surface of the pavement will be at the required elevation. The entire surface shall be tamped with the strike off, or consolidated with a vibrating screed, and this operation continued until the required compaction and reduction of internal and surface voids are accomplished. Care shall be taken to prevent bringing excess paste to the surface. Immediately following the final consolidation of the surface, the pavement shall be floated longitudinally from bridges resting on the side forms and spanning but not touching the concrete. If necessary, additional concrete shall be placed and screeded, and the float operated until a satisfactory surface has been produced. The floating operation shall be advanced not more than half the length of the float and then continued over the new and previously floated surfaces. After finishing is completed but while the concrete is still plastic, minor irregularities and score marks in the pavement surface shall be eliminated by means of long-handled cutting straightedges. Straightedges shall be 3.75 m in length and shall be operated from the sides of the pavement and from bridges. A straightedge operated from the side of the pavement shall be equipped with a handle 1 m longer than one-half the width of the pavement. The surface shall then be tested for trueness with a 3.75 m straightedge held in successive positions parallel and at right angles to the center line of the pavement, and the whole area covered as necessary to detect variations. The straightedge shall be advanced along the pavement in successive stages of not more than one-half the length of the straightedge. Depressions shall be immediately filled with freshly mixed concrete, struck off, consolidated, and refinished. Projections above the required elevation shall also be struck off and refinished. The straightedge testing and finishing shall continue until the entire surface of the concrete is true. Before the surface sheen has disappeared and well before the concrete becomes nonplastic, the surface of the pavement shall be given a nonslip sandy surface texture by use of a burlap drag. A strip of clean, wet burlap from 1.0 to 1.5 m wide and 0.7 m longer than the pavement width shall be carefully pulled across the surface. Edges and joints shall be rounded with an edger having a radius of 3 mm. Curing shall be as specified.

3.14.2 Sidewalks

Concrete shall be 100 mm minimum thickness. Contraction joints shall be provided at 1.75 m spaces unless otherwise indicated. Contraction joints shall be cut 25 mm deep with a jointing tool after the surface has been finished. Transverse expansion joints 12 mm thick shall be provided at changes in direction and where sidewalk abuts curbs, steps, rigid pavement, or other similar structures. Sidewalks shall be given a lightly broomed finish. A transverse slope of 1 mm per 50 mm shall be provided, unless otherwise indicated. Variations in cross section shall be limited to 1 mm per 250 mm.

3.14.3 Curbs and Gutters

Concrete shall be formed, placed, and finished by hand using a properly

shaped "mule" or constructed using a slipform machine specially designed for this work. Contraction joints shall be cut 75 mm deep with a jointing tool after the surface has been finished. Expansion joints (12 mm wide) shall be provided at 35 m maximum spacing unless otherwise indicated. Exposed surfaces shall be finished using a stiff bristled brush.

3.14.4 Pits and Trenches

Pits and trenches shall be constructed as indicated on the drawings. Bottoms and walls shall be placed monolithically or waterstops and keys, shall be provided as approved.

3.15 CURING AND PROTECTION

3.15.1 General

Concrete shall be cured by an approved method for the period of time given below:

Concrete with Type III cement	3 days
All other concrete	7 days

Immediately after placement, concrete shall be protected from premature drying, extremes in temperatures, rapid temperature change, mechanical injury and damage from rain and flowing water for the duration of the curing period. Air and forms in contact with concrete shall be maintained at a temperature above 10 degrees C for the first 3 days and at a temperature above 0 degrees C for the remainder of the specified curing period. Exhaust fumes from combustion heating units shall be vented to the outside of the enclosure, and heaters and ducts shall be placed and directed so as not to cause areas of overheating and drying of concrete surfaces or to create fire hazards. Materials and equipment needed for adequate curing and protection shall be available and at the site prior to placing concrete. No fire or excessive heat, including welding, shall be permitted near or in direct contact with the concrete at any time. Except as otherwise permitted by paragraph Membrane Forming Curing Compounds, moist curing shall be provided for any areas to receive floor hardener, any paint or other applied coating, or to which other concrete is to be bonded. Except for plastic coated burlap, impervious sheeting alone shall not be used for curing.

3.15.2 Moist Curing

Concrete to be moist-cured shall be maintained continuously wet for the entire curing period, commencing immediately after finishing. If water or curing materials used stain or discolor concrete surfaces which are to be permanently exposed, the concrete surfaces shall be cleaned as approved. When wooden forms are left in place during curing, they shall be kept wet at all times. If steel forms are used in hot weather, nonsupporting vertical forms shall be broken loose from the concrete soon after the concrete hardens and curing water continually applied in this void. If the forms are removed before the end of the curing period, curing shall be carried out as on unformed surfaces, using suitable materials. Surfaces shall be cured by ponding, by continuous sprinkling, by continuously saturated burlap or cotton mats, or by continuously saturated plastic coated burlap. Burlap and mats shall be clean and free from any contamination and shall be completely saturated before being placed on the concrete. The Contractor shall have an approved work system to ensure that moist curing is continuous 24 hours per day.

3.15.3 Membrane Forming Curing Compounds

Membrane forming curing compounds shall be used only on surfaces in the following areas, exterior slabs pavements and walks and arm vault roof slab. Concrete in the these areas may be cured with a nonpigmented curing compound containing a fugitive dye in lieu of moist curing. Membrane curing shall not be used on surfaces that are to receive any subsequent treatment depending on adhesion or bonding to the concrete. Membrane curing compound shall not be used on surfaces that are maintained at curing temperatures with free steam. Curing compound shall be applied to formed surfaces immediately after the forms are removed and prior to any patching or other surface treatment except the cleaning of loose sand, mortar, and debris from the surface. All surfaces shall be thoroughly moistened with water. Curing compound shall be applied to slab surfaces as soon as the bleeding water has disappeared, with the tops of joints being temporarily sealed to prevent entry of the compound and to prevent moisture loss during the curing period. The curing compound shall be applied in a two-coat continuous operation by approved motorized power-spraying equipment operating at a minimum pressure of 500 kPa, at a uniform coverage of not more than 10 cubic meters per L for each coat, and the second coat shall be applied perpendicular to the first coat. Concrete surfaces which have been subjected to rainfall within 3 hours after curing compound has been applied shall be resprayed by the method and at the coverage specified. Surfaces on which clear compound is used shall be shaded from direct rays of the sun for the first 3 days. Surfaces coated with curing compound shall be kept free of foot and vehicular traffic, and from other sources of abrasion and contamination during the curing period.

3.15.4 NOT USED

3.15.5 Ponding or Immersion

Concrete shall be continually immersed throughout the curing period. Water shall not be more than 10 degrees C less than the temperature of the concrete.

3.15.6 Cold Weather Curing and Protection

When the daily ambient low temperature is less than 0 degrees C the temperature of the concrete shall be maintained above 5 degrees C for the first seven days after placing. During the period of protection removal, the air temperature adjacent to the concrete surfaces shall be controlled so that concrete near the surface will not be subjected to a temperature differential of more than 13 degrees C as determined by suitable temperature measuring devices furnished by the Government, as required, and installed adjacent to the concrete surface and 50 mm inside the surface of the concrete. The installation of the thermometers shall be made by the Contractor as directed.

3.16 SETTING BASE PLATES

After being properly positioned, column base plates, and machinery and equipment base plates shall be set to the proper line and elevation with damp-pack bedding mortar, except where nonshrink grout is indicated. The thickness of the mortar or grout shall be approximately 1/24 the width of the plate, but not less than 20 mm. Concrete and metal surfaces in contact with grout shall be clean and free of oil and grease, and concrete surfaces in contact with grout shall be damp and free of laitance when

grout is placed.

3.16.1 Damp-Pack Bedding Mortar

Damp-pack bedding mortar shall consist of 1 part cement and 2-1/2 parts fine aggregate having water content such that a mass of mortar tightly squeezed in the hand will retain its shape but will crumble when disturbed. The space between the top of the concrete and bottom of the bearing plate or base shall be packed with the bedding mortar by tamping or ramming with a bar or rod until it is completely filled.

3.16.2 Nonshrink Grout

Nonshrink grout shall be a ready-mixed material requiring only the addition of water. Water content shall be the minimum that will provide a flowable mixture and completely fill the space to be grouted without segregation, bleeding, or reduction of strength.

3.16.2.1 Mixing and Placing of Nonshrink Grout

Mixing and placing shall be in conformance with the material manufacturer's instructions and as specified therein. Ingredients shall be thoroughly dry-mixed before adding water. After adding water, the batch shall be mixed for 3 minutes. Batches shall be of size to allow continuous placement of freshly mixed grout. Grout not used within 30 minutes after mixing shall be discarded. The space between the top of the concrete or machinery-bearing surface and the plate shall be filled solid with the grout. Forms shall be of wood or other equally suitable material for completely retaining the grout on all sides and on top and shall be removed after the grout has set. The placed grout shall be carefully worked by rodding or other means to eliminate voids; however, overworking and breakdown of the initial set shall be avoided. Grout shall not be retempered or subjected to vibration from any source. Where clearances are unusually small, placement shall be under pressure with a grout pump. Temperature of the grout, and of surfaces receiving the grout, shall be maintained at 18 to 30 degrees C until after setting.

3.16.2.2 Treatment of Exposed Surfaces

For metal-oxidizing nonshrink grout, exposed surfaces shall be cut back 25 mm and immediately covered with a parge coat of mortar consisting of 1 part portland cement and 2-1/2 parts fine aggregate by weight, with sufficient water to make a plastic mixture. The parge coat shall have a smooth finish. For other mortars or grouts, exposed surfaces shall have a smooth-dense finish and be left untreated. Curing shall comply with paragraph CURING AND PROTECTION.

3.17 TESTING AND INSPECTION FOR CONTRACTOR QUALITY CONTROL

The Contractor shall perform the inspection and tests described below and, based upon the results of these inspections and tests, shall take the action required and shall submit specified reports. When, in the opinion of the Contracting Officer, the concreting operation is out of control, concrete placement shall cease and the operation shall be corrected. The laboratory performing the tests shall be onsite and shall conform with ASTM C 1077. Materials may be subjected to check testing by the Government from samples obtained at the manufacturer, at transfer points, or at the project site. The Government will inspect the laboratory, equipment, and test procedures prior to start of concreting operations and at least once per

year thereafter for conformance with ASTM C 1077.

3.17.1 Grading and Corrective Action

3.17.1.1 Fine Aggregate

At least once during each shift when the concrete plant is operating, there shall be one sieve analysis and fineness modulus determination in accordance with ASTM C 136 and COE CRD-C 104 for the fine aggregate or for each fine aggregate if it is batched in more than one size or classification. The location at which samples are taken may be selected by the Contractor as the most advantageous for control. However, the Contractor is responsible for delivering fine aggregate to the mixer within specification limits. When the amount passing on any sieve is outside the specification limits, the fine aggregate shall be immediately resampled and retested. If there is another failure on any sieve, the fact shall immediately reported to the Contracting Officer, concreting shall be stopped, and immediate steps taken to correct the grading.

3.17.1.2 Coarse Aggregate

At least once during each shift in which the concrete plant is operating, there shall be a sieve analysis in accordance with ASTM C 136 for each size of coarse aggregate. The location at which samples are taken may be selected by the Contractor as the most advantageous for production control. However, the Contractor shall be responsible for delivering the aggregate to the mixer within specification limits. A test record of samples of aggregate taken at the same locations shall show the results of the current test as well as the average results of the five most recent tests including the current test. The Contractor may adopt limits for control coarser than the specification limits for samples taken other than as delivered to the mixer to allow for degradation during handling. When the amount passing any sieve is outside the specification limits, the coarse aggregate shall be immediately resampled and retested. If the second sample fails on any sieve, that fact shall be reported to the Contracting Officer. Where two consecutive averages of 5 tests are outside specification limits, the operation shall be considered out of control and shall be reported to the Contracting Officer. Concreting shall be stopped and immediate steps shall be taken to correct the grading.

3.17.2 Quality of Aggregates

Thirty days prior to the start of concrete placement, the Contractor shall perform all tests for aggregate quality required by ASTM C 33. In addition, after the start of concrete placement, the Contractor shall perform tests for aggregate quality at least every three months, and when the source of aggregate or aggregate quality changes. Samples tested after the start of concrete placement shall be taken immediately prior to entering the concrete mixer.

3.17.3 Scales, Batching and Recording

The accuracy of the scales shall be checked by test weights prior to start of concrete operations and at least once every three months. Such tests shall also be made as directed whenever there are variations in properties of the fresh concrete that could result from batching errors. Once a week the accuracy of each batching and recording device shall be checked during a weighing operation by noting and recording the required weight, recorded weight, and the actual weight batched. At the same time, the Contractor

shall test and ensure that the devices for dispensing admixtures are operating properly and accurately. When either the weighing accuracy or batching accuracy does not comply with specification requirements, the plant shall not be operated until necessary adjustments or repairs have been made. Discrepancies in recording accuracies shall be corrected immediately.

3.17.4 Batch-Plant Control

The measurement of concrete materials including cementitious materials, each size of aggregate, water, and admixtures shall be continuously controlled. The aggregate weights and amount of added water shall be adjusted as necessary to compensate for free moisture in the aggregates. The amount of air-entraining agent shall be adjusted to control air content within specified limits. A report shall be prepared indicating type and source of cement used, type and source of pozzolan or slag used, amount and source of admixtures used, aggregate source, the required aggregate and water weights per cubic meter, amount of water as free moisture in each size of aggregate, and the batch aggregate and water weights per cubic meter for each class of concrete batched during each day's plant operation.

3.17.5 Concrete Mixture

a. Air Content Testing. Air content tests shall be made when test specimens are fabricated. In addition, at least two tests for air content shall be made on randomly selected batches of each separate concrete mixture produced during each 8-hour period of concrete production. Additional tests shall be made when excessive variation in workability is reported by the placing foreman or Government inspector. Tests shall be made in accordance with ASTM C 231 for normal weight concrete and ASTM C 173 for lightweight concrete. Test results shall be plotted on control charts which shall at all times be readily available to the Government and shall be submitted weekly. Copies of the current control charts shall be kept in the field by testing crews and results plotted as tests are made. When a single test result reaches either the upper or lower action limit, a second test shall immediately be made. The results of the two tests shall be averaged and this average used as the air content of the batch to plot on both the air content and the control chart for range, and for determining need for any remedial action. The result of each test, or average as noted in the previous sentence, shall be plotted on a separate control chart for each mixture on which an "average line" is set at the midpoint of the specified air content range from paragraph Air Entrainment. An upper warning limit and a lower warning limit line shall be set 1.0 percentage point above and below the average line, respectively. An upper action limit and a lower action limit line shall be set 1.5 percentage points above and below the average line, respectively. The range between each two consecutive tests shall be plotted on a secondary control chart for range where an upper warning limit is set at 2.0 percentage points and an upper action limit is set at 3.0 percentage points. Samples for air content may be taken at the mixer, however, the Contractor is responsible for delivering the concrete to the placement site at the stipulated air content. If the Contractor's materials or transportation methods cause air content loss between the mixer and the placement, correlation samples shall be taken at the placement site as required by the Contracting Officer, and the air content at the mixer controlled as directed.

b. Air Content Corrective Action. Whenever points on the control chart for percent air reach either warning limit, an adjustment shall immediately be made in the amount of air-entraining admixture batched. As soon as practical after each adjustment, another test shall be made to verify the result of the adjustment. Whenever a point on the secondary control chart for range reaches the warning limit, the admixture dispenser shall be recalibrated to ensure that it is operating accurately and with good reproducibility. Whenever a point on either control chart reaches an action limit line, the air content shall be considered out of control and the concreting operation shall immediately be halted until the air content is under control. Additional air content tests shall be made when concreting is restarted.

c. Slump Testing. In addition to slump tests which shall be made when test specimens are fabricated, at least four slump tests shall be made on randomly selected batches in accordance with ASTM C 143 for each separate concrete mixture produced during each 8-hour or less period of concrete production each day. Also, additional tests shall be made when excessive variation in workability is reported by the placing foreman or Government inspector. Test results shall be plotted on control charts which shall at all times be readily available to the Government and shall be submitted weekly. Copies of the current control charts shall be kept in the field by testing crews and results plotted as tests are made. When a single slump test reaches or goes beyond either the upper or lower action limit, a second test shall immediately be made. The results of the two tests shall be averaged and this average used as the slump of the batch to plot on both the control charts for slump and the chart for range, and for determining need for any remedial action. Limits shall be set on separate control charts for slump for each type of mixture. The upper warning limit shall be set at 12.5 mm below the maximum allowable slump specified in paragraph Slump in PART 1 for each type of concrete and an upper action limit line and lower action limit line shall be set at the maximum and minimum allowable slumps, respectively, as specified in the same paragraph. The range between each consecutive slump test for each type of mixture shall be plotted on a single control chart for range on which an upper action limit is set at 50 mm. Samples for slump shall be taken at the mixer. However, the Contractor is responsible for delivering the concrete to the placement site at the stipulated slump. If the Contractor's materials or transportation methods cause slump loss between the mixer and the placement, correlation samples shall be taken at the placement site as required by the Contracting Officer, and the slump at the mixer controlled as directed.

d. Slump Corrective Action. Whenever points on the control charts for slump reach the upper warning limit, an adjustment shall immediately be made in the batch weights of water and fine aggregate. The adjustments are to be made so that the total water content does not exceed that amount allowed by the maximum w/c ratio specified, based on aggregates which are in a saturated surface dry condition. When a single slump reaches the upper or lower action limit, no further concrete shall be delivered to the placing site until proper adjustments have been made. Immediately after each adjustment, another test shall be made to verify the correctness of the adjustment. Whenever two consecutive individual

slump tests, made during a period when there was no adjustment of batch weights, produce a point on the control chart for range at or above the upper action limit, the concreting operation shall immediately be halted, and the Contractor shall take appropriate steps to bring the slump under control. Additional slump tests shall be made as directed.

e. Temperature. The temperature of the concrete shall be measured when compressive strength specimens are fabricated. Measurement shall be in accordance with ASTM C 1064. The temperature shall be reported along with the compressive strength data.

f. Strength Specimens. At least one set of test specimens shall be made, for compressive or flexural strength as appropriate, on each different concrete mixture placed during the day for each 380 cubic meters or portion thereof of that concrete mixture placed each day. Additional sets of test specimens shall be made, as directed by the Contracting Officer, when the mixture proportions are changed or when low strengths have been detected. A truly random (not haphazard) sampling plan shall be developed by the Contractor and approved by the Contracting Officer prior to the start of construction. The plan shall assure that sampling is done in a completely random and unbiased manner. A set of test specimens for concrete with a 28-day specified strength per paragraph Strength Requirements in PART 1 shall consist of four specimens, two to be tested at 7 days and two at 28 days. Test specimens shall be molded and cured in accordance with ASTM C 31 and tested in accordance with ASTM C 39 for test cylinders and ASTM C 78 for test beams. Results of all strength tests shall be reported immediately to the Contracting Officer. Quality control charts shall be kept for individual strength "tests", ("test" as defined in paragraph Strength Requirements in PART 1) moving average of last 3 "tests" for strength, and moving average for range for the last 3 "tests" for each mixture. The charts shall be similar to those found in ACI 214.3R.

3.17.6 Inspection Before Placing

Foundations, construction joints, forms, and embedded items shall be inspected by the Contractor in sufficient time prior to each concrete placement in order to certify to the Contracting Officer that they are ready to receive concrete. The results of each inspection shall be reported in writing.

3.17.7 Placing

The placing foreman shall supervise placing operations, shall determine that the correct quality of concrete or grout is placed in each location as specified and as directed by the Contracting Officer, and shall be responsible for measuring and recording concrete temperatures and ambient temperature hourly during placing operations, weather conditions, time of placement, volume placed, and method of placement. The placing foreman shall not permit batching and placing to begin until it has been verified that an adequate number of vibrators in working order and with competent operators are available. Placing shall not be continued if any pile of concrete is inadequately consolidated. If any batch of concrete fails to meet the temperature requirements, immediate steps shall be taken to improve temperature controls.

3.17.8 Vibrators

The frequency and amplitude of each vibrator shall be determined in accordance with COE CRD-C 521 prior to initial use and at least once a month when concrete is being placed. Additional tests shall be made as directed when a vibrator does not appear to be adequately consolidating the concrete. The frequency shall be determined while the vibrator is operating in concrete with the tachometer being held against the upper end of the vibrator head while almost submerged and just before the vibrator is withdrawn from the concrete. The amplitude shall be determined with the head vibrating in air. Two measurements shall be taken, one near the tip and another near the upper end of the vibrator head, and these results averaged. The make, model, type, and size of the vibrator and frequency and amplitude results shall be reported in writing. Any vibrator not meeting the requirements of paragraph Consolidation, shall be immediately removed from service and repaired or replaced.

3.17.9 Curing Inspection

a. Moist Curing Inspections. At least once each shift, and not less than twice per day on both work and non-work days, an inspection shall be made of all areas subject to moist curing. The surface moisture condition shall be noted and recorded.

b. Moist Curing Corrective Action. When a daily inspection report lists an area of inadequate curing, immediate corrective action shall be taken, and the required curing period for those areas shall be extended by 1 day.

c. Membrane Curing Inspection. No curing compound shall be applied until the Contractor has verified that the compound is properly mixed and ready for spraying. At the end of each operation, the Contractor shall estimate the quantity of compound used by measurement of the container and the area of concrete surface covered, shall compute the rate of coverage in square meters per Liter, and shall note whether or not coverage is uniform.

d. Membrane Curing Corrective Action. When the coverage rate of the curing compound is less than that specified or when the coverage is not uniform, the entire surface shall be sprayed again.

e. Sheet Curing Inspection. At least once each shift and once per day on non-work days, an inspection shall be made of all areas being cured using impervious sheets. The condition of the covering and the tightness of the laps and tapes shall be noted and recorded.

f. Sheet Curing Corrective Action. When a daily inspection report lists any tears, holes, or laps or joints that are not completely closed, the tears and holes shall promptly be repaired or the sheets replaced, the joints closed, and the required curing period for those areas shall be extended by 1 day.

3.17.10 Cold-Weather Protection

At least once each shift and once per day on non-work days, an inspection shall be made of all areas subject to cold-weather protection. Any deficiencies shall be noted, corrected, and reported.

3.17.11 Mixer Uniformity

a. Stationary Mixers. Prior to the start of concrete placing and once every 6 months when concrete is being placed, or once for every 60,000 cubic meters of concrete placed, whichever results in the shortest time interval, uniformity of concrete mixing shall be determined in accordance with ASTM C 94.

b. Mixer Uniformity Corrective Action. When a mixer fails to meet mixer uniformity requirements, either the mixing time shall be increased, batching sequence changed, batch size reduced, or adjustments shall be made to the mixer until compliance is achieved.

3.17.12 Reports

All results of tests or inspections conducted shall be reported informally as they are completed and in writing daily. A weekly report shall be prepared for the updating of control charts covering the entire period from the start of the construction season through the current week. During periods of cold-weather protection, reports of pertinent temperatures shall be made daily. These requirements do not relieve the Contractor of the obligation to report certain failures immediately as required in preceding paragraphs. Such reports of failures and the action taken shall be confirmed in writing in the routine reports. The Contracting Officer has the right to examine all contractor quality control records.

-- End of Section --

SECTION 04200

MASONRY

PART 1 GENERAL

1.1 REFERENCES

The publications listed below form a part of this specification to the extent referenced. The publications are referred to in the text by basic designation only.

ACI INTERNATIONAL (ACI)

ACI SP-66	(1994) ACI Detailing Manual

AMERICAN SOCIETY FOR TESTING AND MATERIALS (ASTM)

ASTM A 82	(1995a) Steel Wire, Plain, for Concrete Reinforcement
ASTM A 153	(1996) Zinc Coating (Hot-Dip) on Iron and Steel Hardware
ASTM A 615/A 615M	(1996a) Deformed and Plain Billet-Steel Bars for Concrete Reinforcement
ASTM C 55	(1996a) Concrete Brick
ASTM C 67	(1996) Sampling and Testing Brick and Structural Clay Tile
ASTM C 90	(1996a) Loadbearing Concrete Masonry Units
ASTM C 91	(1996) Masonry Cement
ASTM C 140	(1996b) Sampling and Testing Concrete Masonry Units
ASTM C 216	(1995a) Facing Brick (Solid Masonry Units Made from Clay or Shale)
ASTM C 270	(1997) Mortar for Unit Masonry
ASTM C 476	(1995) Grout for Masonry
ASTM C 494	(1992) Chemical Admixtures for Concrete
ASTM C 578	(1995) Rigid, Cellular Polystyrene Thermal Insulation
ASTM C 641	(1982; R 1991) Staining Materials in Lightweight Concrete Aggregates
ASTM C 652	(1997) Hollow Brick (Hollow Masonry Units

	Made From Clay or Shale)
ASTM C 780	(1996) Preconstruction and Construction Evaluation of Mortars for Plain and Reinforced Unit Masonry
ASTM C 1019	(1989a; R 1993) Sampling and Testing Grout
ASTM C 1072	(1994) Measurement of Masonry Flexural Bond Strength
ASTM C 1289	(1995) Faced Rigid Cellular Polyisocyanurate Thermal Insulation Board
ASTM D 2000	(1996) Rubber Products in Automotive Applications
ASTM D 2240	(1997) Rubber Property - Durometer Hardness
ASTM D 2287	(1996) Nonrigid Vinyl Chloride Polymer and Copolymer Molding and Extrusion Compounds
ASTM E 447	(1992b) Compressive Strength of Masonry Prisms

1.2 SUBMITTALS

Government approval is required for submittals with a "GA" designation; submittals having an "FIO" designation are for information only. The following shall be submitted in accordance with Section 01330 SUBMITTAL PROCEDURES:

SD-01 Data

Clay or Shale Brick; GA. Concrete Brick; GA. Insulation; GA.

Manufacturer's descriptive data.

SD-04 Drawings

Masonry Work; GA.

Drawings including plans, elevations, and details of wall reinforcement; details of reinforcing bars at corners and wall intersections; offsets; tops, bottoms, and ends of walls; control and expansion joints; and wall openings. Bar splice locations shall be shown. If the Contractor opts to furnish inch-pound CMU products, drawings showing elevation of walls exposed to view and indicating the location of all cut CMU products shall be submitted for approval. Bent bars shall be identified on a bending diagram and shall be referenced and located on the drawings. Wall dimensions, bar clearances, and wall openings greater than one masonry unit in area shall be shown. No approval will be given to the shop drawings until the Contractor certifies that all openings, including those for mechanical and electrical service, are shown. If, during construction, additional masonry openings are required, the approved shop drawings shall be resubmitted with the additional openings shown along with the proposed changes. Location of these additional openings shall be clearly highlighted. The minimum scale for wall elevations shall be 1 to 50. Reinforcement bending details shall conform to the requirements of ACI SP-66.

SD-08 Statements

Cold Weather Installation; GA.

Cold weather construction procedures.

SD-09 Reports

Efflorescence Test; GA. Field Testing of Mortar; GA. Field Testing of Grout; GA. Prism tests; GA. Masonry Cement; GA. Fire-rated CMU; GA.

Test reports from an approved independent laboratory. Test reports on a previously tested material shall be certified as the same as that proposed for use in this project.

Special Inspection; GA.

Copies of masonry inspector reports.

SD-13 Certificates

Clay or Shale Brick; FI0. Concrete Brick; FIO. Concrete Masonry Units (CMU); FIO. Control Joint Keys; FIO. Anchors, Ties, and Bar Positioners; FIO. Expansion-Joint Materials; FIO. Joint Reinforcement; FIO. Reinforcing Steel Bars and Rods; FIO. Masonry Cement; FIO. Mortar Coloring ; FIO. Insulation; FIO. Precast Concrete Items; FIO. Mortar Admixtures; FIO. Grout Admixtures; FIO.

Certificates of compliance stating that the materials meet the specified requirements.

Insulation; GA.

Certificate attesting that the polyurethane or polyisocyanurate insulation furnished for the project contains recovered material, and showing an estimated percent of such recovered material.

SD-14 Samples

Concrete Masonry Units (CMU); GA. Concrete Brick; GA. Stone Items; GA. Clay or Shale Brick; GA.

Color samples of three stretcher units and one unit for each type of special shape. Units shall show the full range of color and texture.

Anchors, Ties, and Bar Positioners; GA.

Two of each type used.

Expansion-Joint Material; GA.

One piece of each type used.

Joint Reinforcement; GA.

One piece of each type used, including corner and wall intersection pieces, showing at least two cross wires.

Insulation; GA.

One piece of board type insulation, not less than 400 mm by 600 mm in size, containing the label indicating the rated permeance and R-values.

Portable Panel; GA.

One panel of clay or shale brick, 600 mm by 600 mm, containing approximately 24 brick facings to establish range of color and texture.

1.3 SAMPLE MASONRY PANELS

After material samples are approved and prior to starting masonry work, sample masonry panels shall be constructed for each type and color of masonry required. At least 48 hours prior to constructing the sample panel or panels, the Contractor shall submit written notification to the Contracting Officer's Representative. Sample panels shall not be built in, or as part of the structure, but shall be located where directed.

1.3.1 Configuration

Panels shall be L-shaped or otherwise configured to represent all of the wall elements. Panels shall be of the size necessary to demonstrate the acceptable level of workmanship for each type of masonry represented on the project. The minimum size of a straight panel or a leg of an L-shaped panel shall be 2.5 m by 1.2 m. (4 feet) high.

1.3.2 Composition

Panels shall show full color range, texture, and bond pattern of the masonry work. The Contractor's method for mortar joint tooling; grouting of reinforced vertical cores, collar joints, bond beams, and lintels; positioning, securing, and lapping of reinforcing steel; positioning and lapping of joint reinforcement (including prefabricated corners); and cleaning of masonry work shall be demonstrated during the construction of the panels. Installation or application procedures for anchors, wall ties, glass block units, CMU control joints, brick expansion joints, insulation, flashing, brick soldier, row lock courses and weep holes shall be shown in the sample panels. The panels shall contain a masonry bonded corner that includes a bond beam corner. Panels that represent reinforced masonry shall contain a 600 mm by 600 mm (2 foot by 2 foot) opening placed at least 600 mm (2 feet) above the panel base and 600 mm (2 feet) away from all free edges, corners, and control joints. Required reinforcing shall be provided around this opening as well as at wall corners and control joints.

1.3.3 Construction Method

Where anchored veneer walls are required, the Contractor shall demonstrate and receive approval for the method of construction; i.e., either bring up the two wythes together or separately, with the insulation and appropriate ties placed within the specified tolerances across the cavity. Temporary provisions shall be demonstrated to preclude mortar or grout droppings in the cavity and to provide a clear open air space of the dimensions shown on the drawings. Where masonry is to be grouted, the Contractor shall demonstrate and receive approval on the method that will be used to bring up the masonry wythes; support the reinforcing bars; and grout cells, bond beams, lintels, and collar joints using the requirements specified herein. If sealer is specified to be applied to the masonry units, sealer shall be applied to the sample panels. Panels shall be built on a properly designed

concrete foundation.

1.3.4 Usage

The completed panels shall be used as the standard of workmanship for the type of masonry represented. Masonry work shall not commence until the sample panel for that type of masonry construction has been completed and approved. Panels shall be protected from the weather and construction operations until the masonry work has been completed and approved. After completion of the work, the sample panels, including all foundation concrete, shall become the property of the Contractor and shall be removed from the construction site.

1.4 DELIVERY, HANDLING, AND STORAGE

Materials shall be delivered, handled, stored, and protected to avoid chipping, breakage, and contact with soil or contaminating material.

1.4.1 Masonry Units

Concrete masonry units shall be covered or protected from inclement weather and shall conform to the moisture content as specified in ASTM C 90when delivered to the jobsite. In addition, glass block units and prefaced concrete units shall be stored with their finish surfaces covered. Prefabricated lintels shall be marked on top sides to show either the lintel schedule number or the number and size of top and bottom bars.

1.4.2 Reinforcement, Anchors, and Ties

Steel reinforcing bars, coated anchors, ties, and joint reinforcement shall be stored above the ground. Steel reinforcing bars and uncoated ties shall be free of loose mill scale and rust.

1.4.3 Cementitious Materials, Sand and Aggregates

Cementitious and other packaged materials shall be delivered in unopened containers, plainly marked and labeled with manufacturers' names and brands. Cementitious material shall be stored in dry, weathertight enclosures or be completely covered. Cement shall be handled in a manner that will prevent the inclusion of foreign materials and damage by water or dampness. Sand and aggregates shall be stored in a manner to prevent contamination or segregation.

1.5 SPECIAL INSPECTION

A qualified masonry inspector approved by the Contracting Officer shall perform inspection of the masonry work. Minimum qualifications for the masonry inspector shall be 5 years of reinforced masonry inspection experience or acceptance by a State, municipality, or other governmental body having a program of examining and certifying inspectors for reinforced masonry construction. The masonry inspector shall be present during preparation of masonry prisms, sampling and placing of masonry units, placement of reinforcement (including placement of dowels in footings and foundation walls), inspection of grout space, immediately prior to closing of cleanouts, and during grouting operations. The masonry inspector shall assure Contractor compliance with the drawings and specifications. The masonry inspector shall keep a complete record of all inspections and shall submit daily written reports to the Quality Control Supervisory Representative reporting the quality of masonry construction.

PART 2 PRODUCTS

2.1 GENERAL REQUIREMENTS

The source of materials which will affect the appearance of the finished work shall not be changed after the work has started except with Contracting Officer's approval. The Contractor has the option to use either hard metric or substitute inch-pound (soft-metric) CMU products. If the Contractor decides to substitute inch-pound CMU products, the following additional requirements shall be met:

a. The metric dimensions indicated on the drawings shall not be altered to accommodate inch-pound CMU products either horizontally or vertically. The 100 mm building module shall be maintained, except for the CMU products themselves.

b. Mortar joint widths shall be maintained as specified.

c. Rebars shall not be cut, bent or eliminated to fit into the inch-pound CMU products module.

d. Brick and inch-pound CMU products shall not be reduced in size by more than one-third (1/3) in height and one-half (1/2) in length. Cut CMU products shall not be located at ends of walls, corners, and other openings.

e. Cut, exposed brick and CMU products shall be held to a minimum and located where they would have the least impact on the architectural aesthetic goals of the facility.

f. Other building components, built into the CMU products, such as window frames, door frames, louvers, grilles, fire dampers, etc., that are required to be metric, shall remain metric.

g. Additional metric guidance shall conform to Section 01415 METRIC MEASUREMENTS.

2.2 CLAY OR SHALE BRICK

Color range and texture of clay or shale brick shall be as indicated and shall conform to the approved sample. Grade SW shall be used for brick in contact with earth or grade and for all exterior work. Grade SW or MW shall be used in other brickwork. Brick shall be tested for efflorescence. Clay or shale brick units shall be delivered factory-blended to provide a uniform appearance and color range in the completed wall.

2.2.1 Solid Clay or Shale Brick

Solid clay or shale brick shall conform to ASTM C 216, Type FBS. Brick size shall be modular and the nominal size of the brick used shall be 68 mm (2 2/3 inches) thick, 100 mm (4 inches) wide, and 200 mm (8 inches) long. Minimum compressive strength of the brick shall be 55 MPa (8000 psi).

2.2.2 Hollow Clay or Shale Brick

Hollow clay or shale brick shall conform to ASTM C 652, Type HBX. Brick size shall be modular and the nominal size of the brick used shall be 68 mm (2 2/3 inches) thick, 100 mm (4 inches) wide, and 200 mm (8 inches) long.

Where vertical reinforcement is shown in hollow brick, the minimum cell dimension shall be 64 mm (2-1/2 inches) and the units shall be designed to provide precise vertical alignment of the cells. Minimum compressive strength of the brick shall be 55 MPa (8000 psi).

2.3 CONCRETE BRICK

Concrete brick shall conform to ASTM C 55, Type I, Grade N-I. Concrete brick may be used where necessary for filling out in concrete masonry unit construction.

2.4 CONCRETE MASONRY UNITS (CMU)

Hollow and solid concrete masonry units shall conform to ASTM C 90, Type I. Cement shall have a low alkali content and be of one brand.

2.4.1 Aggregates

Lightweight aggregates and blends of lightweight and heavier aggregates in proportions used in producing the units, shall comply with the following requirements when tested for stain-producing iron compounds in accordance with ASTM C 641: by visual classification method, the iron stain deposited on the filter paper shall not exceed the "light stain" classification.

2.4.2 Kinds and Shapes

Units shall be modular in size and shall include closer, jamb, header, lintel, and bond beam units and special shapes and sizes to complete the work as indicated. In exposed interior masonry surfaces, units having a bullnose shall be used for vertical external corners except at door, window, and louver jambs. Radius of the bullnose shall be 25 mm (1 inch). Units used in exposed masonry surfaces in any one building shall have a uniform fine to medium texture and a uniform color.

2.4.3 Fire-Rated CMU

Concrete masonry units used in fire-rated construction shown on the drawings shall be of minimum equivalent thickness for the fire rating indicated and the corresponding type of aggregates indicated in TABLE I. Units containing more than one of the aggregates listed in TABLE I will be rated on the aggregate requiring the greater minimum equivalent thickness to produce the required fire rating.

TABLE I

FIRE-RATED CONCRETE MASONRY UNITS

See note (a) below

Aggregate Type	Minimum equivalent thickness in mm (inches) for fire rating of: 4 hours	3 hours	2 hours
Pumice	120 (4.7)	100 (4.0)	75 (3.0)
Expanded slag	130 (5.0)	110 (4.2)	85 (3.3)

TABLE I

FIRE-RATED CONCRETE MASONRY UNITS

	See note (a) below		
Expanded clay, shale, or slate	145 (5.7)	120 (4.8)	95 (3.7)
Limestone, scoria, cinders or unexpanded slag	150 (5.9)	130 (5.0)	100 (4.0)
Calcareous gravel	160 (6.2)	135 (5.3)	105 (4.2)
Siliceous gravel	170 (6.7)	145 (5.7)	115 (4.5)

(a) Minimum equivalent thickness shall equal net volume as determined in conformance with ASTM C 140 divided by the product of the actual length and height of the face shell of the unit in millimeters . Where walls are to receive plaster or be faced with brick, or otherwise form an assembly; the thickness of plaster or brick or other material in the assembly will be included in determining the equivalent thickness.

2.5 NOT USED

2.6 NOT USED

2.7 NOT USED

2.8 PRECAST CONCRETE ITEMS

Trim, lintels, copings, splashblocks and door sills shall be factory-made units from a plant regularly engaged in producing precast concrete units. Unless otherwise indicated, concrete shall be 28 MPa (4000 psi) minimum conforming to Section 03300 CAST-IN-PLACE STRUCTURAL CONCRETE using 13 mm (1/2 inch) to No. 4 nominal-size coarse aggregate, and minimum reinforcement shall be the reinforcement required for handling of the units. Clearance of 20 mm (3/4 inch) shall be maintained between reinforcement and faces of units. Unless precast-concrete items have been subjected during manufacture to saturated-steam pressure of at least 827 kPa (120 psi) for at least 5 hours, the items, after casting, shall be either damp-cured for 24 hours or steam-cured and shall then be aged under cover for 28 days or longer. Cast-concrete members weighing over 35 kg (80 pounds) shall have built-in loops of galvanized wire or other approved provisions for lifting and anchoring. Units shall have beds and joints at right angles to the face, with sharp true arises and shall be cast with drip grooves on the underside where units overhang walls. Exposed-to-view surfaces shall be free of surface voids, spalls, cracks, and chipped or broken edges. Precast units exposed-to-view shall be of uniform appearance and color. Unless otherwise specified, units shall have a smooth dense finish. Prior to use, each item shall be wetted and inspected for crazing. Items showing evidence of dusting, spalling, crazing, or having surfaces treated with a protective coating will be rejected.

2.8.1 Lintels

Precast lintels, unless otherwise shown, shall be of a thickness equal to the wall and reinforced with two No. 4 bars for the full length. Top of

lintels shall be labeled "TOP" or otherwise identified and each lintel shall be clearly marked to show location in the structure.

2.8.2 Sills and Copings

Sills and copings shall be cast with washes. Sills for windows having mullions shall be cast in sections with head joints at mullions and a 6 mm (1/4 inch) allowance for mortar joints. The ends of sills, except a 20 mm (3/4 inch) wide margin at exposed surfaces, shall be roughened for bond. Treads of door sills shall have rounded nosings.

2.8.3 Splash Blocks

Splash blocks shall be as detailed. Reinforcement shall be the manufacturer's standard.

2.9 NOT USED

2.10 MORTAR

Mortar shall be Type S in accordance with the proportion specification of ASTM C 270 except Type S cement-lime mortar proportions shall be 1 part cement, 1/2 part lime and 4-1/2 parts aggregate; Type N cement-lime mortar proportions shall be 1 part cement, 1 part lime and 6 parts aggregate; when masonry cement ASTM C 91 is used the maximum air content shall be limited to 12 percent and performance equal to cement-lime mortar shall be verified. Verification of masonry cement performance shall be based on ASTM C 780 and ASTM C 1072. Mortar for prefaced concrete masonry unit wainscots shall contain aggregates with 100 percent passing the 2.36 mm sieve and 95 percent passing the 1.18 mm sieve. Pointing mortar in showers and kitchens shall contain ammonium stearate, or aluminum tri-stearate, or calcium stearate in an amount equal to 3 percent by weight of cement used. Cement shall have a low alkali content and be of one brand. Aggregates shall be from one source.

2.10.1 Admixtures

In cold weather, a non-chloride based accelerating admixture may be used subject to approval. Accelerating admixture shall be non-corrosive, shall contain less than 0.2 percent chlorides, and shall conform to ASTM C 494, Type C.

2.11 GROUT

Grout shall conform to ASTM C 476. Cement used in grout shall have a low alkali content. Grout slump shall be between 200 and 250 mm (8 and 10 inches). Grout shall be used subject to the limitations of Table III. Proportions shall not be changed and materials with different physical or chemical characteristics shall not be used in grout for the work unless additional evidence is furnished that the grout meets the specified requirements.

2.11.1 Admixtures

In cold weather, a non-chloride based accelerating admixture may be used subject to approval. Accelerating admixture shall be non-corrosive, shall contain less than 0.2 percent chlorides, and shall conform to ASTM C 494, Type C.

2.11.2 Grout Barriers

Grout barriers for vertical cores shall consist of fine mesh wire, fiberglass, or expanded metal.

2.12 ANCHORS, TIES, AND BAR POSITIONERS

Anchors and ties shall be fabricated without drips or crimps and shall be zinc-coated in accordance with ASTM A 153, Class B-2. Steel wire used for anchors and ties shall be fabricated from steel wire conforming to ASTM A 82. Anchors and ties shall be sized to provide a minimum of 16 mm (5/8 inch) mortar cover from either face.

2.12.1 Wire Mesh Ties

Wire mesh for tying 100 mm (4 inch) thick concrete masonry unit partitions to other intersecting masonry partitions shall be 13 mm (1/2 inch) mesh of minimum 16 gauge steel wire. Minimum lengths shall be not less than 300 mm (12 inches).

2.12.2 Wall Ties

Wall ties shall be rectangular-shaped or Z-shaped fabricated of 5 mm (3/16 inch) diameter zinc-coated steel wire. Rectangular wall ties shall be no less than 100 mm (4 inches) wide. Wall ties may also be of a continuous type conforming to paragraph JOINT REINFORCEMENT. Adjustable type wall ties, if approved for use, shall consist of two essentially U-shaped elements fabricated of 5 mm (3/16 inch) diameter zinc-coated steel wire. Adjustable ties shall be of the double pintle to eye type and shall allow a maximum of 13 mm (1/2 inch) eccentricity between each element of the tie. Play between pintle and eye opening shall be not more than 2 mm (1/16 inch). The pintle and eye elements shall be formed so that both can be in the same plane.

2.12.3 Dovetail Anchors

Dovetail anchors shall be of the flexible wire type, 5 mm (3/16 inch) diameter zinc-coated steel wire, triangular shaped, and attached to a 12 gauge or heavier steel dovetail section. These anchors shall be used for anchorage of veneer wythes or composite-wall facings extending over the face of concrete columns, beams, or walls. Cells within vertical planes of these anchors shall be filled solid with grout for full height of walls or partitions, or solid units may be used. Dovetail slots are specified in Section 03300 CAST-IN-PLACE STRUCTURAL CONCRETE.

2.12.4 Adjustable Anchors

Adjustable anchors shall be 5 mm (3/16 inch) diameter steel wire, triangular-shaped. Anchors attached to steel shall be 8 mm (5/16 inch) diameter steel bars placed to provide 2 mm (1/16 inch) play between flexible anchors and structural steel members. Spacers shall be welded to rods and columns. Equivalent welded-on steel anchor rods or shapes standard with the flexible-anchor manufacturer may be furnished when approved. Welds shall be cleaned and given one coat of zinc-rich touch up paint.

2.12.5 Bar Positioners

Bar positioners, used to prevent displacement of reinforcing bars during

the course of construction, shall be factory fabricated from 9 gauge steel wire or equivalent, and coated with a hot-dip galvanized finish. Not more than one wire shall cross the cell.

2.13 JOINT REINFORCEMENT

Joint reinforcement shall be factory fabricated from steel wire conforming to ASTM A 82, welded construction. Tack welding will not be acceptable in reinforcement used for wall ties. Wire shall have zinc coating conforming to ASTM A 153, Class B-2. All wires shall be a minimum of 9 gauge. Reinforcement shall be ladder type design, having one longitudinal wire in the mortar bed of each face shell for hollow units and one wire for solid units. Joint reinforcement shall be placed a minimum of 16 mm cover from either face. The distance between crosswires shall not exceed 400 mm (16 inches). Joint reinforcement for straight runs shall be furnished in flat sections not less than 3 m (10 feet) long. Joint reinforcement shall be provided with factory formed corners and intersections. If approved for use, joint reinforcement may be furnished with adjustable wall tie features.

2.14 REINFORCING STEEL BARS AND RODS

Reinforcing steel bars and rods shall conform to ASTM A 615/A 615M, Grade 60.

2.15 CONTROL JOINT KEYS

Control joint keys shall be a factory fabricated solid section of natural or synthetic rubber (or combination thereof) conforming to ASTM D 2000or polyvinyl chloride conforming to ASTM D 2287. The material shall be resistant to oils and solvents. The control joint key shall be provided with a solid shear section not less than 16 mm (5/8 inch) thick and 10 mm (3/8 inch) thick flanges, with a tolerance of plus or minus 2 mm (1/16 inch). The control joint key shall fit neatly, but without forcing, in masonry unit jamb sash grooves. The control joint key shall be flexible at a temperature of minus 34 degrees C (minus 30 degrees F) after five hours exposure, and shall have a durometer hardness of not less than 70 when tested in accordance with ASTM D 2240.

2.16 EXPANSION-JOINT MATERIALS

Backer rod and sealant shall be adequate to accommodate joint compression equal to 50 percent of the width of the joint. The backer rod shall be compressible rod stock of polyethylene foam, polyurethane foam, butyl rubber foam, or other flexible, nonabsorptive material as recommended by the sealant manufacturer. Sealant shall conform to Section 07900JOINT SEALING.

2.17 INSULATION

2.17.1 Rigid Board-Type Insulation

Rigid board-type insulation shall be extruded polystyrene, polyurethane, or polyisocyanurate. Polystyrene shall conform to ASTM C 578. Polyurethane or polyisocyanurate shall conform to ASTM C 1289, Type I, Class 2, faced with aluminum foil on both sides of the foam. The insulation shall be a standard product and shall be marked with not less than the manufacturer's trademark or name, the specification number, the permeance and R-values.

2.17.1.1 Insulation Thickness and Air Space

The cavity space shall allow for a maximum insulation thickness of 90 mm, (3 1/2 inches), and a minimum air space of 20 mm (3/4 inch).

2.17.1.2 Aged R-Value

The insulation shall provide a minimum aged R-value of 18 for the overall thickness. The aged R-value shall be determined at 24 degrees C (75 degrees F) in accordance with the appropriate referenced specification. The stated R-value of the insulation shall be certified by an independent testing laboratory or certified by an independent Registered Professional Engineer if tests are conducted in the manufacturer's laboratory.

2.17.1.3 Recovered Material

Insulation shall contain the highest practicable percentage of recovered material derived from solid waste (but material reused in the manufacturing process cannot be counted toward the percentage of recovered material). Where two materials have the same price and performance, the one containing the higher recovered material content shall be provided. The polyurethane or polyisocyanurate foam shall have a minimum recovered material content of 9 percent by weight of the core material.

2.17.2 Insulation Adhesive

Insulation adhesive shall be specifically prepared to adhere the insulation to the masonry and, where applicable, to the thru-wall flashing. The adhesive shall not deleteriously affect the insulation, and shall have a record of satisfactory and proven performance for the conditions under which to be used.

2.18 FLASHING

Flashing shall be as specified in Section 07600 SHEET METALWORK, GENERAL.

2.19 WEEP HOLE VENTILATORS

Weephole ventilators shall be prefabricated aluminum grill type vents designed to prevent insect entry with maximum air entry. Ventilators shall be sized to match modular construction with a standard 10 mm (3/8 inch) mortar joint.

PART 3 EXECUTION

3.1 ENVIRONMENTAL REQUIREMENTS

3.1.1 Hot Weather Installation

The following precautions shall be taken if masonry is erected when the ambient air temperature is more than 37 degrees C (99 degrees F) in the shade and the relative humidity is less than 50 percent. All masonry materials shall be shaded from direct sunlight; mortar beds shall be spread no more than 1.2 m (4 feet) ahead of masonry; masonry units shall be set within one minute of spreading mortar; and after erection, masonry shall be protected from direct exposure to wind and sun for 48 hours.

3.1.2 Cold Weather Installation

Before erecting masonry when ambient temperature or mean daily air

temperature falls below 4 degrees C (40 degrees F), a written statement of proposed cold weather construction procedures shall be submitted for approval. The following precautions shall be taken during all cold weather erection.

3.1.2.1 Preparation

Ice or snow formed on the masonry bed shall be thawed by the application of heat. Heat shall be applied carefully until the top surface of the masonry is dry to the touch. Sections of masonry deemed frozen and damaged shall be removed before continuing construction of those sections.

a. Air Temperature 4 to 0 degrees C (40 to 32 Degrees F). Sand or mixing water shall be heated to produce mortar temperatures between 4 degrees C and 49 degrees C (40 degrees F and 120 degrees F).

b. Air Temperature 0 to minus 4 degrees C (32 to 25 Degrees F). Sand and mixing water shall be heated to produce mortar temperatures between 4 degrees C and 49 degrees C (40 degrees F and 120 degrees F). Temperature of mortar on boards shall be maintained above freezing.

c. Air Temperature minus 4 to minus 7 degrees C (25 to 20 Degrees F). Sand and mixing water shall be heated to provide mortar temperatures between 4 degrees C and 49 degrees C (40 degrees F and 120 degrees F). Temperature of mortar on boards shall be maintained above freezing. Sources of heat shall be used on both sides of walls under construction. Windbreaks shall be employed when wind is in excess of 24 km/hour (15 mph).

d. Air Temperature minus 7 degrees C (20 Degrees F) and below. Sand and mixing water shall be heated to provide mortar temperatures between 4 degrees C and 49 degrees C. (40 degrees F) and 120 degrees F. Enclosure and auxiliary heat shall be provided to maintain air temperature above 0 degrees C (32 degrees F). Temperature of units when laid shall not be less than minus 7 degrees C (20 degrees F).

3.1.2.2 Completed Masonry and Masonry Not Being Worked On

a. Mean daily air temperature 4 degrees C to 0 degrees C (40 degrees F to 32 degrees F). Masonry shall be protected from rain or snow for 24 hours by covering with weather-resistive membrane.

b. Mean daily air temperature 0 degrees C to minus 4 degrees C (32 degrees F to 25 degrees F). Masonry shall be completely covered with weather-resistant membrane for 24 hours.

c. Mean Daily Air Temperature minus 4 degrees C to minus 7 degrees C (25 Degrees F to 20 Degrees F). Masonry shall be completely covered with insulating blankets or equally protected for 24 hours.

d. Mean Daily Temperature minus 7 degrees C (20 Degrees F) and Below. Masonry temperature shall be maintained above 0 degrees C (32 degrees F) for 24 hours by enclosure and supplementary heat, by electric heating blankets, infrared heat lamps, or other approved methods.

3.2 LAYING MASONRY UNITS

Masonry units shall be laid in running bond pattern. Facing courses shall be level with back-up courses, unless the use of adjustable ties has been approved in which case the tolerances shall be plus or minus 13 mm (1/2 inch). Each unit shall be adjusted to its final position while mortar is still soft and plastic. Units that have been disturbed after the mortar has stiffened shall be removed, cleaned, and relaid with fresh mortar. Air spaces, cavities, chases, expansion joints, and spaces to be grouted shall be kept free from mortar and other debris. Units used in exposed masonry surfaces shall be selected from those having the least amount of chipped edges or other imperfections detracting from the appearance of the finished work. Vertical joints shall be kept plumb. Units being laid and surfaces to receive units shall be free of water film and frost. Solid units shall be laid in a nonfurrowed full bed of mortar. Mortar for veneer wythes shall be beveled and sloped toward the center of the wythe from the cavity side. Units shall be shoved into place so that the vertical joints are tight. Vertical joints of brick and the vertical face shells of concrete masonry units, except where indicated at control, expansion, and isolation joints, shall be completely filled with mortar. Mortar will be permitted to protrude up to 13 mm (1/2 inch) into the space or cells to be grouted. Means shall be provided to prevent mortar from dropping into the space below. In double wythe construction, the inner wythe may be brought up not more than 400 mm (16 inches) ahead of the outer wythe. Collar joints shall be filled with mortar or grout during the laying of the facing wythe, and filling shall not lag the laying of the facing wythe by more than 200 mm (8 inches).

3.2.1 Surface Preparation

Surfaces upon which masonry is placed shall be cleaned of laitance, dust, dirt, oil, organic matter, or other foreign materials and shall be slightly roughened to provide a surface texture with a depth of at least 3 mm (1/8 inch). Sandblasting shall be used, if necessary, to remove laitance from pores and to expose the aggregate.

3.2.2 Forms and Shores

Forms and shores shall be sufficiently rigid to prevent deflections which may result in cracking or other damage to supported masonry and sufficiently tight to prevent leakage of mortar and grout. Supporting forms and shores shall not be removed in less than 10 days.

3.2.3 Concrete Masonry Units

Units in piers, pilasters, columns, starting courses on footings, solid foundation walls, lintels, and beams, and where cells are to be filled with grout shall be full bedded in mortar under both face shells and webs. Other units shall be full bedded under both face shells. Head joints shall be filled solidly with mortar for a distance in from the face of the unit not less than the thickness of the face shell. Foundation walls below grade shall be grouted solid. Jamb units shall be of the shapes and sizes to conform with wall units. Solid units may be incorporated in the masonry work where necessary to fill out at corners, gable slopes, and elsewhere as approved. Double walls shall be stiffened at wall-mounted plumbing fixtures by use of strap anchors, two above each fixture and two below each fixture, located to avoid pipe runs, and extending from center to center of the double wall. Walls and partitions shall be adequately reinforced for support of wall-hung plumbing fixtures when chair carriers are not specified.

3.2.4 Clay or Shale Brick Units

Brick facing shall be laid with the better face exposed. Brick shall be laid in running bond with each course bonded at corners, unless otherwise indicated. Molded brick shall be laid with the frog side down. Brick that is cored, recessed, or has other deformations may be used in sills, treads, soldier courses, except where deformations will be exposed to view.

3.2.4.1 Wetting of Units

Wetting of clay, shale brick, or hollow brick units having an initial rate of absorption of more than 0.155 gm per minute per square cm (1 gm per minute per square inch) of bed surface shall be in conformance with ASTM C 67. The method of wetting shall ensure that each unit is nearly saturated but surface dry when laid.

3.2.4.2 Solid Units

Bed, head, and collar joints shall be completely filled with mortar.

3.2.4.3 Hollow Units

Hollow units shall be laid as specified for concrete masonry units.

3.2.5 Tolerances

Masonry shall be laid plumb, true to line, with courses level. Bond pattern shall be kept plumb throughout. Corners shall be square unless noted otherwise. Except for walls constructed of prefaced concrete masonry units, masonry shall be laid within the following tolerances (plus or minus unless otherwise noted):

TABLE II

TOLERANCES

Variation from the plumb in the lines and surfaces of columns, walls and arises	
In adjacent masonry units	3 mm
In 3 m	6 mm
In 6 m	10 mm
In 12 m or more	13 mm
Variations from the plumb for external corners, expansion joints, and other conspicuous lines	
In 6 m	6 mm
In 12 m or more	13 mm
Variations from the level for exposed lintels, sills, parapets, horizontal grooves, and other conspicuous lines	
In 6 m	6 mm

TOLERANCES

In 12 m or more	13 mm
Variation from level for bed joints and top surfaces of bearing walls	
In 3 m	6 mm
In 12 m or more	13 mm
Variations from horizontal lines	
In 3 m	6 mm
In 6 m	10 mm
In 12 m or more	13 mm
Variations in cross sectional dimensions of columns and in thickness of walls	
Minus	6 mm
Plus	13 mm

3.2.6 Cutting and Fitting

Full units of the proper size shall be used wherever possible, in lieu of cut units. Cutting and fitting, including that required to accommodate the work of others, shall be done by masonry mechanics using power masonry saws. Concrete masonry units may be wet or dry cut. Wet cut units, before being placed in the work, shall be dried to the same surface-dry appearance as uncut units being laid in the wall. Cut edges shall be clean, true and sharp. Openings in the masonry shall be made carefully so that wall plates, cover plates or escutcheons required by the installation will completely conceal the openings and will have bottoms parallel with the masonry bed joints. Reinforced masonry lintels shall be provided above openings over 300 mm (12 inches) wide for pipes, ducts, cable trays, and other wall penetrations, unless steel sleeves are used.

3.2.7 Jointing

Joints shall be tooled when the mortar is thumbprint hard. Horizontal joints shall be tooled last. Joints shall be brushed to remove all loose and excess mortar. Mortar joints shall be finished as follows:

3.2.7.1 Flush Joints

Joints in concealed masonry surfaces and joints at electrical outlet boxes in wet areas shall be flush cut. Flush cut joints shall be made by cutting off the mortar flush with the face of the wall. Joints in unparged masonry walls below grade shall be pointed tight. Flush joints for architectural units, such as fluted units, shall completely fill both the head and bed joints.

3.2.7.2 Tooled Joints

Joints in exposed exterior and interior masonry surfaces shall be tooled slightly concave. Joints shall be tooled with a jointer slightly larger

than the joint width so that complete contact is made along the edges of the unit. Tooling shall be performed so that the mortar is compressed and the joint surface is sealed. Jointer of sufficient length shall be used to obtain a straight and true mortar joint.

3.2.7.3 Door and Window Frame Joints

On the exposed interior side of exterior frames, joints between frames and abutting masonry walls shall be raked to a depth of 10 mm (3/8 inch). On the exterior side of exterior frames, joints between frames and abutting masonry walls shall be raked to a depth of 10 mm (3/8 inch).

3.2.8 Joint Widths

Joint widths shall be as follows:

3.2.8.1 Concrete Masonry Units

Concrete masonry units shall have 10 mm (3/8 inch) joints, except for prefaced concrete masonry units.

3.2.8.2 Prefaced Concrete Masonry Units

Prefaced concrete masonry units shall have a joint width of 10 mm (3/8 inch) wide on unfaced side and not less than 5 mm (3/16 inch) nor more than 6 mm (1/4 inch) wide on prefaced side.

3.2.8.3 Brick

Brick joint widths shall be the difference between the actual and nominal dimensions of the brick in either height or length. Brick expansion joint widths shall be as shown.

3.2.9 Embedded Items

Spaces around built-in items shall be filled with mortar. Openings around flush-mount electrical outlet boxes in wet locations shall be pointed with mortar. Anchors, ties, wall plugs, accessories, flashing, pipe sleeves and other items required to be built-in shall be embedded as the masonry work progresses. Anchors, ties and joint reinforcement shall be fully embedded in the mortar. Cells receiving anchor bolts and cells of the first course below bearing plates shall be filled with grout.

3.2.10 Unfinished Work

Unfinished work shall be stepped back for joining with new work. Toothing may be resorted to only when specifically approved. Loose mortar shall be removed and the exposed joints shall be thoroughly cleaned before laying new work.

3.2.11 Masonry Wall Intersections

Each course shall be masonry bonded at corners and elsewhere as shown. Masonry walls shall be anchored or tied together at corners and intersections with bond beam reinforcement and prefabricated corner or tee pieces of joint reinforcement as shown.

3.2.12 Partitions

Partitions shall be continuous from floor to underside of floor or roof deck where shown. Openings in firewalls around joists or other structural members shall be filled as indicated or approved. Where suspended ceilings on both sides of partitions are indicated, the partitions other than those shown to be continuous may be stopped approximately 100 mm (4 inches) above the ceiling level. An isolation joint shall be placed in the intersection between partitions and structural or exterior walls as shown. Interior partitions having 100 mm (4 inch) nominal thick units shall be tied to intersecting partitions of 100 mm (4 inch) units, 125 mm (5 inches) into partitions of 150 mm (6 inch) units, and 175 (7 inches) into partitions of 200 mm (8 inch) or thicker units. Cells within vertical plane of ties shall be filled solid with grout for full height of partition or solid masonry units may be used. Interior partitions having masonry walls over 100 mm (4 inches) thick shall be tied together with joint reinforcement. Partitions containing joint reinforcement shall be provided with prefabricated pieces at corners and intersections or partitions.

3.3 ANCHORED VENEER CONSTRUCTION

The inner and outer wythes shall be completely separated by a continuous airspace as shown on the drawings. Both the inner and the outer wythes shall be laid up together except when adjustable joint reinforcement assemblies are approved for use. When both wythes are not brought up together, through-wall flashings shall be protected from damage until they are fully enclosed in the wall. The airspace between the wythes shall be kept clear and free of mortar droppings by temporary wood strips laid on the wall ties and carefully lifted out before placing the next row of ties. A coarse gravel or drainage material shall be placed behind the weep holes in the cavity to a minimum depth of 100 mm (4 inches) of coarse aggregate or 250 mm (10 inches) of drainage material to keep mortar droppings from plugging the weep holes.

3.4 WEEP HOLES

Weep holes shall be provided not more than 600 mm (24 inches) on centers in mortar joints of the exterior wythe above wall flashing, over foundations, bond beams, and any other horizontal interruptions of the cavity. Weep holes shall be constructed using weep hole ventilators. Other approved methods may be used for providing weep holes. Weep holes shall be kept free of mortar and other obstructions.

3.5 COMPOSITE WALLS

Masonry wythes shall be tied together with joint reinforcement or with unit wall ties. Facing shall be anchored to concrete backing with wire dovetail anchors set in slots built in the face of the concrete as specified in Section 03300 CAST-IN-PLACE STRUCTURAL CONCRETE. The facing wythe shall be anchored or tied to the backup at a maximum spacing of 400 mm (16 inches) on center vertically and 600 mm (24 inches) on center horizontally. Unit ties shall be spaced not over 600 mm (24 inches) on centers horizontally, in courses not over 400 mm (16 inches) apart vertically, staggered in alternate courses. Ties shall be laid not closer than 16 mm (5/8 inch) to either masonry face. Ties shall not extend through control joints. Collar joints between masonry facing and masonry backup shall be filled solidly with grout.

3.6 NOT USED

3.7 NOT USED

3.8 NOT USED

3.9 MORTAR

Mortar shall be mixed in a mechanically operated mortar mixer for at least 3 minutes, but not more than 5 minutes. Measurement of ingredients for mortar shall be by volume. Ingredients not in containers, such as sand, shall be accurately measured by the use of measuring boxes. Water shall be mixed with the dry ingredients in sufficient amount to provide a workable mixture which will adhere to the vertical surfaces of masonry units. Mortar that has stiffened because of loss of water through evaporation shall be retempered by adding water to restore the proper consistency and workability. Mortar that has reached its initial set or that has not been used within 2-1/2 hours after mixing shall be discarded.

3.10 REINFORCING STEEL

Reinforcement shall be cleaned of loose, flaky rust, scale, grease, mortar, grout, or other coating which might destroy or reduce its bond prior to placing grout. Bars with kinks or bends not shown on the drawings shall not be used. Reinforcement shall be placed prior to grouting. Unless otherwise indicated, vertical wall reinforcement shall extend to within 50 mm (2 inches) of tops of walls.

3.10.1 Positioning Bars

Vertical bars shall be accurately placed within the cells at the positions indicated on the drawings. A minimum clearance of 13 mm (1/2 inch) shall be maintained between the bars and masonry units. Minimum clearance between parallel bars shall be one diameter of the reinforcement. Vertical reinforcing may be held in place using bar positioners located near the ends of each bar and at intermediate intervals of not more than 192 diameters of the reinforcement. Column and pilaster ties shall be wired in position around the vertical steel. Ties shall be in contact with the vertical reinforcement and shall not be placed in horizontal bed joints.

3.10.2 Splices

Bars shall be lapped a minimum of 48 diameters of the reinforcement. Welded or mechanical connections shall develop at least 125 percent of the specified yield strength of the reinforcement.

3.11 JOINT REINFORCEMENT

Joint reinforcement shall be installed at 400 mm (16 inches) on center or as indicated. Reinforcement shall be lapped not less than 150 mm (6 inches). Prefabricated sections shall be installed at corners and wall intersections. The longitudinal wires of joint reinforcement shall be placed to provide not less than 16 mm (5/8 inch) cover to either face of the unit.

3.12 PLACING GROUT

Cells containing reinforcing bars shall be filled with grout. Hollow masonry units in walls or partitions supporting plumbing, heating, or other mechanical fixtures, voids at door and window jambs, and other indicated spaces shall be filled solid with grout. Cells under lintel bearings on each side of openings shall be filled solid with grout for full height of

openings. Walls below grade, lintels, and bond beams shall be filled solid with grout. Units other than open end units may require grouting each course to preclude voids in the units. Grout not in place within 1-1/2 hours after water is first added to the batch shall be discarded. Sufficient time shall be allowed between grout lifts to preclude displacement or cracking of face shells of masonry units. If blowouts, flowouts, misalignment, or cracking of face shells should occur during construction, the wall shall be torn down and rebuilt.

3.12.1 Vertical Grout Barriers for Fully Grouted Walls

Grout barriers shall be provided not more than 10 m (30 feet) apart, or as required, to limit the horizontal flow of grout for each pour.

3.12.2 Horizontal Grout Barriers

Grout barriers shall be embedded in mortar below cells of hollow units receiving grout.

3.12.3 Grout Holes and Cleanouts

3.12.3.1 Grout Holes

Grouting holes shall be provided in slabs, spandrel beams, and other in-place overhead construction. Holes shall be located over vertical reinforcing bars or as required to facilitate grout fill in bond beams. Additional openings spaced not more than 400 mm (16 inches) on centers shall be provided where grouting of all hollow unit masonry is indicated. Openings shall not be less than 100 mm (4 inches) in diameter or 75 by 100 mm (3 by 4 inches) in horizontal dimensions. Upon completion of grouting operations, grouting holes shall be plugged and finished to match surrounding surfaces.

3.12.3.2 Cleanouts for Hollow Unit Masonry Construction

Cleanout holes shall be provided at the bottom of every pour in cores containing vertical reinforcement when the height of the grout pour exceeds 1.5 m (5 feet). Where all cells are to be grouted, cleanout courses shall be constructed using bond beam units in an inverted position to permit cleaning of all cells. Cleanout holes shall be provided at a maximum spacing of 800 mm (32 inches) where all cells are to be filled with grout. A new series of cleanouts shall be established if grouting operations are stopped for more than 4 hours. Cleanouts shall not be less than 75 by 100 mm (3 by 4 inch) openings cut from one face shell. Manufacturer's standard cutout units may be used at the Contractor's option. Cleanout holes shall not be closed until masonry work, reinforcement, and final cleaning of the grout spaces have been completed and inspected. For walls which will be exposed to view, cleanout holes shall be closed in an approved manner to match surrounding masonry.

3.12.3.3 Cleanouts for Solid Unit Masonry Construction

Cleanouts for construction of walls consisting of a grout filled cavity between solid masonry wythes shall be provided at the bottom of every pour by omitting every other masonry unit from one wythe. A new series of cleanouts shall be established if grouting operations are stopped for more than 4 hours. Cleanout holes shall not be plugged until masonry work, reinforcement, and final cleaning of the grout spaces have been completed and inspected. For walls which will be exposed to view, cleanout holes

shall be closed in an approved manner to match surrounding masonry.

3.12.4 Grouting Equipment

3.12.4.1 Grout Pumps

Pumping through aluminum tubes will not be permitted. Pumps shall be operated to produce a continuous stream of grout without air pockets, segregation, or contamination. Upon completion of each day's pumping, waste materials and debris shall be removed from the equipment, and disposed of outside the masonry.

3.12.4.2 Vibrators

Internal vibrators shall maintain a speed of not less than 5,000 impulses per minute when submerged in the grout. At least one spare vibrator shall be maintained at the site at all times. Vibrators shall be applied at uniformly spaced points not further apart than the visible effectiveness of the machine. Duration of vibration shall be limited to time necessary to produce satisfactory consolidation without causing segregation.

3.12.5 Grout Placement

Masonry shall be laid to the top of a pour before placing grout. Grout shall not be placed in two-wythe solid unit masonry cavity until mortar joints have set for at least 3 days during hot weather and 5 days during cold damp weather. Grout shall not be placed in hollow unit masonry until mortar joints have set for at least 24 hours. Grout shall be placed using a hand bucket, concrete hopper, or grout pump to completely fill the grout spaces without segregation of the aggregates. Vibrators shall not be inserted into lower pours that are in a semi-solidified state. The height of grout pours and type of grout used shall be limited by the dimensions of grout spaces as indicated in Table III. Low-lift grout methods may be used on pours up to and including 1.5 m (5 feet) in height. High-lift grout methods shall be used on pours exceeding 1.5 m (5 feet) in height.

3.12.5.1 Low-Lift Method

Grout shall be placed at a rate that will not cause displacement of the masonry due to hydrostatic pressure of the grout. Mortar protruding more than 13 mm (1/2 inch) into the grout space shall be removed before beginning the grouting operation. Grout pours 300 mm (12 inches) or less in height shall be consolidated by mechanical vibration or by puddling. Grout pours over 300 mm (12 inches) in height shall be consolidated by mechanical vibration and reconsolidated by mechanical vibration after initial water loss and settlement has occurred. Vibrators shall not be inserted into lower pours that are in a semi-solidified state. Low-lift grout shall be used subject to the limitations of Table III.

3.12.5.2 High-Lift Method

Mortar droppings shall be cleaned from the bottom of the grout space and from reinforcing steel. Mortar protruding more than 6 mm (1/4 inch) into the grout space shall be removed by dislodging the projections with a rod or stick as the work progresses. Reinforcing, bolts, and embedded connections shall be rigidly held in position before grouting is started. CMU units shall not be pre-wetted. Grout, from the mixer to the point of deposit in the grout space shall be placed as rapidly as practical by pumping and placing methods which will prevent segregation of the mix and

cause a minimum of grout splatter on reinforcing and masonry surfaces not being immediately encased in the grout lift. The individual lifts of grout shall be limited to 1.2 m (4 feet) in height. The first lift of grout shall be placed to a uniform height within the pour section and vibrated thoroughly to fill all voids. This first vibration shall follow immediately behind the pouring of the grout using an approved mechanical vibrator. After a waiting period sufficient to permit the grout to become plastic, but before it has taken any set, the succeeding lift shall be poured and vibrated 300 to 450 mm (12 to 18 inches) into the preceding lift. If the placing of the succeeding lift is going to be delayed beyond the period of workability of the preceding, each lift shall be reconsolidated by reworking with a second vibrator as soon as the grout has taken its settlement shrinkage. The waiting, pouring, and reconsolidation steps shall be repeated until the top of the pour is reached. The top lift shall be reconsolidated after the required waiting period. The high-lift grouting of any section of wall between vertical grout barriers shall be completed to the top of a pour in one working day unless a new series of cleanout holes is established and the resulting horizontal construction joint cleaned. High-lift grout shall be used subject to the limitations in Table III.

TABLE III

POUR HEIGHT AND TYPE OF GROUT FOR VARIOUS GROUT SPACE DIMENSIONS

Maximum Grout Pour Height (m) (4)	Grout Type	Grouting Procedure	Minimum Dimensions of the Total Clear Areas Within Grout Spaces and Cells (mm) (1,2) Multiwythe Masonry (3)	Hollow-unit Masonry
0.3	Fine	Low Lift	20	40 x 50
1.5	Fine	Low Lift	50	50 x 75
2.4	Fine	High Lift	50	50 x 75
3.6	Fine	High Lift	65	65 x 75
7.3	Fine	High Lift	75	75 x 75
0.3	Coarse	Low Lift	40	40 x 75
1.5	Coarse	Low Lift	50	65 x 75
2.4	Coarse	High Lift	50	75 x 75
3.6	Coarse	High Lift	65	75 x 75
7.3	Coarse	High Lift	75	75 x 100

Notes:

(1) The actual grout space or cell dimension must be larger than the sum of the following items:
a) The required minimum dimensions of total clear areas given in the table above;
b) The width of any mortar projections within the space;
c) The horizontal projections of the diameters of the horizontal reinforcing bars within a cross section of the grout space or cell.

(2) The minimum dimensions of the total clear areas shall be made up of one or more open areas, with at least one area being 20 mm (3/4 inch) or greater in width.

(3) For grouting spaces between masonry wythes.

(4) Where only cells of hollow masonry units containing reinforcement are grouted, the maximum height of the pour shall not exceed the distance between horizontal bond beams.

3.13 BOND BEAMS

Bond beams shall be filled with grout and reinforced as indicated on the drawings. Grout barriers shall be installed under bond beam units to retain the grout as required. Reinforcement shall be continuous, including around corners, except through control joints or expansion joints, unless otherwise indicated on the drawings. Where splices are required for continuity, reinforcement shall be lapped 48 bar diameters. A minimum clearance of 13 mm (1/2 inch) shall be maintained between reinforcement and interior faces of units.

3.14 CONTROL JOINTS

Control joints shall be provided as indicated and shall be constructed by using mortar to fill the head joint in accordance with the details shown on the drawings. Sash jamb units shall have a 19 by 19 mm (3/4 by 3/4 inch) groove near the center at end of each unit. The vertical mortar joint at control joint locations shall be continuous, including through all bond beams. This shall be accomplished by utilizing half blocks in alternating courses on each side of the joint. The control joint key shall be interrupted in courses containing continuous bond beam steel. In single wythe exterior masonry walls, the exterior control joints shall be raked to a depth of 20 mm (3/4 inch); backer rod and sealant shall be installed in accordance with Section 07900 JOINT SEALING. Exposed interior control joints shall be raked to a depth of 6 mm (1/4 inch). Concealed control joints shall be flush cut.

3.15 BRICK EXPANSION JOINTS AND CONCRETE MASONRY VENEER JOINTS

Brick expansion joints and concrete masonry veneer joints shall be provided and constructed as shown on the drawings. Joints shall be kept free of mortar and other debris.

3.16 SHELF ANGLES

Shelf angles shall be adjusted as required to keep the masonry level and at the proper elevation. Shelf angles shall be galvanized. Shelf angles shall be provided in sections not longer than 3 m (10 feet) and installed with a 6 mm (1/4 inch) gap between sections. Shelf angles shall be mitered and welded at building corners with each angle not shorter than 1.2 m (4 feet), unless limited by wall configuration.

3.17 LINTELS

3.17.1 Masonry Lintels

Masonry lintels shall be constructed with lintel units filled solid with grout in all courses and reinforced with a minimum of two No. 4 bars in the bottom course unless otherwise indicated on the drawings. Lintel reinforcement shall extend beyond each side of masonry opening 40 bar diameters or 600 mm, whichever is greater. Reinforcing bars shall be supported in place prior to grouting and shall be located 15 mm above the bottom inside surface of the lintel unit.

3.17.2 Precast Concrete and Steel Lintels

Precast concrete and steel lintels shall be as shown on the drawings. Lintels shall be set in a full bed of mortar with faces plumb and true. Steel and precast lintels shall have a minimum bearing length of 200 mm (8 inches) unless otherwise indicated on the drawings.

3.18 SILLS AND COPINGS

Sills and copings shall be set in a full bed of mortar with faces plumb and true.

3.19 ANCHORAGE TO CONCRETE AND STRUCTURAL STEEL

3.19.1 Anchorage to Concrete

Anchorage of masonry to the face of concrete columns, beams, or walls shall be with dovetail anchors spaced not over 400 mm (16 inches) on centers vertically and 600 mm (24 inches) on center horizontally.

3.19.2 Anchorage to Structural Steel

Masonry shall be anchored to vertical structural steel framing with adjustable steel wire anchors spaced not over 400 mm (16 inches) on centers vertically, and if applicable, not over 600 mm (24 inches) on centers horizontally.

3.20 PARGING

The outside face of below-grade exterior concrete-masonry unit walls enclosing usable rooms and spaces, except crawl spaces, shall be parged with type S mortar. Parging shall not be less than 13 mm (1/2 inch) thick troweled to a smooth dense surface so as to provide a continuous unbroken shield from top of footings to a line 150 mm (6 inches) below adjacent finish grade, unless otherwise indicated. Parging shall be coved at junction of wall and footing. Parging shall be damp-cured for 48 hours or more before backfilling. Parging shall be protected from freezing temperatures until hardened.

3.21 INSULATION

Anchored veneer walls shall be insulated, where shown, by installing board-type insulation on the cavity side of the inner wythe. Board type insulation shall be applied directly to the masonry or thru-wall flashing with adhesive. Insulation shall be neatly fitted between obstructions without impaling of insulation on ties or anchors. The insulation shall be applied in parallel courses with vertical joints breaking midway over the course below and shall be applied in moderate contact with adjoining units without forcing, and shall be cut to fit neatly against adjoining surfaces.

3.22 SPLASH BLOCKS

Splash blocks shall be located as shown.

3.23 POINTING AND CLEANING

After mortar joints have attained their initial set, but prior to hardening, mortar and grout daubs or splashings shall be completely removed from masonry-unit surfaces that will be exposed or painted. Before

completion of the work, defects in joints of masonry to be exposed or painted shall be raked out as necessary, filled with mortar, and tooled to match existing joints. Immediately after grout work is completed, scum and stains which have percolated through the masonry work shall be removed using a high pressure stream of water and a stiff bristled brush. Masonry surfaces shall not be cleaned, other than removing excess surface mortar, until mortar in joints has hardened. Masonry surfaces shall be left clean, free of mortar daubs, dirt, stain, and discoloration, including scum from cleaning operations, and with tight mortar joints throughout. Metal tools and metal brushes shall not be used for cleaning.

3.23.1 Concrete Masonry Unit and Concrete Brick Surfaces

Exposed concrete masonry unit and concrete brick surfaces shall be dry-brushed at the end of each day's work and after any required pointing, using stiff-fiber bristled brushes.

3.23.2 Clay or Shale Brick Surfaces

Exposed clay or shale brick masonry surfaces shall be cleaned as necessary to obtain surfaces free of stain, dirt, mortar and grout daubs, efflorescence, and discoloration or scum from cleaning operations. After cleaning, the sample panel of similar material shall be examined for discoloration or stain as a result of cleaning. If the sample panel is discolored or stained, the method of cleaning shall be changed to assure that the masonry surfaces in the structure will not be adversely affected. The exposed masonry surfaces shall be water-soaked and then cleaned with a solution proportioned 30 milliliters (1/2 cup) trisodium phosphate and 30 milliliters (1/2 cup) laundry detergent to 1 liter (one gallon) of water or cleaned with a proprietary masonry cleaning agent specifically recommended for the color and texture by the clay products manufacturer. The solution shall be applied with stiff fiber brushes, followed immediately by thorough rinsing with clean water. Proprietary cleaning agents shall be used in conformance with the cleaning product manufacturer's printed recommendations. Efflorescence shall be removed in conformance with the brick manufacturer's recommendations.

3.24 BEARING PLATES

Bearing plates for beams, joists, joist girders and similar structural members shall be set to the proper line and elevation with damp-pack bedding mortar, except where non-shrink grout is indicated. Bedding mortar and non-shrink grout shall be as specified in Section 03300CAST-IN-PLACE STRUCTURAL CONCRETE.

3.25 PROTECTION

Facing materials shall be protected against staining. Top of walls shall be covered with nonstaining waterproof covering or membrane when work is not in progress. Covering of the top of the unfinished walls shall continue until the wall is waterproofed with a complete roof or parapet system. Covering shall extend a minimum of 600 mm (2 feet) down on each side of the wall and shall be held securely in place. Before starting or resuming, top surface of masonry in place shall be cleaned of loose mortar and foreign material.

3.26 TEST REPORTS

3.26.1 Field Testing of Mortar

At least three specimens of mortar shall be taken each day. A layer of mortar 13 to 16 mm (1/2 to 5/8 inch) thick shall be spread on the masonry units and allowed to stand for one minute. The specimens shall then be prepared and tested for compressive strength in accordance with ASTM C 780.

3.26.2 Field Testing of Grout

Field sampling and testing of grout shall be in accordance with the applicable provisions of ASTM C 1019. A minimum of three specimens of grout per day shall be sampled and tested. Each specimen shall have a minimum ultimate compressive strength of 13.8 MPa (2000 psi) at 28 days.

3.26.3 Efflorescence Test

Brick which will be exposed to weathering shall be tested for efflorescence. Tests shall be scheduled far enough in advance of starting masonry work to permit retesting if necessary. Sampling and testing shall conform to the applicable provisions of ASTM C 67. Units meeting the definition of "effloresced" will be subject to rejection.

3.26.4 Prism Tests

At least one prism test sample shall be made for each 465 square meters of wall but not less than three such samples shall be made for any building. Three prisms shall be used in each sample. Prisms shall be tested in accordance with ASTM E 447. Seven-day tests may be used provided the relationship between the 7- and 28-day strengths of the masonry is established by the tests of the materials used. Compressive strength shall not be less than 55 MPa (8000 psi) at 28 days. If the compressive strength of any prism falls below the specified value by more than 3.5 MPa, (500 psi), steps shall be taken to assure that the load-carrying capacity of the structure is not jeopardized. If the likelihood of low-strength masonry is confirmed and computations indicate that the load-carrying capacity may have been significantly reduced, tests of cores drilled, or prisms sawed, from the area in question may be required. In such case, three specimens shall be taken for each prism test more than 3.5 MPa (500 psi) below the specified value. Masonry in the area in question shall be considered structurally adequate if the average compressive strength of three specimens is equal to at least 85 percent of the specified value, and if the compressive strength of no single specimen is less than 75 percent of the specified value. Additional testing of specimens extracted from locations represented by erratic core or prism strength test results shall be permitted.

-- End of Section --

SECTION 05120

STRUCTURAL STEEL

PART 1 GENERAL

1.1 REFERENCES

The publications listed below form a part of this specification to the extent referenced. The publications are referred to in the text by basic designation only.

AMERICAN INSTITUTE OF STEEL CONSTRUCTION (AISC)

AISC ASD Manual	(1989) Manual of Steel Construction Allowable Stress Design
AISC ASD/LRFD Vol II	(1992) Manual of Steel Construction Vol II: Connections

AMERICAN SOCIETY FOR TESTING AND MATERIALS (ASTM)

ASTM A 6/A 6M	(1996b) General Requirements for Rolled Structural Steel Bars, Plates, Shapes, and Sheet Piling
ASTM A 36/A 36M	(1996) Carbon Structural Steel
ASTM A 53	(1996) Pipe, Steel, Black and Hot-Dipped, Zinc-Coated, Welded and Seamless
ASTM A 307	(1994) Carbon Steel Bolts and Studs, 60 000 PSI Tensile Strength
ASTM A 325M	(1993) High-Strength Bolts for Structural Steel Joints (Metric)
ASTM A 500	(1993) Cold-Formed Welded and Seamless Carbon Steel Structural Tubing in Rounds and Shapes
ASTM A 563M	(1993) Carbon and Alloy Steel Nuts (Metric)
ASTM A 572/A 572M	(1994c) High-Strength Low-Alloy Columbium-Vanadium Structural Steel
ASTM F 436M	(1993) Hardened Steel Washers (Metric)
ASTM F 844	(1990) Washers, Steel, Plain (Flat), Unhardened for General Use
ASTM F 959	(1996) Compressible-Washer-Type Direct Tension Indicators for Use with Structural Fasteners

AMERICAN SOCIETY OF MECHANICAL ENGINEERS (ASME)

ASME B18.21.1	(1994) Lock Washers (Inch Series)
ASME B46.1	(1995) Surface Texture (Surface Roughness, Waviness, and Lay)

AMERICAN WELDING SOCIETY (AWS)

AWS A2.4	(1993) Standard Symbols for Welding, Brazing and Nondestructive Examination
AWS D1.1	(1996) Structural Welding Code - Steel

STEEL STRUCTURES PAINTING COUNCIL (SSPC)

SSPC Paint 25	(1991) Red Iron Oxide, Zinc Oxide, Raw Linseed Oil and Alkyd Primer (without Lead and Chromate Pigments)

1.2 GENERAL REQUIREMENTS

Structural steel fabrication and erection shall be performed by an organization experienced in structural steel work of equivalent magnitude. The Contractor shall be responsible for correctness of detailing, fabrication, and for the correct fitting of structural members. Connections, for any part of the structure not shown on the contract drawings, shall be considered simple shear connections and shall be designed and detailed in accordance with pertinent provisions of AISC ASD Manual Vol II. Substitution of sections or modification of connection details will not be accepted unless approved by the Contracting Officer. AISC ASD Manual and AISC ASD/LRFD Vol II shall govern the work. Welding shall be in accordance with AWS D1.1. High-strength bolting shall be in accordance with AISC ASD Manual.

1.3 SUBMITTALS

The following shall be submitted in accordance with Section 01300 SUBMITTAL PROCEDURES:

Drawings

Structural Steel System; Structural Connections.

Shop and erection details including members (with their connections) not shown on the contract drawings. Welds shall be indicated by standard welding symbols in accordance with AWS A2.4.

Statements

Erection

Prior to erection, erection plan of the structural steel framing describing all necessary temporary supports, including the sequence of installation and removal.

Certificates

Mill Test Reports

Certified copies of mill test reports for structural steel, structural bolts, nuts, washers and other related structural steel items, including attesting that the structural steel furnished contains no less than 25 percent recycled scrap steel and meets the requirements specified herein, prior to the installation.

Welder Qualifications

Certified copies of welder qualifications test records showing qualification in accordance with AWS D1.1.

Fabrication

A copy of the AISC certificate indicating that the fabrication plant meets the specified structural steelwork category.

1.4 STORAGE

Material shall be stored out of contact with the ground in such manner and location as will minimize deterioration.

PART 2 PRODUCTS

2.1 STRUCTURAL STEEL

2.1.1 Carbon Grade Steel

Carbon grade steel shall conform to ASTM A 36/A 36M.

2.1.2 High-Strength Low-Alloy Steel

High-strength low-alloy steel shall conform to ASTM A 572/A 572M, Grade 345.

2.2 STRUCTURAL TUBING

Structural tubing shall conform to ASTM A 500, Grade B.

2.3 STEEL PIPE

Steel pipe shall conform to ASTM A 53, Type E, Grade B.

2.4 NOT USED

2.5 HIGH STRENGTH BOLTS AND NUTS

High strength bolts shall conform to ASTM A 325M , Type 1 with carbon steel nuts conforming to ASTM A 563M, Grade C.

2.6 CARBON STEEL BOLTS AND NUTS

Carbon steel bolts shall conform to ASTM A 307, Grade A with carbon steel nuts conforming to ASTM A 563M , Grade A.

2.7 NUTS DIMENSIONAL STYLE

Carbon steel nuts shall be Heavy Hex style when used with ASTM A 307 bolts or Heavy Hex style when used with ASTM A 325M bolts.

2.8 WASHERS

Plain washers shall conform to ASTM F 844. Other types, when required, shall conform to ASME B18.21.1, ASTM F 436M or ASTM F 959.

2.9 PAINT

Paint shall conform to SSPC Paint 25.

PART 3 EXECUTION

3.1 FABRICATION

Fabrication shall be in accordance with the applicable provisions of AISC ASD Manual. Fabrication and assembly shall be done in the shop to the greatest extent possible. The fabricating plant shall be certified under the AISC quality certification program for Category I structural steelwork. Compression joints depending on contact bearing shall have a surface roughness not in excess of 13 micrometer as determined by ASME B46.1, and ends shall be square within the tolerances for milled ends specified in ASTM A 6/A 6M. Structural steelwork, except surfaces of steel to be encased in concrete, surfaces to be field welded, surfaces to be fireproofed, and contact surfaces of friction-type high-strength bolted connections shall be prepared for painting in accordance with AISC ASD Manual and primed with the specified paint.

3.2 ERECTION

Erection of structural steel shall be in accordance with the applicable provisions of AISC ASD Manual.

3.2.1 Structural Connections

Anchor bolts and other connections between the structural steel and foundations shall be provided and shall be properly located and built into connecting work. Field welded structural connections shall be completed before load is applied.

3.2.2 Base Plates and Bearing Plates

Column base plates for columns and bearing plates for beams, girders, and similar members shall be provided. Base plates and bearing plates shall be provided with full bearing after the supported members have been plumbed and properly positioned, but prior to placing superimposed loads. Separate setting plates under column base plates will not be permitted. The area under the plate shall be damp-packed solidly with bedding mortar, except where nonshrink grout is indicated on the drawings. Bedding mortar and grout shall be as specified in Section 03300 CAST-IN-PLACE STRUCTURAL CONCRETE.

3.2.3 Field Priming

After erection, the field bolt heads and nuts, field welds, and any abrasions in the shop coat shall be cleaned and primed with paint of the same quality as that used for the shop coat.

-- End of Section --

SECTION 05210

STEEL JOISTS

PART 1 GENERAL

1.1 REFERENCES

The publications listed below form a part of this specification to the extent referenced. The publications are referred to in the text by basic designation only.

STEEL JOIST INSTITUTE (SJI)

SJI-01	(1994) Standard Specifications Load Tables and Weight Tables for Steel Joists and Joist Girders

1.2 SUBMITTALS

The following shall be submitted in accordance with Section 01300 SUBMITTAL PROCEDURES:

Drawings

Steel Joists

Detail drawings shall include fabrication and erection details, specifications for shop painting, and identification markings of joists.

a. Provide templates or location drawings for installation of anchor bolts and metal bearing plates.

b. Provide structural calculations for special and non-standard steel joists for roof trusses. Show design calculations for all the special conditions.

Certificates

Steel Joists.

Certificates stating that the steel joists have been designed and manufactured in accordance with SJI-01. Complete engineering design computations may be submitted in lieu of the certification.

1.3 DESCRIPTION

Steel joists are designated on the drawings in accordance with the standard designations of the Steel Joist Institute. Joists of other standard designations or joists with properties other than those shown may be substituted for the joists designated provided the structural properties are equal to or greater than those of the joists shown and provided all other specified requirements are met.

1.4 DELIVERY AND STORAGE

Materials shall be delivered to the site in undamaged condition and stored off the ground in a well drained location, protected from damage, and easily accessible for inspection and handling.

PART 2 PRODUCTS

2.1 OPEN WEB STEEL JOISTS

Open web steel joists shall conform to SJI-01, K-Series. Joists shall be designed to support the loads given in the standard load tables of SJI-01.

2.2 NOT USED

2.3 NOT USED

2.4 ACCESSORIES AND FITTINGS

Accessories and fittings, including end supports and bridging, shall be in accordance with the standard specifications under which the members were designed.

2.5 SHOP PAINTING

Joists and accessories shall be shop painted with a rust-inhibiting primer paint. For joists which will be finish painted under Section 09900 PAINTING, GENERAL, the primer paint shall be limited to a primer which is compatible with the specified finish paint.

PART 3 EXECUTION

3.1 ERECTION

Installation of joists shall be in accordance with the standard specification under which the member was produced. Joists shall be handled in a manner to avoid damage. Damaged joists shall be removed from the site, except when field repair is approved and such repairs are satisfactorily made in accordance with the manufacturer's recommendations. Joists shall be accurately set, and end anchorage shall be in accordance with the standard specification under which the joists were produced. Joist bridging and anchoring shall be secured in place prior to the application of any construction loads. Any temporary loads shall be distributed so that the carrying capacity of any joist is not exceeded. Loads shall not be applied to bridging during construction or in the completed work. Abraded, corroded, and field welded areas shall be cleaned and touched up with the same type of paint used in the shop painting.

-- End of Section --

SECTION 05300

STEEL DECKING

PART 1 GENERAL

1.1 REFERENCES

The publications listed below form a part of this specification to the extent referenced. The publications are referred to in the text by basic designation only.

AMERICAN IRON AND STEEL INSTITUTE (AISI)

AISI-01	(1986; Addenda 1989) Cold-Formed Steel Design Manual

AMERICAN SOCIETY FOR TESTING AND MATERIALS (ASTM)

ASTM A 611	(1994) Steel, Sheet, Carbon, Cold-Rolled, Structural Quality
ASTM A 653	(1995) Steel Sheet, Zinc-Coated (Galvanized) or Zinc-Iron Alloy coated (Galvannealed) by the Hot-Dip Process
ASTM A 780	(1993a) Repair of Damaged and Uncoated Areas of Hot-Dipped Galvanized Coatings
ASTM A 792	(1995) Steel Sheet, 55% Aluminum-Zinc Alloy-Coated by the Hot-Dip Process, General Requirements

AMERICAN WELDING SOCIETY (AWS)

AWS D1.3	(1989) Structural Welding Code - Sheet Steel

STEEL DECK INSTITUTE (SDI)

SDI-02	(1987; Amended 1991) Diaphragm Design Manual
SDI Pub No 28	(1995) Design Manual for Composite Decks, Form Decks, Roof Decks, and Cellular Metal Floor Deck with Electrical Distribution

STEEL STRUCTURES PAINTING COUNCIL (SSPC)

SSPC Paint 20	(1991) Zinc-Rich Primers (Type I - Inorganic and Type II - Organic)

1.2 SUBMITTALS

The following shall be submitted in accordance with Section 01300 SUBMITTAL PROCEDURES:

Data

Deck Units

Design computations for the structural properties of the deck units or SDI certification that the units are designed in accordance with SDI specifications.

SD-04 Drawings

Deck Units; Accessories;
Attachments; Holes and Openings

Drawings shall include type, configuration, structural properties, location, and necessary details of deck units, accessories, and supporting members; size and location of holes to be cut and reinforcement to be provided; location and sequence of welded or fastener connections; and the manufacturer's erection instructions.

Certificates

Deck Units; Attachments

Manufacturer's certificates attesting that the decking material meets the specified requirements. Manufacturer's certificate attesting that the operators are authorized to use the low-velocity piston tool.

Statements

Attachments

Prior to welding operations, copies of qualified procedures and lists of names and identification symbols of qualified welders and welding operators.

1.3 DELIVERY, STORAGE, AND HANDLING

Deck units shall be delivered to the site in a dry and undamaged condition, stored off the ground with one end elevated, and stored under a weathertight covering permitting good air circulation. Finish of deck units shall be maintained at all times by using touch-up paint whenever necessary to prevent the formation of rust.

PART 2 PRODUCTS

2.1 DECK UNITS

Deck units shall conform to SDI Pub No 28. Panels of maximum possible lengths shall be used to minimize end laps. Fabricate deck units in lengths to span 3 or more supports with flush, telescoped, or nested 50 mm laps at ends, and interlocking, or nested side laps, unless otherwise indicated. Deck with cross-sectional configuration differing from the units indicated may be used, provided that the properties of the proposed units, determined in accordance with AISI-01, are equal to or greater than the properties of the units indicated and that the material will fit the space provided without requiring revisions to adjacent materials or systems.

2.1.1 Roof Deck

Steel deck used in conjunction with insulation and built-up roofing shall conform to ASTM A 653, ASTM A 611 or ASTM A 792. Roof deck units shall be

fabricated of the steel design thickness required by the design drawings and shall be shop painted.

2.2 TOUCH-UP PAINT

Touch-up paint for shop-painted units shall be of the same type used for the shop painting. Welds shall be touched-up with paint conforming to SSPC Paint 20 in accordance with ASTM A 780. Finish of deck units and accessories shall be maintained by using touch-up paint whenever necessary to prevent the formation of rust.

2.3 ADJUSTING PLATES

Adjusting plates or segments of deck units shall be provided in locations too narrow to accommodate full-size units. As far as practical, the plates shall be the same thickness and configuration as the deck units.

2.4 CLOSURE PLATES

2.4.1 Closure Plates for Roof Deck

Voids above interior walls shall be closed with sheet metal where shown. Open deck cells at end walls, eaves, and openings through roofs shall be closed with sheet metal. Sheet metal shall be same thickness as deck units.

2.4.2 NOT USED

2.4.2.1 Cover Plates to Close Panels

Cover plates to close panel edge and end conditions and where panels change direction or abut. Butt joints in composite steel deck may receive a tape joint cover.

2.4.2.2 NOT USED

2.4.2.3 Sheet Metal

Where deck is cut for passage of pipes, ducts, columns, etc., and deck is to remain exposed, provide a neatly cut sheet metal collar to cover edges of deck. Do not cut deck until after installation of supplemental supports.

2.5 ACCESSORIES

The manufacturer's standard accessories shall be furnished as necessary to complete the deck installation. Metal accessories shall be of the same material as the deck and have minimum design thickness as follows: saddles, 1.204 mm other metal accessories, 0.909 mm unless otherwise indicated. Accessories shall include but not be limited to saddles, butt cover plates, underlapping sleeves, and ridge and valley plates.

PART 3 EXECUTION

3.1 ERECTION

Erection of deck and accessories shall be in accordance with SDI-02 and the approved detail drawings. Damaged deck and accessories including material which is permanently stained or contaminated, with burned holes or deformed shall not be installed. The deck units shall be placed on secure supports, properly adjusted, and aligned at right angles to supports before being

permanently secured in place. The deck shall not be used for storage or as a working platform until the units have been secured in position. Loads shall be distributed by appropriate means to prevent damage during construction and to the completed assembly. The maximum uniform distributed storage load shall not exceed the design live load. There shall be no loads suspended directly from the steel deck.

3.2 NOT USED

3.3 ATTACHMENTS

All fasteners shall be installed in accordance with the manufacturer's recommended procedure, except as otherwise specified. The deck units shall be welded with nominal 16 mm diameter puddle welds or fastened with screws, powder-actuated fasteners or pneumatically driven fasteners to supports as indicated on the design drawings and in accordance with requirements of SDI Pub No 28. All welding of steel deck shall be in accordance with AWS D1.3 using methods and electrodes as recommended by the manufacturer of the steel deck being used. Welds shall be made only by operators previously qualified by tests prescribed in AWS D1.3 to perform the type of work required. Welding washers shall not be used at the connections of the deck to supports. Welding washers shall not be used at sidelaps. Holes and similar defects will not be acceptable. Deck ends shall be lapped 50 mm. All partial or segments of deck units shall be attached to structural supports in accordance with Section 2.5 of SDI-02. Powder-actuated fasteners shall be driven with a low-velocity piston tool by an operator authorized by the manufacturer of the piston tool. Pneumatically driven fasteners shall be driven with a low-velocity fastening tool and shall comply with the manufacturer's recommendations.

3.4 HOLES AND OPENINGS

All holes and openings required shall be coordinated with the drawings, specifications, and other trades. Holes and openings shall be drilled or cut, reinforced and framed as indicated on the drawings or described in the specifications and as required for rigidity and load capacity. Holes and openings less than 150 mm across require no reinforcement. Holes and openings 150 to 300 mm across shall be reinforced by 1.204 mm thick steel sheet at least 300 mm wider and longer than the opening and be fastened to the steel deck at each corner of the sheet and at a maximum of 150 mm on center. Holes and openings larger than 300 mm shall be reinforced by steel angles installed perpendicular to the steel joists and supported by the adjacent steel joists. Steel angles shall be installed perpendicular to the deck ribs and shall be fastened to the angles perpendicular to the steel joists. Openings must not interfere with seismic members such as chords and drag struts.

-- End of Section --

SECTION 05500

MISCELLANEOUS METAL

PART 1 GENERAL

1.1 REFERENCES

The publications listed below form a part of this specification to the extent referenced. The publications are referred to in the text by basic designation only.

AMERICAN SOCIETY FOR TESTING AND MATERIALS (ASTM)

ASTM A 123	(1989a) Zinc (Hot-Dip Galvanized) Coatings on Iron and Steel Products
ASTM A 653	(1996) Steel Sheet, Zinc-Coated (Galvanized) or Zinc-Iron Alloy-Coated (Galvannealed) by the Hot-Dip Process
ASTM A 924	(1996a) Steel Sheet, Metallic-Coated by the Hot-Dip Process

AMERICAN WELDING SOCIETY (AWS)

AWS D1.1	(1994) Structural Welding Code - Steel

1.2 SUBMITTALS

Government approval is required for submittals with a "GA" designation; submittals having an "FIO" designation are for information only. The following shall be submitted in accordance with Section 01330 SUBMITTAL PROCEDURES:

SD-04 Drawings

Miscellaneous Metal Items; GA.

Detail drawings indicating material thickness, type, grade, and class; dimensions; and construction details. Drawings shall include catalog cuts, erection details, manufacturer's descriptive data and installation instructions, and templates. Detail drawings for the following items: Downspout Boots; Mirror Frames; Steel Door Frames.

1.3 GENERAL REQUIREMENTS

The Contractor shall verify all measurements and shall take all field measurements necessary before fabrication. Welding to or on structural steel shall be in accordance with AWS D1.1. Items specified to be galvanized, when practicable and not indicated otherwise, shall be hot-dip galvanized after fabrication. Galvanizing shall be in accordance with ASTM A 123, ASTM A 653, or ASTM A 924, as applicable. Exposed fastenings shall be compatible materials, shall generally match in color and finish, and shall harmonize with the material to which fastenings are applied. Materials and parts necessary to complete each item, even though such work

is not definitely shown or specified, shall be included. Poor matching of holes for fasteners shall be cause for rejection. Fastenings shall be concealed where practicable. Thickness of metal and details of assembly and supports shall provide strength and stiffness. Joints exposed to the weather shall be formed to exclude water.

1.4 DISSIMILAR MATERIALS

Where dissimilar metals are in contact, or where aluminum is in contact with concrete, mortar, masonry, wet or pressure-treated wood, or absorptive materials subject to wetting, the surfaces shall be protected with a coat of bituminous paint or asphalt varnish.

1.5 WORKMANSHIP

Miscellaneous metalwork shall be well formed to shape and size, with sharp lines and angles and true curves. Drilling and punching shall produce clean true lines and surfaces. Welding shall be continuous along the entire area of contact except where tack welding is permitted. Exposed connections of work in place shall not be tack welded. Exposed welds shall be ground smooth. Exposed surfaces of work in place shall have a smooth finish, and unless otherwise approved, exposed riveting shall be flush. Where tight fits are required, joints shall be milled. Corner joints shall be coped or mitered, well formed, and in true alignment. Work shall be accurately set to established lines and elevations and securely fastened in place. Installation shall be in accordance with manufacturer's installation instructions and approved drawings, cuts, and details.

1.6 ANCHORAGE

Anchorage shall be provided where necessary for fastening miscellaneous metal items securely in place. Anchorage not otherwise specified or indicated shall include slotted inserts made to engage with the anchors, expansion shields, and power-driven fasteners when approved for concrete; toggle bolts and through bolts for masonry; machine and carriage bolts for steel; and lag bolts and screws for wood.

1.7 NOT USED

1.8 SHOP PAINTING

Surfaces of ferrous metal except galvanized surfaces, shall be cleaned and shop coated with the manufacturer's standard protective coating unless otherwise specified. Surfaces of items to be embedded in concrete shall not be painted. Items to be finish painted shall be prepared according to manufacturer's recommendations or as specified.

PART 2 PRODUCTS

2.1 NOT USED

2.2 NOT USED

2.3 NOT USED

2.4 NOT USED

2.5 NOT USED

2.6 NOT USED

2.7 NOT USED

2.8 DOWNSPOUT BOOTS

Downspout boots shall be cast iron with receiving bells sized to fit downspouts.

2.9 NOT USED

2.10 NOT USED

2.11 NOT USED

2.12 NOT USED

2.13 NOT USED

2.14 NOT USED

2.15 NOT USED

2.16 NOT USED

2.17 NOT USED

2.18 MIRROR FRAMES

Frames for plate glass mirrors larger than 450 by 750 mm shall be fabricated from corrosion-resisting steel with satin finish. Frames shall be provided with concealed fittings and tamperproof mountings.

2.19 MISCELLANEOUS

Miscellaneous plates and shapes for items that do not form a part of the structural steel framework, such as lintels, sill angles, miscellaneous mountings, and frames, shall be provided to complete the work.

2.20 NOT USED

2.21 NOT USED

2.22 NOT USED

2.23 NOT USED

2.24 NOT USED

2.25 NOT USED

2.26 NOT USED

2.27 STEEL DOOR FRAMES

Steel door frames built from structural shapes shall be neatly mitered and securely welded at the corners with all welds ground smooth. Jambs shall be provided with 50 by 6 by 300 mm bent, adjustable metal anchors spaced not over 760 mm on centers. Provision shall be made to stiffen the top

member for all spans over 900 mm. Continuous door stops shall be made of 38 by 16 mm bars.

PART 3 EXECUTION

3.1 GENERAL INSTALLATION REQUIREMENTS

All items shall be installed at the locations shown and according to the manufacturer's recommendations. Items listed below require additional procedures as specified.

3.2 NOT USED

3.3 NOT USED

3.4 DOOR GUARD FRAME

Door guard frame shall be mounted over the glazed opening using 6 mm lag bolts on the interior of wood doors or tamperproof through bolts on the interior of metal doors.

3.5 NOT USED

3.6 INSTALLATION OF DOWNSPOUT BOOTS

Downspouts shall be secured to building through integral lips with appropriate fasteners.

3.7 NOT USED

3.8 NOT USED

3.9 NOT USED

3.10 NOT USED

3.11 NOT USED

3.12 NOT USED

3.13 NOT USED

3.14 DOOR FRAMES

Door frames shall be secured to the floor slab by means of angle clips and expansion bolts. Continuous door stops shall be welded to the frame or tap screwed with countersunk screws at no more than 450 mm centers, assuring in either case full contact with the frame. Any necessary reinforcements shall be made and the frames shall be drilled and tapped as required for hardware.

-- End of Section --

SECTION 06100

ROUGH CARPENTRY

PART 1 GENERAL

1.1 REFERENCES

The publications listed below form a part of this specification to the extent referenced. The publications are referred to in the text by basic designation only.

AMERICAN INSTITUTE OF TIMBER CONSTRUCTION (AITC)

AITC 111	(1979) Recommended Practice for Protection of Structural Glued Laminated Timber During Transit, Storage and Erection

AMERICAN NATIONAL STANDARDS INSTITUTE (ANSI)

ANSI A208.1	(1993) Particleboard

AMERICAN SOCIETY FOR TESTING AND MATERIALS (ASTM)

ASTM A 307	(1994) Carbon Steel Bolts and Studs, 60 000 PSI Tensile Strength
ASTM C 79	(1995) Gypsum Sheathing Board
ASTM C 518	(1991) Steady-State Heat Flux Measurements and Thermal Transmission Properties By Means of the Heat Flow Meter Apparatus
ASTM C 553	(1992) Mineral Fiber Blanket Thermal Insulation for Commercial and Industrial Applications
ASTM C 578	(1995) Rigid, Cellular Polystyrene Thermal Insulation
ASTM C 591	(1994) Unfaced Preformed Rigid Cellular Polyisocyanurate Thermal Insulation
ASTM C 665	(1995) Mineral-Fiber Blanket Thermal Insulation for Light Frame Construction and Manufactured Housing
ASTM C 1136	(1995) Flexible, Low Permeance Vapor Retarders for Thermal Insulation
ASTM C 1289	(1995) Faced Rigid Cellular Polyisocyanurate Thermal Insulation Board

ASTM E 84	(1996a) Surface Burning Characteristics of Building Materials
ASTM F 547	(1977; R 1990) Definitions of Terms Relating to Nails for Use with Wood and Wood-Base Materials

AMERICAN WOOD-PRESERVERS' ASSOCIATION (AWPA)

AWPA C2	(1995) Lumber, Timber, Bridge Ties and Mine Ties - Preservative Treatment by Pressure Processes
AWPA C9	(1995) Plywood - Preservative Treatment by Pressure Processes
AWPA M4	(1995) Standard for the Care of Preservative-Treated Wood Products
AWPA P5	(1996) Standards for Waterborne Preservatives

APA - THE ENGINEERED WOOD ASSOCIATION (APA)

APA EWS R540C	(1996) Builder Tips Proper Storage and Handling of Glulam Beams
APA PRP-108	(1994: Rev 1996) Performance Standards and Policies for Structural-Use Panels (Form No. E445Q)

CALIFORNIA REDWOOD ASSOCIATION (CRA)

CRA-01	(1997) Standard Specifications for Grades of California Redwood Lumber

DEPARTMENT OF COMMERCE (DOC)

DOC PS 1	(1996) Voluntary Product Standard - Construction and Industrial Plywood
DOC PS 2	(1992) Performance Standards for Wood-Based Structural-Use Panels

FACTORY MUTUAL ENGINEERING AND RESEARCH (FM)

FM LPD 1-49	(1995) Loss Prevention Data Sheet - Perimeter Flashing

NATIONAL HARDWOOD LUMBER ASSOCIATION (NHLA)

NHLA-01	(1994) Rules for the Measurement & Inspection of Hardwood & Cypress

NORTHEASTERN LUMBER MANUFACTURERS ASSOCIATION (NELMA)

NELMA-01	(1997) Standard Grading Rules for

Northeastern Lumber

SOUTHERN CYPRESS MANUFACTURERS ASSOCIATION (SCMA)

SCMA-01	(1986; Supple No. 1, Aug 1993) Standard Specifications for Grades of Southern Cypress

SOUTHERN PINE INSPECTION BUREAU (SPIB)

SPIB 1003	(1994; Supple 8 thru 11) Standard Grading Rules for Southern Pine Lumber

WEST COAST LUMBER INSPECTION BUREAU (WCLIB)

WCLIB Std 17	(1996; Supples VII(A-E), VIII(A-C)) Grading Rules for West Coast Lumber

WESTERN WOOD PRODUCTS ASSOCIATION (WWPA)

WWPA-01	(1995; Supple Nos. 1 thru 5) Western Lumber Grading Rules 95

1.2 SUBMITTALS

Government approval is required for submittals with a "GA" designation; submittals having an "FIO" designation are for information only. The following shall be submitted in accordance with Section 01330 SUBMITTAL PROCEDURES:

SD-04 Drawings

Nailers and Nailing Strips; GA.

Drawings of field erection details, including materials and methods of fastening nailers in conformance with Factory Mutual wind uplift rated systems specified in other Sections of these specifications.

SD-13 Certificates

Grading and Marking; FIO.

Manufacturer's certificates (approved by an American Lumber Standards approved agency) attesting that lumber and material not normally grade marked meet the specified requirements. Certificate of Inspection for grade marked material by an American Lumber Standards Committee (ALSC) recognized inspection agency prior to shipment.

Insulation; GA.

Certificate attesting that the cellulose, perlite, glass and mineral fiber, polyurethane, or polyisocyanurate insulation furnished for the project contains recovered material, and showing an estimated percent of such recovered material.

1.3 DELIVERY AND STORAGE

Materials shall be delivered to the site in undamaged condition, stored off ground in fully covered, well ventilated areas, and protected from extreme

changes in temperature and humidity. Laminated timber shall be handled and stored in accordance with AITC 111 or APA EWS R540C.

PART 2 PRODUCTS

2.1 LUMBER AND SHEATHING

2.1.1 Grading and Marking

2.1.1.1 Lumber Products

Solid sawn and finger-jointed lumber shall bear an authorized gradestamp or grademark recognized by ALSC, or an ALSC recognized certification stamp, mark, or hammerbrand. Surfaces that are to be exposed to view shall not bear grademarks, stamps, or any type of identifying mark. Hammer marking will be permitted on timbers when all surfaces will be exposed to view.

2.1.1.2 NOT USED

2.1.1.3 Plywood

Materials shall bear the grademark or other identifying marks indicating grades of material and rules or standards under which produced, including requirements for qualifications and authority of the inspection organization. Except for plywood and structural-use panels, bundle marking will be permitted in lieu of marking each individual piece. Surfaces that are to be exposed to view shall not bear grademarks or other types of identifying marks.

2.1.2 Sizes

Lumber and material sizes shall conform to requirements of the rules or standards under which produced. Unless otherwise specified, lumber shall be surfaced on four sides. Unless otherwise specified, sizes indicated are nominal sizes, and actual sizes shall be within manufacturing tolerances allowed by the standard under which the product is produced.

2.1.3 Treatment

Exposed areas of treated wood that are cut or drilled after treatment shall receive a field treatment in accordance with AWPA M4. Items of all-heart material of cedar, cypress, or redwood will not require preservative treatment, except when in direct contact with soil. Except as specified for all-heart material of the previously mentioned species, the following items shall be treated:

a. Wood members in contact with or within 455 mm (18 inches) of soil.

b. Wood members in contact with water.

c. Wood members exposed to the weather including those used in builtup roofing systems or as nailing strips or nailers over fiberboard or gypsum-board wall sheathing as a base for wood siding.

d. Wood members set into concrete regardless of location, including flush-with-deck wood nailers for roofs.

e. Wood members in contact with concrete that is in contact with soil or water or that is exposed to weather.

2.1.3.1 Lumber and Timbers

Lumber and timbers shall be treated in accordance with AWPA C2 with waterborne preservatives listed in AWPA P5 to a retention level as follows:

a. 4 kg per cubic meter (0.25 pcf) intended for above ground use.

b. 6.4 kg per cubic meter (0.40 pcf) intended for ground contact and fresh water use.

2.1.3.2 Plywood

Plywood shall be treated in accordance with AWPA C9 with waterborne preservatives listed in AWPA P5 to a retention level as follows:

a. 4 kg per cubic meter (0.25 pcf) intended for above ground use.

b. 6.4 kg per cubic meter (0.40 pcf) intended for ground contact and fresh water use.

2.1.4 Moisture Content

At the time lumber and other materials are delivered and when installed in the work their moisture content shall be as follows:

a. Treated and Untreated Lumber Except Roof Planking: 100 mm (4 inches) or less, nominal thickness, 19 percent maximum. 125 mm (5 inches) or more, nominal thickness, 23 percent maximum in a 75 mm (3 inch) perimeter of the timber cross-section.

b. Roof Planking: 15 percent maximum.

c. Materials Other Than Lumber: In accordance with standard under which product is produced.

2.1.5 NOT USED

2.1.6 NOT USED

2.1.7 Sheathing

Sheathing shall be fiberboard, gypsum board, plywood, structural-use panels, or wood for wall sheathing; and plywood, structural-use panels, or wood for roof sheathing.

2.1.7.1 NOT USED

2.1.7.2 Gypsum Board

Gypsum board shall conform to ASTM C 79, 13 mm thick (1/2 inch thick), 1200 mm (4 feet) wide with straight edges for supports 400 mm (16 inches) on center without corner bracing of framing or for supports 600 mm (24 inches) on center with corner bracing of framing; 600 mm wide (2 feet) wide with V-tongue and groove edges for supports 400 or 600 mm (16 or 24 inches) on center with corner bracing of framing.

2.1.7.3 Plywood

Plywood shall conform to DOC PS 1, APA PRP-108 or DOC PS 2, Grade C-D with exterior glue. Sheathing for roof and walls without corner bracing of framing shall have a span rating of 16/0 or greater for supports 400 mm on center and a span rating of 24/0 or greater for supports 600 mm on center.

2.1.7.4 NOT USED

2.1.7.5 Wood

Species and grade shall be in accordance with TABLE I at the end of this section. Wall sheathing shall be 25 mm (1 inch) thick for supports 400 or 600 mm (16 or 24 inches) on center without corner bracing of framing provided sheathing is applied diagonally. Roof sheathing shall be 25 mm (1 inch) thick for supports 400 or 600 mm (16 or 24 inches) on center.

2.1.8 NOT USED

2.1.9 NOT USED

2.1.9.1 Hardboard

AHA ANSI/AHA A135.4 service class, sanded one side, 6 mm (1/4 inch) thick, 1200 mm (4 feet) wide.

2.1.9.2 Particleboard

ANSI A208.1, Grade 1-M-1, 6 mm (1/4 inch) thick, 1200 x 1200 mm (4 x 4 feet).

2.1.9.3 Plywood

DOC PS 1, underlayment grade with exterior glue, or C-C (Plugged) exterior grade 9 mm (11/32 inch) thick, 1200 mm (4 feet) wide.

2.1.10 NOT USED

2.1.11 NOT USED

2.1.12 Miscellaneous Wood Members

2.1.12.1 Nonstress Graded Members

Members shall include bridging, corner bracing, furring, grounds, and nailing strips. Members shall be in accordance with TABLE I for the species used. Sizes shall be as follows unless otherwise shown:

Member	Size mm (inch)
Bridging	25 x 75 (1 x 3) or 25 x 100 (1 x 4) for use between members 50 x 300 (2 x 12) and smaller; 50 x 100 (2 x 4) for use between members larger than 50 x 300 (2 x 12).
Corner bracing	25 x 100 (1 x 4).
Furring	25 (1) x 50 (2)

Member	Size mm (inch)
Grounds	Plaster thickness by 38.
Nailing strips	25 x 75 (1 x 3) or 25 x 100 (1 x 4) when used as shingle base or interior finish, otherwise 50 mm (2 inch) stock.

2.1.12.2 Wood Bumpers

Bumpers shall be of the species and grade in accordance with TABLE II at the end of this section, size as shown.

2.1.12.3 Sill Plates

Sill plates shall be standard or number 2 grade.

2.1.12.4 Blocking

Blocking shall be standard or number 2 grade.

2.1.12.5 Rough Bucks and Frames

Rough bucks and frames shall be straight standard or number 2 grade.

2.2 ACCESSORIES AND NAILS

Markings shall identify both the strength grade and the manufacturer. Accessories and nails shall conform to the following:

2.2.1 Anchor Bolts

ASTM A 307, size as indicated, complete with nuts and washers.

2.2.2 Bolts: Lag, Toggle, and Miscellaneous Bolts and Screws

Type, size, and finish best suited for intended use. Finish options include zinc compounds, cadmium, and aluminum paint impregnated finishes.

2.2.3 Clip Angles

Steel, 5 mm (3/16 inch) thick, size best suited for intended use; or zinc-coated steel or iron commercial clips designed for connecting wood members.

2.2.4 Expansion Shields

Type and size best suited for intended use.

2.2.5 NOT USED

2.2.6 NOT USED

2.2.7 Nails and Staples

ASTM F 547, size and type best suited for purpose; staples shall be as recommended by the manufacturer of the materials to be joined. For sheathing and subflooring, length of nails shall be sufficient to extend 25

mm (1 inch) into supports. In general, 8-penny or larger nails shall be used for nailing through 25 mm (1 inch) thick lumber and for toe nailing 50 mm (2 inch) thick lumber; 16-penny or larger nails shall be used for nailing through 50 mm (2 inch) thick lumber. Nails used with treated lumber and sheathing shall be galvanized. Nailing shall be in accordance with the recommended nailing schedule contained in AF&PA T11-WCD1. Where detailed nailing requirements are not specified, nail size and spacing shall be sufficient to develop an adequate strength for the connection. The connection's strength shall be verified against the nail capacity tables in AF&PA T901. Reasonable judgement backed by experience shall ensure that the designed connection will not cause the wood to split. If a load situation exceeds a reasonable limit for nails, a specialized connector shall be used.

2.3 INSULATION

Thermal resistance of insulation shall be not less than the R-values shown. R-values shall be determined at 24 degrees C (75 degrees F) in accordance with ASTM C 518. Insulation shall contain the highest practicable percentage of recovered material which has been recovered or diverted from solid waste, but not including material reused in a manufacturing process. Where two materials have the same price and performance, the one containing the higher recovered material content shall be provided. Insulation shall be the standard product of a manufacturer and factory marked or identified with manufacturer's name or trademark and R-value. Identification shall be on individual pieces or individual packages. Materials containing more than one percent asbestos will not be allowed.

2.3.1 Batt or Blanket

2.3.1.1 Glass Fiber Batts and Rolls

Glass fiber batts and rolls shall conform to ASTM C 665, Type I unfaced insulation, Class A, having a UL rating of 25 and a smoke developed rating of 150 or less when tested in accordance with ASTM E 84. Insulation shall have a 0.25 mm (10 mil) thick, white, puncture resistant woven-glass cloth with vinyl facing on one side. Width and length shall suit construction conditions.

2.3.1.2 Mineral Fiber Batt

Mineral fiber batt shall conform to ASTM C 665, Type I unfaced insulation.

2.3.1.3 Mineral Fiber Blanket

Mineral fiber blanket shall conform to ASTM C 553, Type I, Class 6. Blankets shall be sized to suit construction conditions, resilient type for use below and above ambient temperature to 195 degrees C (350 degrees F). Blankets shall have a factory applied vapor-barrrier facing on one side with 50 mm (2 inch) nailing tabs on both edges. Vapor barriers shall be fire retardant, high vapor transmission, and aluminum foil laminated to crepe paper type conforming to ASTM C 1136, Type II. Nominal density shall be 12 kg per cubic meter (0.75 pcf).

2.3.2 NOT USED

2.3.3 NOT USED

2.3.4 Rigid Insulation

2.3.4.1 Polystyrene Board

Polystyrene board shall be extruded and conform to ASTM C 578, Type IV.

2.3.4.2 Polyurethane or Polyisocyanurate Board

Polyurethane or polyisocyanurate board shall have a minimum recovered material content of 9 percent by weight of core material in the polyurethane or polyisocyanurate portion. Unfaced preformed polyurethane shall conform to ASTM C 591. Faced polyisocyanurate shall conform to ASTM C 1289.

PART 3 EXECUTION

3.1 NOT USED

3.2 NOT USED

3.3 NOT USED

3.4 NOT USED

3.5 NOT USED

3.6 INSTALLATION OF MISCELLANEOUS WOOD MEMBERS

3.6.1 NOT USED

3.6.2 NOT USED

3.6.3 Blocking

Blocking shall be provided as necessary for application of siding, sheathing, subflooring, wallboard, and other materials or building items, and to provide firestopping. Blocking for firestopping shall ensure a maximum dimension of 2400 mm for any concealed space. Blocking shall be cut to fit between framing members and rigidly nailed thereto.

3.6.4 Nailers and Nailing Strips

Nailers and nailing strips shall be provided as necessary for the attachment of finish materials. Nailers used in conjunction with roof deck installation shall be installed flush with the roof deck system. Stacked nailers shall be assembled with spikes or nails spaced not more than 450 mm on center and staggered. Beginning and ending nails shall not be more than 150 mm for nailer end. Ends of stacked nailers shall be offset approximately 300 mm in long runs and alternated at corners. Anchors shall extend through the entire thickness of the nailer. Strips shall be run in lengths as long as practicable, butt jointed, cut into wood framing members when necessary, and rigidly secured in place. Nailers and nailer installation for Factory Mutual wind uplift rated roof systems specified in other Sections of these specifications shall conform to the recommendations contained in FM LPD 1-49.

3.6.5 Wood Grounds

Wood grounds shall be provided as necessary for attachment of trim, finish, and other work to plaster. Grounds shall be run in lengths as long as

practicable, butt jointed, and rigidly secured in place.

3.6.6 Furring Strips

Furring strips shall be provided at the locations shown. Furring strips shall be installed at 400 mm (16 inches) on center unless otherwise shown, run in lengths as long as practicable, butt jointed and rigidly secured in place.

3.7 NOT USED

3.8 INSTALLATION OF INSULATION

Insulation shall be installed after construction has advanced to a point that the installed insulation will not be damaged by remaining work. For thermal insulation the actual installed thickness shall provide the thermal resistance (R-values) shown. For acoustical insulation the installed thickness shall be as shown. Insulation shall be installed on the weather side of such items as electrical boxes and water lines. Unless otherwise specified, installation shall be in accordance with the manufacturer's recommendation.

3.9 NOT USED

3.10 NOT USED

TABLE I. SPECIES AND GRADE

Subflooring, Roof Sheathing, Wall Sheathing, Furring

Grading Rules	Species	Const Standard	No. 2 Comm	No. 2 Board Comm	No. 3 Comm
NHLA-01					
	Cypress			X	
NELMA-01					
	Northern White Cedar				X
	Eastern White Pine	X			
	Northern Pine	X			
	Balsam Fir				X
	Eastern Hemlock-Tamarack				X
CRA-01					
	Redwood		X		
SCMA-01					
	Cypress			X	
SPIB 1003					
	Southern Pine		X		
WCLIB Std 17					
	Douglas Fir-Larch	X			
	Hem-Fir	X			
	Sitka Spruce	X			

TABLE I. SPECIES AND GRADE

Subflooring, Roof Sheathing, Wall Sheathing, Furring

Grading Rules	Species	Const Standard	No. 2 Comm	No. 2 Board Comm	No. 3 Comm
	Mountain Hemlock	X			
	Western Cedar	X			
WWPA-01					
	Douglas Fir-Larch	X			
	Hem-Fir	X			
	Idaho White Pine	X			
	Lodgepole Pine			X	
	Ponderosa Pine			X	
	Sugar Pine			X	
	Englemann Spruce			X	
	Douglas Fir South			X	
	Mountain Hemlock			X	
	Subalpine Fir			X	
	Western Cedar			X	

TABLE II. SPECIES AND GRADE

Wood Bumpers

Grading Rules	Species	No. 1	No. 2
NHLA-01			
	Red Oak	X	
NELMA-01			
	Northern Pine		X
	Eastern Hemlock-Tamarack		X
SPIB 1003			
	Southern Pine	X	
WCLIB Std 17			
	Douglas Fir-Larch		X
	Hem-Fir		X
WWPA-01			
	Douglas Fir-Larch		X
	Hem-Fir		X
	Douglas Fir-South		X

-- End of Section --

SECTION 07220

ROOF INSULATION

PART 1 GENERAL

1.1 REFERENCES

The publications listed below form a part of this specification to the extent referenced. The publications are referred to in the text by basic designation only.

AMERICAN NATIONAL STANDARDS INSTITUTE (ANSI)

ANSI A208.1	(1993) Particleboard

AMERICAN SOCIETY FOR TESTING AND MATERIALS (ASTM)

ASTM C 726	(1993) Mineral Fiber Roof Insulation Board
ASTM C 728	(1997) Perlite Thermal Insulation Board
ASTM C 1050	(1991) Rigid Cellular Polystyrene-Cellulosic Fiber Composite Roof Insulation
ASTM C 1289	(1995) Faced Rigid Cellular Polyisocyanurate Thermal Insulation Board
ASTM D 41	(1994) Asphalt Primer Used in Roofing, Dampproofing, and Waterproofing
ASTM D 312	(1995a) Asphalt Used in Roofing
ASTM D 4586	(1993) Asphalt Roof Cement, Asbestos Free
ASTM F 547	(1977; R 1990) Definitions of Terms Relating to Nails for Use with Wood and Wood-Base Materials

FACTORY MUTUAL ENGINEERING AND RESEARCH (FM)

FM P9513	(1996) Loss Prevention Data for Roofing Contractors
FM P7825a	(1998) Approval Guide Fire Protection
FM P7825c	(1998) Approval Guide Building Materials

UNDERWRITERS LABORATORIES (UL)

UL Bld Mat Dir	(1998) Building Materials Directory

1.2 SUBMITTALS

Government approval is required for submittals with a "GA" designation; submittals having an "FIO" designation are for information only. The following shall be submitted in accordance with Section 01330 SUBMITTAL PROCEDURES:

SD-06 Instructions

Application of Insulation; FIO.

Insulation manufacturer's recommendations for the application and installation of insulation.

SD-08 Statements

Inspection; FIO.

The inspection procedure for insulation installation, prior to start of roof insulation work.

SD-13 Certificates

Insulation; GA.

Certificate attesting that the expanded perlite or polyisocyanurate insulation contains recovered material and showing estimated percent of recovered material. Certificates of compliance for felt materials.

1.3 STORAGE OF MATERIALS

Extruded polystyrene shall be stored in accordance with manufacturer's instructions. Other insulation, base sheet, and felt shall be kept dry at all times, before, during, and after delivery to the site and shall be stored in an enclosed building or in a closed trailer. Wet insulation, wet base sheet or wet felt shall be permanently removed from the site. Felts shall be stacked on end one level high. Felt rolls shall be maintained at a temperature above 10 degrees C (50 degrees F) for 24 hours immediately before laying.

1.4 FIRE CLASSIFICATION

Insulation shall have been tested as part of a roof construction assembly of the type used in this project and the construction shall be listed as Fire-Classified in UL Bld Mat Dir or Class I in FM P7825a.

PART 2 PRODUCTS

2.1 BITUMINOUS MATERIALS

Bituminous materials shall conform to the following requirements:

2.1.1 Asphalt Bitumen

ASTM D 312, Type III or IV. Asphalt flash point, finished blowing temperature, and equiviscous temperature (EVT) shall be indicated on bills of lading or on individual containers.

2.1.2 Asphalt Cement

ASTM D 4586, Type I for horizontal surfaces; Type II for vertical surfaces.

2.1.3 Asphalt Primer

ASTM D 41.

2.2 INSULATION

Insulation shall be a standard product of the manufacturer and shall be factory marked with the manufacturer's name or trade mark, the material specification number, the R-value at 24 degrees C (75 degrees F), and the thickness. Minimum thickness shall be as recommended by the manufacturer. Boards shall be marked individually. The thermal resistance of insulation shall be not less than the R-value shown on the drawings. The insulation manufacturing process shall not include chlorofluoro carbons (CFC) or formaldehydes. Insulation and fiberboard shall contain the highest practicable percentage of material which has been recovered or diverted from solid waste (e.g., postconsumer waste), but not including material reused in a manufacturing process. Where two materials have comparable price and performance, the one having the higher recovered material content shall be selected. Insulation shall be one, or a combination of the following materials:

2.2.1 NOT USED

2.2.2 Composite Board Insulation

ASTM C 726, or ASTM C 1050 or ASTM C 1289 Type III, or ASTM C 1289 Type VI. Perlite, in composite board, may be replaced with ANSI A208.1 wood particle board, 11 mm (7/16 inch) minimum thickness, provided that the composite board meets specified physical requirements. Composite board with wood particle board shall conform to ASTM C 1289, Type V.

2.2.3 Expanded-Perlite Insulation Board

ASTM C 728 with a minimum recovered material content of 23 percent of the expanded perlite portion of the board.

2.2.4 NOT USED

2.2.5 NOT USED

2.2.6 Polyisocyanurate

ASTM C 1289, Type I, or ASTM C 1289 Type II, having minimum recovered material content of 9 percent by weight of the polyisocyanurate portion of the board.

2.3 NAILS AND FASTENERS

Nails and fasteners shall conform to the following requirements:

2.3.1 Nails for Fastening Insulation to Flush Mounted Wood Nailers

ASTM F 547 of sufficient length to hold insulation securely in place.

2.3.2 Fasteners

Insulation manufacturer's recommendations except holding power, when driven, shall be not less than 178 N (40 pounds) each in steel deck. Fasteners for steel or concrete decks shall conform to FM P7825c for Class I roof deck construction, and shall be spaced to withstand an uplift pressure of 2.87 kPa (60 pounds per square foot.

2.3.3 Metal Disks

Flat and not less than 0.39 mm (30 gauge) thickness. Disks used with nails or fasteners for securing fiberboard insulation shall be minimum 25 mm (l inch) diameter. Disks used with nails or fasteners for securing other board insulation shall be minimum 53 mm (2-1/8 inches) in diameter.

2.4 NOT USED

2.5 NOT USED

2.6 NOT USED

2.7 WOOD NAILERS

Wood nailers shall conform to Section 06100 ROUGH CARPENTRY, including preservative treatment. Edge nailers shall be not less than nominal 150 mm (6 inches) wide and of thickness to finish flush with the top surface of the insulation. Surface mounted nailers shall be a nominal 75 mm (3 inches) wide by the full thickness of the insulation.

PART 3 EXECUTION

3.1 COORDINATION REQUIREMENTS

Insulation and roofing membrane shall be finished in one operation up to the line of termination at the end of each day's work. Completed sections shall be waterproofed when more than one day is required to finish the roofing. Phased construction will not be permitted.

3.2 ENVIRONMENTAL CONDITIONS

Air temperature shall be above 4 Degrees C (40 degrees F) and there shall be no visible ice, frost, or moisture on the roof deck when the insulation and roofing are installed.

3.3 SUBSTRATE PREPARATION

The substrate construction of any bay or section of the building shall be completed before insulation work is begun thereon. Vents and other items penetrating the roof shall be secured in position and properly prepared for flashing. Prior to application of insulation, substrate joints shall be covered with a 100 mm (4 inch) strip of roofing felt, embedded in and coated with asphalt cement. Substrate surface shall be smooth, clean, and dry at time of application.

3.4 NOT USED

3.5 NOT USED

3.6 INSTALLATION OF WOOD NAILERS

Nailers shall be secured to steel decks as indicated. Bolt anchors shall

have nuts and washers countersunk, and bolts shall be cut flush with top of nailer. Powder-actuated fasteners, sized and spaced for nailer anchorage equivalent to that specified and indicated, may be used when approved. Surface mounted nailers shall be installed parallel with the roof slope and shall be spaced not over 1.2 meters (4 feet) face-to-face, except that where the insulation units are less than 1.2 meters (4 feet) in length the nailers shall be spaced to minimize cutting of the insulation.

3.7 APPLICATION OF INSULATION

Insulation shall be laid in two or more layers. Units of insulation shall be laid in courses parallel with the roof slope. End joints shall be staggered. Insulation shall be cut to fit neatly against adjoining surfaces. Joints between insulation boards shall not exceed 6 mm (1/4 inch). Joints in successive layers shall be staggered with respect to joints of preceding layer. Where insulation is applied over steel deck, long edge joints shall continuously bear on surfaces of the steel deck. Insulation which can be readily lifted after installation is not considered to be adequately secured. Insulation shall be applied so that all roof insulation applied each day is waterproofed the same day. Phased construction will not be permitted. Application of impermeable faced insulation shall be performed without damage to the facing.

3.7.1 Mechanical Fastening

On steel decks, or any slope exceeding 42 mm/m (1/2 inch per foot), the first layer of insulation shall be mechanically fastened. Method of attachment shall be in accordance with recommendations of the insulation manufacturer and requirements specified.

3.7.2 Steel Decks

Uninsulated steel decks shall have insulation applied to span the steel deck flutes and to act as an underlayment for the roof membrane. First layer of insulation on steel deck shall be compatible with mechanical fastening.

3.7.3 Foam Insulation

Polyisocyanurate, or polystyrene foam insulations shall be isolated from built-up roof and modified bitumen membrane by a separate or composite layer of cellular glass, mineral fiber board, perlite board, or fiberboard. Polystyrene shall not be exposed to solvent-base adhesive, coal-tar bitumen or to asphalt which is hotter than 93 degrees C (200 degrees F).

3.7.4 Installation

Except for the first layer on steel deck, insulation layers shall be laid in solid moppings of hot asphalt applied at a rate of at least 0.97 kg per meter (20 lbs per square). Asphalt shall not be applied further than one panel length ahead of roof insulation being installed. Where roof slopes are greater than 42 mm/m, (1/2 inch per foot), roof insulation shall be held in place by both asphalt mopping and mechanical fasteners. Asphalt primer shall be applied at the rate of 0.4 L/square meter (1 gallon per square) over the entire surface to be mopped when the insulation is applied over concrete deck. The edges of insulation boards adjoining vented nailers shall be kept free of asphalt.

3.7.5 Protection Requirements

The insulation shall be kept dry at all times. Insulation boards shall not be kicked into position. Exposed edges of the insulation shall be protected by cutoffs at the end of each work day or whenever precipitation is imminent. Cutoffs shall be 2 layers of bituminous-saturated felt set in plastic bituminous cement. Cutoffs shall be removed when work is resumed. Edges of insulation at open spaces between insulation and parapets or other walls and spaces at curbs, scuttles, and expansion joints, shall be protected until permanent roofing and flashing is applied. Storing, walking, wheeling, or trucking directly on insulation or on roofed surfaces will not be permitted. Smooth, clean board or plank walkways, runways, and platforms shall be used, as necessary to distribute weight to conform to indicated live load limits of roof construction.

3.8 INSPECTION

The Contractor shall establish and maintain an inspection procedure to assure compliance of the installed roof insulation with the contract requirements. Any work found not to be in compliance with the contract shall be promptly removed and replaced or corrected in an approved manner. Quality control shall include, but not be limited to, the following:

a. Observation of environmental conditions; number and skill level of insulation workers; start and end time of work.

b. Verification of certification, listing or label compliance with FM P9513.

c. Verification of proper storage and handling of insulation and vapor retarder materials before, during, and after installation.

d. Inspection of vapor retarder application, including edge envelopes and mechanical fastening.

e. Inspection of mechanical fasteners; type, number, length, and spacing.

f. Coordination with other materials, cants, sleepers, and nailing strips.

g. Inspection of insulation joint orientation and laps between layers, joint width and bearing of edges of insulation on deck.

h. Installation of cutoffs and proper joining of work on subsequent days.

i. Continuation of complete roofing system installation to cover insulation installed same day.

-- End of Section --

SECTION 07412

NON-STRUCTURAL METAL ROOFING

PART 1 GENERAL

1.1 REFERENCES

The publications listed below form a part of this specification to the extent referenced. The publications are referred to in the text by basic designation only.

AMERICAN SOCIETY FOR TESTING AND MATERIALS (ASTM)

ASTM A 463	(1996a) Steel Sheet, Aluminum-Coated, by the Hot-Dip Process
ASTM A 653	(1996) Steel Sheet, Zinc-Coated (Galvanized) or Zinc-Iron Alloy-Coated (Galvannealed) by the Hot-Dip Process
ASTM A 792	(1995) Steel Sheet, 55% Aluminum-Zinc Alloy-Coated by the Hot-Dip Process
ASTM B 117	(1994) Operating Salt Spray (Fog) Testing Apparatus
ASTM C 518	(1991) Steady-State Heat Flux Measurements and Thermal Transmission Properties by Means of the Heat Flow Meter Apparatus
ASTM C 991	(1992) Flexible Glass Fiber Insulation for Pre-Engineered Metal Buildings
ASTM C 1289	(1995) Faced Rigid Cellular Polyisocyanurate Thermal Insulation Board
ASTM D 522	(1993a) Mandrel Bend Test of Attached Organic Coatings
ASTM D 523	(1989; R 1994) Specular Gloss
ASTM D 714	(1987; R 1994) Evaluating Degree of Blistering of Paints
ASTM D 968	(1993) Abrasion Resistance of Organic Coatings by Falling Abrasive
ASTM D 1308	(1987; R 1993) Effect of Household Chemicals on Clear and Pigmented Organic Finishes
ASTM D 1654	(1992) Evaluation of Painted or Coated Specimens Subjected to Corrosive Environments

ASTM D 2244	(1993) Calculation of Color Differences from Instrumentally Measured Color Coordinates
ASTM D 2247	(1994) Testing Water Resistance of Coatings in 100% Relative Humidity
ASTM D 2794	(1993) Resistance of Organic Coatings to the Effects of Rapid Deformation (Impact)
ASTM D 3359	(1995) Measuring Adhesion by Tape Test
ASTM D 4214	(1989) Evaluating the Degree of Chalking of Exterior Paint Films
ASTM D 4397	(1996) Polyethylene Sheeting for Construction, Industrial, and Agricultural Applications
ASTM D 4587	(1991) Conducting Tests on Paint and Related Coatings and Materials Using a Fluorescent UV-Condensation Light- and Water- Exposure Apparatus
ASTM E 84	(1996a) Surface Burning Characteristics of Building Materials
ASTM E 96	(1995) Water Vapor Transmission of Materials

1.2 DESIGN LOADS

Wind uplift pressures are shown on the contract drawings.

1.3 PERFORMANCE REQUIREMENTS

The metal roofing system supplied shall be suitable for the roof slope, the underlayment, and uplift pressures shown on the contract drawings.

1.4 GENERAL REQUIREMENTS

The Contractor shall furnish a manufacturer's standard product which satisfies the specified design and additional requirements contained herein.

1.4.1 Manufacturer

The non-structural metal roofing system shall be the product of a manufacturer who has been in the practice of manufacturing metal roofs for a period of not less than 3 years and has been involved in at least five projects similar in size and complexity to this project.

1.4.2 Installer

The installer shall be certified by the metal roof manufacturer to have experience in installing at least three projects that are of comparable size, scope and complexity as this project for the particular roof system furnished. The installer may be either employed by the manufacturer or be an independent installer.

1.5 SUBMITTALS

Government approval is required for submittals with a "GA" designation; submittals having an "FIO" designation are for information only. The following shall be submitted in accordance with Section 01330 SUBMITTAL PROCEDURES:

SD-04 Drawings

Metal Roofing; GA.

Drawings consisting of catalog cuts, erection drawings, shop coating and finishing specifications, and other data as necessary to clearly describe materials, sizes, layouts, construction details, fasteners, and erection.

SD-13 Certificates

Roof Panels; GA. Installation; GA. Accessories; GA.

Certificates attesting that the panels and accessories conform to the specified requirements. Certificate for the roof assembly shall certify that the assembly complies with the material and fabrication requirements specified and is suitable for the installation at the indicated design slope. Certified laboratory test reports showing that the sheets to be furnished are produced under a continuing quality control program and that at least five (5) representative samples of similar material to that which will be provided on this project have been previously tested and have met the quality standards specified for factory color finish.

Insulation; GA.

Certificate attesting that the polyurethane or polyisocyanurate insulation furnished for the project contains recovered material, and showing an estimated percent of such recovered material.

Installer; FIO.

Certification of installer.

Warranties; FIO.

At the completion of the project, signed copies of the 5-year Warranty for Non-Structural Metal Roofing System, a sample copy of which is attached to this section, and the 20-year Manufacturer's Material Warranties.

SD-14 Samples

Accessories; GA.

One sample of each type of flashing, trim, fascia, closure, cap and similar items. Size shall be sufficient to show construction and configuration.

Roof Panels; GA.

One piece of each type and finish to be used, 225 mm long, full width.

Fasteners; GA.

Two samples of each type to be used with statement regarding intended use. If so requested, random samples of screws, bolts, nuts, and washers as

delivered to the jobsite shall be taken in the presence of the Contracting Officer and provided to the Contracting Officer for testing to establish compliance with specified requirements.

Gaskets and Insulating Compounds; GA.

Two samples of each type to be used and descriptive data.

Sealant; GA.

One sample, approximately 0.5 kg, (1 pound), and descriptive data.

1.6 DELIVERY AND STORAGE

Materials shall be delivered to the site in a dry and undamaged condition and stored out of contact with the ground. Materials shall be covered with weather tight coverings and kept dry. Material shall not be covered with plastic where such covering will allow sweating and condensation. Plastic may be used as tenting with air circulation allowed. Storage conditions shall provide good air circulation and protection from surface staining.

1.7 WARRANTIES

The Non-Structural Metal Roofing System shall be warranted as outlined below against water leaks, and deficient materials arising out of or caused by ordinary wear and tear by the elements at the site.

1.7.1 Contractor's Weathertightness Warranty

The Non-Structural Metal Roofing System shall be warranted by the Contractor for a period of 5 years against water leakage. The Non-Structural Metal Roofing System covered under this warranty shall include the entire roofing system including, but not limited to, the following: panel seams and joint, all accessories, components and trim; penetrations such as vents, curbs, and skylights; interior or exterior gutters and downspouts; eaves, ridge, hip, valley, rake, gable, wall, or other roof system flashings installed to provide a weathertight roof system; and items specified in other sections of these specifications that become part of the non-structural metal roofing system. All leaks shall be repaired as approved by the Contracting Officer. This warranty shall warrant and cover the entire cost of repair or replacement, including all material, labor, and related markups. The Contractor may supplement this warranty with written warranties from the installer and/or manufacturer, which shall be submitted along with Contractor's warranty; however, the Contractor is ultimately responsible for this warranty. The Contractor's written warranty shall be as outlined in attached example WARRANTY FOR NON-STRUCTURAL METAL ROOFING SYSTEM, and shall start upon final acceptance of the facility or the date the Government takes possession, whichever is earlier. It is understood that the Contractor's Performance Bond shall remain effective throughout the 5 year Contractor's warranty period for the entire metal roof system as outlined above.

1.7.2 Manufacturer's Material Warranties

The Contractor shall furnish, in writing, the following manufacturer's material warranties which cover all Non-Structural Metal Roofing System components such as roof panels, flashing, accessories, and trim, fabricated from coil material:

a. A manufacturer's 20 year material warranty warranting that the aluminum, zinc-coated steel, aluminum-zinc alloy coated steel or aluminum-coated steel as specified herein will not rupture, fail structurally, or perforate under normal atmospheric conditions at the site. Liability under this warranty shall be limited exclusively to the cost of either repairing or replacing nonconforming, ruptured, perforated, or structurally failed coil material.

b. A manufacturer's 20 year exterior material finish warranty warranting that the factory color finish, under normal atmospheric conditions at the site, will not crack, peel, or delaminate; chalk in excess of a numerical rating of 8 when measured in accordance with ASTM D 4214; or fade or change colors in excess of 5 NBS units as measured in accordance with ASTM D 2244. Liability under this warranty is exclusively limited to refinishing or replacing the defective coated coil material.

PART 2 PRODUCTS

2.1 ROOF PANELS

Panels shall be steel and shall have a factory color finish. Length of sheets shall be sufficient to cover the entire length of any unbroken roof slope for slope lengths that do not exceed 9 m (30 feet). Sheets longer than 9 m (30 feet) may be furnished if approved by the Contracting Officer. Width of sheets shall provide nominal 300 mm (12 inches) of coverage in place. Design provisions shall be made for thermal expansion and contraction consistent with the type of system to be used. All sheets shall be either square-cut or miter-cut. The ridge cap shall not have exposed fasteners. Height of corrugations, ribs, or seams, at overlap of adjacent roof sheets shall be the building manufacturer's standard for the indicated roof slope.

2.1.1 Steel Panels

Zinc-coated steel conforming to ASTM A 653; aluminum-zinc alloy coated steel conforming to ASTM A 792, AZ [55] [50] coating; or aluminum-coated steel conforming to ASTM A 463, Type 2, coating designation T2 65. Uncoated roof panels shall be 0.6 mm thick minimum. Panels shall be within 95 percent of the nominal thickness.

2.2 ACCESSORIES

Accessories shall be compatible with the roofing furnished. Flashing, trim, metal closure strips, caps, snow guards, and similar metal accessories shall be not less than the minimum thicknesses specified for roof panels. Exposed metal accessories shall be finished to match the panels furnished. Molded closure strips shall be bituminous-saturated fiber, closed-cell or solid-cell synthetic rubber or neoprene, or polyvinyl chloride premolded to match configuration of the panels and shall not absorb or retain water.

2.2.1 SNOW GUARDS

Snow guards to be a low profile, traditional style and engineered for permanent installation by means of soldering or adhesive sealant to metal roof surface. Color to match roof. Refer to plans for location.

2.3 FASTENERS

Fasteners for roof panels shall be zinc-coated steel, aluminum, or nylon capped steel, type and size as recommended by the manufacturer to meet the performance requirements. Fasteners for accessories shall be the manufacturer's standard. Exposed roof fasteners shall be gasketed or have gasketed washers on the exterior side of the roofing to waterproof the fastener penetration. Washer material shall be compatible with the panels; and gasketed portion of fasteners or washers shall be neoprene or other equally durable elastomeric material approximately 3 mm (1/8 inch) thick.

2.4 FACTORY COLOR FINISH

Panels shall have a factory applied polyvinylidene fluoride finish on the exposed side. The exterior finish shall consist of a baked-on topcoat with an appropriate prime coat. Color shall match the color indicated on the drawings. The exterior coating shall be a nominal 0.050 mm (2 mil) thickness consisting of a topcoat of not less than 0.018 mm (0.7 mil) dry film thickness and the paint manufacturer's recommended primer of not less than 0.025 mm (1.0 mil) thickness. The exterior color finish shall meet the test requirements specified below.

2.4.1 Salt Spray Test

A sample of the sheets shall withstand a salt spray test for a minimum of 1000 hours in accordance with ASTM B 117, including the scribe requirement in the test. Immediately upon removal of the panel from the test, the coating shall receive a rating of 10, no blistering, as determined by ASTM D 714; and a rating of 8, 1 mm (1/32 inch) failure at scribe, as determined by ASTM D 1654.

2.4.2 Formability Test

When subjected to testing in accordance with ASTM D 522 Method B, 3 mm (1/8 inch) diameter mandrel, the coating film shall show no evidence of fracturing to the naked eye.

2.4.3 Accelerated Weathering, Chalking Resistance and Color Change

A sample of the sheets shall be tested in accordance with ASTM D 4587, test condition B for 1000 total hours. The coating shall withstand the weathering test without cracking, peeling, blistering, loss of adhesion of the protective coating, or corrosion of the base metal. Protective coating that can be readily removed from the base metal with tape in accordance with ASTM D 3359, Test Method B, shall be considered as an area indicating loss of adhesion. Following the accelerated weathering test, the coating shall have a chalk rating not less than No. 8 in accordance with ASTM D 4214 test procedures, and the color change shall not exceed 5 CIE or Hunter Lab color difference (delta E) units in accordance with ASTM D 2244.

2.4.4 Humidity Test

When subjected to a humidity cabinet test in accordance with ASTM D 2247 for 1000 hours, a scored panel shall show no signs of blistering, cracking, creepage or corrosion.

2.4.5 Impact Resistance

Factory-painted sheet shall withstand direct and reverse impact in

accordance with ASTM D 2794 13 mm (0.500 inch) diameter hemispherical head indenter, equal to 6.7 times the metal thickness in mm, expressed in N-meters, with no loss of adhesion.

2.4.6 Abrasion Resistance Test

When subjected to the falling sand test in accordance with ASTM D 968, Method A, the coating system shall withstand a minimum of 50 liters of sand before the appearance of the base metal. The term "appearance of base metal" refers to the metallic coating on steel or the aluminum base metal.

2.4.7 Specular Gloss

Finished roof surfaces shall have a specular gloss value of 10 or less at an angle of 85 degrees when measured in accordance with ASTM D 523.

2.4.8 Pollution Resistance

Coating shall show no visual effects when covered spot tested in a 10 percent hydrochloric acid solution for 24 hours in accordance with ASTM D 1308.

2.5 UNDERLAYMENTS

2.5.1 NOT USED

2.5.2 Rubberized Underlayment

Rubberized underlayment shall be equal to "Ice and Water Shield" as manufactured by Grace Construction Products, "Winterguard" as manufactured by CertainTeed Corporation, or "Weather Watch Ice and Water Barrier" as manufactured by GAF Building Materials Corporation.

2.6 INSULATION

Thermal resistance of insulation shall be not less than the R-values shown on the contract drawings. R-values shall be determined at a mean temperature of 24 degrees C (75 degrees F) in accordance with ASTM C 518. Insulation shall be a standard product with the insulation manufacturer, factory marked or identified with insulation manufacturer's name or trademark and R-value. Identification shall be on individual pieces or individual packages. Insulation shall have a flame spread not in excess of 75 and a smoke developed rating not in excess of 150 when tested in accordance with ASTM E 84. The stated R-value of the insulation shall be certified by an independent Registered Professional Engineer if tests are conducted in the insulation manufacturer's laboratory.

2.6.1 Rigid Board Insulation for Use Above a Roof Deck

2.6.1.1 Polyurethane or Polyisocyanurate

Polyurethane or polyisocyanurate insulation shall conform to ASTM C 1289, Type I, Class 2 (having a minimum recovered material content of 9 percent by weight of core material in the polyisocyanurate portion). For impermeable faced polyisocyanurate (Ex: aluminum foil) the maximum design R-value per 25 mm (1 inch) of insulation used shall be 1.27.

2.6.2 Blanket Insulation

Blanket insulation shall conform to ASTM C 991.

2.7 INSULATION RETAINERS

Insulation retainers shall be type, size, and design necessary to adequately hold the insulation and to provide a neat appearance. Metallic retaining members shall be nonferrous or have a nonferrous coating. Nonmetallic retaining members, including adhesives used in conjunction with mechanical retainers or at insulation seams, shall have a fire resistance classification not less than that permitted for the insulation.

2.8 SEALANT

Sealant shall be an elastomeric type containing no oil or asphalt. Exposed sealant shall be [colored to match the applicable building color] [clear] and shall cure to a rubberlike consistency.

2.9 GASKETS AND INSULATING COMPOUNDS

Gaskets and insulating compounds shall be nonabsorptive and suitable for insulating contact points of incompatible materials. Insulating compounds shall be nonrunning after drying.

2.10 VAPOR RETARDER

2.10.1 Vapor Retarders as Integral Facing

Insulation facing shall have a permeability of 5.7 ng per Pa-second-square meter (0.1 perm) or less when tested in accordance with ASTM E 96. Facing shall be white of reinforced foil with a vinyl finish; except that unreinforced foil with a natural finish may be used in concealed locations. Facings and finishes shall be factory applied.

2.10.2 Vapor Retarders Separate from Insulation

Vapor retarder material shall be polyethylene sheeting conforming to ASTM D 4397. A single ply of 0.25 mm polyethylene sheet; or, at the Contractor's option, a double ply of 0.15 mm (6 mil) polyethylene sheet shall be used. A fully compatible polyethylene tape which has equal or better water vapor control characteristics than the vapor retarder material shall be provided. A cloth industrial duct tape in a utility grade shall also be provided to use as needed to protect the vapor retarder from puncturing.

2.10.3 Slip Sheet for Use With Vapor Retarder

Slip sheet for use with vapor retarder shall be a 0.24 kg per square meter rosin-sized, unsaturated building paper.

PART 3 EXECUTION

3.1 INSTALLATION

Installation shall be in accordance with the manufacturer's erection instructions and drawings. Dissimilar materials which are not compatible when contacting each other shall be insulated by means of gaskets or insulating compounds. Improper or mislocated drill holes shall be plugged with an oversize screw fastener and gasketed washer; however, sheets with an excess of such holes or with such holes in critical locations shall not be used. Exposed surfaces and edges shall be kept clean and free from

sealant, metal cuttings, hazardous burrs, and other foreign material. Stained, discolored, or damaged sheets shall be removed from the site.

3.1.1 Roofing

Side laps shall be laid away from the prevailing winds. Side and end lap distances, joint sealing, and fastening and spacing of fasteners shall be in accordance with manufacturer's standard practice. Spacing of exposed fasteners shall present an orderly appearance. Side laps and end laps of roof panels and joints at accessories shall be sealed. Fasteners shall be driven normal to the surface. Method of applying joint sealant shall conform to the manufacturer's recommendation to achieve a complete weathertight installation. Accessories shall be fastened into substrate, except as otherwise approved. Closure strips shall be provided as indicated and where necessary to provide weathertight construction.

3.1.2 Field forming of Roof Panels

When roofing panels are formed from factory-color-finished steel coils at the project site, the same care and quality control measures that are taken in shop forming of roofing panels shall be observed. Rollformer shall be operated by the metal roofing manufacturer's representative. In cold weather conditions, preheating of the steel coils to be field formed shall be performed as necessary just prior to the rolling operations.

3.1.3 Underlayment

Underlayment types shall be installed where shown on the drawings; they shall be installed directly over the substrate. If a roof panel rests directly on the underlayments, a slip sheet shall be installed as a top layer, beneath the metal roofing panels, to prevent adhesion. All underlayments shall be installed so that successive strips overlap the next lower strip in shingle fashion. Underlayments shall be installed in accordance with the manufacturer's written instructions. The underlayments shall ensure that any water that penetrates below the metal roofing panels will drain outside of the building envelope.

3.2 INSULATION INSTALLATION

Insulation shall be installed as indicated and in accordance with manufacturer's instructions. Insulation shall be continuous over entire roof surface. Where expansion joints, terminations, and other connections are made, the cavity shall be filled with batt insulation and vapor retarder providing equivalent R-Value and perm rating as remaining insulation.

3.2.1 NOT USED

3.2.2 Board Insulation in Cool Climates

A layer of unfaced blanket insulation shall be placed over the board insulation and held tight against the metal roofing.

3.3 PROTECTION OF VAPOR RETARDER FROM ROOF DECK

A cloth industrial duct tape shall be adhered over all the seams of metal roof decking, at any penetration edges, and at all surface areas exhibiting sharp burrs or similar protrusions. For other types of roof decking, cloth industrial duct tape shall be adhered over all irregularities which could

potentially puncture polyethylene membrane.

3.4 VAPOR RETARDER INSTALLATION

3.4.1 NOT USED

3.4.2 Polyethylene Vapor Retarder

The polyethylene vapor retarder membrane shall be installed over the entire surface. A fully compatible polyethylene tape shall be used to seal the edges of the sheets to provide a vapor tight membrane. Sheet edges shall be lapped not less than 150 mm (6 inches). Sufficient material shall be provided to avoid inducing stresses in the sheets due to stretching or binding. All tears or punctures that are visible in the finished surface at any time during the construction process shall be sealed with polyethylene tape.

3.5 SLIP SHEET INSTALLATION

A slip sheet shall be laid over the blanket insulation facing to prevent the vinyl facing from adhering to the metal roofing.

FIVE (5) YEAR WARRANTY FOR NON-STRUCTURAL METAL ROOFING SYSTEM

PROJECT DESCRIPTION AND LOCATION (Include Bldg. No.):_____
CORPS OF ENGINEERS CONTRACT NUMBER:_____
SPECIFICATION SECTION NUMBER & DESCRIPTION:
07412 NON-STRUCTURAL METAL ROOFING SYSTEM
_____

CONTRACTOR:_____
ADDRESS:_____
POINT OF CONTACT:_____
TELEPHONE NUMBER:_____

OWNER:_____
ADDRESS:_____
POINT OF CONTACT:_____
TELEPHONE NUMBER:_____

CONSTRUCTION AGENT:_____
ADDRESS:_____
POINT OF CONTACT:_____
TELEPHONE NUMBER:_____

THE ABOVE FACILITY IS WARRANTED BY_____ FOR A PERIOD OF FIVE (5) YEARS AGAINST LEAKAGE. THE NON-STRUCTURAL METAL ROOFING SYSTEM COVERED UNDER THIS WARRANTY SHALL INCLUDE THE ENTIRE ROOFING SYSTEM INCLUDING THE METAL ROOF PANELS; ALL ACCESSORIES, COMPONENTS, AND TRIM; INCLUDING PENETRATIONS SUCH AS VENTS, CURBS, SKYLIGHTS; INTERIOR OR EXTERIOR GUTTERS AND DOWNSPOUTS; EAVES, RIDGE, HIP, VALLEY, RAKE, GABLE, WALL, OR OTHER ROOF SYSTEM FLASHINGS INSTALLED TO PROVIDE A WEATHERTIGHT ROOF SYSTEM; AND ITEMS SPECIFIED IN OTHER SECTIONS OF THE SPECIFICATIONS THAT ARE PART OF THE NON-STRUCTURAL METAL ROOFING SYSTEM. ALL LEAKS SHALL BE REPAIRED AS APPROVED BY THE CONTRACTING OFFICER. THIS WARRANTY SHALL COVER THE ENTIRE COST OF REPAIR OR REPLACEMENT, INCLUDING ALL MATERIAL, LABOR, AND RELATED MARKUPS. THE ABOVE REFERENCED WARRANTY COMMENCED ON THE DATE OF FINAL ACCEPTANCE ON _____ AND WILL REMAIN IN EFFECT FOR STATED DURATION FROM THIS DATE

SIGNED, DATED, AND NOTARIZED (BY COMPANY PRESIDENT)

_____
(Company President) (Date)

(SEE REVERSE SIDE FOR SUPPLEMENTAL PROVISIONS AND EXCLUSIONS)

FIVE (5) YEAR WARRANTY FOR NON-STRUCTURAL METAL ROOFING SYSTEM
(continued)

THE CONTRACTOR MAY SUPPLEMENT THIS WARRANTY WITH WRITTEN WARRANTIES FROM THE INSTALLER AND/OR MANUFACTURER OF THE NON-STRUCTURAL METAL ROOFING SYSTEM, WHICH SHALL BE SUBMITTED ALONG WITH THE CONTRACTOR'S WARRANTY; HOWEVER, THE CONTRACTOR WILL BE ULTIMATELY RESPONSIBLE FOR THE WARRANTY AS OUTLINED IN THE SPECIFICATIONS AND AS INDICATED IN THIS WARRANTY EXAMPLE.

EXCLUSIONS FROM COVERAGE

1. NATURAL DISASTERS, ACTS OF GOD (LIGHTNING, FIRE, EXPLOSIONS, HURRICANES, TORNADOES, EARTHQUAKES, AND HAIL).

2. ACTS OF NEGLIGENCE OR ABUSE OR MISUSE BY GOVERNMENT OR OTHER PERSONNEL, INCLUDING ACCIDENTS, VANDALISM, CIVIL DISOBEDIENCE, WAR, OR DAMAGE CAUSED BY FALLING OBJECTS.

3. DAMAGE BY STRUCTURAL FAILURE, SETTLEMENT, MOVEMENT, DISTORTION, WARPAGE, OR DISPLACEMENT OF THE BUILDING STRUCTURE OR ALTERATIONS MADE TO THE BUILDING.

4. CORROSION CAUSED BY EXPOSURE TO MARINE (SALT WATER) ATMOSPHERE; CONSTANT SPRAY OF EITHER SALT OR FRESH WATER; CORROSIVE CHEMICALS, ASH OR FUMES GENERATED OR RELEASED INSIDE OR OUTSIDE THE BUILDING FROM CHEMICAL PLANTS, FOUNDRIES, PLATING WORKS, KILNS, FERTILIZER FACTORIES, PAPER PLANTS, AND THE LIKE.

5. FAILURE OF ANY PART OF THE NON-STRUCTURAL METAL ROOFING SYSTEM DUE TO ACTIONS BY THE OWNER TO INHIBIT FREE DRAINAGE FROM THE ROOF AND ALLOW PONDING WATER. CONTRACTOR'S DESIGN SHALL INSURE FREE DRAINAGE FROM THE ROOF AND NOT ALLOW PONDING WATER.

6. THIS WARRANTY APPLIES TO THE NON-STRUCTURAL METAL ROOFING SYSTEM. IT DOES NOT INCLUDE ANY CONSEQUENTIAL DAMAGE TO THE BUILDING INTERIOR OR CONTENTS WHICH IS COVERED BY THE WARRANTY OF CONSTRUCTION CLAUSE INCLUDED IN THIS CONTRACT.

7. THIS WARRANTY CANNOT BE TRANSFERRED TO ANOTHER OWNER WITHOUT WRITTEN CONSENT OF THE CONTRACTOR; AND THIS WARRANTY AND THE CONTRACT PROVISIONS WILL TAKE PRECEDENCE OVER ANY CONFLICTS WITH STATE STATUTES, UNLESS OTHERWISE APPROVED IN WRITING BY THE CONTRACTING OFFICER.

RECEIPT OF NOTICE, BY TELEPHONE OR IN WRITING, FROM THE OWNER OR CONTRACTING OFFICER ABOUT LEAKS SHALL BE RESPONDED TO WITHIN 48 HOURS OF RECEIPT OF NOTICE. EMERGENCY REPAIRS TO PREVENT FURTHER ROOF LEAKS SHALL BE INITIATED IMMEDIATELY AND A WRITTEN PLAN SHALL BE SUBMITTED FOR APPROVAL TO REPAIR OR REPLACE THIS NON-STRUCTURAL METAL ROOFING SYSTEM. ACTUAL WORK FOR PERMANENT REPAIRS OR REPLACEMENT SHALL BE STARTED WITHIN 30 DAYS AFTER RECEIPT OF NOTICE, AND COMPLETED WITHIN A REASONABLE TIME FRAME. IF THE CONTRACTOR FAILS TO ADEQUATELY RESPOND TO THE WARRANTY PROVISIONS, AS STATED IN THE CONTRACT AND AS CONTAINED HEREIN, THE CONTRACTING OFFICER MAY HAVE THE NON-STRUCTURAL METAL ROOFING SYSTEM REPAIRED OR REPLACED BY OTHERS AND CHARGE THE COST TO THE CONTRACTOR.

A FRAMED COPY OF THIS WARRANTY SHALL BE POSTED IN THE MECHANICAL ROOM OR OTHER APPROVED LOCATION DURING THE ENTIRE WARRANTY PERIOD.

-- End of Section --

SECTION 07413

METAL SIDING

PART 1 GENERAL

1.1 REFERENCES

The publications listed below form a part of this specification to the extent referenced. The publications are referred to in the text by basic designation only.

ALUMINUM ASSOCIATION (AA)

AA-02	(1994) Aluminum Design Manual: Specifications and Guidelines for Aluminum Structures

AMERICAN IRON AND STEEL INSTITUTE (AISI)

AISI-01	(1986; Addenda 1989) Cold-Formed Steel Design Manual

AMERICAN SOCIETY FOR TESTING AND MATERIALS (ASTM)

ASTM A 463	(1996a) Steel Sheet, Aluminum-Coated, by the Hot-Dip Process
ASTM A 653	(1996) Steel Sheet, Zinc-Coated (Galvanized) or Zinc-Iron Alloy-Coated (Galvannealed) by the Hot-Dip Process
ASTM A 792	(1995) Steel Sheet, 55% Aluminum-Zinc Alloy-Coated by the Hot-Dip Process
ASTM B 117	(1994) Operating Salt Spray (Fog) Testing Apparatus
ASTM D 522	(1993a) Mandrel Bend Test of Attached Organic Coatings
ASTM D 714	(1987; R 1994) Evaluating Degree of Blistering of Paints
ASTM D 968	(1993) Abrasion Resistance of Organic Coatings by Falling Abrasive
ASTM D 1654	(1992) Evaluation of Painted or Coated Specimens Subjected to Corrosive Environments
ASTM D 2244	(1993) Calculation of Color Differences from Instrumentally Measured Color Coordinates
ASTM D 2247	(1994) Testing Water Resistance of Coatings

	in 100% Relative Humidity
ASTM D 2794	(1993) Resistance of Organic Coatings to the Effects of Rapid Deformation (Impact)
ASTM D 3359	(1995) Measuring Adhesion by Tape Test
ASTM D 4214	(1989) Evaluating the Degree of Chalking of Exterior Paint Films
ASTM D 4397	(1991) Polyethylene Sheeting for Construction, Industrial, and Agricultural Applications
ASTM D 4587	(1991) Conducting Tests on Paint and Related Coatings and Materials Using a Fluorescent UV-Condensation Light- and Water- Exposure Apparatus

AMERICAN SOCIETY OF CIVIL ENGINEERS (ASCE)

ASCE 7	(1995) Minimum Design Loads for Buildings and Other Structures

1.2 GENERAL REQUIREMENTS

1.2.1 Design

Criteria, loading combinations, and definitions shall be in accordance with ASCE 7. Maximum calculated fiber stress shall not exceed the allowable value in the AISI or AA manuals; a one third overstress for wind is allowed. Midspan deflection under maximum design loads shall be limited to L/180. Contract drawings show the design wind loads and the extent and general assembly details of the metal siding. Members and connections not shown on the drawings shall be designed by the Contractor. Siding panels and accessories shall be the products of the same manufacturer. Steel siding design shall be in accordance with AISI-01. Aluminum siding design shall be in accordance with AA-02.

1.2.2 Architectural Considerations

Panels profile shall be as shown on the drawings.

1.3 SUBMITTALS

Government approval is required for submittals with a "GA" designation; submittals having an "FIO" designation are for information only. The following shall be submitted in accordance with Section 01330 SUBMITTAL PROCEDURES:

SD-04 Drawings

Siding; GA.

Drawings consisting of catalog cuts, design and erection drawings, shop coating and finishing specifications, and other data as necessary to clearly describe design, materials, sizes, layouts, construction details, fasteners, and erection. Drawings shall be accompanied by engineering design calculations for the siding panels.

SD-13 Certificates

Siding; GA. Installation; GA. Accessories; GA.

Certificates attesting that the panels and accessories conform to the requirements specified. Certified laboratory test reports showing that the sheets to be furnished are produced under a continuing quality control program and that a representative sample consisting of not less than 5 pieces has been tested and has met the quality standards specified for factory color finish. Mill certification for structural bolts, siding, and wall liner panels.

Insulation; GA.

Certificate attesting that the insulation furnished for the project contains recovered material, and showing an estimated percent of such recovered material.

SD-14 Samples

Accessories; FIO.

One sample of each type of flashing, trim, closure, cap and similar items. Size shall be sufficient to show construction and configuration.

Siding; GA.

One piece of each type and finish (exterior and interior) to be used, 225 mm long, full width.

Fasteners; FIO.

Two samples of each type to be used with statement regarding intended use. If so requested, random samples of bolts, nuts, and washers as delivered to the jobsite shall be taken in the presence of the Contracting Officer and provided to the Contracting Officer for testing to establish compliance with specified requirements.

Insulation; FIO.

One piece of each type to be used, and descriptive data covering installation.

Gaskets and Insulating Compounds; FIO.

Two samples of each type to be used and descriptive data.

Sealant; FIO.

One sample, approximately 0.5 kg, and descriptive data.

Wall Liners; GA.

One piece, 225 mm long, full width.

1.4 DELIVERY AND STORAGE

Materials shall be delivered to the site in a dry and undamaged condition

and stored out of contact with the ground. Materials shall be covered with weathertight coverings and kept dry. Storage accommodations for metal siding shall provide good air circulation and protection from surface staining.

1.5 WARRANTIES

The Contractor shall provide a weather tight warranty for the metal siding for a period of 20 years to include siding panel assembly, 10 years against the wear of color finish, and 10 years against the corrosion of fasteners caused by ordinary wear and tear by the elements. The warranties shall start upon final acceptance of the work or the date the Government takes possession, whichever is earlier.

PART 2 PRODUCTS

2.1 SIDING

Panels shall be steel and shall have a factory color finish. Length of sheets shall be sufficient to cover the entire height of any unbroken wall surface when length of run is 9 m or less. When length of run exceeds 9 m, each sheet in the run shall extend over two or more spans. Sheets longer than 9 m may be furnished if approved by the Contracting Officer. Width of sheets with overlapping configurations shall provide not less than 600 mm of coverage in place, and those with interlocking ribs shall provide not less than 300 mm of coverage in place.

2.1.1 Wall Panels

Wall panels shall have edge configurations for overlapping adjacent sheets. Wall panels shall be fastened to framework using exposed fasteners.

2.1.2 Steel Panels

Zinc-coated steel conforming to ASTM A 653; aluminum-zinc alloy coated steel conforming to ASTM A 792, AZ [55] [50] coating; or aluminum-coated steel conforming to ASTM A 463, Type 2, coating designation T2 65. Uncoated wall panels shall be 0.6 mm thick minimum.

2.2 FACTORY COLOR FINISH

Panels shall have a factory applied polyvinylidene fluoride finish on the exposed side. The exterior finish shall consist of a baked-on topcoat with an appropriate prime coat. Color shall match the color indicated on the drawings. The exterior coating shall be a nominal 0.050 mm thickness consisting of a topcoat of not less than 0.018 mm dry film thickness and the paint manufacturer's recommended primer of not less than 0.025 mm thickness. The interior color finish shall consist of a 0.005 mm thick prime coat. The exterior color finish shall meet the test requirements specified below.

2.2.1 Salt Spray Test

A sample of the sheets shall withstand a salt spray test for a minimum of 1000 hours in accordance with ASTM B 117, including the scribe requirement in the test. Immediately upon removal of the panel from the test, the coating shall receive a rating of not less than 8F, few no. 8 blisters, as determined by ASTM D 714; and a rating of 6, 3 mm failure at scribe, as determined by ASTM D 1654.

2.2.2 Formability Test

When subjected to testing in accordance with ASTM D 522 Method B, 3 mm diameter mandrel, the coating film shall show no evidence of fracturing to the naked eye.

2.2.3 Accelerated Weathering, Chalking Resistance and Color Change

A sample of the sheets shall be tested in accordance with ASTM D 4587, test condition [B] [D] for [_____] total hours. The coating shall withstand the weathering test without cracking, peeling, blistering, loss of adhesion of the protective coating, or corrosion of the base metal. Protective coating that can be readily removed from the base metal with tape in accordance with ASTM D 3359, Test Method B, shall be considered as an area indicating loss of adhesion. Following the accelerated weathering test, the coating shall have a chalk rating not less than No. 8 in accordance with ASTM D 4214 test procedures, and the color change shall not exceed 5 CIE or Hunter Lab color difference (delta E) units in accordance with ASTM D 2244. For sheets required to have a low gloss finish, the chalk rating shall be not less than No. 6 and the color difference shall be not greater than 7 units.

2.2.4 Humidity Test

When subjected to a humidity cabinet test in accordance with ASTM D 2247 for 1000 hours, a scored panel shall show no signs of blistering, cracking, creepage or corrosion.

2.2.5 Impact Resistance

Factory-painted sheet shall withstand direct and reverse impact in accordance with ASTM D 2794 13 mm diameter hemispherical head indenter, equal to 6.7 times the metal thickness in mm, expressed in Newton-meters, with no loss of adhesion.

2.2.6 Abrasion Resistance Test

When subjected to the falling sand test in accordance with ASTM D 968, Method A, the coating system shall withstand a minimum of [50] [80] liters of sand before the appearance of the base metal. The term "appearance of base metal" refers to the metallic coating on steel or the aluminum base metal.

2.3 ACCESSORIES

Flashing, trim, metal closure strips, caps, and similar metal accessories shall be the manufacturer's standard products. Exposed metal accessories shall be finished to match the panels furnished. Molded closure strips shall be bituminous-saturated fiber, closed-cell or solid-cell synthetic rubber or neoprene, or polyvinyl chlorided premolded to match configuration of the panels and shall not absorb or retain water.

2.4 FASTENERS

Fasteners for steel panels shall be zinc-coated steel, aluminum, corrosion resisting steel, or nylon capped steel, type and size specified below or as otherwise approved for the applicable requirements. Fasteners for aluminum panels shall be aluminum or corrosion resisting steel. Fasteners for attaching wall panels to supports shall provide both tensile and shear

strength of not less than 3340 N per fastener. Fasteners for accessories shall be the manufacturer's standard. Exposed wall fasteners shall be color finished or provided with plastic color caps to match the panels. Nonpenetrating fastener system for wall panels using concealed clips shall be manufacturer's standard for the system provided.

2.4.1 Screws

Screws shall be as recommended by the manufacturer.

2.4.2 End-Welded Studs

Automatic end-welded studs shall be shouldered type with a shank diameter of not less than 5 mm and cap or nut for holding panels against the shoulder.

2.4.3 Explosive Actuated Fasteners

Fasteners for use with explosive actuated tools shall have a shank of not less than 3.68 mm with a shank length of not less than 13 mm for fastening panels to steel and not less than 25 mm for fastening panels to concrete.

2.4.4 Blind Rivets

Blind rivets shall be aluminum with 5 mm nominal diameter shank or stainless steel with 3 mm nominal diameter shank. Rivets shall be threaded stem type if used for other than the fastening of trim. Rivets with hollow stems shall have closed ends.

2.4.5 Bolts

Bolts shall be not less than 6 mm diameter, shouldered or plain shank as required, with proper nuts.

2.5 NOT USED

2.6 VAPOR RETARDER

2.6.1 NOT USED

2.6.2 Vapor Retarders Separate from Insulation

Vapor retarder material shall be polyethylene sheeting conforming to ASTM D 4397. A single ply of 0.25 mm polyethylene sheet or, at the Contractor's option, a double ply of 0.15 mm polyethylene sheet shall be used. A fully compatible polyethylene tape which has equal or better water vapor control characteristics than the vapor retarder material shall be provided. A cloth industrial duct tape in a utility grade shall also be provided to use as needed to protect the vapor retarder from puncturing.

2.7 WALL LINERS

Wall liners shall be 0.6 mm thick minimum for aluminum or 0.45 mm thick minimum for steel with the same composition specified for siding, and formed or patterned to prevent waviness and distortion, and shall extend from 3M to the ceiling. Matching metal trim shall be provided at base of wall liner, top of wall liner, around openings in walls and over interior and exterior corners. Wall liners shall be factory primed.

2.8 SEALANT

Sealant shall be an elastomeric type containing no oil or asphalt. Exposed sealant shall be clear and shall cure to a rubberlike consistency.

2.9 GASKETS AND INSULATING COMPOUNDS

Gaskets and insulating compounds shall be nonabsorptive and suitable for insulating contact points of incompatible materials. Insulating compounds shall be nonrunning after drying.

PART 3 EXECUTION

3.1 INSTALLATION

Installation shall be in accordance with the manufacturer's erection instructions and drawings. Dissimilar materials which are not compatible when contacting each other shall be insulated from each other by means of gaskets or insulating compounds. Improper or mislocated drill holes shall be plugged with an oversize screw fastener and gasketed washer; however, panels with an excess of such holes or with such holes in critical locations shall not be used. Exposed surfaces and edges shall be kept clean and free from sealant, metal cuttings, hazardous burrs, and other foreign material. Stained, discolored, or damaged sheets shall be removed from the site.

3.1.1 Siding and Accessories

Siding shall be applied with the longitudinal configurations in the vertical position. Accessories shall be fastened into framing members, except as otherwise approved. Closure strips shall be provided as indicated and where necessary to provide weathertight construction.

3.1.1.1 Lap Type Panels with Exposed Fasteners

End laps shall be made over framing members with fasteners into framing members approximately 50 mm from the end of the overlapping sheet. Side laps shall be laid away from the prevailing winds. Spacing of fasteners shall present an orderly appearance and shall not exceed: 200 mm on center at end laps of siding, 200 mm on center at connection of siding to intermediate supports, and 450 mm on center at side laps of siding except when otherwise approved. Side and end laps of siding and joints at accessories shall be sealed. Fasteners shall be installed in straight lines within a tolerance of 13 mm in the length of a bay. Fasteners shall be driven normal to the surface and to a uniform depth to seat the gasketed washers properly.

3.1.1.2 Concealed Fastener Wall Panels

Panels shall be fastened to framing members with concealed fastening clips or other concealed devices standard with the manufacturer. Spacing of fastening clips and fasteners shall be in accordance with the manufacturer's written instructions. Spacing of fasteners and anchor clips along the panel interlocking ribs shall not exceed 300 mm on center except when otherwise approved. Fasteners shall not puncture metal sheets except as approved for flashing, closures, and trim; exposed fasteners shall be installed in straight lines. Interlocking ribs shall be sealed with factory-applied sealant. Joints at accessories shall be sealed.

-- End of Section --

SECTION 07600

SHEET METALWORK, GENERAL

PART 1 GENERAL

1.1 REFERENCES

The publications listed below form a part of this specification to the extent referenced. The publications are referred to in the text by basic designation only.

AMERICAN SOCIETY FOR TESTING AND MATERIALS (ASTM)

ASTM A 167	(1996) Stainless and Heat-Resisting Chromium-Nickel Steel Plate, Sheet, and Strip
ASTM B 32	(1996) Solder Metal
ASTM B 209	(1996) Aluminum and Aluminum-Alloy Sheet and Plate
ASTM B 221	(1996) Aluminum and Aluminum-Alloy Extruded Bars, Rods, Wire, Profiles, and Tubes
ASTM B 370	(1992) Copper Sheet and Strip for Building Construction
ASTM D 226	(1997) Asphalt-Saturated Organic Felt Used in Roofing and Waterproofing
ASTM D 543	(1995) Evaluating the Resistance of Plastics to Chemical Reagents
ASTM D 822	(1996) Conducting Tests on Paint and Related Coatings and Materials Using Filtered Open-Flame Carbon-Arc Exposure Apparatus
ASTM D 828	(1993) Tensile Properties of Paper and Paperboard Using Constant-Rate-of-Elongation-Apparatus
ASTM D 1784	(1996) Rigid Poly(Vinyl Chloride) (PVC) Compounds and Chlorinated Poly(Vinyl Chloride) (CPVC) Compounds
ASTM D 2822	(1991; R 1997) Asphalt Roof Cement
ASTM D 4022	(1994) Coal Tar Roof Cement, Asbestos Containing
ASTM D 4586	(1993) Asphalt Roof Cement, Asbestos Free
ASTM E 96	(1995) Water Vapor Transmission of Materials

INSECT SCREENING WEAVERS ASSOCIATION (ISWA)

ISWA IWS 089	(1990) Recommended Standards and Specifications for Insect Wire Screening (Wire Fabric)

SHEET METAL AND AIR CONDITIONING CONTRACTORS NATIONAL ASSOCIATION (SMACNA)

SMACNA-02	(1993; Errata) Architectural Sheet Metal Manual

1.2 GENERAL REQUIREMENTS

Sheet metalwork shall be accomplished to form weathertight construction without waves, warps, buckles, fastening stresses or distortion, and shall allow for expansion and contraction.

1.2.1 Coordination

Cutting, fitting, drilling, and other operations in connection with sheet metal required to accommodate the work of other trades shall be performed by sheet metal mechanics. Application of bituminous strip flashing over various sheet metal items is covered in Section 07510 BUILT-UP ROOFING. Installation of sheet metal items used in conjunction with roofing shall be coordinated with roofing work to permit continuous roofing operations. Sheet metalwork pertaining to heating, ventilating, and air conditioning is specified in Section 15895.

1.3 SUBMITTALS

Government approval is required for submittals with a "GA" designation; submittals having an "FIO" designation are for information only. The following shall be submitted in accordance with Section 01330 SUBMITTAL PROCEDURES:

SD-04 Drawings

Materials; GA.

Drawings of sheet metal items showing weights, gauges or thicknesses; types of materials; expansion-joint spacing; fabrication details; and installation procedures.

1.4 DELIVERY, STORAGE, AND HANDLING

Materials shall be adequately packaged and protected during shipment and shall be inspected for damage, dampness, and wet-storage stains upon delivery to the jobsite. Materials shall be clearly labeled as to type and manufacturer. Sheet metal items shall be carefully handled to avoid damage. Materials shall be stored in dry, ventilated areas until immediately before installation.

PART 2 PRODUCTS

2.1 MATERIALS

Lead, lead-coated metal, and galvanized steel shall not be used. Any metal

listed by SMACNA-02 for a particular item may be used, unless otherwise specified or indicated. Materials shall conform to the requirements specified below and to the thicknesses and configurations established in SMACNA-02. Different items need not be of the same metal, except that if copper is selected for any exposed item, all exposed items shall be copper.

2.1.1 Accessories

Accessories and other items essential to complete the sheet metal installation, though not specifically indicated or specified, shall be provided.

2.1.2 Aluminum Extrusions

ASTM B 221, Alloy 6063, Temper T5.

2.1.3 Bituminous Cement

Type I asphalt cement conforming to ASTM D 2822 or ASTM D 4586. For coal tar roofing; coal tar cement conforming to ASTM D 4022.

2.1.4 Sealant

Unless otherwise specified, sealant shall be an elastomeric weather resistant sealant as specified in Section 07900 JOINT SEALING.

2.1.5 Fasteners

Fasteners shall be compatible with the fastened material and shall be the type best suited for the application.

2.1.6 Felt

ASTM D 226, Type I.

2.1.7 Polyvinyl Chloride (PVC) Reglets

ASTM D 1784, Class 14333D, 1.9 mm (0.075 inch) minimum thickness.

2.1.8 Aluminum Alloy Sheet and Plate

ASTM B 209, anodized color dark bronze, form, alloy, and temper appropriate for use.

2.1.9 Copper

ASTM B 370, Temper H 00.

2.1.10 Stainless Steel

ASTM A 167, Type 302 or 304; fully annealed, dead soft temper.

2.1.11 Solder

ASTM B 32, 95-5 tin-antimony.

2.1.12 Through-Wall Flashing

a. Electro-sheet copper not less than 0.14 kg (5 ounces), factory

coated both sides with acid- and alkali-resistant bituminous compound not less than 1.8 kg per square meter (6 ounces per square foot) or factory covered both sides with asphalt-saturated cotton fabric, asphalt saturated glass-fiber fabric, or with 18 kg (40 pound) reinforced kraft paper bonded with asphalt.

b. Stainless steel, Type 304, not less than 0.08 mm (0.003 inch) thick, completely encased by and permanently bonded on both sides to 23 kg (50 pound) high strength bituminized crepe kraft paper, using hot asphalt, heat, and pressure.

c. Nonreinforced, waterproof, impermeable extruded elastomeric single ply sheeting not less than 0.76 mm (30 mils) thick.

d. 0.09 kg (Three ounce) copper sheet, with 0.05 mm (2 mils) of dense, clear, polyethylene sheet bonded to each side of the copper.

e. Other through-wall flashing material may be used provided the following performance criteria are met.

(1) No cracking or flaking when bent 180 degrees over a 0.8 mm (1/32 inch) mandrel and rebent at the same point over the same mandrel in an opposite direction at 0 degree C (32 degrees F).

(2) Water vapor permeability not more than 115 ng per Paper second per square meter (2 perms) (2 perms) when tested in accordance with ASTM E 96.

(3) Minimum breaking strength of 24 kgf/15 mm width in the weakest direction when tested in accordance with ASTM D 828.

(4) No visible deterioration after being subjected to a 400-hour direct weathering test in accordance with ASTM D 822.

(5) No shrinkage in length or width and less than 5 percent loss of breaking strength after a 10-day immersion, per ASTM D 543, in 5 percent (by weight) solutions, respectively, of sulfuric acid, hydrochloric acid, sodium hydroxide or saturated lime (calcium hydroxide).

2.1.13 Louver Screen

Type I commercial bronze insect screening conforming to ISWA IWS 089 or Plastic-coated glass fiber mesh.

PART 3 EXECUTION

3.1 GENERAL

Items such as gutters, downspouts and louvers shall be fabricated in conformance with SMACNA-02 and as indicated. Unless otherwise specified or indicated, exposed edges shall be folded back to form a 13 mm (1/2 inch) hem on the concealed side, and bottom edges of exposed vertical surfaces shall be angled to form drips. Bituminous cement shall not be placed in contact with roofing membranes other than built-up roofing.

3.2 EXPANSION JOINTS

Expansion joints shall be provided as specified in SMACNA-02. Expansion

joints in continuous sheet metal shall be provided at 12.0 meter (40 foot) intervals for copper and stainless steel and at 9.6 meter (32 foot) intervals for aluminum, except extruded aluminum gravel stops and fasciae which shall have expansion joints at not more than 3.6 meter (12 foot) spacing. Joints shall be evenly spaced. An additional joint shall be provided where the distance between the last expansion joint and the end of the continuous run is more than half the required interval spacing.

3.3 PROTECTION OF ALUMINUM

Aluminum shall not be used where it will be in contact with copper or where it will contact water which flows over copper surfaces. Aluminum that will be in contact with wet or pressure-treated wood, mortar, concrete, masonry, or ferrous metals shall be protected against galvanic or corrosive action by one of the following methods:

3.3.1 Paint

Aluminum surfaces shall be solvent cleaned and given one coat of zinc-molybdate primer and one coat of aluminum paint as specified in Section 09900 PAINTING, GENERAL.

3.3.2 Nonabsorptive Tape or Gasket

Nonabsorptive tape or gasket shall be placed between the adjoining surfaces and cemented to the aluminum surface using a cement compatible with aluminum.

3.4 CONNECTIONS AND JOINTING

3.4.1 Soldering

Soldering shall apply to copper, and stainless steel items. Edges of sheet metal shall be pretinned before soldering is begun. Soldering shall be done slowly with well heated soldering irons so as to thoroughly heat the seams and completely sweat the solder through the full width of the seam. Edges of stainless steel to be pretinned shall be treated with soldering acid flux. Soldering shall follow immediately after application of the flux. Upon completion of soldering, the acid flux residue shall be thoroughly cleaned from the sheet metal with a water solution of washing soda and rinsed with clean water.

3.4.2 Riveting

Joints in aluminum sheets 1.0 mm (0.040 inch) or less in thickness shall be mechanically made.

3.4.3 Seaming

Flat-lock and soldered-lap seams shall finish not less than 25 mm (1 inch) wide. Unsoldered plain-lap seams shall lap not less than 75 mm (3 inches) unless otherwise specified. Flat seams shall be made in the direction of the flow.

3.5 CLEATS

A continuous cleat shall be provided where indicated or specified to secure loose edges of the sheet metalwork. Butt joints of cleats shall be spaced approximately 3 mm (1/8 inch) apart. The cleat shall be fastened to

supporting wood construction with nails evenly spaced not over 300 mm (12 inches) on centers. Where the fastening is to be made to concrete or masonry, screws shall be used and shall be driven in expansion shields set in concrete or masonry.

3.6 GUTTERS AND DOWNSPOUTS

Gutters and downspouts shall be installed as indicated. Gutters shall be supported by continuous cleats and or by cleats spaced not less than 915 mm (36 inches). Downspouts shall be rigidly attached to the building. Supports for downspouts shall be spaced according to manufacturer's recommendations.

3.7 FLASHINGS

Flashings shall be installed at locations indicated and as specified below. Sealing shall be according to the flashing manufacturer's recommendations. Flashings shall be installed at intersections of roof with vertical surfaces and at projections through roof, except that flashing for heating and plumbing, including piping, roof, and floor drains, and for electrical conduit projections through roof or walls are specified in other sections. Except as otherwise indicated, counter flashings shall be provided over base flashings. Perforations in flashings made by masonry anchors shall be covered up by an application of bituminous plastic cement at the perforation. Flashing shall be installed on top of joint reinforcement. Flashing shall be formed to direct water to the outside of the system.

3.7.1 Base Flashing

Metal base flashing shall be coordinated with roofing work. Metal base flashing shall be set in plastic bituminous cement over the roofing membrane, nailed to nailing strip, and secured in place on the roof side with nails spaced not more than 75 mm (3 inches) on centers. Metal base flashing shall not be used on built-up roofing.

3.7.2 Counter Flashings

Except as otherwise indicated, counter flashings shall be provided over base flashings. Counter flashing shall be installed as shown [on the drawings] [in SMACNA-02]. Where bituminous base flashings are provided, the counter flashing shall extend down as close as practicable to the top of the cant strip. Counter flashing shall be factory formed to provide spring action against the base flashing.

3.7.3 Stepped Flashing

Stepped flashing shall be installed where sloping roofs surfaced with shingles abut vertical surfaces. Separate pieces of base flashing shall be placed in alternate shingle courses.

3.7.4 Through-Wall Flashing

Through-wall flashing includes sill, lintel, and spandrel flashing. The flashing shall be laid with a layer of mortar above and below the flashing so that the total thickness of the two layers of the mortar and flashing are the same thickness as the regular mortar joints. Flashing shall not extend further into the masonry backup wall than the first mortar joint. Joints in flashing shall be lapped and sealed. Flashing shall be one piece for lintels and sills.

3.7.4.1 Lintel Flashing

Lintel flashing shall extend the full length of lintel. Flashing shall extend through the wall one masonry course above the lintels and shall be bent down over the vertical leg of the outer steel lintel angle not less than 50 mm, (2 inches), or shall be applied over top of masonry and precast concrete lintels. Bedjoints of lintels at control joints shall be underlaid with sheet metal bond breaker.

3.7.4.2 Sill Flashing

Sill flashing shall extend the full width of the sill and not less than 100 mm (4 inches) beyond ends of sill except at control joint where the flashing shall be terminated at the end of the sill.

3.7.5 Valley Flashing

Valley flashing shall be installed as specified in SMACNA-02 and as indicated.

3.8 GRAVEL STOPS AND FASCIA

Gravel stops and fascia shall be fabricated and installed as indicated and in accordance with SMACNA-02.

3.9 INSTALLATION OF LOUVERS

Louvers shall be rigidly attached to the supporting construction. The installation shall be rain-tight. Louver screen shall be installed as indicated.

3.10 REGLETS

Reglets shall be a factory fabricated product of proven design, complete with fittings and special shapes as required. Open-type reglets shall be filled with fiberboard or other suitable separator to prevent crushing of the slot during installation. Reglet plugs shall be spaced not over 300 mm (12 inches) on centers and reglet grooves shall be filled with sealant. Friction or slot-type reglets shall have metal flashings inserted the full depth of slot and shall be lightly punched every 300 mm (12 inches) to crimp the reglet and counter flashing together. Polyvinyl chloride reglets shall be sealed with the manufacturer's recommended sealant.

3.11 CONTRACTOR QUALITY CONTROL

The Contractor shall establish and maintain a quality control procedure for sheet metal used in conjunction with roofing to assure compliance of the installed sheet metalwork with the contract requirements. Any work found not to be in compliance with the contract shall be promptly removed and replaced or corrected in an approved manner. Quality control shall include, but not be limited to, the following:

a. Observation of environmental conditions; number and skill level of sheet metal workers; condition of substrate.

b. Verification of compliance of materials before, during, and after installation.

c. Inspection of sheet metalwork for proper size and thickness, fastening and joining, and proper installation.

The actual quality control observations and inspections shall be documented and a copy of the documentation furnished to the Contracting Officer at the end of each day.

-- End of Section --

SECTION 07840

FIRESTOPPING

PART 1 GENERAL

1.1 REFERENCES

The publications listed below form a part of this specification to the extent referenced. The publications are referred to in the text by basic designation only.

AMERICAN SOCIETY FOR TESTING AND MATERIALS (ASTM)

ASTM E 84	(1996a) Surface Burning Characteristics of Building Materials
ASTM E 119	(1995a) Fire Tests of Building Construction and Materials
ASTM E 814	(1994b) Fire Tests of Through-Penetration Fire Stops

UNDERWRITERS LABORATORIES (UL)

UL 723	(1996) Test for Surface Burning Characteristics of Building Materials
UL 1479	(1994; Rev thru Jul 1997) Fire Tests of Through-Penetration Firestops
UL 2079	(1997) Tests for Fire Resistance of Building Joint Systems
UL Fire Resist Dir	(1997) Fire Resistance Directory

1.2 SUBMITTALS

Government approval is required for submittals with a "GA" designation; submittals having an "FIO" designation are for information only. The following shall be submitted in accordance with Section 01330 SUBMITTAL PROCEDURES:

SD-04 Drawings

Firestopping Materials; GA.

Detail drawings including manufacturer's descriptive data, typical details, installation instructions and the fire-test data and/or report as appropriate for the fire resistance rated construction and location. Submittal shall indicate the firestopping material to be provided for each type of application. When more than 5 penetrations or construction joints are to receive firestopping, drawings shall indicate location and type of application.

SD-13 Certificates

Firestopping Materials; GA.

Certificates attesting that firestopping material complies with the specified requirements. The label or listing of the Underwriters Laboratories will be acceptable evidence. In lieu of the label or listing, a written certificate may be submitted from an approved, nationally recognized testing agency equipped to perform such services, stating that the items have been tested and conform to the specified requirements and testing methods.

Installer Qualifications; GA.

Documentation of training and experience.

Inspection; GA.

Manufacturer's representative certification stating that firestopping work has been inspected and found to be applied according to the manufacturer's recommendations and the specified requirements.

1.3 GENERAL REQUIREMENTS

Firestopping shall consist of furnishing and installing a material or a combination of materials to form an effective barrier against the spread of flame, smoke and gases, and maintain the integrity of fire resistance rated walls, partitions, floors, and ceiling-floor assemblies, including through-penetrations and construction joints. Through-penetrations include the annular space around pipes, tubes, conduit, wires, cables and vents. Construction joints include those used to accommodate expansion, contraction, wind, or seismic movement; firestopping material shall not interfere with the required movement of the joint. Gaps requiring firestopping include gaps between the curtain wall and the floor slab and between the top of the fire-rated walls and the roof deck.

1.4 STORAGE AND DELIVERY

Materials shall be delivered in the original unopened packages or containers showing name of the manufacturer and the brand name. Materials shall be stored off the ground and shall be protected from damage and exposure to elements. Damaged or deteriorated materials shall be removed from the site.

1.5 INSTALLER QUALIFICATIONS

Installer of firestopping material shall be trained by the manufacturer or the manufacturer's representative, and shall have a minimum of 3 years experience in the installation of firestopping of the type specified.

PART 2 PRODUCTS

2.1 FIRESTOPPING MATERIALS

Firestopping materials shall consist of commercially manufactured products complying with the following minimum requirements:

2.1.1 Fire Hazard Classification

Material shall have a flame spread of 25 or less, and a smoke developed rating of 50 or less, when tested in accordance with ASTM E 84 or UL 723. Material shall be an approved firestopping material as listed in UL Fire Resist Dir or by a nationally recognized testing laboratory.

2.1.2 Toxicity

Material shall be nontoxic to humans at all stages of application.

2.1.3 Fire Resistance Rating

Firestopping will not be required to have a greater fire resistance rating than that of the assembly in which it is being placed.

2.1.3.1 Through-Penetrations

Firestopping materials for through-penetrations, as described in paragraph GENERAL REQUIREMENTS, shall provide "F" and "T" fire resistance ratings in accordance with ASTM E 814 or UL 1479, except that T Ratings are not required for penetrations smaller than or equal to a 100 mm (4 inch) nominal pipe or 0.01 square meter (16 square inches) in overall cross sectional area. Fire resistance ratings shall be the following:

a. Penetrations of Fire Resistance Rated Walls and Partitions: F Rating = 1 hour.

2.1.3.2 Construction Joints and Gaps

Fire resistance ratings of construction joints, as described in paragraph GENERAL REQUIREMENTS, and gaps such as those between roof decks and curtain walls shall be the same as the construction in which they occur. Construction joints and gaps shall be provided with firestopping materials and systems that have been tested per ASTM E 119 or UL 2079 to meet the required fire resistance rating.

PART 3 EXECUTION

3.1 PREPARATION

Areas to receive firestopping shall be free of dirt, grease, oil, or loose materials which may affect the fitting or fire resistance of the firestopping system.

3.2 INSTALLATION

Firestopping material shall completely fill void spaces regardless of geometric configuration, subject to tolerance established by the manufacturer. Firestopping for filling floor voids 100 mm (4 inches) or more in any direction shall be capable of supporting the same load as the floor is designed to support or shall be protected by a permanent barrier to prevent loading or traffic in the firestopped area. Firestopping shall be installed in accordance with manufacturer's written instructions. Firestopping shall be provided in the following locations, except in floor slabs on grade:

a. Penetrations of duct, conduit, tubing, cable and pipe through floors and through fire-resistance rated walls, partitions, and ceiling-floor assemblies.

b. Penetrations of vertical shafts such as pipe chases, elevator shafts, and utility chutes.

c. Gaps at the intersection of floor slabs and curtain walls, including inside of hollow curtain walls at the floor slab.

d. Gaps at perimeter of fire-resistance rated walls and partitions, such as between the top of the walls and the bottom of roof decks.

e. Construction joints in floors and fire rated walls and partitions.

f. Other locations where required to maintain fire resistance rating of the construction.

3.3 INSPECTION

Firestopped areas shall not be covered or enclosed until inspection is complete and approved. A manufacturer's representative shall inspect the applications initially to ensure adequate preparations (clean surfaces suitable for application, etc.) and periodically during the work to assure that the completed work has been accomplished according to the manufacturer's written instructions and the specified requirements.

-- End of Section --

SECTION 07900

JOINT SEALING

PART 1 GENERAL

1.1 REFERENCES

The publications listed below form a part of this specification to the extent referenced. The publications are referred to in the text by basic designation only.

AMERICAN SOCIETY FOR TESTING AND MATERIALS (ASTM)

ASTM C 734	(1993) Low-Temperature Flexibility of Latex Sealants After Artificial Weathering
ASTM C 834	(1995) Latex Sealants
ASTM C 920	(1995) Elastomeric Joint Sealants
ASTM C 1085	(1991) Butyl Rubber-Based Solvent-Release Sealants
ASTM C 1184	(1995) Structural Silicone-Sealants
ASTM D 217	(1994) Cone Penetration of Lubricating Grease (IP50/88)
ASTM D 1056	(1991) Flexible Cellular Materials - Sponge or Expanded Rubber
ASTM E 84	(1996a) Surface Burning Characteristics of Building Materials

1.2 SUBMITTALS

Government approval is required for submittals with a "GA" designation; submittals having an "FIO" designation are for information only. The following shall be submitted in accordance with Section 01330 SUBMITTAL PROCEDURES:

SD-01 Data

Backing; GA. Bond-Breaker; GA.

Sealant; GA.

Manufacturer's descriptive data including storage requirements, shelf life, curing time, instructions for mixing and application, and primer data (if required). A copy of the Material Safety Data Sheet shall be provided for each solvent, primer or sealant material.

SD-13 Certificates

Sealant; FIO.

Certificates of compliance stating that the materials conform to the specified requirements.

1.3 ENVIRONMENTAL REQUIREMENTS

The ambient temperature shall be within the limits of 4 to 32 degrees C when the sealants are applied.

1.4 DELIVERY AND STORAGE

Materials shall be delivered to the job in the manufacturer's original unopened containers. The container label or accompanying data sheet shall include the following information as applicable: manufacturer, name of material, formula or specification number, lot number, color, date of manufacture, mixing instructions, shelf life, and curing time at the standard conditions for laboratory tests. Materials shall be handled and stored to prevent inclusion of foreign materials. Materials shall be stored at temperatures between 4 and 32 degrees C unless otherwise specified by the manufacturer.

PART 2 PRODUCTS

2.1 BACKING

Backing shall be 25 to 33 percent oversize for closed cell and 40 to 50 percent oversize for open cell material, unless otherwise indicated.

2.1.1 NOT USED

2.1.2 NOT USED

2.1.3 NOT USED

2.1.4 Neoprene

Neoprene backing shall be ASTM D 1056, closed cell expanded neoprene cord Type 2, Class C, Grade 2C2.

2.2 BOND-BREAKER

Bond-breaker shall be as recommended by the sealant manufacturer to prevent adhesion of the sealant to backing or to bottom of the joint.

2.3 PRIMER

Primer shall be non-staining type as recommended by sealant manufacturer for the application.

2.4 NOT USED

2.5 SEALANT

2.5.1 LATEX

Latex Sealant shall be ASTM C 834.

2.5.2 ELASTOMERIC

Elastomeric sealants shall conform to ASTM C 920 and the following:

a. Polysulfide Sealant: Type S, Grade NS, Class 25, Use NT.

b. Polyurethane sealant: Grade NS, Class 25, Use M.

c. Silicone sealant: Type S, Grade NS, Class 25, Use NT.

d. Structural silicone sealant: ASTM C 1184, Type S, Use G.

2.5.3 ACOUSTICAL

Rubber or polymer-based acoustical sealant shall have a flame spread of 25 or less and a smoke developed rating of 50 or less when tested in accordance with ASTM E 84. Acoustical sealant shall have a consistency of 250 to 310 when tested in accordance with ASTM D 217, and shall remain flexible and adhesive after 500 hours of accelerated weathering as specified in ASTM C 734, and shall be non-staining.

2.5.4 BUTYL

Butyl sealant shall be ASTM C 1085.

2.5.5 PREFORMED

Preformed sealant shall be polybutylene or isoprene-butylene based pressure sensitive weather resistant tape or bead sealant capable of sealing out moisture, air and dust when installed as recommended by the manufacturer. At temperatures from minus 34 to plus 71 degrees C (30 to plus 160 degrees F), the sealant shall be non-bleeding and shall have no loss of adhesion.

2.5.5.1 Tape

Tape sealant: cross-section dimensions shall be as required for application.

2.5.5.2 NOT USED

2.5.5.3 Foam Strip

Foam strip shall be polyurethane foam. Foam strip shall be capable of sealing out moisture, air, and dust when installed and compressed as recommended by the manufacturer. Service temperature shall be minus 40 to plus 135 degrees C (minus 40 to plus 275 degrees F). Untreated strips shall be furnished with adhesive to hold them in place. Adhesive shall not stain or bleed into adjacent finishes. Treated strips shall be saturated with butylene waterproofing or impregnated with asphalt.

2.6 SOLVENTS AND CLEANING AGENTS

Solvents, cleaning agents, and accessory materials shall be provided as recommended by the manufacturer.

PART 3 EXECUTION

3.1 GENERAL

3.1.1 Surface Preparation

The surfaces of joints to receive sealant or caulk shall be free of all frost, condensation and moisture. Oil, grease, dirt, chalk, particles of mortar, dust, loose rust, loose mill scale, and other foreign substances shall be removed from surfaces of joints to be in contact with the sealant. Oil and grease shall be removed with solvent and surfaces shall be wiped dry with clean cloths. For surface types not listed below, the sealant manufacturer shall be contacted for specific recommendations.

3.1.2 Concrete and Masonry Surfaces

Where surfaces have been treated with curing compounds, oil, or other such materials, the materials shall be removed by sandblasting or wire brushing. Laitance, efflorescence and loose mortar shall be removed from the joint cavity.

3.1.3 Steel Surfaces

Steel surfaces to be in contact with sealant shall be sandblasted or, if sandblasting would not be practical or would damage adjacent finish work, the metal shall be scraped and wire brushed to remove loose mill scale. Protective coatings on steel surfaces shall be removed by sandblasting or by a solvent that leaves no residue.

3.1.4 Aluminum Surfaces

Aluminum surfaces to be in contact with sealants shall be cleaned of temporary protective coatings. When masking tape is used for a protective cover, the tape and any residual adhesive shall be removed just prior to applying the sealant. Solvents used to remove protective coating shall be as recommended by the manufacturer of the aluminum work and shall be non-staining.

3.1.5 Wood Surfaces

Wood surfaces to be in contact with sealants shall be free of splinters and sawdust or other loose particles.

3.2 APPLICATION

3.2.1 Masking Tape

Masking tape shall be placed on the finish surface on one or both sides of a joint cavity to protect adjacent finish surfaces from primer or sealant smears. Masking tape shall be removed within 10 minutes after joint has been filled and tooled.

3.2.2 Backing

Backing shall be installed to provide the indicated sealant depth. The installation tool shall be shaped to avoid puncturing the backing.

3.2.3 Bond-Breaker

Bond-breaker shall be applied to fully cover the bottom of the joint without contaminating the sides where sealant adhesion is required.

3.2.4 Primer

Primer shall be used on concrete masonry units, wood, or other porous

surfaces in accordance with instructions furnished with the sealant. Primer shall be applied to the joint surfaces to be sealed. Surfaces adjacent to joints shall not be primed.

3.2.5 Sealant

Sealant shall be used before expiration of shelf life. Multi-component sealants shall be mixed according to manufacturer's printed instructions. Sealant in guns shall be applied with a nozzle of proper size to fit the width of joint. Joints shall be sealed as detailed in the drawings. Sealant shall be forced into joints with sufficient pressure to expel air and fill the groove solidly. Sealant shall be installed to the indicated depth without displacing the backing. Unless otherwise indicated, specified, or recommended by the manufacturer, the installed sealant shall be dry tooled to produce a uniformly smooth surface free of wrinkles and to ensure full adhesion to the sides of the joint; the use of solvents, soapy water, etc., will not be allowed. Sealants shall be installed free of air pockets, foreign embedded matter, ridges and sags. Sealer shall be applied over the sealant when and as specified by the sealant manufacturer.

3.3 CLEANING

The surfaces adjoining the sealed joints shall be cleaned of smears and other soiling resulting from the sealant application as work progresses.

-- End of Section --

SECTION 08110

STEEL DOORS AND FRAMES

PART 1 GENERAL

1.1 REFERENCES

The publications listed below form a part of this specification to the extent referenced. The publications are referred to in the text by basic designation only.

AMERICAN SOCIETY FOR TESTING AND MATERIALS (ASTM)

ASTM C 236	(1989; R 1993) Steady-State Thermal Performance of Building Assemblies by Means of a Guarded Hot Box
ASTM C 976	(1990) Thermal Performance of Building Assemblies by Means of a Calibrated Hot Box
ASTM D 2863	(1991) Measuring the Minimum Oxygen Concentration to Support Candle-Like Combustion of Plastics (Oxygen Index)
ASTM E 283	(1991) Determining the Rate of Air Leakage Through Exterior Windows, Curtain Walls, and Doors Under Specified Pressure Differences Across the Specimen

DOOR AND HARDWARE INSTITUTE (DHI)

DHI A115.1G	(1994) Installation Guide for Doors and Hardware

NATIONAL FIRE PROTECTION ASSOCIATION (NFPA)

NFPA 80	(1995) Fire Doors and Windows
NFPA 80A	(1993) Protection of Buildings from Exterior Fire Exposures
NFPA 101	(1997) Safety to Life from Fire in Buildings and Structures
NFPA 252	(1995) Fire Tests of Door Assemblies

STEEL DOOR INSTITUTE (SDOI)

SDOI SDI-100	(1991) Standard Steel Doors and Frames
SDOI SDI-106	(1996) Standard Door Type Nomenclature
SDOI SDI-107	(1984) Hardware on Steel Doors

(Reinforcement - Application)

1.2 SUBMITTALS

Government approval is required for submittals with a "GA" designation; submittals having an "FIO" designation are for information only. The following shall be submitted in accordance with Section 01330 SUBMITTAL PROCEDURES:

SD-04 Drawings

Steel Doors and Frames; GA.

Drawings using standard door type nomenclature in accordance with SDOI SDI-106 indicating the location of each door and frame, elevation of each model of door and frame, details of construction, method of assembling sections, location and extent of hardware reinforcement, hardware locations, type and location of anchors for frames, and thicknesses of metal. Drawings shall include catalog cuts or descriptive data for the doors, frames, and weatherstripping including air infiltration data and manufacturers printed instructions.

SD-09 Reports

Fire Rated Doors; FIO.

A letter by a nationally recognized testing laboratory which identifies the product manufacturer, type, and model; certifying that the laboratory has tested a sample assembly in accordance with NFPA 252 and issued a current listing for same.

SD-13 Certificates

Fire Rated Doors; GA. Thermal Insulated Doors; GA.

a. Certification of Oversized Fire Doors: Certificates of compliance in accordance with the requirements of NFPA 252 for fire doors exceeding the sizes for which label service is available.

b. Certification of Thermal Insulating Rating: Certification or test report for thermal insulated doors shall show compliance with the specified requirements. The certification, or test report, shall list the parameters and the type of hardware and perimeter seals used to achieve the rating.

Manufacturer's standard color samples of factory applied finishes.

1.3 DELIVERY AND STORAGE

During shipment, welded unit type frames shall be strapped together in pairs with heads at opposite ends or shall be provided with temporary steel spreaders at the bottom of each frame; and knockdown type frames shall be securely strapped in bundles. Materials shall be delivered to the site in undamaged condition, and stored out of contact with the ground and under a weathertight covering permitting air circulation. Doors and assembled frames shall be stored in an upright position in accordance with DHI A115.1G. Abraded, scarred, or rusty areas shall be cleaned and touched up with matching finishes.

1.4 WARRANTY

Manufacturer's standard performance guarantees or warranties that extend beyond a 1 year period shall be provided.

PART 2 PRODUCTS

2.1 DOORS AND FRAMES

Doors and frames shall be factory fabricated in accordance with SDOI SDI-100 and the additional requirements specified herein. Door grade shall be heavy duty (Grade II) unless otherwise indicated on the door and door frame schedules. Exterior doors and frames shall be designation G60 galvanized. Doors and frames shall be prepared to receive hardware conforming to the templates and information provided under Section 08700 BUILDERS' HARDWARE. Doors and frames shall be reinforced, drilled, and tapped to receive mortised hinges, locks, latches, and flush bolts as required. Doors and frames shall be reinforced for surface applied hardware. Frames shall be welded type. Door frames shall be furnished with a minimum of three jamb anchors and one floor anchor per jamb. Anchors shall be not less than 1.2 mm (18 gauge) steel or 4.5 mm (7 gauge) diameter wire. For wall conditions that do not allow the use of a floor anchor, an additional jamb anchor shall be provided. Rubber silencers shall be furnished for installation into factory predrilled holes in door frames; adhesively applied silencers are not acceptable. Where frames are installed in plaster or masonry walls, plaster guards shall be provided on door frames at hinges and strikes. Full glass doors shall conform to SDOI SDI-100, Model 3, and shall include provisions for glazing. Reinforcing of door assemblies for closers and other required hardware shall be in accordance with SDOI SDI-100and the conditions of the fire door assembly listing when applicable. Exterior doors shall have top edges closed flush and sealed against water penetration.

2.2 FIRE RATED DOORS

Fire rated door assemblies shall bear the listing identification label of a nationally recognized testing laboratory qualified to perform tests of fire door assemblies in accordance with NFPA 252 and having a listing for the tested assemblies. The fire resistance rating shall be 1/3 hr rated. Doors exceeding the sizes for which listing label service is offered shall be in accordance with NFPA 252. Listing identification labels shall be constructed and permanently applied by a method which results in their destruction should they be removed.

2.3 THERMAL INSULATED DOORS

The interior of thermal insulated doors shall be completely filled with rigid plastic foam permanently bonded to each face panel. The thermal conductance (U-value) through the door shall not exceed 2.33 W/sq m times K (0.41 btu/hr times sq f times f) when tested as an operational assembly in accordance with ASTM C 236 or ASTM C 976. Doors with cellular plastic cores shall have a minimum oxygen index rating of 22 percent when tested in accordance with ASTM D 2863.

2.4 NOT USED

2.5 NOT USED

2.6 WEATHERSTRIPPING

Unless otherwise specified in Section 08700 BUILDERS' HARDWARE, weatherstripping shall be as follows: Weatherstripping for head and jamb shall be manufacturer's standard elastomeric type of synthetic rubber, vinyl, or neoprene and shall be installed at the factory or on the jobsite in accordance with the door frame manufacturer's recommendations. Weatherstripping for bottom of doors shall be as shown. Air leakage rate of weatherstripping shall not exceed 0.31 l/s per linear meter (0.20 cfm per linear foot) of crack when tested in accordance with ASTM E 283 at standard test conditions.

2.7 NOT USED

2.8 LOUVERS

Where indicated, doors shall be provided with full louvers or louver sections. Louvers shall be sightproof type inserted into the door. Pierced louvers shall not be used on exterior doors. Inserted louvers shall be stationary. Louvers shall be nonremovable from the outside of exterior doors or the unsecure side of interior doors. Insect screens shall be a removable type with 18 by 16 mesh aluminum or bronze cloth. Full louver doors shall be in accordance with SDOI SDI-100, Grade III, Model 3.

2.9 GLAZING

Glazing shall be as specified in Section 08810 GLASS AND GLAZING. Removable glazing beads shall be screw-on or snap-on type.

2.10 FACTORY FINISH

Doors and frames shall be phosphatized and primed with standard factory primer system.

PART 3 EXECUTION

3.1 INSTALLATION

Installation shall be in accordance with DHI A115.1G. Preparation for surface applied hardware shall be in accordance with SDOI SDI-107. Rubber silencers shall be installed in door frames after finish painting has been completed; adhesively applied silencers are not acceptable. Weatherstripping shall be installed at exterior door openings to provide a weathertight installation. Installation and operational characteristics of fire doors shall be in accordance with NFPA 80, NFPA 80A and NFPA 101. Hollow metal door frames shall be solid grouted masonry walls.

3.1.1 Thermal Insulated Doors

Hardware and perimeter seals shall be adjusted for proper operation. Doors shall be sealed weathertight after installation of hardware and shall be in accordance with Section 07900 JOINT SEALING.

3.2 FIELD PAINTED FINISH

Steel doors and frames shall be field painted in accordance with Section 09900 PAINTING, GENERAL. Weatherstrips shall be protected from paint. Finish shall be free of scratches or other blemishes.

-- End of Section --

SECTION 08120

ALUMINUM DOORS AND FRAMES

PART 1 GENERAL

1.1 REFERENCES

The publications listed below form a part of this specification to the extent referenced. The publications are referred to in the text by basic designation only.

ALUMINUM ASSOCIATION (AA)

AA DAF-45	(1980; R 1993) Designation System for Aluminum Finishes

AMERICAN SOCIETY FOR TESTING AND MATERIALS (ASTM)

ASTM B 209M	(1995) Aluminum and Aluminum-Alloy Sheet and Plate (Metric)
ASTM B 221M	(1996) Aluminum and Aluminum-Alloy Extruded Bars, Rods, Wire, Profiles, and Tubes (Metric)
ASTM E 283	(1991) Determining the Rate of Air Leakage Through Exterior Windows, Curtain Walls, and Doors Under Specified Pressure Differences Across the Specimen
ASTM E 330	(1990) Structural Performance of Exterior Windows, Curtain Walls, and Doors by Uniform Static Air Pressure Difference
ASTM E 331	(1996) Water Penetration of Exterior Windows, Curtain Walls, and Doors by Uniform Static Air Pressure Difference

1.2 SYSTEM DESCRIPTION

Frames and swing-type aluminum doors, of size and design shown on the drawings, shall be provided at the locations indicated. Frames shall be furnished complete with doors, subframes, adjoining sidelights, adjoining window wall system, trim, and other accessories indicated and specified.

1.3 PERFORMANCE REQUIREMENTS

1.3.1 Wind Load Performance

Doors and frames shall be of sufficient strength to withstand a design wind load of 1440 Pa (30 pounds per square foot) of supported area with a deflection of not more than 1/175 times the length of the member. Doors shall be tested in accordance with ASTM E 330 at a pressure not less than 1.5 times the design load.

1.3.2 Water Penetration Performance

Frames and fixed areas, and non-handicap complying doors shall have no water penetration when tested in accordance with ASTM E 331 at a pressure of 383 Pa.

1.4 SUBMITTALS

Government approval is required for submittals with a "GA" designation; submittals having an "FIO" designation are for information only. The following shall be submitted in accordance with Section 01330 SUBMITTAL PROCEDURES:

SD-01 Data

Aluminum Doors and Frames; GA.

Manufacturer's descriptive data and catalog cuts including air-infiltration data.

SD-04 Drawings

Aluminum Doors and Frames; GA.

A schedule showing the location of each door and window wall system shall be included with the drawings. Drawings showing elevations of each door and frame type, details and method of anchorage, details of construction, location and installation of hardware, shape and thickness of materials, and details of joints and connections.

SD-06 Instructions

Installation; FIO. Cleaning; FIO.

Manufacturer's installation instructions and cleaning instructions.

SD-09 Reports

Aluminum Doors; GA.

For full-glazed and flush doors, certified test reports from an independent testing laboratory, stating that doors are identical in design, materials, and construction to a door that has been tested and meets all test and specified requirements.

SD-14 Samples

Finishes; _____.

Samples of the color anodized coating, showing the extreme color range.

1.5 DELIVERY AND STORAGE

Materials delivered to the jobsite shall be inspected for damage, and shall be unloaded with a minimum of handling. Storage shall be in a dry location with adequate ventilation, free from dust, water, and other contaminants, and which permits easy access for inspecting and handling. Materials shall be neatly stored on the floor, properly stacked on nonabsorptive strips or wood platforms. Doors and frames shall not be covered with tarps,

polyethylene film, or similar coverings.

1.6 WARRANTY

Manufacturer's standard performance guarantees or warranties that extend beyond a one-year period shall be provided.

PART 2 PRODUCTS

2.1 ALUMINUM DOORS AND FRAMES

Extrusions shall comply with ASTM B 221M , Alloy 6063-T5 or -T6, except alloy used for anodized color coatings shall be required to produce the specified color. Aluminum sheets and strips shall comply with ASTM B 209M , alloy and temper best suited for the purpose. Fasteners shall be hard aluminum or stainless steel.

2.1.1 Finishes

Finish shall be color anodized. Color anodized finish shall be AA-M10C22A34 in accordance with the requirements of AA DAF-45.

2.1.2 Welding and Fastening

Where possible, welds shall be located on unexposed surfaces. Welds required on exposed surfaces shall be smoothly dressed. Welding shall produce a uniform texture and color in the finished work, free of flux and spatter. Exposed screws or bolts will be permitted only at inconspicuous locations and shall have heads countersunk.

2.1.3 Anchors

Anchors shall be stainless steel or steel with a hot-dipped galvanized finish. Anchors of the sizes and shapes required shall be provided for securing aluminum frames to adjacent construction. Anchors shall be placed near top and bottom of each jamb and at intermediate points not more than 625 mm (25 inches) apart. Vertical mullion reinforcement shall be of sufficient length to extend up to the overhead structural slab or framing and be securely attached thereto. The bottom of each frame shall be anchored to the rough floor construction with 2.4 mm (3/32 inch) thick stainless steel angle clips secured to the back of each jamb and to floor construction. Stainless steel bolts and expansion rivets shall be used for fastening clip anchors. Door frames free of window wall system shall be reinforced and securely anchored to floor construction.

2.1.4 Hardware

Hardware for aluminum doors is specified in Section 08700 BUILDERS' HARDWARE. Doors and frames shall be cut, reinforced, drilled, and tapped at the factory to receive template hardware. Reinforcement shall be provided in the core of doors as required to receive locks, door closers, and other hardware. Doors to receive surface applied hardware shall be reinforced as required.

2.1.5 Glazing

Glazing shall be as specified in Section 08810 GLASS AND GLAZING. Metal glazing beads, vinyl inserts, and glazing gaskets shall be provided for securing glass. Glass stops shall be tamperproof on exterior side.

2.1.6 Weatherstripping

Weatherstripping shall be continuous silicone-treated wool pile type, or a type recommended by the door manufacturer and shall be provided on head and jamb of exterior door frames. Weatherstripping for bottom of doors shall be as shown. Weatherstripping shall be easily replaced without special tools, and shall be adjustable at meeting stiles of pairs of doors. Air leakage rate of weatherstripping shall not exceed 0.775 L/s per lineal meter (0.5 cfm per lineal foot) of crack when tested in accordance with ASTM E 283 at standard test conditions.

2.2 ALUMINUM FRAMES

Frames shall be double-glazed window wall system and shall have a minimum total average unit thermal resistance of 0.34 square meter degree K per W (R value 1.92). Frames shall be fabricated of extruded aluminum shapes to contours as shown on the drawings. Shapes shown are representations of design, function, and required profile. Dimensions shown are minimum. Shapes of equivalent design may be submitted, subject to approval of samples. Minimum metal wall thickness shall be 2.29 mm (0.090 inch), except glazing beads, moldings, and trim shall be not less than 1.27 mm (0.050 inch). Frames that are to receive glass shall have removable snap-on glass stops and glazing beads. Joints in frame members shall be milled to a hairline tight fit so that raw edges of the assembly are not visible, sealed internally to prevent water infiltration, reinforced, and secured mechanically by appropriate screws or by screw spline attachment.

2.3 ALUMINUM DOORS

Doors shall be not less than 44.4 mm (1-3/4 inches) thick. Clearances at hinge stiles, lock stiles and top rails, floors and thresholds, shall comply with manufacturer's standard. Single-acting doors shall be beveled 3 mm (1/8 inch) at lock and meeting stile edges. Double-acting doors shall have rounded edges at hinge stile, lock stile, and meeting stile edges.

2.3.1 Full-Glazed Stile and Rail Doors

Doors shall have medium stiles and rails as shown, and shall be fabricated from extruded aluminum hollow seamless tubes or from a combination of open-shaped members interlocked or welded together. Doors shall be single-glazed. Top and bottom rail shall be fastened together by means of welding or by 10 mm (3/8 inch) diameter plated tensioned steel tie rods. An adjustable mechanism shall be provided in the top rail of narrow stile doors to allow for minor clearance adjustments after installation. Extruded aluminum snap-in glazing beads shall be provided on interior side of doors. Extruded aluminum theft-proof snap-in glazing beads or fixed glazing beads shall be provided on exterior or security side of doors. Glazing beads shall have vinyl insert glazing gaskets, designed to receive glass of thickness required. Glass is specified in Section 08810 GLASS AND GLAZING.

PART 3 EXECUTION

3.1 INSTALLATION OF DOORS, FRAMES, AND ACCESSORIES

2.4 Protection of Aluminum

Aluminum shall not be used where it will be in contact with copper or where

it will contact water which flows over copper surfaces. Aluminum that will be in contact with wet or pressure-treated wood, mortar, concrete, masonry, or ferrous metals shall be protected against galvanic or corrosive action by one of the following methods.

2.4.1 Paint

Aluminum surfaces to be protected shall be solvent cleaned and given a coat of zinc-molybdate primer and one coat of aluminum paint.

2.4.2 Nonabsorptive Tape or Gasket

Nonabsorptive tape or gasket shall be placed between the adjoining surfaces and shall be cemented to the aluminum surface using a cement compatible with aluminum.

2.5 Installation

Frames and framing members shall be accurately set in position to receive adjoining components. Frames shall be plumb, square, level, and in alignment, and securely anchored to adjacent construction. Metal-to-metal joints between framing members and joints between framing members and building surfaces shall be sealed as specified in Section 07900 JOINT SEALING. Doors shall be accurately hung with proper clearances, and adjusted to operate properly.

SECTION 08330

OVERHEAD ROLLING DOORS

PART 1 GENERAL

1.1 REFERENCES

The publications listed below form a part of this specification to the extent referenced. The publications are referred to in the text by basic designation only.

AMERICAN SOCIETY FOR TESTING AND MATERIALS (ASTM)

ASTM A 653/A 653M	(1996) Steel Sheet, Zinc-Coated (Galvanized) or Zinc-Iron Alloy-Coated (Galvannealed) by the Hot-Dip process
ASTM E 84	(1996a) Surface Burning Characteristics of Building Materials

AMERICAN SOCIETY OF HEATING, REFRIGERATING, AND AIR-CONDITIONING ENGINEERS (ASHRAE)

ASHRAE Fundament HDBK-IP	(1997) Handbook, Fundamentals I-P Edition
ASHRAE Fundament HDBK-SI	(1997) Handbook, Fundamentals SI Edition

NATIONAL ELECTRICAL MANUFACTURERS ASSOCIATION (NEMA)

NEMA ICS 2	(1993) Industrial Control and Systems Controllers, Contactors, and Overload Relays Rated Not More Than 2,000 Volts AC or 750 Volts DC
NEMA ICS 6	(1993) Industrial Control and Systems Enclosures
NEMA MG 1	(1993; Rev 1, Rev 2, Rev 3) Motors and Generators

NATIONAL FIRE PROTECTION ASSOCIATION (NFPA)

NFPA 70	(1996; Errata 96-4) National Electrical Code
NFPA 80	(1995) Fire Doors and Fire Windows

1.2 DESCRIPTION

Overhead rolling doors shall be spring counterbalanced, rolling type, with interlocking slats, complete with guides, fastenings, hood, brackets, and operating mechanisms, and shall be designed for use on openings as indicated. Each door shall be provided with a permanent label showing the manufacturer's name and address and the model/serial number of the door.

Doors in excess of the labelled size shall be deemed oversize and shall be provided with a listing agency oversize label, or a listing agency oversize certificate, or a certificate signed by an official of the manufacturing company certifying that the door and operator have been designed to meet the specified requirements.

1.2.1 Wind Load Requirements

Doors and components shall be designed to withstand the minimum design wind load of 960 pa Doors shall be constructed to sustain a superimposed load, both inward and outward, equal to 1-1/2 times the minimum design wind load. The door shall support the superimposed loads for a minimum period of 10 seconds without evidence of serious damage and shall be operable after conclusion of the tests. Calculations shall be provided that prove the door design meets the design windload requirements. Test data showing compliance with design windload requirements for the door design tested in accordance with a uniform static load equal to 1-1/2 times the minimum design windload, shall be provided. The uniform static load test specimen shall be supported using guides, endlocks, and windlocks as required for project installation. Recovery shall be at least 3/4 of the maximum deflection within 24 hours after the test load is removed.

1.2.2 Operational Cycle Life

All portions of the door and door operating mechanism that are subject to movement, wear, or stress fatigue shall be designed to operate through a minimum number of 10 cycles per day. One complete cycle of door operation is defined as when the door is in the closed position, moves to the full open position, and returns to the closed position.

1.3 SUBMITTALS

Government approval is required for submittals with a "GA" designation; submittals having an "FIO" designation are for information only. The following shall be submitted in accordance with Section 01330 SUBMITTAL PROCEDURES:

SD-01 Data

Overhead Rolling Door Unit; GA.

Manufacturer's catalog data, test data, and summary of forces and loads on the walls/jambs.

SD-04 Drawings

Overhead Rolling Door Unit; GA.

Drawings showing the location of each door including schedules. Drawings shall include elevations of each door type, details and method of anchorage, details of construction, location and installation of hardware, shape and thickness of materials, details of joints and connections, and details of guides, power operators, controls, and other fittings.

SD-06 Instructions

Overhead Rolling Door Unit; FIO.

Manufacturer's preprinted installation instructions.

SD-14 Samples

Overhead Rolling Door Unit; GA.

Manufacturer's standard color samples of factory applied finishes.

SD-19 Operation and Maintenance Manuals

Operation Manual; GA.

Maintenance and Repair Manual ; GA.

Six copies of the system operation manual and system maintenance and repair manual for each type of door and control system.

1.4 DELIVERY AND STORAGE

Doors shall be delivered to the jobsite wrapped in a protective covering with the brands and names clearly marked thereon. Doors shall be stored in a dry location that is adequately ventilated and free from dirt and dust, water, and other contaminants, and in a manner that permits easy access for inspection and handling.

1.5 WARRANTY

Manufacturer's standard performance guarantees or warranties that extend beyond a 1-year period shall be provided.

1.6 OPERATION AND MAINTENANCE MANUALS

Operating instructions outlining the step-by-step procedures required for motorized door and shutter operation for the overhead rolling door unit shall be provided. The instructions shall include the manufacturer's name, model number, service manual, parts list, and brief description of all equipment and their basic operating features. Maintenance instructions listing routine maintenance procedures, possible breakdowns and repairs, troubleshooting guides, and simplified diagrams for the equipment as installed shall be provided. A complete list of parts and supplies, source of supply, and a list of the high mortality maintenance parts shall be provided.

PART 2 PRODUCTS

2.1 OVERHEAD ROLLING DOORS

Doors shall be surface-mounted type with guides at jambs set back a sufficient distance to clear the opening. Exterior doors shall be mounted on interior side of walls.

2.1.1 Curtains

The curtains shall roll up on a barrel supported at the head of opening on brackets, and shall be balanced by helical torsion springs. Steel slats for doors from 4.5 m to 6.3 m (15 feet wide to 21 feet) wide shall be minimum bare metal thickness of 1.0 mm (0.0329 inches). Slats shall be of the minimum bare metal decimal thickness required for the width indicated and the wind pressure specified above. Slats for fire doors over 3.6 m (12 feet) wide and under 6 m (20 feet) wide shall be not less than 1.0 mm

(0.0329 inches) steel.

2.1.1.1 NOT USED

2.1.1.2 Insulated Curtains

The slat system shall supply a minimum R-value of 4 when calculated in accordance with ASHRAE Fundament HDBK-IP ASHRAE Fundament HDBK-SI. Slats shall be of the flat type as standard with the manufacturer. Slats shall consist of a urethane or polystyrene core not less than 17 mm (11/16 inch) thick, completely enclosed within metal facings. Exterior face of slats shall be gauge as specified for curtains. Interior face shall be not lighter than 0.70 mm (0.0209 inches). The insulated slat assembly shall have a flame spread rating of not more than 25 and a smoke development factor of not more than 50 when tested in accordance with ASTM E 84.

2.1.2 Endlocks and Windlocks

The ends of each alternate slat for interior doors shall have steel endlocks of manufacturer's stock design. In addition to endlocks, non-rated exterior doors shall have the manufacturer's standard windlocks as required to withstand the wind load. Windlocks shall prevent the curtain from leaving guides because of deflection from specified wind pressure.

2.1.3 Bottom Bar

The curtain shall have a standard bottom bar consisting of two hot-dip galvanized steel angles for steel doors. A sensing edge shall be attached to the bottom bar of doors that are electric-power operated.

2.1.4 Guides

Guides shall be steel structural shapes or formed steel shapes, of a size and depth to provide proper clearance for operation and resistance under the design windload. Guides shall be attached to adjoining construction with fasteners recommended by the manufacturer. Spacing of fasteners shall be as required to meet the minimum design windload. Doors and guides in hazardous areas shall have static grounding.

2.1.5 Barrel

The barrel shall be steel pipe or commercial welded steel tubing of proper diameter for the size of curtain. Deflection shall not exceed 2.5 mm per meter of span. Ends of the barrel shall be closed with metal plugs, machined to fit the pipe. Aluminum plugs are acceptable on non-fire door barrels.

2.1.6 Springs

Oil tempered helical steel counter-balance torsion springs shall be installed within the barrel and shall be capable of producing sufficient torque to assure easy operation of the door curtain. Access shall be provided for spring tension adjustment from outside of the bracket without removing the hood.

2.1.7 Brackets

Brackets shall be of steel plates to close the ends of the roller-shaft

housing, and to provide mounting surfaces for the hood. An operation bracket hub and shaft plugs shall have sealed prelubricated ball bearings.

2.1.8 Hoods

Hoods shall be steel with minimum bare metal thickness of 0.70 mm (0.0209 inches) formed to fit contour of the end brackets, and shall be reinforced with steel rods, rolled beads, or flanges at top and bottom edges. Multiple segment and single piece hoods shall be provided with support brackets of the manufacturer's standard design as required for adequate support.

2.1.9 Weatherstripping

Exterior doors shall be fully weatherstripped. A compressible and replaceable weather seal shall be attached to the bottom bar. Weather seal at door guides shall be continuous vinyl or neoprene, bulb or leaf type, or shall be nylon-brush type. A weather baffle shall be provided at the lintel or inside the hood. Weatherstripping shall be easily replaced without special tools.

2.1.10 NOT USED

2.1.11 Operation

Doors shall be operated by means of electric power with auxiliary chain hoist. Equipment shall be designed and manufactured for usage in non-hazardous areas.

2.1.11.1 NOT USED

2.1.11.2 NOT USED

2.1.11.3 NOT USED

2.1.11.4 Electric Power Operator With Auxiliary Chain Hoist Operation

Electric power operators shall be heavy-duty industrial type. The unit shall operate the door through the operational cycle life specified. The electric power operator shall be complete with electric motor, auxiliary operation, brake, mounting brackets, push button controls, limit switches, magnetic reversing starter, and all other accessories necessary to operate components specified in other paragraphs of this section. The operator shall be so designed that the motor may be removed without disturbing the limit-switches settings and without affecting the emergency chain operator. Doors shall be provided with an auxiliary operator for immediate emergency manual operation of the door in case of electrical failure. Auxiliary operation shall be by means of galvanized endless chain extending to within 900 mm (3 feet) of the floor. The emergency manual operating mechanism shall be so arranged that it may be operated from the floor without affecting the settings of the limit switches. A mechanical device shall be included that will disconnect the motor from the drive operating mechanism when the auxiliary operator is used. Where control voltages differ from motor voltage, a control voltage transformer shall be provided in and as part of the electric power operator system. Control voltage shall not exceed 120 volts.

a. Motors: Drive motors shall conform to NEMA MG 1, shall be high-starting torque, reversible type, and shall be of sufficient wattage

and torque output to move the door in either direction from any position at a speed range of 0.23 m per second (6 to 8 inches per second) without exceeding the rated capacity. Motors shall be suitable for operation on 230 volts, 60 hertz, 3-phase current and shall be suitable for across-the-line starting. Motors shall be designed to operate at full capacity over a supply voltage variation of plus or minus 10 percent of the motor voltage rating. Motors shall be provided with overload protection.

b. Controls: Control equipment shall conform to NEMA ICS 2. Enclosures shall conform to NEMA ICS 6, Type 12 (industrial use), Type 7 or 9 in hazardous locations, in accordance with NFPA 70. Exterior control stations shall be weatherproof key-operated type with corrosion-resistant cast-metal cover. Each control station shall be of the three position button or switch type, marked "OPEN," "CLOSE," and "STOP." The "OPEN" and "STOP" controls shall be of the momentary contact type with seal-in contact. The "CLOSE" control shall be of the momentary contact type. When the door is in motion and the "STOP" control is pressed, the door shall stop instantly and remain in the stop position; from the stop position, the door shall be operable in either direction by the "OPEN" or "CLOSE" controls. Controls shall be of the full-guarded type to prevent accidental operation. Readily adjustable limit switches shall be provided to automatically stop the doors at their fully open and closed positions.

c. Sensing Edge Device: The bottom edge of electric power operated doors shall have an electric sensing edge for non-hazardous areas that will reverse the door movement upon contact with an obstruction and cause the door to return to its full open position. The sensing edge shall not substitute for a limit switch. Exterior doors shall be provided with a combination compressible weather seal and sensing edge.

d. Electrical Work: Conduit and wiring necessary for proper operation shall be provided under Section 16415 ELECTRICAL WORK, INTERIOR. Flexible connections between doors and fixed supports shall be made with flexible type SJO cable, except in hazardous locations where wiring shall conform to NFPA 70, as appropriate. The cable shall have a spring-loaded automatic take up reel or a coil cord equivalent device.

2.1.12 NOT USED

2.1.13 Locking

Locking for motor operated doors shall consist of self-locking gearing with chain lock for emergency hand chain.

2.1.14 Finish

Steel slats and hoods shall be hot-dip galvanized G60 in accordance with ASTM A 653/A 653M, and shall be treated for paint adhesion and shall receive a factory baked-on finish coat. The paint system shall withstand a minimum of 1500 hours without blistering, bubbling, or rust. Surfaces other than slats, hood, and faying surfaces shall be cleaned and treated to assure maximum paint adherence and shall be given a factory dip or spray coat of rust inhibitive metallic oxide or synthetic resin primer.

PART 3 EXECUTION

3.1 INSTALLATION

Doors shall be installed in accordance with approved detail drawings and

manufacturer's instructions. Anchors and inserts for guides, brackets, motors, switches, hardware, and other accessories shall be accurately located. Upon completion, doors shall be free from warp, twist, or distortion. Doors shall be lubricated, properly adjusted, and demonstrated to operate freely. Fire doors shall be installed in conformance with the requirements of NFPA 80 and the manufacturer's instructions.

3.2 FIELD PAINTED FINISH

Steel doors and frames shall be field painted in accordance with Section 09900 PAINTING, GENERAL. Weatherstrips shall be protected from paint. Finish shall be free of scratches or other blemishes.

-- End of Section --

SECTION 08520

ALUMINUM WINDOWS

PART 1 GENERAL

1.1 REFERENCES

The publications listed below form a part of this specification to the extent referenced. The publications are referred to in the text by basic designation only.

ALUMINUM ASSOCIATION (AA)

AA DAF-45	(1980; R 1993) Designation System for Aluminum Finishes

AMERICAN ARCHITECTURAL MANUFACTURERS ASSOCIATION (AAMA)

AAMA AAMA/NWWDA 101 I.S.2	(1997) Voluntary Specifications for Aluminum, Vinyl (PVC) and Wood Windows and Glass Doors
AAMA 1503.1	(1988) Voluntary Test Method for Thermal Transmittance and Condensation Resistance of Windows, Doors and Glazed Wall Sections

AMERICAN SOCIETY FOR TESTING AND MATERIALS (ASTM)

ASTM E 283	(1991) Determining the Rate of Air Leakage Through Exterior Windows, Curtain Walls, and Doors Under Specified Pressure Differences Across the Specimen
ASTM E 330	(1990) Structural Performance of Exterior Windows, Curtain Walls, and Doors by Uniform Static Air Pressure Difference
ASTM E 547	(1996) Water Penetration of Exterior Windows, Curtain Walls, and Doors by Cyclic Static Air Pressure Differential

INSECT SCREENING WEAVERS ASSOCIATION (ISWA)

ISWA IWS 089	(1990) Recommended Standards and Specifications for Insect Wire Screening (Wire Fabric)

NATIONAL FIRE PROTECTION ASSOCIATION (NFPA)

NFPA 101	(1997; Errata 97-1) Life Safety Code

SCREEN MANUFACTURERS ASSOCIATION (SMA)

SMA ANSI/SMA 1004	(1987) Aluminum Tubular Frame Screens for Windows

1.2 WINDOW PERFORMANCE

Aluminum windows shall be designed to meet the following performance requirements. Testing requirements shall be performed by an independent testing laboratory or agency.

1.2.1 Structural Performance

Structural test pressures on window units shall be for positive load (inward) and negative load (outward) in accordance with ASTM E 330. After testing, there shall be no glass breakage, permanent damage to fasteners, hardware parts, support arms or actuating mechanisms or any other damage which could cause window to be inoperable. There shall be no permanent deformation of any main frame, sash or ventilator member in excess of the requirements established by AAMA AAMA/NWWDA 101 I.S.2 for the window types and classification specified in this section.

1.2.2 Air Infiltration

Air infiltration shall not exceed the amount established by AAMA AAMA/NWWDA 101 I.S.2 for each window type when tested in accordance with ASTM E 283.

1.2.3 Water Penetration

Water penetration shall not exceed the amount established by AAMA AAMA/NWWDA 101 I.S.2 for each window type when tested in accordance with ASTM E 547.

1.2.4 Thermal Performance

Thermal transmittance for thermally broken aluminum windows with insulating glass shall not exceed R-Value Class 0.59 square meter k/W (R3.33) when tested in accordance with AAMA 1503.1.

1.2.5 Life Safety Criteria

Windows shall conform to NFPA 101 Life Safety Code when rescue and/or second means of escape are indicated.

1.3 SUBMITTALS

Government approval is required for submittals with a "GA" designation; submittals having an "FIO" designation are for information only. The following shall be submitted in accordance with Section 01330 SUBMITTAL PROCEDURES:

SD-01 Data

Aluminum Windows; GA.

Manufacturer's descriptive data and catalog cut sheets.

SD-04 Drawings

Aluminum Windows; GA. Insect Screens; GA.

Drawings indicating elevations of window, rough-opening dimensions for each type and size of window, full-size sections, thicknesses of metal, fastenings, methods of installation and anchorage, connections with other work, type of wall construction, size and spacing of anchors, method of glazing, types and locations of operating hardware, mullion details, weatherstripping details, [screen details including method of attachment,] [window cleaner anchor details], and window schedules showing locations of each window type.

SD-06 Instructions

Aluminum Windows; FIO.

Manufacturer's preprinted installation instructions and cleaning instructions.

SD-09 Reports

Aluminum Windows; FIO.

Reports for each type of aluminum window attesting that identical windows have been tested and meet all performance requirements established under paragraph WINDOW PERFORMANCE.

SD-13 Certificates

Aluminum Windows; FIO.

Certificates stating that the aluminum windows are AAMA certified conforming to requirements of this section. Labels or markings permanently affixed to the window will be accepted in lieu of certificates.

SD-14 Samples

Aluminum Windows; GA.

Manufacturer's standard color samples of the specified finishes.

1.4 QUALIFICATION

Window manufacturer shall specialize in designing and manufacturing the type of aluminum windows specified in this section, and shall have a minimum of 10 years of documented successful experience. Manufacturer shall have the facilities capable of meeting contract requirements, single-source responsibility and warranty.

1.5 NOT USED

1.6 DELIVERY AND STORAGE

Aluminum windows shall be delivered to project site and stored in accordance with manufacturer's recommendations. Damaged windows shall be replaced with new windows.

1.7 WARRANTY

Manufacturer's standard performance guarantees or warranties that extend beyond a 1 year period shall be provided.

PART 2 PRODUCTS

2.1 ALUMINUM WINDOW TYPES

Aluminum windows shall consist of complete units including sash, glass, frame, weatherstripping, and hardware. Windows shall conform to AAMA AAMA/NWWDA 101 I.S.2. Windows shall be double-glazed. Operable windows shall permit cleaning the outside glass from inside the building.

2.1.1 Awning/Projected Windows

Aluminum awning (A) windows shall conform to AAMA AAMA/NWWDA 101 I.S.2 Designation AP-HC40 type consisting of hinged ventilators arranged in a single or vertical series within a common frame. Ventilators shall be operated by a device which shall securely close the ventilator at both jambs without the use of additional manually-controlled locking device. Operating hardware except ventilator arms and rotary operators, shall be concealed within frame and sill. Ventilator arms shall be concealed when windows are closed.

2.2 WEATHERSTRIPPING

Weatherstripping for ventilating sections shall be of type designed to meet water penetration and air infiltration requirements specified in this section in accordance with AAMA AAMA/NWWDA 101 I.S.2, and shall be manufactured of material compatible with aluminum and resistant to weather. Weatherstrips shall be factory-applied and easily replaced in the field. Neoprene or polyvinylchloride weatherstripping are not acceptable where exposed to direct sunlight.

2.3 INSECT SCREENS

Insect screens shall be aluminum window manufacturer's standard design, and shall be provided where scheduled on drawings. Insect screens shall be fabricated of roll-formed tubular-shaped aluminum frames conforming to SMA ANSI/SMA 1004 and (18 x 16) aluminum mesh screening conforming with ISWA IWS 089, Type III.

2.4 ACCESSORIES

2.4.1 Fasteners

Fastening devices shall be window manufacturer's standard design made from aluminum, stainless steel, cadmium-plated steel, nickel/chrome-plated steel in compliance with AAMA AAMA/NWWDA 101 I.S.2. Self-tapping sheet metal screws will not be acceptable for material thicker than 2 mm (1/16 inch).

2.4.2 Hardware

Hardware shall be as specified for each window type and shall be fabricated of aluminum, stainless steel, cadmium-plated steel, zinc-plated steel or nickel/chrome-plated steel in accordance with requirements established by AAMA AAMA/NWWDA 101 I.S.2.

2.4.3 Window Anchors

Anchoring devices for installing windows shall be made of aluminum, cadmium-plated steel, stainless steel, or zinc-plated steel conforming to AAMA AAMA/NWWDA 101 I.S.2.

2.5 GLASS AND GLAZING

Aluminum windows shall be designed for inside glazing, field glazing, and for glass types scheduled on drawings and specified in Section 08810 GLASS AND GLAZING. Units shall be complete with glass and glazing provisions to meet AAMA AAMA/NWWDA 101 I.S.2. Glazing material shall be compatible with aluminum, and shall not require painting.

2.6 FINISH

2.6.1 Anodized Aluminum Finish

Exposed surfaces of aluminum windows shall be finished with anodic coating conforming to AA DAF-45: Architectural Class I, AA-M10-C22-A44, color anodic coating, 0.02 mm (0.7 mil) or thicker. Finish shall be free of scratches and other blemishes.

PART 3 EXECUTION

3.1 INSTALLATION

Aluminum windows shall be installed in accordance with approved shop drawings and manufacturer's published instructions. Aluminum surfaces in contact with masonry, concrete, wood and dissimilar metals other than stainless steel, zinc, cadmium or small areas of white bronze, shall be protected from direct contact using protective materials recommended by AAMA AAMA/NWWDA 101 I.S.2. The completed window installation shall be watertight in accordance with Section 07900 JOINT SEALING. Glass and glazing shall be installed in accordance with requirements of this section and Section 08810 GLASS AND GLAZING.

3.2 ADJUSTMENTS AND CLEANING

3.2.1 Hardware Adjustments

Final operating adjustments shall be made after glazing work is complete. Operating sash or ventilators shall operate smoothly and shall be weathertight when in locked position.

3.2.2 Cleaning

Aluminum window finish and glass shall be cleaned on exterior and interior sides in accordance with window manufacturer's recommendations. Alkaline or abrasive agents shall not be used. Precautions shall be taken to avoid scratching or marring window finish and glass surfaces.

-- End of Section --

SECTION 08700

BUILDERS' HARDWARE

PART 1 GENERAL

1.1 REFERENCES

The publications listed below form a part of this specification to the extent referenced. The publications are referred to in the text by basic designation only.

AMERICAN SOCIETY FOR TESTING AND MATERIALS (ASTM)

ASTM E 283	(1991) Determining the Rate of Air Leakage Through Exterior Windows, Curtain Walls and Doors Under Specified Pressure Differences Across the Specimen

BUILDERS HARDWARE MANUFACTURERS ASSOCIATION (BHMA)

BHMA-01	(Effective thru Jun 1998) Directory of Certified Locks & Latches
BHMA-02	(Effective thru Jul 1997) Directory of Certified Door Closers
BHMA-03	(Effective thru Jul 1997) Directory of Certified Exit Devices
BHMA ANSI/BHMA A156.1	(1997) Butts and Hinges
BHMA ANSI/BHMA A156.2	(1996) Bored and Preassembled Locks and Latches
BHMA ANSI/BHMA A156.3	(1994) Exit Devices
BHMA ANSI/BHMA A156.4	(1992) Door Controls - Closers
BHMA ANSI/BHMA A156.5	(1992) Auxiliary Locks & Associated Products
BHMA ANSI/BHMA A156.6	(1994) Architectural Door Trim
BHMA ANSI/BHMA A156.7	(1988) Template Hinge Dimensions
BHMA ANSI/BHMA A156.13	(1994) Mortise Locks & Latches
BHMA ANSI/BHMA A156.16	(1989) Auxiliary Hardware
BHMA ANSI/BHMA A156.18	(1993) Materials and Finishes
BHMA ANSI/BHMA A156.21	(1996) Thresholds

DOOR AND HARDWARE INSTITUTE (DHI)

DHI-03	(1989) Keying Systems and Nomenclature
DHI-04	(1976) Recommended Locations for Builders' Hardware for Custom Steel Doors and Frames
DHI 05	(1990) Recommended Locations for Architectural Hardware for Standard Steel Doors and Frames
DHI-A115.1G	(1994) Installation Guide for Doors and Hardware
DHI A115-W	(Varies) Wood Door Hardware Standards (Incl All5-W1 thru A115-W9)

NATIONAL FIRE PROTECTION ASSOCIATION (NFPA)

NFPA 80	(1995) Fire Doors and Fire Windows
NFPA 101	(1997; Errata 97-1) Life Safety Code
NFPA 105	(1993) Installation of Smoke-Control Door Assemblies

1.2 SUBMITTALS

Government approval is required for submittals with a "GA" designation; submittals having an "FIO" designation are for information only. The following shall be submitted in accordance with Section 01330 SUBMITTAL PROCEDURES:

SD-01 Data

Hardware and Accessories; GA.

Manufacturer's descriptive data, technical literature, catalog cuts, and installation instructions. Spare parts data for locksets, exit devices, closers, electric locks, electric strikes, electro-magnetic closer holder release devices, and electric exit devices, after approval of the detail drawings, and not later than 1 month prior to the date of beneficial occupancy. The data shall include a complete list of parts and supplies, with current unit prices and source of supply.

SD-04 Drawings

Hardware Devices; GA.

Detail drawings for hardware devices for computerized keying systems, magnetic cards, keyless push button access control systems, and other electrical hardware devices showing complete wiring and schematic diagrams and other details required to demonstrate proper function of units.

SD-07 Schedules

Hardware Schedule; GA.

Hardware schedule listing all items to be furnished. The schedule shall include for each item: the quantities; manufacturer's name and catalog

numbers; the ANSI number specified, sizes; detail information or catalog cuts; finishes; door and frame size and materials; location and hardware set identification cross-references to drawings; corresponding reference standard type number or function number from manufacturer's catalog if not covered by ANSI or BHMA; and list of abbreviations and template numbers.

Keying Schedule; GA.

Keying schedule developed in accordance with DHI-03, after the keying meeting with the user.

SD-13 Certificates

Hardware and Accessories; GA.

The hardware manufacturer's certificates of compliance stating that the supplied material or hardware item meets specified requirements. Each certificate shall be signed by an official authorized to certify in behalf of the product manufacturer and shall identify quantity and date or dates of shipment or delivery to which the certificates apply. A statement that the proposed hardware items appear in BHMA-01, BHMA-02 and BHMA-03 directories of certified products may be submitted in lieu of certificates.

1.3 PREDELIVERY CONFERENCE

Upon approval of the Hardware Schedule, the construction Contractor shall arrange a conference with the hardware supplier, Contracting Officer and the using agency to determine keying system requirements. Location of the key control storage system, set-up and key identification labeling will also be determined.

1.4 DELIVERY, STORAGE, AND HANDLING

Hardware shall be delivered to the project site in the manufacturer's original packages. Each article of hardware shall be individually packaged in the manufacturer's standard commercial carton or container, and shall be properly marked or labeled to be readily identifiable with the approved hardware schedule. Each change key shall be tagged or otherwise identified with the door for which its cylinder is intended. Where double cylinder functions are used or where it is not obvious which is the key side of a door, appropriate instructions shall be included with the lock and on the hardware schedule. Manufacturer's printed installation instructions, fasteners, and special tools shall be included in each package.

1.5 SPECIAL TOOLS

Special tools, such as those supplied by the manufacturer, unique wrenches, and dogging keys, shall be provided as required to adjust hardware items.

1.6 WARRANTY

Manufacturer's standard performance guarantees or warranties that extend beyond a one year period shall be provided.

1.7 OPERATION AND MAINTENANCE MANUALS

Six complete copies of maintenance instructions listing routine maintenance procedures, possible breakdowns and repairs, and troubleshooting guides shall be provided.

PART 2 PRODUCTS

2.1 GENERAL HARDWARE REQUIREMENTS

Hardware shall conform to the requirements specified herein and the HARDWARE SETS listing at the end of this section. Hardware set numbers correspond to the set numbers shown on the drawings.

2.2 TEMPLATES

Requirements for hardware to be mounted on metal doors or metal frames shall be coordinated between hardware manufacturer and door or frame manufacturer by use of templates and other information to establish location, reinforcement required, size of holes, and similar details. Templates of hinges shall conform to BHMA ANSI/BHMA A156.7.

2.3 HINGES

Hinges shall conform to BHMA ANSI/BHMA A156.1. Hinges used on metal doors and frames shall also conform to BHMA ANSI/BHMA A156.7. Except as otherwise specified, hinge sizes shall conform to the hinge manufacturer's printed recommendations.

2.3.1 Hinges for Reverse Bevel Doors with Locks

Hinges for reverse bevel doors with locks shall have pins that are made nonremovable by means such as a set screw in the barrel, or safety stud, when the door is in the closed position.

2.3.2 Contractor's Option

Hinges with antifriction bearings may be furnished in lieu of ball bearing hinges, except where prohibited for fire doors by the requirements of NFPA 80.

2.4 LOCKS AND LATCHES

To the maximum extent possible, locksets, latchsets and deadlocks, and all components thereof, including cylinders and removable cores, shall be the products of a single manufacturer. Lock fronts for double-acting doors shall be rounded. Strikes for wood frames and pairs of wood doors shall be furnished with wrought boxes.

2.4.1 Mortise Lock and Latchsets

Mortise lock, latchsets, and strikes shall be series 1000 and shall conform to BHMA ANSI/BHMA A156.13, operational Grade 1. Mortise type locks and latches for doors 44 mm thick and over shall have adjustable bevel fronts or otherwise conform to the shape of the door. Mortise locks shall have armored fronts.

2.4.2 NOT USED

2.4.3 NOT USED

2.4.4 NOT USED

2.4.5 Lock Cylinders (Mortise, Rim and Bored)

Lock cylinders shall comply with BHMA ANSI/BHMA A156.5. Lock cylinder shall have not less than seven pins. Cylinders shall have key removable type cores. An extension of the existing keying system shall be provided. The cylinders shall be compatible with existing locks that were manufactured by Best, have interchangeable cores. Construction interchangeable cores shall be provided. Disassembly of knob or lockset shall not be required to remove core from lockset. All locksets, lockable exit devices, and padlocks shall accept same interchangeable cores.

2.4.6 NOT USED

2.4.7 NOT USED

2.4.8 Push/Pull Latches

2.4.9 Lock Trim

Lock trim shall be cast, forged, or heavy wrought construction of commercial plain design. In addition to meeting the test requirement of BHMA ANSI/BHMA A156.2 or BHMA ANSI/BHMA A156.13, knobs, lever handles, roses, and escutcheons shall be 1.27 mm (0.050 inch) thick, if unreinforced. If reinforced, the outer shell shall be 0.89 mm (0.035 inch) thick and the combined thickness shall be 1.78 mm (0.070 inch) except that knob shanks shall be 1.52 mm thick. Knob diameter shall be 54 to 57 mm (2-1/8 to 2-1/4 inches). Lever handles shall be of plain design with ends returned to no more than 10 mm from the door face.

2.5 EXIT DEVICES AND EXIT DEVICE ACCESSORIES

Exit devices and exit device accessories shall conform to BHMA ANSI/BHMA A156.3, Grade 1.

2.5.1 Exit Devices and Auxiliary Items

Trim shall be of wrought construction and commercial plain design with straight, beveled, or smoothly rounded sides, corners, and edges. Adjustable strikes shall be provided for rim type and vertical rod devices. Open back strikes shall be provided for pairs of doors with mortise and vertical rod devices; except open back strikes shall be used on labeled doors only where specifically provided for in the published listings. Touch bars shall be provided in lieu of conventional crossbars and arms. Escutcheons shall be provided not less than 175 by 55 mm (7 by 2-1/4 inches). Escutcheons shall be cut to suit cylinders and operating trim.

2.6 NOT USED

2.7 KEYING

Locks shall be keyed in sets or subsets as scheduled. Locks shall be furnished with the manufacturer's standard construction key system. Change keys for locks shall be stamped with change number and the inscription "U.S. Property - Do Not Duplicate." Keys shall be supplied as follows:

Locks:	3 change keys each lock.
Master keyed sets:	3 keys each set.
Grand master keys:	3 total.
Control keys:	3 total.
Construction keys:	3 total.

Blank keys: 6 total.

The keys shall be furnished to the Contracting Officer arranged in a container in sets or subsets as scheduled.

2.8 DOOR CLOSING DEVICES

Door closing devices shall conform to BHMA ANSI/BHMA A156.4, Grade 1. Closing devices shall be products of one manufacturer for each type specified. The opening resistance of closing devices shall not exceed 67 N applied at the latch stile or exceed 22 N where low opening resistance is scheduled.

2.8.1 Surface Type Closers

Surface type closers shall be Grade 1, Series C02000 Full Cover with options PT-4H, Size 1 or 2 through Size 6, and PT-4D with back check position valve. Except as otherwise specified, sizes shall conform to the manufacturer's published recommendations. Closers for outswinging exterior doors shall have parallel arms or shall be top jamb mounted. Closers for doors close to a wall shall be of narrow projection so as not to strike the wall at the 90-degree open position.

2.9 NOT USED

2.10 NOT USED

2.11 NOT USED

2.12 ARCHITECTURAL DOOR TRIM

Architectural door trim shall conform to BHMA ANSI/BHMA A156.6.

2.12.1 Door Protection Plates

2.12.1.1 NOT USED

2.12.1.2 Kick Plates

Kick plates shall be Type stainless steel. Width of plates shall be 50 mm less than door width for single doors and 25 mm (1 inch) less for pairs of doors. Height shall be 250 mm, (10 inches), except where the bottom rail is less than 250 mm (10 inches) the plate shall extend to within 13 mm (1/2 inch) of the panel mold or glass bead. Edges of metal plates shall be beveled.

2.12.1.3 Mop Plates

Mop plates shall be Type stainless steel. Width of plates shall be 50 mm less than door width for single doors and 25 mm less for pairs of doors. The height shall be 100 mm. Edges of metal plates shall be beveled.

2.13 AUXILIARY HARDWARE

Auxiliary hardware, consisting of door holders, and door stops, shall conform to BHMA ANSI/BHMA A156.16. Lever extension flush bolts shall be Type L14081. Dust-proof strikes shall be Type L04011 for doors that are not fire rated. Dust-proof strikes shall be Type L04021 for fire rated doors.

2.14 MISCELLANEOUS

2.14.1 NOT USED

2.14.2 Metal Thresholds

Thresholds shall conform to BHMA ANSI/BHMA A156.21. Thresholds for exterior doors shall be extruded aluminum of the type indicated and shall provide proper clearance and an effective seal with specified weather stripping. Where required, thresholds shall be modified to receive projecting bolts of flush bolts or exit devices. Thresholds for doors accessible to the handicapped shall be beveled with slopes not exceeding 1:2 and with heights not exceeding 13 mm. (1/2 inch). Air leakage rate of weatherstripping shall not exceed 0.775 liters per second per lineal meter of crack when tested in accordance with ASTM E 283 at standard test conditions.

2.14.3 Rain Drips

Extruded aluminum, not less than 1.78 mm thick, bronze anodized. Door sill rain drips shall be 38 mm to 44 mm (1-1/2 inches to 1-3/4 inches) high by 16 mm (5/8 inch) projection. Overhead rain drips shall be approximately 38 mm (1-1/2 inches) high by 63 mm (2-1/2 inches) projection and shall extend 50 mm (2 inches) on either side of the door opening width.

2.14.4 Aluminum Housed Type Weatherseals

Weatherseals of the type indicated shall consist of extruded aluminum retainers not less than 1.78 mm wall thickness with vinyl, neoprene, silicone rubber, polyurethane or vinyl brush inserts. Aluminum shall be bronze anodized. Weatherseal material shall be of an industrial/commercial grade. Seals shall remain functional through all weather and temperature conditions. Air leakage rate of weatherstripping shall not exceed 0.775 liters per second per lineal meter of crack when tested in accordance with ASTM E 283 at standard test conditions.

2.14.5 Gasketing

Gasketing shall be a compression type seal, silicon based, self-adhesive product for use on steel door frames with steel doors for 20-minute. Color shall be bronze. Air leakage rate of weatherstripping shall not exceed 0.775 liters per second per lineal meter of crack when tested in accordance with ASTM E 283 at standard test conditions.

2.14.6 Key Control Storage System

Key control storage system shall conform to BHMA ANSI/BHMA A156.5, Type E8331, capacity 25, and shall be properly labeled for key identification. Set up, identification labeling and location of the key control storage shall be as directed at the Predelivery Conference.

2.14.7 Door Stops

Wall stops, floor stops and combination stop and holders shall conform to BHMA ANSI/BHMA A156.16.

2.15 FASTENINGS

Fastenings of proper type, size, quantity, and finish shall be supplied with each article of hardware. Machine screws and expansion shields shall be used for attaching hardware to concrete or masonry. Fastenings exposed to the weather in the finished work shall be of brass, bronze, or stainless steel. Sex bolts, through bolts, or machine screws and grommet nuts, where used on reverse-bevel exterior doors equipped with half-surface or full-surface hinges, shall employ one-way screws or other approved tamperproof screws. Screws for the jamb leaf of half-mortise and full-surface hinges attached to structural steel frames shall be one-way or other approved tamperproof type.

2.16 FINISHES

Unless otherwise specified, finishes shall conform to those identified in BHMA ANSI/BHMA A156.18. Where painting of primed surfaces is required, painting is specified in Section 09900 PAINTING, GENERAL.

2.17 HARDWARE FOR FIRE DOORS

Hardware for fire doors shall conform to the requirements of NFPA 80and NFPA 101.

PART 3 EXECUTION

3.1 APPLICATION

Hardware shall be located in accordance with DHI-04 and DHI 05, except that deadlocks shall be mounted 1220 mm above finish floor. When approved, slight variations in locations or dimensions will be permitted. Application shall be in accordance with DHI-A115.1G or DHI A115-W. Door control devices for exterior doors such as closers and holders, shall be attached to doors with thru bolts and nuts or sex bolts. Alternate fastening methods may be approved by the Contracting Officer when manufacturers' documentation is submitted to verify that the fastening devices and door reinforcements are adequate to resist wind induced stresses. Electric hardware items and access control devices shall be installed in accordance with manufacturer's printed installation procedures.

3.1.1 Hardware for Fire Doors

Hardware for fire doors shall be installed in accordance with the requirements of NFPA 80. Exit devices installed on fire doors shall have a visible label bearing the marking "Fire Exit Hardware". Other hardware installed on fire doors, such as locksets, closers, and hinges shall have a visible label or stamp indicating that the hardware items have been approved by an approved testing agency for installation on fire-rated doors. Hardware for smoke-control door assemblies shall be installed in accordance with NFPA 105.

3.1.2 Door-Closing Devices

Door-closing devices shall be installed and adjusted in accordance with the templates and printed instructions supplied by the manufacturer of the devices. Insofar as practicable, doors opening to or from halls and corridors shall have the closer mounted on the room side of the door.

3.1.3 Key Control Storage Systems

Key control storage system shall be furnished to the Contracting Officer.

3.1.4 Kick Plates and Mop Plates

Kick plates shall be installed on the push side of single-acting doors and on both sides of double-acting doors. Mop plates shall be installed on the pull side of the single acting doors.

3.1.5 Auxiliary Hardware

Lever extension flush bolts shall be installed at the top and bottom of the inactive leaf of pairs of doors. The bottom bolt shall operate into a dust-proof floor strike or threshold.

3.1.6 Thresholds

Thresholds shall be secured with a minimum of three fasteners per single door width and six fasteners per double door width with a maximum spacing of 300 mm (12 inches). Exterior thresholds shall be installed in a bed of sealant with expansion anchors and stainless steel screws, except that bronze or anodized bronze thresholds shall be installed with expansion anchors with brass screws. Minimum screw size shall be No. 10 length, dependent on job conditions, with a minimum of 19 mm (3/4 inch) thread engagement into the floor or anchoring device used.

3.1.7 Rain Drips

Door sill rain drips shall align with the bottom edge of the door. Overhead rain drips shall align with bottom edge of door frame rabbet. Drips shall be set in sealant and fastened with stainless steel screws.

3.1.8 Weatherseals

Weatherseals shall be located as indicated, snug to door face and fastened in place with color matched metal screws after door and frames have been finish painted. Screw spacing shall be as recommended by manufacturer.

3.1.9 Gasketing

Gasketing shall be installed at the inside edge of the hinge and head and latch sides of door frame. Frames shall be toleranced for a 3 mm clearance between door and frame. Frames shall be treated with tape primer prior to installation.

3.2 NOT USED

3.3 NOT USED

3.4 HARDWARE SETS

Hardware Set #1

Doors 101A, 110B

1 1/2	Pr.	Hinges	A5112 x 4.5 x 4.5 x 630
1	Ea.	Exit Device	Type 10, Function 08, Lever Handle x 630
1	Ea.	Cylinder	E09211A x 630
1	Ea.	Closer	C02011 x 626
1	Ea.	Doorstop	L02101 x 626

1	Set	Weather-stripping	As Specified
1	Ea.	Threshold	Type J32180

Hardware Set #2

Doors 102A, 102C, 108A, 109A, 112A, 117A, 124A, 125A, 119A, 120A, 122B

1 1/2	Pr.	Hinges	A8112 x 4.5 x 4.5 x 626
1	Ea.	Lockset	F05, Lever Handle x 626
1	Ea.	Cylinder	E09211A x 626
1	Ea.	Closer	C02011 x 626
1	Ea.	Doorstop	L02101 x 626
3	Ea.	Silencer	608

Hardware Set #3

Doors 102B, 103A, 105A

1 1/2	Pr.	Hinges	A8112 x 4.5 x 4.5 x 626
1	Ea.	Lockset	F01, Lever Handle x 626
1	Ea.	Closer	C02011 x 626
1	Ea.	Doorstop	L02101 x 626
3	Ea.	Silencer	608

Hardware Set #4

Doors 104A, 106A, 113A, 114A, 118A, 123A

1 1/2	Pr.	Hinges	A8112 x 4.5 x 4.5 x 626
1	Ea.	Lockset	F07, Lever Handle x 626
1	Ea.	Cylinder	E09211A x 626
1	Ea.	Closer	C02011 x 626
1	Ea.	Doorstop	L02101 x 626
3	Ea.	Silencer	608

Hardware Set #5

Doors 111A, 111D, 116C, 116F, 127A, 127B

1 1/2	Pr.	Hinges	A5112 x 4.5 x 4.5 x 630
1	Ea.	Exit Device	Type 10, Function 08, Lever Handle x 630
1	Ea.	Cylinder	E09211A x 630
1	Ea.	Closer	C02011 x 626
1	Set	Weather-stripping	As Specified
1	Ea.	Threshold	Type J32180

Hardware Set #6

Doors 112B, 117B, 121A, 121B

1 1/2	Pr.	Hinges	A8112 x 4.5 x 4.5 x 626
1	Ea.	Lockset	F07, Lever Handle x 626
1	Ea.	Cylinder	E09211A x 626
1	Ea.	Doorstop	L02101 x 626
3	Ea.	Silencer	608

Hardware Set #7

Doors 110A, 122A

1 1/2	Pr.	Hinges	A8112 x 4.5 x 4.5 x 626
1	Ea.	Exit Device	Type 10, Function 8, Lever Handle x 626
1	Ea.	Closer	C02011 x 626
1	Ea.	Doorstop	L02101 x 626
3	Ea.	Silencer	608

Hardware Set #8

Doors 116A, 116B

3	Pr.	Hinges	A8112 x 4.5 x 4.5 x 626
1	Ea.	Lockset	F05, Lever Handle x 626
1	Ea.	Cylinder	E09211A x 626
2	Ea.	Closer	C02011 x 626
1	Ea.	Doorstop	L02101 x 626
2	Ea.	Lever Ext. Flush	L04251 x 626, Top & Bottom of Non-Active Leaf
1	Ea.	Dustproof Strike	L04021 x 626
6	Ea.	Silencer	608

Hardware Set #9

Doors 115A

3	Pr.	Hinges	A8112 x 4.5 x 4.5 x 626
1	Ea.	Lockset	F05, Lever Handle x 626
1	Ea.	Cylinder	E09211A x 626
2	Ea.	Doorstop	L02101 x 626
2	Ea.	Lever Ext. Flush	L04251 x 626, Top & Bottom of Non-Active Leaf
1	Ea.	Dustproof Strike	L04021 x 626
6	Ea.	Silencer	608

Hardware Set #10

Doors 107A

3	Pr.	Hinges	A5112 x 4.5 x 4.5 x 630
1	Ea.	Lockset	F07, Lever Handle x 630
1	Ea.	Cylinder	E09211A x 626
2	Ea.	Closer	C02011 x 626
2	Ea.	Lever Ext. Flush	L04251 x 626, Top & Bottom of Non-Active Leaf
1	Ea.	Dustproof Strike	L04021 x 626
6	Ea.	Silencer	608
1	Set	Weather-stripping	As specified.
1	Ea.	Threshold	Type J32180

-- End of Section --

SECTION 08810

GLASS AND GLAZING

PART 1 GENERAL

1.1 REFERENCES

The publications listed below form a part of this specification to the extent referenced. The publications are referred to in the text by basic designation only.

AMERICAN NATIONAL STANDARDS INSTITUTE (ANSI)

ANSI Z97.1	(1984; R 1994) Safety Performance Specifications and Methods of Test for Safety Glazing Materials Used in Buildings

AMERICAN SOCIETY FOR TESTING AND MATERIALS (ASTM)

ASTM C 509	(1994) Elastomeric Cellular Preformed Gasket and Sealing Material
ASTM C 669	(1995) Glazing Compounds for Back Bedding and Face Glazing of Metal Sash
ASTM C 864	(1993) Dense Elastomeric Compression Seal Gaskets, Setting Blocks, and Spacers
ASTM C 920	(1995) Elastomeric Joint Sealants
ASTM C 1036	(1991) Flat Glass
ASTM C 1048	(1992) Heat-Treated Flat Glass - Kind HS, Kind FT Coated and Uncoated Glass
ASTM D 395	(1989; R 1994) Rubber Property - Compression Set
ASTM E 773	(1988) Seal Durability of Sealed Insulating Glass Units
ASTM E 774	(1992) Sealed Insulating Glass Units
ASTM E 1300	(1994) Determining the Minimum Thickness and Type of Glass Required to Resist a Specified Load

COMMERCIAL ITEM DESCRIPTION (CID)

CID A-A-378	(Basic) Putty Linseed Oil Type, (for Wood-Sash-Glazing)

GLASS ASSOCIATION OF NORTH AMERICA (GANA)

GANA-01	(1997) Glazing Manual

GANA-04 (1995) Engineering Standards Manual

NATIONAL FIRE PROTECTION ASSOCIATION (NFPA)

NFPA 80 (1995) Fire Doors and Fire Windows

1.2 SUBMITTALS

Government approval is required for submittals with a "GA" designation; submittals having an "FIO" designation are for information only. The following shall be submitted in accordance with Section 01330 SUBMITTAL PROCEDURES:

SD-01 Data

Glass; GA. Glazing Accessories; GA.

Manufacturer's descriptive product data, handling and storage recommendations, installation instructions, and cleaning instructions.

SD-04 Drawings

Glazing Materials and Accessories; GA.

Drawings showing complete details of the proposed setting methods, mullion details, edge blocking, size of openings, frame details, materials, and types and thickness of glass.

SD-13 Certificates

Glass; FIO.

Certificates stating that the glass meets the specified requirements. Labels or manufacturers marking affixed to the glass will be accepted in lieu of certificates.

SD-14 Samples

Glass; GA.

Two 203 x 254 mm (8 x 10 inch) samples of each of the following: tinted glass, and insulating glass units.

1.3 SYSTEM DESCRIPTION

Glazing systems shall be fabricated and installed watertight and airtight to withstand thermal movement and wind loading without glass breakage, gasket failure, deterioration of glazing accessories, and defects in the work. Glazed panels shall comply with the safety standards, as indicated in accordance with ANSI Z97.1. Glazed panels shall comply with indicated wind/snow loading in accordance with ASTM E 1300.

1.4 DELIVERY, STORAGE AND HANDLING

Glazing compounds shall be delivered to the site in the manufacturer's unopened containers. Glass shall be stored indoors in a safe, well ventilated dry location in accordance with manufacturer's instructions, and shall not be unpacked until needed for installation. Glass shall not be stored on site over 1 month.

1.5 PROJECT/SITE CONDITIONS

Glazing work shall not be started until outdoor temperature is above 5 degrees C and rising, unless procedures recommended by glass manufacturer and approved by Contracting Officer are made to warm the glass and rabbet surfaces. Ventilation shall be provided to prevent condensation of moisture on glazing work during installation. Glazing work shall not be performed during damp or raining weather.

1.6 WARRANTY

1.6.1 Insulating Glass

Manufacturer shall warrant the insulating glass to be free of fogging or film formation on the internal glass surfaces caused by failure of the hermetic seal for a period of 10 years from Date of Substantial Completion. Warranty shall be signed by manufacturer.

PART 2 PRODUCTS

2.1 FLOAT GLASS

2.1.1 Annealed Glass

Annealed glass shall be Type I transparent flat type, Class 1 - clear, Quality q3 - glazing select, 89 percent light transmittance, 0.94 percent shading coefficient, conforming to ASTM C 1036. Color shall be bronze.

2.2 NOT USED

2.3 INSULATING GLASS

Insulating glass shall be Class A preassembled units of dual-seal construction consisting of lites of glass separated by an aluminum, steel, or stainless steel, spacer and dehydrated space conforming to ASTM E 773 and ASTM E 774. Spacer shall be roll-formed, with bent or tightly welded or keyed and sealed joints to completely seal the spacer periphery and eliminate moisture and hydrocarbon vapor transmission into airspace through the corners. Primary seal shall be compressed polyisobutylene and the secondary seal shall be a specially formulated silicone. Glass types shall be as follows:

2.3.1 NOT USED

2.3.2 NOT USED

2.3.3 NOT USED

2.3.4 Low-E Insulating Glass

Interior and exterior glass panes for Low-E insulating units shall be Type I annealed flat glass, Class [1-clear] [2-tinted] with anti-reflective low-emissivity coating on No. 2 surface (inside surface of exterior pane), Quality q3 - glazing select, conforming to ASTM C 1036. Glass performance shall be K-Value/Winter Nighttime 6.19, shading coefficient 0.72. Color shall be solar bronze.

2.4 REFLECTIVE GLASS

Reflective glass shall conform to the following requirements.

2.4.1 Solar-Reflective Glass

Solar-reflective glass shall be Type I annealed flat type, Class 2-tinted glass with a mirror-like metallic or metallic-oxide highly reflective surface, Quality q3 - glazing select, conforming to ASTM C 1036. Glass performance shall be K-Value/Winter Nighttime 6.19, shading coefficient 0.72. Color shall be solar bronze.

2.5 HEAT-TREATED GLASS

Heat-treated glass shall conform to the following requirements.

2.5.1 Tempered Glass

Tempered glass shall be kind FT fully tempered transparent flat type, Class 2-tinted, Condition A uncoated surface, Quality q3 - glazing select, 38 percent light transmittance, 0.72 percent shading coefficient conforming to ASTM C 1048 and GANA-04. Color shall be solar bronze.

2.6 NOT USED

2.7 NOT USED

2.8 NOT USED

2.9 MIRRORS

2.9.1 Glass Mirrors

Glass for mirrors shall be Type I transparent flat type, Class 1-clear, Glazing Quality q1 6 mm (1/4 inch) thick conforming to ASTM C 1036. Glass color shall be clear. Glass shall be coated on one surface with silver coating, copper protective coating, and mirror backing paint. Silver coating shall be highly adhesive pure silver coating of a thickness which shall provide reflectivity of 83 percent or more of incident light when viewed through 6 mm (1/4 inch) thick glass, and shall be free of pinholes or other defects. Copper protective coating shall be pure bright reflective copper, homogeneous without sludge, pinholes or other defects, and shall be of proper thickness to prevent "adhesion pull" by mirror backing paint. Mirror backing paint shall consist of two coats of special scratch and abrasion-resistant paint , and shall be baked in uniform thickness to provide a protection for silver and copper coatings which will permit normal cutting and edge fabrication.

2.9.2 NOT USED

2.9.3 Mirror Accessories

2.9.3.1 Mastic

Mastic for setting mirrors shall be a [polymer] [_____] type mirror mastic resistant to water, shock, cracking, vibration and thermal expansion. Mastic shall be compatible with mirror backing paint, and shall be approved by mirror manufacturer.

2.9.3.2 Mirror Frames

Mirrors shall be provided with mirror frames (J-mold channels) fabricated of one-piece roll-formed Type 304 stainless steel with No. 4 brushed satin finish and concealed fasteners which will keep mirrors snug to wall. Frames shall be 32 x 6 x 6 mm (1-1/4 x 1/4 x 1/4 inch) continuous at top and bottom of mirrors. Concealed fasteners of type to suit wall construction material shall be provided with mirror frames.

2.9.3.3 Mirror Clips

Concealed fasteners of type to suit wall construction material shall be provided with clips.

2.10 NOT USED

2.11 GLAZING ACCESSORIES

2.11.1 Preformed Tape

Preformed tape shall be elastomeric rubber extruded into a ribbon of a width and thickness suitable for specific application. Tape shall be of type which will remain resilient, have excellent adhesion, and be chemically compatible to glass, metal, or wood.

2.11.2 Sealant

Sealant shall be elastomeric conforming to ASTM C 920, Type S or M, Grade NS, Class 12.5, Use G, of type chemically compatible with setting blocks, preformed sealing tape and sealants used in manufacturing insulating glass. Color of sealant shall be dark bronze.

2.11.3 Glazing Gaskets

Glazing gaskets shall be extruded with continuous integral locking projection designed to engage into metal glass holding members to provide a watertight seal during dynamic loading, building movements and thermal movements. Glazing gaskets for a single glazed opening shall be continuous one-piece units with factory-fabricated injection-molded corners free of flashing and burrs. Glazing gaskets shall be in lengths or units recommended by manufacturer to ensure against pull-back at corners. Glazing gasket profiles shall be as indicated on drawings.

2.11.3.1 Fixed Glazing Gaskets

Fixed glazing gaskets shall be closed-cell (sponge) smooth extruded compression gaskets of cured elastomeric virgin neoprene compounds conforming to ASTM C 509, Type 2, Option 1.

2.11.3.2 Wedge Glazing Gaskets

Wedge glazing gaskets shall be high-quality extrusions of cured elastomeric virgin neoprene compounds, ozone resistant, conforming to ASTM C 864, Option 1, Shore A durometer between 65 and 75.

2.11.3.3 Aluminum Framing Glazing Gaskets

Glazing gaskets for aluminum framing shall be permanent, elastic, non-shrinking, non-migrating, watertight and weathertight.

2.11.4 Putty and Glazing Compound

Glazing compound shall conform to ASTM C 669 for face-glazing metal sash. Putty shall be linseed oil type conforming to CID A-A-378for face-glazing primed wood sash. Putty and glazing compounds shall not be used with insulating glass or laminated glass.

2.11.5 Setting and Edge Blocking

Neoprene setting blocks shall be dense extruded type conforming to ASTM D 395, Method B, Shore A durometer between 70 and 90. Edge blocking shall be Shore A durometer of 50 (+ or - 5). Silicone setting blocks shall be required when blocks are in contact with silicone sealant. Profiles, lengths and locations shall be as required and recommended in writing by glass manufacturer.

PART 3 EXECUTION

3.1 PREPARATION

Openings and framing systems scheduled to receive glass shall be examined for compliance with approved shop drawings, GANA-01 and glass manufacturer's recommendations including size, squareness, offsets at corners, presence and function of weep system, face and edge clearance requirements and effective sealing between joints of glass-framing members. Detrimental materials shall be removed from glazing rabbet and glass surfaces and wiped dry with solvent. Glazing surfaces shall be dry and free of frost.

3.2 INSTALLATION

Glass and glazing work shall be performed in accordance with approved shop drawings, GANA-01, glass manufacturer's instructions and warranty requirements. Glass shall be installed with factory labels intact and removed only when instructed. Wired glass and fire/safety rated glass shall be installed in accordance with NFPA 80. Edges and corners shall not be ground, nipped or cut after leaving factory. Springing, forcing or twisting of units during installation will not be permitted.

3.3 CLEANING

Upon completion of project, outside surfaces of glass shall be washed clean and the inside surfaces of glass shall be washed and polished in accordance with glass manufacturer's recommendations.

3.4 PROTECTION

Glass work shall be protected immediately after installation. Glazed openings shall be identified with suitable warning tapes, cloth or paper flags, attached with non-staining adhesives. Reflective glass shall be protected with a protective material to eliminate any contamination of the reflective coating. Protective material shall be placed far enough away from the coated glass to allow air to circulate to reduce heat buildup and moisture accumulation on the glass. Glass units which are broken, chipped, cracked, abraded, or otherwise damaged during construction activities shall be removed and replaced with new units.

-- End of Section --

SECTION 09250

GYPSUM WALLBOARD

PART 1 GENERAL

1.1 REFERENCES

The publications listed below form a part of this specification to the extent referenced. The publications are referred to in the text by basic designation only.

AMERICAN SOCIETY FOR TESTING AND MATERIALS (ASTM)

ASTM A 580/A 580M	(1995a) Stainless Steel Wire
ASTM A 853	(1993) Steel Wire, Carbon, for General Use
ASTM B 164	(1993) Nickel-Copper Alloy Rod, Bar, and Wire
ASTM C 36	(1997) Gypsum Wallboard
ASTM C 475	(1994) Joint Compound and Joint Tape for Finishing Gypsum Board
ASTM C 557	(1993a) Adhesive for Fastening Gypsum Wallboard to Wood Framing
ASTM C 630/C 630M	(1996a) Water-Resistant Gypsum Backing Board
ASTM C 645	(1996a) Nonstructural Steel Framing Members
ASTM C 754	(1997) Installation of Steel Framing Members to Receive Screw-Attached Gypsum Panel Products
ASTM C 840	(1996) Application and Finishing of Gypsum Board
ASTM C 931/C 931M	(1995a) Exterior Gypsum Soffit Board
ASTM C 1002	(1996a) Steel Drill Screws for the Application of Gypsum Board or Metal Plaster Bases
ASTM C 1047	(1995) Accessories for Gypsum Wallboard and Gypsum Veneer Base

GYPSUM ASSOCIATION (GA)

GA 216	(1996) Application and Finishing of Gypsum Board
GA 600	(1997) Fire Resistance Design Manual

UNDERWRITERS LABORATORIES (UL)

UL Fire Resist Dir (1998) Fire Resistance Directory

1.2 SYSTEM DESCRIPTION

1.2.1 Fire-Rated Construction

Joints of fire-rated gypsum board enclosures shall be closed and sealed in accordance with UL test requirements or GA requirements, and as required to meet pressurization requirements. Penetrations through rated partitions and ceilings shall be sealed tight in accordance with tested systems. Fire ratings shall be as indicated.

1.2.2 Pressurized Enclosures

Pressurized fire-rated gypsum board enclosures shall allow the mechanical and electrical life-safety systems to operate in accordance with the design intent. Air pressure within elevator shaft shall be 360 Pa. Air pressure within stair shaft shall be 240 Pa. Maximum mid-span deflection shall be L/360.

1.3 SUBMITTALS

Government approval is required for submittals with a "GA" designation; submittals having an "FIO" designation are for information only. The following shall be submitted in accordance with Section 01330 SUBMITTAL PROCEDURES:

SD-04 Drawings

Steel Framing; GA. Fire-Resistant Assemblies; GA.

Drawings and installation details for ceiling framing, furring, special wall framing, and framed openings in walls and ceilings.

SD-13 Certificates

Gypsum Wallboard; FIO. Water-Resistant Gypsum Board; FIO. Exterior Gypsum Soffit Board; FIO. Steel Framing; FIO. Fire-Rated Gypsum Board; FIO.

Certificates stating that the steel framing and gypsum wallboard meet the specified requirements.

1.4 QUALIFICATIONS

Manufacturer shall specialize in manufacturing the types of material specified and shall have a minimum of 5 years of documented successful experience. Installer shall specialize in the type of gypsum board work required and shall have a minimum of 3 years of documented successful experience.

1.5 DELIVERY, STORAGE AND HANDLING

Materials shall be delivered in original containers bearing the name of manufacturer, contents, and brand name. Materials shall be stored off the ground in a weathertight structure for protection. Gypsum boards shall be stacked flat, off floor and supported to prevent sagging and warpage. Adhesives and joint materials shall be stored in accordance with

manufacturer's printed instructions. Damaged or deteriorated materials shall be removed from jobsite.

1.6 ENVIRONMENTAL CONDITIONS

Environmental conditions for application and finishing of gypsum board shall be in accordance with ASTM C 840. During the application of gypsum board without adhesive, a room temperature of not less than 4 degrees C shall be maintained. During the application of gypsum board with adhesive, a room temperature of not less than 10 degrees C shall be maintained for 48 hours prior to application and continuously afterwards until completely dry. Building spaces shall be ventilated to remove water not required for drying joint treatment materials. Drafts shall be avoided during dry hot weather to prevent materials from drying too rapidly.

PART 2 MATERIALS

2.1 NON-LOADBEARING STUD WALLS

2.1.1 Studs

Studs for non-loadbearing walls shall conform to ASTM C 645. Studs shall be C-shaped, roll formed steel with minimum uncoated design thickness of 0.084 mm (0.0329 in) made from G40 hot-dip galvanized coated sheet.

2.1.2 Runner Tracks

Floor and ceiling runner tracks shall conform to ASTM C 645. Tracks shall be prefabricated, U-shaped with minimum 25 mm (1 inch) flanges, unpunched web, thickness to match studs, made from G40 hot-dip galvanized coated sheet.

2.2 NOT USED

2.3 SUSPENDED CEILING FRAMING

Suspended ceiling framing system shall have the capability to support the finished ceiling, light fixtures, air diffusers, and accessories, as shown. The suspension system shall have a maximum deflection of L/240. Carrying channels shall be formed from minimum 1.40 mm (0.0548 in) thick cold-rolled steel, 38 x 19 mm. (1-1/2 x 3/4 inch). Furring members shall be formed from cold-rolled steel, 22 x 65 mm (7/8 x 2-9/16 inch). Carrying channels and furring members shall be made from hot-dip galvanized coated sheet.

2.4 GYPSUM BOARD

Gypsum board shall have square-cut ends, tapered or beveled edges and shall be maximum possible length. Gypsum board thickness shall be as shown.

2.4.1 Standard Gypsum Board

Regular gypsum board shall conform to ASTM C 36, and shall be 1200 mm wide.

2.4.2 Fire-Rated Gypsum Board

Fire-rated gypsum board shall conform to ASTM C 36, and shall be Type X or Type C as required, 1200 mm wide.

2.4.3 Water-Resistant Gypsum Board

Water-resistant gypsum board shall conform to ASTM C 630/C 630M, regular, with water-resistant paper faces, paintable surfaces, and shall be 1200 mm width and maximum permissible length.

2.4.4 NOT USED

2.4.5 NOT USED

2.4.6 NOT USED

2.4.7 Exterior Gypsum Soffit Board

Exterior gypsum soffit board shall conform to ASTM C 931/C 931M, regular, 1200 mm wide.

2.5 TRIM, MOLDINGS, AND ACCESSORIES

2.5.1 Taping and Embedding Compound

Taping and embedding compound shall conform to ASTM C 475. Compound shall be specifically formulated and manufactured for use in embedding tape at gypsum wallboard joints and fastener heads, and shall be compatible with tape and substrate.

2.5.2 Finishing or Topping Compound

Finishing or topping compound shall conform to ASTM C 475. Compound shall be specifically formulated and manufactured for use as a finishing compound for gypsum board.

2.5.3 All-Purpose Compound

All-purpose compound shall be specifically formulated and manufactured to use as a taping and finishing compound, and shall be compatible with tape and substrate.

2.5.4 Joint Tape

Joint tape shall conform to ASTM C 475 and shall be as recommended by gypsum board manufacturer.

2.5.5 Trim, Control Joints, Beads, Stops and Nosings

Items used to protect edges, corners, and to provide architectural features shall be in accordance with ASTM C 1047.

2.6 FASTENINGS AND ADHESIVES

2.6.1 NOT USED

2.6.2 Screws

Screws shall conform to ASTM C 1002. Screws shall be self-drilling and self-tapping steel, Type S for wood or light-gauge steel framing.

2.6.3 Adhesives

Adhesives shall conform to ASTM C 557. Adhesives shall be formulated to

bond gypsum board to wood framing members. For securing gypsum board to metal framing, adhesive shall be as recommended by gypsum board manufacturer.

2.6.4 Hangers

Suspended ceiling runner channel hangers shall be soft, annealed steel wire not less than No. 8 SWG, conforming to ASTM A 853 or flat iron or steel straps, at least 2 x 22 mm (3/32 x 7/8 inch) size, coated with zinc, cadmium, or rust-inhibiting paint].

2.6.5 Wire and Clip Type Fastenings

Tie wire, clips, rings, and other fastenings shall be corrosion-resisting steel conforming to ASTM A 580/A 580M, composition 302, 304, or 316, Condition A, or nickel-copper alloy conforming to ASTM B 164, annealed condition except that walls, partitions, and other vertical surfaces not incorporated in ceiling construction may be erected with soft, annealed steel conforming to ASTM A 853.

2.6.5.1 Tie Wire

Tie wire for constructing partitions and vertical furring, for securing metal lath to supports, and for lacing shall be not less than No. 18 SWG. Tie wire for other applications shall be not less than No. 16 SWG.

2.6.5.2 Clips

Clips used in lieu of tie wire for securing the furring channels to the runner channels in ceiling construction shall be made from strip not less than 3 mm (1/8 inch) thick or shall be hairpin clip, formed of wire not less than 0.4 mm (0.01620 inch) nominal diameter. Other clips and rings or fastenings of similar materials shall be equivalent in holding power to that provided by tie wire for the specific application.

PART 3 EXECUTION

3.1 INTERIOR WALL FRAMING

Steel framing and furring members shall be installed in accordance with ASTM C 754. Members shall be in alignment with spacings not to exceed the maximum spacings indicated on drawings. Runners shall be aligned accurately at the floor and ceiling and securely anchored.

3.1.1 Wall Openings

The framing system shall provide for the installation and anchorage of the required subframes or finish frames for wall openings at doors, pass-through openings, and access panels. Partitions abutting continuous suspended ceilings shall be strengthened for rigidity at rough openings of more than 750 mm (30 inches) wide. Studs at openings shall be 0.84 mm (0.0329 in) (0.0329 in) minimum bare metal thickness and spot grouted at jamb anchor inserts. Double studs shall be fastened together with screws and secured to floor and overhead runners. Two studs shall be used for framing solid-core doors, doors over 900 mm (36 inches) wide and extra-heavy doors such as X-ray room doors.

3.1.2 Wall Control Joints

Control joints for expansion and contraction in the walls shall be constructed with double studs installed 13 mm apart in interior walls or wall furrings where indicated on drawings. Control joint spacing shall not exceed 9 m. Ceiling-height door frames may be used as vertical control joints. Door frames of less than ceiling height may be used as control joints only if standard control joints extend to ceiling from both corners of top of door frame. Control joints between studs shall be filled with firesafing insulation in fire rated partitions.

3.2 NOT USED

3.3 SUSPENDED CEILING FRAMING

Suspended ceiling system framing shall be installed in accordance with ASTM C 754.

3.3.1 Hangers

Hangers shall be spaced not more than 1200 mm (48 inches) along runner channels and 900 mm (36 inches) in the other direction or 1050 mm in both directions unless otherwise indicated. Locations of hanger wires shall be coordinated with other work. Hangers at ends of runner channels shall be located not more than 150 mm from wall. Hanger wire shall be looped around bottom chord of open-web steel joists, or secured to structural elements with suitable fasteners. Sags or twists which develop in the suspended system shall be adjusted. Damaged or faulty parts shall be replaced.

3.3.2 Main Runners

Main runner channels shall be installed in accordance with ASTM C 754. Hanger wires shall be double strand saddle-tied to runner channels and the ends of hanger wire shall be twisted three times around itself. Main runners shall be located to within 150 mm (6 inches) of the paralleling wall to support the ends of cross furring. Main runners shall not come in contact with abutting masonry or concrete walls. Where main runners are spliced, ends shall be overlapped 300 mm (12 inches) with flanges of channels interlocked, and shall be securely tied at each end of splice with wire looped twice around the channels.

3.3.3 Furring Channels

Furring channels shall be spaced in accordance with ASTM C 754. Furring channels shall be secured to the runner channels and to structural supports at each crossing with tie wire, hairpin clips, or equivalent fastenings. Furring channels shall be located within 50 mm of parallel walls and beams, and shall be cut 13 mm short of abutting walls.

3.3.4 Ceiling Openings

Support members shall be provided as required at ceiling openings for access panels, recessed light fixtures, and air supply or exhaust. Support members shall be not less than 38 mm (1-1/2 inch) main runner channels and vertically installed suspension wires or straps shall be located to provide at least the minimum support specified herein for furring and wallboard attachment. Intermediate structural members not a part of the structural system, shall be provided for attachment or suspension of support members.

3.3.5 Light Fixtures and Air Diffusers

Light fixtures and air diffusers shall be supported directly from suspended ceiling runners. Wires shall be provided at appropriate locations to carry the weight of recessed or surface mounted light fixtures and air diffusers.

3.3.6 Control Joints

Ceiling control joints for expansion and contraction shall be located where indicated on drawings. A control joint or intermediate blocking shall be installed where ceiling framing members change direction.

3.3.6.1 NOT USED

3.3.6.2 Interior Ceilings Without Perimeter Relief

Control joints shall be installed so that linear dimensions between control joints shall not exceed 9 m (30 feet) in either direction nor more than 84 square meters. (900 square feet).

3.3.6.3 Exterior Ceilings

Control joints shall be installed so the linear dimensions between control joints shall not exceed 9 m (30 feet) in either direction nor more than 84 square meters (900 square feet).

3.4 APPLICATION OF GYPSUM BOARD

Gypsum board shall be installed in accordance with ASTM C 840 and GA 216 and as specified. Paragraph 17.3.1 GENERAL of ASTM C 840 which permits usage of water resistant gypsum board as a base for adhesive application of ceramic or plastic tile on ceilings, does not apply. Edges and ends of gypsum boards shall be cut to obtain neat fitting joints. End joints of adjoining boards shall be staggered, and shall be staggered on opposite sides of wall. Boards shall be applied with moderate contact without forcing in place. Holes for pipes, fixtures or other small openings shall be cut with a tool which will provide a neat fit. Screws shall be driven so that the heads are slightly below the plane of paper face. Fracturing the paper face or damaging the core shall be avoided. Trim shall be installed at external and internal angles formed by the intersecting gypsum board surfaces with other surfaces. Corner beads shall be installed to vertical and horizontal corners in accordance with manufacturer's published instructions.

3.4.1 NOT USED

3.4.2 NOT USED

3.4.3 Water-Resistant Gypsum Board

Water-resistant gypsum board shall be installed at the locations indicated.

3.4.4 Adhesively-Applied Gypsum Board

Walls scheduled to receive adhesively-applied gypsum board shall be dry, free of dust, oil, or form release agents, protrusions or voids, or foreign matter that would affect a proper bond.

3.5 TRIM, MOLDINGS, AND ACCESSORIES INSTALLATION

Trim, moldings and accessories shall be installed in accordance with GA 216.

3.6 TAPING AND FINISHING

Gypsum board taping and finishing shall be performed in accordance with ASTM C 840. Boards shall be kept free of dirt, oil and other foreign matter that could cause a lack of bond. Screw heads, dents, gouges, and cut-outs shall be filled with joint compound and sanded. Accessories at exposed joints, edges, corners, openings, and similar locations shall be taped, floated with joint compound, and sanded to produce surfaces ready for gypsum board finishes.

3.7 FIRE-RESISTANT ASSEMBLIES

Gypsum wallboard construction for fire-rated assemblies shall be in accordance with UL Fire Resist Dir, or GA 600 for the design number indicated on drawings.

3.8 PATCHING

Surface defects and damage shall be corrected as required to leave gypsum board smooth, uniform in appearance, and ready to receive finish as specified.

-- End of Section --

SECTION 09310

CERAMIC TILE

PART 1 GENERAL

1.1 REFERENCES

The publications listed below form a part of this specification to the extent referenced. The publications are referred to in the text by basic designation only.

AMERICAN NATIONAL STANDARDS INSTITUTE (ANSI)

ANSI A108.1A	(1992) Installation of Ceramic Tile in the Wet-Set Method, with Portland Cement Mortar
ANSI A108.1B	(1992) Installation of Ceramic Tile on a Cured Portland Cement Mortar Setting Bed with Dry-Set or Latex Portland Cement Mortar
ANSI A108.4	(1992) Installation of Ceramic Tile with Organic Adhesives or Water Cleanable Tile Setting Epoxy Adhesive
ANSI A108.5	(1992) Installation of Ceramic Tile with Dry-Set Portland Cement Mortar or Latex-Portland Cement Mortar
ANSI A108.10	(1992) Installation of Grout in Tilework
ANSI A108.11	(1992) Interior Installation of Cementitious Backup Units
ANSI A118.1	(1992) Dry-Set Portland Cement Mortar
ANSI A118.4	(1992) Latex-Portland Cement Mortar
ANSI A118.6	(1992) Ceramic Tile Grouts
ANSI A118.9	(1992) Test Methods and Specifications for Cementitious Backer Units
ANSI A136.1	(1992) Organic Adhesives for Installation of Ceramic Tile
ANSI A137.1	(1988) Ceramic Tile

AMERICAN SOCIETY FOR TESTING AND MATERIALS (ASTM)

ASTM C 241	(1990) Abrasion Resistance of Stone Subjected to Foot Traffic
ASTM C 373	(1988; R 1994) Water Absorption, Bulk Density, Apparent Porosity, and Apparent

	Specific Gravity of Fired Whiteware Products
ASTM C 648	(1984; R 1994) Breaking Strength of Ceramic Tile
ASTM C 1026	(1987; R 1996) Measuring the Resistance of Ceramic Tile to Freeze-Thaw Cycling
ASTM C 1027	(1984; R 1990) Determining Visible Abrasion Resistance of Glazed Ceramic Tile
ASTM C 1028	(1996) Determining the Static Coefficient of Friction of Ceramic Tile and Other Like Surfaces by the Horizontal Dynamometer Pull-Meter Method

MARBLE INSTITUTE OF AMERICA (MIA)

MIA-01	(1991) Design Manual IV Dimensional Stone

TILE COUNCIL OF AMERICA (TCA)

TCA-01	(1997) Handbook for Ceramic Tile Installation

1.2 SUBMITTALS

Government approval is required for submittals with a "GA" designation; submittals having an "FIO" designation are for information only. The following shall be submitted in accordance with Section 01330 SUBMITTAL PROCEDURES:

SD-01 Data

Tile; FIO. Setting-Bed; FIO. Mortar, Grout, and Adhesive; FIO.

Manufacturer's catalog data.

SD-06 Instructions

Tile; FIO. Mortar and Grout; FIO.

Manufacturers preprinted installation and cleaning instructions.

SD-13 Certificates

Tile; FIO. Mortar, Grout, and Adhesive; FIO.

Certificates indicating conformance with specified requirements. A master grade certificate shall be furnished for tile.

SD-14 Samples

Tile; GA. Accessories; GA. Marble Thresholds; GA.

Samples of sufficient size to show color range, pattern, type and joints.

1.3 DELIVERY AND STORAGE

Materials shall be delivered to the project site in manufacturer's original unopened containers with seals unbroken and labels and hallmarks intact. Materials shall be kept dry, protected from weather, and stored under cover in accordance with manufacturer's instructions.

1.4 ENVIRONMENTAL REQUIREMENTS

Ceramic tile work shall not be performed unless the substrate and ambient temperature is at least 10 degrees C (50 degrees F) and rising. Temperature shall be maintained above 10 degrees C (50 degrees F) while the work is being performed and for at least 7 days after completion of the work. When temporary heaters are used they shall be vented to the outside to avoid carbon dioxide damage to new tilework.

1.5 WARRANTY

Manufacturer's standard performance guarantees or warranties that extend beyond a 1-year period shall be provided.

PART 2 PRODUCTS

2.1 TILE

Tile shall be standard grade conforming to ANSI A137.1. Containers shall be grade sealed. Seals shall be marked to correspond with the marks on the signed master grade certificate. Tile shall be impact resistant with a minimum breaking strength for wall tile of 41 kg and 113 kg for floor tile in accordance with ASTM C 648. Tile for cold climate projects shall be rated frost resistant by the manufacturer as determined by ASTM C 1026. Water absorption shall be 0.50 maximum percent in accordance with ASTM C 373. Floor tile shall have a minimum coefficient of friction of 0.50 wet and dry in accordance with ASTM C 1028. Floor tile shall be Class III-Medium Heavy Traffic, durability classification as rated by the manufacturer when tested in accordance with ASTM C 1027for abrasion resistance as related to foot traffic.

2.1.1 Mosaic Tile

Ceramic mosaic tile and trim shall be unglazed natural clay with cushion edges porcelain unpolished with sharply formed face. Tile size shall be 50 x 50 mm. Color shall be as indicated on the drawings.

2.1.2 Quarry Tile

Quarry tile and trim shall be unglazed with [smooth surface] [abrasive surface]. Tile shall be 150 x 150 x 13 mm. Color shall be as indicated on the drawings.

2.1.3 NOT USED

2.1.4 Glazed Wall Tile

Glazed wall tile and trim shall be cushion edged with bright glaze. Tile shall be 150 x 150 mm. Color shall be indicated on the drawings.

2.2 NOT USED

2.3 WATER

Water shall be potable.

2.4 MORTAR, GROUT, AND ADHESIVE

Mortar, grout, and adhesive shall conform to the following:

2.4.1 Dry-Set Portland Cement Mortar

ANSI A118.1.

2.4.2 NOT USED

2.4.3 Latex-Portland Cement Mortar

ANSI A118.4.

2.4.4 Ceramic Tile Grout

ANSI A118.6; latex-portland cement grout.

2.4.5 Organic Adhesive

ANSI A136.1, Type I.

2.4.6 NOT USED

2.4.7 NOT USED

2.4.8 Cementitious Backer Board

Cementitious backer units shall comply with ANSI A118.9.

2.5 MARBLE THRESHOLDS

Marble thresholds shall be of size required by drawings or conditions. Marble shall be Group A as classified by MIA-01. Marble shall have a fine sand-rubbed finish and shall be gray in color as approved by the Contracting Officer. Marble abrasion shall be not less than 12.0 when tested in accordance with ASTM C 241.

PART 3 EXECUTION

3.1 PREPARATORY WORK AND WORKMANSHIP

Surface to receive tile shall be inspected and shall conform to the requirements of ANSI A108.1A or ANSI A108.1B for surface conditions for the type setting bed specified and for workmanship. Variations of surface to be tiled shall fall within maximum values shown below:

TYPE	WALLS	FLOORS
Dry-Set Mortar	3 mm in 2.4 meters	3.0 mm in 3 meters
Organic Adhesives	3 mm in 2.4 meters	1.5 mm in 1 meters
Latex portland cement mortar	3 mm in 2.4 meters	3.0 mm in 3 meters
Epoxy	3 mm in 2.4 meters	3.0 mm in 3 meters

3.2 GENERAL INSTALLATION REQUIREMENTS

Tile work shall not be started until roughing in for mechanical and

electrical work has been completed and tested, and built-in items requiring membrane waterproofing have been installed and tested. Floor tile installation shall not be started in spaces requiring wall tile until after wall tile has been installed. Tile in colors and patterns indicated shall be applied in the area shown on the drawings. Tile shall be installed with the respective surfaces in true even planes to the elevations and grades shown. Special shapes shall be provided as required for sills, jambs, recesses, offsets, external corners, and other conditions to provide a complete and neatly finished installation. Tile bases and coves shall be solidly backed with mortar.

3.3 INSTALLATION OF WALL TILE

Wall tile shall be installed in accordance with the TCA-01, method 243, 244, AND W202.

3.3.1 NOT USED

3.3.2 Dry-Set Mortar and Latex-Portland Cement Mortar

Latex-portland cement shall be used to install tile in accordance with ANSI A108.5. Latex portland cement shall be used when installing porcelain ceramic tile.

3.3.3 Organic Adhesive

Organic adhesive installation of ceramic tile shall conform to ANSI A108.4.

3.4 INSTALLATION OF FLOOR TILE

Floor tile shall be installed in accordance with TCA-01, method F113 or F115. Shower receptors shall be installed in accordance with TCA-01, method B414.

3.4.1 NOT USED

3.4.2 Dry-Set and Latex-Portland Cement

Latex-portland cement mortar shall be used to install tile directly over properly cured, plane, clean concrete slabs in accordance with ANSI A108.5. Latex portland cement shall be used when installing porcelain ceramic tile.

3.4.3 NOT USED

3.4.4 Ceramic Tile Grout

Ceramic Tile grout shall be prepared and installed in accordance with ANSI A108.10.

3.4.5 Waterproofing

Shower pans are specified in Section 15400 PLUMBING, GENERAL PURPOSE. Waterproofing under concrete fill shall conform to the requirements of Section 07112 BITUMINOUS WATERPROOFING.

3.4.6 NOT USED

3.4.7 Cementitious Backer Board

Cementitious backer units shall be installed in accordance with ANSI A108.11. Fasteners shall be type designed for cement board application.

3.5 NOT USED

3.6 INSTALLATION OF MARBLE THRESHOLDS

Thresholds shall be installed where indicated in a manner similar to that of the ceramic tile floor. Thresholds shall be the full width of the opening. Head joints at ends shall not exceed 6 mm in width and shall be grouted full as specified for ceramic tile.

3.7 NOT USED

3.8 EXPANSION JOINTS

Joints shall be formed as indicated and sealed as specified in Section 07900 JOINT SEALING.

3.8.1 Walls

Expansion joints shall be provided at control joints in backing material. Wherever backing material changes, an expansion joint shall be installed to separate the different materials.

3.8.2 Floors

Expansion joints shall be provided over construction joints, control joints, and expansion joints in concrete slabs. Expansion joints shall be provided where tile abuts restraining surfaces such as perimeter walls, curbs and columns and at intervals of 7.2 to 10.8 m (24 to 36 feet) each way in large interior floor areas and 3.6 to 4.8 m (12 to 16 feet) each way in large exterior areas or areas exposed to direct sunlight or moisture. Expansion joints shall extend through setting-beds and fill.

3.9 CLEANING AND PROTECTING

Upon completion, tile surfaces shall be thoroughly cleaned in accordance with manufacturer's approved cleaning instructions. Acid shall not be used for cleaning glazed tile. Floor tile with resinous grout or with factory mixed grout shall be cleaned in accordance with instructions of the grout manufacturer. After the grout has set, tile wall surfaces shall be given a protective coat of a noncorrosive soap or other approved method of protection. Tiled floor areas shall be covered with building paper before foot traffic is permitted over the finished tile floors. Board walkways shall be laid on tiled floors that are to be continuously used as passageways by workmen. Damaged or defective tiles shall be replaced.

-- End of Section --

SECTION 09510

ACOUSTICAL CEILINGS

PART 1 GENERAL

1.1 REFERENCES

The publications listed below form a part of this specification to the extent referenced. The publications are referred to in the text by basic designation only.

AMERICAN SOCIETY FOR TESTING AND MATERIALS (ASTM)

ASTM C 635	(1995) Manufacture, Performance, and Testing of Metal Suspension Systems for Acoustical Tile and Lay-In Panel Ceilings
ASTM C 636	(1996) Installation of Metal Ceiling Suspension Systems for Acoustical Tile and Lay-In Panels
ASTM E 1264	(1990) Standard Classification for Acoustical Ceiling Products
ASTM E 1414	(1991a) Standard Test for Airborne Sound Attenuation Between Rooms Sharing a Common Ceiling Plenum

1.2 GENERAL REQUIREMENTS

Acoustical treatment shall consist of sound controlling units mechanically mounted on a ceiling suspension system. The unit size, texture, finish, and color shall be as specified. The Contractor has the option to substitute inch-pound (I-P) Recessed Light Fixtures (RLF) for metric RLF. If the Contractor opts to furnish I-P RLF, other ceiling elements like acoustical ceiling tiles, air diffusers, air registers and grills, shall also be I-P products. The Contractor shall coordinate the whole ceiling system with other details, like the location of access panels and ceiling penetrations, etc., shown on the drawings. If I-P products are used, the Contractor shall be responsible for all associated labor and materials and for the final assembly and performance of the specified work and products. The location and extent of acoustical treatment shall be as shown on the drawings.

1.3 SUBMITTALS

Government approval is required for submittals with a "GA" designation; submittals having an "FIO" designation are for information only. The following shall be submitted in accordance with Section 01330 SUBMITTAL PROCEDURES:

SD-01 Data

Acoustical Ceiling System; GA.

Manufacturer's descriptive data, catalog cuts, and installation instructions.

SD-04 Drawings

Acoustical Ceiling System; GA.

Drawings showing suspension system, method of anchoring and fastening, details, and reflected ceiling plan.

SD-13 Certificates

Acoustical Units; FIO.

Certificate attesting that the mineral based acoustical units furnished for the project contains recycled material and showing an estimated percent of such material.

SD-14 Samples

Acoustical Units; GA.

Two samples of each type of acoustical unit and each type of suspension grid tee section showing texture, finish, and color.

1.4 DELIVERY AND STORAGE

Materials shall be delivered to the site in the manufacturer's original unopened containers with brand name and type clearly marked. Materials shall be carefully handled and stored in dry, watertight enclosures. Immediately before installation, acoustical units shall be stored for not less than 24 hours at the same temperature and relative humidity as the space where they will be installed in order to assure proper temperature and moisture acclimation.

1.5 ENVIRONMENTAL REQUIREMENTS

A uniform temperature of not less than 16 degrees C (60 degrees F) nor more than 29 degrees C (85 degrees F) and a relative humidity of not more than 70 percent shall be maintained before, during, and after installation of acoustical units.

1.6 SCHEDULING

Interior finish work such as plastering, concrete and terrazzo work shall be complete and dry before installation. Mechanical, electrical, and other work above the ceiling line shall be completed and heating, ventilating, and air conditioning systems shall be installed and operating in order to maintain temperature and humidity requirements.

1.7 WARRANTY

Manufacturer's standard performance guarantees or warranties that extend beyond a one year period shall be provided.

1.8 EXTRA MATERIALS

Spare tiles of each color shall be furnished at the rate of 5 tiles for each 1000 tiles installed. Tiles shall be from the same lot as those

installed.

PART 2 PRODUCTS

2.1 ACOUSTICAL UNITS

Acoustical units shall conform to ASTM E 1264, Class A, and the following requirements:

2.1.1 Units for Exposed-Grid System

Type: III (mineral fiber with painted finish). Type III acoustical units shall have a minimum recycled material content of 18 percent.

Minimum NRC: 0.55 when tested on mounting No. E-400

Pattern: C.

Nominal size: 600 by 600 mm (24 by 24 inches).

Edge detail: Trimmed and butt.

Finish: Factory-applied standard finish.

Minimum LR coefficient: 0.70.

Minimum CAC: 40.

2.2 SUSPENSION SYSTEM

Suspension system shall be standard, exposed-grid, standard width flange, and shall conform to ASTM C 635 for intermediate-duty systems. Surfaces exposed to view shall be aluminum or steel with a factory-applied white baked-enamel finish. Wall molding shall have a flange of not less than 23 mm (15/16 inch). Standard shall be provided. Suspended ceiling framing system shall have the capability to support the finished ceiling, light fixtures, air diffusers, and accessories, as shown. The suspension system shall have a maximum deflection of 1/360 of span length.

2.3 HANGERS

Hangers shall be galvanized steel wire. Hangers and attachment shall support a minimum 1330 N ultimate vertical load without failure of supporting material or attachment.

2.4 ACCESS PANELS

Access panels shall match adjacent acoustical units and shall be designed and equipped with suitable framing and fastenings for removal and replacement without damage. Panel shall be not less than 300 by 300 mm (12 by 12 inches) or more than 300 by 600 mm (12 by 24 inches). An identification plate of 0.8 mm (0.032 inch) thick aluminum, 19 mm (3/4 inch) in diameter, stamped with the letters "AP" and finished the same as the unit, shall be attached near one corner on the face of each access panel.

2.5 NOT USED

2.6 FINISHES

Acoustical units and suspension system members shall have manufacturer's standard textures, patterns and finishes as specified. Ceiling suspension system components shall be treated to inhibit corrosion.

2.7 COLORS AND PATTERNS

Colors and patterns for acoustical units and suspension system components shall be as scheduled.

2.8 CEILING ATTENUATION CLASS AND TEST

Ceiling attenuation class (CAC) range of acoustical units, when required, shall be determined in accordance with ASTM E 1414. Test ceiling shall be continuous at the partition and shall be assembled in the suspension system in the same manner that the ceiling will be installed on the project. System shall be tested with all acoustical units installed.

PART 3 EXECUTION

3.1 INSTALLATION

Acoustical work shall be provided complete with necessary fastenings, clips, and other accessories required for a complete installation. Mechanical fastenings shall not be exposed in the finished work. Hangers shall be laid out for each individual room or space. Hangers shall be placed to support framing around beams, ducts, columns, grilles, and other penetrations through ceilings. Main runners and carrying channels shall be kept clear of abutting walls and partitions. At least two main runners shall be provided for each ceiling span. Wherever required to bypass an object with the hanger wires, a subsuspension system shall be installed, so that all hanger wires will be plumb.

3.1.1 Suspension System

Suspension system shall be installed in accordance with ASTM C 636 and as specified herein. There shall be no hanger wires or other loads suspended from underside of steel decking.

3.1.1.1 Plumb Hangers

Hangers shall be plumb and shall not press against insulation covering ducts and pipes.

3.1.1.2 Splayed Hangers

Where hangers must be splayed (sloped or slanted) around obstructions, the resulting horizontal force shall be offset by bracing, countersplaying, or other acceptable means.

3.1.2 Wall Molding

Wall molding shall be provided where ceilings abut vertical surfaces. Wall molding shall be secured not more than 75 mm from ends of each length and not more than 400 mm on centers between end fastenings. Wall molding springs shall be provided at each acoustical unit in semi-exposed or concealed systems.

3.1.3 Acoustical Units

Acoustical units shall be installed in accordance with the approved installation instructions of the manufacturer. Edges of acoustical units shall be in close contact with metal supports, with each other, and in true alignment. Acoustical units shall be arranged so that units less than one-half width are minimized. Units in exposed-grid system shall be held in place with manufacturer's standard hold-down clips, if units weigh less than 5 kg per square m (1 psf) or if required for fire resistance rating.

3.2 CEILING ACCESS PANELS

Ceiling access panels shall be located directly under the items which require access.

3.3 CLEANING

Following installation, dirty or discolored surfaces of acoustical units shall be cleaned and left free from defects. Units that are damaged or improperly installed shall be removed and new units provided as directed.

-- End of Section --

SECTION 09650

RESILIENT FLOORING

PART 1 GENERAL

1.1 REFERENCES

The publications listed below form a part of this specification to the extent referenced. The publications are referred to in the text by basic designation only.

AMERICAN SOCIETY FOR TESTING AND MATERIALS (ASTM)

ASTM D 4078	(1992; R 1996) Water Emulsion Floor Polish
ASTM E 648	(1997) Critical Radiant Flux of Floor-Covering Systems Using a Radiant Heat Energy Source
ASTM E 662	(1995) Specific Optical Density of Smoke Generated by Solid Materials
ASTM F 1066	(1995a) Vinyl Composition Floor Tile

1.2 FIRE RESISTANCE REQUIREMENTS

Flooring in corridors and exits shall have a minimum average critical radiant flux of 0.22 watts per square centimeter when tested in accordance with ASTM E 648. The smoke density rating shall be less than 450 when tested in accordance with ASTM E 662.

1.3 SUBMITTALS

Government approval is required for submittals with a "GA" designation; submittals having an "FIO" designation are for information only. The following shall be submitted in accordance with Section 01330 SUBMITTAL PROCEDURES:

SD-01 Data

Resilient Flooring and Accessories; GA.

Manufacturer's descriptive data and installation instructions including cleaning and maintenance instructions.

SD-09 Reports

Resilient Flooring and Accessories; GA.

Copies of test reports showing that representative product samples of the flooring proposed for use have been tested by an independent testing laboratory within the past three years or when formulation change occurred

and conforms to the requirements specified.

SD-14 Samples

Resilient Flooring and Accessories; GA.

Three samples of each indicated color and type of flooring and base. Sample size shall be minimum 60 x 100 mm (2-1/2 x 4 inches).

1.4 DELIVERY AND STORAGE

Materials shall be delivered to the building site in original unopened containers bearing the manufacturer's name, project identification, and handling instructions. Materials shall be stored in a clean dry area with temperature maintained above 21 degrees C (70 degrees F) for 2 days prior to installation, and shall be stacked according to manufacturer's recommendations. Materials shall be protected from the direct flow of heat from hot-air registers, radiators and other heating fixtures and appliances.

1.5 ENVIRONMENTAL REQUIREMENTS

Areas to receive resilient flooring shall be maintained at a temperature above 21 degrees C and below 38 degrees C for 2 days before application, during application and 2 days after application. A minimum temperature of 13 degrees C shall be maintained thereafter.

1.6 SCHEDULING

Resilient flooring application shall be scheduled after the completion of other work which would damage the finished surface of the flooring.

1.7 WARRANTY

Manufacturer's standard performance guarantees or warranties that extend beyond a one year period shall be provided.

1.8 EXTRA MATERIALS

Extra flooring material of each color and pattern shall be furnished at the rate of 5 tiles for each 1000 tiles. Extra materials shall be from the same lot as those installed. Extra base material composed of 6 m (20 linear feet) of each color shall be furnished.

PART 2 PRODUCTS

2.1 VINYL-COMPOSITION TILE TYPE

Vinyl-composition tile shall conform to ASTM F 1066, Class 2,(through pattern tile), Composition 1, asbestos-free, and shall be 300 mm (12 inches) square and 3.2 mm (1/8 inch) thick. Tile shall have the color and pattern uniformly distributed throughout the thickness of the tile. Flooring in any one continuous area shall be from the same lot and shall have the same shade and pattern.

2.2 NOT USED

2.3 NOT USED

2.4 NOT USED

2.5 NOT USED

2.6 RESILIENT BASE

Base shall be manufacturers standard rubber or vinyl, straight style (installed with carpet) coved style (installed with resilient flooring). Base shall be 100 mm (4 inches) high and a minimum 3 mm (1/8 inch) thick. Preformed outside corners shall be furnished.

2.7 NOT USED

2.8 NOT USED

2.9 TRANSITION STRIP

A vinyl or rubber transition strip tapered to meet abutting material shall be provided.

2.10 ADHESIVE

Adhesive for flooring and wall base shall be as recommended by the flooring manufacturer.

2.11 POLISH

Polish shall conform to ASTM D 4078.

2.12 CAULKING AND SEALANTS

Caulking and sealants shall be in accordance with Section 07900 JOINT SEALING.

2.13 MANUFACTURER'S COLOR AND TEXTURE

Color and texture shall be as indicated on the drawings.

PART 3 EXECUTION

3.1 EXAMINATION/VERIFICATION OF CONDITIONS

The Contractor shall examine and verify that site conditions are in agreement with the design package and shall report all conditions that will prevent a proper installation. The Contractor shall not take any corrective action without written permission from the Government.

3.2 SURFACE PREPARATION

Flooring shall be in a smooth, true, level plane, except where indicated as sloped. Before any work under this section is begun, all defects such as rough or scaling concrete, low spots, high spots, and uneven surfaces shall have been corrected, and all damaged portions of concrete slabs shall have been repaired as recommended by the flooring manufacturer. Concrete curing compounds, other than the type that does not adversely affect adhesion, shall be entirely removed from the slabs. Paint, varnish, oils, release agents, sealers, waxers, and adhesives shall be removed, as recommended by the flooring manufacturer.

3.3 MOISTURE TEST

The suitability of the concrete subfloor for receiving the resilient flooring with regard to moisture content shall be determined by a moisture test as recommended by the flooring manufacturer.

3.4 INSTALLATION OF VINYL-COMPOSITION TILE AND SOLID VINYL TILE

Tile flooring shall be installed with adhesive in accordance with the manufacturer's installation instructions. Tile lines and joints shall be kept square, symmetrical, tight, and even. Edge width shall vary as necessary to maintain full-size tiles in the field, but no edge tile shall be less than one-half the field tile size, except where irregular shaped rooms make it impossible. Flooring shall be cut to, and fitted around, all permanent fixtures, built-in furniture and cabinets, pipes, and outlets. Edge tile shall be cut, fitted, and scribed to walls and partitions after field flooring has been applied.

3.5 NOT USED

3.6 NOT USED

3.7 NOT USED

3.8 INSTALLATION OF RESILIENT BASE

Wall base shall be installed with adhesive in accordance with the manufacturer's written instructions. Base joints shall be tight and base shall be even with adjacent resilient flooring. Voids along the top edge of base at masonry walls shall be filled with caulk.

3.9 NOT USED

3.10 NOT USED

3.11 CLEANING

Immediately upon completion of installation of tile in a room or an area, flooring and adjacent surfaces shall be cleaned to remove all surplus adhesive. After installation, flooring shall be washed with a cleaning solution, rinsed thoroughly with clear cold water, and, except for raised pattern rubber flooring, rubber tile and sheet rubber flooring, rubber stair treads, and static control vinyl tile, given two coats of polish in accordance with manufacturers written instructions. After each polish coat, floors shall be buffed to an even luster with an electric polishing machine. Raised pattern rubber flooring, rubber tile and sheet rubber flooring, rubber stair treads, and static control vinyl tile shall be cleaned and maintained as recommended by the manufacturer.

3.12 PROTECTION

From the time of laying until acceptance, flooring shall be protected from damage as recommended by the flooring manufacturer. Flooring which becomes damaged, loose, broken, or curled shall be removed and replaced.

-- End of Section --

SECTION 09900

PAINTING, GENERAL

PART 1 GENERAL

1.1 REFERENCES

The publications listed below form a part of this specification to the extent referenced. The publications are referred to in the text by basic designation only.

AMERICAN CONFERENCE OF GOVERNMENTAL INDUSTRIAL HYGIENISTS (ACGIH)

ACGIH-02	(1996) Threshold Limit Values for Chemical Substances and Physical Agents and Biological Exposure Indices

AMERICAN SOCIETY FOR TESTING AND MATERIALS (ASTM)

ASTM C 150	(1996) Portland Cement
ASTM D 3273	(1994) Resistance to Growth of Mold on the Surface of Interior Coating in an Environmental Chamber
ASTM D 3274	(1995) Evaluating Degree of Surface Disfigurement of Paint Films by Microbial (Fungal or Algal) Growth or Soil and Dirt Accumulation
ASTM D 4214	(1989) Evaluating the Degree of Chalking of Exterior Paint Films
ASTM D 4258	(1988; R 1992) Surface Cleaning Concrete for Coating

COMMERCIAL ITEM DESCRIPTIONS (CID)

CID A-A-1500	(Rev A) Sealer, Surface (Latex Block Filler)
CID A-A-2246	(Rev A) Paint, Latex (Gloss, Interior)
CID A-A-2247	(Basic) Paint, Latex (Semigloss, Interior)
CID A-A-2248	(Basic) Paint, Latex, (Flat, Interior)
CID A-A-2336	(Rev A) Primer Coating (Alkyd, Exterior Wood, White and Tints)
CID A-A-2867	(Basic) Coating, Polyurethane, Single Component Moisture Cure, Alipathic
CID A-A-2962	(Basic) Enamel, Alkyd
CID A-A-2994	(Basic) Primer Coating, Interior, for Walls

and Wood

FEDERAL SPECIFICATIONS (FS)

FS TT-E-2784	(Rev A) Enamel (Acrylic-Emulsion, Exterior Gloss and Semigloss) (Metric)

STEEL STRUCTURES PAINTING COUNCIL (SSPC)

SSPC Paint 5	(1995) Zinc Dust, Zinc Oxide and Phenolic Varnish Paint
SSPC Paint 23	(1982) Latex Primer for Steel surfaces
SSPC SP 1	(1982) Solvent Cleaning
SSPC SP 2	(1995) Hand Tool Cleaning
SSPC SP 3	(1995) Power Tool Cleaning
SSPC SP 7	(1994) Brush-Off Blast Cleaning

1.2 SUBMITTALS

Government approval is required for submittals with a "GA" designation; submittals having an "FIO" designation are for information only. The following shall be submitted in accordance with Section 01330 SUBMITTAL PROCEDURES:

SD-01 Data

Paint; GA.

The names, quantity represented, and intended use for the proprietary brands of materials proposed to be substituted for the specified materials regardless of quantities in states where VOC content limitations apply.

SD-06 Instructions

Mixing and Thinning; FIO. Application; FIO.

Manufacturer's current printed product description, material safety data sheets (MSDS) and technical data sheets for each coating system. Detailed mixing, thinning and application instructions, minimum and maximum application temperature, and curing and drying times between coats for epoxy, moisture-curing polyurethane, and liquid glaze coatings. Detailed application instructions for textured coatings shall be provided.

SD-09 Reports

Paint; GA.

A statement as to the quantity represented and the intended use, plus the following test report for batches in excess of 200 L:

a. A test report showing that the proposed batch to be used meets specified requirements:

b. A test report showing that a previous batch of the same formulation as the batch to be used met specified requirements, plus, on the proposed batch to be used, a report of test results for properties of weight per liter, viscosity, fineness of grind, drying time, color, and gloss.

SD-13 Certificates

Lead; GA. Mildewcide and Insecticide; GA. Volatile Organic Compound (VOC) Content; GA.

Certificate stating that paints for interior use contain no mercurial mildewcide or insecticide. Certificate stating that paints proposed for use contain not more than 0.06 percent lead by weight of the total nonvolatile. Certificate stating that paints proposed for use meet Federal VOC regulations and those of the of the local Air Pollution Control Districts having jurisdiction over the geographical area in which the project is located.

SD-14 Samples

Paint; GA.

While the material is at the site or source of supply, and at a time agreeable to the Contractor and the Contracting Officer, a 1 liter (1 quart) sample of each color and batch, except for quantities of 200 liters (50 gallons) or less, shall be taken by random selection from the sealed containers by the Contractor in the presence of a representative of the Contracting Officer. The contents of the containers to be sampled shall be thoroughly mixed to ensure that the sample is representative. Samples shall be identified by designated name, specification number, manufacturer name and address, batch number, project contract number, intended use, and quantity involved.

1.3 PACKAGING, LABELING, AND STORING

Paints shall be in sealed containers that legibly show the designated name, formula or specification number, batch number, color, quantity, date of manufacture, manufacturer's formulation number, manufacturer's directions including any warnings and special precautions, and name of manufacturer. Pigmented paints shall be furnished in containers not larger than 20 liters.

Paints and thinner shall be stored in accordance with the manufacturer's written directions and as a minimum stored off the ground, under cover, with sufficient ventilation to prevent the buildup of flammable vapors and at temperatures between 4 and 35 degrees C. Paints shall be stored on the project site or segregated at the source of supply sufficiently in advance of need to allow 30 days for testing.

1.4 APPROVAL OF MATERIALS

When samples are tested, approval of materials will be based on tests of the samples; otherwise, materials will be approved based on test reports furnished with them. If materials are approved based on test reports furnished, samples will be retained by the Government for testing should the materials appear defective during or after application. In addition to any other remedies under the contract the cost of retesting defective

materials will be at the Contractor's expense.

1.5 ENVIRONMENTAL CONDITIONS

Unless otherwise recommended by the paint manufacturer, the ambient temperature shall be between 7 and 35 degrees C (45 and 95 degrees F) when applying coatings other than water-thinned, epoxy, and moisture-curing polyurethane coatings. Water-thinned coatings shall be applied only when ambient temperature is between 10 and 32 degrees C. (50 and 90 degrees F). Epoxy, and moisture-curing polyurethane coatings shall be applied only within the minimum and maximum temperatures recommended by the coating manufacturer. Moisture-curing polyurethane shall not be applied when the relative humidity is below 30 percent.

1.6 SAFETY AND HEALTH

Work shall comply with applicable Federal, State, and local laws and regulations, and with the ACCIDENT PREVENTION PLAN, including the Activity Hazard Analysis as specified in the CONTRACT CLAUSES. The Activity Hazard Analysis shall include analyses of the potential impact of painting operations on painting personnel and on others involved in and adjacent to the work zone.

1.6.1 Worker Exposures

Exposure of workers to hazardous chemical substances shall not exceed limits established by ACGIH-02, or as required by a more stringent applicable regulation.

1.6.2 Toxic Compounds

Toxic products having ineffective physiological warning properties, such as no or low odor or irritation levels, shall not be used unless approved by the Contracting Officer.

1.6.3 Training

Workers having access to an affected work area shall be informed of the contents of the applicable material data safety sheets (MDSS) and shall be informed of potential health and safety hazard and protective controls associated with materials used on the project. An affected work area is one which may receive mists and odors from the painting operations. Workers involved in preparation, painting and clean-up shall be trained in the safe handling and application, and the exposure limit, for each material which the worker will use in the project. Personnel having a need to use respirators and masks shall be instructed in the use and maintenance of such equipment.

1.6.4 Coordination

Work shall be coordinated to minimize exposure of building occupants, other Contractor personnel, and visitors to mists and odors from preparation, painting and clean-up operations.

PART 2 PRODUCTS

2.1 PAINT

The term "paint" as used herein includes emulsions, enamels, paints,

stains, varnishes, sealers, cement-emulsion filler, and other coatings, whether used as prime, intermediate, or finish coat. Paint shall conform to the requirements listed in the painting schedules at the end of this section, except when the required amount of a material of a particular batch is 200 liters or less, an approved first-line proprietary paint material with similar intended formulation, usage and color to that specified may be used. Additional requirements are as follows:

2.1.1 Colors and Tints

Colors shall be as selected from manufacturer's standard colors, as indicated. Manufacturer's standard color is for identification of color only. Tinting of epoxy and urethane paints shall be done by the manufacturer. Stains shall conform in shade to manufacturer's standard color. The color of the undercoats shall vary slightly from the color of the next coat.

2.1.2 Mildewcide and Insecticide

Paint specified for all coats applied to fabrics and vapor barrier jackets over insulation and surfaces in Mechanical, Mens, and Womens Restroom areas shall contain a mildewcide that will not adversely affect the color, texture, or durability of the coating. The mildewcide shall be incorporated into the paint by the manufacturer and shall attain a surface disfigurement rating of 8 or greater when tested in accordance with ASTM D 3273 and evaluated in accordance with ASTM D 3274. Mercurial mildewcide shall not be used in interior paint. Insecticides shall not be used in paint.

2.1.3 Lead

Paints containing lead in excess of 0.06 percent by weight of the total nonvolatile content (calculated as lead metal) shall not be used.

2.1.4 Chromium

Paints containing zinc chromate or strontium chromate pigments shall not be used.

2.1.5 Volatile Organic Compound (VOC) Content

Paints shall comply with applicable federal, state and local laws enacted to insure compliance with Federal Clean Air Standards and shall conform to the restrictions of the local air pollution control authority.

PART 3 EXECUTION

3.1 PROTECTION OF AREAS NOT TO BE PAINTED

Items not to be painted which are in contact with or adjacent to painted surfaces shall be removed or protected prior to surface preparation and painting operations. Items removed prior to painting shall be replaced when painting is completed. Following completion of painting, workmen skilled in the trades involved shall reinstall removed items. Surfaces contaminated by coating materials shall be restored to original condition.

3.2 SURFACE PREPARATION

Surfaces to be painted shall be clean and free of foreign matter before

application of paint or surface treatments. Oil and grease shall be removed prior to mechanical cleaning. Cleaning shall be programmed so that dust and other contaminants will not fall on wet, newly painted surfaces. Exposed ferrous metals such as nail heads on or in contact with surfaces to be painted with water-thinned paints, shall be spot-primmed with a suitable corrosion-inhibitive primer capable of preventing flash rusting and compatible with the coating specified for the adjacent areas.

3.2.1 Concrete and Masonry Surfaces

Concrete and masonry surfaces shall be allowed to dry at least 30 days before painting, except concrete slab on grade which shall be allowed to cure 90 days before painting. Surfaces shall be cleaned in accordance with ASTM D 4258. Glaze, efflorescence, laitance, dirt, grease, oil, asphalt, surface deposits of free iron and other foreign matter shall be removed prior to painting. Surfaces to receive polyurethane or epoxy coatings shall be acid-etched or mechanically abraded as specified by the coating manufacturer, rinsed with water, allowed to dry, and treated with the manufacturer's recommended conditioner prior to application of the first coat.

3.2.2 Ferrous Surfaces

Ferrous surfaces including those that have been shop-coated, shall be solvent-cleaned or detergent-washed in accordance with SSPC SP 1. Surfaces that contain loose rust, loose mill scale, and other foreign substances shall be cleaned mechanically with hand tools according to SSPC SP 2, power tools according to SSPC SP 3 or by sandblasting according to SSPC SP 7. Shop-coated ferrous surfaces shall be protected from corrosion by treating and touching up corroded areas immediately upon detection.

3.2.3 Nonferrous Metallic Surfaces

Galvanized, aluminum and aluminum-alloy, lead, copper, and other nonferrous metal surfaces shall be solvent-cleaned or detergent-washed in accordance with SSPC SP 1.

3.2.4 Gypsum Board Surfaces

Gypsum board surfaces shall be dry and shall have all loose dirt and dust removed by brushing with a soft brush, rubbing with a cloth, or vacuum-cleaning prior to application of the first-coat material. A damp cloth or sponge may be used if paint will be water-based.

3.2.5 Mastic-Type Surfaces

Mastic-type surfaces shall be prepared by removing foreign material.

3.2.6 NOT USED

3.2.7 NOT USED

3.2.8 Previously Painted Surfaces

Previously painted surfaces damaged during construction shall be thoroughly cleaned of all grease, dirt, dust or other foreign matter. Blistering, cracking, flaking and peeling or other deteriorated coatings shall be removed. Slick surfaces shall be roughened. Damaged areas such as, but not limited to, nail holes, cracks, chips, and spalls shall be repaired with

suitable material to match adjacent undamaged areas. Edges of chipped paint shall be feather edged and sanded smooth. Rusty metal surfaces shall be cleaned as per SSPC requirements. Solvent, mechanical, or chemical cleaning methods shall be used to provide surfaces suitable for painting. Chalk shall be removed so that when tested in accordance with ASTM D 4214, the chalk resistance rating is no less than 8. New, proposed coatings shall be compatible with existing coatings. If existing surfaces are glossy, the gloss shall be reduced.

3.3 MIXING AND THINNING

When thinning is approved as necessary to suit surface, temperature, weather conditions, or application methods, paints may be thinned in accordance with the manufacturer's directions. When thinning is allowed, paints shall be thinned immediately prior to application with not more than 0.125 L of suitable thinner per liter. The use of thinner shall not relieve the Contractor from obtaining complete hiding, full film thickness, or required gloss. Thinning shall not cause the paint to exceed limits on volatile organic compounds. Paints of different manufacturers shall not be mixed.

3.3.1 Cement-Emulsion Filler Coat

Cement and aggregate shall be dry-mixed so that uniform distribution and intermixing are obtained. Mixing liquid and one-half of the total amount of water shall be premixed and added gradually to the white portland cement and aggregate with constant stirring until a thick, smooth material is obtained. Emulsion paint shall then be added to the mixture and stirred until uniformity is obtained. The blend shall have a thick, creamy consistency. The remainder of the water shall be added if necessary to obtain a material with adequate application properties. Blending resin emulsion or emulsion paint with any other component shall be done with caution; too rapid an agitation will cause air entrapment and foaming.

3.4 APPLICATION

Painting practices shall comply with applicable federal, state and local laws enacted to insure compliance with Federal Clean Air Standards. Unless otherwise specified or recommended by the paint manufacturer, paint may be applied by brush, roller, or spray. At the time of application, paint shall show no signs of deterioration. Uniform suspension of pigments shall be maintained during application. Each coat of paint shall be applied so dry film shall be of uniform thickness and free from runs, drops, ridges, waves, pinholes or other voids, laps, brush marks, and variations in color, texture, and finish. Hiding shall be complete. Rollers for applying paints and enamels shall be of a type designed for the coating to be applied and the surface to be coated. Special attention shall be given to insure that all edges, corners, crevices, welds, and rivets receive a film thickness equal to that of adjacent painted surfaces. Paints, except water-thinned types, shall be applied only to surfaces that are completely free of moisture as determined by sight or touch.

3.4.1 Ventilation

Affected areas shall be ventilated during paint application so that workers exposure to chemical substances shall not exceed limits as established by ACGIH-02, or as required by a more stringent applicable regulation. Interior work zones having a volume of 280 cubic meters (10,000 cubic feet) or less shall be ventilated at a minimum of 2 air exchanges per hour.

Ventilation in larger work zones shall be maintained by means of mechanical exhaust. Solvent vapors shall be exhausted outdoors, away from air intakes and workers. Return air inlets in the work zone shall be temporarily sealed before start of work until the coatings have dried.

3.4.2 Respirators

Operators and personnel in the vicinity of operating paint sprayers shall wear respirators.

3.4.3 First Coat

The first coat on plaster, gypsum wallboard, and other surfaces shall include repeated touching up of suction spots or overall application of primer or sealer to produce uniform color and gloss. Excess sealer shall be wiped off after each application. The first coat on both faces of wood doors shall be applied at essentially the same time. Glazed doors and sashes shall be given the specified coating system within 3 weeks of the time they are glazed, but not before the glazing material has set; paint shall overlay glass about 1.78 mm (70 mils) all around. Each varnish coat shall be sanded lightly prior to application of subsequent coats.

3.4.4 Timing

Surfaces that have been cleaned, pretreated, and otherwise prepared for painting shall be given a coat of the specified first coat as soon as practical after such pretreatment has been completed, but prior to any deterioration of the prepared surface. Sufficient time shall elapse between successive coats to permit proper drying. This period shall be modified as necessary to suit weather conditions. Oil-based or oleoresinous solvent-type paints shall be considered dry for recoating when the paint feels firm, does not deform or feel sticky under moderate pressure of the thumb, and the application of another coat of paint does not cause the undercoat to lift or lose adhesion. Manufacturer's instructions for application, curing and drying time between coats of two-component systems shall be followed.

3.4.5 NOT USED

3.4.6 Fillers

Concrete and masonry surface voids shall be filled; however, surface irregularities need not be completely filled. The dried filler shall be uniform and free of pinholes. Filler shall not be applied over caulking compound.

3.4.6.1 Cement-Emulsion Filler

Immediately before filler application, surfaces shall be dampened uniformly and thoroughly, with no free surface water visible, by several applications of potable water with a fog spray, allowing time between the sprayings for water to be absorbed. Cement-emulsion filler shall be scrubbed into the surface vigorously with a stiff-bristled brush having tampico or palmyra bristles not longer than 63 mm (2-1/2 inches). At least 24 hours shall elapse before applying exterior emulsion paint over cement-emulsion filler. When the ambient temperature is over 29 degrees C, (85 degrees F), cement-emulsion filler surfaces shall be dampened lightly with a fog spray of potable water immediately prior to application of the subsequent paint coat.

3.4.6.2 Latex Filler

Latex filler, CID A-A-1500, shall be applied according to the manufacturer's instructions. Surface voids shall be filled and excess filler shall be removed from the surface with a rubber squeegee. The filler shall be allowed to dry the length of time specified by the manufacturer prior to applying successive coats of paint.

3.4.7 NOT USED

3.4.8 Ferrous-Metal Primer

Primer for ferrous-metal shall be applied to ferrous surfaces to receive paint other than asphalt varnish prior to deterioration of the prepared surface. The semitransparent film applied to some pipes and tubing at the mill is not to be considered a shop coat, but shall be overcoated with the specified ferrous-metal primer prior to application of finish coats.

3.5 PIPE COLOR CODE MARKING

Pipes in exposed areas and in accessible pipe spaces shall be provided with color band and titles adjacent to all valves, except those provided at plumbing fixtures, at not more than 12 meter spacing on straight pipe runs, adjacent to change in direction, and on both sides where pipes pass through walls or floors. Color code marking shall be of the color listed in TABLE I and the size listed in TABLE II. The arrows shall be installed adjacent to each band to indicate the direction of flow in the pipe. The legends shall be printed in upper-case black letters as listed in TABLE I. Letter sizes shall be as listed in TABLE II. Marking shall be painted or applied using colored, pressure-sensitive adhesive markers of standard manufacture. Paint shall be as specified for insulated and uninsulated piping.

TABLE I. COLOR CODES FOR MARKING PIPE

Material	Band	Letters and Arrow*	Legend
Cold water (potable)	Green	White	POTABLE WATER
Fire protection water	Red	White	FIRE PR. WATER
Hot water (domestic)	Green	White	H.W.
Hot water recirculating (domestic)	Green	White	H.W.R.
High temp. water supply	Yellow	Black	H.T.W.S.
High temp. water return	Yellow	Black	H.T.W.R.
Boiler feed water	Yellow	Black	B.F.
Low temp. water supply (heating)	Yellow	Black	L.T.W.S.
Low temp. water return (heating)	Yellow	Black	L.T.W.R.
Condenser water supply	Green	White	COND. W.S.
Condenser water return	Green	White	COND. W.R.
Chilled water supply	Green	White	C.H.W.S.
Chilled water return	Green	White	C.H.W.R.
Treated water	Yellow	Black	TR. WATER
Chemical feed	Yellow	Black	CH. FEED
Compressed air	Yellow	Black	COMP. AIR
Natural gas	Blue	White	NAT. GAS
Freon	Blue	White	FREON
Fuel oil	Yellow	Black	FUEL OIL

TABLE I. COLOR CODES FOR MARKING PIPE

Material	Band	Letters and Arrow*	Legend
Steam	Yellow	Black	STM.
Condensate	Yellow	Black	COND.

TABLE II. COLOR CODE MARKING SIZES

Outside Diameter of Pipe Covering (mm)	Width of Color Band (mm)	Arrow Length x Width (mm)	Size of Legend Letters and Numerals (mm)
Less than 38	200	200 x 57	13
38 to 60	200	200 x 57	19
60 to 150	300	200 x 57	31
200 to 225	600	300 x 110	63
Over 250	800	300 x 115	88

3.6 MISCELLANEOUS PAINTING

3.6.1 Lettering

Lettering shall be provided as scheduled on the drawings, shall be Gothic type, and shall be [black enamel] [water-type decalcomania, finished with a protective coating of spar varnish]. Samples shall be approved before application.

3.7 SURFACES TO BE PAINTED

Surfaces listed in the painting schedules at the end of this section, other than those listed in paragraph SURFACES NOT TO BE PAINTED, shall be painted as scheduled.

3.8 SURFACES NOT TO BE PAINTED

Surfaces of hardware, fittings, and other factory finished items shall not be painted.

3.9 CLEANING

Cloths, cotton waste and other debris that might constitute a fire hazard shall be placed in closed metal containers and removed at the end of each day. Upon completion of the work, staging, scaffolding, and containers shall be removed from the site or destroyed in an approved manner. Paint and other deposits on adjacent surfaces shall be removed and the entire job left clean and acceptable.

3.10 PAINTING SCHEDULES

The following painting schedules identify the surfaces to be painted and prescribe the paint to be used and the number of coats of paint to be applied. Contractor options are indicated by ------or------ between optional systems or coats.

EXTERIOR PAINTING SCHEDULE

Surface	First Coat	Second Coat	Third Coat
Concrete masonry units.	Cement-emulsion filler	FS TT-E-2784 Type III	None

NOTE: Cement-emulsion filler coat shall be acrylic-based and shall consist of the following ingredients in the proportion stated: white portland cement, ASTM C 150, Type I, 7.5 kg; aggregate 15 kg; mixing liquid, factory-prepared acrylic containing 46 to 47 percent solids, 3 liters; potable water 4 liters maximum; exterior emulsion paint, FS TT-E-2784 Type III 4 liters. Aggregate shall consist of Washed silica sand of the following gradation:

U.S. Sieve Size	Percent Sand (by Weight) Passing Individual Sieve
0.850 mm (20)	100
0.600 mm (30)	95 - 100
0.300 mm (50)	30 - 65
0.150 mm (100)	0 - 10
0.075 mm (200)	0 - 1

Concrete, unless otherwise specified.	FS TT-E-2784 Type III	FS TT-E-2784 Type III	None
Wood, unless otherwise specified.	CID A-A-2336	FS TT-E-2784 Type II	FS TT-E-2784 Type II
	FS TT-E-2784 Type III	FS TT-E-2784 Type II	FS TT-E-2784 Type II
Ferrous metal unless otherwise specified	SSPC Paint 5	CID A-A-2962 Type I Class II Grade C	CID A-A-2962 Type 1 ClassII Grade C
Galvanized metal.	FS TT-E-2784 Type III	FS TT-E-2784 Type II	FS TT-E-2784 Type II
Aluminum aluminum-alloy, and other non-ferrous metal (non-galvanized)	FS TT-E-2784 Type III	FS TT-E-2784 Type II	FS TT-E-2784 Type II

INTERIOR PAINTING SCHEDULE

Surface	First Coat	Second Coat	Third Coat
Plaster, gypsum board, concrete, and concrete masonry units not requiring a smooth finish, unless otherwise specified.	CID A-A-2994 Type II	CID A-A-2246 ----------or---------- ----------or----------	None
Concrete masonry units requiring a smooth finish	CID A-A-1500	CID A-A-2994 Type II	CID A-A-2246 -----or-----
Concrete masonry units: in, shower areas, and areas requiring a high degree of sanitation, unless otherwise specified.	CID A-A-1500	CID A-A-2994 Type II	FS TT-E-2784 Type II
Plaster and gypsum board: in shower areas, and areas requiring a high degree of sanitation, unless otherwise specified.	CID A-A-2994 Type II	FS TT-E-2784 Type II	None
Concrete masonry units, plaster, and gypsum board: for walls in heavy traffic areas in space as follows:	CID A-A-1500	CID A-A-2994 Type II	CID A-A-2246 -----or------
Ferrous Metal unless otherwise specified	SSPC Paint 23	FS TT-E-2784 Type II	FS TT-E-2784 Type II

Aluminum and aluminum alloy unless otherwise specified.	CID A-A-2867	CID A-A-2867	None
Ferrous metal factory-primed mechanical and electrical equipment.	Two coats of paint as recommended by the equipment manufacturer		None
Galvanized metal:	SSPC Paint 23	FS TT-E-2784 Type II	FS TT-E-2784 Type II
Wood: unless otherwise specified.	CID A-A-2994 Type I	CID A-A-2246	None
Ferrous Metal: Convector enclosures, electrical conduit runs: metallic tubing uninsulated ducts and pipes, pipe hangers, louvers, grilles, and air outlets, in areas having painted adjacent surfaces.	SSPC Paint 23	None	None
Aluminum and Galvanized Surface Metal: Convector enclosures, electrical conduit runs metallic tubing uninsulated ducts and pipes, pipe hangers, louvers, grilles, and air outlets, in areas having painted adjacent surfaces.	FS TT-E-2784	CID A-A-2246 ----------or---------- CID A-A-2247 ----------or---------- CID A-A-2248	CID A-A-2246 ----------or---------- CID A-A-2247 ----------or---------- CID A-A-2248

Facing of vapor barrier jackets of presized or adhesive finished cloth cover insulation on pipes, ducts,	Two coats of paint to match adjacent areas	None

-- End of Section --

SECTION 10100

VISUAL COMMUNICATIONS SPECIALTIES

PART 1 GENERAL

1.1 REFERENCES

The publications listed below form a part of this specification to the extent referenced. The publications are referred to in the text by basic designation only.

AMERICAN SOCIETY FOR TESTING AND MATERIALS (ASTM)

ASTM B 221	(1995a) Aluminum and Aluminum-Alloy Extruded Bars, Rods, Wire, Shapes, and Tubes
ASTM E 84	(1995) Surface Burning Characteristics of Building Materials

1.2 GENERAL REQUIREMENTS

The term visual display board when used herein includes visual aid board units, marker boards, tackboards, board cases, display track system and horizontal sliding units. Visual display boards shall be from manufacturer's standard product line.

1.3 SUBMITTALS

Government approval is required for submittals with a "GA" designation; submittals having an "FIO" designation are for information only. The following shall be submitted in accordance with Section 01330 SUBMITTAL PROCEDURES:

SD-01 Data

Visual Display Boards; GA.

Manufacturer's descriptive data and catalog cuts.

SD-06 Instructions

Visual Display Boards; FIO.

Manufacturer's installation instructions, and cleaning and maintenance instructions.

SD-13 Certificates

Visual Display Boards; FIO.

Certificate of compliance signed by Contractor attesting that visual display boards conform to the requirements specified.

SD-14 Samples

Aluminum; GA.

Sections of frame, map rail, and chalktray, and two map hooks.

Porcelain Enamel; GA.

Section showing porcelain enamel coating, steel, core material and backing.

Materials; GA.

Section of core material showing the lamination of colored cork, natural cork, woven fabric, non-woven fabric, and vinyl wall covering. Sample of hardwood and plastic laminate finish, and glass type. Samples shall be minimum 100 by 100 mm (4 by 4 inches) and show range of color.

1.4 DELIVERY, STORAGE AND HANDLING

Materials shall be delivered to the building site in the manufacturer's original unopened containers and shall be stored in a clean dry area with temperature maintained above 10 degrees C (50 degrees F). Materials shall be stacked according to manufacturer's recommendations. Visual display boards shall be allowed to acclimate to the building temperature for 24 hours prior to installation.

1.5 WARRANTY

Manufacturer's standard performance guarantees or warranties that extend beyond a one year period shall be provided.

PART 2 PRODUCTS

2.1 COLOR

Finish colors for required items shall be as specified in the drawings.

2.2 MATERIALS

2.2.1 Porcelain Enamel

Marker board writing surface shall be composed of porcelain enamel fused to a nominal 0.378 mm (0.0149 inches) (28 gauge) thick steel, laminated to a minimum 6 mm thick core material with a steel or foil backing sheet. Writing surface shall be capable of supporting paper by means of magnets. Marker board surface for display track system may be a powder paint dry erase surface adhered to a nominal 1.214 mm (0.0478 inches) (18 gauge) thick steel.

2.2.2 NOT USED

2.2.3 Woven Fabric

Fabric shall be plain weave. Fiber content shall be 100 percent polyester. Minimum total weight shall be 496 grams plus or minus 14 grams per linear meter (16 oz. plus or minus 0.5 oz. per linear yard). Fabric shall have a Class A flame spread rating of 0-50 and smoke development rating of 0-450 in accordance with ASTM E 84.

2.2.4 Non-Woven Fabric

Fabric shall be non-woven and hooktape compatible. Fiber content shall be 100 percent polyester, 100 percent polyolefin or 100 percent nylon backed. Minimum total weight shall be [340 grams plus or minus 14 grams per linear meter (11 oz. plus or minus 0.5 oz. per linear yard) for 1524 mm (60 inch) wide fabric] [_____]. Fabric shall have a Class A flame spread rating of 0-50 and smoke development rating of 0-450 in accordance with ASTM E 84.

2.2.5 NOT USED

2.2.6 Aluminum

Aluminum frame extrusions shall be alloy 6063-T5 or 6063-T6, conform to ASTM B 221, and be a minimum 1.5 mm (0.06 inches) thick. Exposed aluminum shall have an anodized, satin finish. Straight, single lengths shall be used wherever possible. Joints shall be kept to a minimum. Corners shall be mitered and shall have a hairline closure.

2.3 NOT USED

2.4 MARKERBOARD

Markerboard shall have a porcelain enamel writing surface and a chalktray. Markerboard shall be a factory assembled unit complete in one piece, without joints whenever possible. When markerboard dimensions require delivery in separate sections, components shall be prefit at the factory, disassembled for delivery and jointed at the site. Frame shall be aluminum. Chalktray shall be the same material as the frame and extend the full length of the liquid markerboard. The markerboard [shall not include a map rail] [shall have a map rail. The map rail with a tackable insert shall extend the full length of the liquid chalkboard, and shall have map hooks with clips for holding sheets of paper. Two map hooks shall be provided for each 1220 mm of map rail.] Dry erase markings shall be removable with a felt eraser or dry cloth without ghosting. Each unit shall come complete with an eraser and four different color compatible dry erase markers. The size shall be as shown in the drawings.

2.5 TACKBOARDS

2.5.1 NOT USED

2.5.2 Vinyl Covered

Tackboard shall have a vinyl wall covering laminated to a minimum 6 mm thick cork laminated to a minimum 6 mm thick hardboard or particleboard, and shall have an aluminum frame. The size shall be as shown in the drawings.

2.5.3 Fabric Covered

Tackboard shall have a woven or non-woven fabric covering laminated to a minimum 6 mm thick cork laminated to a minimum 6 mm thick hardboard or particleboard, and shall have an aluminum frame. The size shall be as shown on the drawings.

PART 3 EXECUTION

3.1 PLACEMENT SCHEDULE

[Location and mounting height of visual display boards shall be as shown on

the drawings.] [Visual display boards shall be provided as follows:

Room Name and Number	Board Type	Board Size	Wall Location	Mounting Height
[_____]	[_____]	[_____]	[_____]	[_____]]

Mounting height is defined as distance from finished floor to top of the display board frame.

3.2 INSTALLATION

Installation and assembly shall be in accordance with manufacturer's printed instructions. Concealed fasteners shall be used. Visual display boards shall be attached to the walls with suitable devices to anchor each unit. The Contractor shall furnish and install trim items, accessories and miscellaneous items in total, including but not limited to hardware, grounds, clips, backing materials, adhesives, brackets, and anchorages incidental to or necessary for a sound, secure, complete and finished installation. Installation shall not be initiated until completion of room painting and finishing operations. Visual display boards shall be installed in locations and at mounting heights indicated. Visual display boards shall be installed level and plumb, and if applicable doors shall be aligned and hardware shall be adjusted. Damaged units shall be repaired or replaced by the Contractor as directed by the Contracting Officer.

3.3 CLEANING

Writing surfaces shall be cleaned in accordance with manufacturer's instructions.

-- End of Section --

SECTION 10160

TOILET PARTITIONS

PART 1 GENERAL

1.1 REFERENCES

The publications listed below form a part of this specification to the extent referenced. The publications are referred to in the text by basic designation only.

COMMERCIAL ITEM DESCRIPTIONS (CID)

CID A-A-60003 Partitions, Toilet, Complete

1.2 SYSTEM DESCRIPTION

Toilet partition system, including toilet enclosures, room entrance screens, and urinal screens, shall be a complete and usable system of panels, hardware, and support components. The partition system shall be provided by a single manufacturer and shall be a standard product as shown in the most recent catalog data. The partition system shall be as shown.

1.3 SUBMITTALS

Government approval is required for submittals with a "GA" designation; submittals having an "FIO" designation are for information only. The following shall be submitted in accordance with Section 01330 SUBMITTAL PROCEDURES:

SD-01 Data

Toilet Partition System; GA.

Manufacturer's technical data and catalog cuts including installation and cleaning instructions.

SD-04 Drawings

Toilet Partition System; GA.

Drawings showing plans, elevations, details of construction, hardware, reinforcing, fittings, mountings, and anchorings.

SD-14 Samples

Toilet Partition System; GA.

Manufacturer's standard color charts and color samples.

1.4 DELIVERY, STORAGE, AND HANDLING

Components shall be delivered to the jobsite in the manufacturer's original packaging with the brand, item identification, and project reference

clearly marked. Components shall be stored in a dry location that is adequately ventilated; free from dust, water, or other contaminants; and shall have easy access for inspection and handling.

1.5 WARRANTY

Manufacturer's standard performance guarantees or warranties that extend beyond a 1 year period shall be provided.

PART 2 PRODUCTS

2.1 TOILET ENCLOSURES

Toilet enclosures shall conform to CID A-A-60003, Type I, Style A, floor supported. Width, length, and height of toilet enclosures shall be as shown. Finish surface of panels shall be painted metal, Finish 1. Panels indicated to receive toilet paper holders or grab bars as specified in Section 10800 TOILET ACCESSORIES, shall be prepared for mounting of the items required. Grab bars shall withstand a bending stress, shear stress, shear force, and a tensile force induced by 1112 N (250 lbf). Grab bars shall not rotate within their fittings.

2.2 NOT USED

2.3 URINAL SCREENS

Urinal screens shall conform to CID A-A-60003, Type III, Style A, floor supported. Finish surface of screens shall be painted metal, Finish 1. Width and height of urinal screens shall be as shown.

2.4 HARDWARE

Hardware for the toilet partition system shall conform to CID A-A-60003 for the specified type and style of partitions. Hardware finish shall be highly resistant to alkalies, urine, and other common toilet room acids.

2.5 COLORS

Color of finishes for toilet partition system components shall be manufacturer's standard as shown on the drawings.

PART 3 EXECUTION

3.1 INSTALLATION

Toilet partitions shall be installed straight and plumb in accordance with approved manufacturer's instructions with horizontal lines level and rigidly anchored to the supporting construction. Anchorage to walls shall be by through-bolting. Drilling and cutting for installation of anchors shall be at locations that will be concealed in the finished work.

3.2 ADJUSTING AND CLEANING

Doors shall have a uniform vertical edge clearance of approximately 5 mm (3/16 inch) and shall rest open at approximately 30 degrees when unlatched. Baked enamel finish shall be touched up with the same color of paint that was used for the finish. Toilet partitions shall be cleaned in accordance with approved manufacturer's instructions and shall be protected from damage until accepted.

-- End of Section --

SECTION 10211

FIXED METAL WALL LOUVERS

PART 1 GENERAL

1.1 SECTION INCLUDES

A. Fixed louvers and frames.

B. Insect screening.

1.2 RELATED SECTIONS

A. Section 07600 - Sheet Metal Work, General.

B. Section 07900 - Joint Sealers.

C. Section 15895 - Air Supply Distribution, Ventilation, and Exhaust System.

1.3 REFERENCES

A. AMCA 500 (Air Movement Control Association) - Test Method for Louvers, Dampers, and Shutters.

B. ASTM A167 - Stainless and Heat-Resisting Chromium-Nickel Steel Plate.

C. ASTM A526 - Steel Sheet, Zinc-Coated (Galvanized) by the Hot-Dip Process, Commercial Quality.

D. ASTM A527 - Sheet Steel, Zinc-Coated (Galvanized) by the Hot-Dip Process, Lock-Forming Quality.

E. ASTM B209 - Aluminum-Alloy Sheet and Plate.

F. ASTM B221 - Aluminum-Alloy Extruded Bars, Rods, Wire, Shapes, and Tubes.

1.4 PERFORMANCE REQUIREMENTS

A. Louver: As indicated on the louver schedule.

1.5 SUBMITTALS: Submit under provisions of Section 01300.

A. Shop Drawings: Indicate louver layout plan and elevations, opening and clearance dimensions, tolerances; head, jamb and sill details; blade configuration, screens, blankout areas required, and frames.

B. Product Data: Provide data describing design characteristics, maximum recommended air velocity, design free area, materials and finishes.

C. Samples: Submit two samples 8 x 8 inch (203 x 203 mm) in size illustrating finish and color of exterior and interior surfaces.

D. Manufacturer's Certificate: Certify that Products meet or exceed specified requirements

1.6 QUALITY ASSURANCE

A. Perform Work in accordance with AMCA Certification for intake/exhaust louvers.

1.7 QUALIFICATIONS

A. Manufacturer: Company specializing in manufacturing Products specified in this section with minimum three years documented experience.

1.8 FIELD MEASUREMENTS

A. Verify that field measurements are as indicated on shop drawings.

1.9 COORDINATION

A. Coordinate the Work with installation of masonry flashings.

1.10 WARRANTY

A. Provide twenty year warranty.

B. Warranty: Include coverage for degradation of polyvinylidene fluoride.

PART 2 PRODUCTS

2.1 MATERIALS

A. Aluminum: ASTM B221, 6063-T5 alloy, temper; extruded shape; prefinished with shop applied flouropolymer finish.

2.2 SCREENS

A. Insect Screen: Aluminum mesh, set in aluminum frame.

2.3 ACCESSORIES

A. Fasteners and Anchors: Stainless steel type.

B. Flashings: Of same material as louver frame. Sheet aluminum.

C. Sealants: Exterior type specified in Section 07900.

2.4 FABRICATION

A. Louver Panel Thickness: As indicated on louver schedule.

B. Louver Blade Design: Sloped at 45 degrees; reinforced with intermediate stiffeners, material thickness of .081 inch (2.06 mm) minimum, integral and lateral rain water stops positioned on blade.

C. Louver Frame: Channel shape, welded corner joints, material thickness of .081 inch (2.06 mm) minimum.

D. Intermediate Mullions: Recessed of extruded aluminum, profiled to suit louver frame.

E. Head and Sill Flashings: Extruded to required shape, single length in one piece per location.

F. Screens: Install screen mesh in shaped frame, reinforce corner construction, shop install to louver with fasteners.

2.5 FINISHES

A. Exterior and Interior Aluminum Surfaces, Screen. Prepainted finish of flouropolymer color as selected from manufacturers standard colors to match roof color.

PART 3 EXECUTION

3.1 EXAMINATION

A. Verify that prepared openings and flashings are ready to receive work and opening dimensions are as indicated on shop drawings.

B. Where applicable, verify that electric power is available and of the correct characteristics.

3.2 INSTALLATION

A. Install louver assembly in accordance with manufacturer's instructions.

B. Install louvers level and plumb.

C. Install flashings and align louver assembly to ensure moisture shed from flashings and diversion of moisture to exterior.

D. Secure louvers in opening framing with concealed fasteners.

E. Install insect screen and frame to exterior of louver.

F. Install insect screen and frame to intake louvers.

G. Install perimeter sealant and backing rod in accordance with Section 07900.

3.3 CLEANING

A. Strip protective finish coverings.

B. Clean surfaces and components.

END OF SECTION

SECTION 10430

EXTERIOR SIGNAGE

PART 1 GENERAL

1.1 REFERENCES

The publications listed below form a part of this specification to the extent referenced. The publications are referred to in the text by basic designation only.

ALUMINUM ASSOCIATION (AA)

AA DAF-45	(1980; R 1993) Designation System for Aluminum Finishes

AMERICAN SOCIETY FOR TESTING AND MATERIALS (ASTM)

ASTM A 123	(1989a) Zinc (Hot-Dip Galvanized) Coatings on Iron and Steel Products
ASTM A 653/A 653M	(1996) Steel Sheet, Zinc-Coated (Galvanized) or Zinc-Iron Alloy-Coated (Galvannealed) by the Hot-Dip Process
ASTM A 924/A 924M	(1996a) General Requirements for Steel Sheet, Metallic-Coated by the Hot-Dip Process
ASTM E 84	(1996a) Surface Burning Characteristics of Building Materials

AMERICAN WELDING SOCIETY (AWS)

AWS D1.1	(1996) Structural Welding Code - Steel

1.2 GENERAL

All exterior signage shall be provided by a single manufacturer. Exterior signage shall be of the design, detail, sizes, types, and message content shown on the drawings, shall conform to the requirements specified, and shall be provided at the locations indicated. Signs shall be complete with lettering, framing as detailed, and related components for a complete installation.

1.3 WIND LOAD REQUIREMENTS

Exterior signage shall be designed to withstand 16 km/h (10 mph) windload.

1.4 CHARACTER PROPORTIONS AND HEIGHTS

Letters and numbers on indicated signs for handicapped-accessible buildings shall have a width-to-height ratio between 3:5 and 1:1 and a stroke-width-to-height ratio between 1:5 and 1:10. Characters and numbers

on indicated signs shall be sized according to the viewing distance from which they are to be read. The minimum height is measured using an upper case letter "X". Lower case characters are permitted.

1.5 SUBMITTALS

Government approval is required for submittals with a "GA" designation; submittals having an "FIO" designation are for information only. The following shall be submitted in accordance with Section 01330 SUBMITTAL PROCEDURES:

SD-01 Data

Exterior Signs; FIO.

Manufacturer's descriptive data and catalog cuts.

SD-04 Drawings

Exterior Signs; GA.

Drawings showing elevations of each type of sign; dimensions, details, and methods of mounting or anchoring; shape and thickness of materials; and details of construction. A schedule showing the location, each sign type, and message shall be included.

SD-06 Instructions

Exterior Signs; FIO.

Manufacturer's installation instructions and cleaning instructions.

SD-14 Samples

Exterior Signs; GA.

One sample of each type of sign. Each sample shall consist of a complete sign panel with letters and symbols. Samples may be installed in the work, provided each sample is identified and location recorded. Two samples of manufacturer's standard color chips for each material requiring color selection and 0.3048 m (12 inch square) sample of sign face color sample.

1.6 QUALIFICATIONS

Signs, plaques, and dimensional letters shall be the standard product of a manufacturer regularly engaged in the manufacture of the products. Items of equipment shall essentially duplicate equipment that has been in satisfactory use at least 2 years prior to bid opening.

1.7 DELIVERY AND STORAGE

Materials shall be wrapped for shipment and storage, delivered to the jobsite in manufacturer's original packaging, and stored in a clean, dry area in accordance with manufacturer's instructions.

1.8 WARRANTY

Manufacturer's standard performance guarantees or warranties that extend beyond a one year period shall be provided.

PART 2 PRODUCTS

2.1 NOT USED

2.1.1 NOT USED

2.1.2 Panel And Post/Panel Type Signs

2.1.2.1 Posts

One-piece aluminum posts shall be provided with minimum 3.2 mm (0.125 inch) wall thickness. Posts shall be designed to accept panel framing system described. The post shall be designed to permit attachment of panel framing system without exposed fasteners. Caps shall be provided for each post.

2.1.2.2 Panel Framing System

Panel framing consisting of aluminum sections and interlocking track components shall be designed to interlock with posts with concealed fasteners.

2.1.2.3 Panels

Panels shall be provided in sizes shown on drawings. Panels shall be fabricated a minimum of 3.2 mm (0.125) inch aluminum. Panels shall be heliarc welded to framing system.

2.1.2.4 Finishes

Post finish shall be anodized conforming to AA DAF-45. Metal panel system finish shall be anodized conforming to AA DAF-45.

2.1.2.5 Mounting

Permanent mounting shall be provided by embedding posts in concrete foundation as shown.

2.2 NOT USED

2.3 GRAPHICS FOR EXTERIOR SIGNAGE SYSTEMS

2.3.1 Graphics

Signage graphics shall conform to the following:

Pressure sensitive precision cut vinyl letters shall be provided.

2.3.2 Messages

Typeface: Helvetica medium. Message and type size per direction of Contracting Officer.

2.4 NOT USED

2.5 NOT USED

2.6 NOT USED

2.7 ANODIC COATING

Anodized finish shall conform to AA DAF-45 as follows:

Integrated color anodized designation AA-M10-C22-A32, Architectural Class 0.010 to 0.018 mm (0.4 to 0.7 mil).

2.8 NOT USED

2.9 NOT USED

2.10 NOT USED

2.11 VINYL SHEETING FOR GRAPHICS

Vinyl sheeting shall be 5 to 7 year premium type and shall be in accordance with the flammability requirements of ASTM E 84 and shall be a minimum 0.08 mm film thickness. Film shall include a precoated pressure sensitive adhesive backing, Class 1, or positionable pressure sensitive adhesive backing, Class 3.

2.12 NOT USED

2.13 NOT USED

2.14 NOT USED

2.15 NOT USED

2.16 ANCHORS AND FASTENERS

Exposed anchor and fastener materials shall be compatible with metal to which applied and shall match in color and finish and shall be non-rusting, non-corroding, and non-staining. Exposed fasteners shall be tamper-proof.

2.17 SHOP FABRICATION AND MANUFACTURE

2.17.1 Factory Workmanship

Work shall be assembled in the shop, as far as practical, ready for installation at the site. Work that cannot be shop assembled shall be given a trial fit in the shop to ensure proper field assembly. Holes for bolts and screws shall be drilled or punched. Drilling and punching shall produce clean, true lines and surfaces. Welding to or on structural steel shall be in accordance with AWS D1.1. Welding shall be continuous along the entire area of contact. Exposed welds shall be ground smooth. Exposed surfaces of work shall have a smooth finish and exposed riveting shall be flush. Fastenings shall be concealed where practical. Items specified to be galvanized shall be by hot-dip process after fabrication if practical. Galvanization shall be in accordance with ASTM A 123 and ASTM A 653/A 653M, as applicable. Other metallic coatings of steel sheet shall be in accordance with ASTM A 924/A 924M. Joints exposed to the weather shall be formed to exclude water. Drainage and weep holes shall be included as required to prevent condensation buildup.

2.17.2 Dissimilar Materials

Where dissimilar metals are in contact, or where aluminum is in contact

with concrete, mortar, masonry, wet or pressure-treated wood, or absorptive materials subject to wetting, the surfaces shall be protected with a coat of asphalt varnish or a coat of zinc-molybdate primer to prevent galvanic or corrosive action.

2.18 COLOR, FINISH, AND CONTRAST

Characters and symbols shall contrast with their background - either light characters on a dark background or dark characters on a light background.

PART 3 EXECUTION

3.1 INSTALLATION

Signs shall be installed in accordance with approved manufacturer's instructions at locations shown on the drawings. Signs shall be installed plumb and true at mounting heights indicated, and by method shown or specified. Signs mounted on other surfaces shall not be installed until finishes on such surfaces have been completed.

3.1.1 Anchorage

Anchorage and fastener materials shall be in accordance with approved manufacturer's instructions for the indicated substrate. Anchorage not otherwise specified or indicated shall include slotted inserts, expansion shields, and powder-driven fasteners when approved for concrete; toggle bolts and through bolts for masonry; machine carriage bolts for steel; lag bolts and screws for wood.

3.1.2 Protection and Cleaning

The work shall be protected against damage during construction. After signs are completed and inspected, the Contractor shall cover all project identification, directional, and other signs which may mislead the public. Covering shall be maintained until instructed to be removed by the Contracting Officer or until the facility is to be opened for business. Signs shall be cleaned, as required, at time of cover removal.

3.2 FIELD PAINTED FINISH

Miscellaneous metals and frames shall be field painted in accordance with Section 09900 PAINTING, GENERAL. Anodized metals shall be protected from paint. Finish shall be free of scratches or other blemishes.

-- End of Section --

SECTION 10440

INTERIOR SIGNAGE

PART 1 GENERAL

1.1 REFERENCES

The publications listed below form a part of this specification to the extent referenced. The publications are referred to in the text by basic designation only.

AMERICAN NATIONAL STANDARDS INSTITUTE (ANSI)

ANSI Z97.1	(1984; Rev 1994) Safety Performance Specifications and Methods of Test for Safety Glazing Materials Used in Buildings

AMERICAN SOCIETY FOR TESTING AND MATERIALS (ASTM)

ASTM B 221	(1996) Aluminum and Aluminum-Alloy Extruded Bars, Rods, Wire, Profiles, and Tubes

1.2 GENERAL

Interior signage shall be of the design, detail, sizes, types, and message content shown on the drawings, shall conform to the requirements specified, and shall be provided at the locations indicated. Signs shall be complete with lettering, framing as detailed, and related components for a complete installation.

1.2.1 Character Proportions and Heights

Letters and numbers on indicated signs in handicapped-accessible buildings, which do not designate permanent rooms or spaces, shall have a width-to-height ratio between 3:5 and 1:1 and a stroke-width-to-height ratio between 1:5 and 1:10. Characters and numbers on indicated signs shall be sized according to the viewing distance from which they are to be read. The minimum height is measured using an upper case letter "X". Lower case characters are permitted. Suspended or projected overhead signs shall have a minimum character height of 75 mm (3 inches).

1.2.2 Raised and Brailled Characters and Pictorial Symbol Signs (Pictograms)

Letters and numbers on indicated signs which designate permanent rooms and spaces in handicapped-accessible buildings shall be raised 0.8 mm (1/32 inch) upper case, sans serif or simple serif type and shall be accompanied with Grade 2 Braille. Raised characters shall be at least 16 mm (5/8 inch) in height, but no higher than 50 mm (2 inches). Pictograms shall be accompanied by the equivalent verbal description placed directly below the pictogram. The border dimension of the pictogram shall be 152 mm (6 inches) minimum in height. Indicated accessible facilities shall use the international symbol of accessibility.

1.3 SUBMITTALS

Government approval is required for submittals with a "GA" designation; submittals having an "FIO" designation are for information only. The following shall be submitted in accordance with Section 01330 SUBMITTAL PROCEDURES:

SD-01 Data

Interior Signage; FIO.

Manufacturer's descriptive data, catalogs cuts, installation and cleaning instructions.

SD-04 Drawings

Interior Signage; GA.

Drawings showing elevations of each type of sign, dimensions, details and methods of mounting or anchoring, shape and thickness of materials, and details of construction. A schedule showing the location, each sign type, and message shall be included.

SD-14 Samples

Interior Signage; GA.

One sample of each of the following sign types showing typical quality and workmanship. The samples may be installed in the work, provided each sample is identified and location recorded.

a. Directional sign.

b. Door identification sign.

Two samples of manufacturer's standard color chips for each material requiring color selection.

1.4 QUALIFICATIONS

Signs, plaques, and dimensional letters shall be the standard product of a manufacturer regularly engaged in the manufacture of such products and shall essentially duplicate signs that have been in satisfactory use at least 2 years prior to bid opening.

1.5 DELIVERY AND STORAGE

Materials shall be delivered to the jobsite in manufacturer's original packaging and stored in a clean, dry area in accordance with manufacturer's instructions.

PART 2 PRODUCTS

2.1 ROOM IDENTIFICATION/DIRECTIONAL SIGNAGE SYSTEM

Signs shall be fabricated of Type ES/MP laminated thermosetting plastic suitable for engraving or acrylic plastic conforming to ANSI Z97.1 [extruded aluminum conforming to ASTM B 221].

2.1.1 Standard Room Signs

Signs shall consist of matte finish laminated thermosetting Type MP plastic. Units shall be frameless. Corners of signs shall be 10 mm as shown.

2.1.2 Changeable Message Strip Signs

Changeable message strip signs shall consist of laminated thermosetting Type MP plastic Type MP plastic captive message slider sign face with message slots and associated end caps, as detailed, for insertion of changeable message strips. Size of signs shall be as shown on the drawings. Individual message strips to permit removal, change, and reinsertion shall be provided as detailed. Corners of signs shall be squared.

2.1.3 Type of Mounting For Signs

Extruded aluminum brackets, mounted as shown, shall be furnished for hanging, projecting, and double-sided signs. Mounting for framed, hanging, and projecting signs shall be by mechanical fasteners. Surface mounted signs shall be provided with countersunk mounting holes in plaques and mounting screws. Sign inserts shall be provided with 1.6 mm thick foam tape.

2.1.4 Graphics

Signage graphics for modular identification/directional signs shall conform to the following:

Message shall be applied to panel using the silkscreen process. Silkscreened images shall be executed with photo screens prepared from original art. Handcut screens will not be accepted. Original art shall be defined as artwork that is a first generation reproduction of the specified art. Edges and corners shall be clean.

Acrylic letters 3 mm (1/8 inch) thick and chemically welded to 3.2 mm (0.125 inch) thick acrylic backup sheet.

Graphics shall be raised 0.8 mm (1/32 inch).

2.2 NOT USED

2.3 NOT USED

2.4 NOT USED

2.5 NOT USED

2.6 NOT USED

2.7 NOT USED

2.8 FABRICATION AND MANUFACTURE

2.8.1 Factory Workmanship

Holes for bolts and screws shall be drilled or punched. Drilling and punching shall produce clean, true lines and surfaces. Exposed surfaces of work shall have a smooth finish and exposed riveting shall be flush.

Fastenings shall be concealed where practicable.

2.8.2 Dissimilar Materials

Where dissimilar metals are in contact, the surfaces will be protected to prevent galvanic or corrosive action.

2.9 COLOR, FINISH, AND CONTRAST

In buildings required to be handicapped-accessible, the characters and background of signs shall be eggshell, matte, or other non-glare finish. Characters and symbols shall contrast with their background - either light characters on a dark background or dark characters on a light background.

PART 3 EXECUTION

3.1 INSTALLATION

Signs shall be installed in accordance with approved manufacturer's instructions at locations shown on the drawings. Signs shall be installed plumb and true at mounting heights indicated, and by method shown or specified. Required blocking shall be installed as detailed. Signs which designate permanent rooms and spaces in handicapped-accessible buildings shall be installed on the wall adjacent to the latch side of the door. Where there is no wall space to the latch side of the door, including at double leaf doors, signs shall be placed on the nearest adjacent wall. Mounting location for such signage shall be so that a person may approach within 75 mm (3 inches) of signage without encountering protruding objects or standing within the swing of a door. Signs on doors or other surfaces shall not be installed until finishes on such surfaces have been installed. Signs installed on glass surfaces shall be installed with matching blank back-up plates in accordance with manufacturer's instructions.

3.1.1 Anchorage

Anchorage shall be in accordance with approved manufacturer's instructions. Anchorage not otherwise specified or shown shall include slotted inserts, expansion shields, and powder-driven fasteners when approved for concrete; toggle bolts and through bolts for masonry; machine carriage bolts for steel; lag bolts and screws for wood. Exposed anchor and fastener materials shall be compatible with metal to which applied and shall have matching color and finish. Where recommended by signage manufacturer, foam tape pads may be used for anchorage. Foam tape pads shall be minimum 2 mm (1/16 inch) thick closed cell vinyl foam with adhesive backing. Adhesive shall be transparent, long aging, high tech formulation on two sides of the vinyl foam. Adhesive surfaces shall be protected with a 0.13 mm (5 mil) green flatstock treated with silicone. Foam pads shall be sized for the signage as per signage manufacturer's recommendations. Signs mounted to painted gypsum board surfaces shall be removable for painting maintenance. Signs mounted to lay-in ceiling grids shall be mounted with clip connections to ceiling tees.

3.1.2 Protection and Cleaning

The work shall be protected against damage during construction. Hardware and electrical equipment shall be adjusted for proper operation. Glass, frames, and other sign surfaces shall be cleaned in accordance with the manufacturer's approved instructions.

-- End of Section --

SECTION 10522

FIRE EXTINGUISHERS, CABINETS, AND ACCESSORIES

PART 1 GENERAL

1.1 SUBMITTALS

Submit the following in accordance with Section 01300, SUBMITTALS.

1.1.1 SD-01 Data

Fire Extinguisher and Cabinet

1.1.2 SD-14 Samples

Finish Samples

1.1.3 SD-06 Instructions

Manufacturer's Installation Instructions

1.2 DELIVERY AND STORAGE

Fire extinguishers and cabinets shall be delivered to the jobsite in the manufacturer's original, unopened packages and shall be stored in a clean, covered area.

PART 2 PRODUCTS

2.1 MATERIALS AND COMPONENTS

Fire extinguisher and cabinets shall be the standard product of a manufacturer regularly engaged in the production of this type of product.

2.2 FIRE EXTINGUISHER CABINET

Semi-recessed type of size to contain specified fire extinguisher.

2.2.1 Fabrication

Form body of cabinet from 0.91 mm thick sheet steel. Fabricate door and trim in one piece with all corners mitered, fully welded and ground smooth. Glaze doors with 3.175 mm thick clear glass. Design doors to open 180 degrees. Provide continuous hinge, pull handle and adjustable roller catch.

2.2.2 Cabinet Finish

Factory finish interior of cabinet body with baked-on semi-gloss white enamel. Factory finish door and frame with polyvinylidene fluoride finish.

2.3 FIRE EXTINGUISHER

Carbon Dioxide (CO_2) type: polyester-coated aluminum cylinder, with discharge horn and wall bracket; Class 10B:C, Size (lbs.) 15. Water (H_2O) type: stainless steel shell with pressure gauge; Class 2A, Size (gal.)

2-1/2.

PART 3 EXECUTION

3.1 INSTALLATION

Install fire extinguisher cabinets and secure in accordance with manufacturer's instructions. Install cabinets plumb and level, 915 mm from finish floor to inside bottom of cabinet. Secure rigidly in place. Place extinguisher in cabinet.

-- End of Section --

SECTION 10800

TOILET ACCESSORIES

PART 1 GENERAL

1.1 REFERENCES

The publications listed below form a part of this specification to the extent referenced. The publications are referred to in the text by basic designation only.

AMERICAN SOCIETY FOR TESTING AND MATERIALS (ASTM)

ASTM C 1036	(1991) Flat Glass

COMMERCIAL ITEM DESCRIPTIONS (CID)

CID A-A-2398	(Rev B) Curtain, Shower and Window (Metric - SI)

1.2 SUBMITTALS

Government approval is required for submittals with a "GA" designation, submittals having an "FIO" designation are for information only. The following shall be submitted in accordance with Section 01330 SUBMITTAL PROCEDURES:

SD-01 Data

Finishes; FIO. Accessory Items; FIO.

Manufacturer's descriptive data and catalog cuts indicating materials of construction, fasteners proposed for use for each type of wall construction, mounting instructions, operation instructions, and cleaning instructions.

SD-14 Samples

Finishes; GA. Accessory Items; GA.

One sample of each accessory proposed for use. Approved samples may be incorporated into the finished work, provided they are identified and their locations noted.

1.3 DELIVERY, STORAGE, AND HANDLING

Toilet accessories shall be wrapped for shipment and storage, delivered to the jobsite in manufacturer's original packaging, and stored in a clean, dry area protected from construction damage and vandalism.

1.4 WARRANTY

Manufacturer's standard performance guarantees or warranties that extend beyond a 1 year period shall be provided.

PART 2 PRODUCTS

2.1 MANUFACTURED UNITS

Toilet accessories shall be provided where indicated in accordance with paragraph SCHEDULE. Porcelain type, tile-wall accessories are specified in Section 09310 CERAMIC TILE. Each accessory item shall be complete with the necessary mounting plates and shall be of sturdy construction with corrosion resistant surface.

2.1.1 Anchors and Fasteners

Anchors and fasteners shall be capable of developing a restraining force commensurate with the strength of the accessory to be mounted and shall be suited for use with the supporting construction. Exposed fasteners shall be of tamperproof design and shall be finished to match the accessory.

2.1.2 Finishes

Except where noted otherwise, finishes on metal shall be provided as follows:

Metal	Finish
Stainless steel	No. 4 satin finish
Carbon steel, copper alloy, and brass	Chromium plated, bright

2.2 ACCESSORY ITEMS

Accessory items shall conform to the requirements specified below.

2.2.1 NOT USED

2.2.2 Grab Bar (GB)

Grab bar shall be 18 gauge, 32 mm (1-1/4 inches) OD Type 304 stainless steel. Grab bar shall be form and length as indicated. Concealed mounting flange shall have mounting holes concealed. Grab bar shall have satin finish. Installed bars shall be capable of withstanding a 2.225 kN vertical load without coming loose from the fastenings and without obvious permanent deformation. Space between wall and grab bar shall be 38 mm (1-1/2 inch).

2.2.3 NOT USED

2.2.4 Mirrors, Glass (MG)

Glass for mirrors shall be Type I transparent flat type, Class 1-clear. Glazing Quality q1 6 mm thick conforming to ASTM C 1036. Glass shall be coated on one surface with silver coating, copper protective coating, and mirror backing paint. Silver coating shall be highly adhesive pure silver coating of a thickness which shall provide reflectivity of 83 percent or more of incident light when viewed through 6 mm thick glass, and shall be free of pinholes or other defects. Copper protective coating shall be pure bright reflective copper, homogeneous without sludge, pinholes or other

defects, and shall be of proper thickness to prevent "adhesion pull" by mirror backing paint. Mirror backing paint shall consist of two coats of special scratch and abrasion-resistant paint and shall be baked in uniform thickness to provide a protection for silver and copper coatings which will permit normal cutting and edge fabrication.

2.2.5 NOT USED

2.2.6 NOT USED

2.2.7 NOT USED

2.2.8 Combination Paper Towel Dispenser/Waste Receptacle Units (PTDWR)

Dispenser/receptacle shall be semi-recessed and shall have a capacity of 400 sheets of C-fold, single-fold, or quarter-fold towel. Waste receptacle shall be designed to be locked in unit and removable for service. Locking mechanism shall be tumbler key lock. Waste receptacle shall have a capacity of 45 L. Unit shall be fabricated of not less than 0.8 mm stainless steel welded construction with all exposed surfaces having a satin finish. Waste receptacle that accepts reusable liner standard for unit manufacturer shall be provided.

2.2.9 NOT USED

2.2.10 NOT USED

2.2.11 Shower Curtain (SC)

Shower curtain shall conform to CID A-A-2398, Style I, size to suit conditions. Curtain shall be anti-bacterial nylon/vinyl fabric. Color shall be white.

2.2.12 Shower Curtain Rods (SCR)

Shower curtain rods shall be Type 304 stainless steel 32 mm (1-1/4 inch) OD by 1.24 mm (0.049 inch) minimum straight to meet installation conditions.

2.2.13 Soap Dispenser (SD)

Soap dispenser shall lavatory mounted, liquid type consisting of a polyethylene tank with a minimum 0.94 L (32 fluid ounces) holding capacity and a 150 mm (6 inch) spout length.

2.2.14 Soap Holder (SH)

Soap holder shall be surface mounted Type 304 stainless steel. Separate supports shall be stainless steel.

2.2.15 NOT USED

2.2.16 NOT USED

2.2.17 NOT USED

2.2.18 NOT USED

2.2.19 Towel Pin (TP)

Towel pin shall have concealed wall fastenings, and a pin integral with or permanently fastened to wall flange. Maximum projection shall be 100 mm . Design shall be consistent with design of other accessory items. Finish shall be bright polish.

2.2.20 Toilet Tissue Dispenser (TTD)

Toilet tissue holder shall be Type II - surface mounted with two rolls of standard tissue stacked vertically. Cabinet shall be stainless steel, satin finish.

PART 3 EXECUTION

3.1 INSTALLATION

Toilet accessories shall be securely fastened to the supporting construction in accordance with the manufacturer's approved instructions. Accessories shall be protected from damage from the time of installation until acceptance.

3.2 CLEANING

Material shall be cleaned in accordance with manufacturer's recommendations. Alkaline or abrasive agents shall not be used. Precautions shall be taken to avoid scratching or marring of surfaces.

-- End of Section --

SECTION 10900

MANUFACTURED WARDROBES

PART 1 GENERAL

1.1 DESIGN

Wardrobes shall be constructed of steel. The material selected shall be used throughout the project. Wardrobes shall be factory fabricated, furnished in standard sizes, and produced by a manufacturer regularly engaged in the construction of prefabricated wardrobes. Each wardrobe shall be a complete unit capable of relocation without modifying or adding components, except for anchors and scribes. Common sides or backs between adjacent units are not permissible. The dimensions indicated are for the purpose of establishing general layout. Minor variations necessary to coordinate the details of construction will be permitted. Added details shall be compatible with the details specified or shall be in accordance with alternate details approved for use. All parts shall be manufactured to standards that will permit replacement without modifying the remaining parts. Materials to be used and which are not specified shall be of a quality consistent with the quality required for specified materials and suitable for the end use.

1.2 CONFIGURATION

Wardrobe lockers shall be one-compartment type with one hinged door and shall have a clothes hanging rod, and a hat shelf. Clothes hanging compartment shall contain a clothes hanging rod, and a hat shelf. General dimensions shall be in accordance with the following:

Overall height: 1830 mm. (72 inches).

Base: 100 mm (4 inches) high.

Clothes hanging rod: Full width of wardrobe, with 75 mm (3 inch) clearance between rod and hat shelf and/or shelf where hat shelf does not exist.

1.3 SUBMITTALS

Government approval is required for submittals with a "GA" designation; submittals having an "FIO" designation are for information only. The following shall be submitted in accordance with Section 01330 SUBMITTAL PROCEDURES:

SD-01 Data

Wardrobe Locker Units; GA.

Manufacturer's printed data, catalog cuts, and installation instructions.

SD-04 Drawings

Wardrobe Locker Units; GA.

Drawings showing plans, elevations, sections, construction details,

thickness of members, methods of fastening, and hardware details. Information as needed to fully describe the wardrobes and their installation into the work, and specifications for the required finish shall be included.

SD-09 Reports

Static Load Tests; FIO.

Test results indicating conformance to static load tests.

SD-13 Certificates

Wardrobe Locker Units; FIO.

Certificate of compliance with AWI Standards. An AWI certification seal permanently affixed to the wardrobe may be supplied in lieu of a certificate.

SD-14 Samples

Wardrobe Locker Units; GA. Metal Finishes; GA.

One complete wardrobe unit. The sample unit may be incorporated into the finished wardrobe installation, provided the unit is identified and its location noted.

1.4 DELIVERY AND STORAGE

Steel wardrobe lockers may be delivered knocked-down except chest units shall be delivered completely assembled. Wardrobes shall be delivered to the site in undamaged condition, stored in fully covered areas, and protected from damage.

PART 2 PRODUCTS

2.1 HARDWARE

Hardware may be the manufacturer's standard; however, it shall meet or exceed the following minimum requirements.

2.1.1 Hinges

Hinges shall be brass or steel, not less than 1.57 mm (0.062 inch) thick, 5 knuckle, tamper-proof institutional type, joint length not less than 63 mm, (2-1/2 inches), primed and painted to match wardrobe. When doors are closed, only a smooth beveled and rounded joint shall be exposed. Doors 1050 mm (42 inches) and less on the hinged side shall have two hinges; doors more than 1050 mm (42 inches) on the hinged side shall have three hinges.

2.1.2 Latches

The door on the clothes hanging compartment shall be provided with a three-point latching and locking mechanism. The handle shall be of the lever type, of cast brass or bronze, and shall be designed to permit locking by padlocking the handle to a steel keeper with a matching hole. A 1.9 mm (14 gauge) rectangular corrosion resisting steel shield shall be provided to protect the door from damage at the handle and padlock area.

The interior components of the mechanism shall include locking bars or rods not less than 13 mm thick, two steel upper guides and two steel lower guides, three-finger cam, and applied strikes or reinforced openings for latching. The handle, keeper, and locking bars or rods shall have a chromium finish, and other components shall have a chromium, nickel, zinc, or cadmium plated finish.

2.1.3 Clothes Rods

Clothes hanging rods shall be chromium plated or zinc-coated steel tubing approximately 25 mm in diameter and with a minimum wall thickness of 2.1 mm. Clothes hanging rods with exposed ends shall be provided with plastic caps to prevent marring the finish on the inside of the wardrobe.

2.1.4 NOT USED

2.1.5 Silencers

Silencers of rubber or similar resilient material shall be provided on door frames at close proximity to each latching point to minimize noise when the door is closed. Silencers shall be replaceable.

2.2 STEEL SHEETS

Steel sheets shall be cold-rolled, commercial quality, stretcher level degree of flatness and of manufacturer's standard gauges specified.

2.3 STEEL WARDROBE CONSTRUCTION

2.3.1 Workmanship

Sheet metal bends shall be accurately formed. Cut edges shall be straight and smooth. Holes for the reception of mechanical fasteners shall be accurately punched or drilled and have burrs removed. Butt welds shall extend full width of joining edges, shall be ground smooth and flush with adjacent surfaces when on exterior of wardrobes. Resistance welds shall be 5 mm minimum diameter and maximum spacing of 200 mm on center. Welds shall be thoroughly fused and sound, and shall be free from cracks, fissures, pits, holes, gas pockets, porosity, and undercuttings. There shall be no sharp corners or protrusions in the final assembled wardrobes. Use of mechanical fasteners exposed to exterior of unit shall be limited to those required for application of hardware and scribes.

2.3.2 Base

Base shall be closed type, formed to provide a bearing surface at the floor, and provided with floor mounting holes. Bases constructed as part of the framing and panel members shall be of the same gauge as those members. Bases constructed as separate components shall be not lighter than 1.6 mm (16 gauge) steel.

2.3.3 Back and Side Panels

Back and side panels shall be formed of sheet steel not lighter than 0.85 mm (22 gauge) and shall be reinforced if necessary to impart rigidity to unbroken spans.

2.3.4 Front

Front shall be not lighter than 1.3 mm (18 gauge) steel and multichannel, formed as required to provide strength and rigidity to side panels, top, and bottom without exposing fasteners. Front shall be reinforced as necessary to serve as a stable mount and frame for doors and hardware. Fronts formed as part of side panels shall be equivalent to the specified 1.3 mm (18 gauge) steel multichannel construction. With the door closed, clearance between door edge and frame shall be uniform and shall not exceed 3 mm (1/8 inch) and door face shall be flush with the face of the front.

2.3.5 Top

Top shall be not lighter than 0.85 mm (22 gauge) steel, flat exterior surface, and formed as required for securing to back, front and sides.

2.3.6 Bottom

Bottom shall be not lighter than 1.3 mm (18 gauge) steel and shall be formed as required for securing to back, front and sides.

2.3.7 Upper Shelves

Hat shelf and upper storage shelf shall be not lighter than 1.3 mm (18 gauge) steel and shall be formed as required for securing to back and sides.

2.3.8 Doors

Door shall be of double-wall type with not lighter than 0.85 mm (22 gauge) steel inside panel and not lighter than 1.0 mm (20 gauge) outside steel panel separated by not less than 19 mm of rigid mineral insulation cemented between the panels. Doors shall be reinforced or otherwise prepared to receive the hardware and to provide strength and rigidity to the doors.

2.3.9 Scribes and Closures

Scribes and closures shall be not lighter than 1.0 mm (20 gauge).

2.3.10 NOT USED

2.3.11 Metal Finishes

Finish shall be an approved factory-applied baked-enamel, semigloss finish in accordance with manufacturer's standard finishes.

2.3.12 Color

Color shall be as indicated on the drawings.

PART 3 EXECUTION

3.1 INSTALLATION

Wardrobe lockers shall be installed in accordance with the manufacturer's approved installation instructions and positioned in accordance with the layout shown, set level, and secured in place. Wardrobes with backs to walls shall be secured to the wall. Free standing or island-type installations shall be secured to the floor. Wardrobe lockers which are adjacent to each other shall be secured to each other. There shall be no

sharp corners or protrusions in the final assembled wardrobe lockers. Hardware shall be adjusted and left in good working order. Doors and drawers shall not stick or bind. Wardrobe lockers shall be cleaned and protected from damage until acceptance.

-- End of Section --

SECTION 12320

CABINETS AND COUNTERTOPS

PART 1 GENERAL

1.1 REFERENCES

The publications listed below form a part of this specification to the extent referenced. The publications are referred to in the text by basic designation only.

BUILDERS HARDWARE MANUFACTURERS ASSOCIATION (BHMA)

BHMA ANSI/BHMA A156.9	(1994) Cabinet Hardware

KITCHEN CABINET MANUFACTURERS ASSOCIATION (KCMA)

KCMA ANSI/KCMA A161.1	(1995) Recommended Performance & Construction Standards for Kitchen and Vanity Cabinets

NATIONAL ELECTRICAL MANUFACTURERS ASSOCIATION (NEMA)

NEMA LD 3	(1995) High-Pressure Decorative Laminates

1.2 DESIGN

Cabinets shall be wood, factory-fabricated and finished in the manufacturer's standard sizes and finishes of the type, design, and configuration indicated. Cabinets shall be constructed as specified and shall meet the requirements of KCMA ANSI/KCMA A161.1. Wall and base cabinet assemblies shall consist of individual units joined into continuous sections. Fastenings shall be accomplished to permit removal and replacement of individual units without affecting the remainder of the installation. Counters shall be provided with watertight sink rim when indicated. Drawers shall be removable and shall be equipped with position stops to avoid accidental complete withdrawals. Shelves shall be fixed or adjustable as indicated.

1.3 SUBMITTALS

Government approval is required for submittals with a "GA" designation; submittals having an "FIO" designation are for information only. The following shall be submitted in accordance with Section 01330 SUBMITTAL PROCEDURES:

SD-01 Data

Cabinets and Countertops; FIO.

Manufacturer's printed data, catalog cuts, installation and cleaning instructions.

SD-04 Drawings

Cabinets and Countertops; GA.

Drawings showing each type of cabinet and related item, and clearly indicating the complete plan, location, and elevations of the cabinets and accessories and pertinent details of construction, fabrication, and attachments.

SD-09 Reports

Cabinets and Countertops; FIO.

Test reports certifying that all cabinets comply with the requirements of KCMA ANSI/KCMA A161.1. Tests shall be conducted by independent laboratories approved by KCMA. KCMA certification seals affixed to the cabinets will be accepted in lieu of certified test reports.

SD-14 Samples

Cabinets and Countertops; GA.

In lieu of individual samples, complete minimum size cabinets may be furnished as samples. Mock-up units are not acceptable. Samples shall be of sufficient size to show color, pattern, and method of assembly.

a. Counter top and backsplash - One section, containing both.

b. Door and drawer front - One of each, with hardware mounted.

c. Melamine plastic color samples approximately 50 x 75 mm (2 x 3 inches) size.

1.4 DELIVERY AND STORAGE

Cabinets shall be delivered to the jobsite wrapped in a protective covering. Cabinets shall be stored in accordance with manufacturer's recommendations in an adequately ventilated, dry location that is free of dust, water, or other contaminants and in a manner to permit access for inspection and handling. Cabinets shall be handled carefully to prevent damage to the surfaces. Damaged items that cannot be restored to like-new condition shall be replaced.

PART 2 PRODUCTS

2.1 CABINETS

Wall and base cabinets shall be of the same construction and same outside appearance. Door design shall be solid flush face from vendors standard styles. Shelves shall be fixed or fully adjustable as indicated. Adjustable shelves shall be capable of adjusting on approximately 75 mm (3 inch) increments. Shelves shall be supported by self-locking clips or wood dowels. Dowels shall be approximately 8 mm (5/16 inch) in diameter by40 mm (1-9/16 inches) long. Dowels shall be inserted into borings for the shelf adjustments. Shelves shall be minimum 13 mm (1/2 inch) thick plywood or minimum 13 mm (1/2 inch) thick 20 kg (45 pound) density particle board. Drawer fronts shall be 16 mm (5/8 inch) thick, 20 kg (45 pound) density particle board core.

2.1.1 NOT USED

2.1.2 Frameless Type Cabinets

The cabinets shall be of frameless design and construction. Cabinets shall be constructed of minimum 16 mm thick, 20 kg density particle board end and floor panels. Cabinet back shall be constructed of minimum 5 mm thick, 20 kg density particle board. Hanging rails shall be doweled and glued to end panels, then fastened and hot melt glued to cabinet back. Toe kick plates shall be recessed, doweled and glued to the end panels. Top and bottom corners shall be braced with either hardwood blocks glued together with water resistant glue and nailed in place, or fastened with metal or plastic corner braces.

2.2 COUNTERTOPS AND BACKSPLASH

Countertop and backsplash shall be constructed of 19 mm (3/4 inch) thick plywood or 19 mm (3/4 inch) thick, 20 kg (45 pound) density particle board core and shall be post formed cove type. Cove type shall be a single unit with self-edging and plastic laminate coved at the juncture of the countertop and backsplash. Edging and trim shall consist of plastic laminate cut and fitted to all exposed edges. End splashes constructed of 19 mm (3/4 inch) plywood or 19 mm (3/4 inch) thick, 20 kg (45 pound) density particle board core shall be supplied.

2.3 Sink Rims

Sink rims shall be of the corrosion resistant steel clamping type, sized to the sink, and a standard product of a manufacturer regularly producing this type of equipment.

2.4 FINISH

2.4.1 Cabinet Finish

Cabinets shall be provided with a factory-applied durable finish in accordance with KCMA ANSI/KCMA A161.1 requirements and of a type standard with the manufacturer. Exposed exterior surfaces shall be plastic laminate finish.

2.4.2 Melamine Laminated Interior Cabinet Finish

Plywood, particle board or tempered hardboard cabinet backs shall be finished with a melamine laminate on the exposed side. Particle board shelves shall be covered on both sides with a laminated melamine finish. Melamine laminate shall conform to the requirements of NEMA LD 3 and laminate adhesive shall be contact type applied to both surfaces.

2.4.3 Plastic Laminates on Countertops

Continuous sheets of longest lengths practicable shall be provided. Joints in surface sheeting shall be tight and flush and held to a practicable minimum. When the countertop and backsplash are two separate units, GP50 plastic laminate shall be used. When the countertop and backsplash are one unit, PF42 plastic laminate shall be used. Plastic laminate shall conform to the requirements of NEMA LD 3 and plastic laminate adhesive shall be contact type applied to both surfaces. For fully formed and cove type countertops, the post-forming plastic laminate shall not be bent to a radius smaller than the limit recommended by the plastic manufacturer.

2.4.4 Backer Sheets

Backer Sheets of high pressure plastic laminate, shall conform to NEMA LD 3, Grade BK20 and shall be applied to the underside of all core material.

2.5 HARDWARE

Hardware shall conform to BHMA ANSI/BHMA A156.9, shall be suitable for kitchen cabinet use, and shall include all miscellaneous hardware for a complete installation. Door hinges shall be self-closing type. Drawer runners shall have nylon rollers standard with the manufacturer. Hardware and fastenings for doors and drawers with particle board cores shall be of the through-bolt type.

2.6 COLOR, TEXTURE, AND PATTERN

Design, color, and finish shall be as indicated.

PART 3 EXECUTION

3.1 INSTALLATION

Cabinets shall be installed level, plumb, and true to line, and shall be attached to the walls or floors with suitable devices to securely anchor each unit. Countertops, accessories, and hardware shall be installed as indicated. Installation shall be in accordance with the manufacturer's approved printed instructions. The inner edge of sink cut-outs in laminated plastic tops shall be painted with a coat of semigloss enamel paint and sink flanges shall be set in a bed of sealant. Closer and filler strips and finish moldings shall be provided as required. Prior to final acceptance, doors shall be aligned, and hardware shall be adjusted.

3.2 CLEANING

Cabinet and countertop surfaces shall be cleaned in accordance with manufacturer's instructions.

-- End of Section --

SECTION 12490

WINDOW TREATMENT

PART 1 WORK DESCRIPTION

1.1 REFERENCES

The publications listed below form a part of this specification to the extent referenced. The publications are referred to in the text by basic designation only.

FEDERAL SPECIFICATIONS (FS)

FS AA-V-00200 (Rev B) Venetian Blinds

1.2 GENERAL

Window treatment shall be provided, complete with necessary brackets, fittings, and hardware. Each window treatment type shall be a complete unit provided in accordance with paragraph WINDOW TREATMENT PLACEMENT SCHEDULE. Equipment shall be mounted and operated as indicated. Windows to receive a treatment shall be completely covered. The Contractor shall take measurements at the building and shall be responsible for the proper fitting and hanging of the equipment.

1.3 SUBMITTALS

Government approval is required for submittals with a "GA" designation; submittals having an "FIO" designation are for information only. The following shall be submitted in accordance with Section 01330 SUBMITTAL PROCEDURES:

SD-01 Data

Window Treatments and Hardware; FIO.

Manufacturer's data composed of catalog cuts, brochures, product information, and maintenance instructions.

SD-04 Drawings

Window Treatments and Hardware; GA.

Drawings showing fabrication and installation details. Drawings shall show layout and locations of track, direction of draw, mounting heights, and details.

SD-14 Samples

Window Treatments and Hardware; GA.

Three samples of each type and color of window treatment. Blind slats or louvers shall be 150 mm (6 inches) in length for each color. Track shall be 150 mm (6 inches) in length. Shade material shall be minimum 150 x 150 mm (6 x 6 inches) in size.

1.4 DELIVERY, STORAGE, AND HANDLING

Components shall be delivered to the jobsite in the manufacturer's original packaging with the brand or company name, item identification, and project reference clearly marked. Components shall be stored in a dry location that is adequately ventilated and free from dust, water, or other contaminants and shall have easy access for inspection and handling. Materials shall be stored flat in a clean dry area with temperature maintained above 10 degrees C.

1.5 FIELD MEASUREMENTS

The Contractor shall become familiar with details of the work, verify dimensions in the field, and shall advise the Contracting Officer of any discrepancy before performing the work.

1.6 WARRANTY

Manufacturer's standard performance guarantees or warranties that extend beyond a 1 year period shall be provided.

PART 2 PRODUCTS

2.1 WINDOW BLINDS

Each blind, including hardware, accessory items, mounting brackets and fastenings, shall be provided as a complete unit produced by one manufacturer. All parts shall be one color unless otherwise shown, and match the color of the blind slat. Steel features shall be treated for corrosion resistance.

2.1.1 Horizontal Blinds

Horizontal blinds shall conform to FS AA-V-00200, Type II (25 mm (1 inch) slats), except as modified below. Blind units shall be capable of nominally 180 degree partial tilting operation and full-height raising. Blinds shall be inside mount. Tapes for Type I slats shall be longitudinal reinforced vinyl plastic in 1-piece turn ladder construction.

2.1.1.1 Head Channel and Slats

Head channel shall be steel or aluminum nominal 0.61 mm (0.024 inch) for Type II. Slats shall be aluminum, not less than 0.203 mm (0.008 inch) thick, and of sufficient strength to prevent sag or bow in the finished blind. A sufficient amount of slats shall be provided to assure proper control, uniform spacing, and adequate overlap.

2.1.1.2 Controls

The slats shall be tilted by a transparent tilting wand, hung vertically by its own weight, and shall swivel for easy operation. The tilter control shall be of enclosed construction. Moving parts and mechanical drive shall be made of compatible materials which do not require lubrication during normal expected life. The tilter shall tilt the slats to any desired angle and hold them at that angle so that any vibration or movement of ladders and slats will not drive the tilter and change the angle of slats. A mechanism shall be included to prevent over tightening. The wand shall be of sufficient length to reach to within 1500 mm (5 feet) of the floor.

2.1.1.3 Intermediate Brackets

Intermediate brackets shall be provided for installation of blinds over 1200 mm (48 inches) wide and shall be installed as recommended by the manufacturer.

2.1.1.4 Hold-Down Brackets

Universal type hold-down brackets for sill or jamb mount shall be provided.

2.2 NOT USED

2.3 COLOR

Color shall be as indicated on the drawings.

PART 3 EXECUTION

3.1 WINDOW TREATMENT PLACEMENT SCHEDULE

Window covering shall be provided for all Type A windows.

3.2 INSTALLATION

Installation shall be in accordance with the approved detail drawings and manufacturer's installation instructions. Units shall be level, plumb, secure, and at proper height and location relative to window units. The Contractor shall furnish and install supplementary or miscellaneous items in total, including clips, brackets, or anchorages incidental to or necessary for a sound, secure, and complete installation. Installation shall not be initiated until completion of room painting and finishing operations. Upon completion of the installation, window treatments shall be adjusted for form and appearance, shall be in proper operating condition, and shall be free from damage or blemishes. Damaged units shall be repaired or replaced by the Contractor as directed by the Contracting Officer.

-- End of Section --

SECTION 13080

SEISMIC PROTECTION FOR MECHANICAL, ELECTRICAL EQUIPMENT

PART 1 GENERAL

1.1 REFERENCES

The publications listed below form a part of this specification to the extent referenced. The publications are referred to in the text by basic designation only.

AMERICAN SOCIETY FOR TESTING AND MATERIALS (ASTM)

ASTM A 36/A 36M	(1996) Carbon Structural Steel
ASTM A 53	(1996) Pipe, Steel, Black and Hot-Dipped, Zinc-Coated Welded, and Seamless
ASTM A 153	(1996) Zinc Coating (Hot-Dip) on Iron and Steel Hardware
ASTM A 307	(1994) Carbon Steel Bolts and Studs, 60,000 PSI Tensile Strength
ASTM A 500	(1993) Cold-Formed Welded and Seamless Carbon Steel Structural Tubing in Rounds and Shapes
ASTM A 563	(1994) Carbon and Alloy Steel Nuts
ASTM A 603	(1994) Zinc-Coated Steel Structural Wire Rope
ASTM A 653/A 653M	(1996) Steel Sheet, Zinc-Coated (Galvanized) or Zinc-Iron Alloy-Coated (Galvannealed) by the Hot-Dip Process
ASTM E 488	(1990) Strength of Anchors in Concrete and Masonry Elements
ASTM E 580	(1991) Application of Ceiling Suspension Systems for Acoustical Tile and Lay-In Panels in Areas Requiring Seismic Restraint

AMERICAN SOCIETY OF MECHANICAL ENGINEERS (ASME)

ASME B18.2.1	(1981; Supple 199O; R 1992) Square and Hex Bolts and Screws (Inch Series)
ASME B18.2.2	(1987; R 1993) Square and Hex Nuts (Inch Series)

INTERNATIONAL CONFERENCE OF BUILDING OFFICIALS (ICBO)

ICBO-01	(1997) Uniform Building Code (3 Vol.)

SHEET METAL & AIR CONDITIONING CONTRACTORS' NATIONAL ASSOCIATION (SMACNA)

SMACNA-12	(1991; Appx E, 1993) Seismic Restraint Manual Guidelines for Mechanical Systems

UNDERWRITERS LABORATORIES (UL)

UL 1570	(1995) Fluorescent Lighting Fixtures
UL 1571	(1991; Rev thru Mar 95) Incandescent Lighting Fixtures

1.2 SYSTEM DESCRIPTION

1.2.1 General

The requirements for seismic protection measures described in this section shall be applied to mechanical/electrical equipment and systems specified herein. Seismic protection requirements shall be in accordance with ICBO-01 using an importance factor of 1.0 and shall be provided in addition to any other requirements called for in other sections of these specifications. This facility shall be designed as being in seismic zone I; no other zone values shall be used to establish bracing requirements. Lateral support against earthquake induced forces shall be accomplished by positive attachments without consideration of friction resulting from gravity loads.

1.2.2 Mechanical/Electrical Equipment

Mechanical/electrical equipment shall include the following items to the extent required on the drawings or in other sections of these specifications:

Boilers and furnaces	Storage Tanks for Oil and Water
Water Heaters	Steam, Water, Oil and Gas Piping
Expansion Air Separator Tanks	Cable Trays
Heat Exchangers	Bridge Cranes and Monorails
Water Chiller Units	Engine-Driven Generators
Cooling Towers	Air and Refrigerant Compressors
Control Panels	Air Handling Units
Pumps with Motors	Switchgear
Light Fixtures	Transformers
Storage Racks	Suspended Ceiling Assemblies
Ducts	Flash Tanks
Unit Heaters	Accumulator Tank
Exhaust and Return Fans	Solar Heating Units

1.2.3 Mechanical/Electrical Systems

The following mechanical and electrical systems shall be installed as required on the drawings and other sections of these specifications and shall be seismically protected in accordance with this specification:

All Piping Inside the Building in Accordance With This Specification
All Water Supply Systems
Storm and Sanitary Sewer Systems
All Process Piping
Outside Heat Distribution, Return, and Condensate Systems

Pneumatic Tube Distribution System

1.2.4 Equipment and Systems

The bracing for the following mechanical/electrical equipment and systems shall be developed by the Contractor in accordance with the requirements of this specification: 05120.

1.2.5 Exclusion

Seismic protection of piping for fire protection systems shall be installed as specified in Sections 15330 WET PIPE SPRINKLER SYSTEM, FIRE PROTECTION.

1.2.6 Pipes and Ducts Requiring No Special Seismic Restraints

Seismic restraints may be omitted from the following installations:

a. Gas piping less than 25 mm (1 inch) inside diameter.

b. Piping in boiler and mechanical equipment rooms less than 32 mm (1-1/4 inches) inside diameter.

c. All other piping less than 38 mm (1-1/2 inches) inside diameter.

d. Electrical conduit less than 64 mm (2-1/2 inches) inside diameter.

e. Rectangular air handling ducts less than 0.37 square meters (4 square feet) in cross sectional area.

f. Round air handling ducts less than 457 mm (18 inches) in diameter.

g. Piping suspended by individual hangers 300 mm or less in length from the top of pipe to the bottom of the supporting structural member where the hanger is attached, except as noted below.

h. Ducts suspended by hangers 300 mm or less in length from the top of the duct to the bottom of the supporting structural member, except as noted below.

In exemptions g. and h. all hangers shall meet the length requirements. If the length requirement is exceeded by one hanger in the run, the entire run shall be braced.

1.2.7 All Other Interior Piping, Conduit, and Ducts

Interior piping, conduit, and ducts not covered by paragraphs Exclusion or Pipes and Ducts Requiring No special Seismic Restraints shall be seismically protected in accordance with the provisions herein.

1.3 SUBMITTALS

Government approval is required for submittals with a "GA" designation; submittals having an "FIO" designation are for information only. The following shall be submitted in accordance with Section 01330 SUBMITTAL PROCEDURES:

SD-01 Data

Bridge Cranes and Monorails; GA. Bracing and Coupling; GA. Lighting

Fixtures in Buildings; GA. Miscellaneous Equipment; GA.

Copies of the design calculations with the detail drawings. Calculations shall be stamped by a registered engineer and shall verify the capability of structural members to which bracing is attached for carrying the load from the brace.

SD-04 Drawings

Bracing and Coupling; GA. Flexible Couplings or Joints; GA. Resilient Vibration Isolation Devices; GA. Bridge Cranes and Monorails; GA. Lighting Fixtures in Buildings; GA. Miscellaneous Equipment.

Detail drawings along with catalog cuts, templates, and erection and installation details, as appropriate, for the items listed. Submittals shall be complete in detail; shall indicate thickness, type, grade, class of metal, and dimensions; and shall show construction details, reinforcement, anchorage, and installation with relation to the building construction.

SD-13 Certificates

Flexible Ball Joints; GA.

Flexible ball joints shall be certified to be suitable for the service intended by the manufacturer, based on not less than 2 years' satisfactory operation in a similar application.

PART 2 PRODUCTS

2.1 MATERIALS AND EQUIPMENT

Materials and equipment shall conform to the requirements specified below:

2.1.1 Bolts and Nuts

Squarehead and hexhead bolts, and heavy hexagon nuts, ASME B18.2.1, ASME B18.2.2, or ASTM A 307 for bolts and ASTM A 563 for nuts. Bolts and nuts used underground and/or exposed to weather shall be galvanized in accordance with ASTM A 153.

2.1.2 Sway Bracing

Material used for members listed [in this section] [and] [on the drawings], shall be structural steel conforming with the following:

a. Plates, rods, and rolled shapes, ASTM A 36/A 36M.

b. Wire rope, ASTM A 603.

c. Tubes, ASTM A 500, Grade B.

d. Pipes, ASTM A 53, Type E or S, Grade B.

e. Light gauge angles, less than 6 mm thickness, ASTM A 653/A 653M.

2.1.3 Flexible Couplings

Flexible couplings shall have same pressure and temperature ratings as

adjoining pipe.

2.1.3.1 Flexible Ball Joints

Flexible ball joints shall have cast or wrought steel casing and ball parts capable of 360-degree rotation plus not less than 15-degree angular movement.

2.1.3.2 Flexible Mechanical Joints

a. Mechanical couplings for steel or cast iron pipe shall be of the sleeve type and shall provide a tight flexible joint under all reasonable conditions, such as pipe movement caused by expansion, contraction, slight settling or shifting of the ground, minor variations in trench gradients, and traffic vibrations. Where permitted in other sections of these specifications, joints utilizing split-half couplings with grooved or shouldered pipe ends may be used.

b. Sleeve-type couplings shall be used for joining plain-end pipe sections. The coupling shall consist of one steel middle ring, two steel followers, two gaskets, and necessary steel bolts and nuts to compress the gaskets. Underground bolts shall be high-strength type as specified above.

2.1.4 Lighting Fixture Supports

Fixture supports shall be malleable iron. Lighting fixtures and supports shall conform to UL 1570 or UL 1571 as applicable.

PART 3 EXECUTION

3.1 BRACING AND COUPLING

Bracing and coupling shall conform to the arrangements shown. Provisions of this paragraph apply to all piping within a 1.5 m line around outside of building unless buried in the ground. Piping grouped for support on trapeze-type hangers shall be braced at the same intervals as determined by the smallest diameter pipe of the group. No trapeze-type hanger shall be secured with less than two 13 mm (1/2 inch) bolts. Bracing rigidly attached to pipe flanges, or similar, shall not be used where it would interfere with thermal expansion of piping.

3.2 BUILDING DRIFT

Sway braces for a run shall not be attached to two dissimilar structural elements of a building that may respond differentially during an earthquake unless a flexible joint is provided. Joints capable of accommodating seismic displacements shall be provided where pipes pass through a building seismic or expansion joint, or where rigidly supported pipes connect to equipment with vibration isolators. For threaded piping, swing joints shall be provided. For piping with manufactured ball joints the seismic drift shall be 0.015 meters per meter of height above the base where the seismic separation occurs; this drift value shall be used in place of the expansion given in the manufacturer's selection table.

3.3 FLEXIBLE COUPLINGS OR JOINTS

3.3.1 Building Piping

Flexible couplings or joints in building piping shall be provided at bottom of all pipe risers larger than 90 mm (3-1/2 inches) in diameter. Flexible couplings or joints shall be braced laterally without interfering with the action of the flexible coupling or joint. Cast iron waste and vent piping need only comply with these provisions when caulked joints are used. Flexible bell and spigot pipe joints using rubber gaskets or no-hub fittings may be used at each branch adjacent to tees and elbows for underground waste piping inside of building to comply with these requirements.

3.3.2 Underground Piping

Underground piping and 100 mm (4 inch) or larger conduit, except heat distribution system, shall have flexible couplings installed where the piping enters the building. The couplings shall accommodate relative movement between the pipe and the building in any direction. Additional flexible couplings shall be provided where shown on the drawings.

3.4 PIPE SLEEVES

Pipe sleeves in interior non-fire rated walls shall be sized as indicated on the drawings to provide clearances that will permit differential movement of piping without the piping striking the pipe sleeve.

3.5 SPREADERS

Spreaders shall be provided between adjacent piping runs to prevent contact during seismic activity whenever pipe or insulated pipe surfaces are less than 100 mm apart. Spreaders shall be applied at same interval as sway braces at an equal distance between the sway braces. If rack type hangers are used where the pipes are restrained from contact by mounting to the rack, spreaders are not required for pipes mounted in the rack. Spreaders shall be applied to surface of bare pipe and over insulation on insulated pipes utilizing high-density inserts and pipe protection shields in accordance with the requirements of Section 15080THERMAL INSULATION FOR MECHANICAL SYSTEMS.

3.6 ANCHOR BOLTS

3.6.1 Cast-In-Place

Floor or pad mounted equipment shall use cast-in-place anchor bolts, except as specified below. One nut shall be provided on each bolt. Anchor bolts shall conform to the following tabulation for the various equipment weights and specified seismic zone or the manufacturer's installation recommendations, whichever is the most stringent, unless otherwise shown on the drawings. Anchor bolts that exceed the normal depth of equipment foundation piers or pads shall either extend into concrete floor or the foundation shall be increased in depth to accommodate bolt lengths.

3.6.2 Minimum Bolt Sizes, Cast-In-Place Anchor Bolts

Maximum Equipment	Minimum Bolt Sizes (mm)*				
Weight (Kg)	Zone 4	Zone 3	Zone 2A	Zone 2B	Zone 1
225	13	13	13	13	13

Maximum Equipment	Minimum Bolt Sizes (mm)*				
Weight (Kg)	Zone 4	Zone 3	Zone 2A	Zone 2B	Zone 1
450	13	13	13	13	13
2250	13	13	13	13	13
4500	13	13	13	13	13
9000	13	13	13	13	13
13500	16	13	13	1	13
22500	22	16	13	13	13
45000	**	**	16	22	13

*Based on four bolts per item, a minimum embedment of 12 bolt diameters, a minimum bolt spacing of 16 bolt diameters and a minimum edge distance of 12 bolt diameters. Equivalent total cross-sectional area shall be used when more than four bolts per item are provided. Anchor bolts shall conform to ASTM A 307. Anchor bolts shall have an embedded straight length equal to at least 12 times nominal diameter of the bolt.

**Equipment weighing more than 22,500 kg in Zones 3 and 4 shall have at least six bolts per item.

3.6.3 Expansion or Chemically Bonded Anchors

Expansion or chemically bonded anchors shall not be used unless test data in accordance with ASTM E 488 has been provided to verify the adequacy of the specific anchor and application. The expansion anchor size shall be not less than that required in paragraph Minimum Bolt Sizes, Cast-In-Place Anchor Bolts. Expansion and chemically bonded anchors shall be installed in accordance with the manufacturer's recommendations. The allowable forces shall be adjusted for the spacing between anchor bolts and the distance between the anchor bolt and the nearest edge, as specified by the manufacturer.

3.6.3.1 General Testing

Expansion and chemically bonded anchors shall be tested in place after installation. The tests shall occur not more than 24 hours after installation of the anchor and shall be conducted by an independent testing agency; testing shall be performed on random anchor bolts as described below.

3.6.3.2 Torque Wrench Testing

Torque wrench testing shall be done on not less than 50 percent of the total installed expansion anchors and at least one anchor for every piece of equipment containing more than two anchors. The test torque shall equal the minimum required installation torque as required by the bolt manufacturer. Torque wrenches shall be calibrated at the beginning of each day the torque tests are performed. Torque wrenches shall be recalibrated for each bolt diameter whenever tests are run on bolts of various diameters. The applied torque shall be between 20 and 100 percent of wrench capacity. The test torque shall be reached within one half turn of the nut, except for 9 mm sleeve anchors which shall reach their torque by one quarter turn of the nut. If any anchor fails the test, similar anchors not previously tested shall be tested until 20 consecutive anchors pass. Failed anchors shall be retightened and retested to the specified torque; if the anchor still fails the test it shall be replaced.

3.7 RESILIENT VIBRATION ISOLATION DEVICES

Selection of anchor bolts for vibration isolation devices and/or snubbers for equipment base and foundations shall follow the same procedure as in paragraph ANCHOR BOLTS except that an equipment weight equal to five times the actual equipment weight shall be used.

3.7.1 Resilient and Spring-Type Vibration Devices

Vibration isolation devices shall be selected so that the maximum movement of equipment from the static deflection point shall be 15 mm.

3.8 SWAY BRACES FOR PIPING

Sway braces shall be provided to prevent movement of the pipes under seismic loading. Braces shall be provided in both the longitudinal and transverse directions, relative to the axis of the pipe. The bracing shall not interfere with thermal expansion requirements for the pipes as described in other sections of these specifications.

3.8.1 Transverse Sway Bracing

Transverse sway bracing for steel and copper pipe shall be provided at intervals not to exceed those given in the tabulation below as modified for each seismic zone. All runs shall have a minimum of two transverse braces. Transverse sway bracing for pipes of materials other than steel and copper shall be provided at intervals not to exceed the hanger spacing as specified in Section 15400 PLUMBING, GENERAL PURPOSE.

3.8.2 Maximum Span for Transverse Sway Braces in Seismic Zone 4

Pipe Diameter	Std. Wgt. Steel Pipe - 40S		Ex. Strong Steel Pipe - 80S		Copper Tube Type L	
(mm)	*L(m)	**F(kN)	*L(m)	**F(kN)	*L(m)	**F(kN)
25	6.7	0.30	6.7	0.4	3.4	0.08
40	7.6	0.60	7.9	0.8	3.7	0.16
50	8.8	1.0	9.1	1.3	4.3	0.30
65	9.8	1.7	10.0	2.1	4.8	0.50
80	10.4	2.5	10.7	3.2	5.2	0.70
90	11.0	3.3	11.6	4.1	5.5	1.0
100	11.9	4.3	12.2	5.3	5.8	1.3
125	12.5	6.4	13.4	8.5	6.1	2.1
150	13.7	9.4	14.0	12.2	6.7	3.3
200	14.9	16.6	16.5	22.9	7.9	6.9
250	16.5	27.1	18.0	34.1	8.5	11.7
300	17.7	38.1	18.6	46.0	9.4	17.6

*L = Maximum span between lateral supports multiplied by 1.1 for Zone 3, 1.25 for Zone 2A, 1.2 for Zone 2B, or 1.35 for Zone 1.

**F = Horizontal force on the brace multiplied by 0.8 for Zone 3, 0.5 for Zone 2A, 0.6 for Zone 2B, or 0.3 for Zone 1.

NOTE: Bracing shall consist of at least one vertical angle 50 x 50 mm x 16 gauge and one diagonal angle of the same size.

3.8.3 Longitudinal Sway Bracing

Longitudinal sway bracing shall be provided at 12 m intervals except when the location of sway braces is shown on the drawings for the particular piping system. All runs shall have one longitudinal brace minimum. Sway braces shall be constructed in accordance with the drawings. Branch lines, walls, or floors shall not be used as sway braces.

3.8.4 Vertical Runs

Vertical runs of piping shall be braced at not more than 3 m vertical intervals. For tubing, bracing shall be provided at no more than 1.2 m spacing. Vertical braces shall be above the center of gravity of the span being braced. All sway braces shall be constructed in accordance with the drawings. Branch lines, walls, or floors shall not be used as sway braces.

3.8.5 Anchor Rods, Angles, and Bars

Anchor rods, angles, and bars shall be bolted to either pipe clamps or pipe flanges at one end and cast-in-place concrete or masonry insert or clip angles bolted to the steel structure on the other end. Rods shall be solid metal or pipe as specified below. Anchor rods, angles, and bars shall not exceed lengths given in the tabulation below.

3.8.6 Maximum Length for Anchor Braces

Type	Size (millimeters)	Maximum Length* (meters)	Allowable Loads* (kilonewtons)
Angles	38 x 38 x 6	1.5	25.5
	50 x 50 x 6	2.0	34.5
	64 x 38 x 6	2.5	43.5
	75 x 64 x 6	2.5	48.0
	75 x 75 x 6	3.0	53.0
Rods	91	1.0	16.5
	22	1.0	22.0
Flat Bars	38 x 6	0.4	14.0
	50 x 6	0.4	18.0
	50 x 10	0.5	28.5
Pipes (40s)	25	2.0	18.0
	32	2.8	24.5
	40	3.2	29.5
	50	4.0	39.5

*Based on the slenderness ratio of l/r = 200 and ASTM A 36/A 36M steel, where l is the length of the brace and r is the least radius of gyration of the brace.

3.8.7 Clamps and Hangers

Clamps or hangers on uninsulated pipes shall be applied directly to pipe. Insulated piping shall have clamps or hangers applied over insulation in accordance with Section 15080 THERMAL INSULATION FOR MECHANICAL SYSTEMS.

3.8.8 Bolts

Bolts used for attachment of anchors to pipe and structure shall be not less than 13 mm (1/2 inch) diameter.

3.9 SWAY BRACES FOR DUCTS

3.9.1 Braced Ducts

Bracing details and spacing for rectangular and round ducts shall be in accordance with SMACNA-12, including Appendix E, using Seismic Hazard Level C and connection level 1.

3.9.2 Unbraced Ducts

Hangers for unbraced ducts shall be positively attached to the duct within 50 mm of the top of the duct with a minimum of two #10 sheet metal screws. Unbraced ducts shall be installed with a 150 mm minimum clearance to vertical ceiling hanger wires.

3.10 SWAY BRACES FOR CONDUIT

Conduit shall be braced as for an equivalent weight pipe.

3.11 EQUIPMENT SWAY BRACING

3.11.1 Suspended Equipment

Equipment sway bracing shall be provided for items supported from overhead floor or roof structures. Braces shall consist of angles, rods, wire rope, bars, or pipes arranged as shown and secured at both ends with not less than 13 mm (1/2 inch) bolts. Braces shall conform to paragraph Maximum Length for Anchor Braces. Sufficient braces shall be provided for equipment to resist a horizontal force equal to 0.28 times the weight of equipment without exceeding safe working stress of bracing components. Details of equipment bracing shall be submitted for approval. In lieu of bracing with vertical supports, these items may be supported with hangers inclined at 45 degrees directed up and radially away from equipment and oriented symmetrically in 90-degree intervals on the horizontal plane, bisecting the angles of each corner of the equipment, provided that supporting members are properly sized to support operating weight of equipment when hangers are inclined at a 45-degree angle.

3.11.2 Floor or Pad Mounted Equipment

3.11.2.1 Shear Resistance

Floor mounted equipment shall be bolted to the floor. Requirements for the number and installation of bolts to resist shear forces shall be in accordance with paragraph ANCHOR BOLTS.

3.11.2.2 Overturning Resistance

The ratio of the height of the equipment (measured from the base to the center of gravity of the equipment) to the minimum distance between anchor bolts shall be used to determine if overturning forces need to be considered in the sizing of anchor bolts. If this ratio is greater than 8.89 the bolt values in paragraph Minimum Bolt Sizes, Cast-In-Place Anchor Bolts shall not be used and calculations shall be provided to verify the adequacy of the anchor bolts for combined shear and overturning.

3.12 MISCELLANEOUS EQUIPMENT

3.12.1 Rigidly Mounted Equipment

The following specific items of equipment to be furnished under this contract shall be constructed and assembled to withstand a horizontal lateral force of 0.06 times the operating weight of the equipment, at vertical center of gravity of the equipment without causing permanent deformation, dislocations, separation of components, or other damage, which would render the equipment inoperative for significant periods of time following an earthquake.

Rigidly Mounted Equipment

Boilers
Chillers
Air-Handling Units
Cooling Towers
Transformers
Switch Gears
Centers
Free Standing Electric Motors
Surge Tanks

3.12.2 Nonrigid or Flexibly-Mounted Equipment

The following specific items of equipment to be furnished shall be constructed and assembled to resist a horizontal lateral force of 0.20 times the operating weight of the equipment at the vertical center of gravity of the equipment.

3.13 LIGHTING FIXTURES IN BUILDINGS

Lighting fixtures and supports shall conform to the following:

3.13.1 Pendant Fixtures

Loop and hook or swivel hanger assemblies for pendant fixtures shall be fitted with a restraining device to hold the stem in the support position during earthquake motions. Pendant-supported fluorescent fixtures shall also be provided with a flexible hanger device at the attachment to the fixture channel to preclude breaking of the support. The motion of swivels or hinged joints shall not cause sharp bends in conductors or damage to insulation.

3.13.2 Recessed Fluorescent Fixtures

Recessed fluorescent individual or continuous-row mounted fixtures shall be supported by a seismic-resistant suspended ceiling support system and shall be fastened thereto at each corner of the fixture with bolts or approved clips; or shall be provided with fixture support wires attached to the building structural members using two wires for individual fixtures, attached to opposite corners, and one wire per unit of continuous row mounted fixtures. Each wire support shall be capable of supporting four times the weight of the fixture. Recessed lighting fixtures not over 25 kg in weight and suspended or pendant-hung fixtures not over 10 kg in weight may be supported by and attached directly to the ceiling system runners by a positive attachment such as screws or bolts, number and size as required

by design seismic zone.

3.13.3 Assembly Mounted on Outlet Box

A supporting assembly that is intended to be mounted on an outlet box shall be designed to accommodate mounting features on 100 mm boxes, 75 mm plaster rings, and fixture studs.

3.13.4 Surface-Mounted Fluorescent Fixtures

Surface-mounted fluorescent individual or continuous-row fixtures shall be attached to a seismic-resistant ceiling support system. Fixture support devices for attaching to suspended ceilings shall be a locking-type scissor clamp or a full loop band that will securely attach to the ceiling support. Fixtures attached to underside of a structural slab shall be properly anchored to the slab at each corner of the fixture.

3.13.5 Wall-Mounted Emergency Light Unit

Each wall-mounted emergency light unit shall be secured to remain in place during a seismic disturbance.

3.13.6 Lateral Force

Light fixture bracing shall be designed to resist a lateral force of 0.28 times the fixture weight.

3.14 SUSPENDED CEILING ASSEMBLIES

The structural members of ceiling support systems, used primarily to support acoustical tile panels or acoustical panel lay-in tiles, with or without lighting fixtures, ceiling-mounted air terminals, and ceiling-mounted services, shall conform to the following:

3.14.1 Design Loads

The main runners and cross-runners and their splices and intersection connections shall be designed for two times the design load or ultimate axial tension or compression (minimum 550 N (120 pounds).) The connections at the splices and intersections shall be of a mechanical interlocking type that cannot easily be disengaged. Ceiling structural systems shall be designed to withstand required vertical load as well as a lateral force of [30] [23] or [11.3] percent of the ceiling weight. The ceiling weight shall include all lighting fixtures and other equipment that are laterally supported by the ceiling and shall be not less than 200 Pa (4.0 psf). Exception: Ceiling areas of 13 square meters or less surrounded by walls that connect directly to the structure above will be exempt from the lateral-load standards of this specification.

3.14.2 Installation Requirements

Installation requirements shall be in accordance with ASTM E 580 except as follows:

3.14.2.1 Vertical Support

Hanger wires supporting a maximum tributary ceiling area of 1.5 square meters shall be a minimum of 10 gauge in diameter. The size of wires supporting a tributary ceiling area greater than 1.5 square meters shall be

substantiated by design calculations. Hanger attachment devices used in ceiling systems not exceeding 200 Pa shall be capable of supporting a minimum allowable load of 1.3 kN (300 pounds). Hanger attachment devices used in ceiling systems exceeding 200 Pa shall be capable of supporting the design load and shall be substantiated by design calculations. If hangers must be splayed more than one horizontal to six vertical, the resulting horizontal force shall be offset by bracing or counter-splaying, and substantiated by design calculations.

3.14.2.2 Lateral Support

In lieu of the design criteria stated above, where ceiling loads do not exceed 200 Pa, lateral support for the ceiling system may be provided by four galvanized wires of minimum No. 12 gauge, as indicated in ASTM E 580, paragraph 4.4.6.

3.14.3 Lighting Fixture and Air Diffuser Supports

Lighting fixture and air diffuser supports shall be designed and installed to meet the requirements of equipment supports in the preceding paragraphs of this specification with the following exceptions:

a. Recessed lighting fixtures not over 25 kg in weight and suspended and pendent-hung fixtures not over 10 kg in weight may be supported and attached directly to the ceiling system runners by a positive attachment such as screws or bolts.

b. Air diffusers that weigh not more than 10 kg and that receive no tributary loading from ductwork may be positively attached to and supported by the ceiling runners.

3.15 BRIDGE CRANES AND MONORAILS

Bridges cranes and monorails shall be designed to accommodate the following horizontal lateral force coefficient of [0.11] [0.23] [0.30] [0.45] [0.60] times weight, applied in any direction to the center of gravity of the equipment. The weight of such equipment need not include any live load, and the equivalent static force so computed will be assumed to act nonconcurrently with other prescribed nonseismic horizontal forces when considering the design of the crane and monorails. The crane design shall be suitable for the forces previously specified in addition to the normal horizontal loads prescribed by standards cited in other sections of these specifications.

-- End of Section --

SECTION 13090

X-RAY SHIELDING

PART 1 GENERAL

1.1 REFERENCES

The publications listed below form a part of this specification to the extent referenced. The publications are referred to in the text by basic designation only.

AMERICAN SOCIETY FOR TESTING AND MATERIALS (ASTM)

ASTM B 749	(1985; R 1991) Lead and Lead Alloy Strip, Sheet, and Plate Product
ASTM C 36	(1997) Gypsum Wallboard
ASTM C 129	(1996a) Non Load Bearing Concrete Masonry Units

1.2 SYSTEM DESCRIPTION

X-ray shielding shall beconstructed such that it is notimpaired by joints, openings for ducts, pipes, or other openings through shielding, or conduits, service boxes, and other items embedded in the shielding. The shielding shall appear to be continuous. Lead patches, lead sleeves, and/or mazes shall be installed as required to provide continuity of the shielding. Sleeves shall be not less than one inch in length. Thicknesses indicated for shielding are minimum acceptable thickness.

1.3 SUBMITTALS

Government approval is required for submittals with a "GA" designation; submittals having an "FIO" designation are for information only. The following shall be submitted in accordance with Section 01330 SUBMITTAL PROCEDURES:

SD-01 Data

Materials; [GA].

Manufacturer's catalog cuts, descriptive data, and installation instructions.

SD-04 Drawings

Materials; [GA].

Drawings indicating thickness of lead at all locations; construction at floor, walls, ceiling, and columns; details of lead laps and lap securing methods; fastenings, profiles, details of items and accessories penetrating the shielding materials; and any special method of construction.

SD-13 Certificates

Materials; [_GA__]

Certification indicating the shielding materials supplied complies with specified quality and thicknesses.

1.4 QUALIFICATIONS

Work shall be performed by a company which specializes in the type of shielding work required by Contract documents. Company shall have a minimum of 5 years of documented successful experience.

1.5 DELIVERY, STORAGE AND HANDLING

Materials shall be delivered in the original containers bearing the name of the manufacturer and brand name. Shielding materials shall be stored off the ground under watertight cover. Damaged materials shall be removed from the premises.

1.6 WARRANTY

Lead sheet shielding materials shall be warranted against sagging and curling for 10 years.

PART 2 PRODUCTS

2.1 LEAD SHEET

Lead sheet shall conform to ASTM B 749, Grade C, thickness as shown.

2.2 LEAD-LINED CONCRETE MASONRY UNITS

Lead-lined concrete masonry units shall conform to ASTM C 129, Type 1. Each unit shall have a single thickness of unpierced lead sheet bonded or anchored permanently in the center of the unit/block. Blocks shall be constructed to provide an effective lead lap between adjoining blocks either by the overlapping of lead in adjoining blocks or by lead bars at block joints when erected. Nominal dimensions for full-size units shall be 300 x 300 by 100 mm. Nominal dimensions for half-size units shall be 150 x 300 x by 100 mm. Units 100 mm thick shall be used for shielding requirements up to 6 mm of lead.

2.3 LEAD-LINED GYPSUM WALLBOARD

Lead-lined gypsum wallboard shall be a single thickness of unpierced lead laminated to 16 mm thick gypsum board conforming to ASTM C 36, Type III, Grade R, Class 1, Form a, Style 1.

2.4 LEAD-HEADED NAILS

Lead-headed nails may be used to accomplish shielding not less than that provided by the barrier. The size, type and design shall be recommended by the manufacturer of material to be installed.

2.5 LEAD TABS OR CLIPS

Lead tabs or clips shall be unpierced sheet lead not less than the thickness of lead in the barrier. Prior to folding, the tabs shall be

rectangular in shape and shall be the required size to provide an effective lead lap over an unleaded nail, screw, or tie wire penetration when folded.

2.7 LEAD-LINED STEEL DOOR FRAMES

Steel frames shall be as specified in Section 08110 STEEL DOORS AND FRAMES. The inside of frames shall be lined with a single thickness of sheet lead. The thickness of the lead lining shall be the same as the lead lining of the system in which the frames are used. Linings shall be installed at the factory, and shall be continuous. Lining shall be formed to contour of frame. Lead shields shall be formed around areas prepared to receive hardware. Each lining shall be wide enough to provide and maintain an effective lead lap with the lead of the adjoining shielding units.

2.8 3 EXECUTION

3.1 INSTALLATION

Installation shall be performed in accordance with drawings and approved manufacturer's recommendations.

3.1.1 Workmanship

Sheet lead shall be installed free of waves, lumps, and wrinkles and with a minimum of joints. Joints in sheet lead shall provide protection equivalent to the protection provided by the adjacent sheet lead. Joints shall be finished smooth and neat.

3.1.2 Protection

Lead shields shall be used to maintain continuity of protection where unshielded built-in items penetrate lead linings. Where outlet boxes, junction boxes, ducts, conduits, and similar items prevent the use of shields, lead sleeves or lead lining shall be used. Fasteners shall not disrupt the continuity of shielding.

3.2 LEAD-LINED BLOCKS

Lead-lined blocks shall be laid in courses with staggered vertical joints. Blocks designed for lead laps at joints shall be erected to provide minimum 25 mm tight lead laps without soldering or burning. Blocks designed to have lead bars in joints shall be erected to permit lead bars with a thickness not less than the lead sheet thickness in block to be inserted in horizontal and vertical joints.

3.2.1 Joints

Mortar joints shall be 10 mm thick and shall be filled solid with Type N mortar as specified under Section 04200 MASONRY. Mortar between lead laps will not be permitted.

3.2.2 Blocks

Blocks shall extend into frame openings, with lead projecting into rabbets of frames to effectively lap with lead frames of frame linings. Voids around frames shall be filled with mortar.

3.2.3 Pipe and Conduit Chases

Where pipe and conduit chases occur within the blocks, concrete may be removed from one side of the partition as required to permit pipe installation. Where necessary to remove lead lining for pipe or conduit installations, continuous sheet lead shall be installed and overlapped on the adjoining construction. Voids around pipe and conduit chases within the blocks shall be filled with mortar. Voids shall be finished flush with the face of partition. Pipe and conduit chases shall not be installed directly opposite each other within the same partition.

3.4 SUSPENDED LEAD-LINED CEILINGS

Suspended lead-lined ceilings shall consist of lead-lined gypsum board, ceiling bars, and hangers. Continuous bars shall be spaced approximately 315 mm on center and supported by steel hangers from overhead structure. Lead in the ceiling shall lap lead in the wall by not less than 38 mm.

3.5 LEAD DOOR THRESHOLDS

Thresholds shall be installed in accordance with approved detail drawings and shall be constructed as detailed on plans. Prior to installation, lead threshold surfaces in contact with concrete shall be painted with a coat of asphalt paint or latex material.

3.6 TESTING AND CERTIFICATION

Before and after x-ray equipment has been installed and placed in operating condition, the x-ray installation shall be surveyed by a qualified expert. Survey shall be performed in accordance with NCRP requirements. Four copies of surveyor's report shall be furnished to the Contracting Officer. Any part of x-ray shielding work found to be defective shall be corrected or replaced, including all other work affected thereby.

-- End of Section --

TM 5-805-12

TECHNICAL MANUAL

X-RAY SHIELDING

HEADQUARTERS, DEPARTMENT OF THE ARMY

JANUARY 1990

REPRODUCTION AUTHORIZATION/RESTRICTIONS

This manual has been prepared by or for the Government and is public property and not subject to copyright.

Reprints or replications of this manual should include a credit substantially as follows:
"Department of the Army Technical manual 5-805-12, X-Ray Shielding, 8 January 1990."

TECHNICAL MANUAL

NO. 5-805-12

HEADQUARTERS
DEPARTMENT OF THE ARMY
WASHINGTON, DC, *8 January 1990*

X-RAY SHIELDING

	Paragraph	Page
Purpose	1	1-1
Scope	2	1-1
References	3	1-1
Glossary	4	1-1
General recommendations	5	1-1
Assumptions	6	1-2
Shielding criteria	7	1-2
Materials and installations	8	1-2
Lead-lined doors and accessories	9	1-14
Inspection	10	1-22
Testing and certification	11	1-24
Glossary		

List of Figures

Figure 1. Fastening methods 1-7
2. Wallboard 1-8
3. Lath 1-9
4. Plywood panels 1-10
5. Suspended lath ceiling 1-11
6. Blocks (light lead-lined) 1-12
7. Blocks (heavy lead-lined) 1-13
8. Floor lead 1-14
9. Lead door threshold 1-15
10. Lead-lined doors 1-16
11. Door hardware 1-17
12. Lead-lined control window frames 1-18
13. Lead-lined film transfer cabinet 1-19
14. Shapes of lead-lined control screens 1-20
15. Modular lead-lined control screens 1-21
16. Baffle design for openings in secondary barriers 1-22
17. Baffle design for openings in primary barriers 1-23
18. Lead shielding for service boxes and conduit in concrete barriers 1-24

List of Tables

Table 1. Minimum shielding requirements for radiographic x-ray facilities 1-3
2. Minimum shielding requirements for fluoroscopic x-ray facilities 1-4
3. Summary of shielding requirements for diagnostic x-ray facilities 1-5
4. Lead shielding conversions 1-6

*This manual supersedes TM 5-805-12, 15 October 1980.

1. Purpose.

This technical manual is a guide for designing, constructing, and certifying dental, diagnostic, and therapeutic radiation exposure rooms using equipment having energies up to 10 million electron volts (MeV).

2. Scope.

This manual provides guidance to personnel involved in planning, designing, procuring, constructing, and certifying Army radiation exposure rooms.

3. References.

The following documents form a part of this manual to the extent referenced:

a. Army Technical Bulletin (TB): TB MED 521—Occupational and Environmental Health Mangement and Control of Diagnostic X-Ray, Therapeutic X-Ray, and Gamma-Beam Equipment.

b. National Council on Radiation Protection and Measurements (NCRP); 7910 Woodmont Ave., Landow Bldg, Suite 1016, Bethesda, MD 20014.

Report 33—Medical X-Ray and Gamma-Ray Protection for Energies up to 10 MeV (Equipment Design and Use). (Feb 68)

Report 35—Dental X-Ray Protection. (Mar 70)

Report 49—Structural Shielding Design and Evaluation for Medical Use of X-Rays and Gamma-Rays of Energies up to 10 MeV. (Sep 76)

Report 51—Radiation Protection Design Guidelines for 0.1–100 MeV Particle Accelerator Facilities. (1977)

4. Glossary.

The glossary contains a list of specialized words with definitions.

5. General recommendations.

a. Qualification of expert. In accordance with TB MED 521, the design or modification of diagnostic x-ray, therapeutic x-ray, or gamma-beam therapy facilities shall be undertaken only by experts certified in radiological physics or therapeutic radio-logical physics by the American Board of Radiology or the American Board of Health Physics or those having equivalent qualifications. Design contracts should require submittal of such certification along with experience records.

b. Design drawings. Design drawings will be reviewed and signed by the expert before submittal to the Contracting Officer for review. Drawings will be reviewed for compliance with proper design and shielding requirements set forth in TB MED 521 and NCRP Report 49. All designs will be evaluated by the Office of the Surgeon General (SG-FP-ZA), US Army Health Facility Planning Agency, Washington, D.C. 20310 and the Health Physics Division, US Army Environmental Hygiene Agency (USAEHA), Aberdeen Proving Ground, MD 21010.

c. Supplied data. The following data should be made available to support the technical review.

(1) Architectural information.

(*a*) Drawings of radiation rooms and adjacent areas; scale preferred is 1/4 inch = 1 foot, or larger.

(*b*) Information about occupancy below, above, and adjacent to radiation rooms.

(*c*) Type of proposed or existing construction of floors, ceilings, and walls.

(*d*) Vertical sections and plot plans for megavoltage therapy installations, including cobalt.

(2) Equipment less the 150 kilovolts.

(*a*) Purpose of equipment will be stated as therapy, radiography, fluoroscopy, special procedures, or cystoscopy.

(*b*) Kilovolts and expected weekly workload, if known.

(3) Equipment 150 kilovolts and greater, including gamma apparatus.

(*a*) Kilovolts or type of gamma source.

(*b*) Milliamperes or roentgens per minute at 1 meter.

(*c*) Weekly workload, if known, expressed in milliamperes or roentgens at 1 meter.

(*d*) Restrictions in beam orientations without and with beam interceptor, if any.

(*e*) Use factor for walls and ceilings, if known.

(*f*) Leakage radiation of source housing with beam "ON."

(*g*) Attenuation by beam interceptor, if any.

(*h*) Possible future increases in workload and radiation energy, and modification in beam orientation.

(*i*) Manufacturer's electrical requirements for high voltage generators.

d. Typical designs. Typical designs are shown in TB MED 521 and NCRP Reports 49 and 51.

e. Structural details. Structural details and detailed drawings must show construction of sheet-lead barriers. The joining of lead materials must be designed to avoid radiation leakage and scattering. All drawings will conform to NCRP Reports 35 and 49 and will become part of the design drawings. Specific drawings and specifications should be prepared to:

(1) Indicate the penetration in barriers, such as pipes, ducts, conduits, and louvers, that should be provided with baffles.

(2) Show where and how lead is to be placed at doors, door openings, door sills, observation windows, corners, floors and ceilings, and other breaks in the lead barrier.

(3) Specify what should not be pierced by nails, screws, rivets, and bolts, without adequate provisions for equivalent cover protection.

6. Assumptions.

The following assumptions should be made in determining the shielding requirements for x-ray and gamma-ray medical and dental facilities referenced in TB MED 521:

a. X-ray technicians or radiologists will spend their entire work period in the controlled area.

b. Areas adjacent to the radiological rooms are to be occupied by persons nonoccupationally exposed to ionizing radiation.

c. The x-ray system is operated at its maximum rated peak tube potential (kilovolt peak) and tube current (milliamperes).

d. The minimum source-to-occupied-area distance is 5 feet.

e. The minimum distance from an unshielded outside wall of a radiographic room to an occupied area is at least 50 feet.

f. The required thickness of the shielding depends on the quality of radiation, quantity being produced in some chosen period of time, distance from the tube, degree and nature of occupancy, type of area, and material of which the barrier is to be constructed.

7. Shielding criteria.

Minimum shielding thicknesses will conform to the following criteria. In all other areas, shielding will be designed for the specific environment. See tables 1, 2, 3, and 4 for general shielding information.

a. Dental rooms. Guidelines for the thicknesses of barriers (walls, ceiling, and floor) will be determined from NCRP Report 35 and TB MED 521.

(1) Shielding will cover walls and doors up to 7 feet above the floor.

(2) Ceilings will be covered with lead if space above can be occupied and calculations indicate a need for increased shielding.

(3) Floors will be covered with lead if space below can be occupied and calculations indicate a need for increased shielding.

(4) Control booth or protective barrier, including observation window, will have the same rating as specified shielding. Control booth will be arranged so that radiation has to be scattered twice before entering the protected area. The control booth will be large enough to adequately protect the controls and operator. The viewing window shall be at least 16 by 24 inches. For standing operations, the bottom of the viewing window should be 45 inches above the floor. There shall be a minimum of 18 inches from the edge of the shield to the edge of the viewing window.

b. Diagnostic and therapy installations. Guidelines for the thicknesses of barriers (walls, ceilings, and floor) shall be determined from NCRP Report 49 and TB MED 521.

(1) Photofluorographic equipment uses a camera to photograph the image produced on a fluorographic screen. When the x-ray tube orientation is restricted so that the useful beam can be directed only toward the camera, a primary protective barrier is required only for the wall behind the camera. This primary protective barrier will extend at least 1 foot beyond the perimeter of the useful beam at the wall. All other wall, floor, and ceiling areas of photofluorographic and automatic upright chest installations are secondary barriers and should have a lead equivalent thickness of at least 1/32 inch.

(2) Floors will be covered with lead if the area below the radiography room can be occupied.

(3) Ceilings will be covered with lead if the area above the radiography room can be occupied.

8. Materials and Installations.

Material used in protective barriers will conform to NCRP Reports 35 and 49. Lead is generally used as a shielding material in facilities using x-ray potentials of 300 kilovolts and less. For higher voltages, standard concrete (140 to 160 lb-ft^3), Hi-Density concrete (190 to 340 lb-ft^3) and earth are normally used. Lead sheets

Table 1. Minimum shielding requirements for radiographic x-ray facilities.

WUT[1] in mA-min/week			DISTANCE IN FEET (METERS) FROM SOURCE (X-RAY TUBE TARGET) TO OCCUPIED AREA										
100 kVp	125 kVp	150 kVp											
1000	400	200	5 (1.5)	7 (2.1)	10 (3.0)	14 (4.2)	20 (6.1)	28 (8.4)	40 (12.2)				
500	200	100		5 (1.5)	7 (2.1)	10 (3.0)	14 (4.2)	20 (6.1)	28 (8.4)	40 (12.2)			
250	100	50			5 (1.5)	7 (2.1)	10 (3.0)	14 (4.2)	20 (6.1)	28 (8.4)	40 (12.2)		
125	50	25				5 (1.5)	7 (2.1)	10 (3.0)	14 (4.2)	20 (6.1)	28 (8.4)	40 (12.2)	
62.5	25	12.5					5 (1.5)	7 (2.1)	10 (3.0)	14 (4.2)	20 (6.1)	28 (8.4)	40 (12.2)
31	12	6						5 (1.5)	7 (2.1)	10 (3.0)	14 (4.2)	20 (6.1)	28 (8.4)
15	6	3							5 (1.5)	7 (2.1)	10 (3.0)	14 (4.2)	20 (6.1)
AREA TYPE	MATERIAL		PRIMARY BARRIER THICKNESS[4]										
CONTROLLED	LEAD, mm[2]		1.95	1.65	1.4	1.15	0.9	0.65	0.45	0.3	0.2	0.1	0.1
NONCONTROL.	LEAD, mm[2]		2.9	2.6	2.3	2.65	1.75	1.5	1.2	0.95	0.75	0.55	0.35
CONTROLLED	CONC., cm[3]		18	15.5	13.5	11.5	9.5	7	5.5	4	2.5	1.5	0.5
NONCONTROL.	CONC., cm[3]		25	23	20.5	18.5	16.5	14	12	10	8	6	4
			SECONDARY BARRIER THICKNESS[4]										
CONTROLLED	LEAD, mm[2]		0.55	0.45	0.35	0.3	0	0	0	0	0	0	0
NONCONTROL.	LEAD, mm[2]		1.3	1.05	0.75	0.55	0.45	0.35	0.3		0	0	0
CONTROLLED	CONC., cm[3]		5	3.5	2.5	2	0	0	0	0	0	0	0
NONCONTROL.	CONC., cm[3]		11.5	9.5	7.5	5.5	4	3	2	0.5	0	0	0

[1] *W – Workload in mA-min/week, U – use factor, T – occupancy factor.*
[2] *See table 4 for conversion of thickness in millimeters to inches.*
[3] *Thickness based on concrete density of 2.35 g/cm[3] (147 lb/ft[3]).*
[4] *Barrier thickness based on a peak tube potential of 150 kVp.*

Source: Management and control of Diagnostic X-Ray, Therapeutic X-ray, and Gamma-Beam equipment, TB MED 521.

Table 2. Minimum shielding requirements for fluoroscopic x-ray facilities.

WT* in mA-min/week			DISTANCE IN FEET (METERS) FROM SOURCE (X-RAY TUBE TARGET) TO OCCUPIED AREA										
100 kVp	125 kVp	150 kVp											
2000	800	400	5 (1.5)	7 (2.1)	10 (3.0)	14 (4.2)	20 (6.1)	28 (8.4)	40 (12.2)				
1000	400	200		5 (1.5)	7 (2.1)	10 (3.0)	14 (4.2)	20 (6.1)	28 (8.4)	40 (12.2)			
500	200	100			5 (1.5)	7 (2.1)	10 (3.0)	14 (4.2)	20 (6.1)	28 (8.4)	40 (12.2)		
250	100	50				5 (1.5)	7 (2.1)	10 (3.0)	14 (4.2)	20 (6.1)	28 (8.4)	40 (12.2)	
125	50	25					5 (1.5)	7 (2.1)	10 (3.0)	14 (4.2)	20 (6.1)	28 (8.4)	40 (12.2)
62.5	25	12.5						5 (1.5)	7 (2.1)	10 (3.0)	14 (4.2)	20 (6.1)	28 (8.4)
31	12	6							5 (1.5)	7 (2.1)	10 (3.0)	14 (4.2)	20 (6.1)
AREA TYPE	MATERIAL		SECONDARY BARRIER THICKNESS										
CONTROLLED	LEAD, mm		0.75	0.6	0.45	0.35	0.3	0.05	0	0	0	0	0
NONCONTROL.	LEAD, mm		1.6	1.3	1.05	0.75	0.6	0.45	0.4	0.25	0.25	0	0
CONTROLLED	CONC., cm		7.5	5.5	4	3	2.5	0.5	0	0	0	0	0
NONCONTROL.	CONC., cm		14	12	10	8	6	4.5	3.5	2.5	2.5	0.5	0

* *W – Workload in mA–minweek, T – occupancy factor.*

Source: Management and control of Diagnostic X-Ray, Therapeutic X-ray, and Gamma-Beam equipment, TB MED 521.

Table 3. Summary of shielding requirements for diagnostic x-ray facilities.

BARRIER *	TYPE OF FACILITY								
	FLUOROSCOPIC ONLY	FIXED RADIO-GRAPHIC & RADIOGRAPHIC FLUOROSCOPIC	PHOTOFLUORO-GRAPHIC & UPRIGHT CHEST	UROLOGIC ONLY	DENTAL MAXIMUM TUBE POTENTIAL (kV)				VET.
					40-50	51-60	61-75	75	
FLOOR	1/16	1/16	1/32	1/16	1/128	1/64	1/32	1/16	1/16
WALL (PRIM. BARRIER)	N/A	1/16	1/16	1/32	1/128	1/64	1/32	1/16	1/16
WALL (SECOND. BARRIER)	1/16	1/16	1/32	1/32	1/128	1/64	1/32	1/16	1/16
CEILING	1/32	1/16	1/32	1/32	1/128	1/64	1/32	1/16	1/16
CONTROL BOOTH	1/16	1/16	1/16	1/32	1/128	1/64	1/32	1/16	1/16
OBSERVATION WINDOW	1/16	1/16	1/32	1/32	1/128	1/64	1/32	1/16	1/16
DOOR	1/16	1/16	1/16	1/32	1/128	1/64	1/32	1/16	1/16

* *All shielding requirements are given in inches of lead or equivalent.*

Note: Consideration should be given to actual workload, occupancy, and use factors when applying the above criteria.

Source: Management and control of Diagnostic X-Ray, Therapeutic X-ray, and Gamma-Beam equipment, TB MED 521.

Table 4. Lead shielding conversions.

THICKNESS			APPROXIMATE WEIGHT
MILLIMETERS	INCHES	DECIMAL INCHES	POUND/FT[a]
0.20	1/128	0.0078	0.5
0.40	1/64	0.0156	1.0
0.60	3/128	0.0234	1.5
0.79	1/32	0.0313	2.0
1.00	5/128	0.0391	2.5
1.19	3/64	0.0469	3.0
1.39	7/128	0.0547	3.5
1.58	1/16	0.0625	4.0
1.98	5/64	0.0781	5.0
2.38	3/32	0.0938	6.0
3.17	1/8	0.1250	8.0
3.97	5/32	0.1563	10.0
4.76	3/16	0.1875	12.0
5.56	7/32	0.2187	14.0
6.35	1/4	0.2500	16.0
7.14	9/32	0.2813	16.5
7.94	5/16	0.3125	18.0
8.47	1/3	0.3333	20.0
8.73	11/32	0.3834	20.5
9.53	3/8	0.3750	22.0
10.76	2/5	0.4000	24.0
11.11	7/16	0.4375	26.0
12.70	1/2	0.5000	30.0
14.29	9/16	0.5625	33.0
15.88	5/8	0.6250	37.0
16.93	2/3	0.6667	40.0
17.46	11/16	0.6875	41.0
19.05	3/4	0.7500	45.0
20.64	13/16	0.8125	48.0
22.23	7/8	0.8750	52.0
23.81	15/16	0.9375	55.0
25.40	1	1.000	60.0

Source: Management and control of Diagnostic X-Ray, Therapeutic X-Ray, and Gamma-Beam equipment, TB MED 521.

of different thicknesses can be bonded under pressure to plywood, gypsum plaster lath, gypsum wall board, aluminum, or steel. Lead panels can be fastened with common nails or common screws that are covered with a lead tab, grommet, and/or a lead disk depending on whether the studs or furring strips are wood or metal. See figure 1 for details.

a. Lead-lined wallboard. Lead-lined wallboard consists of a sheet of unpierced lead laminated to gypsum wallboard. The standard wallboard size is 1/2 or 5/8 inch thick, 48 inches wide, and 96 inches long. See figure 2 for jointing details.

(1) Pilot holes for lead-headed nails are predrilled or field drilled as necessary to prevent deformation of the lead-headed nail and distortion of the wallboard.

(2) Wallboard is applied with long edges parallel to supports and with lead linings placed next to supports. Blocking is provided at end joints. Sheet-lead strips not less than the thickness used on the wallboard and not less than 1-1/2 inches wide are installed on blocking and supports where joints occur. The lead strips are secured to blocking and supports with wire nails at outer edges of strips. Edges of the wallboard are butt-jointed and nailed to supports with nails at approximately 8 inches on centers at joints and 12 inches on centers at intermediate supports. The nails are driven slightly below the surface of the wallboard and then covered with a 5/16-inch diameter lead disk. Lead disks are covered by tape or spackling to hold them in place.

(3) When using screws to attach wallboard to metal studs, they must be 1 inch long and used at the edges of the board. Heads of screws are covered with a 1/2-inch diameter lead disc cemented to wallboard and made flush with the surface of the wallboard.

(4) When using two layers of wallboard, the finish ply is to be bonded to the first ply with a laminating adhesive that is applied following the manufacturer's recommendations. First ply of wallboard is nailed to supports with a nail covered with a 5/8-inch diameter lead disk. Nailing of the finish ply will not be permitted. A shoring system will be used to hold the finish ply in place until the adhesive dries; a minimum of 24 hours.

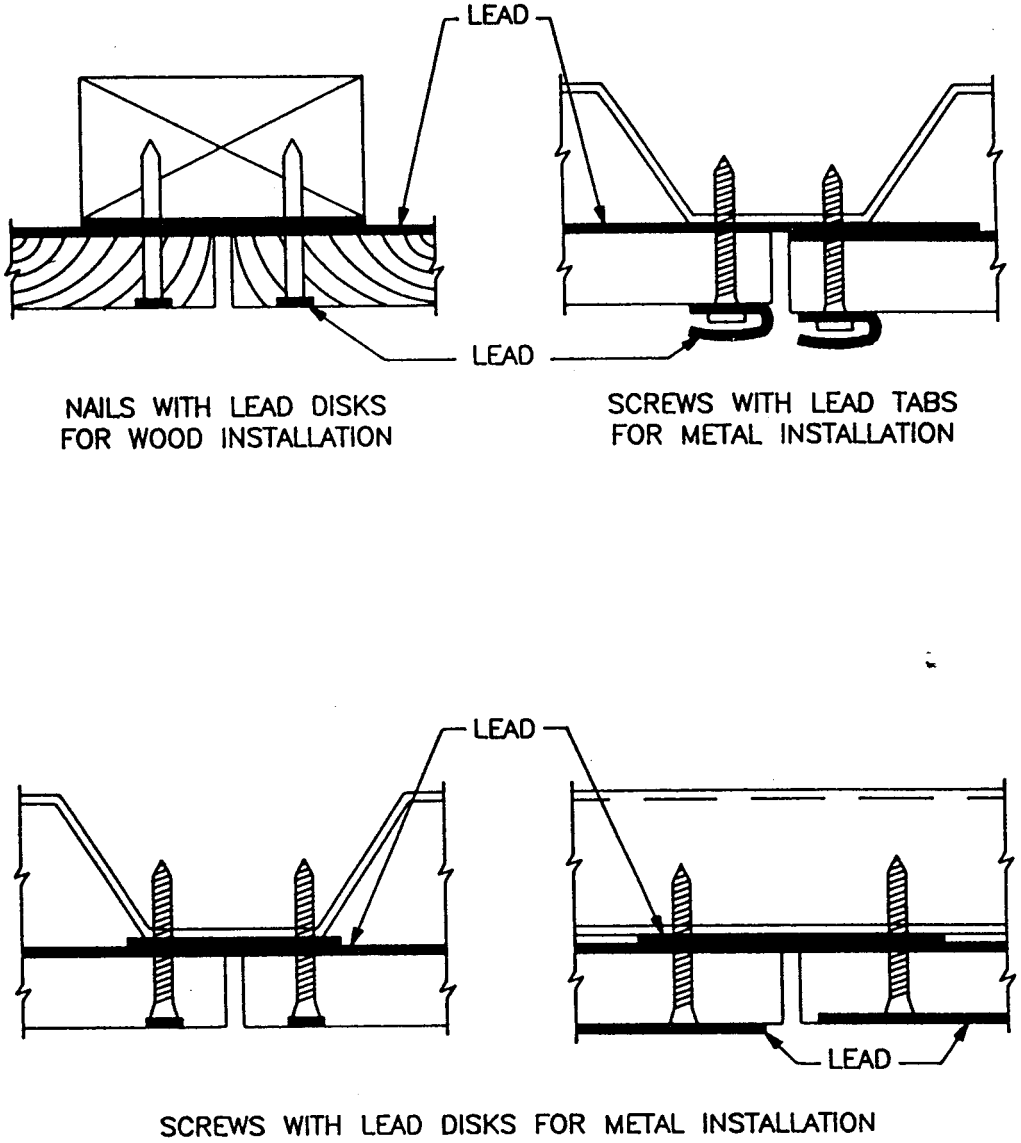

Figure 1. Fastening methods.

b. Lead-lined lath. Lead-lined lath consists of a sheet of unpierced lead laminated to perforated gypsum plaster lath. For lead sheets up to 8.0 millimeters thick (light lead), the standard lath size is 3/8 inch thick, 16 by 48 inches, with a single thickness of sheet lead 17 by 49 inches that is laminated so that the lead extends 1 inch beyond one longside and one shortside of the unit. For lead sheets 8.0 millimeters and over (heavy lead), the standard lath size is 3/8 inch thick, 12 by 48 inches, with single thickness of sheet lead 12 by 48 inches. See figure 3 for jointing details. Supports for heavy lead-lined lath are 12 inches on centers.

(1) Pilot holes for nails are predrilled or field drilled as necessary to prevent deformation of the nail and distortion of the lath.

(2) Light lead-lined lath can be installed by one of the following methods:

(*a*) Lead-lined lath can be applied with long edges at right angles to supports and with lead linings placed next to the supports. End joints are placed over supports and staggered in alternate courses. Wall joints will not coincide with ceiling joints. Each sheet will overlap the lead extension on the adjacent sheet, providing an effective lead lap.

(*b*) Lead-lined lath can be applied with long edges parallel to supports and with lead linings placed next to supports. Blocking is provided at end joints. Sheet-lead strips not less than the thickness used for the lath and not less than 1-1/2 inches wide are applied on blocking and on supports where joints occur. The lead strips are secured to blocking and supports by nailing with wire nails at outer edge of strips.

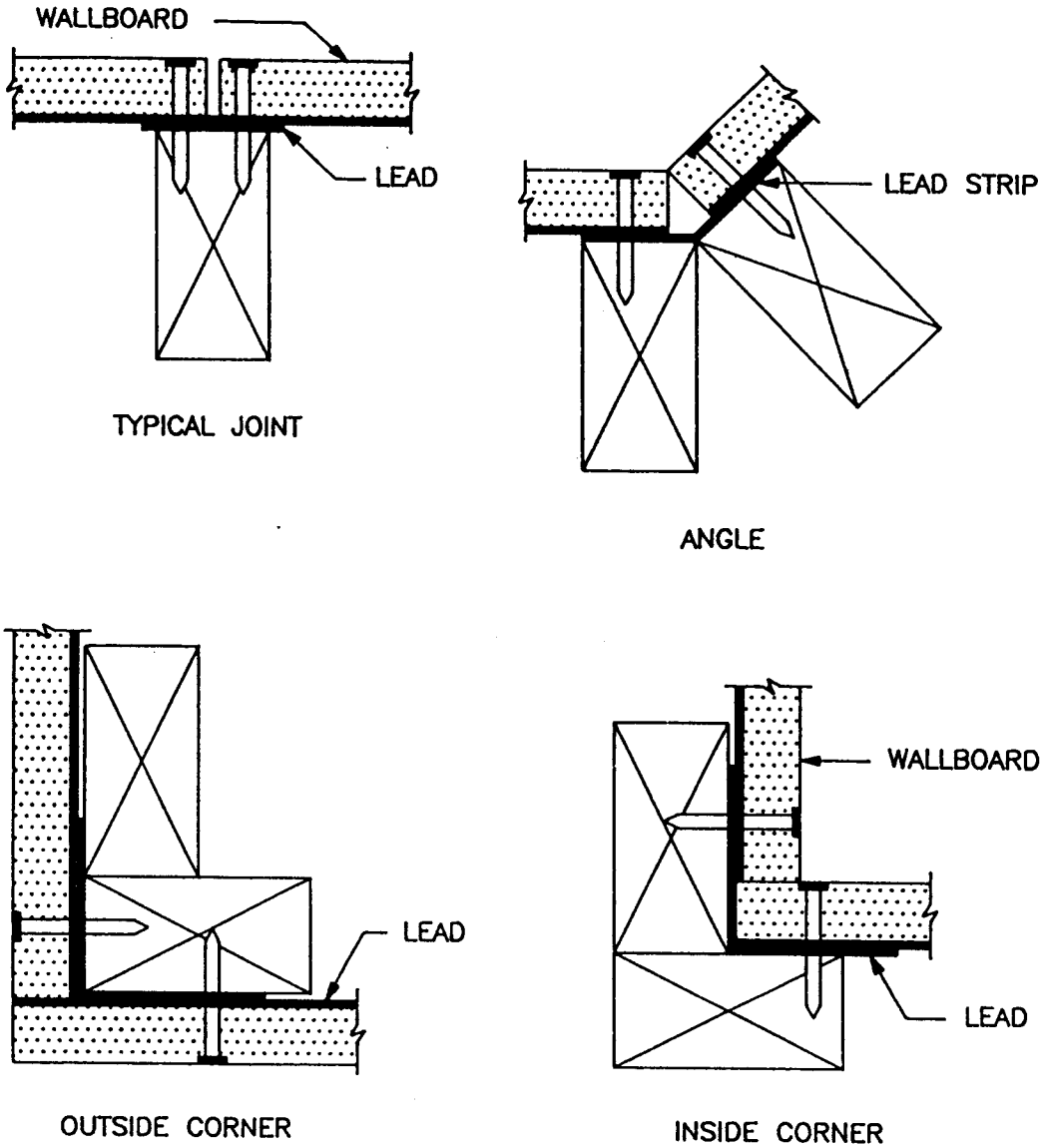

Figure 2. Wallboard.

(3) Heavy lead-lined lath is installed at right angles to supports and with lead linings placed next to supports. Blocking is provided at all joints where there are no supports. Sheet-lead strips not less than the thickness used for the lath and not less than 1-1/2 inches wide are applied on blocking and supports where joints occur. The lead strips are secured to blocking and supports by nailing with wire nails at outer edge of strips.

(4) The lath must be close fitted and uniformly secured to supports and must extend into frame openings, effectively lapping with the lead frames or frame linings. Unless otherwise approved, lath is arranged around openings such that neither horizontal nor vertical joints occur at corners of openings. External corners are reinforced with corner beads. Internal corners, except at unrestrained suspended ceilings, are reinforced as required by manufacturer and installed with nails or tie wire and lead clips. At unrestrained ceilings, square-nosed casing beads are installed at junction of wall and suspended ceilings.

(5) The lath is uniformly nailed or secured with tie wire to supports at approximately 7 inches on centers. All penetrations of the lead linings by wire or nails must be effectively covered with lead clips.

c. *Lead-lined panels.* Lead-lined panels consist of a sheet of unpierced lead laminated to a sheet of fir plywood. The standard panel size is 3/8 inch thick, 4 feet by 7 feet, unless otherwise indicated. See figure 4 for details.

(1) Pilot holes for nails will be predrilled or field drilled as necessary to prevent deformation of the nail and distortion of the panel.

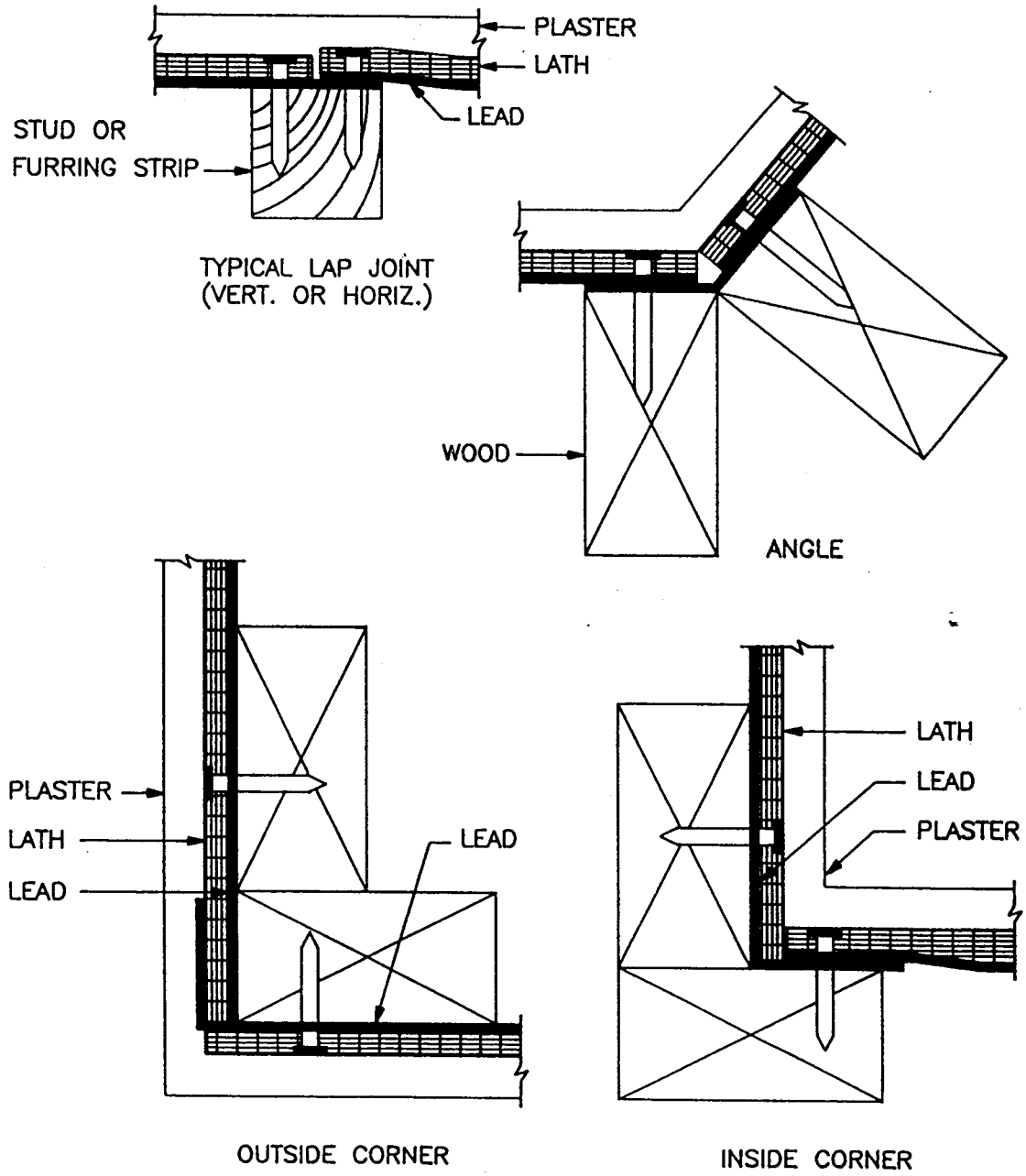

Figure 3. Lath.

(2) Lead-lined panels will be butt-jointed with all joints placed over supports and with lead linings placed next to supports. Lead laps at corners and around frames of openings will be made with panels having lead extensions or with sheet-lead strips not less than the thickness of the lead in the panel.

(3) At intermediate supports, panels are nailed in a uniform pattern at approximately 16 inches on centers by nails covered with 5/16-inch lead disks and wood putty, or by finishing nails where supports are covered by not less than a 1-1/2-inch wide lead strip. Nailing at joints conforms to one of the following methods.

(a) Joints with lead-lined joint strips. This method is used primarily with unfinished plywood. Sides and ends of panels will be nailed at approximately 8 inches on centers with wire nails long enough to penetrate the support or furring members. Joints are covered with a 2-inch wide lead-lined joint strip of the same material as the panel. The joint strips are secured with nails approximately 8 inches on centers that penetrate into the support and are covered with a lead disk and wood putty or, with nails that penetrate joint strip and plywood but not the lead-lining of the panel. Where indicated, quarter-round strips of the same finish as the panels are installed adjacent to joint strips and secured by nailing with wire nails to joint strips without penetrating the lead.

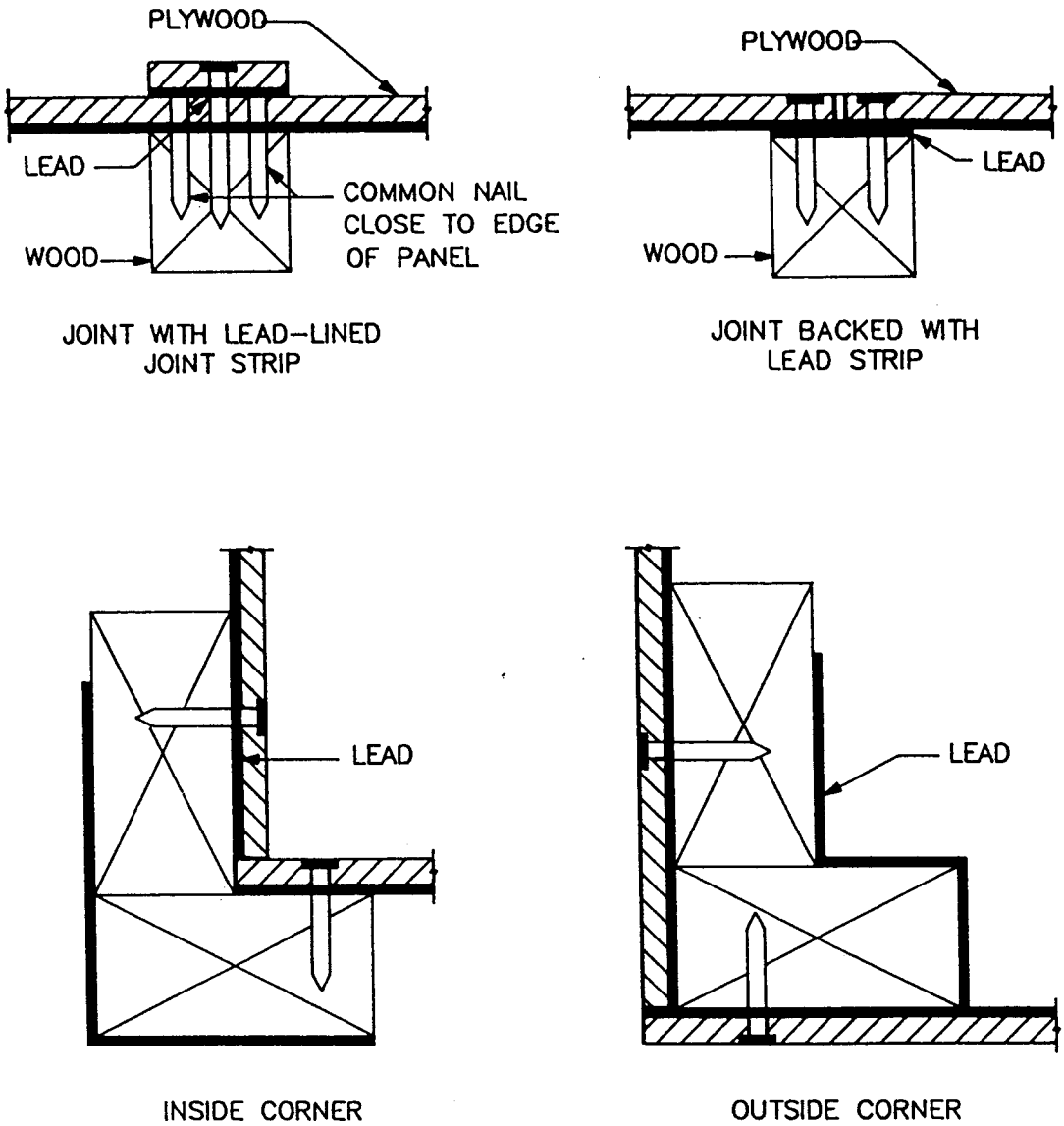

Figure 4. Plywood panels.

(b) Joints backed with lead strips. Sheet-lead strips not less than the thickness used for the panels and not less than 1-1/2 inches wide are installed on supports where panel joints occur. The lead strips are secured to supports by nailing with wire nails at outer edges of strips. Sides and ends of panels are nailed at approximately 8 inches on centers with finishing nails. If plywood panel is unfinished, the joint shall be covered with a molding strip and shall be secured using finish nails at approximately 8 inches on centers.

(4) The face veneer of the panel will be finished using varnish, lacquer, or other coating system as specified, to be applied after installation.

d. Suspended lead-lined ceilings. Suspended lead-lined ceilings for lead thickness up to 9.0 millimeters consist of lead-lined lath 16 by 48 inches resting on continuous lead-lined channels spaced 16-1/2 inches on centers. For lead thickness over 9.0 millimeters, ceilings consist of lead-lined lath 12 by 32 inches resting on continuous lead-lined channels spaced 12-1/2 inches on centers. Lead extends 1 inch beyond lath on one end to provide a lap with adjacent lead-lined lath unit. See figure 5 for details.

(1) Lead-lined furring channels are supported by galvanized steel hangers spaced 12 inches on center that are attached to steel support channels. Metal lath is attached to underside of lead-lined channels either through prepunched holes in the channels, or clips attached to the hangers.

(2) Lead in suspended ceiling laps the lead in the wall a minimum of 1-1/2 inches to provide an effective lead lap.

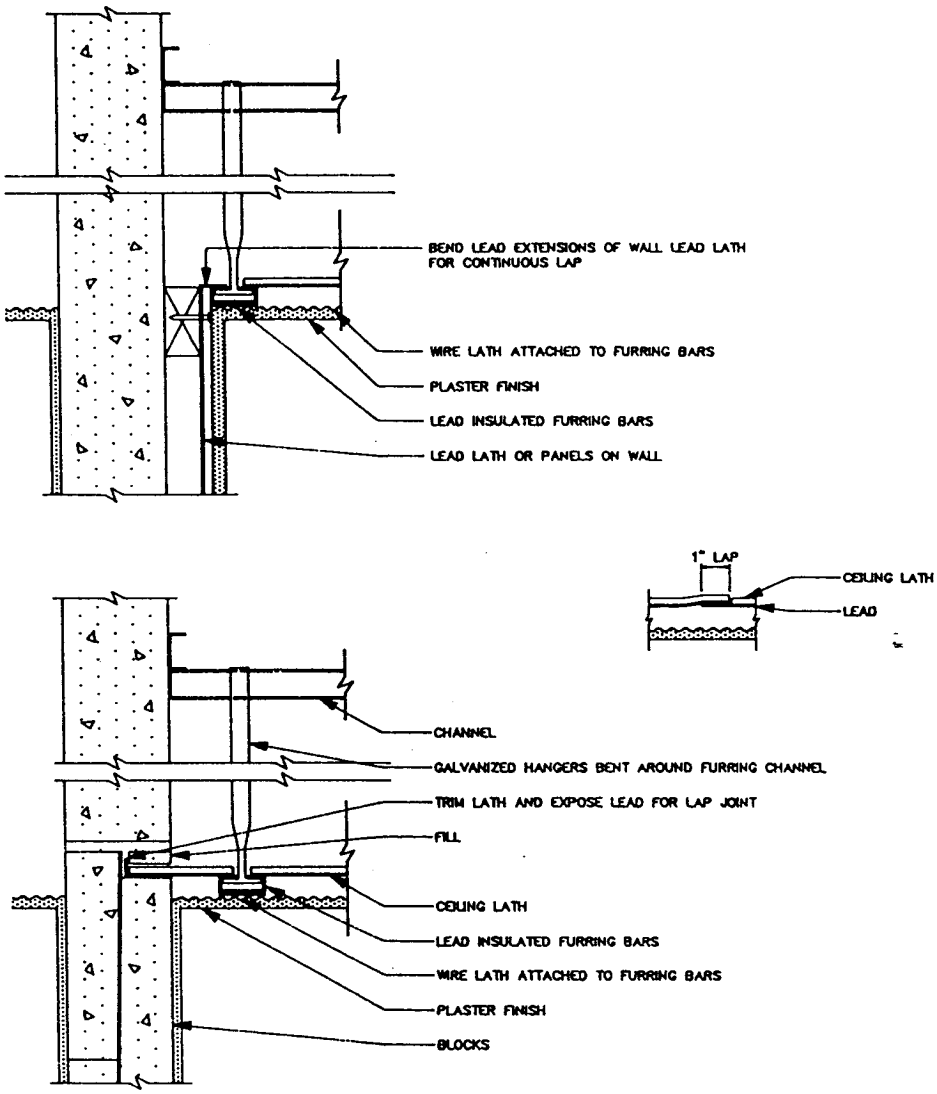

Figure 5. Suspended lath ceiling.

e. Lead-lined blocks. Lead-lined blocks, also called leadcore blocks, consist of an unpierced sheet of lead bonded in the center of a block of lightweight aggregate and concrete. Block sizes will be 12 by 12 by 4 inches for lead thickness less than 6.0 millimeters, and 12 by 12 by 6 inches for lead thickness over 6.0 millimeters, with enough half-blocks for proper bonding of the wall. The blocks are an interlocking lock-joint and self-aligning type. Blocks designed to have lead laps at joints are erected in a manner that provides a minimum 1 inch tight lap without soldering or burning. Heavy lead-lined blocks, with a lead thickness from 9.0 millimeters to 20.0 millimeters, or heavier are used for high-energy radiation shielding. The heavy lead-lined blocks are designed to receive a lead bar, of the same thickness of lead used in blocks, horizontally and vertically at all joints to provide an effective lead lap with adjoining blocks. See figures 6 and 7 for details.

(1) Where the floor is lead-lined, the first course of blocks is laid on lead strips at least 7 inches wide and will project at least 3 inches inside the partition. Starter blocks are required when the sheet lead that is cast in the center of the block is over 6.0 millimeters thick. Lead-lined blocks are installed in courses with staggered vertical joints. A maximum 1/2-inch mortar joint is allowed. Mortar between lead laps is not permitted.

(2) The lead-lined blocks with a lead thickness less than 9.0 millimeters will have rabbetted edges formed by off-setting slabs on opposite sides of the lead. The lead is exposed on all sides to provide a 1-inch lap at all joints when installed.

Pace Analytical

Pace Analytical Services, Inc.
1700 Elm Street - Suite 200
Minneapolis, MN 55414
Tel: 612-617-6400
Fax: 612-617-6444

Pace Project Number: 1010337
Client Project ID: 806-85045.Consolidate Facility

Pace Sample No: 10899771 Date Collected: 10/17/98 Matrix: Soil
Client Sample ID: B6 S3 (4-6') Date Received: 10/20/98

Parameters	Results	Units	PRL	Analyzed	Analyst	CAS#	Footnotes
GC/MS -- VOA							
GC/MS VOCs by 8260		Method: EPA 8260			Prep Method: EPA 8260		
Dichlorodifluoromethane	ND	ug/kg	10	10/28/98	TAW	75-71-8	
Chloromethane	ND	ug/kg	5	10/28/98	TAW	74-87-3	
Vinyl Chloride	ND	ug/kg	5	10/28/98	TAW	75-01-4	
Bromomethane	ND	ug/kg	5	10/28/98	TAW	74-83-9	
Chloroethane	ND	ug/kg	5	10/28/98	TAW	75-00-3	
Trichlorofluoromethane	ND	ug/kg	5	10/28/98	TAW	75-69-4	
Methylene Chloride	ND	ug/kg	5	10/28/98	TAW	75-09-2	
1,1-Dichloroethene	ND	ug/kg	5	10/28/98	TAW	75-35-4	
trans-1,2-Dichloroethene	ND	ug/kg	5	10/28/98	TAW	156-60-5	
1,1-Dichloroethane	ND	ug/kg	5	10/28/98	TAW	75-34-3	
2,2-Dichloropropane	ND	ug/kg	5	10/28/98	TAW	594-20-7	
cis-1,2-Dichloroethene	ND	ug/kg	5	10/28/98	TAW	156-59-2	
Chloroform	ND	ug/kg	5	10/28/98	TAW	67-66-3	
Bromochloromethane	ND	ug/kg	5	10/28/98	TAW	74-97-5	
1,1,1-Trichloroethane	ND	ug/kg	5	10/28/98	TAW	71-55-6	
Carbon Tetrachloride	ND	ug/kg	5	10/28/98	TAW	56-23-5	
1,1-Dichloropropene	ND	ug/kg	5	10/28/98	TAW	563-58-6	
Benzene	ND	ug/kg	5	10/28/98	TAW	71-43-2	
1,2-Dichloroethane	ND	ug/kg	5	10/28/98	TAW	107-06-2	
Trichloroethene	ND	ug/kg	5	10/28/98	TAW	79-01-6	
1,2-Dichloropropane	ND	ug/kg	5	10/28/98	TAW	78-87-5	
Bromodichloromethane	ND	ug/kg	5	10/28/98	TAW	75-27-4	
Dibromomethane	ND	ug/kg	5	10/28/98	TAW	74-95-3	
trans-1,3-Dichloropropene	ND	ug/kg	5	10/28/98	TAW	10061-02-6	
Toluene	ND	ug/kg	5	10/28/98	TAW	108-88-3	
cis-1,3-Dichloropropene	ND	ug/kg	5	10/28/98	TAW	10061-01-5	
1,1,2-Trichloroethane	ND	ug/kg	5	10/28/98	TAW	79-00-5	
Tetrachloroethene	ND	ug/kg	5	10/28/98	TAW	127-18-4	
1,3-Dichloropropane	ND	ug/kg	5	10/28/98	TAW	142-28-9	
Dibromochloromethane	ND	ug/kg	5	10/28/98	TAW	124-48-1	
1,2-Dibromoethane	ND	ug/kg	5	10/28/98	TAW	106-93-4	
Chlorobenzene	ND	ug/kg	5	10/28/98	TAW	108-90-7	
1,1,1,2-Tetrachloroethane	ND	ug/kg	5	10/28/98	TAW	630-20-6	
Ethylbenzene	ND	ug/kg	5	10/28/98	TAW	100-41-4	
Xylene (Total)	ND	ug/kg	5	10/28/98	TAW	1330-20-7	
Styrene	ND	ug/kg	5	10/28/98	TAW	100-42-5	

REPORT OF LABORATORY ANALYSIS

This report shall not be reproduced, except in full,
without the written consent of Pace Analytical Services, Inc.

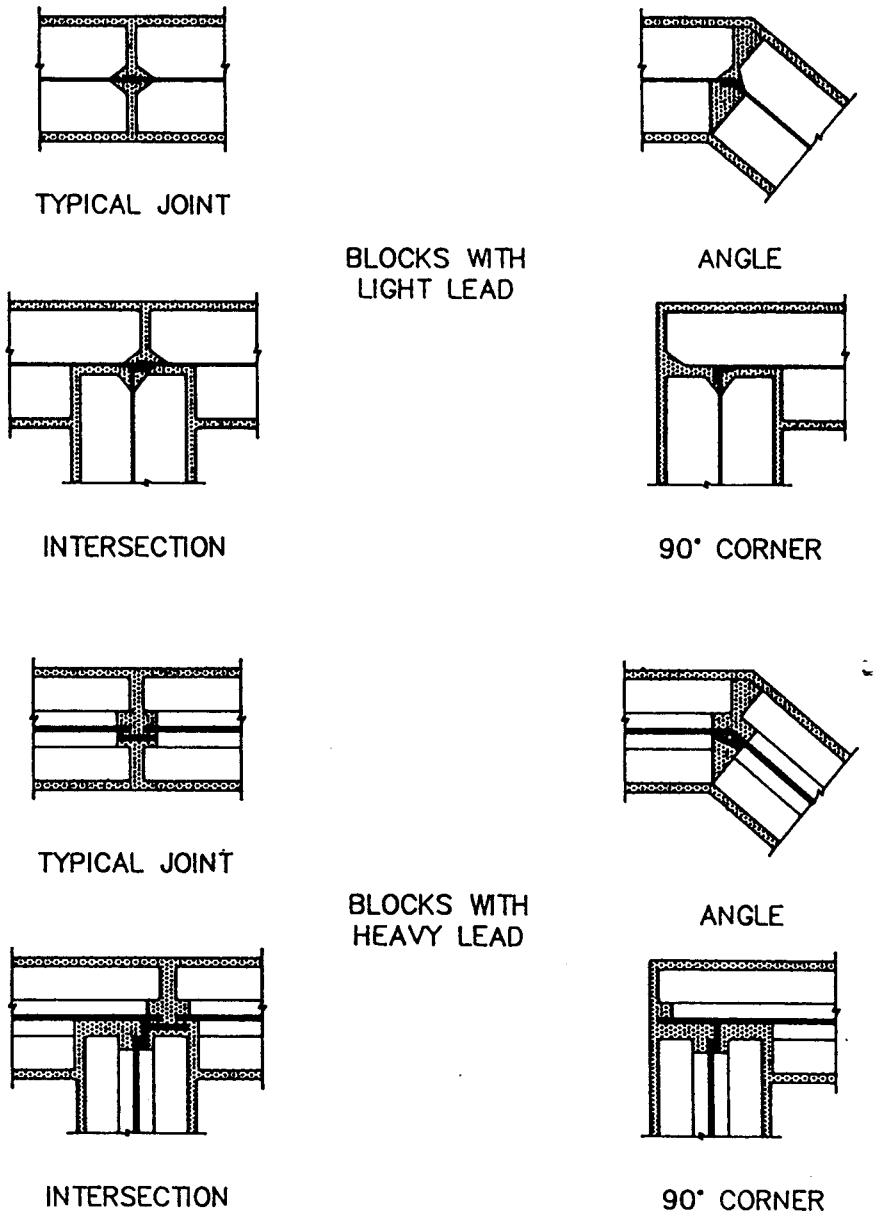

Figure 7. Blocks (heavy lead-lined).

(1) Sheet-lead strips are laid under lead-lined partitions and project inside the exposure room to provide a minimum of 1-1/2-inch lap with the floor sheet lead. Sheet lead up to 3.0 millimeters thick placed on the floor will have a 1-1/2-inch lap with adjacent sheets. Floor sheet lead over 3.0 millimeters thick is applied in two or more layers 3.0 millimeters or less in thickness with 1-1/2-inch minimum lap at all joints, or in a single layer with all joints butted and covered with a 3-inch lead strip not less than the thickness of the floor sheet lead. See figure 8 for details.

(2) Where lead-lined thresholds are not required, the lead strip under the partitions previously described herein, is continued at the door sill opening. The strip shall be at least 12 inches wider than each door jamb opening and extended 12 inches beyond the door jamb opening. See figure 9 for details.

(3) When the floor slabs above the exposure room are scheduled to receive sheet lead, the entire area so designed must be covered with sheet lead, in the same manner previously described herein for floor lead. Sheet lead shall extend to a minimum of 12 inches beyond the centerline of the lead-lined partitions located in the room below.

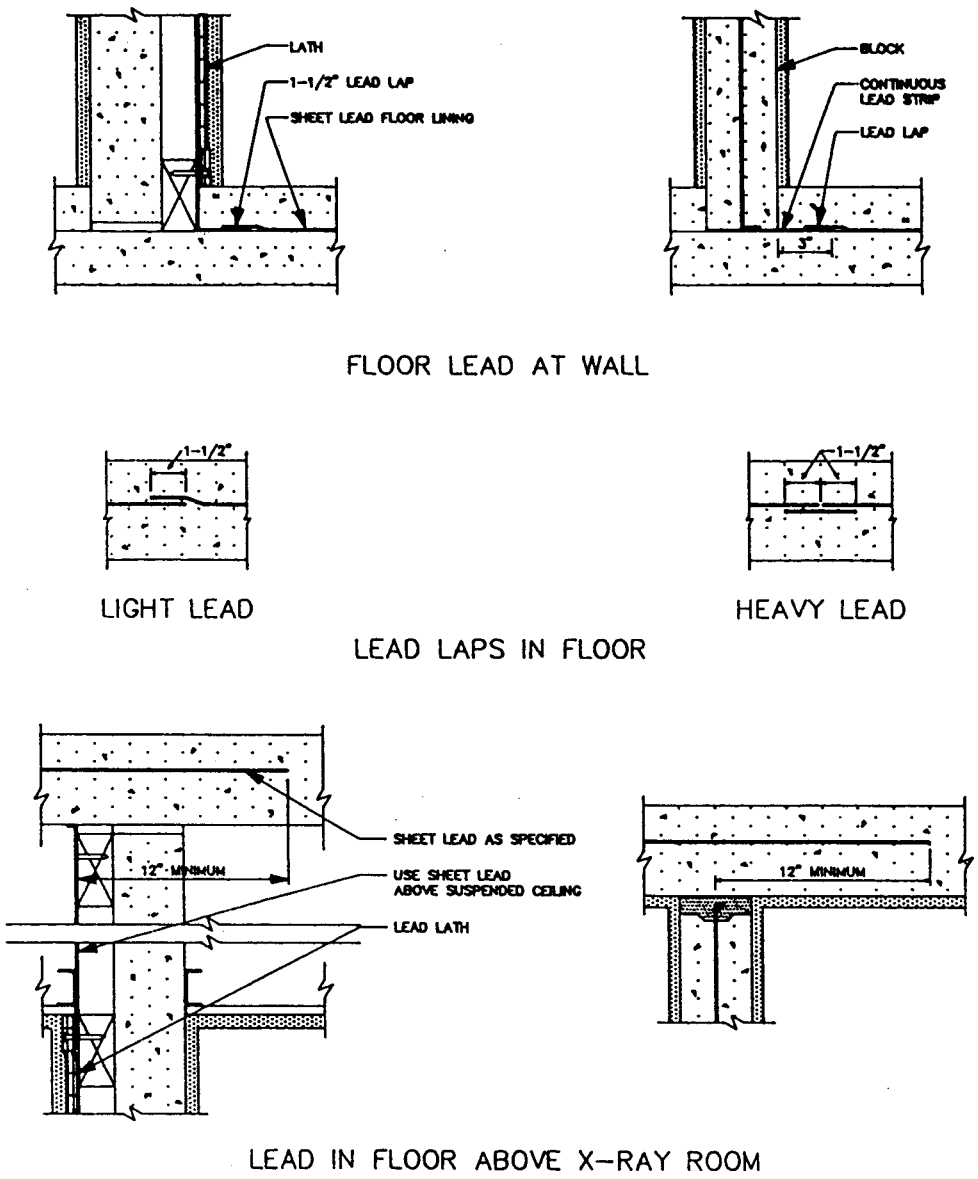

Figure 8. Floor lead.

9. Lead-lined doors and accessories.

The number of lead or lead-lined items can be extensive. The list can include control window frames, speaking grills, louvers, control screens, transfer cabinets, hanger pass boxes, door frames, locksets, and dead locks. Listed below are some of the available lead-lined items, including leaded glass.

a. Lead-lined doors. Lead-lined doors are a solid wood core or hollow metal flush type door.

(1) Solid wood core doors consist of two solid wood cores with a lead sheet between, of the same thickness of lead in the partition that the door is a part of, fastened together using steel bolts 1-1/2 inches from the edges of the door and spaced at 8 inches on centers vertically and horizontally within the door. The bolts are countersunk in the wood core with poured lead or lead dowels placed over the heads and nuts until flush with the face of the core. The door is crossbonded, veneer is applied, and hardwood edge strips are provided to match the face veneer. Wood doors requiring hardware are mortised on the jobsite.

(2) Hollow metal doors are fabricated of 16-gauge steel with a sheet-lead core the full size of the door, supported by 16-gauge steel brackets that prevent the lead from cold flowing or sagging. The metal exterior of the door is painted with a shop coat of primer for on-site finishing to match other colors. Openings for hardware are factory prepared.

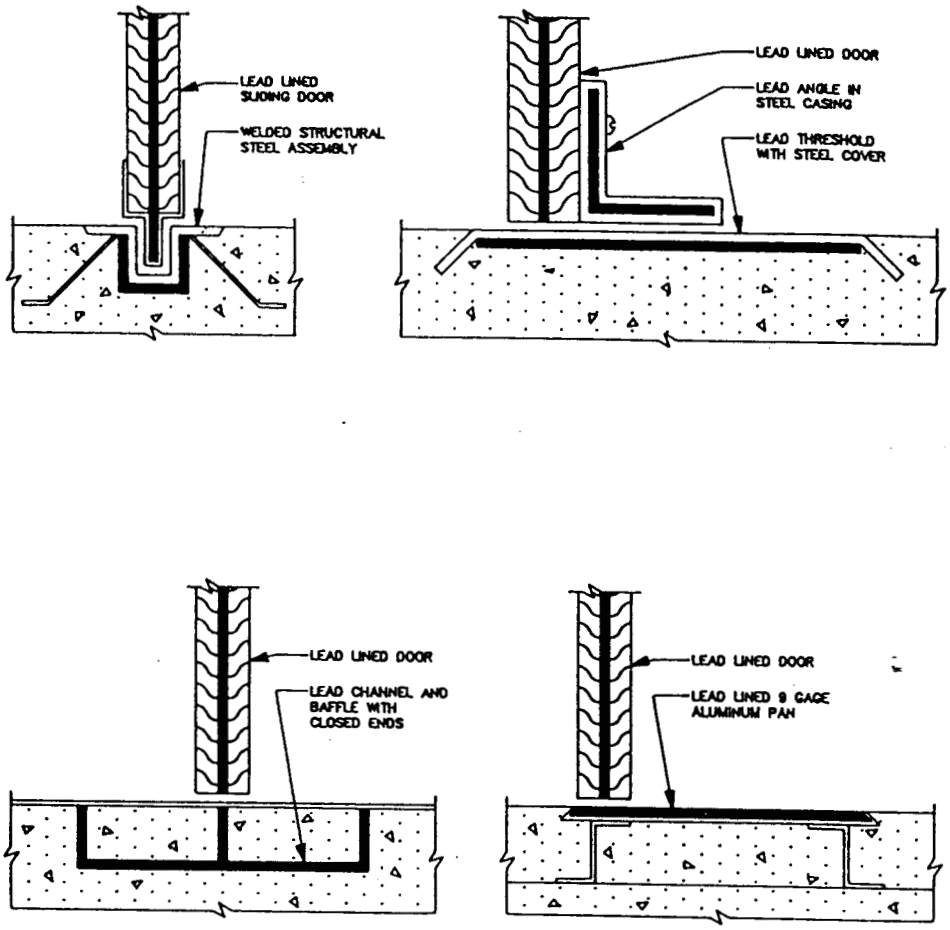

Figure 9. Lead door threshold.

(3) The door hardware is installed on the job at the time the doors are fitted in the frames. Recesses for lock-sets are lined with lead butted tightly against the door lead. See figures 10 and 11 for details.

(4) When openings for glass viewing windows or louvers are specified, the lead in the door is extended 3/8 inch into all sides of the opening and overlaps with the lead viewing panel or lead louver. A matching veneer molding is installed around the viewing panel or louver openings.

b. Louvers. Lead light-proof louvers are constructed of overlapping channel shapes arranged so as to be photographically light-proof yet allow at least 30 percent free area for air circulation. The lead must be thick enough to provide protection equivalent to the lead in the door or wall in which the louver is located.

c. Control window frames. Frames will be constructed to form a minimum 3/8-inch overlap in all points of the perimeter of the lead viewing panel. The frame is glazed in the field. See figure 12 for details.

(1) Solid extruded lead frames are splayed 45 degrees on four sides for wide-angle viewing, with a lead thickness of at least 3/16 inch. The depth of the control window is normally 5-1/2 inches. Where the overall wall thickness exceeds this depth, the frame is set in the wall as required to suit the job requirements. The frame is glazed with leaded glass held in place with a one-piece removable lead stop.

(2) Hollow metal lead-lined telescoping frames are constructed of minimum 18-gauge steel that is lead-lined to afford the same x-ray protection as the wall in which it is located. The frame consists of two overlapping sleeves capable of adjusting to the proper wall thicknesses. Once the sleeves have been adjusted to the proper wall thickness, they are fixed in place with screws.

(3) Aluminum lead-lined frames are constructed of extruded aluminum alloy with a concealed lead lining. A baffled voice passage at the sill is an integral part of the window. All four sides are splayed 45 degrees on the x-ray room side. The aluminum surfaces have an anodized aluminum natural finish. The frame is glazed with leaded glass of the required size.

d. Leaded glass. The leaded glass is a clear lead glass sheet approximately 1/4 inch thick and is installed in single or multiple thicknesses to provide a lead equivalent not less than that of the partition or door of which it is a part. Glass sizes vary from 12 by 10 inches to 36 by 60 inches.

LEAD THICKNESS.	DOOR THICKNESS
1.5 mm to 3.0 mm	1-7/8"
3.0 mm to 6.5 mm	2"
6.5 mm to 9.5 mm	2-1/4"
9.5 mm to 13.0 mm	2-5/8"
13.0 mm to 15.0 mm	2-3/4"

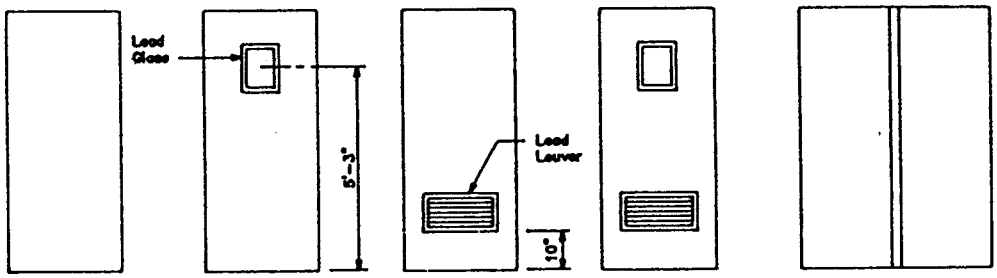

Figure 10. Lead-lined doors.

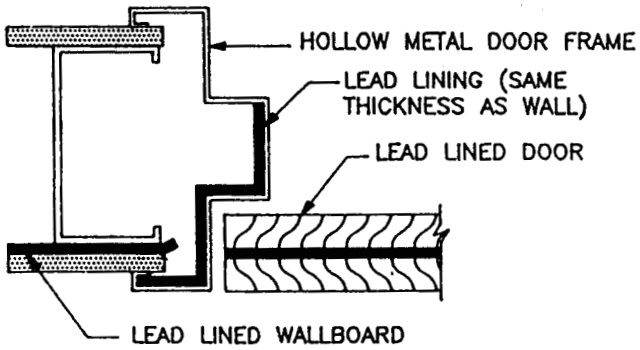

HOLLOW METAL DOOR FRAME

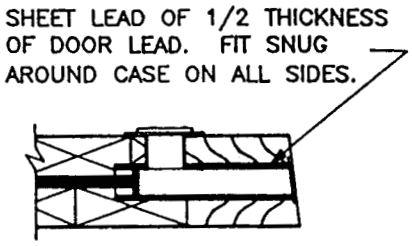

MORTISE DEADLOCK

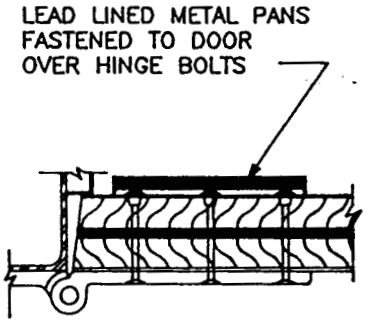

SURFACE HINGE

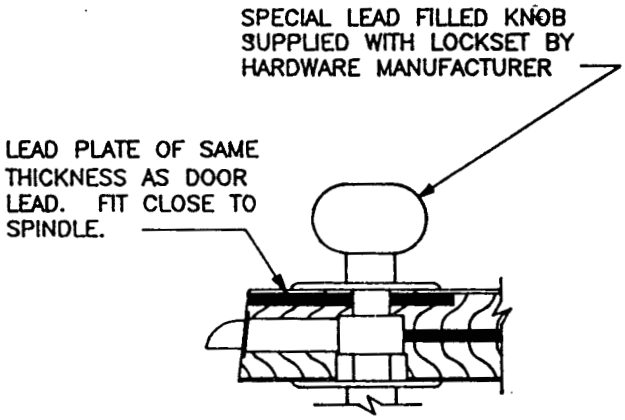

CYLINDRICAL LOCKSET

METHOD OF LEAD LINING DOOR HARDWARE

Figure 11. Door hardware.

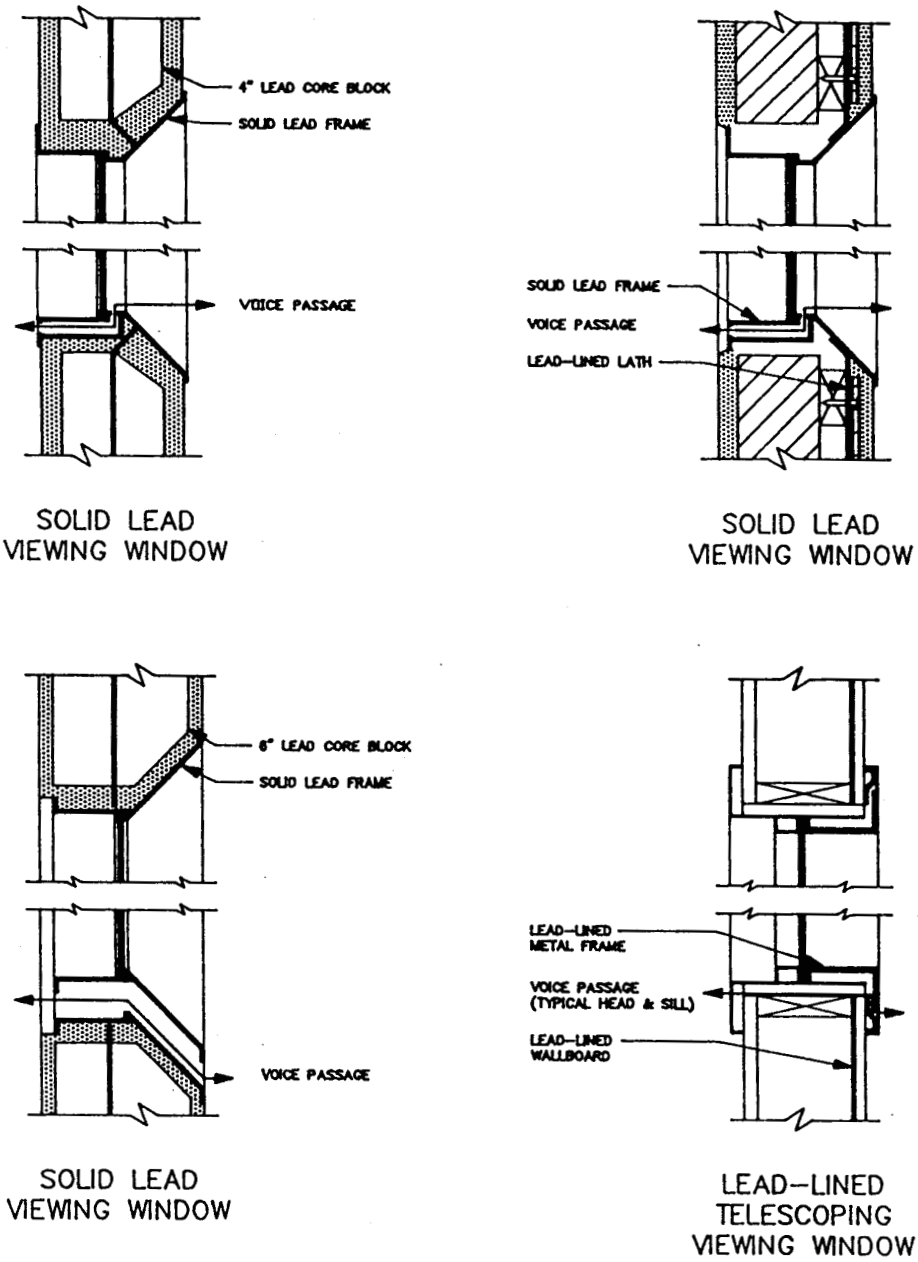

Figure 12. Lead-lined control window frames.

e. Leaded plastic. Leaded plastic is a clear lead-containing plastic sheet that is installed to provide a lead equivalent not less than that of the partitions or door of which it is a part. Leaded plastic sheets provide lead equivalents from 0.3 to 2.0 millimeters thick in sheet thicknesses from 7 to 46 millimeters. Sheets are in sizes up to 72 by 96 inches.

f. Film (cassette) transfer cabinet (pass box). Film cabinets are manufactured from 18-gauge steel with a baked-on finish. The cabinet walls are double wall with sheet lead between for shielding. Cabinets have two compartments with four doors, two on each side equipped with pull knob and locking device arranged so that doors at both ends of the compartment cannot be opened at the same time. When the cabinet is located in lead-lined partitions, the entire cabinet, doors, and integral wall flange must be lined with sheet lead of the same thickness as specified for the wall. Each compartment has a corrugated rubber floor. See figure 13 for details.

g. Operator protective screens. Operator protective screens consist of opaque shielding panels with openings for glass or plastic viewing panels or a modular system of opaqued shielding panels and separate viewing

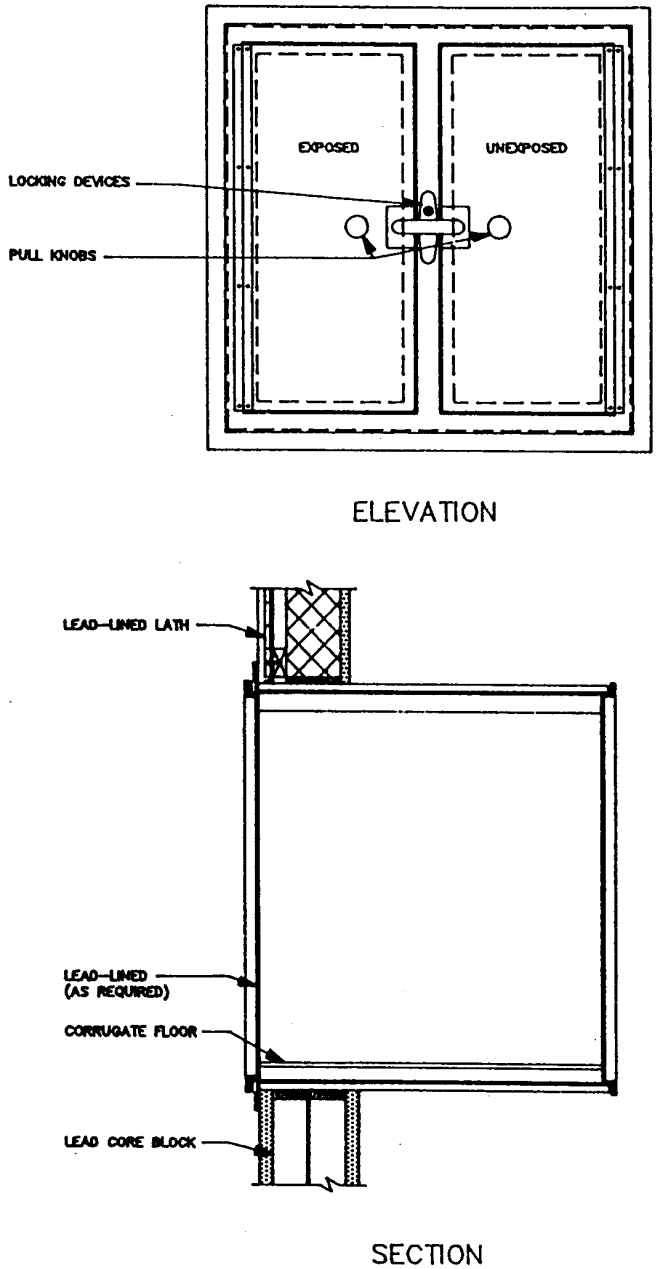

Figure 13. Lead-lined film transfer cabinet.

panels. The opaque shielding panels consist of a single piece of unpierced lead sheet between two panels of plywood, steel, aluminum, or bakelite.

(1) Operator protective screens that consist of opaque shielding panels with openings for viewing panels are factory prepared so that the openings will have a minimum 3/8-inch overlap between the leaded viewing panel and the sheet lead. To provide continuity of shielding when screens are in two or more sections, either the sheet lead extends beyond the panel to overlap the lead of the adjoining panel with a steel trim over the joint for protection, or the joint is covered with lead-lined steel trim. Edges that meet the wall and floor are set in continuous steel channels or receive steel clips on both sides that fasten to the wall or floor. Other exposed edges are provided with steel channel trim. All steel is 16-gauge and painted with a prime coat of black enamel. Plywood screens are sanded ready for finish coating. See figure 14 for details.

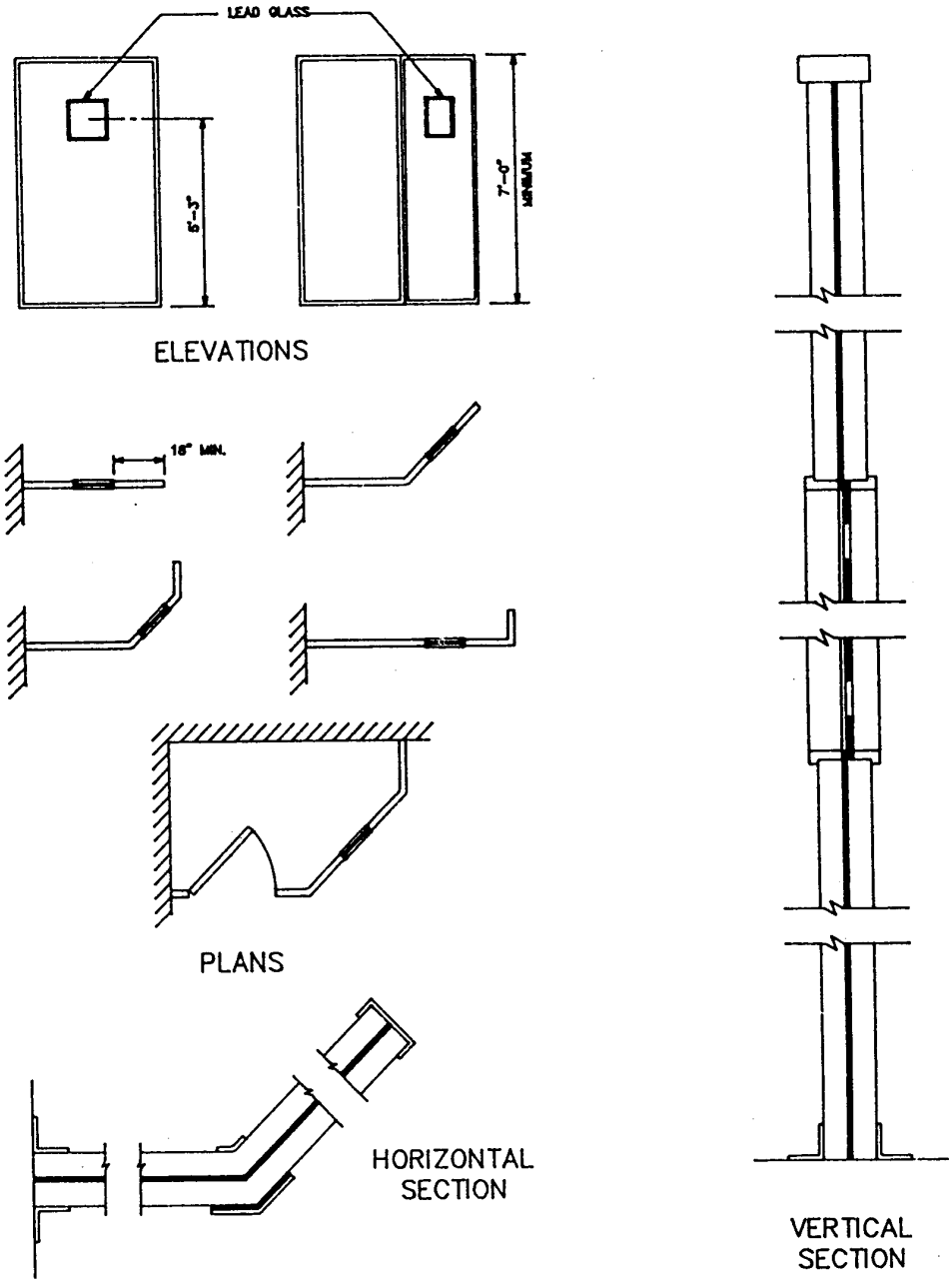

Figure 14. Shapes of lead-lined control-screens.

(2) Modular operator protective screens consist of various sized prefabricated opaque shielding panels, transparent viewing panels, and assembly hardware. To provide continuity of shielding, the panels are installed using steel coupling or end brackets that are lead-lined on the surface of the x-ray source. See figure 15 for details.

h. Voids in protective barriers. Openings in protective barriers for doors, windows, ventilation ducts, conduits, pipes, etc., may require radiation baffles to ensure that the required degree of overall protection is maintained. Two types of protective barriers are used to guard against radiation: primary protective barriers and secondary protective barriers. All walls, doors, floors, and ceiling areas exposed to the useful (primary) beam shall be considered primary protective barriers. All areas exposed to the stray radiation shall be considered secondary protective barriers. Whenever possible, the opening should be located in a secondary barrier where the required shielding thickness is less. The design of the baffles will depend upon a number of factors. These include; energy of radiation, orientation and field size of useful beam, size and location of opening in the pro-

Right:

This overhead view shows how a typical modular barrier with 48" and 36" wide sections can be anchored to the wall.

Below:

This exploded view shows the components required to assemble an 18" wide x 84" high opaque shielding panel and a 48" wide barrier section, both at right angles to a 36" barrier section.

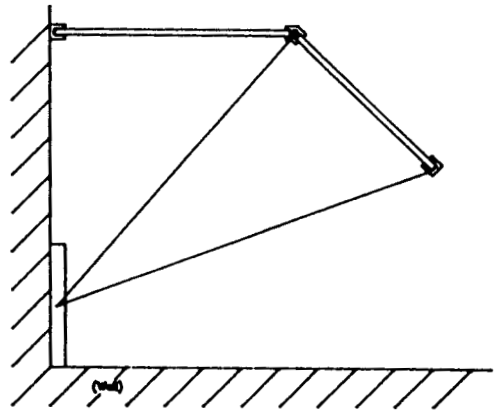

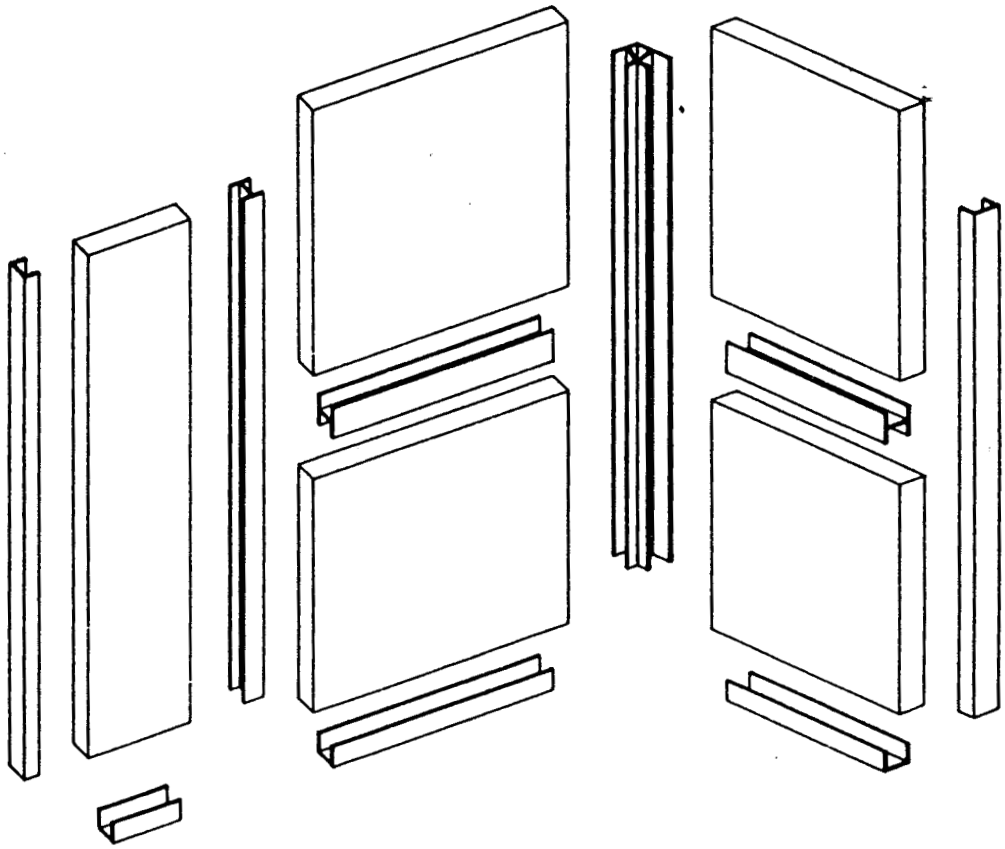

Figure 15. Modular lead-lined control screens.

tective barrier, and geometrical relationship between radiation source and opening. Figure 16 shows typical baffle designs for use in secondary protective barriers. Since the primary protective barrier in a diagnostic and superficial (low voltage) therapy x-ray room need not extend above 7 feet from the finished floor, openings in the wall above this height generally do not require radiation baffles. For orthovoltage (150 to 500 kV) and megavoltage installations, the wall shielding should extend to the ceiling barrier or to the roof, necessitating baffles for ducts, conduits, etc., passing through the walls.

(1) Where ducts terminate at a grille in the wall surface of a primary protective barrier, a lead-lined baffle may be required in front of the grille. The baffle must be at a sufficient distance to permit adequate

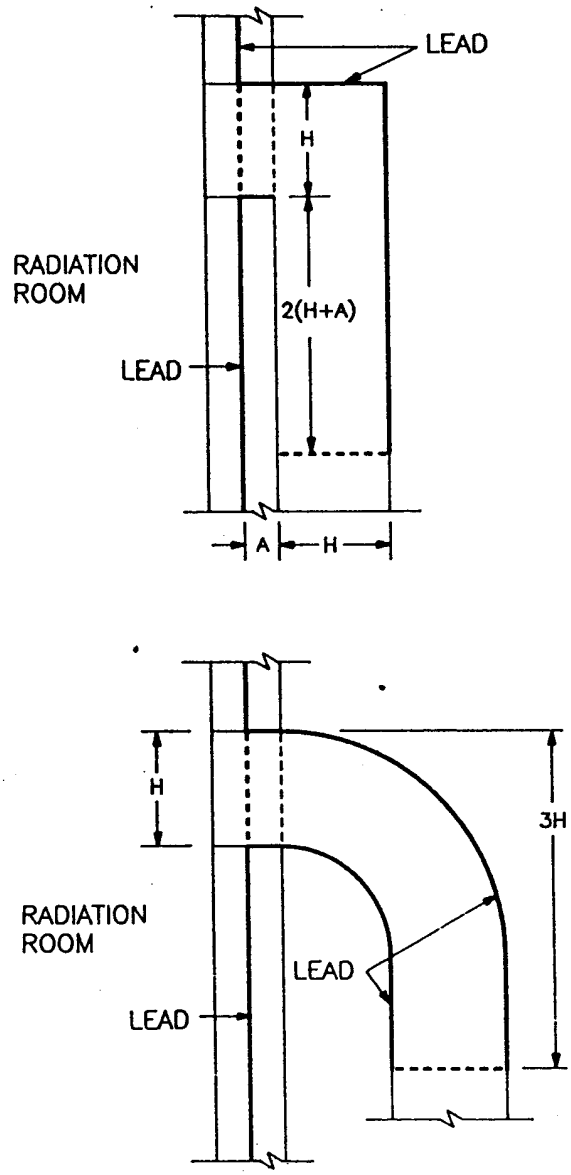

Reprinted from NCRP Report No.49, used with permission.

Figure 16. Typical baffle design for openings in secondary barriers.

airflow and must extend far enough beyond the perimeter of the opening to provide the required degree of protection. See figure 17 for details.

(2) Service boxes, conduits, etc., imbedded in concrete barriers may require lead shielding to compensate for the displaced concrete. Where supplementary lead shielding is required, its thickness should be at least equal to the lead equivalence of the displaced concrete. Conduits of 2 inches outside diameter (O.D.) or less do not usually require additional shielding. The shielding should cover not only the back of the service boxes, but also the sides, or extend sufficiently to offer equivalent protection. Conduits passing through the barrier should have sufficient bends to reduce the radiation to the required level. See figure 18 for details.

10. Inspection.

During construction, a periodic visual inspection of the installation of lead-lined materials is recommended. Specific observable points would be at joints, corners, and the overlapping of the lead. Voids in the shielding barriers must be removed in the early stages of construction while they are still visible.

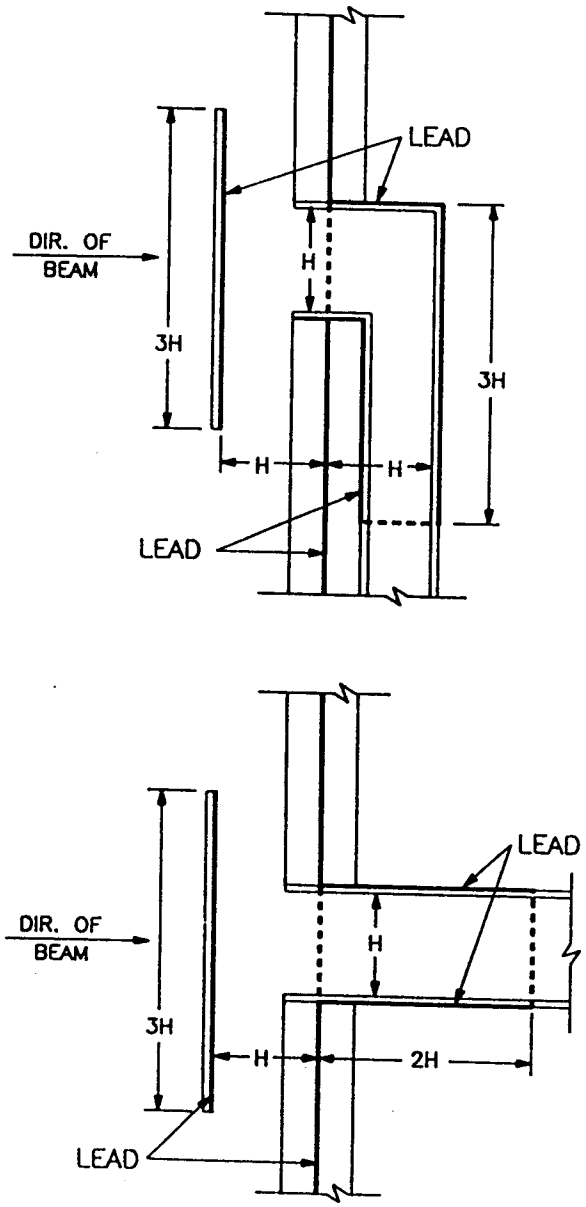

Reprinted from NCRP Report No. 49, used with permission.

Figure 17. Typical baffle design for openings in primary barriers.

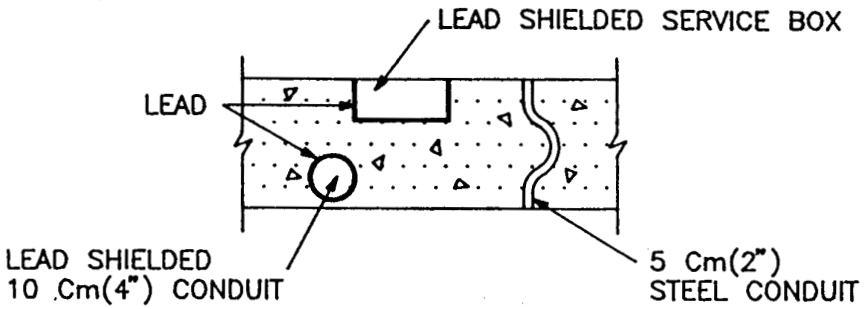

Reprinted from NCRP Report No.49, used with permission.

Figure 18. Lead shielding for service boxes and conduit in concrete barriers.

11. Testing and certification.

After the x-ray and gamma-ray equipment has been installed and placed in operating condition, the installation will be surveyed by a qualified expert in accordance with TB MED 521. NCRP Reports 33 and 49 will be adhered to in surveying medical facilities. NCRP Report 35 will be followed for surveying dental facilities.

GLOSSARY

Controlled area. The defined area in which the exposure of persons to radiation is supervised by a Radiation Protection Officer. Controlled areas require control of access, occupancy, and working conditions.

Half-value layer (HVL). Thickness of a specified substance which, when introduced into the path of a given beam of radiation, reduces the exposure rate by one-half.

Kilovolt (kV). A unit of electrical potential difference equal to 1000 volts.

Kilovolt peak (kVp). The crest value in kilovolts of the potential difference of a pulsating potential generator. When only one-half of the wave is used, the value refers to the useful half of the cycle.

Lead equivalence. The attenuation of a material expressed in an equivalent thickness of lead.

Million electron volts (MeV). Energy equal to that acquired by a particle with one electronic charge being accelerated through a potential difference of 1 million volts (1MV).

Noncontrolled area. Any space not meeting the definition of controlled area.

Occupiable area. Any room or other space, indoors or outdoors, that is likely to be occupied during irradiation by any person, either regularly or periodically during the course of his/her work, habitation, or recreation.

Primary radiation. Radiation arising directly from the target of an x-ray tube or from a radioactive source.

Protective barrier. A barrier of radiation-attenuating material used to give the required protection from radiation exposure.

Qualified expert. With reference to radiation protection, a person having the knowledge and training to advise regarding radiation protection needs, to measure ionizing radiation, and to evaluate safety techniques; a person having relevant certification from the American Board of Radiology or American Board of Health Physics, or equivalent qualifications. With reference to shielding design, a person having particular knowledge and training in the field of medical x-ray and gamma-ray shielding.

Radiation (Ionizing). Any electromagnetic or particulate radiation capable of producing ions, directly or indirectly, by interaction with matter, specifically x-rays and gamma-rays.

Radiation protection survey. An evaluation of the radiation safety in and around an installation.

Radiation protection officer. The person directly responsible for radiation protection.

Scattered radiation. Radiation that has been deviated in direction during passage through matter.

Secondary protective barrier. Barrier sufficient to attenuate stray or secondary radiation to the required degree.

Useful beam. Radiation that passes through the window, aperture, cone, or other collimating device of the source housing. Sometimes called "primary beam."

The proponent agency of this publication is Headquarters, U.S. Army Corps of Engineers. Users are invited to send comments and suggested improvements on DA Form 2028 (Recommended Changes to Publications and Blank Forms) to HQUSACE (CEMP-ES), WASH, DC 20314-1000.

By Order of the Secretary of the Army:

CARL E. VUONO
General, United States Army
Chief of Staff

Official:

WILLIAM J. MEEHAN II
Brigadier General, United States Army
The Adjutant General

Distribution:
Army: To be distributed in accordance with DA Form 12-34B, block 723 requirements for X-Ray Shielding.

☆U.S. GOVERNMENT PRINTING OFFICE: 1996 - 406-421/50219

SECTION 13100

LIGHTNING PROTECTION SYSTEM

PART 1 GENERAL

1.1 REFERENCES

The publications listed below form a part of this specification to the extent referenced. The publications are referred to in the text by basic designation only.

AMERICAN NATIONAL STANDARDS INSTITUTE (ANSI)

ANSI C135.30	(1988) Zinc-Coated Ferrous Ground Rods for Overhead or Underground Line Construction

NATIONAL FIRE PROTECTION ASSOCIATION (NFPA)

NFPA 70	(1999) National Electrical Code
NFPA 780	(1997) Installation of Lightning Protection Systems

UNDERWRITERS LABORATORIES (UL)

UL 96	(1994; Rev thru Dec 1996) Lightning Protection Components
UL 96A	(1994) Installation Requirements for Lightning Protection Systems
UL 467	(1993; Rev thru Aug 1996) Grounding and Bonding Equipment
UL Elec Const Dir	(1997) Electrical Construction Materials Directory

1.2 GENERAL REQUIREMENTS

1.2.1 Verification of Dimensions

The Contractor shall become familiar with all details of the work, verify all dimensions in the field, and shall advise the Contracting Officer of any discrepancy before performing the work. No departures shall be made without the prior approval of the Contracting Officer.

1.2.2 System Requirements

The system furnished under this specification shall consist of the standard products of a manufacturer regularly engaged in the production of lightning protection systems and shall be the manufacturer's latest UL approved design. The lightning protection system shall conform to NFPA 70 and NFPA 780, UL 96 and UL 96A, except where requirements in excess thereof are specified herein.

1.3 SUBMITTALS

Government approval is required for submittals with a "GA" designation; submittals having an "FIO" designation are for information only. The following shall be submitted in accordance with Section 01330 SUBMITTAL PROCEDURES:

SD-04 Drawings

Lightning Protection System; GA.

Detail drawings consisting of a complete list of material, including manufacturer's descriptive and technical literature, catalog cuts, drawings, and installation instructions. Detail drawings shall demonstrate that the system has been coordinated and will function as a unit. Drawings shall show proposed layout and mounting and relationship to other parts of the work.

SD-13 Certificates

Materials and Equipment; GA.

Where material or equipment is specified to comply with requirements of UL, proof of such compliance. The label of or listing in UL Elec Const Dir will be acceptable evidence. In lieu of the label or listing, a written certificate from an approved nationally recognized testing organization equipped to perform such services, stating that the items have been tested and conform to the requirements and testing methods of Underwriters Laboratories may be submitted.

PART 2 PRODUCTS

2.1 MATERIALS

2.1.1 General Requirements

No combination of materials shall be used that form an electrolytic couple of such nature that corrosion is accelerated in the presence of moisture unless moisture is permanently excluded from the junction of such metals. Where unusual conditions exist which would cause corrosion of conductors, conductors with protective coatings or oversize conductors shall be used. Where a mechanical hazard is involved, the conductor size shall be increased to compensate for the hazard or the conductors shall be protected by covering them with molding or tubing made of wood or nonmagnetic material. When metallic conduit or tubing is used, the conductor shall be electrically connected at the upper and lower ends.

2.1.2 Main and Secondary Conductors

Conductors shall be in accordance with NFPA 780 and UL 96 for Class I, Class II, or Class II modified materials as applicable.

2.1.2.1 Copper

Copper conductors used on nonmetallic stacks shall weigh not less than 170 kg per 300 m (375 pounds per thousand feet), and the size of any wire in the cable shall be not less than No. 15 AWG. Counterpoise shall be copper conductors not smaller than No. 1/0 AWG.

2.1.2.2 Aluminum

Aluminum shall not contact the earth nor shall it be used in any other manner that will contribute to rapid deterioration of the metal. Appropriate precautions shall be observed at connections with dissimilar metals. Aluminum conductors for bonding and interconnecting metallic bodies to the main cable shall be at least equivalent to strength and cross-sectional area of a No. 4 AWG aluminum wire. When perforated strips are provided, strips that are much wider than solid strips shall be used. A strip width that is at least twice that of the diameter of the perforations shall be used. Aluminum strip for connecting exposed water pipes shall be not less than No. 12 AWG in thickness and at least 38.1 mm wide.

2.1.3 Air Terminals

Terminals shall be in accordance with UL 96 and NFPA 780. The tip of air terminals on buildings shall be a minimum of 600 mm above the ridge parapet, ventilator or perimeter. On open or hooded vents emitting explosive dusts or vapors under natural or forced draft, air terminals shall be a minimum of 1.5 m above the opening. On open stacks emitting explosive dusts, gases, or vapor under forced draft, air terminals shall extend a minimum of 4.5 m above vent opening. Air terminals more than 600 mm in length shall be supported by a suitable brace, with guides not less than one-half the height of the terminal.

2.1.4 Ground Rods

Rods made of copper-clad steel shall conform to UL 467 and galvanized ferrous rods shall conform to ANSI C135.30. Ground rods shall be not less than 19 mm (3/4 inch) in diameter and 3 m (10 feet) in length. Ground rods of copper-clad steel, stainless steel, galvanized ferrous, and solid copper shall not be mixed on the job.

2.1.5 Connectors

Clamp-type connectors for splicing conductors shall conform to UL 96, class as applicable, and, Class 2, style and size as required for the installation.

2.1.6 Lightning Protection Components

Lightning protection components, such as bonding plates, air terminal supports, chimney bands, clips, and fasteners shall conform to UL 96, classes as applicable.

PART 3 EXECUTION

3.1 INTEGRAL SYSTEM

3.1.1 General Requirements

The lightning protection system shall consist of air terminals, roof conductors, down conductors, ground connections, and grounds, electrically interconnected to form the shortest distance to ground. All conductors on the structures shall be exposed except where conductors are in protective sleeves exposed on the outside walls or down conductors are concealed in walls. Secondary conductors shall interconnect with grounded metallic parts within the building. Interconnections made within side-flash

distances shall be at or above the level of the grounded metallic parts.

3.1.1.1 Air Terminals

Air terminal design and support shall be in accordance with NFPA 780. Terminals shall be rigidly connected to, and made electrically continuous with, roof conductors by means of pressure connectors or crimped joints of T-shaped malleable metal and connected to the air terminal by a dowel or threaded fitting. Air terminals at the ends of the structure shall be set not more than 600 mm (2 feet) from the ends of the ridge or edges and corners of roofs. Spacing of air terminals 600 mm (2 feet) in height on ridges, parapets, and around the perimeter of buildings with flat roofs shall not exceed 7.5 meters. In specific instances where it is necessary to exceed this spacing, the specified height of air terminals shall be increased not less than 50 mm for each 300 mm of increase over 7.5 meters. On large, flat or gently sloping roofs, as defined in NFPA 780, air terminals shall be placed at points of the intersection of imaginary lines dividing the surface into rectangles having sides not exceeding 15 m in length. Air terminals shall be secured against overturning either by attachment to the object to be protected or by means of a substantial tripod or other braces permanently and rigidly attached to the building or structure. Where metal ventilators are installed with air terminals mounted thereon, the air terminal shall not be more than 610 mm away from the farther edge or corner. If the air terminal is farther than this distance, an additional air terminal shall be added in order to meet this requirement. Where metal ventilators are installed with air terminals mounted adjacent, the air terminal shall not be more than 610 mm away from the farther edge or corner. If the air terminal is farther than this distance, an additional air terminal shall be added in order to meet this requirement.

3.1.1.2 Roof Conductors

Roof conductors shall be connected directly to the roof or ridge roll. Sharp bends or turns in conductors shall be avoided. Necessary turns shall have a radius of not less than 200 mm. Conductors shall preserve a downward or horizontal course and shall be rigidly fastened every 900 mm along the roof and down the building to ground. Metal ventilators shall be rigidly connected to the roof conductor at three places. All connections shall be electrically continuous. Roof conductors shall be coursed along the contours of flat roofs, ridges, parapets, and edges; and where necessary, over flat surfaces, in such a way as to join each air terminal to all the rest. Roof conductors surrounding tank tops, decks, flat surfaces, and flat roofs shall be connected to form a closed loop.

3.1.1.3 Down Conductors

Down conductors shall be electrically continuous from air terminals and roof conductors to grounding electrodes. Down conductors shall be coursed over extreme outer portions of the building, such as corners, with consideration given to the location of ground connections and air terminals. Each building or structure shall have not less than two down conductors located as widely separated as practicable, at diagonally opposite corners. On rectangular structures having gable, hip, or gambrel roofs more than 35 m long, there shall be at least one additional down conductor for each additional 15 m of length or fraction thereof. On rectangular structures having French, flat, or sawtooth roofs exceeding 75 m in perimeter, there shall be at least one additional down conductor for each 30 m of perimeter or fraction thereof. On an L- or T-shaped structure,

there shall be at least one additional down conductor; on an H-shaped structure, at least two additional down conductors; and on a wing-built structure, at least one additional down conductor for each wing. On irregularly shaped structures, the total number of down conductors shall be sufficient to make the average distance between them along the perimeter not greater than 30 meters. Additional down conductors shall be installed when necessary to avoid "dead ends" or branch conductors ending at air terminals, except where the air terminal is on a roof below the main protected level and the "dead end" or branch conductor is less than5 m in length and maintains a horizontal or downward coursing. Down conductors shall be equally and symmetrically spaced about the perimeter of the structure. Down conductors shall be concealed in wall adjacent to and bonded to structural columns.

3.1.1.4 Interconnection of Metallic Parts

Metal doors, windows, and gutters shall be connected directly to the grounds or down conductors using not smaller than No. 6 copper conductor, or equivalent. Conductors placed where there is probability of unusual wear, mechanical injury, or corrosion shall be of greater electrical capacity than would normally be used, or shall be protected. The ground connection to metal doors and windows shall be by means of mechanical ties under pressure, or equivalent.

3.1.1.5 Ground Connections

Ground connections comprising continuations of down conductors from the structure to the grounding electrode shall securely connect the down conductor and ground in a manner to ensure electrical continuity between the two. All connections shall be of the clamp type. There shall be a ground connection for each down conductor. Metal water pipes and other large underground metallic objects shall be bonded together with all grounding mediums. Ground connections shall be protected from mechanical injury. In making ground connections, advantage shall be taken of all permanently moist places where practicable, although such places shall be avoided if the area is wet with waste water that contains chemical substances, especially those corrosive to metal.

3.1.1.6 Grounding Electrodes

A grounding electrode shall be provided for each down conductor located as shown. A driven ground shall extend into the earth for a distance of not less than 3.0 meters. Ground rods shall be set not less than 900 mm, nor more than 2.5 m, from the structures foundation. The complete installation shall have a total resistance to ground of not more than 10 ohms. Ground rods shall be tested individually prior to connection to the system and the system as a whole shall be tested not less than 48 hours after rainfall. When the resistance of the complete installation exceeds the specified value or two ground rods individually exceed 25 ohms, the Contracting Officer shall be notified immediately. A counterpoise shall be of No. 1/0 copper cable or equivalent material having suitable resistance to corrosion and shall be laid around the perimeter of the structure in a trench not less than 600 mm deep at a distance not less than 900 mm nor more than 2.5 m from the nearest point of the structure. All connections between ground connectors and grounds or counterpoise, and between counterpoise and grounds shall be electrically continuous.

3.2 NOT USED

3.3 NOT USED

3.4 INTERCONNECTION OF METAL BODIES

Metal bodies of conductance shall be protected if not within the zone of protection of an air terminal. Metal bodies of conductance having an area of 0.258 square meters (400 square inches) or greater or a volume of 0.0164 cubic meters (1000 cubic inches) or greater shall be bonded to the lightning protection system using main size conductors and a bonding plate having a surface contact area of not less than 1935.5 square millimeters (3 square inches).Provisions shall be made to guard against the corrosive effect of bonding dissimilar metals. Metal bodies of inductance shall be bonded at their closest point to the lightning protection system using secondary bonding conductors and fittings. A metal body that exceeds 1.5 m in any dimension, that is situated wholly within a building, and that does not at any point come within 1.8 m of a lightning conductor or metal connected thereto shall be independently grounded.

3.5 NOT USED

3.6 NOT USED

3.7 NOT USED

3.8 NOT USED

3.9 INSPECTION

The lightning protection system will be inspected by the Contracting Officer to determine conformance with the requirements of this specification. No part of the system shall be concealed until so authorized by the Contracting Officer.

-- End of Section --

SECTION 13120

STANDARD METAL BUILDING SYSTEMS

PART 1 GENERAL

1.1 REFERENCES

The publications listed below form a part of this specification to the extent referenced. The publications are referred to in the text by basic designation only.

ALUMINUM ASSOCIATION (AA)

AA-01	(1997) Aluminum Standards and Data
AA-02	(1994) Aluminum Design Manual: Specification & Guidelines for Aluminum Structures

AMERICAN INSTITUTE OF STEEL CONSTRUCTION (AISC)

AISC FCD	(1995a) Quality Certification Program Description
AISC Pub No. S303	(1992) Code of Standard Practice for Steel Buildings and Bridges
AISC Pub No. S329	(1985; Appx A June 1994) Allowable Stress Design Specification for Structural Joints Using ASTM A 325 or A 490 Bolts
AISC-04	(1989) Specification for Structural Steel Buildings - Allowable Stress Design, Plastic Design
AISC Pub No. S342 L	(1993) Load and Resistance Factor Design Specification for Structural Steel Buildings

AMERICAN IRON AND STEEL INSTITUTE (AISI)

AISI-01	(1996) Cold-Formed Steel Design Manual

AMERICAN SOCIETY FOR TESTING AND MATERIALS (ASTM)

ASTM A 36/A 36M	(1997a) Carbon Structural Steel
ASTM A 53	(1997) Pipe, Steel, Black and Hot-Dipped, Zinc-Coated, Welded and Seamless
ASTM A 252	(1996) Welded and Seamless Steel Pipe Piles
ASTM A 325M	(1993) High-Strength Bolts for Structural Steel Joints (Metric)
ASTM A 490	(1997) Heat-Treated Steel Structural Bolts, 150 ksi Minimum Tensile Strength

ASTM A 490M	(1993) High-Strength Steel Bolts, Classes 10.9 and 10.9.3, for Structural Steel Joints (Metric)
ASTM A 500	(1996) Cold-Formed Welded and Seamless Carbon Steel Structural Tubing in Rounds and Shapes
ASTM A 501	(1996) Hot-Formed Welded and Seamless Carbon Steel Structural Tubing
ASTM A 529/A 529M	(1996) High-Strength Carbon-Manganese Steel of Structural Quality
ASTM A 570/A 570M	(1996) Steel, Sheet and Strip, Carbon, Hot-Rolled, Structural Quality
ASTM A 572/A 572M	(1997a) High-Strength Low-Alloy Columbium-Vanadium Structural Steel
ASTM A 588/A 588M	(1997) High-Strength Low-Alloy Structural Steel with 50 ksi (345 MPa) Minimum Yield Point to 4 in. (100 mm) Thick
ASTM A 606	(1997) Steel, Sheet and Strip, High-Strength, Low-Alloy, Hot-Rolled and Cold-Rolled, with Improved Atmospheric Corrosion Resistance
ASTM A 607	(1996) Steel, Sheet and Strip, High-Strength, Low-Alloy, Columbium or Vanadium, or Both, Hot-Rolled and Cold-Rolled
ASTM A 618	(1996) Hot-Formed Welded and Seamless High-Strength Low-Alloy Structural Tubing
ASTM A 653/A 653M	(1997) Steel Sheet, Zinc-Coated (Galvanized) or Zinc-Iron Alloy-Coated (Galvannealed) by the Hot-Dip Process
ASTM A 792/A 792M	(1997) Steel Sheet, 55% Aluminum-Zinc Alloy-Coated by the Hot-Dip Process
ASTM B 209M	(1995) Aluminum and Aluminum-Alloy Sheet and Plate (Metric)
ASTM B 221M	(1996) Aluminum and Aluminum-Alloy Extruded Bars, rods, Wire, Profiles, and Tubes (Metric)
ASTM B 241/B 241M	(1996) Aluminum and Aluminum-Alloy Seamless Pipe and Seamless Extruded Tube
ASTM B 308/B 308M	(1996) Aluminum-Alloy 6061-T6 Standard Structural Profiles
ASTM B 429	(1995) Aluminum-Alloy Extruded Structural

	Pipe and Tube
ASTM D 1308	(1987; R 1993) Effect of Household Chemicals on Clear and Pigmented Organic Finishes
ASTM D 2244	(1993) Calculation of Color Differences from Instrumentally Measured Color Coordinates
ASTM D 4214	(1997) Evaluating the Degree of Chalking of Exterior Paint Films
ASTM D 4397	(1996) Polyethylene Sheeting for Construction, Industrial, and Agricultural Applications

AMERICAN SOCIETY OF CIVIL ENGINEERS (ASCE)

ASCE 7	(1995) Minimum Design Loads for Buildings and Other Structures

AMERICAN WELDING SOCIETY (AWS)

AWS D1.1	(1996) Structural Welding Code - Steel

MATERIAL HANDLING INDUSTRY (MHI)

MHI CMAA 70	(1994) Electric Overhead Traveling Cranes

METAL BUILDING MANUFACTURERS ASSOCIATION (MBMA)

MBMA-01	(1996) Low Rise Building Systems Manual

SHEET METAL & AIR CONDITIONING CONTRACTORS' NATIONAL ASSOCIATION (SMACNA)

SMACNA-02	(1993; Errata) Architectural Sheet Metal Manual

UNDERWRITERS LABORATORIES (UL)

UL 580	(1994; Rev thru Sep 1997) Tests for Uplift Resistance of Roof Assemblies

1.2 GENERAL REQUIREMENTS

The metal building system covered under this specification shall be provided by a single manufacturer and shall include all components and assemblies that form a building. Structural Standing Seam Metal Roofing System, when specified, shall be furnished as part of a single manufacturer's system.

1.2.1 Building Configuration

Buildings shall have structural steel main building frames, and secondary framing including purlins and girts, engineered and fabricated by the building systems supplier. Buildings shall have vertical steel walls and gable roof system including soffits gutters and downspouts. Roof slope

shall be as shown on the drawings. Buildings shall be single-span structures with one of the following framing systems: Rigid frame. Exterior doors, windows, overhead doors and louvers shall be included in the metal building system. Building dimensions shall be not less than those indicated. The minimum inside clear dimensions shall be as shown on the drawings.

1.2.2 Qualifications

1.2.2.1 Manufacturer

Metal building shall be the product of a recognized steel building systems manufacturer who has been in the practice of manufacturing steel building systems for a period of not less than 5 years. The manufacturer shall be chiefly engaged in the practice of designing and fabricating steel building systems. The manufacturer shall be certified under the Metal Building Systems (MB) Certification Program, AISC FCD. Structural framing and covering shall be designed by a licensed Professional Engineer experienced in design of this work.

1.2.2.2 Installer

Erector shall have specialized experience in the erection of steel building systems for a period of at least 3 years. Framing shall be erected in accordance with MBMA-01, common industry practices and erection instructions describing the basic sequence of assembly, temporary bracing, shoring, and related information necessary for erection of the metal building including its structural framework and components. The erector shall furnish temporary guys and bracing where needed for squaring, plumbing, and securing the structural framing against loads acting on the exposed framing, such as wind loads and seismic forces, as well as loads due to erection equipment and erection operation. Bracing furnished by the manufacturer for the metal building system shall not be assumed to be adequate during erection. Structural members shall not be field cut or altered without approval of the metal building manufacturer. Welds, abrasions, and surfaces not shop primed shall be primed after erection.

1.2.2.3 Manufacturer's Representative

A representative designated by the building manufacturer, who is familiar with the design of the building supplied and experienced in the erection of metal buildings similar in size to the one required under this contract, shall be present at the job site during construction, from the start of the structural framing erection until completion of the installation of the exterior covering, to assure that the building is erected properly.

1.3 DESIGN REQUIREMENTS

Criteria, loading combinations, and definitions shall be in accordance with ASCE 7.

1.3.1 Dead Loads

The dead load shall consist of the weight of all permanent construction such as roof, framing, covering members and all other materials of the building system.

1.3.2 Collateral Loads

Collateral load of 400 Pa shall be applied to the entire structure to account for the weight of additional permanent materials other than the building system, such as sprinklers, mechanical systems, electrical systems, hung partitions, and ceilings. This allowance does not include the weight of hung equipment weighing 25 kg or more. Equipment loads of 25 kg or more shall be shown on the shop (detail) drawings and the structure (frame, purlins, girts) shall be strengthened as required. The Contractor is responsible for providing the building manufacturer the magnitude and approximate location of all concentrated loads greater than 25 kgs before design of the building commences.

1.3.3 Roof Live Loads

1.3.3.1 Uniform Loads

Uniform roof live loads, including maintenance traffic and construction loads, shall be determined and applied in accordance with ASCE 7.

1.3.3.2 Concentrated Loads

In addition to ASCE 7 roof live loads, a minimum design concentrated load of 1335 N shall be used to simulate a construction load on roof panels. The concentrated load shall be applied at the panel midspan and shall be resisted by a single standing seam metal roof panel, or a 610 mm wide corrugated metal panel, assumed to be acting as a beam. The undeformed shape of the panel shall be used to determine the section properties.

1.3.4 Roof Snow Loads

The design roof snow loads, including effects of drifting, shall be determined and applied in accordance with ASCE 7 unless otherwise shown on the contract drawings.

1.3.5 Wind Loads

Wind pressures shall be computed and applied in accordance with ASCE 7 unless otherwise shown on the contract drawings.

1.3.6 Seismic Loads

Seismic loads shall be computed for the effective peak acceleration (Aa) seismic zone 1 in accordance with ASCE 7 using an importance factor of 1.0.

1.3.7 NOT USED

1.3.8 Foundations

Foundations shall be designed for an allowable soil bearing pressure of 96 Pa, a minimum bottom of footing depth of 1200 mm below finish floor elevation, a factor of safety of 1.5 for overturning, sliding and uplift, and a concrete compressive strength as specified in Section 03300 CAST-IN-PLACE STRUCTURAL CONCRETE.

1.3.9 Framing and Structural Members

Structural steel members and their connections shall be designed in accordance with AISC-04 or AISC Pub No. S342 L. Structural cold-formed steel framing members and their connections shall be designed in accordance with AISI-01. Aluminum structural members and their connections shall be

designed in accordance with AA-02. Maximum deflection under applied live load, snow, or wind load shall not exceed 1/180th of the span length. Members with openings in their webs shall be designed with consideration of the additional stresses which will result due to the openings. Deflections of the steel framing above and along the side of commercially framed door openings shall be limited to a maximum allowable deflection of 1/360 of the opening width to ensure proper operation of the doors. The contractor shall include the loads that the door transfers to the building frame in the design. Framed openings shall be designed to structurally replace the covering and framing displaced. The subpurlin and/or purlin spacing shall not exceed 750 mm on centers at the corner, edge and ridge zones, and 1500 mm maximum on centers for the remainder of the roof.

1.3.10 Roofing and Siding

Except as otherwise specified, steel roofing and siding shall be designed in accordance with AISI-01. Aluminum roofing and siding shall be designed in accordance with AA-01. Section modulus and moment of inertia of aluminum sheet shall be determined for actual cross section dimensions by the conventional methods for actual design stresses and by effective width concept for deflection in accordance with AA-02. Maximum deflection for wall and roof panels under applied live load, snow or wind loads shall not exceed 1/180th of the span length. The design analysis shall establish that the roof, when deflected under loading combinations, shall not result in ponding. Maximum deflections shall be based on sheets continuous across two or more supports with sheets unfastened and fully free to deflect. The calculated deflection from the concentrated load shall not exceed 1/180 of the span length. The methods for resisting lateral loads shall be cross-bracing, rigid frames, or wind columns.

1.3.11 Provisions for Gutters And Downspouts

Gutters and downspouts shall be designed according to the requirements of SMACNA-02 for storms which should be exceeded only once in 5 years and with adequate provisions for thermal expansion and contraction. Supports for gutters and downspouts shall be designed for the anticipated loads. Roof drainage system to withstand rainfall intensity of 120 mm/hour , with 5 minute duration.

1.3.12 Provisions for Louvers

Louvers shall be fixed-blade type designed for a minimum net open area of 1.0 square meters at each end, to be rainproof, and to resist vibration when air is passed through.

1.3.13 Ventilators

1.3.13.1 NOT USED

1.3.13.2 Continuous Ventilators

Continuous roof ventilators shall be ridge mounted gravity type, without dampers, designed for equivalent free area of wall louvers.

1.3.14 Drift Provisions

Lateral deflections, or drift, at the roof level of a structure in relation to the floor or slab on grade, caused by deflection of horizontal force resisting elements, shall be less than 20 mm.

1.3.15 NOT USED

1.3.16 Grounding and Lightning Protection

Grounding and lightning protection shall be provided as specified in Section 16670 LIGHTNING PROTECTION SYSTEM.

1.4 DESIGN ANALYSIS

The design analysis shall be the design of a licensed Professional Engineer experienced in design of this work and shall include complete calculations for the building, its components, and the foundations. Foundations shown on the drawings are based on loads derived from a representative set of similar building types. The Contractor shall obtain the services of a licensed Professional Engineer to verify that the foundations shown are adequate for the building supplied using the criteria in paragraph Foundations. Formulas and references shall be identified. Assumptions and conclusions shall be explained, and cross-referencing shall be clear. Wind forces on various parts of the structure, both positive and negative pressure, shall be calculated with the controlling pressure summarized. Lateral forces due to seismic loading shall be calculated and tabulated for the various parts and portions of the building. Computer programmed designs shall be accompanied by stress values and a letter of certification, signed by a licensed Professional Engineer, stating the design criteria and procedures used and attesting to the adequacy and accuracy of the design. A narrative of the computer program delineating the basic methodology shall be included. Computer program output shall be annotated and supplemented with sketches to verify the input and output. Critical load conditions used in the final sizing of the members shall be emphasized. The design analysis shall include the name and office phone number of the designer, who shall function as a point of contact to answer questions during the detail drawing review.

1.5 SUBMITTALS

Government approval is required for submittals with a "GA" designation; submittals having an "FIO" designation are for information only. The following shall be submitted in accordance with Section 01330 SUBMITTAL PROCEDURES:

SD-01 Data

Design Analysis; GA.

Design analysis (building and foundations including anchor bolt plans) as one package with the drawings.

Instruction Manuals; GA.

Manufacturer's literature for individual building component systems.

Erection Procedures; GA.

Manufacturer's erection instruction and erection drawings describing the preparation requirements, assembly sequence, temporary bracing, shoring, and related information necessary for erection of the metal building including its structural framework and components.

SD-04 Drawings

Metal Building Systems; GA.

Detail drawings consisting of catalog cuts, design and erection drawings, and an isometric view of the roof showing the design wind uplift pressure and dimensions of edge and corner zones. Shop painting and finishing specifications. Anchor bolt placement plan and column reactions.

SD-08 Statements

Qualifications; GA.

Qualifications of the manufacturer, the manufacturer's Representative when one is used, and qualifications and experience of the building erector. A brief list of locations where buildings of similar design have been used shall be included with the detail drawings and shall also include information regarding date of completion, name and address of owner, and how the structure is used.

SD-13 Certificates

Metal Building Systems; FIO.

a. A Certificate from the metal building manufacturer stating that the metal building was designed from a complete set of the contract drawings and specifications and that the building furnished complies with the specified requirements.

b. Mill certification for structural bolts, framing steel, roofing and siding, and steel wall liner panels.

c. Warranty certificate. At the completion of the project the Contractor shall furnish signed copies of the 5-year Warranty for Metal Building System, a sample copy of which is attached to this section, the 20-year Manufacturer's Material Warranties, and the Manufacturer's 20-year System Weathertightness Warranty when one is required.

Insulation; GA.

Certificate attesting that the polyisocyanurate insulation furnished for the project contains recovered material, and showing an estimated percent of such recovered material.

SD-14 Samples

Accessories; GA.

One sample of each type of flashing, trim, closure, cap and similar items. Size shall be sufficient to show construction and configuration.

Roofing and Siding; GA.

One piece of each type and finish (exterior and interior) to be used, 225 mm long, full width. The sample for factory color finished covering shall be accompanied by certified laboratory test reports showing that the sheets to be furnished are produced under a continuing quality control program and that a representative sample consisting of not less than 5 pieces has been tested and has met the quality standards specified for factory color finish.

Fasteners; GA.

Two samples of each type to be used, with statement regarding intended use. If so requested, random samples of bolts, nuts, and washers as delivered to the job site shall be taken in the presence of the Contracting Officer and provided to the Contracting Officer for testing to establish compliance with specified requirements.

Insulation; FIO.

One piece of each type to be used, and descriptive data covering installation.

Gaskets and Insulating Compounds; GA.

Two samples of each type to be used and descriptive data.

Sealant; GA.

One sample, approximately 0.5 kg, and descriptive data.

Wall Liners; GA.

One piece, 225 mm long, full width.

1.6 DELIVERY AND STORAGE

Materials shall be delivered to the site in a dry and undamaged condition and stored out of contact with the ground. Materials other than framing and structural members shall be covered with weathertight coverings and kept dry. Storage accommodations for roofing and siding shall provide good air circulation and protection from surface staining.

1.7 WARRANTIES

The Metal Building System, composed of framing and structural members, roofing and siding, gutters and downspouts, accessories, fasteners, trim, and miscellaneous building closure items such as doors and windows (when furnished by the manufacturer) shall be warranted as described below against material and workmanship deficiencies, system deterioration caused by exposure to the elements and service design loads, leaks and wind uplift damage. Any emergency temporary repairs conducted by the owner shall not negate the warranties.

1.7.1 Prime Contractor's Weathertightness Warranty

The Metal Building System shall be warranted by the Contractor on a no penal sum basis for a period of five years against materials and workmanship deficiencies; system deterioration caused by exposure to the elements and/or inadequate resistance to specified service design loads, water leaks, and wind uplift damage. The Metal Building System covered under this warranty shall include but is not limited to the following: framing and structural members, roofing and siding panels and seams, interior or exterior gutters and downspouts, accessories, fasteners, trim, flashings and miscellaneous building closure items such as doors and windows (when furnished by the manufacturer), connectors, components, and fasteners, and other system components and assemblies installed to provide a weathertight system; and items specified in other sections of these

specifications that become part of the metal building system. All material and workmanship deficiencies, system deterioration caused by exposure to the elements and/or inadequate resistance to specified service design loads, water leaks and wind uplift damage shall be repaired as approved by the Contracting Officer. See the attached Contractor's written warranty for issue resolution of warrantable defects. This warranty shall warrant and cover the entire cost of repair or replacement, including all material, labor, and related markups. The Contractor shall supplement this warranty with written warranties from the installer and/or system manufacturer, which shall be submitted along with Contractor's warranty. However, the Contractor is ultimately responsible for this warranty. The Contractor's written warranty shall be as outlined in attached **WARRANTY FOR METAL BUILDING SYSTEMS,** and start upon final acceptance of the facility. The Contractor shall provide a separate bond in an amount equal to the installed total metal building system cost in favor of the owner (Government) covering the Contractor's warranty responsibilities effective throughout the five year Contractor's warranty period for the entire metal building system as outlined above.

1.7.2 Manufacturer's Material and/or System Weathertightness Warranties

The Contractor shall furnish, in writing, the following manufacturer's material warranties to the Contracting Officer which cover all Metal Building System components:

a. A manufacturer's 20 year material warranty warranting that the specified aluminum, zinc-coated steel, aluminum-zinc alloy coated steel or aluminum-coated steel will not rupture, structurally fail, fracture, deteriorate, or become perforated under normal design atmospheric conditions and service design loads. Liability under this warranty shall be limited exclusively to the cost of either repairing or replacing nonconforming, ruptured, perforated, or structurally failed securement system including fasteners and coil material.

b. A manufacturer's 20 year exterior material finish warranty on the factory colored finish warranting that the finish, under normal atmospheric conditions at the site, will not crack, peel, or delaminate; chalk in excess of a numerical rating of eight, as determined by ASTM D 4214test procedures; or change colors in excess of five CIE or Hunter Lab color difference (delta E) units in accordance with ASTM D 2244. Liability under this warranty is exclusively limited to replacing the defective coated material.

1.8 COORDINATION MEETING

A coordination meeting shall be held within 45 days after contract award for mutual understanding of the metal building system contract requirements. This meeting shall take place at the building site and shall include representatives from the Contractor, the roofing/metal building system manufacturer, the roofing/metal building supplier, the erector, the designer, and the Contracting Officer. All items required by paragraph SUBMITTALS shall be discussed, including applicable standard manufacturer shop drawings, and the approval process. The Contractor shall coordinate time and arrangements for the meeting

PART 2 PRODUCTS

2.1 BUILDING COMPONENTS

Each piece or part of the assembly shall be clearly and legibly marked to correspond with the drawings.

2.2 FRAMING AND STRUCTURAL MEMBERS

Steel 3 mm or more in thickness shall conform to ASTM A 36/A 36M, ASTM A 529/A 529M, ASTM A 572/A 572M, or ASTM A 588/A 588M. Uncoated steel less than 3 mm in thickness shall conform to ASTM A 570/A 570M, ASTM A 606, or ASTM A 607. Galvanized steel shall conform to ASTM A 653/A 653M, G 90 coating designation, 1.143 mm minimum thickness. Aluminum-zinc coated steel shall conform to ASTM A 792/A 792M, AZ 55 coating designation, 1.143 mm minimum thickness. Aluminum sheet shall conform to ASTM B 209M , 0.813 mm minimum thickness. Aluminum structural shapes and tubes shall conform to ASTM B 221M , or ASTM B 308/B 308M. Structural pipe shall conform to ASTM A 53, ASTM A 252, ASTM A 500, ASTM A 501, ASTM A 618, ASTM B 221M , ASTM B 241/B 241M or ASTM B 429. Holes for structural connections shall be made in the shop.

2.3 ROOFING AND SIDING

Roofing and siding shall be steel and shall have a factory color finish.

2.3.1 Roofing

Length of sheets shall be sufficient to cover the entire length of any unbroken roof slope unless otherwise approved. Width of sheets with overlapping configurations shall provide not less than 610 mm of coverage in place interlocking ribs shall provide not less than 305 mm of coverage in place. Provisions shall be made for thermal expansion and contraction consistent with the type of system to be used. Panel shall have configurations for overlapping sheets. Roof deck assemblies shall be Class 90 as defined in UL 580. Exposed, penetrating fastener may be used. Height of corrugation at overlap of adjacent roof sheets shall be the building manufacturer's standard for the indicated roof slope. Color and finish shall match roofing of Maintenance Facility.

2.3.2 Siding

Refer to Specification Section 07413 METAL SIDING.

2.3.3 Steel Panels

Refer to Specification Section 07413 METAL SIDING.

2.3.4 NOT USED

2.3.5 NOT USED

2.3.6 Factory Color Finish

Refer to Specification Section 07413 METAL SIDING.

2.3.6.1 Salt Spray Test

Refer to Specification Section 07413 METAL SIDING.

2.3.6.2 Formability Test

Refer to Specification Section 07413 METAL SIDING.

2.3.6.3 Accelerated Weathering, Chalking Resistance and Color Change

Refer to Specification Section 07413 METAL SIDING.

2.3.6.4 Humidity Test

Refer to Specification Section 07413 METAL SIDING.

2.3.6.5 Impact Resistance

Refer to Specification Section 07413 METAL SIDING.

2.3.6.6 Abrasion Resistance Test

Refer to Specification Section 07413 METAL SIDING.

2.3.6.7 Specular Gloss

Refer to Specification Section 07413 METAL SIDING.

2.3.6.8 Pollution Resistance

Coating shall show no visual effects when covered spot tested in a 10 percent hydrochloric acid solution for 24 hours in accordance with ASTM D 1308.

2.3.7 Accessories

Flashing, trim, metal closure strips and curbs, fascia, caps, diverters, and similar metal accessories shall be the manufacturer's standard products. Exposed metal accessories shall be finished to match the building finish. Molded closure strips shall be bituminous-saturated fiber, closed-cell or solid-cell synthetic rubber or neoprene, or polyvinyl chloride premolded to match configuration of the roofing or siding and shall not absorb or retain water.

2.4 WALL LINERS

Refer to Specification Section 07413 METAL SIDING.

2.5 FASTENERS

Fasteners for steel wall and roof panels shall be zinc-coated steel, aluminum, corrosion resisting steel, or nylon capped steel, type and size specified below or as otherwise approved for the applicable requirements. Fasteners for aluminum wall panels shall be aluminum or corrosion resisting steel. Fasteners for attaching wall panels to supports shall provide both tensile and shear strength of not less than 3.34 kN (750 lbs) per fastener. Fasteners for accessories shall be the manufacturer's standard. Exposed wall fasteners shall be color finished or provided with plastic color caps to match the covering. Nonpenetrating fastener system for wall panels using concealed clips shall be manufacturer's standard for the system provided.

2.5.1 Screws

Screws shall be as recommended by the manufacturer to meet the design strength requirements.

2.5.2 End-Welded Studs

Automatic end-welded studs shall be shouldered type with a shank diameter of not less than 5 mm and cap or nut for holding covering against the shoulder.

2.5.3 Explosive Actuated Fasteners

Fasteners for use with explosive actuated tools shall have a shank of not less than 3.68 mm with a shank length of not less than 13 mm for fastening panels to steel and not less than 25 mm for fastening panels to concrete.

2.5.4 Blind Rivets

Blind rivets shall be aluminum with 5 mm nominal diameter shank or stainless steel with 3 mm nominal diameter shank. Rivets shall be threaded stem type if used for other than the fastening of trim. Rivets with hollow stems shall have closed ends.

2.5.5 Bolts

Bolts shall be not less than 6 mm diameter, shouldered or plain shank as required, with proper nuts.

2.6 GUTTERS AND DOWNSPOUTS

Gutters and downspouts shall be fabricated of aluminum, zinc-coated steel or aluminum-zinc alloy coated steel and shall have manufacturer's factory color finish. Minimum uncoated thickness of materials shall be 0.455 mm for steel and 0.8128 mm for aluminum. All accessories necessary for the complete installation of the gutters and downspouts shall be furnished. Accessories shall include gutter straps, downspout elbows, downspout straps and fasteners fabricated from metal compatible with the gutters and downspouts.

2.7 LOUVERS

Louvers shall be fabricated of aluminum, zinc-coated steel, or aluminum-zinc alloy coated steel; shall have manufacturer's factory color finish; and shall be furnished with insect screens. Minimum uncoated thickness of materials shall be 1.214 mm for steel and 1.600 mm for aluminum. Manually operated louvers shall be designed to be opened and closed from the operating floor.

2.8 NOT USED

2.9 CONTINUOUS ROOF VENTILATORS

Continuous roof ventilators shall be fabricated of aluminum, zinc-coated steel, or aluminum-zinc alloy coated steel, shall have manufacturer's factory color finish, and shall be furnished with insect screens and chain or cable operated dampers. Minimum uncoated thickness of materials shall be 0.455 mm for steel and 0.813 mm for aluminum. Ventilators shall be furnished in 2.44 to 3.05 m long sections braced at midlength.

2.10 NOT USED

2.11 NOT USED

2.12 DOORS

2.12.1 Hinged Doors

Hinged doors and frames shall receive a galvanic coating and factory primer and shall conform to the requirements of Section 08110 STEEL DOORS AND FRAMES. Exterior doors shall have top edges closed flush and sealed against water penetration. Hardware shall be as specified in Section 08700 BUILDERS' HARDWARE.

2.12.2 NOT USED

2.12.3 Overhead Doors Rolling Doors

Overhead rolling doors shall conform to the requirements of Section 08330 OVERHEAD ROLLING DOORS. Hardware shall be as specified in Section 08700 BUILDERS' HARDWARE.

2.13 NOT USED

2.14 NOT USED

2.15 SEALANT

Sealant shall be an elastomeric type containing no oil or asphalt. Exposed sealant shall be clear and shall cure to a rubber like consistency.

2.16 GASKETS AND INSULATING COMPOUNDS

Gaskets and insulating compounds shall be nonabsorptive and suitable for insulating contact points of incompatible materials. Insulating compounds shall be nonrunning after drying.

2.17 VAPOR RETARDER

2.17.1 NOT USED

2.17.2 Vapor Retarders Separate from Insulation

Vapor retarder material shall be polyethylene sheeting conforming to the requirements of ASTM D 4397. A single ply of 0.25 mm polyethylene sheet; or, at the option of the Contractor, a double ply of 0.15 mm polyethylene sheet shall be used. A fully compatible polyethylene tape shall be provided which has equal or better water vapor control characteristics than the vapor retarder material. A cloth industrial duct tape in a utility grade shall also be provided to use as needed to protect the vapor retarder from puncturing.

2.18 SHOP PRIMING

Ferrous surfaces shall be cleaned of oil, grease, loose rust, loose mill scale, and other foreign substances and shop primed. Primer coating shall be in accordance with the manufacturer's standard system.

PART 3 EXECUTION

3.1 ERECTION

Dissimilar materials which are not compatible when contacting each other shall be insulated from each other by means of gaskets or insulating compounds. Improper or mislocated drill holes in panels shall be plugged with an oversize screw fastener and gasketed washer; however, panels with an excess of such holes or with such holes in critical locations shall not be used. Exposed surfaces shall be kept clean and free from sealant, metal cuttings, excess material from thermal cutting, and other foreign materials. Exposed surfaces which have been thermally cut shall be finished smooth within a tolerance of 3 mm. Stained, discolored or damaged sheets shall be removed from the site. Welding of steel shall conform to AWS D1.1; welding of aluminum shall conform to AA-02.

3.1.1 Framing Members and Anchor Bolts

Erection shall be in accordance with the approved erection instructions and drawings and with applicable provision of AISC-04. Framing members fabricated or modified on site shall be saw or abrasive cut; bolt holes shall be drilled. Onsite flame cutting of framing members, with the exception of small access holes in structural beam or column webs, will not be permitted. High-strength bolting shall conform to AISC Pub No. S329 using ASTM A 325M or ASTM A 490, ASTM A 490M bolts. Improper or mislocated bolt holes in structural members or other misfits caused by improper fabrication or erection, shall be repaired in accordance with AISC Pub No. S303. Concrete work is specified in Section 03300 CAST-IN-PLACE STRUCTURAL CONCRETE. Anchor bolts shall be accurately set by template while the concrete is in a plastic state. Uniform bearing under base plates and sill members shall be provided using a nonshrinking grout. Separate leveling plates under column base plates shall not be used. Members shall be accurately spaced to assure proper fitting of panels. As erection progresses, the work shall be securely fastened to resist the dead load and wind and erection stresses. Supports for electric overhead traveling cranes shall be positioned and aligned in accordance with MHI CMAA 70.

3.1.2 Roofing and Siding Installation

Siding shall be applied with the longitudinal configurations in the vertical position. Roofing shall be applied with the longitudinal configurations in the direction of the roof slope. Accessories shall be fastened into framing members, except as otherwise approved. Closure strips shall be provided as indicated and where necessary to provide weathertight construction. Fastener and fastener spacing shall be in accordance with manufacture design.

3.1.3 Installation of Gutters and Downspouts

Gutters and downspouts shall be rigidly attached to the building. Spacing of cleats for gutters shall be 400 mm maximum. Spacing of brackets and spacers for gutters shall be 1 m maximum. Supports for downspouts shall be spaced according to manufacturer's recommendations.

3.1.4 Louvers and Ventilators

Louvers and ventilators shall be rigidly attached to the supporting construction to assure a weather tight installation.

3.1.5 Doors and Windows

Doors and windows, including frames and hardware, shall be securely anchored to the supporting construction, shall be installed plumb and true,

and shall be adjusted as necessary to provide proper operation. Joints at doors and windows shall be sealed according to manufacturer's recommendations to provide weathertight construction.

3.1.6 NOT USED

3.1.7 Vapor Retarder Installation

3.1.7.1 NOT USED

3.1.7.2 Polyethylene Vapor Retarder

The polyethylene vapor retarder membrane shall be installed over the entire surface. A fully compatible polyethylene tape shall be used to seal the edges of the sheets to provide a vapor tight membrane. Sheet edges shall be lapped not less than 150 mm. Sufficient material shall be provided to avoid inducing stresses in the sheets due to stretching or binding. All tears or punctures that are visible in the finished surface at any time during the construction process shall be sealed with polyethylene tape.

3.1.8 Wall Liner

Wall liner shall be securely fastened into place in accordance with the manufacturer's recommendation and in a manner to present a neat appearance.

3.2 FIELD PAINTING

Immediately upon detection, abraded or corroded spots on shop-painted surfaces shall be wire brushed and touched up with the same material used for the shop coat. Shop-primed ferrous surfaces exposed on the outside of the building and all shop-primed surfaces of doors and windows shall be painted with two coats of an approved exterior enamel. Factory color finished surfaces shall be touched up as necessary with the manufacturer's recommended touch-up paint.

CONTRACTOR'S FIVE (5) YEAR NO PENAL SUM WARRANTY
FOR
METAL BUILDING SYSTEM

FACILITY
DESCRIPTION:_____

BUILDING
NUMBER:_____

CORPS OF ENGINEERS CONTRACT
NUMBER:_____

CONTRACTOR

CONTRACTOR:_____
ADDRESS:_____

POINT OF
CONTACT:_____

TELEPHONE
NUMBER:_____

OWNER

OWNER:_____

ADDRESS:_____

POINT OF
CONTACT:_____

TELEPHONE
NUMBER:_____

CONSTRUCTION AGENT

CONSTRUCTION
AGENT:_____
ADDRESS:_____

POINT OF CONTACT:_____

TELEPHONE
NUMBER:_____

CONTRACTOR'S FIVE (5) YEAR NO PENAL SUM WARRANTY
FOR
METAL BUILDING SYSTEM
(continued)

THE METAL BUILDING SYSTEM INSTALLED ON THE ABOVE NAMED BUILDING IS WARRANTED BY [_____] FOR A PERIOD OF FIVE (5) YEARS AGAINST WORKMANSHIP AND MATERIAL DEFICIENCIES, WIND DAMAGE AND STRUCTURAL FAILURE WITHIN PROJECT SPECIFIED DESIGN LOADS, AND LEAKAGE. THE METAL BUILDING SYSTEM COVERED UNDER THIS WARRANTY SHALL INCLUDE, BUT SHALL NOT BE LIMITED TO, THE FOLLOWING: FRAMING AND STRUCTURAL MEMBERS, ROOFING AND SIDING PANELS AND SEAMS, INTERIOR OR EXTERIOR GUTTERS AND DOWNSPOUTS, ACCESSORIES, TRIM, FLASHINGS AND MISCELLANEOUS BUILDING CLOSURE ITEMS SUCH AS DOORS AND WINDOWS (WHEN FURNISHED BY THE MANUFACTURER), CONNECTORS, COMPONENTS, AND FASTENERS, AND OTHER SYSTEM COMPONENTS AND ASSEMBLIES INSTALLED TO PROVIDE A WEATHERTIGHT SYSTEM; AND ITEMS SPECIFIED IN OTHER SECTIONS OF THESE SPECIFICATIONS THAT BECOME PART OF THE METAL BUILDING SYSTEM. ALL MATERIAL AND WORKMANSHIP DEFICIENCIES, SYSTEM DETERIORATION CAUSED BY EXPOSURE TO THE ELEMENTS AND/OR INADEQUATE RESISTANCE TO SPECIFIED SERVICE DESIGN LOADS, WATER LEAKS AND WIND UPLIFT DAMAGE SHALL BE REPAIRED AS APPROVED BY THE CONTRACTING OFFICER

ALL MATERIAL DEFICIENCIES, WIND DAMAGE, STRUCTURAL FAILURE AND LEAKAGE ASSOCIATED WITH THE METAL BUILDING SYSTEM COVERED UNDER THIS WARRANTY SHALL BE REPAIRED AS APPROVED BY THE CONTRACTING OFFICER. THIS WARRANTY SHALL COVER THE ENTIRE COST OF REPAIR OR REPLACEMENT, INCLUDING ALL MATERIAL, LABOR, AND RELATED MARKUPS. THE ABOVE REFERENCED WARRANTY COMMENCED ON THE DATE OF FINAL ACCEPTANCE ON [_____] AND WILL REMAIN IN EFFECT FOR STATED DURATION FROM THIS DATE.

SIGNED, DATED, AND NOTARIZED (BY COMPANY PRESIDENT)

_____

(Company President) (Date)

CONTRACTOR'S FIVE (5) YEAR NO PENAL SUM WARRANTY
FOR
METAL BUILDING SYSTEM
(continued)

THE CONTRACTOR SHALL SUPPLEMENT THIS WARRANTY WITH WRITTEN WARRANTIES FROM THE MANUFACTURER AND/OR INSTALLER OF THE METAL BUILDING SYSTEM, WHICH SHALL BE SUBMITTED ALONG WITH THE CONTRACTOR'S WARRANTY. HOWEVER, THE CONTRACTOR WILL BE ULTIMATELY RESPONSIBLE FOR THIS WARRANTY AS OUTLINED IN THE SPECIFICATIONS AND AS INDICATED IN THIS WARRANTY.

EXCLUSIONS FROM COVERAGE

1. NATURAL DISASTERS, ACTS OF GOD (LIGHTNING, FIRE, EXPLOSIONS, SUSTAINED WIND FORCES IN EXCESS OF THE DESIGN CRITERIA, EARTHQUAKES, AND HAIL).

2. ACTS OF NEGLIGENCE OR ABUSE OR MISUSE BY GOVERNMENT OR OTHER PERSONNEL, INCLUDING ACCIDENTS, VANDALISM, CIVIL DISOBEDIENCE, WAR, OR DAMAGE CAUSED BY FALLING OBJECTS.

3. DAMAGE BY STRUCTURAL FAILURE, SETTLEMENT, MOVEMENT, DISTORTION, WARPAGE, OR DISPLACEMENT OF THE BUILDING STRUCTURE OR ALTERATIONS MADE TO THE BUILDING.

4. CORROSION CAUSED BY EXPOSURE TO CORROSIVE CHEMICALS, ASH OR FUMES GENERATED OR RELEASED INSIDE OR OUTSIDE THE BUILDING FROM CHEMICAL PLANTS, FOUNDRIES, PLATING WORKS, KILNS, FERTILIZER FACTORIES, PAPER PLANTS, AND THE LIKE.

5. FAILURE OF ANY PART OF THE BUILDING SYSTEM DUE TO ACTIONS BY THE OWNER WHICH INHIBIT FREE DRAINAGE FROM THE ROOF, AND GUTTERS AND DOWNSPOUTS; OR CONDITIONS WHICH CREATE PONDING WATER ON THE ROOF OR AGAINST THE BUILDING SIDING.

6. THIS WARRANTY APPLIES TO THE METAL BUILDING SYSTEM. IT DOES NOT INCLUDE ANY CONSEQUENTIAL DAMAGE TO THE BUILDING INTERIOR OR CONTENTS WHICH IS COVERED BY THE WARRANTY OF CONSTRUCTION CLAUSE INCLUDED IN THIS CONTRACT.

7. THIS WARRANTY CANNOT BE TRANSFERRED TO ANOTHER OWNER WITHOUT WRITTEN CONSENT OF THE CONTRACTOR AND THIS WARRANTY AND THE CONTRACT PROVISIONS WILL TAKE PRECEDENCE OVER ANY CONFLICTS WITH STATE STATUTES. REPORTS OF LEAKS AND BUILDING SYSTEM DEFICIENCIES SHALL BE RESPONDED TO WITHIN 48 HOURS OF RECEIPT OF NOTICE BY TELEPHONE OR IN WRITING FROM EITHER THE OWNER, OR CONTRACTING OFFICER. EMERGENCY REPAIRS, TO PREVENT FURTHER ROOF LEAKS, SHALL BE INITIATED IMMEDIATELY; A WRITTEN PLAN SHALL BE SUBMITTED FOR APPROVAL TO REPAIR OR REPLACE THIS SSSMR SYSTEM WITHIN SEVEN CALENDAR DAYS. ACTUAL WORK FOR PERMANENT REPAIRS OR REPLACEMENT SHALL BE STARTED WITHIN 30 DAYS AFTER RECEIPT OF NOTICE, AND COMPLETED WITHIN A REASONABLE TIME FRAME. IF THE CONTRACTOR FAILS TO ADEQUATELY RESPOND TO THE WARRANTY PROVISIONS, AS STATED

CONTRACTOR'S FIVE (5) YEAR NO PENAL SUM WARRANTY
FOR
METAL BUILDING SYSTEM
(Exclusions from Coverage Continued)

IN THE CONTRACT AND AS CONTAINED HEREIN, THE CONTRACTING OFFICER MAY HAVE THE METAL BUILDING SYSTEM REPLACED OR REPAIRED BY OTHERS AND CHARGE THE COST TO THE CONTRACTOR. IN THE EVENT THE CONTRACTOR DISPUTES THE EXISTENCE OF A WARRANTABLE DEFECT, THE CONTRACTOR MAY CHALLENGE THE OWNER'S DEMAND FOR REPAIRS AND/OR REPLACEMENT DIRECTED BY THE OWNER OR CONTRACTING OFFICER EITHER BY REQUESTING A CONTRACTING OFFICER'S DECISION, UNDER THE CONTRACT DISPUTES ACT, OR BY REQUESTING THAT AN ARBITRATOR RESOLVE THE ISSUE. THE REQUEST FOR AN ARBITRATOR MUST BE MADE WITHIN 48 HOURS OF BEING NOTIFIED OF THE DISPUTED DEFECTS. UPON BEING INVOKED THE PARTIES SHALL, WITHIN 10 DAYS JOINTLY REQUEST A LIST OF FIVE (5) ARBITRATORS FROM THE FEDERAL MEDIATION AND CONCILIATION SERVICE. THE PARTIES SHALL CONFER WITHIN 10 DAYS AFTER RECEIPT OF THE LIST TO SEEK AGREEMENT ON AN ARBITRATOR. IF THE PARTIES CANNOT AGREE ON AN ARBITRATOR, THE CONTRACTING OFFICER AND THE PRESIDENT OF THE CONTRACTOR'S COMPANY WILL STRIKE ONE (1) NAME FROM THE LIST ALTERNATIVELY UNTIL ONE NAME REMAINS. THE REMAINING PERSON SHALL BE THE DULY SELECTED ARBITRATOR. THE COSTS OF THE ARBITRATION, INCLUDING THE ARBITRATOR'S FEE AND EXPENSES, COURT REPORTER, COURTROOM OR SITE SELECTED ETC., SHALL BE BORNE EQUALLY BETWEEN THE PARTIES. EITHER PARTY DESIRING A COPY OF THE TRANSCRIPT SHALL PAY FOR THE TRANSCRIPT. A HEARING WILL BE HELD AS SOON AS THE PARTIES CAN MUTUALLY AGREE. A WRITTEN ARBITRATOR'S DECISION WILL BE REQUESTED NOT LATER THAN 30 DAYS FOLLOWING THE HEARING. THE DECISION OF THE ARBITRATOR WILL NOT BE BINDING; HOWEVER, IT WILL BE ADMISSIBLE IN ANY SUBSEQUENT APPEAL UNDER THE CONTRACT DISPUTES ACT. A FRAMED COPY OF THIS WARRANTY SHALL BE POSTED IN THE MECHANICAL ROOM OR OTHER APPROVED LOCATION DURING THE ENTIRE WARRANTY PERIOD.

-- End of Section --

SECTION 14602

CRANES, SINGLE-GIRDER BRIDGE, MONORAIL AND JIB

PART 1 GENERAL

1.1 REFERENCES

The publications listed below form a part of this specification to the extent referenced. The publications are referred to in the text by basic designation only.

AMERICAN BEARING MANUFACTURERS ASSOCIATION (ABEMA)

ABEMA 9	(1990) Load Ratings and Fatigue Life for Ball Bearings
ABEMA 11	(1990) Load Ratings and Fatigue Life for Roller Bearings

AMERICAN NATIONAL STANDARDS INSTITUTE (ANSI)

ANSI C80.1	(1990) Rigid Steel Conduit - Zinc Coated
ANSI MH27.1	(1981) Underhung Cranes and Monorail Systems

AMERICAN SOCIETY FOR TESTING AND MATERIALS (ASTM)

ASTM A 36	(1994) Carbon Structural Steel
ASTM B 633	(1985; R 1994) Electrodeposited Coatings of Zinc on Iron and Steel
ASTM E 10	(1993) Brinell Hardness of Metallic Materials

AMERICAN SOCIETY OF MECHANICAL ENGINEERS (ASME)

ASME HST-1M	(1989) Electric Chain Hoists
ASME HST-4M	(1991) Overhead Electric Wire Rope Hoists

AMERICAN WELDING SOCIETY (AWS)

AWS D1.1	(1994) Structural Welding Code - Steel

NATIONAL ELECTRICAL MANUFACTURERS ASSOCIATION (NEMA)

NEMA ICS 6	(1993) Enclosures for Industrial Control and Systems
NEMA KS 1	(1990) Enclosed and Miscellaneous Distribution Equipment Switches (600 Volts Maximum)

NATIONAL FIRE PROTECTION ASSOCIATION (NFPA)

NFPA 70	(1993) National Electrical Code

UNDERWRITERS LABORATORIES (UL)

UL 50	(1992; Rev thru Nov 1994) Enclosures for Electrical Equipment
UL 674	(1989; Rev Aug 1994) Electric Motors and Generators for Use in Division I Hazardous (Classified) Locations

1.2 SYSTEM DESCRIPTION

1.2.1 General Requirements

1.2.1.1 Standard Products

Materials and equipment shall be standard products of manufacturers regularly engaged in the fabrication of cranes and hoists and shall essentially duplicate items which have been in satisfactory use for at least 2 years prior to bid opening. Any company licensed by a crane and hoist manufacturer to manufacture cranes and hoists bearing their name shall have the design and components approved by the licensor prior to submission to the Government for approval.

1.2.1.2 Nameplates

Each major component of equipment shall have the manufacturer's name, address, type or style, model or catalog number, and serial number on a metal plate secured to the equipment.

1.2.1.3 Verification of Dimensions

The Contractor shall verify all dimensions in the field and shall advise the Contracting Officer of any discrepancy before performing any work.

1.2.1.4 Welding

Welding shall be in accordance with AWS D1.1.

1.2.2 Design Criteria

The hoist(s) shall be designed to operate in the spaces indicated. The hook coverage and hook vertical travel shall not be less than that indicated.

1.2.2.1 Classification

The monorail system shall be designed and constructed to ANSI MH27.1 Class service requirements.

The hoist shall be designed and constructed to ASME HST-1M and ASME HST-4M, Class H3, service requirements for operation in nonhazardous environment.

1.2.2.2 Hoist Characteristics

Hoist shall be an electric-chain hoist of type, class, control, suspension, lift, and operating characteristics specified. Each hoist shall have the capacity, lift-height, suspension, power source, and operating

characteristics indicated and as follows:

a. Each hoist shall have the capacity indicated.

b. Each hoist shall have the minimum height of lift indicated.

c. The hoist shall be the lug-suspension type mounted on an electric-motor-driven trolley.

d. Each hoist shall be standard headroom or minimum headroom type as indicated.

e. Components of the hoist shall be designed and constructed for safety of operation and durability of components. Replacement parts shall be interchangeable and readily accessible.

1.2.2.3 NOT USED

1.2.2.4 Monorail Characteristics

The monorail shall be of the patented beam style.

1.2.3 Definitions

1.2.3.1 Capacity

Capacity shall mean the rated load in pounds, or tons of 2,000 pounds each, specified by the manufacturer for the hoist and marked plainly on the hoist and loadblock so as to be clearly legible. In determining the applied load, the weight of the handling devices shall be included.

1.2.3.2 Hoisting Speed

Hoisting speed shall mean the velocity in feet per minute at which the hoist will lift the rated load. Actual lifting speed shall be within plus or minus 10 percent of the manufacturer's rating.

1.2.3.3 NOT USED

1.2.3.4 Rated Lift

Rated lift shall mean the distance between the upper and lower elevations of travel of the load block.

1.2.3.5 Headroom

Headroom shall be measured with the load hook in the highest position with full load which is the distance between the saddle of the load hook and the following points:

a. The bottom of the beam when S-shape runways are used.

b. The top of the bottom flange for all flat, wheel-bearing flange surfaces.

1.2.3.6 Minimum Radius

Minimum radius shall mean the smallest radius to the centerline of the beam or track on which the trolley will operate properly.

1.2.3.7 Trolley Speed

Trolley speed shall mean the velocity in feet per minute at which a motor-driven trolley with hoist will travel carrying the rated load on level track; actual speed shall be within plus or minus 10 percent of the manufacturer's rating.

1.3 SUBMITTALS

Government approval is required for submittals with a "GA" designation; submittals having an "FIO" designation are for information only. The following shall be submitted in accordance with Section 01330 SUBMITTAL PROCEDURES:

SD-01 Data

Hoist System; GA.

Manufacturer's catalog data shall be submitted showing the equipment and accessories to be provided.

Spare Parts; FIO.

Spare parts data shall be submitted and shall include a complete list of parts and supplies, with current unit prices and source of supply.

SD-04 Drawings

Wiring and Schematic diagrams; GA.

Detailed drawings shall be submitted containing complete wiring and schematic diagrams and any other details required to demonstrate that the system has been coordinated and will properly function as a unit. Drawings shall show proposed layout, anchorage of equipment and appurtenances, and equipment relationship to other parts of the work including clearances for maintenance and operation.

SD-06 Instructions

Hoist System; FIO.

Diagrams, instructions, and other sheets proposed for posting shall be submitted.

SD-09 Reports

Electrification System Tests; GA.

Results of electrification system tests shall be submitted.

Acceptance Testing; FIO.

Test reports in booklet form shall be submitted showing all field tests performed to adjust each component and all field tests performed to prove compliance with the specified performance criteria, upon completion and testing of the installed system. The report shall include the information as required by paragraph ACCEPTANCE TESTING.

SD-13 Certificates

Hoist; FIO. Hoist Trolley and Track; FIO. Hoist Control; FIO.

Certification shall be submitted attesting that each hoist, hoist trolley and track, and hoist control has been factory tested for rated load capacity and operation, and that each hoist complies with the requirements specified.

Sample Hoist; FIO.

Certification shall be submitted attesting that a sample hoist of each type specified has been factory tested for the tests specified.

Thermal Monitoring of Motor Components; FIO.

Certified results of thermal monitoring of motor components during tests shall be submitted.

Electric Hoists; FIO. Trolleys; FIO. Wiring; FIO. Contact Conductors; FIO. Controls; FIO. Overcurrent Protection; FIO. Grounding; FIO.

Certification shall be submitted attesting that electric hoists, trolleys, wiring, contact conductors, controls, overcurrent protection, and grounding conform to NFPA 70 and to UL standards. The label or listing with reexamination by the UL will be accepted as evidence that the materials conform to this requirement and to NFPA 70.

SD-18 Records

Hook Material; FIO. Heat Treatment; FIO.

Record of hook material and any heat treatment performed shall be submitted and shall be stamped on the hook shank or documented in certification papers furnished with the hooks.

SD-19 Operation and Maintenance Manuals

Operation Manuals; GA.

Six copies of operation manuals shall be furnished for the equipment furnished. Operation manuals shall detail the step-by-step procedures required for system startup, operation, and shutdown. Operation manuals shall include the manufacturer's name, model number, parts list, and brief description of all equipment and their operating features. Operation manuals shall include a copy of the acceptance test report for information and future reference. Operation manuals shall include an overall description of the system describing any unique features that may need special attention.

Maintenance Manuals; GA.

Six copies of maintenance manuals shall be furnished for the equipment furnished. Maintenance manuals shall list routine maintenance procedures, possible breakdowns and repairs, and troubleshooting guides. Maintenance manuals shall include piping, layout diagrams, equipment layout diagrams, and wiring and control diagrams of the system as installed. Maintenance manuals shall include a spare parts list of manufacturers recommended spare parts that should be maintained onsite and any long lead time items should

be clearly identified. Maintenance manuals shall contain replacement part numbers for the entire assembly.

1.4 DELIVERY AND STORAGE

Equipment delivered shall be placed in indoor storage, protected from the weather, humidity and temperature variations, dirt and dust, or other contaminants.

PART 2 PRODUCTS

2.1 ELECTRIC HOIST

2.1.1 General

Electric hoist shall be of capacity, lift, type, suspension, headroom, and materials specified. Each unit shall be factory wired and ready for operation. Load-carrying parts of the hoist shall be designed so that the calculated static stress of the material, based on the rated capacity, will not exceed 20 percent of the average theoretical strength of the material. Each hoist shall be factory lubricated and shall be complete and ready for operation with the specified controls and accessories.

2.1.2 Types of Electric Hoists

2.1.2.1 Electric Chain Hoist

Electric chain hoist shall be equipped with a standard chain and hook assembly as specified, with no-corrosion or spark-resistant requirements.

2.1.2.2 Electric Wire-Rope Hoists

Electric wire-rope hoists shall be equipped with a noncorroding, nonsparking wire-rope and hook assembly.

2.1.3 Hoist Speed

Each electric chain and wire-rope hoist speed shall be as indicated on the drawings.

2.1.4 Load and Motor Brakes

Load brake shall be a totally enclosed, automatic, mechanical-type brake with a hardened-steel, Weston-type ratchet and pawl mechanism that will hold the capacity load of the hoist at any point when the motor is stopped.

2.2 NOT USED

2.3 NOT USED

2.4 TROLLEYS

2.4.1 Paint

Each trolley assembly shall be factory-painted, designed specifically for use with the specified hoist, and shall be furnished by the hoist manufacturer. Paint finish shall be the same type and quality specified for the hoist.

2.4.2 Wheels

2.4.2.1 Load Distribution

Each trolley assembly shall have not less than four wheels. Sufficient wheels shall be provided to properly distribute the load. The load on a wheel shall not exceed 1,200 DW pounds where D equals the diameter of the wheel in inches and W equals the width of the rail head or the nominal length of bearing on the tread.

2.4.2.2 Design and Type

Wheels shall be single-flange type manufactured from forged alloy steel with machined, hardened treads and flanges, or high-strength cast or nodular iron with machined flanges and treads, chill-hardened not less than 1/16 inch deep. Flanged wheels for motor-driven trolleys shall have treads and flanges hardened to not less than No. 320 Brinell hardness. Manually driven, trolley-wheel treads shall be hardened to not less than Brinell hardness No. 245 as defined in ASTM E 10. Wheels shall be designed to operate on sloped or flat flange I-beams. Noncorroding, nonsparking trolley wheels shall be AISC Type 304 corrosion-resistant steel or suitable copper alloy.

2.4.2.3 Bearings

Trolley wheels shall be carried on sealed, permanently lubricated, antifriction bearings designed for axial and thrust loading. Bearings shall conform to the applicable requirements of ABEMA 9 and ABEMA 11. Bearings shall have an L-10 life of 3,000 hours or more, as defined by ABEMA 9 or ABEMA 11 as applicable. Bearings shall be provided with fittings for pressure lubrication.

2.4.3 Side Plates, Pins, and Axles

2.4.3.1 Side Plates

Side plates shall be fabricated from structural-quality rolled-steel plate milled to the required profile with integral bosses where necessary to support equalizing pins; side plates shall be fitted with steel end bumpers.

2.4.3.2 Pins and Axles

Equalizing pins and axles shall be heat-treated alloy steel, machined and finish ground to the required size.

2.4.4 Gearing

2.4.4.1 Gears

Gears shall be cut from heat-treated alloy steel accurately machined into spur, helical, and pinion gears, conforming to AGMA requirements.

2.4.4.2 Drive Pinions

Drive pinions shall be carburized alloy steel, malleable iron, or bronze, with cut or cast teeth, conforming to AGMA requirements.

2.4.4.3 Clamps

Plain trolleys and geared, manual-drive trolleys shall have suitable, quick-acting, steel track clamps. Clamps shall be adjustable for wear and shall not injure track flanges. They shall function satisfactorily on curved and straight track and shall be capable of withstanding a pull equivalent to one-third the rated capacity of the hoist when executed parallel to the track.

2.4.5 Safety Hangers or Lugs

Safety hangers or lugs shall be steel and shall be integral with, or fastened to, each hoist frame or to trolley frame. They shall ride free above the bottom flange of the beam. Hanger shall be of sufficient capacity to hold the hoist, fully loaded, in the I-beam in case of wheel or axle failure. Safety factor of each part of trolley assembly shall be not less than 5, based on the ultimate strength of the material used.

2.5 TROLLEY TYPE

2.5.1 NOT USED

2.5.2 NOT USED

2.5.3 Electric-Motor-Driven Trolleys

Trolley shall be an electric-motor-driven geared type conforming to NFPA 70, the specified general trolley requirements, and the requirements specified.

Trolley speed shall be not more than 75 feet per minute.

2.6 NOT USED

2.7 NOT USED

2.8 MONORAIL TRACK

Monorail track, splice plates, and hangers shall be painted, hot-rolled AISC structural steel "S" shapes or "W" shapes and plates conforming to ASTM A 36, of size and weight as required for the specified hoist. The upper surface of the lower flange shall be free from bumps, depressions, and irregularities.

2.8.1 Track Design

The track shall be designed with a minimum safety factor of 5. Deflection of track shall not exceed 1/450 of the span, as determined by total load of trolley, track, hoist, and full-capacity load. Track curve radii shall permit smooth trolley operation without binding.

2.8.2 Flanges

Flanges shall be smoothly curved and without deformation.

2.8.3 Miscellaneous Track Items

Necessary clamps, hanger rods, hangers, track splice plates, safety end stops, fasteners, and fittings shall be provided as required for a complete system.

2.8.3.1 Splice Plates and Fasteners

Web-type splice plates or other suitable couplings shall be installed at track joints to provide flush and level connections, with maximum gap between adjacent ends at load-carrying ends not exceeding 1/16 inch; 3/16 inch at switches. Splice fasteners shall be regular hexagon or special, flat-head fasteners.

2.8.3.2 Safety End Stops

Safety stops capable of withstanding the impact of a fully loaded hoist and trolley shall be provided.

2.8.3.3 Fittings

Fittings with means for not less than 1-inch vertical adjustment of the track for level erection shall be provided, with provision for additional adjustment after the system has been in operation.

2.8.4 Finishing

The finished monorail shall be inspected after erection, and fasteners, welds, abrasions, and handling marks shall be painted in the finish color. Brackets and hangers of the monorail electrification system shall be painted in the finish color of the monorail track.

2.9 NOT USED

2.10 ELECTRICAL

Materials and installation, including electrical wiring, contact conductors, controls, overcurrent protection, and grounding shall meet the requirements of NFPA 70 and applicable UL and NEMA standards and specified requirements.

2.10.1 Power Supply

Electrical power for operation of the hoist will be supplied from the nominal 480 volt, 3 phase, 60-Hz alternating-current (a-c) power distribution system.

2.10.1.1 Hoist and Trolley Incoming Power Supply

a. The contact conductor system shall be furnished complete with collector and all necessary accessories for mounting the contact assembly.

b. The contact conductor system shall be of the enclosed type and shall be rated for 600 volts AC with a continuous current carrying capacity as required by the total connected load of all the hoists. Voltage drop shall be limited to not more than 1 percent from the power input connection at the main contact conductors to the input terminals of the crane main circuit breaker when the crane is operating with the greatest load condition and is at the maximum distance from the point of connection of the power feeder. Mounting supports shall provide means to accommodate contraction and expansion due to temperature changes and to permit installation with proper alignment. The mounting supports shall be spaced at intervals of not more than 10 feet. All mounting bolts and screws shall be of a suitable corrosion-resisting

material. Standard products of the manufacturer furnishing the conductors shall be provided to connect the power supply to the conductors. Contraction and expansion sections shall be provided at each monolith joint. Except as otherwise specified, the contact conductor system shall conform to the following:

(1) Conductor insulation shall be of the nonburning type, suitable for outdoor service at an ambient temperature of 100 degrees F. It shall be designed and installed so as to accommodate independent and/or unequal movements of the conductors and enclosures.

(2) Stainless-steel hanger clamps with insulators shall be used to support the insulated conductor.

c. Collector shall have two individually spring-loaded conductor contact shoes for each phase or shall have no exposed current carrying surfaces for each main conductor and shall be articulated, if necessary, to maintain full contact against the contact conductor. Contact shoes shall be of graphite bronze or other suitable material as approved by the Contracting Officer, and shall be suitable for use with contact conductors furnished. The collector mounting shall provide means for adjustment as required to make proper contact and to travel properly on the contact conductors. Supporting wheels, if required, shall be provided with self-lubricating bearings.

2.10.2 Motor Controller

Motor controller shall be a reversing-type magnetic starter with thermal-overload protection, molded case circuit breaker, and control transformer operated by a pushbutton control station. Controller and control station shall be mechanically or electrically interlocked to preclude possibility of operating opposing control circuits simultaneously.

2.10.2.1 Contactor Fingers

Contactor fingers shall be adjustable and shall have renewable tips.

2.10.2.2 Transformer

Transformer shall reduce the control-circuit voltage to 120 volts AC, to 48 volts AC, or to 24 volts AC.

2.10.2.3 Enclosure for Mounting

Motor controller shall be mounted in either a gasketed cast metal or sheet metal enclosure, as required or noted, with hinged door conforming to the requirements of UL 50. Motor controller enclosures, conplying with NEMA ICS 6, shall be NEMA, Type 1.

2.10.3 Pendant Control Station

Each hoist shall have a pendant-mounted conductor cable and pushbutton station with a strain-reliever chain or cable permanently attached to the hoist frame and integral with the pendant conductor cable. The control station shall be a full-guarded, momentary-contact, pushbutton type with each button clearly marked to indicate its function. A separate button or a single button providing steps for each speed of multispeed hoists or trolleys shall be provided. The pushbuttons shall return to the off (normally open contacts) position when pressure is released by operator.

The pushbutton station shall be grounded to the hoist. The strain reliever chain or cable shall not be used as a grounding circuit.

2.10.4 Mainline Disconnect Switch

A mainline disconnect switch shall be provided and shall be a surface-mounted, heavy-duty, single-throw, air-break, enclosed type conforming to NEMA KS 1 as indicated. Disconnect switch shall be fused. Enclosure shall be NEMA Type 1.

2.10.5 Hoist Limit Switches

Adjustable upper-limit switch shall be provided to prevent overtravel of the hook or load block in the hoisting direction. Limit switch shall be arranged to stop the hoist motor and apply the motor brake before reaching the uppermost safe limit of travel. In case of hook overtravel, the motor shall automatically and momentarily be reversed.

2.10.6 Trolley Travel Limit Switches

Limit switches shall be mounted to the monorail and trolley, respectively, to interrupt current to the trolley controls. Adjustable limit switch actuators shall be installed on both ends to actuate the limit switches and stop the trolley prior to contacting the bumpers. Monorails with movable sections or switches shall be provided with limit switches to stop the trolley from derailing or contacting an open section.

2.10.7 Hoist Motors

Hoist motor shall be a high-starting torque, high-slip, 30-minute time rated, reversible electric motor specifically designed for hoist duty and capable of operating at the specified duty class, capacity, and speed. The motor shall be 460-volts, 3-phase, 60-hertz and horsepower as recommended by manufacturer for capacity and lift speed of hoist. The hoist motors shall be provided with Class B insulation, and motor enclosures shall be totally enclosed, nonventilated (TENV). Enclosure shall be fitted with a UL-approved drain and breather and shall be certified and labeled in accordance with UL 674, Class 1, Groups C and D.

2.10.8 Trolley Motors

Trolley motors shall be single-speed, single-winding conforming to the requirements for hoist motors except they may be NEMA design B (high torque and slip not required).

2.10.9 Motor Brake

Motor brake shall be an externally adjustable, electrically operated single- or multiple-friction disk brake that shall apply automatically when the power is off. The brake shall be capable of holding 125 percent of the rated load from any operating speed. The brake shall hold a static load equal to 150 percent of the rated capacity of the hoist.

Trolley unit shall have an automatic, adjustable, solenoid-operated, electric brake designed for trolley application. Brake shall apply and release smoothly during starts and stops to minimize pendulum action of the load. Braking torque shall be not less than 100 percent of motor torque and shall match motor torque characteristics.

2.10.10 Conduit and Wire

2.10.10.1 Conduit

Conduit between feeder enclosure and disconnect switches and fixed control stations shall be zinc-coated rigid-steel conduit, couplings, elbows, bends, and nipples conforming to ANSI C80.1. Zinc coating shall be an electrodeposited coating conforming to ASTM B 633.

2.10.10.2 Wire

Building wire for use in conduits, raceways, and wireways in wet or dry locations shall be single-conductor, 600-volt, heat- and moisture-resistant Type RHW or THW with a maximum temperature rating of 75 degrees C, or cross-linked thermosetting, polyethylene insulation with a temperature rating of 90 degrees C.

PART 3 EXECUTION

3.1 ERECTION

Erection shall be in accordance with the manufacturer's instructions.

3.2 INSTALLATION OF MONORAIL TRACK

Monorail tracks shall be installed in accordance with the applicable requirements of ANSI MH27.1. Tracks shall be accurately assembled to the lines and elevations indicated. Fastening of splices shall be performed after the abutting surfaces have been brought completely in contact. Connections shall be bolted or welded connections. Splices will be permitted only when indicated. Erection bolts used in welded construction may be tightened securely and left in place when they form no interference to trolley operation. If erection bolts are removed, the holes shall be plug welded and ground smooth. Monorail track shall be installed plumb and level to a tolerance of not more than 1 inch in 100 feet from the indicated elevation. The track shall be free of burrs, kinks, and deformation. Curves shall be smooth and even with no kinks or sharp bends. Track flanges shall be smooth and level. Welded joints and connections shall be ground smooth and offer no obstruction to trolley-wheel movement.

3.3 ONSITE ELECTRIFICATION SYSTEM TESTS

Electrification system shall be given continuity and insulation testsafter the installation has been completed but before equipment is energized. Contractor shall provide necessary test equipment, labor, and personnel to perform the tests as specified. Electrification system equipment shall be completely isolated from all extraneous electrical connections. Circuit breakers in panelboards, and other disconnecting devices shall be used to isolate the equipment under test. Insulation tests on equipment and wiring shall be conducted using a 1,000-volt, insulation-testing instrument. Readings shall be recorded every minute and until three equal and consecutive readings are obtained. The resistance between phase conductors and between phase conductors and ground shall be not less than 1 megohm. Test data shall be recorded and shall include megohm readings versus time. Final acceptance shall depend upon satisfactory performance under test. Electrification system shall not be energized until recorded test data of the electrification system tests are approved.

3.4 ACCEPTANCE TESTING

Acceptance testing shall comply with the following paragraphs.

3.4.1 Acceptance Test

The Contractor shall provide all personnel necessary to conduct the tests including but not limited to operators, riggers, rigging gear, and test weights. Testing shall be performed in the presence of Contracting Officer. The Contractor shall notify the Contracting Officer 14 days prior to testing operations.

3.4.1.1 Test Sequence

The equipment shall be tested according to the applicable paragraphs of this procedure in the sequence provided.

3.4.1.2 Test Data

Operating and startup current measurements shall be recorded for electrical equipment (motors and coils) using appropriate instrumentation. Speed measurements shall be recorded as required by the facility evaluation tests (normally at 100-percent load). Recorded values shall be compared with design specifications or manufacturer's recommended values; abnormal differences shall be explained in the remarks and submitted for approval or appropriate adjustments performed. In addition, high temperatures or abnormal operation of any equipment or machinery shall be noted, investigated, and corrected. Hoist and trolley speeds should be recorded during each test cycle.

3.4.1.3 Equipment Monitoring

During the load test, improper operation or poor condition of safety devices, electrical components, mechanical equipment, and structural assemblies shall be monitored. Observed defects critical to continued testing shall be reported immediately to the Contracting Officer and testing shall be suspended until the deficiency is corrected. During and immediately following each load test, the following inspections shall be made:

a. Inspect for evidence of bending, warping, permanent deformation, cracking, or malfunction of structural components.

b. Inspect for evidence of slippage in wire-rope sockets and fittings.

c. Check for overheating in brake operation; check for proper stopping. All safety devices, including emergency stop switches and POWER OFF pushbuttons, shall be tested and inspected separately to verify proper operation of the brakes.

d. Check for abnormal noise or vibration and overheating in machinery drive components.

e. Check wire rope sheaves and drum spooling chain sprockets for proper operation, freedom of movement, abnormal noise, or vibration.

f. Check electrical drive components for proper operation, freedom from chatter, noise, or overheating.

g. Inspect external gears for abnormal wear patterns, damage, or

inadequate lubrication.

3.4.1.4 Hooks

Hooks shall be measured for hook-throat spread before and after load test. A throat dimension base measurement shall be established by installing two tram points and measuring the distance between these tram points (to within 1/64 inch). This base dimension shall be recorded. The distance between tram points shall be measured before and after load test. An increase in the throat opening by more than 1 percent from the base measurement shall be cause for rejection.

3.4.2 No-Load Testing

3.4.2.1 Hoist Operating and Limit Switch Test

The load hook shall be raised and lowered through the full range of normal travel at rated speed and other speeds of the crane. The load hook shall be stopped below the geared limit switch upper setting. In slow speed only, proper operation of upper and lower limit switches shall be verified. The test shall be repeated a sufficient number of times (minimum of three) to demonstrate proper operation. Brake action shall be tested in each direction.

3.4.2.2 Trolley Travel

The trolley shall be operated the full distance of the monorail rails exercising all drive speed controls in each direction. Brake operation shall be verified in each direction. In slow speed, the trolley bumpers shall contact the trolley stops located on the rails.

3.4.2.3 Hoist Loss of Power No-Load Test

The hooks shall be raised to a height of approximately 6 feet or less. While slowly lowering the hook, the main power source shall be disconnected verifying that the hook will not lower and that the brake will set.

3.4.2.4 Travel Loss of Power No-Load Test

With the hook raised to clear obstructions and the trolley traveling in slow speed, the main power source shall be disconnected, verifying that the trolley will stop and that the brake will set.

3.4.3 Load Test

3.4.3.1 Hoist

Unless otherwise indicated, the following tests shall be performed using a test load of 125 percent of rated load.

a. Dynamic Load Test: The test load shall be raised and lowered through the full-range while operating in each speed. The machinery shall be completely stopped at least once in each direction to ensure proper brake operation.

b. Hoist Loss of Power Test: After raising the test load to approximately 6 feet above ground level and while slowly lowering the test load, the main power source and the control pushbutton shall be released verifying that the brake will set and that the test load will

stop lowering.

c. Trolley Dynamic Load Test: While operating the trolley the full distance of the monorail rails in each direction with test load on the hook (one cycle), the proper functioning of drive speed control points and proper brake action shall be tested.

3.5 MANUFACTURER'S SERVICES

Services of a manufacturer's representative who is experienced in the installation, adjustment, erection, and operation of the equipment specified shall be provided. The representative shall supervise the installation, adjustment, and testing of the equipment.

3.6 FIELD TRAINING

A field training course shall be provided for designated operating staff members. Training shall be provided after the system is functionally complete but prior to final acceptance tests. Field training shall cover all of the items contained in the operating and maintenance instructions. The Contracting Officer shall be given at least 2 weeks advance notice of such training.

-- End of Section --

SECTION 15080

THERMAL INSULATION FOR MECHANICAL SYSTEMS

PART 1 GENERAL

1.1 REFERENCES

The publications listed below form a part of this specification to the extent referenced. The publications are referred to in the text by basic designation only. At the discretion of the government, the manufacturer of any material supplied will be required to furnish test reports pertaining to any of the tests necessary to assure compliance with the standard or standards referenced in this specification.

AMERICAN SOCIETY FOR TESTING AND MATERIALS (ASTM)

ASTM A 167	(1996) Stainless and Heat-Resisting Chromium-Nickel Steel Plate, Sheet, and Strip
ASTM B 209	(1996) Aluminum and Aluminum-Alloy Sheet and Plate
ASTM C 195	(1990) Mineral Fiber Thermal Insulating Cement
ASTM C 449	(1995) Mineral Fiber Hydraulic-Setting Thermal Insulating and Finishing Cement
ASTM C 533	(1985; R 1990) Calcium Silicate Block and Pipe Thermal Insulation
ASTM C 534	(1994) Preformed Flexible Elastomeric Cellular Thermal Insulation in Sheet and Tubular Form
ASTM C 547	(1995) Mineral Fiber Pipe Insulation
ASTM C 552	(1991) Cellular Glass Thermal Insulation
ASTM C 553	(1992) Mineral Fiber Blanket Thermal Insulation for Commercial and Industrial Applications
ASTM C 612	(1993) Mineral Fiber Block and Board Thermal Insulation
ASTM C 647	(1995) Properties and Tests of Mastics and Coating Finishes for Thermal Insulation
ASTM C 795	(1992) Thermal Insulation for Use in Contact With Austenitic Stainless Steel

ASTM C 871	(1995) Test Methods for Chemical Analysis of Thermal Insulation Materials for Leachable Chloride, Fluoride, Silicate, and Sodium Ions
ASTM C 920	(1994) Elastomeric Joint Sealants
ASTM C 921	(1989 R; 1996) Determining the Properties of Jacketing Materials for Thermal Insulation
ASTM C 1126	(1989; R 1994) Specification for faced or Unfaced Rigid Cellular Phenolic Thermal Insulation
ASTM D 3278	(1989) Test Methods for Flash Point of Liquids by Setaflash Closed-Cup Apparatus
ASTM E 84	(1996a) Surface Burning Characteristics of Building Materials
ASTM E 96	(1995) Water Vapor Transmission of Materials

MANUFACTURERS STANDARDIZATION SOCIETY OF THE VALVE AND FITTINGS INDUSTRY (MSS)

MSS SP-69	(1996) Pipe Hangers and Supports - Selection and Application

MIDWEST INSULATION CONTRACTORS ASSOCIATION (MICA)

MICA-01	(1993) National Commercial & Industrial Insulation Standards

1.2 SYSTEM DESCRIPTION

Field-applied insulation and accessories on mechanical systems shall be as specified herein; factory-applied insulation is specified under the piping, duct or equipment to be insulated. Field applied insulation materials required for use on Government-furnished items as listed in the SPECIAL CONTRACT REQUIREMENTS shall be furnished and installed by the Contractor.

1.3 GENERAL QUALITY CONTROL

1.3.1 Standard Products

Materials shall be the standard products of manufacturers regularly engaged in the manufacture of such products and shall essentially duplicate items that have been in satisfactory use for at least 2 years prior to bid opening.

1.3.2 Installer's Qualifications

Qualified installers shall have successfully completed three or more similar type jobs within the last 5 years.

1.3.3 Surface Burning Characteristics

Unless otherwise specified, insulation not covered with a jacket shall have

a flame spread rating no higher than 75 and a smoke developed rating no higher than 150. The outside surface of insulation systems which are located in air plenums, in ceiling spaces, and in attic spaces shall have a flame spread rating no higher than 25 and a smoke developed rating no higher than 50. Insulation materials located exterior to the building perimeter are not required to be fire-rated. Flame spread and smoke developed ratings shall be determined by ASTM E 84. Insulation shall be tested in the same density and installed thickness as the material that shall be used in the actual construction. Jackets shall comply with the flame spread and smoke developed ratings of 25/50 as determined by ASTM E 84.

1.3.4 Identification of Materials

Packages or standard containers of insulation, jacket material, cements, adhesives, and coatings delivered for use, and samples required for approval shall have manufacturer's stamp or label attached giving the name of the manufacturer and brand, and a description of the material.

1.4 SUBMITTALS

Government approval is required for submittals with a "GA" designation; submittals having an "FIO" designation are for information only. The following shall be submitted in accordance with Section 01300 SUBMITTAL PROCEDURES:

SD-14 Samples

Thermal Insulation Materials; GA.

A complete list of materials, including manufacturer's descriptive technical literature, performance data, catalog cuts, and installation instructions. The product number, k-value, thickness and furnished accessories for each mechanical system requiring insulation shall be included. Materials furnished under this section of the specification shall be submitted at one time.

After approval of materials and prior to applying insulation a booklet shall be prepared and submitted for approval. The booklet shall contain marked-up MICA-01 plates (or detail drawings showing the insulation material and insulating system) for each pipe, duct, or piece of equipment which is/are required to be insulated per this specification. The MICA plates shall be marked-up showing the materials to be installed in accordance with the requirements of this specification for the specific insulation application. The Contractor shall submit all MICA Plates required to show the entire insulating system, including Plates required to show insulation penetrations, vessel bottom and top heads, legs, and skirt insulation as applicable. If the Contractor elects to submit detailed drawings instead of marked-up MICA Plates, the detail drawings shall show cut-away, section views, and details indicating each component of the insulation system and showing provisions for insulating jacketing, and sealing portions of the equipment. For each type of insulation installation on the drawings, provide a label which identifies each component in the installation (i.e., the duct, insulation, adhesive, vapor retarder, jacketing, tape, mechanical fasteners, etc.) Indicate insulation by type and manufacturer. Three copies of the booklet shall be submitted at the jobsite to the Contracting Officer. One copy of the approved booklet shall remain with the insulation Contractor's display sample and two copies shall be provided for Government use.

After approval of materials actual sections of installed systems properly insulated in accordance with the specification requirements shall be displayed. Such actual sections must remain accessible to inspection throughout the job and will be reviewed from time to time for controlling the quality of the work throughout the construction site. Each material used shall be identified, by indicating on an attached sheet the specification requirement for the material and the material by each manufacturer intended to meet the requirement. Display sample sections will be inspected at the jobsite by the Contracting Officer. Approved display sample sections shall remain on display at the jobsite during the construction period. Upon completion of construction, the display sample sections will be closed and sealed.

Pipe Insulation Display Sections: Display sample sections shall include as a minimum an elbow or tee, a valve, dielectric unions and flanges, a hanger with protection shield and insulation insert, or dowel as required, at support point, method of fastening and sealing insulation at longitudinal lap, circumferential lap, butt joints at fittings and on pipe runs, and terminating points for each type of pipe insulation used on the job, and for hot pipelines and cold pipelines, both interior and exterior, even when the same type of insulation is used for these services.

Duct Insulation Display Sections: Display sample sections for rigid and flexible duct insulation used on the job. A display section for duct insulation exposed to weather shall be protected by enclosing with a temporary covering.

1.5 STORAGE

Materials shall be delivered in the manufacturer's unopened containers. Materials delivered and placed in storage shall be provided with protection from weather, humidity, dirt, dust and other contaminants by the Contractor. Insulation material and supplies that become dirty, dusty, wet, or otherwise contaminated may be rejected by the Contracting Officer.

PART 2 PRODUCTS

2.1 GENERAL MATERIALS

Materials shall be compatible and shall not contribute to corrosion, soften, or otherwise attack surfaces to which applied in either the wet or dry state. Materials to be used on stainless steel surfaces shall meet ASTM C 795 requirements. Materials shall be asbestos free and conform to the following:

2.1.1 Adhesives

2.1.1.1 NOT USED

2.1.1.2 Mineral Fiber Insulation Cement

Cement shall be in accordance with ASTM C 195.

2.1.1.3 Lagging Adhesive

Lagging adhesives shall be nonflammable and fire-resistant and shall have flame spread and smoke developed ratings of 25/50 when measured in accordance with ASTM E 84. Adhesives shall be either the Class 1 or Class 2 type as defined here. Class 1 adhesive shall be pigmented red and be

suitable for bonding fibrous glass cloth to faced and unfaced fibrous glass insulation board; for bonding cotton brattice cloth to faced and unfaced fibrous glass insulation board; for sealing edges of and bounding fibrous glass tape to joints of fibrous glass board; or for bonding lagging cloth to thermal insulation. Class 2 adhesive shall be pigmented white and be suitable for attaching fibrous glass insulation to metal surfaces. Lagging adhesives shall be applied in strict accordance with the manufacturer's recommendations.

2.1.2 Contact Adhesive

Adhesive may be dispersed in a nonhalogenated organic solvent with a low flash point (flash point less than minus 3.9 degrees C when tested in accordance with ASTM D 3278) or, dispersed in a nonflammable organic solvent which shall not have a fire point below 94 degrees C. The adhesive shall not adversely affect, initially or in service, the insulation to which it is applied, nor shall it cause any corrosive effect on metal to which it is applied. Any solvent dispersing medium or volatile component of the adhesive shall have no objectionable odor and shall not contain any benzene or carbon tetrachloride. The dried adhesive shall not omit nauseous, irritating, or toxic volatile matters or aerosols when the adhesive is heated to any temperature up to 100 degrees C. The adhesive shall be nonflammable and fire resistant.

2.1.3 Caulking

ASTM C 920, Type S, Grade NS, Class 25, Use A.

2.1.4 Corner Angles

Nominal 0.4060 mm (0.016 inch) aluminum 25 x 25 mm (1 x 1 inch) with factory applied kraft backing. Aluminum shall be ASTM B 209, Alloy 3003, 3105, or 5005.

2.1.5 Finishing Cement

Mineral fiber hydraulic-setting thermal insulating cement ASTM C 449.

2.1.6 Fibrous Glass Cloth and Glass Tape

Fibrous glass cloth and glass tape shall have flame spread and smoke developed ratings of no greater than 25/50 when measured in accordance with ASTM E 84. Fibrous glass cloth and tape; 20 x 20 maximum size mesh. Tape shall be 100 mm wide rolls. Class 3 tape shall be 0.15 kg per square meter.

2.1.7 Staples

Outward clinching type ASTM A 167, Type 304 or 316 stainless steel.

2.1.8 Jackets

ASTM C 921, Type I, maximum moisture vapor transmission 0.02 perms, minimum puncture resistance 50 Beach units on all surfaces except concealed ductwork, where a minimum puncture resistance of 25 Beach units is acceptable. Minimum tensile strength, 6.1 N/mm (35 pounds/inch) width. ASTM C 921, Type II, minimum puncture resistance 25 Beach units, tensile strength minimum 3.5 N/mm (20 pound/inch) width. Jackets used on insulation exposed in finished areas shall have white finish suitable for

painting without sizing.

2.1.8.1 White Vapor Retarder ASJ (All Service Jacket)

For use on hot/cold pipes, ducts, or equipment. Vapor retarder jackets used on insulation exposed in finished areas shall have white finish suitable for painting without sizing.

2.1.8.2 NOT USED

2.1.8.3 Polyvinyl Chloride (PVC) Jackets

Polyvinyl chloride (PVC) jacket and fitting covers shall have high impact strength, UV resistant rating or treatment and moderate chemical resistance with minimum thickness 0.7620 mm (0.030 inch). Insulation under PVC jacket shall meet jacket manufacturer's written recommendations.

2.1.9 Vapor Retarder Coating

The vapor retarder coating shall be fire and water resistant and appropriately selected for either outdoor or indoor service. Color shall be white. The water vapor permeance of the compound shall not exceed 0.05 perm and shall be determined according to procedure B of ASTM E 96 utilizing apparatus described in ASTM E 96. The coating shall be a nonflammable, fire resistant type. The flash point of the compound shall not be less than 26.7 degrees C and shall be determined in accordance with ASTM D 3278. All other application and service properties shall be in accordance with ASTM C 647.

2.2 PIPE INSULATION MATERIALS

Pipe insulation materials shall be as follows:

2.2.1 Aboveground Cold Pipeline

Insulation for minus 34 degrees C to plus 16 degrees C shall be as follows:

2.2.1.1 Cellular Glass

ASTM C 552, Type II, and Type III.

2.2.1.2 Flexible Cellular Insulation

ASTM C 534, Type I or II. Type II shall have vapor retarder skin on both sides of the insulation.

2.2.2 Aboveground Hot Pipeline

For aboveground hot pipeline above 16 degrees C insulation the following requirements shall be met.

2.2.2.1 Mineral Fiber

ASTM C 547, Class 1 or Class 2 as required for the operating temperature range.

2.2.2.2 Calcium Silicate

ASTM C 533, Type I indoor only, or outdoors above 121 degrees C (250

degrees F) pipe temperature.

2.2.2.3 Cellular Glass

ASTM C 552, Type II and Type III.

2.2.2.4 Flexible Cellular Insulation

ASTM C 534, Type I or II to 93 degrees C (200 degrees F) service.

2.3 DUCT INSULATION MATERIALS

Duct insulation materials shall be as follows:

2.3.1 Rigid Mineral Fiber

ASTM C 612, Class 1.

2.3.2 Flexible Mineral Fiber

ASTM C 553, Type I, Class B-2.

2.3.3 Cellular Glass

ASTM C 552, Type I.

2.3.4 Phenolic Foam

ASTM C 1126 Type II. A maximum allowable leachable chloride content shall comply with ASTM C 795 when tested in accordance with ASTM C 871.

2.3.5 Flexible Cellular

ASTM C 534 Type II.

PART 3 EXECUTION

3.1 APPLICATION - GENERAL

3.1.1 Installation

Except as otherwise specified, material shall be installed in accordance with the manufacturer's written instructions. Insulation materials shall not be applied until tests specified in other sections of this specification are completed. Material such as rust, scale, dirt and moisture shall be removed from surfaces to receive insulation. Insulation shall be kept clean and dry. Insulation shall not be removed from its shipping containers until the day it is ready to use and shall be returned to like containers or equally protected from dirt and moisture at the end of each workday. Insulation that becomes dirty shall be thoroughly cleaned prior to use. If insulation becomes wet or if aforementioned cleaning does not restore the surfaces to like new condition, the insulation will be rejected, and shall be immediately removed from the jobsite. Joints shall be staggered on multi layer insulation. Mineral fiber thermal insulating cement shall be mixed with demineralized water when used on stainless steel surfaces. Insulation, jacketing and accessories shall be installed in accordance with MICA-01 standard plates except where modified herein or on the drawings.

3.1.2 Fire stopping

Where pipes and ducts pass through fire walls, fire partitions, above grade floors, and fire rated chase walls, the penetration shall be sealed with Fire stopping materials as specified in Section 07840 FIRE STOPPING.

3.1.3 Painting and Finishing

Painting shall be as specified in Section 09900 PAINTING, GENERAL.

3.1.4 Flexible Cellular Insulation

Flexible cellular insulation shall be installed with seams and joints sealed with a contact adhesive. Flexible cellular insulation shall not be used on surfaces greater than 93 degrees C (200 degrees F). Seams shall be staggered when applying multiple layers of insulation. Insulation exposed to weather and not shown to have jacketing shall be protected with two coats of UV resistant finish as recommended by the manufacturer after the adhesive is dry.

3.1.5 Welding

No welding shall be done on piping, duct or equipment without written approval of the Contracting Officer. The capacitor discharge welding process may be used for securing metal fasteners to duct.

3.1.6 Pipes/Ducts/Equipment which Require Insulation

Insulation is required, unless stated otherwise, on all pipes, ducts, or equipment, which operate at or below 15.6 C and at or above 26.7 C.

3.2 PIPE INSULATION INSTALLATION

3.2.1 Pipe Insulation

3.2.1.1 General

Pipe insulation shall be installed on aboveground hot and cold pipeline systems as specified below to form a continuous thermal retarder, including straight runs, fittings and appurtenances unless specified otherwise. Installation shall be with full length units of insulation and using a single cut piece to complete a run. Cut pieces or scraps abutting each other shall not be used. Pipe insulation shall be omitted on the following:

a. Pipe used solely for fire protection.

b. Chromium plated pipe to plumbing fixtures. However, fixtures for use by the physically handicapped shall have the hot water supply and drain, including the trap, insulated where exposed.

c. Sanitary drain lines.

d. Unions in pipe above 16 degrees C.

e. Strainers in pipe above 16 degrees C.

f. Check valves in pipe above 16 degrees C.

g. Air chambers.

3.2.1.2 Pipes Passing Through Sleeves

a. Pipe insulation shall be continuous through the sleeve.

3.2.1.3 Pipes Passing Through Hangers

a. Insulation, whether hot or cold application, shall be continuous through hangers. All horizontal pipes 50 mm (2 inches) and smaller shall be supported on hangers with the addition of a Type 40 protection shield to protect the insulation in accordance with MSS SP-69. Whenever insulation shows signs of being compressed, or when the insulation or jacket shows visible signs of distortion at or near the support shield, insulation inserts as specified below for piping larger than 50 mm (2 inches) shall be installed.

b. Horizontal pipes larger than 50 mm (2 inches) at 16 degrees C (60 degrees F) and above shall be supported on hangers in accordance with MSS SP-69, and Section 15400 PLUMBING, GENERAL PURPOSE.

c. Horizontal pipes larger than 50 mm (2 inches) below 16 degrees C shall be supported on hangers with the addition of a Type 40 protection shield in accordance with MSS SP-69. An insulation insert of cellular glass or calcium silicate shall be installed above each shield. The insert shall cover not less than the bottom 180 degree arc of the pipe. Inserts shall be the same thickness as the insulation, and shall extend 50 mm on each end beyond the protection shield. When insulation inserts are required per the above, and the insulation thickness is less than 25 mm (1 inch), wooden or cork dowels or blocks may be installed between the pipe and the shield to prevent the weight of the pipe from crushing the insulation as an option to installing insulation inserts. The insulation jacket shall be continuous over the wooden dowel, wooden block, or insulation insert.

d. Vertical pipes shall be supported with either Type 8 or Type 42 riser clamps with the addition of two Type 40 protection shields in accordance with MSS SP-69 covering the 360 degree arc of the insulation. An insulation insert of cellular glass or calcium silicate shall be installed between each shield and the pipe. The insert shall cover the 360 degree arc of the pipe. Inserts shall be the same thickness as the insulation, and shall extend 50 mm on each end beyond the protection shield. When insulation inserts are required per the above, and the insulation thickness is less than 25 mm (1 inch), wooden or cork dowels or blocks may be installed between the pipe and the shield to prevent the hanger from crushing the insulation as an option instead of installing insulation inserts. The insulation jacket shall be continuous over the wooden dowel, wooden block, or insulation insert. The vertical weight of the pipe shall be supported with hangers located in a horizontal section of the pipe. When the pipe riser is longer than 9 m, the weight of the pipe shall be additionally supported with hangers in the vertical run of the pipe which are directly clamped to the pipe, penetrating the pipe insulation. These hangers shall be insulated and the insulation jacket sealed as indicated herein for anchors in a similar service.

e. Inserts shall be covered with a jacket material of the same appearance and quality as the adjoining pipe insulation jacket,

shall overlap the adjoining pipe jacket 38 mm, and shall be sealed as required for the pipe jacket. The jacket material used to cover inserts in flexible cellular insulation shall conform to ASTM C 921, Type 1, and is allowed to be of a different material than the adjoining insulation material.

3.2.1.4 Pipes Passing Through Walls

a. For hot water pipes supplying lavatories or other similar heated service which requires insulation, the insulation shall be terminated on the backside of the finished wall. The insulation termination shall be protected with two coats of vapor barrier coating with a minimum total thickness of 2.0 mm applied with glass tape embedded between coats (if applicable). The coating shall extend out onto the insulation 51.0 mm and shall seal the end of the insulation. Glass tape seams shall overlap 25 mm. Caulk the annular space between the pipe and wall penetration. Cover the pipe and wall penetration with a properly sized (well fitting) escutcheon plate. The escutcheon plate shall overlap the wall penetration at least 10 mm.

b. For domestic cold water pipes requiring insulation, the insulation must cover the pipe throughout the wall penetration. The insulation shall be protected with two coats of vapor barrier coating with a minimum total thickness of 2.0 mm. The coating shall extend out onto the insulation 51.0 mm and shall seal the end of the insulation. Caulk the annular space between the pipe and wall penetration. Cover the pipe and wall penetration with a properly sized (well fitting) escutcheon plate. The escutcheon plate shall overlap the wall penetration by at least 10 mm.

3.2.1.5 Flexible Cellular Pipe Insulation

Flexible cellular pipe insulation shall be tubular form for pipe sizes 150 mm (6 inches) and less. Type II sheet insulation used on pipes larger than 150 mm (6 inches) shall not be stretched around the pipe. On pipes larger than 300 mm (12 inches), adhere insulation directly to the pipe on the lower 1/3 of the pipe. Seams shall be staggered when applying multiple layers of insulation. Sweat fittings shall be insulated with miter-cut pieces the same size as on adjacent piping. Screwed fittings shall be insulated with sleeved fitting covers fabricated from miter-cut pieces and shall be overlapped and sealed to the adjacent pipe insulation.

3.2.2 Aboveground Cold Pipelines

The following shall be included for aboveground cold pipelines minus 34 degrees C to plus 16 degrees C:

a. Domestic cold and chilled drinking water.

3.2.2.1 Insulation Thickness

Insulation thickness for cold pipelines shall be determined using Table I.

Table I - Cold Piping Insulation Thickness
Pipe Size (mm)

Type of	Runouts up to	25 mm &	32 - 51 mm	64 - 102 mm	127 - 152 mm	203 mm &

Service	Material	51 mm*	less				larger
Cold domestic water, above and below ceilings	CG	38	38	38	38	38	38
	FC	10	10	10	10	10	10
Exposed lavatory drains exposed domestic water piping & drains to areas for handicap personnel	FC	13	13	13	13	19	19
	MF	13	25	25	38	38	38
Refrigerant Suction Piping (1.7 C nominal)	FC	12	25	25	25	25	
	CG	40	40	40	40	40	
	FP	25	25	25	25	25	

*When runouts to terminal units exceed 3.66 m the entire length of runout shall be insulated like the main feed pipe.

LEGEND:

CG - Cellular Glass
FC - Flexible Cellular

3.2.2.2 Jacket for Fibrous, Cellular Glass, and Insulated Pipe

Insulation shall be covered with a factory applied vapor retarder jacket or field applied seal welded PVC jacket.

3.2.2.3 Insulation for Straight Runs (Fibrous, Cellular Glass)

a. Insulation shall be applied to the pipe with joints tightly butted. The ends of fibrous insulation shall be sealed off with vapor retarder coating at intervals not to exceed 4.5 m.

b. Longitudinal laps of the jacket material shall overlap not less than 38 mm. Butt strips 75 mm (3 inches) wide shall be provided for circumferential joints.

c. Laps and butt strips shall be secured with adhesive and stapled on 100 mm centers if not factory self-sealing.

d. Factory self-sealing lap systems may be used when the ambient temperature is between 4 degrees C (40 degrees F) and 50 degrees C (120 degrees F) during installation. The lap system shall be installed in accordance with manufacturer's recommendations. Stapler shall be used only if specifically recommended by the manufacturer. Where gaps occur, the section shall be replaced or the gap repaired by applying adhesive under the lap and then stapling.

e. All Staples, including those used to repair factory self-seal lap systems, shall be coated with a vapor retarder coating. All seams,

except those on factory self-seal systems shall be coated with vapor retarder coating.

f. Breaks and punctures in the jacket material shall be patched by wrapping a strip of jacket material around the pipe and securing it with adhesive, stapling, and coating with vapor retarder coating. The patch shall extend not less than 38 mm past the break.

g. At penetrations such as thermometers, the voids in the insulation shall be filled and sealed with vapor retarder coating.

3.2.2.4 Insulation for Fittings and Accessories

a. Pipe insulation shall have ends thoroughly coated with a vapor retarder coating not less than 150 mm from each flange, union, valve, anchor, or fitting in all directions.

b. Precut, preformed insulation for placement over fittings, flanges, unions, valves, anchors, and mechanical couplings shall be used. Precut, preformed insulation shall exhibit the same properties as the adjoining pipe insulation. Where precut/preformed is unavailable, rigid preformed pipe insulation sections may be segmented into the shape required. Insulation of the same thickness and conductivity as the adjoining pipe insulation shall be used. If nesting size insulation is used, the insulation should be overlapped 50 mm or one pipe diameter. Loose fill mineral fiber or insulating cement shall be used to fill the voids. Elbows insulated using segments shall not have less than 3 segments per elbow.

c. Upon completion of installation of insulation on flanges, unions, valves, anchors, fittings and accessories, terminations and insulation not protected by factory vapor retarder jackets or PVC fitting covers shall be protected with two coats of vapor retarder coating with a minimum total thickness of 2.0 mm, applied with glass tape embedded between coats. Tape seams shall overlap 25 mm. The coating shall extend out onto the adjoining pipe insulation 50 mm.

d. Anchors attached directly to the pipe shall be insulated for a sufficient distance to prevent condensation but not less than 150 mm from the insulation surface.

e. Flexible connections at pumps and other equipment shall be insulated with 15 mm (« inch) flexible cellular insulation, unless otherwise indicated.

f. Insulation shall be marked showing the location of unions, strainers, and check valves.

3.2.2.5 Optional PVC Fitting Covers

At the option of the Contractor, premolded, one or two piece PVC fitting covers may be used in lieu of the vapor retarder and embedded glass tape. Factory premolded insulation segments shall be used under the fitting covers for elbows. Insulation segments shall be the same thickness as adjoining pipe insulation and the insulation shall be protected with one coat of vapor retarder coating under the PVC cover. The covers shall be secured by PVC vapor retarder tape, adhesive, seal-welding or with tacks

made for securing PVC covers. Seams in the cover, and tacks and laps to adjoining pipe insulation jacket, shall be sealed with vapor retarder tape to ensure that the assembly has a continuous vapor seal.

3.2.3 Aboveground Hot Pipelines

For hot pipelines above 16 degrees C the following shall be included:

a. Domestic hot water.

3.2.3.1 Insulation Thickness

Insulation thickness for hot pipelines shall be determined using Table II.

LEGEND:

CG - Cellular Glass
CS - Calcium Silicate
MF - Mineral Fiber
FC - Flexible Cellular

Table II - Hot Piping Insulation Thickness
Pipe Size (mm)

Type of Service (degrees C)	Material	Runouts up to 51 mm	25 mm & less	32 - 51 mm	64 - 102 mm	127 - 152 mm	203 mm & larger
Hot domestic water supply & recirculating system (93.3 C max)	CG	38	38	38	38	38	38
	FC	13	25	25	38	38	38
	MF	13	25	25	38	38	38

*When runouts to terminal units exceed 3.66 m, the entire length of runout shall be insulated like the main feed pipe.

3.2.3.2 Jacket for Insulated Pipe

Insulation shall be covered, in accordance with manufacturer's recommendations, with a factory applied Type II jacket or seal welded PVC.

3.2.3.3 Insulation for Straight Runs

a. Insulation shall be applied to the pipe with joints tightly butted.

b. Longitudinal laps of the jacket material shall overlap not less than 38 mm, and butt strips 75 mm (3 inches) wide shall be provided for circumferential joints.

c. Laps and butt strips shall be secured with adhesive and stapled on 100 mm centers if not factory self-sealing. Adhesive may be omitted where pipe is concealed.

d. Factory self-sealing lap systems may be used when the ambient temperature is between 4 degrees C and 49 degrees C (40 degrees and 120 degrees F) and shall be installed in accordance with

manufacturer's instructions. Laps and butt strips shall be stapled whenever there is nonadhesion of the system. Where gaps occur, the section shall be replaced or the gap repaired by applying adhesive under the lap and then stapling.

e. Breaks and punctures in the jacket material shall be patched by wrapping a strip of jacket material around the pipe and be secured with adhesive and stapled on 100 mm centers if not factory self-sealing. Adhesive may be omitted where pipe is concealed. Patch shall extend not less than 38 mm past the break.

f. Install flexible cellular pipe insulation by slitting tubular sections and applying onto piping or tubing. Alternately, whenever possible, slide unslit sections over the open ends of piping or tubing. All seams and butt joints shall be secured and sealed with adhesive. When using self seal products only the butt joints shall be secured with adhesive. Insulation shall be pushed on the pipe, never pulled. Stretching of insulation may result in open seams and joints. All edges shall be clean cut. Rough or jagged edges of the insulation shall not be permitted. Proper tools such as sharp knives must be used. Type II sheet insulation when used on pipe larger than 150 mm (6 inches) shall not be stretched around the pipe. On pipes larger than 300 mm (12 inches), adhere sheet insulation directly to the pipe on the lower 1/3 of the pipe.

3.2.3.4 Insulation for Fittings and Accessories

a. The run of the line pipe insulation shall have the ends brought up to the item.

b. Insulation of the same thickness and conductivity as the adjoining pipe insulation, either premolded or segmented, shall be placed around the item abutting the adjoining pipe insulation, or if nesting size insulation is used, overlapping 50 mm or one pipe diameter. Loose fill mineral fiber or insulating cement shall be used to fill the voids. Insulation for elbows less than 80 mm (3 inch) size shall be premolded. Insulation for elbows 80 mm (3 inch) size and larger shall be either premolded or segmented. Elbows insulated using segments shall have not less than 3 segments per elbow. Insulation may be wired or taped on until finish is applied.

c. Upon completion of installation of insulation on flanges, unions, valves, anchors, fittings and accessories, terminations and insulation not protected by factory vapor retarder jackets or PVC fitting covers shall be protected with two coats of Class 1 adhesive applied with glass tape embedded between coats. Tape seams shall overlap 25 mm. Adhesive shall extend onto the adjoining insulation not less than 50 mm. The total dry film thickness shall be not less than 2.0 mm.

d. Insulation terminations shall be tapered to unions at a 45-degree angle.

e. At the option of the Contractor, factory premolded one- or two-piece PVC fitting covers may be used in lieu of the adhesive and embedded glass tape. Factory premolded segments or factory or field cut blanket insert insulation segments shall be used under the cover and shall be the same thickness as adjoining pipe

insulation. The covers shall be secured by PVC vapor retarder tape, adhesive, seal-welding or with tacks made for securing PVC covers.

3.3 DUCT INSULATION INSTALLATION

Corner angles shall be installed on external corners of insulation on ductwork in exposed finished spaces before covering with jacket.

3.3.1 Duct Insulation Thickness

Duct insulation thickness shall be in accordance with Table III.

Table III - Minimum Duct Insulation (mm)

Cold Air Ducts	50
Relief Ducts	38
Fresh Air Intake Ducts	38
Warm Air Ducts	50
Relief Ducts	38
Fresh Air Intake Ducts	38

3.3.2 Insulation and Vapor Retarder for Cold Air Duct

Insulation and vapor retarder for cold air duct below 16 degrees C: Ducts and associated equipment shall be insulated to a thickness which is in accordance with Table III. The following shall be insulated:

a. Supply ducts.

b. Return air ducts.

c. Relief ducts.

d. Flexible runouts (field-insulated).

e. Plenums.

f. Ducts exposed to weather.

Insulation for rectangular ducts shall be flexible type where concealed, minimum density 12 kg per cubic meter (3/4 pcf) and rigid type where exposed, minimum density 48 kg per cubic meter (3 pcf). Insulation for round/oval ducts shall be flexible type, minimum density 12 kg per cubic meter (3/4 pcf) with a factory Type I jacket; or, a semi rigid board, minimum density 48 kg per cubic meter (3 pcf), formed or fabricated to a tight fit, edges beveled and joints tightly butted and staggered, with a factory applied Type I all service jacket. Insulation for exposed ducts shall be provided with either a white, paintable, factory-applied Type I jacket or a vapor retarder jacket coating finish as specified. Fibrous and cellular glass insulation on concealed duct shall be provided with a factory-applied Type I vapor retarder jacket. The total dry film thickness shall be approximately 2.0 mm. Duct insulation shall be continuous through sleeves and prepared openings except fire wall penetrations. Duct insulation terminating at fire dampers, shall be continuous over the damper collar and retaining angle of fire dampers, which are exposed to unconditioned air and which may be prone to condensate formation. Duct

insulation and vapor retarder shall cover the collar, neck, and any uninsulated surfaces of diffusers, registers and grills. Vapor retarder materials shall be applied to form a complete unbroken vapor seal over the insulation.

3.3.2.1 Installation on Concealed Duct

a. For rectangular, oval or round ducts, insulation shall be attached by applying Class 2 adhesive around the entire perimeter of the duct in 150 mm wide strips on 300 mm centers.

b. For rectangular and oval ducts, 600 mm (24 inches) and larger insulation shall be additionally secured to bottom of ducts by the use of mechanical fasteners. Fasteners shall be spaced on 450 mm centers and not more than 450 mm from duct corners.

c. For rectangular, oval and round ducts, mechanical fasteners shall be provided on sides of duct risers for all duct sizes. Fasteners shall be spaced on 450 mm centers and not more than 450 mm from duct corners.

d. Insulation shall be impaled on the mechanical fasteners where used and shall be pressed thoroughly into the adhesive. Care shall be taken to ensure vapor retarder jacket joints overlap 50 mm. The insulation shall not be compressed to a thickness less than that specified. Insulation shall be carried over standing seams and trapeze-type duct hangers.

e. Self-locking washers shall be installed where mechanical fasteners are used. The pin shall be trimmed back and bent over.

f. Jacket overlaps shall be secured under the overlap with Class 2 adhesive and stapled on 100 mm centers. Staples and seams shall be coated with a brush coat of vapor retarder coating.

g. Breaks in the jacket material shall be covered with patches of the same material as the vapor retarder. The patches shall extend not less than 50 mm beyond the break or penetration in all directions and shall be secured with Class 2 adhesive and staples. Staples and joints shall be sealed with a brush coat of vapor retarder coating.

h. At jacket penetrations such as hangers thermometers and damper operating rods, voids in the insulation shall be filled and the penetration sealed with a brush coat of vapor retarder coating.

i. Insulation terminations and pin punctures shall be sealed and flashed with a reinforced vapor retarder coating finish. The coating shall overlap the adjoining insulation and uninsulated surface 50 mm. Pin puncture coatings shall extend 50 mm from the puncture in all directions.

j. Where insulation standoff brackets occur, insulation shall be extended under the bracket and the jacket terminated at the bracket.

3.3.2.2 Installation on Exposed Duct Work

a. For rectangular ducts, rigid insulation shall be secured to the duct by mechanical fasteners on all four sides of the duct, spaced

not more than 300 mm apart and not more than 75 mm from the edges of the insulation joints. A minimum of two rows of fasteners shall be provided for each side of duct 300 mm and larger. One row shall be provided for each side of duct less than 300 mm.

b. Duct insulation shall be formed with minimum jacket seams. Each piece of rigid insulation shall be fastened to the duct using mechanical fasteners. When the height of projections is less than the insulation thickness, insulation shall be brought up to standing seams, reinforcing, and other vertical projections and shall not be carried over. Vapor retarder jacket shall be continuous across seams, reinforcing, and projections. When height of projections is greater than the insulation thickness, insulation and jacket shall be carried over.

c. Insulation shall be impaled on the fasteners; self-locking washers shall be installed and the pin trimmed and bent over.

d. Joints in the insulation jacket shall be sealed with a 100 mm wide strip of the same material as the vapor retarder jacket. The strip shall be secured with Class 2 adhesive and stapled. Staples and seams shall be sealed with a brush coat of vapor retarder coating.

e. Breaks and ribs or standing seam penetrations in the jacket material shall be covered with a patch of the same material as the jacket. Patches shall extend not less than 50 mm beyond the break or penetration and shall be secured with Class 2 adhesive and stapled. Staples and joints shall be sealed with a brush coat of vapor retarder coating.

f. At jacket penetrations such as hangers, thermometers, and damper operating rods, the voids in the insulation shall be filled and the penetrations sealed with a brush coat of vapor retarder coating.

g. Insulation terminations and pin punctures shall be sealed and flashed with a reinforced vapor retarder coating finish. The coating shall overlap the adjoining insulation and uninsulated surface 50 mm. Pin puncture coatings shall extend 50 mm from the puncture in all directions.

h. Oval and round ducts, flexible type, shall be insulated with factory Type I jacket insulation with minimum density of 12 kg per cubic meter (3/4 pcf) attached by applying Class 2 adhesive around the entire perimeter of the duct in 150 mm wide stripe on 300 mm centers.

3.3.3 Insulation for Warm Air Duct

For warm air ducts above 16 degrees C, ducts and associated equipment shall be insulated to a thickness which is in accordance with Table III. The following shall be insulated:

a. Supply ducts.

b. Return air ducts.

c. Relief air ducts.

d. Flexible runouts (field insulated).

e. Plenums.

f. Ducts exposed to weather.

Insulation for rectangular ducts shall be flexible type where concealed, minimum density 12 kg per cubic meter (3/4 pcf); and rigid type where exposed, minimum density 48 kg per cubic meter (3 pcf). Insulation on exposed ducts shall be provided with a white, paintable, factory-applied Type II jacket, or finished with Class 1 adhesive finish. Flexible type insulation shall be used for round ducts, minimum density 12 kg per cubic meter (3/4 pcf) with a factory-applied Type II jacket. Insulation on concealed duct shall be provided with a factory-applied Type II jacket. Class 1 adhesive finish where indicated to be used shall be accomplished by applying two coats of Class 1 adhesive with a layer of glass cloth embedded between the coats. The total dry film thickness shall be approximately 2.0 mm). Duct insulation shall be continuous through sleeves and prepared openings. Duct insulation shall terminate at fire dampers and flexible connections.

3.3.3.1 Installation on Concealed Duct

a. For rectangular, oval and round ducts, insulation shall be attached by applying Class 2 adhesive around the entire perimeter of the duct in 150 mm wide strips on 300 mm centers.

b. For rectangular and oval ducts 600 mm and larger, insulation shall be secured to the bottom of ducts by the use of mechanical fasteners. Fasteners shall be spaced on 450 mm centers and not more than 450 mm from duct corner.

c. For rectangular, oval and round ducts, mechanical fasteners shall be provided on sides of duct risers for all duct sizes. Fasteners shall be spaced on 450 mm centers and not more than 450 mm from duct corners.

d. The insulation shall be impaled on the mechanical fasteners where used and shall be pressed thoroughly into the adhesive. The insulation shall not be compressed to a thickness less than that specified. Insulation shall be carried over standing seams and trapeze-type hangers.

e. Self-locking washers shall be installed where mechanical fasteners are used and the pin trimmed and bent over.

f. Insulation jacket shall overlap not less than 50 mm at joints and the lap shall be secured with Class 2 adhesive under the lap and stapled on 100 mm centers.

3.3.3.2 Installation on Exposed Duct

a. For rectangular ducts, the rigid insulation shall be secured to the duct by the use of mechanical fasteners on all four sides of the duct, spaced not more than 300 mm apart and not more than 75 mm from the edges of the insulation joints. A minimum of two rows of fasteners shall be provided for each side of duct 300 mm and larger and a minimum of one row for each side of duct less than 300 mm.

b. Duct insulation with factory-applied jacket shall be formed with

minimum jacket seams, and each piece of rigid insulation shall be fastened to the duct using mechanical fasteners. When the height of projection is less than the insulation thickness, insulation shall be brought up to standing seams, reinforcing, and other vertical projections and shall not be carried over the projection. Jacket shall be continuous across seams, reinforcing, and projections. Where the height of projections is greater than the insulation thickness, insulation and jacket shall be carried over the projection.

c. Insulation shall be impaled on the fasteners; self-locking washers shall be installed and pin excess clipped and bent over.

d. Joints on jacketed insulation shall be sealed with a 100 mm (4 inch) wide strip of the same material as the jacket. The strip shall be secured with Class 2 adhesive and stapled.

e. Breaks and penetrations in the jacket material shall be covered with a patch of the same material as the jacket. Patches shall extend not less than 50 mm beyond the break or penetration and shall be secured with Class 2 adhesive and stapled.

f. Insulation terminations and pin punctures shall be sealed and flashed with a Class 1 adhesive. Two coats of Class 1 adhesive coating shall be applied with glass cloth embedded between coats. The total coating shall have a dry film thickness of approximately 2.0 mm and shall overlap the adjoining insulation and uninsulated surface 50 mm.

g. Oval and round ducts, flexible type, shall be insulated with factory Type I jacket insulation, minimum density of 12 kg per cubic meter (3/4 pcf) attached by applying Class 2 adhesive around the entire perimeter of the duct in 150 mm wide stripe on 300 mm center. Joints shall be sealed with a 100 mm (4 inch) wide strip of the same material as the jacket. The strip shall be secured with Class 2 adhesive and stapled.

3.3.4 Ducts Handling Air for Dual Purpose

For air handling ducts for dual purpose below and above 16 degrees C, ducts shall be insulated as specified for cold air duct.

3.3.5 Insulation for Evaporative Cooling Duct

Evaporative cooling supply duct located in spaces not evaporatively cooled, shall be insulated. Material and installation requirements shall be as specified for duct insulation for warm air duct.

3.3.6 Duct Test Holes

After duct systems have been tested, adjusted, and balanced, breaks in the insulation and jacket shall be repaired in accordance with the applicable section of this specification for the type of duct insulation to be repaired.

3.3.7 Duct Exposed to Weather

3.3.7.1 Installation

Ducts exposed to weather shall be insulated and finished as specified for the applicable service for exposed duct inside the building. After the above is accomplished, the insulation shall then be further finished as detailed in the following subparagraphs.

3.3.7.2 Round Duct

Aluminum jacket with factory applied moisture retarder shall be applied with the joints lapped not less than 75 mm and secured with bands located at circumferential laps and at not more than 300 mm intervals throughout. Horizontal joints shall lap down to shed water and located at 4 or 8 o'clock position. Joints shall be sealed with caulking to prevent moisture penetration. Where jacketing abuts an uninsulated surface, joints shall be sealed with caulking.

3.3.7.3 Fittings

Fittings and other irregular shapes shall be finished as specified for rectangular ducts.

3.3.7.4 Rectangular Ducts

Two coats of weatherproof mastic shall be applied to the entire surface with a layer of glass cloth embedded between coats. Glass cloth overlaps at joints and adjoining surfaces shall be not less than 50 mm. Each coat of weatherproof mastic shall be 2.0 mm (1/16 inch) minimum thickness. The top of the exterior duct work shall be built up with insulation in such a manner as to ensure a positive drain of any rain water which may appear. The minimum pitch of the built up section shall be in accordance with the recommendation of the manufacturer of the vapor retarder/weatherproof mastic. Care should be taken in the construction of the built up section so that no low areas appear; this shall ensure no "pooling" of water on the vapor retarder which leads to premature degradation of the retarder and subsequent deterioration of the insulation.

3.4 EQUIPMENT INSULATION INSTALLATION

3.4.1 NOT USED

3.4.2 NOT USED

3.4.3 NOT USED

3.4.4 NOT USED

3.4.5 Equipment Exposed to Weather

3.4.5.1 Installation

Equipment exposed to weather shall be insulated and finished in accordance with the requirements for ducts exposed to weather in paragraph DUCT INSULATION INSTALLATION.

3.4.5.2 Optional Panels

At the option of the Contractor, prefabricated metal insulation panels may be used in lieu of the insulation and finish previously specified. Thermal performance shall be equal to or better than that specified for field applied insulation. Panels shall be the standard catalog product of a

manufacturer of metal insulation panels. Fastenings, flashing, and support system shall conform to published recommendations of the manufacturer for weatherproof installation that shall prevent moisture from entering the insulation. Panels shall be designed to accommodate thermal expansion and to support a 1112 N (250 pound) walking load without permanent deformation or permanent damage to the insulation. Exterior metal cover sheet shall be aluminum and exposed fastenings shall be stainless steel or aluminum.

-- End of Section --

SECTION 15330

WET PIPE SPRINKLER SYSTEM, FIRE PROTECTION

PART 1 GENERAL

1.1 REFERENCES

The publications listed below form a part of this specification to the extent referenced. The publications are referred to in the text by basic designation only.

AMERICAN SOCIETY FOR TESTING AND MATERIALS (ASTM)

ASTM A 47	(1990) Ferritic Malleable Iron Castings
ASTM A 53	(1995a) Pipe, Steel, Black and Hot-Dipped, Zinc-Coated Welded and Seamless
ASTM A 135	(1993) Electric-Resistance-Welded Steel Pipe
ASTM A 183	(1983; R 1990) Carbon Steel Tract Bolts and Nuts
ASTM A 536	(1984; R 1993) Ductile Iron Castings
ASTM A 795	(1995) Black and Hot-Dipped Zinc-Coated (Galvanized) Welded and Seamless Steel Pipe for Fire Protection Use

AMERICAN SOCIETY OF MECHANICAL ENGINEERS (ASME)

ASME B16.1	(1989) Cast Iron Pipe Flanges and Flanged Fittings
ASME B16.3	(1992) Malleable Iron Threaded Fittings
ASME B16.4	(1992) Cast Iron Threaded Fittings
ASME B16.9	(1993) Factory-Made Wrought Steel Buttwelding Fittings
ASME B16.11	(1991) Forged Fittings, Socket-Welding and Threaded
ASME B16.21	(1992) Nonmetallic Flat Gaskets for Pipe Flanges
ASME B18.2.1	(1981; Supple 1991; R 1992) Square and Hex Bolts and Screws (Inch Series)
ASME B18.2.2	(1987; R 1993) Square and Hex Nuts (Inch Series)

AMERICAN SOCIETY OF SANITARY ENGINEERING (ASSE)

ASSE 1015	(1993) Double Check Backflow Prevention Assembly

AMERICAN WATER WORKS ASSOCIATION (AWWA)

AWWA-10062JU	(1992) Standard Methods for the Examination of Water and Wastewater
AWWA B300	(1992) Hypochlorites
AWWA B301	(1992) Liquid Chlorine
AWWA C104	(1990) Cement-Mortar Lining for Ductile-Iron Pipe and Fittings for Water
AWWA C110	(1993) Ductile-Iron and Gray-Iron Fittings, 3 In. Through 48 In. (75 mm through 1200 mm), for Water and Other Liquids
AWWA C111	(1990) Rubber-Gasket Joints for Ductile-Iron Pressure Pipe and Fittings
AWWA C151	(1991) Ductile-Iron Pipe, Centrifugally Cast, for Water or Other Liquids
AWWA C203	(1991) Coal-Tar Protective Coatings and Linings for Steel Water Pipelines - Enamel and Tape - Hot-Applied
AWWA M20	(1973) Manual: Water Chlorination Principles and Practices

FACTORY MUTUAL ENGINEERING AND RESEARCH (FM)

FM P7825	(1995; Supple I; Supple II; Supple III) Approval Guide

MANUFACTURERS STANDARDIZATION SOCIETY OF THE VALVE AND FITTINGS INDUSTRY (MSS)

MSS SP-71	(1990) Cast Iron Swing Check Valves, Flanges and Threaded Ends

NATIONAL FIRE PROTECTION ASSOCIATION (NFPA)

NFPA 13	(1996) Installation of Sprinkler Systems
NFPA 24	(1995) Installation of Private Fire Service Mains and Their Appurtenances
NFPA 231C	(1995) Rack Storage of Materials
NFPA 1963	(1993) Fire Hose Connections

NATIONAL INSTITUTE FOR CERTIFICATION IN ENGINEERING TECHNOLOGIES (NICET)

NICET 1014	(1995) Program Detail Manual for Certification in the Field of Fire

	Protection Engineering Technology (Field Code 003) Automatic Sprinkler System Layout

UNDERWRITERS LABORATORIES (UL)

UL-01	(1996) Building Materials Directory
UL-04	(1996; Supple) Fire Protection Equipment Directory
UL 668	(1989; Rev Feb 1994) Hose Valves For Fire Protection Service

1.2 GENERAL REQUIREMENTS

Wet pipe sprinkler system shall be provided in all areas of the building. The sprinkler system shall provide fire sprinkler protection for the entire area. Except as modified herein, the system shall be designed and installed in accordance with NFPA 13. Pipe sizes which are not indicated on drawings shall be determined by hydraulic calculation.

1.2.1 Hydraulic Design

The system shall be hydraulically designed to discharge a minimum density of 0.068 L/min per square meter over the hydraulically most demanding 280 square meters of floor area. The minimum pipe size for branch lines in gridded systems shall be 32 mm (1-1/4 inch). Hydraulic calculations shall be in accordance with the Area/Density Method of NFPA 13.

1.2.1.1 Hose Demand

An allowance for exterior hose streams of 19 L/min shall be added to the sprinkler system demand at the point of connection to the existing system.

1.2.1.2 Basis for Calculations

Water supply shall be presumed available at the point of connection to existing. Prior to start of work contractor shall request or perform Hydrant Flow Test for actual design of the system. Hydraulic calculations shall be based upon the Hazen-Williams formula with a "C" value of 120 for steel piping, 150 for copper tubing, 140 for new cement-lined ductile-iron piping, and 100 for existing underground piping.

1.2.2 Sprinkler Spacing

Sprinklers shall be uniformly spaced on branch lines. Maximum spacing per sprinkler shall not exceed limits specified in NFPA 13 for hazard occupancy.

1.3 SUBMITTALS

Government approval is required for submittals with a "GA" designation; submittals having an "FIO" designation are for information only. Submittals related to system configuration, hydraulic calculations, and equipment selection, including manufacturer's catalog data, working drawings, connection drawings, control diagrams and certificates shall be submitted concurrently as a complete package. The package will be reviewed by the U.S. Army Engineer District Fire Protection Engineer. The following shall be submitted in accordance with Section 01330 SUBMITTAL PROCEDURES:

SD-01 Data

Load Calculations for Sizing Sway Bracing

For systems that are required to be protected against damage from earthquakes, load calculations shall be provided for sizing of sway bracing.

Sprinkler System Equipment; GA.

Manufacturer's Catalog Data for each separate piece of equipment proposed for use in the system. Data shall indicate the name of the manufacturer of each item of equipment, with data highlighted to indicate model, size, options, etc. proposed for installation. In addition, a complete equipment list which includes equipment description, model number and quantity shall be provided.

Hydraulic Calculations; GA.

Hydraulic calculations, including a drawing showing hydraulic reference points and pipe segments.

Spare Parts; GA.

Spare parts data shall be included for each different item of material and equipment specified. The data shall include a complete list of parts and supplies, with current unit prices and source of supply, and a list of parts recommended by the manufacturer to be replaced after 1 year and 3 years of service. A list of special tools and test equipment required for maintenance and testing of the products supplied by the Contractor shall be included.

SD-04 Drawings

Sprinkler System Shop Drawings; GA.

Detail drawings conforming to the requirements established for working plans as prescribed in NFPA 13. Drawings shall include plan and elevation views which establish that the equipment will fit the allotted spaces with clearance for installation and maintenance. Each set of drawings shall include the following:

a. Descriptive index of drawings in the submittal with drawings listed in sequence by drawing number. A legend identifying device symbols, nomenclature, and conventions used.

b. Floor plans drawn to a scale not less than 1:100 which clearly show locations of sprinklers, risers, pipe hangers, seismic separation assemblies, sway bracing, inspector's test connections, drains, and other applicable details necessary to clearly describe the proposed arrangement. Each type of fitting used and the locations of bushings, reducing couplings, and welded joints shall be indicated.

c. Actual center-to-center dimensions between sprinklers on branch lines and between branch lines; from end sprinklers to adjacent walls; from walls to branch lines; from sprinkler feed mains, cross-mains and branch lines to finished floor and roof or ceiling. A detail shall show the dimension from the sprinkler and sprinkler deflector to the ceiling in finished areas.

d. Longitudinal and transverse building sections showing typical branch line and cross-main pipe routing as well as elevation of each typical sprinkler above finished floor.

e. Details of each type of riser assembly; pipe hanger; sway bracing for earthquake protection, and restraint of underground water main at point-of-entry into the building, and electrical devices and interconnecting wiring.

As-Built Drawings; GA.

As-built drawings, no later than 14 working days after completion of the Final Tests. The sprinkler system shop drawings shall be updated to reflect as-built conditions after work is completed and shall be on reproducible full-size mylar film.

SD-06 Instructions

Test Procedures; GA.

Proposed test procedures for piping hydrostatic test, testing of alarms, at least 14 days prior to the start of related testing.

SD-07 Schedules

Preliminary Tests; GA.

A schedule of preliminary tests, at least 14 days prior to the proposed start of the tests.

Final Test; GA.

Upon successful completion of tests specified under PRELIMINARY TESTS, written notification shall be given to the Contracting Officer of the date for the final acceptance test. Notification shall be provided at least 14 days prior to the proposed start of the test. Notification shall include a copy of the Contractor's Material & Test Certificates.

SD-08 Statements

Installer Qualifications; GA.

Qualifications of the sprinkler installer.

Submittal Preparer's Qualifications; GA.

The name and documentation of certification of the individual who will prepare the submittals, prior to the submittal of the drawings and hydraulic calculations.

SD-13 Certificates

Contractor's Material & Test Certificates; GA.

Certificates, as specified in NFPA 13, shall be completed and signed by the Contractor's Representative performing required tests for both underground and aboveground piping.

SD-19 Operation and Maintenance Manuals

Sprinkler System; GA

Manuals shall be in loose-leaf binder format and grouped by technical sections consisting of manufacturer's standard brochures, schematics, printed instructions, general operating procedures, and safety precautions. The manuals shall list routine maintenance procedures possible breakdowns, and repairs, and troubleshooting guide. This shall include procedures and instructions pertaining to frequency of preventive maintenance, inspection, adjustment, lubrication and cleaning necessary to minimize corrective maintenance and repair.

1.4 HYDRAULIC CALCULATIONS

Hydraulic calculations shall be as outlined in NFPA 13 except that calculations shall be performed by computer using software specifically designed for fire protection system design. Software which uses k-factors for typical branch lines is not acceptable. Calculations shall be taken back to the water supply source unless water supply data is otherwise indicated. Calculations shall substantiate that the design area indicated is the hydraulically most demanding. Water supply curves and system requirements shall be plotted on semi-logarithmic graph paper so as to present a summary of the complete hydraulic calculation. A summary sheet listing sprinklers in the design area and their respective hydraulic reference points, elevations, actual discharge pressures and actual flows shall be provided. Elevations of hydraulic reference points (nodes) shall be indicated. Documentation shall identify each pipe individually and the nodes connected thereto. The diameter, length, flow, velocity, friction loss, number and type fittings, total friction loss in the pipe, equivalent pipe length and Hazen-Williams coefficient shall be indicated for each pipe. For gridded systems, calculations shall show peaking of demand area friction loss to verify that the hydraulically most demanding area is being used. Also for gridded systems, a flow diagram indicating the quantity and direction of flows shall be included. A drawing showing hydraulic reference points (nodes) and pipe designations used in the calculations shall be included and shall be independent of shop drawings.

1.5 SUBMITTAL PREPARER'S QUALIFICATIONS

The sprinkler system submittals, including as-built drawings, shall be prepared by an individual who is either a registered professional engineer or who is certified as a Level III Technician by National Institute for Certification in Engineering Technologies (NICET) in the Automatic Sprinkler System Layout subfield of Fire Protection Engineering Technology in accordance with NICET 1014.

1.6 INSTALLER QUALIFICATIONS

The installer shall be experienced and regularly engaged in the installation of the type and complexity of system included in this project. A statement prior to submittal of any other data or drawings, that the proposed sprinkler system installer is regularly engaged in the installation of the type and complexity of system included in this project shall be provided. In addition, data identifying the location of at least three systems recently installed by the proposed installer which are comparable to the system specified shall be submitted. Contractor shall certify that each system has performed satisfactorily, in the manner intended, for a period of not less than 6 months.

1.7 REGULATORY REQUIREMENTS

Compliance with referenced NFPA standards is mandatory. This includes advisory provisions listed in the appendices of such standards, as though the word "shall" had been substituted for the word "should" wherever it appears. Applicable material and installation standards referenced in Appendix A of NFPA 13 and NFPA 24 shall be considered mandatory the same as if such referenced standards were specifically listed in this specification. In the event of a conflict between specific provisions of this specification and applicable NFPA standards, this specification shall govern. All requirements that exceed the minimum requirements of NFPA 13 shall be incorporated into the design. Reference to "authority having jurisdiction" shall be interpreted to mean the Contracting Officer.

1.8 DELIVERY AND STORAGE

Equipment placed in storage shall be stored with protection from the weather, humidity and temperature variations, dirt and dust or other contaminants.

PART 2 PRODUCTS

2.1 GENERAL EQUIPMENT REQUIREMENTS

2.1.1 Standard Products

Materials and equipment shall be standard products of a manufacturer regularly engaged in the manufacture of such products and shall essentially duplicate items that have been in satisfactory use for at least 2 years prior to bid opening.

2.1.2 Requirements for Fire Protection Service

Equipment and materials shall have been tested by Underwriters Laboratories, Inc. and listed in UL-04 or approved by Factory Mutual and listed in FM P7825. Where the terms "listed" or "approved" appear in this specification, such shall mean listed in UL-04 or FM P7825.

2.1.3 Nameplates

Major components of equipment shall have the manufacturer's name, address, type or style, model or serial number, and catalog number on a plate permanently affixed to the item of equipment.

2.2 UNDERGROUND PIPING SYSTEMS

2.2.1 Pipe

Piping from a point 150 mm above the floor to [a point 1500 mm outside the building wall shall be ductile iron with a rated working pressure of 1207 kPa (175 psi) conforming to AWWA C151, with cement mortar lining conforming to AWWA C104. Piping more than 1500 mm outside the building walls shall comply with Section 02660 WATER LINES.

2.2.2 Fittings and Gaskets

Fittings shall be ductile iron conforming to AWWA C110. Gaskets shall be suitable in design and size for the pipe with which such gaskets are to be

used. Gaskets for ductile iron pipe joints shall conform to AWWA C111.

2.2.3 Gate Valve and Indicator Posts

Gate valves for underground installation shall be of the inside screw type with counter-clockwise rotation to open. Where indicating type valves are shown or required, indicating valves shall be gate valves with an approved indicator post of a length to permit the top of the post to be located 900 mm above finished grade. Gate valves and indicator posts shall be listed in UL-04 or FM P7825.

2.3 ABOVEGROUND PIPING SYSTEMS

Aboveground piping shall be steel.

2.3.1 Steel Piping System

2.3.1.1 Steel Pipe

Except as modified herein, steel pipe shall be black as permitted by NFPA 13 and shall conform to applicable provisions of ASTM A 795, ASTM A 53, or ASTM A 135. Pipe in which threads or grooves are cut shall be Schedule 40 or shall be listed by Underwriters' Laboratories to have a corrosion resistance ratio (CRR) of 1.0 or greater after threads or grooves are cut. Pipe shall be marked with the name of the manufacturer, kind of pipe, and ASTM designation.

2.3.1.2 Fittings for Non-Grooved Steel Pipe

Fittings shall be cast iron conforming to ASME B16.4, steel conforming to ASME B16.9 or ASME B16.11, or malleable iron conforming to ASME B16.3. Fittings into which sprinklers, drop nipples or riser nipples (sprigs) are screwed shall be threaded type. Plain-end fittings with mechanical couplings, fittings which use steel gripping devices to bite into the pipe and segmented welded fittings shall not be used.

2.3.1.3 Grooved Mechanical Joints and Fittings

Joints and fittings shall be designed for not less than 1200 kPa (175 psi) service and shall be the product of the same manufacturer. Fitting and coupling houses shall be malleable iron conforming to ASTM A 47, Grade 32510; ductile iron conforming to ASTM A 536, Grade 65-45-12. Gasket shall be the flush type that fills the entire cavity between the fitting and the pipe. Nuts and bolts shall be heat-treated steel conforming to ASTM A 183 and shall be cadmium plated or zinc electroplated.

2.3.1.4 Flanges

Flanges shall conform to NFPA 13 and ASME B16.1. Gaskets shall be non-asbestos compressed material in accordance with ASME B16.21, 1.6 mm (1/16 inch) thick, and full face or self-centering flat ring type. Bolts shall be squarehead conforming to ASME B18.2.1 and nuts shall be hexagon type conforming to ASME B18.2.2.

2.3.2 NOT USED

2.3.3 NOT USED

2.3.4 Pipe Hangers

Hangers shall be listed in UL-04 or FM P7825 and of the type suitable for the application, construction, and pipe type and sized involved.

2.3.5 Valves

2.3.5.1 Control Valve and Gate Valve

Manually operated sprinkler control valve and gate valve shall be outside stem and yoke (OS&Y) type and shall be listed in UL-01 or FM P7825.

2.3.5.2 Check Valve

Check valve 50 mm (2 inches) and larger shall be listed in UL-01 or FM P7825. Check valves 100 mm (4 inches) and larger shall be of the swing type with flanged cast iron body and flanged inspection plates, shall have a clear waterway and shall meet the requirements of MSS SP-71, for Type 3 or 4.

2.3.5.3 Hose Valve

Valve shall comply with UL 668 and shall have a minimum rating of 2070 kPa (300 psi). Valve shall be non-rising stem, all bronze, 90 degree angle type, with 65 mm (2-1/2 inch) American National Standard Fire Hose Screw Thread (NH) male outlet in accordance with NFPA 1963. Hose valve shall be provided with 65 mm to 40 mm (2-1/2 inch to 1-1/2 inch) reducer. Hose valves shall be equipped with lugged cap with drip drain, cap gasket and chain. Valve finish shall be polished brass.

2.4 ALARM CHECK VALVE ASSEMBLY

Assembly shall include an alarm check valve, standard trim piping, pressure gauges, bypass, retarding chamber, testing valves, main drain, and other components as required for a fully operational system.

2.5 WATER MOTOR ALARM ASSEMBLY

Assembly shall include a body housing, impeller or pelton wheel, drive shaft, striker assembly, gong, wall plate and related components necessary for complete operation. Minimum 20 mm (3/4 inch) galvanized piping shall be provided between the housing and the alarm check valve. Drain piping from the body housing shall be minimum 25 mm (1 inch) galvanized and shall be arranged to drain to the outside of the building. Piping shall be galvanized both on the inside and outside surfaces.

2.6 ALARM INITIATING AND SUPERVISORY DEVICES

2.6.1 NOT USED

2.6.2 Sprinkler Pressure (Waterflow) Alarm Switch

Pressure switch shall include a metal housing with a neoprene diaphragm, SPDT snap action switches and a 15 mm (1/2 inch) NPT male pipe thread. The switch shall have a maximum service pressure rating of 1207 kPa (175 psi). There shall be two SPDT (Form C) contacts factory adjusted to operate at 28 to 55 kPa. The switch shall be capable of being mounted in any position in the alarm line trim piping of the alarm check valve.

2.6.3 Valve Supervisory (Tamper) Switch

Switch shall be suitable for mounting to the type of control valve to be supervised open. The switch shall be tamper resistant and contain one set of SPDT (Form C) contacts arranged to transfer upon removal of the housing cover or closure of the valve of more than two rotations of the valve stem.

2.7 FIRE DEPARTMENT CONNECTION

Fire department connection shall be flush type with cast brass body, matching wall escutcheon lettered "Auto Spkr" with a polished brass finish. The connection shall have two inlets with individual self-closing clappers, caps with drip drains and chains. Female inlets shall have 65 mm (2-1/2 inch) diameter American National Fire Hose Connection Screw Threads (NH) per NFPA 1963.

2.8 SPRINKLERS

Sprinklers shall be used in accordance with their listed spacing limitations. Temperature classification shall be ordinary. Sprinklers in high heat areas including attic spaces or in close proximity to unit heaters shall have temperature classification in accordance with NFPA 13.

2.8.1 Upright Sprinkler

Upright sprinkler shall be brass and shall have a nominal 12.7 mm (1/2 inch) or 13.5 mm (17/32 inch) orifice.

2.8.2 Pendent Sprinkler

Pendent sprinkler shall be of the fusible strut or glass bulb type, semi-recessed type with nominal 12.7 mm (1/2 inch) orifice. Pendent sprinklers shall have a polished chrome finish.

2.8.3 Sidewall Sprinkler

Sidewall sprinkler shall have a nominal 12.7 mm (1/2 inch) orifice. Sidewall sprinkler shall have a polished chrome finish. Sidewall sprinkler shall be the quick-response type.

2.8.4 NOT USED

2.8.5 NOT USED

2.9 DISINFECTING MATERIALS

2.9.1 Liquid Chlorine

Liquid chlorine shall conform to AWWA B301.

2.9.2 Hypochlorites

Calcium hypochlorite and sodium hypochlorite shall conform to AWWA B300.

2.10 ACCESSORIES

2.10.1 Sprinkler Cabinet

Spare sprinklers shall be provided in accordance with NFPA 13 and shall be packed in a suitable metal or plastic cabinet. Spare sprinklers shall be

representative of, and in proportion to, the number of each type and temperature rating of the sprinklers installed. At least one wrench of each type required shall be provided.

2.10.2 Pendent Sprinkler Escutcheon

Escutcheon shall be one-piece metallic type with a depth of less than 20 mm and suitable for installation on pendent sprinklers. The escutcheon shall have a factory finish that matches the pendent sprinkler heads.

2.10.3 Pipe Escutcheon

Escutcheon shall be polished chromium-plated zinc alloy, or polished chromium-plated copper alloy. Escutcheons shall be either one-piece or split-pattern, held in place by internal spring tension or set screw.

2.10.4 Sprinkler Guard

Guard shall be a steel wire cage designed to encase the sprinkler and protect it from mechanical damage. Guards shall be provided on sprinklers located Mechanical Room and Storage Rooms with ceilings.

2.10.5 Identification Sign

Valve identification sign shall be minimum 150 mm wide x 50 mm high with enamel baked finish on minimum 1.214 mm (18 gauge) steel or 0.6 mm (0.024 inch) aluminum with red letters on a white background or white letters on red background. Wording of sign shall include, but not be limited to "main drain," "auxiliary drain," "inspector's test," "alarm test," "alarm line," and similar wording as required to identify operational components.

2.11 NOT USED

2.12 DOUBLE-CHECK VALVE BACKFLOW PREVENTION ASSEMBLY

Double-check backflow prevention assembly shall comply with ASSE 1015. The assembly shall have a bronze, cast-iron or stainless steel body with flanged ends. The assembly shall include OS&Y shutoff valves on the inlet and outlet, 2-positive-seating check valve for continuous pressure application, and four test cocks. Assemblies shall be rated for working pressure of 1207 kPa (175 psi). The maximum pressure loss shall be 40 kPa at a flow rate equal to the sprinkler water demand, at the location of the assembly.

PART 3 EXECUTION

3.1 INSTALLATION REQUIREMENTS

The installation shall be in accordance with the applicable provisions of NFPA 13, NFPA 24 and publications referenced therein. Installation of in-rack sprinklers shall comply with applicable provisions of NFPA 231C.

3.2 ABOVEGROUND PIPING INSTALLATION

Piping shall be run straight and bear evenly on hangers and supports.

3.2.1 Protection of Piping Against Earthquake Damage

The system piping shall be protected against damage from earthquakes.

Seismic protection of the piping system shall be provided in accordance with NFPA 13 and Appendix A, with the exception that the "Earthquake Zones" map of Appendix A shall not apply to this project. Seismic protection shall include flexible couplings, sway bracing, seismic separation assemblies where piping crosses building seismic separation joints, and other features as required in NFPA 13 for protection of piping against damage from earthquakes.

3.2.2 Piping in Exposed Areas

Exposed piping shall be installed so as not to diminish exit access widths, corridors or equipment access. Exposed horizontal piping, including drain piping, shall be installed to provide maximum headroom.

3.2.3 Piping in Finished Areas

In areas with suspended or dropped ceilings and in areas with concealed spaces above the ceiling, piping shall be concealed above ceilings. Piping shall be inspected, tested and approved before being concealed. Risers and similar vertical runs of piping in finished areas shall be concealed.

3.2.4 Pendent Sprinklers

Drop nipples to pendent sprinklers shall consist of minimum 25 mm (1 inch) pipe with a reducing coupling into which the sprinkler shall be threaded. Hangers shall be provided on arm-overs to drop nipples supplying pendent sprinklers when the arm-over exceeds 300 mm. Where sprinklers are installed below suspended or dropped ceilings, drop nipples shall be cut such that sprinkler ceiling plates or escutcheons are of a uniform depth throughout the finished space. The outlet of the reducing coupling shall not extend more than 25 mm below the underside of the ceiling. On pendent sprinklers installed below suspended or dropped ceilings, the distance from the sprinkler deflector to the underside of the ceiling shall not exceed 100 mm. Recessed pendent sprinklers shall be installed such that the distance from the sprinkler deflector to the underside of the ceiling shall not exceed the manufacturer's listed range and shall be of uniform depth throughout the finished area.

3.2.4.1 Pendent Sprinkler Locations

Pendent sprinklers in suspended ceilings shall be located in the center of ceiling tiles.

3.2.5 Upright Sprinklers

Riser nipples or "sprigs" to upright sprinklers shall contain no fittings between the branch line tee and the reducing coupling at the sprinkler. Riser nipples exceeding 750 mm in length shall be individually supported.

3.2.6 Pipe Joints

Pipe joints shall conform to NFPA 13, except as modified herein. Not more than four threads shall show after joint is made up. Welded joints will be permitted, only if welding operations are performed as required by NFPA 13 at the Contractor's fabrication shop, not at the project construction site. Flanged joints shall be provided where indicated or required by NFPA 13. Grooved pipe and fittings shall be prepared in accordance with the manufacturer's latest published specification according to pipe material, wall thickness and size. Grooved couplings and fittings shall be from the

same manufacturer.

3.2.7 Reducers

Reductions in pipe sizes shall be made with one-piece tapered reducing fittings. The use of grooved-end or rubber-gasketed reducing couplings will not be permitted. When standard fittings of the required size are not manufactured, single bushings of the face type will be permitted. Where used, face bushings shall be installed with the outer face flush with the face of the fitting opening being reduced. Bushings shall not be used in elbow fittings, in more than one outlet of a tee, in more than two outlets of a cross, or where the reduction in size is less than 15 mm (1/2 inch).

3.2.8 Pipe Penetrations

Cutting structural members for passage of pipes or for pipe-hanger fastenings will not be permitted. Pipes that must penetrate concrete or masonry walls or concrete floors shall be core-drilled and provided with pipe sleeves. Each sleeve shall be Schedule 40 galvanized steel, ductile iron or cast iron pipe and shall extend through its respective wall or floor and be cut flush with each wall surface. Sleeves shall provide required clearance between the pipe and the sleeve per NFPA 13. The space between the sleeve and the pipe shall be firmly packed with mineral wool insulation. Where pipes pass through fire walls, fire partitions, or floors, a fire seal shall be placed between the pipe and sleeve in accordance with Section 07270 FIRESTOPPING. In penetrations which are not fire-rated or not a floor penetration, the space between the sleeve and the pipe shall be sealed at both ends with plastic waterproof cement which will dry to a firm but pliable mass or with a mechanically adjustable segmented elastomer seal.

3.2.9 Escutcheons

Escutcheons shall be provided for pipe penetration of ceilings and walls. Escutcheons shall be securely fastened to the pipe at surfaces through which piping passes.

3.2.10 Inspector's Test Connection

Unless otherwise indicated, test connection shall consist of 25 mm (1 inch) pipe connected to the remote branch line; a test valve located approximately 2 meters above the floor; a smooth bore brass outlet equivalent to the smallest orifice sprinkler used in the system; and a painted metal identification sign affixed to the valve with the words "Inspector's Test." The discharge orifice shall be located outside the building wall directed so as not to cause damage to adjacent construction or landscaping during full flow discharge.

3.2.11 Drains

Main drain piping shall be provided to discharge at a safe point outside the building. Auxiliary drains shall be provided as required by NFPA 13 except that drain valves shall be used where drain plugs are otherwise permitted. Where branch lines terminate at low points and form trapped sections, such branch lines shall be manifolded to a common drain line.

3.2.12 Installation of Fire Department Connection

Connection shall be mounted on the exterior wall approximately 900 mm above

finished grade. The piping between the connection and the check valve shall be provided with an automatic drip in accordance with NFPA 13 and arranged to drain to the outside.

3.2.13 Identification Signs

Signs shall be affixed to each control valve, inspector test valve, main drain, auxiliary drain, test valve, and similar valves as appropriate or as required by NFPA 13. Hydraulic design data nameplates shall be permanently affixed to each sprinkler riser as specified in NFPA 13.

3.3 UNDERGROUND PIPING INSTALLATION

The fire protection water main shall be laid, and joints anchored, in accordance with NFPA 24. Minimum depth of cover shall be 900 mm. The supply line shall terminate inside the building with a flanged piece, the bottom of which shall be set not less than 150 mm above the finished floor. A blind flange shall be installed temporarily on top of the flanged piece to prevent the entrance of foreign matter into the supply line. A concrete thrust block shall be provided at the elbow where the pipe turns up toward the floor. In addition, joints shall be anchored in accordance with NFPA 24 using pipe clamps and steel rods from the elbow to the flange above the floor and from the elbow to a pipe clamp in the horizontal run of pipe. Buried steel components shall be provided with a corrosion protective coating in accordance with AWWA C203. Piping more than 1500 mm outside the building walls shall meet the requirements of Section 02660 WATER LINES.

3.4 EARTHWORK

Earthwork shall be performed in accordance with applicable provisions of Section 02221 EXCAVATION, FILLING AND BACKFILLING FOR BUILDINGS.

3.5 ELECTRICAL WORK

Alarm signal wiring connected to the building fire alarm control system shall be in accordance with Section 16721 FIRE DETECTION AND ALARM SYSTEM. Wiring color code shall remain uniform throughout the system.

3.6 STERILIZATION

After system components have been installed and pressure tested, each portion of the completed system shall be sterilized. After pressure tests have been made, the portion to be sterilized shall be thoroughly flushed with water until all entrained dirt and other foreign materials have been removed before introducing chlorinating material. The chlorinating material shall be hypochlorites or liquid chlorine. Water chlorination procedure shall be in accordance with AWWA M20. The chlorinating material shall be fed into the sprinkler piping at a constant rate of 50 parts per million (ppm). A properly adjusted hypochlorite solution injected into the system with a hypochlorinator, or liquid chlorine injected into the system through a solution-fed chlorinator and booster pump, shall be used. Chlorination application shall continue until the entire system is filled. The water shall remain in the system for a minimum of 24 hours. Each valve in the system shall be opened and closed several times to ensure its proper disinfection. Following the 24-hour period, no less than 25 ppm chlorine residual shall remain in the system. The system shall be then flushed with clean water until the residual chlorine is reduced to less than one part per million. Samples of water in properly sterilized containers for

bacterial examination will be taken from several system locations which are approved by the Contracting Officer. Samples shall be tested for total coliform organisms (coliform bacteria, fecal coliform, streptococcal, and other bacteria) in accordance with AWWA-10062JU. The testing method shall be either the multiple-tube fermentation technique or the membrane-filter technique. The sterilization shall be repeated until tests indicate the absence of coliform organisms (zero mean coliform density per 100 milliliters) in the samples for at least 2 full days. The system will not be accepted until satisfactory bacteriological results have been obtained.

3.7 FIELD PAINTING AND FINISHING

Field painting and finishing are specified in Section 09900 PAINTING, GENERAL.

3.8 PRELIMINARY TESTS

The system, including the underground water mains, and the aboveground piping and system components, shall be tested to assure that equipment and components function as intended. The underground and aboveground interior piping systems and attached appurtenances subjected to system working pressure shall be tested in accordance with NFPA 13 and NFPA 24. Upon completion of specified tests, the Contractor shall complete certificates as specified in paragraph SUBMITTALS.

3.8.1 Underground Piping

3.8.1.1 Flushing

Underground piping shall be flushed in accordance with NFPA 24. This includes the requirement to flush the lead-in connection to the fire protection system at a flow rate not less that the calculated maximum water demand rate of the system.

3.8.1.2 Hydrostatic Testing

New underground piping shall be hydrostatically tested in accordance with NFPA 24. The allowable leakage shall be measured at the specified test pressure by pumping from a calibrated container. The amount of leakage at the joints shall not exceed 1.89 liters (2 quarts) per hour per 100 gaskets or joints, regardless of pipe diameter.

3.8.2 Aboveground Piping

3.8.2.1 Hydrostatic Testing

Aboveground piping shall be hydrostatically tested in accordance with NFPA 13 at not less than 1400 kPa or 350 kPa in excess of maximum system operating pressure and shall maintain that pressure without loss for 2 hours. There shall be no drop in gauge pressure or visible leakage when the system is subjected to the hydrostatic test. The test pressure shall be read from a gauge located at the low elevation point of the system or portion being tested.

3.8.3 Testing of Alarm Devices

Each alarm switch shall be tested by flowing water through the inspector's test connection. Each water-operated alarm devices shall be tested to verify proper operation.

3.8.4 Main Drain Flow Test

Following flushing of the underground piping, a main drain test shall be made to verify the adequacy of the water supply. Static and residual pressures shall be recorded on the certificate specified in paragraph SUBMITTALS. In addition, a main drain test shall be conducted each time after a main control valve is shut and opened.

3.9 FINAL ACCEPTANCE TEST

A technician employed by the installing Contractor shall be present for the final tests and shall provide a complete demonstration of the operation of the system. This shall include operation of control valves and flowing of inspector's test connections to verify operation of associated waterflow alarm switches. After operation of control valves has been completed, the main drain test shall be repeated to assure that control valves are in the open position. In addition, the representative shall have available copies of as-built drawings and certificates of tests previously conducted. The installation shall not be considered accepted until identified discrepancies have been corrected and test documentation is properly completed and received.

-- End of Section --

SECTION 15400

PLUMBING, GENERAL PURPOSE

PART 1 GENERAL

1.1 REFERENCES

The publications listed below form a part of this specification to the extent referenced. The publications are referred to in the text by basic designation only.

AIR CONDITIONING AND REFRIGERATION INSTITUTE (ARI)

ARI 700	(1995) Specifications for Fluorocarbon and Other Refrigerants
ARI 1010	(1994) Self-Contained, Mechanically-Refrigerated Drinking-Water Coolers

AMERICAN NATIONAL STANDARDS INSTITUTE (ANSI)

ANSI Z21.10.1	(1993; Z21.10.1a; Z21.10.1b; Z21.10.1c) Gas Water Heaters Vol. I Storage Water Heaters with Input Ratings of 75,000 Btu Per Hour or Less
ANSI Z21.10.3	(1993; Z21.10.3a; Z21.10.3b) Gas Water Heaters Vol. III Storage, With Input Ratings Above 75,000 Btu Per Hour, Circulating and Instantaneous Water Heaters
ANSI Z21.22	(1986; Z21.22a) Relief Valves and Automatic Gas Shutoff Devices for Hot Water Supply Systems

AMERICAN SOCIETY FOR TESTING AND MATERIALS (ASTM)

ASTM A 47	(1990) Ferritic Malleable Iron Castings
ASTM A 53	(1996) Pipe, Steel, Black and Hot-Dipped, Zinc-Coated Welded and Seamless
ASTM A 74	(1996) Cast Iron Soil Pipe and Fittings
ASTM A 105	(1996) Forgings, Carbon Steel, for Piping Components
ASTM A 183	(1983; R 1990) Carbon Steel Track Bolts and Nuts
ASTM A 193	(1996) Alloy-Steel and Stainless Steel Bolting Materials for High-Temperature Service

ASTM A 515	(1992) Pressure Vessel Plates, Carbon Steel, for Intermediate- and Higher-Temperature Service
ASTM A 516	(1990) Pressure Vessel Plates, Carbon Steel, for Moderate- and Lower-Temperature Service
ASTM A 518	(1992) Corrosion-Resistant High-Silicon Iron Castings
ASTM A 536	(1984; R 1993) Ductile Iron Castings
ASTM A 733	(1993) Welded and Seamless Carbon Steel and Austenitic Stainless Steel Pipe Nipples
ASTM A 888	(1994) Hubless Cast Iron Soil Pipe and Fittings for Sanitary and Storm Drain, Waste, and Vent Piping Applications
ASTM B 32	(1995b) Solder Metal
ASTM B 42	(1993) Seamless Copper Pipe, Standard Sizes
ASTM B 43	(1994) Seamless Red Brass Pipe, Standard Sizes
ASTM B 75	(1993) Seamless Copper Tube
ASTM B 88	(1996) Seamless Copper Water Tube
ASTM B 152	(1994) Copper Sheet, Strip, Plate, and Rolled Bar
ASTM B 306	(1996) Copper Drainage Tube (DWV)
ASTM B 370	(1992) Copper Sheet and Strip for Building Construction
ASTM B 584	(1996) Copper Alloy Sand Castings for General Applications
ASTM B 641	(1993) Seamless and Welded Copper Distribution Tube (Type D)
ASTM B 813	(1993) Liquid and Paste Fluxes for Soldering Applications of Copper and Copper Alloy Tube
ASTM B 828	(1992) Making Capillary Joints by Soldering of Copper and Copper-Alloy Tube and Fittings
ASTM C 564	(1995) Rubber Gaskets for Cast Iron Soil Pipe and Fittings
ASTM C 920	(1994) Elastomeric Joint Sealants
ASTM D 638	(1996) Tensile Properties of Plastics

ASTM D 1004	(1994a) Initial Tear Resistance of Plastic Film and Sheeting
ASTM D 1248	(1984; R 1989) Polyethylene Plastics Molding and Extrusion Materials
ASTM D 1785	(1994) Poly(Vinyl Chloride) (PVC) Plastic Pipe, Schedules 40, 80, and 120
ASTM D 2000	(1996) Rubber Products in Automotive Applications
ASTM D 2235	(1993a) Solvent Cement for Acrylonitrile-Butadiene-Styrene (ABS) Plastic Pipe and Fittings
ASTM D 2239	(1994) Polyethylene (PE) Plastic Pipe (SIDR-PR) Based on Controlled Inside Diameter
ASTM D 2241	(1994) Poly(Vinyl Chloride) (PVC) Pressure-Rated Pipe (SDR Series)
ASTM D 2447	(1993) Polyethylene (PE) Plastic Pipe, Schedules 40 and 80, Based on Outside Diameter
ASTM D 2464	(1994) Threaded Poly(Vinyl Chloride) (PVC) Plastic Pipe Fittings, Schedule 80
ASTM D 2466	(1994a) Poly(Vinyl Chloride) (PVC) Plastic Pipe Fittings, Schedule 40
ASTM D 2467	(1994) Socket-Type Poly(Vinyl Chloride) (PVC) Plastic Pipe Fittings, Schedule 80
ASTM D 2564	(1993) Solvent Cements for Poly(Vinyl Chloride) (PVC) Plastic Piping Systems
ASTM D 2665	(1995) Poly(Vinyl Chloride) (PVC) Plastic Drain, Waste, and Vent Pipe and Fittings
ASTM D 2672	(1993; R 1995) Joints for IPS PVC Pipe Using Solvent Cement
ASTM D 2683	(1993) Socket-Type Polyethylene Fittings for Outside Diameter-Controlled Polyethylene Pipe and Tubing
ASTM D 2737	(1993) Polyethylene (PE) Plastic Tubing
ASTM D 2822	(1991) Asphalt Roof Cement
ASTM D 2846	(1995a) Chlorinated Poly(Vinyl Chloride) (CPVC) Plastic Hot- and Cold-Water Distribution Systems
ASTM D 2855	(1993) Making Solvent-Cemented Joints with Poly(Vinyl Chloride) (PVC) Pipe and Fittings

ASTM D 2996	(1995) Filament-Wound "Fiberglass" (Glass-Fiber-Reinforced Thermosetting-Resin) Pipe
ASTM D 3035	(1993) Polyethylene (PE) Plastic Pipe (DR-PR) Based on Controlled Outside Diameter
ASTM D 3122	(1993) Solvent Cements for Styrene-Rubber (SR) Plastic Pipe and Fittings
ASTM D 3138	(1993) Solvent Cements for Transition Joints Between Acrylonitrile-Butadiene-Styrene (ABS) and Poly(Vinyl Chloride) (PVC) Non-Pressure Piping Components
ASTM D 3139	(1989; R 1995) Joints for Plastic Pressure Pipes Using Flexible Elastomeric Seals
ASTM D 3212	(1992) Joints for Drain and Sewer Plastic Pipes Using Flexible Elastomeric Seals
ASTM D 3261	(1993) Butt Heat Fusion Polyethylene (PE) Plastic Fittings for Polyethylene (PE) Plastic Pipe and Tubing
ASTM D 3308	(1991a) PTFE Resin Skived Tape
ASTM D 3311	(1994) Drain, Waste, and Vent (DWV) Plastic Fittings Patterns
ASTM D 4551	(1991) Poly(Vinyl Chloride) (PVC) Plastic Flexible Concealed Water-Containment Membrane
ASTM E 1	(1995) ASTM Thermometers
ASTM E 96	(1995) Water Vapor Transmission of Materials
ASTM F 437	(1993) Threaded Chlorinated Poly(Vinyl Chloride) (CPVC) Plastic Pipe Fittings, Schedule 80
ASTM F 438	(1993) Socket-Type Chlorinated Poly(Vinyl Chloride) (CPVC) Plastic Pipe Fittings, Schedule 40
ASTM F 439	(1993a) Socket-Type Chlorinated Poly(Vinyl Chloride) (CPVC) Plastic Pipe Fittings, Schedule 80
ASTM F 441	(1995) Chlorinated Poly(Vinyl Chloride) (CPVC) Plastic Pipe, Schedules 40 and 80
ASTM F 442	(1994) Chlorinated Poly(Vinyl Chloride) (CPVC) Plastic Pipe (SDR-PR)
ASTM F 477	(1995) Elastomeric Seals (Gaskets) for

	Joining Plastic Pipe
ASTM F 493	(1993a) Solvent Cements for Chlorinated Poly(Vinyl Chloride) (CPVC) Plastic Pipe and Fittings
ASTM F 891	(1993a) Coextruded Poly(Vinyl Chloride) (PVC) Plastic Pipe with a Cellular Core

AMERICAN SOCIETY OF HEATING, REFRIGERATING AND AIR-CONDITIONING ENGINEERS (ASHRAE)

ASHRAE 34	(1992; Addenda a-j) Number Designation and Safety Classification of Refrigerants

AMERICAN SOCIETY OF MECHANICAL ENGINEERS (ASME)

ASME A112.1.2	(1991) Air Gaps in Plumbing Systems
ASME A112.6.1M	(1988) Supports for Off-the-Floor Plumbing Fixtures for Public Use
ASME A112.18.1M	(1996) Plumbing Fixture Fittings
ASME A112.19.1M	(1994) Enameled Cast Iron Plumbing Fixtures
ASME A112.19.2M	(1995; Errata) Vitreous China Plumbing Fixtures
ASME A112.19.3M	(1987; R 1996) Stainless Steel Plumbing fixtures (Designed for Residential Use)
ASME A112.21.1M	(1991) Floor Drains
ASME A112.36.2M	(1991) Cleanouts
ASME B1.20.1	(1983; R 1992) Pipe Threads, General Purpose (Inch)
ASME B16.3	(1992) Malleable Iron Threaded Fittings
ASME B16.4	(1992) Gray Iron Threaded Fittings
ASME B16.5	(1988; Errata Oct 88; B16.5a) Pipe Flanges and Flanged Fittings
ASME B16.12	(1991) Cast Iron Threaded Drainage Fittings
ASME B16.15	(1985; R 1994) Cast Bronze Threaded Fittings Classes 125 and 250
ASME B16.18	(1984; R 1994) Cast Copper Alloy Solder Joint Pressure Fittings
ASME B16.21	(1992) Nonmetallic Flat Gaskets for Pipe Flanges
ASME B16.22	(1995) Wrought Copper and Copper Alloy Solder Joint Pressure Fittings

ASME B16.23	(1992; Errata Jan 1994) Cast Copper Alloy Solder Joint Drainage Fittings - DWV
ASME B16.24	(1991; Errata) Cast Copper Alloy Pipe Flanges, Class 150, 300, 400, 600, 900, 1500 and 2500, and Flanged Fittings, Class 150 and 300
ASME B16.29	(1994) Wrought Copper and Wrought Copper Alloy Solder Joint Drainage Fittings - DWV
ASME B16.34	(1988) Valves - Flanged, Threaded, and Welding End
ASME B16.39	(1986; R 1994) Malleable Iron Threaded Pipe Unions Classes 150, 250, and 300
ASME B31.1	(1995) Power Piping
ASME B31.5	(1992; B31.5a) Refrigeration Piping
ASME B40.1	(1991) Gauges - Pressure Indicating Dial Type - Elastic Element
ASME BPV IX	(1995; Addenda Dec 1995) Boiler and Pressure Vessel Code; Section IX, Welding and Brazing Qualifications
ASME CSD-1	(1995) Controls and Safety Devices for Automatically Fired Boilers

AMERICAN SOCIETY OF SANITARY ENGINEERING (ASSE)

ASSE 1001	(1990) Pipe Applied Atmospheric Type Vacuum Breakers
ASSE 1005	(1993) Water Heater Drain Valves - 3/4-Inch Iron Pipe Size
ASSE 1011	(1995) Hose Connection Vacuum Breakers
ASSE 1012	(1995) Backflow Preventers with Intermediate Atmospheric Vent
ASSE 1013	(1971; Rev thru Oct 1993) Reduced Pressure Principle Backflow Preventers
ASSE 1037	(1986; Rev thru Mar 1990) Pressurized Flushing Devices (Flushometers) for Plumbing Fixtures/F

AMERICAN WATER WORKS ASSOCIATION (AWWA)

AWWA-01	(1995) Standard Methods for the Examination of Water and Wastewater
AWWA B300	(1992) Hypochlorites

AWWA B301	(1992) Liquid Chlorine
AWWA C105	(1993) Polyethylene Encasement for Ductile-Iron Pipe Systems
AWWA C203	(1991) Coal-Tar Protective Coatings and Linings for Steel Water Pipelines - Enamel and Tape - Hot-Applied
AWWA C606	(1987) Grooved and Shouldered Joints
AWWA M20	(1973) Manual: Water Chlorination Principles and Practices

AMERICAN WELDING SOCIETY (AWS)

AWS A5.8	(1992) Filler Metals for Brazing and Braze Welding
AWS B2.2	(1991) Brazing Procedure and Performance Qualification

CAST IRON SOIL PIPE INSTITUTE (CISPI)

CISPI 301	(1995) Hubless Cast Iron Soil Pipe and Fittings for Sanitary and Storm Drain, Waste, and Vent Piping Applications
CISPI HSN-85	(1985) Neoprene Rubber Gaskets for Hub and Spigot Cast Iron Soil Pipe and Fittings

CODE OF FEDERAL REGULATIONS (CFR)

10 CFR 430	Energy Conservation Program for Consumer Products

COMMERCIAL ITEM DESCRIPTIONS (CID)

CID A-A-238	(Rev B) Seat, Water Closet
CID A-A-240	(Basic) Shower Head, Ball Joint

COPPER DEVELOPMENT ASSOCIATION (CDA)

CDA-02	(1995) Copper Tube Handbook

COUNCIL OF AMERICAN BUILDING OFFICIALS (CABO)

CABO A117.1	(1992; Errata Jun 1993) Accessible and Usable Buildings and Facilities

FOUNDATION FOR CROSS-CONNECTION CONTROL AND HYDRAULIC RESEARCH (FCCHR)

FCCCHR-01	(1993) Manual of Cross-Connection Control

MANUFACTURERS STANDARDIZATION SOCIETY OF THE VALVE AND FITTINGS INDUSTRY (MSS)

MSS SP-25	(1993) Standard Marking System for Valves, Fittings, Flanges and Unions
MSS SP-44	(1996) Steel Pipe Line Flanges
MSS SP-58	(1993) Pipe Hangers and Supports - Materials, Design and Manufacture
MSS SP-69	(1996) Pipe Hangers and Supports - Selection and Application
MSS SP-73	(1991) Brazing Joints for Copper and Copper Alloy Pressure Fittings
MSS SP-80	(1997) Bronze Gate, Globe, Angle and Check Valves
MSS SP-83	(1995) Class 3000 Steel Pipe Unions Socket-Welding and Threaded
MSS SP-110	(1996) Ball Valves Threaded, Socket-Welding, Solder Joint, Grooved and Flared Ends

NATIONAL ASSOCIATION OF PLUMBING-HEATING-COOLING CONTRACTORS (NAPHCC)

NAPHCC-01	(1996) National Standard Plumbing Code

NATIONAL ELECTRICAL MANUFACTURERS ASSOCIATION (NEMA)

NEMA 250	(1991) Enclosures for Electrical Equipment (1000 Volts Maximum)

NATIONAL FIRE PROTECTION ASSOCIATION (NFPA)

NFPA 54	(1992) National Fuel Gas Code
NFPA 90A	(1993) Installation of Air Conditioning and Ventilating Systems

NSF INTERNATIONAL (NSF)

NSF Std 14	(1965; Rev Nov 1990) Plastics Piping Components and Related Materials

PLASTIC PIPE AND FITTINGS ASSOCIATION (PPFA)

PPFA-01	(1991) Plastic Pipe in Fire Resistive Construction

PLUMBING AND DRAINAGE INSTITUTE (PDI)

PDI WH 201	(1992) Water Hammer Arresters

SOCIETY OF AUTOMOTIVE ENGINEERS (SAE)

SAE J1508	(1993) Hose Clamps

1.2 STANDARD PRODUCTS

Specified materials and equipment shall be standard products of a manufacturer regularly engaged in the manufacture of such products. Specified equipment shall essentially duplicate equipment that has performed satisfactorily at least two years prior to bid opening.

1.3 PERFORMANCE REQUIREMENTS

1.3.1 Welding

Piping shall be welded in accordance with qualified procedures using performance-qualified welders and welding operators. Procedures and welders shall be qualified in accordance with ASME BPV IX. Welding procedures qualified by others, and welders and welding operators qualified by another employer, may be accepted as permitted by ASME B31.1. The Contracting Officer shall be notified 24 hours in advance of tests, and the tests shall be performed at the work site if practicable. Welders or welding operators shall apply their assigned symbols near each weld they make as a permanent record.

1.4 ELECTRICAL WORK

Motors, motor controllers and motor efficiencies shall conform to the requirements of Section 16415 ELECTRICAL WORK, INTERIOR. Electrical motor-driven equipment specified herein shall be provided complete with motors. Equipment shall be rated at 60 Hz, single phase, ac unless otherwise indicated. Where a motor controller is not provided in a motor-control center on the electrical drawings, a motor controller shall be as indicated. Motor controllers shall be provided complete with properly sized thermal-overload protection in each ungrounded conductor, auxiliary contact, and other equipment, at the specified capacity, and including an allowable service factor.

1.5 SUBMITTALS

Government approval is required for submittals with a "GA" designation; submittals having an "FIO" designation are for information only. The following shall be submitted in accordance with Section 01330 SUBMITTAL PROCEDURES:

SD-01 Data

Welding; GA.

A copy of qualified procedures and a list of names and identification symbols of qualified welders and welding operators.

Vibration-Absorbing Features; GA.

Details of vibration-absorbing features, including arrangement, foundation plan, dimensions and specifications.

SD-04 Drawings

Plumbing System; GA.

Detail drawings consisting of illustrations, schedules, performance charts, instructions, brochures, diagrams, and other information to illustrate the

requirements and operations of each system. Detail drawings for the complete plumbing system including piping layouts and locations of connections; dimensions for roughing-in, foundation, and support points; schematic diagrams and wiring diagrams or connection and interconnection diagrams. Detail drawings shall indicate clearances required for maintenance and operation. Where piping and equipment are to be supported other than as indicated, details shall include loadings and proposed support methods. Mechanical drawing plans, elevations, views, and details, shall be drawn to scale.

Electrical Schematics; GA.

Complete electrical schematic lineless or full line interconnection and connection diagram for each piece of mechanical equipment having more than one automatic or manual electrical control device.

SD-06 Instructions

Plumbing System; GA.

Diagrams, instructions, and other sheets proposed for posting. Manufacturer's recommendations for the installation of bell and spigot and hubless joints for cast iron soil pipe.

SD-09 Reports

Tests, Flushing and Sterilization; GA.

Test reports in booklet form showing all field tests performed to adjust each component and all field tests performed to prove compliance with the specified performance criteria, completion and testing of the installed system. Each test report shall indicate the final position of controls.

Backflow Prevention Assembly Tests; FIO.

Certification of proper operation shall be as accomplished in accordance with state regulations by an individual certified by the state to perform such tests. If no state requirement exists, the Contractor shall have the manufacturer's representative test the device, to ensure the unit is properly installed and performing as intended. The Contractor shall provide written documentation of the tests performed and signed by the individual performing the tests.

SD-13 Certificates

Materials and Equipment; GA.

Where materials or equipment are specified to comply with requirements of AGA, or ASME, proof of such compliance. The label or listing of the specified agency will be acceptable evidence. In lieu of the label or listing, a written certificate may be submitted from an approved, nationally recognized testing organization equipped to perform such services, stating that the items have been tested and conform to the requirements and testing methods of the specified agency. Where equipment is specified to conform to requirements of the ASME Boiler and Pressure Vessel Code, the design, fabrication, and installation shall conform to the code.

Bolts; GA.

Written certification by the bolt manufacturer that the bolts furnished comply with the specified requirements. The certification shall include illustrations of product-required markings, the date of manufacture, and the number of each type of bolt to be furnished based on this certification.

SD-19 Operation and Maintenance Manuals

Plumbing System; GA.

Six copies of the operation manual outlining the step-by-step procedures required for system startup, operation and shutdown. The manual shall include the manufacturer's name, model number, service manual, parts list, and brief description of all equipment and their basic operating features. Six copies of the maintenance manual listing routine maintenance procedures, possible breakdowns and repairs. The manual shall include piping and equipment layout and simplified wiring and control diagrams of the system as installed.

1.6 REGULATORY REQUIREMENTS

1.6.1 Plumbing

Plumbing work shall be in accordance with NAPHCC-01.

1.7 PROJECT/SITE CONDITIONS

The Contractor shall become familiar with details of the work, verify dimensions in the field, and advise the Contracting Officer of any discrepancy before performing any work.

PART 2 PRODUCTS

2.1 MATERIALS

Materials for various services shall be in accordance with TABLES I and II. Pipe schedules shall be selected based on service requirements. Pipe fittings shall be compatible with the applicable pipe materials. Plastic pipe, fittings, and solvent cement shall meet NSF Std 14 and shall be NSF listed for the service intended. Plastic pipe, fittings, and solvent cement used for potable hot and cold water service shall bear the NSF seal "NSF-PW." Polypropylene pipe and fittings shall conform to dimensional requirements of Schedule 40, Iron Pipe size. Pipe threads (except dry seal) shall conform to ASME B1.20.1. Grooved pipe couplings and fittings shall be from the same manufacturer. Material or equipment containing lead shall not be used in any potable water system. Hubless cast-iron soil pipe shall not be installed under concrete floor slabs or in crawl spaces below kitchen floors. Plastic pipe shall not be installed in air plenums. Plastic pipe shall not be installed in a pressure piping system in buildings greater than three stories including any basement levels.

2.1.1 Pipe Joint Materials

Grooved pipe shall not be used under ground. Joints and gasket materials shall conform to the following:

a. Coupling for Cast-Iron Pipe: ASTM A 74, AWWA C606.

b. Coupling for Steel Pipe: AWWA C606.

c. Couplings for Grooved Pipe: Ductile Iron ASTM A 536 (Grade 65-45-12). Copper ASTM A 536.

d. Flange Gaskets: Gaskets shall be made of non-asbestos material in accordance with ASME B16.21. Gaskets shall be flat, 1.6 mm (1/16 inch) thick, and contain Aramid fibers bonded with Styrene Butadiene Rubber (SBR) or Nitro Butadiene Rubber (NBR). Gaskets shall be the full face or self centering flat ring type. Gaskets used for hydrocarbon service shall be bonded with NBR.

e. Neoprene Gaskets for Hub and Cast-Iron Pipe and Fittings: CISPI HSN-85.

f. Brazing Material: Brazing material shall conform to AWS A5.8, BCuP-5.

g. Brazing Flux: Flux shall be in paste or liquid form appropriate for use with brazing material. Flux shall be as follows: lead-free; have a 100 percent flushable residue; contain slightly acidic reagents; contain potassium borides; and contain fluorides. Silver brazing materials shall be in accordance with AWS A5.8.

h. Solder Material: Solder metal shall conform to ASTM B 32 95-5 tin-antimony.

i. Solder Flux: Flux shall be liquid form, non-corrosive, and conform to ASTM B 813, Standard Test 1.

j. PTFE Tape: PTFE Tape, for use with Threaded Metal or Plastic Pipe, ASTM D 3308.

k. Rubber Gaskets for Cast-Iron Soil-Pipe and Fittings: ASTM C 564.

l. Rubber Gaskets for Grooved Pipe: ASTM D 2000, maximum temperature 110 degrees C (230 degrees F).

m. Flexible Elastomeric Seals: ASTM D 3139, ASTM D 3212 or ASTM F 477.

n. Bolts and Nuts for Grooved Pipe Couplings: Heat-treated carbon steel, ASTM A 183.

o. Solvent Cement for Transition Joints between ABS and PVC Nonpressure Piping Components: ASTM D 3138.

p. Plastic Solvent Cement for ABS Plastic Pipe: ASTM D 2235.

q. Plastic Solvent Cement for PVC Plastic Pipe: ASTM D 2564 and ASTM D 2855.

r. Plastic Solvent Cement for CPVC Plastic Pipe: ASTM F 493.

s. Flanged fittings including flanges, bolts, nuts, bolt patterns, etc. shall be in accordance with ASME B16.5 class 150 and shall have the manufacturer's trademark affixed in accordance with MSS SP-25. Flange material shall conform to ASTM A 105. Blind flange material shall conform to ASTM A 516 cold service and ASTM A 515 for hot service. Bolts shall be high strength or intermediate strength with material conforming to ASTM A 193.

t. Plastic Solvent Cement for Styrene Rubber Plastic Pipe: ASTM D 3122.

2.1.2 Miscellaneous Materials

Miscellaneous materials shall conform to the following:

a. Water Hammer Arrester: PDI WH 201.

b. Copper, Sheet and Strip for Building Construction: ASTM B 370.

c. Asphalt Roof Cement: ASTM D 2822.

d. Hose Clamps: SAE J1508.

e. Supports for Off-The-Floor Plumbing Fixtures: ASME A112.6.1M.

f. Metallic Cleanouts: ASME A112.36.2M.

g. Plumbing Fixture Setting Compound: A preformed flexible ring seal molded from hydrocarbon wax material. The seal material shall be nonvolatile nonasphaltic and contain germicide and provide watertight, gastight, odorproof and verminproof properties.

AWWA C203.

h. Hypochlorites: AWWA B300.

i. Liquid Chlorine: AWWA B301.

j. Polyethylene Encasement for Ductile-Iron Piping: AWWA C105.

k. Gauges - Pressure and Vacuum Indicating Dial Type - Elastic Element: ASME B40.1.

l. Thermometers: ASTM E 1.

2.1.3 Pipe Insulation Material

Insulation shall be as specified in Section 15080 THERMAL INSULATION FOR MECHANICAL SYSTEMS.

2.2 PIPE HANGERS, INSERTS, AND SUPPORTS

Pipe hangers, inserts, and supports shall conform to MSS SP-58 and MSS SP-69.

2.3 VALVES

Valves shall be provided on supplies to equipment and fixtures. Valves 65 mm (2-1/2 inches) and smaller shall be bronze with threaded bodies for pipe and solder-type connections for tubing. Valves 80 mm (3 inches) and larger shall have flanged iron bodies and bronze trim. Pressure ratings shall be based upon the application. Grooved end valves may be provided if the manufacturer certifies that the valves meet the performance requirements of applicable MSS standard. Valves shall conform to the following standards:

Description	Standard

Ball Valves Threaded, Socket-Welding, Solder Joint, Grooved and Flared Ends	MSS SP-110
Bronze Gate, Globe, Angle, and Check Valves	MSS SP-80
Steel Valves, Socket Welding and Threaded Ends	ASME B16.34
Water Heater Drain Valves	ASSE 1005
Temperature and Pressure Relief Valves for Hot Water Supply Systems	ANSI Z21.22
Temperature and Pressure Relief Valves for Automatically Fired Hot Water Boilers	ASME CSD-1 Safety Code No., Part CW, Article 5

2.3.1 NOT USED

2.3.2 Wall Faucets

Wall faucets with vacuum-breaker backflow preventer shall be brass with 20 mm (3/4 inch) male inlet threads, hexagon shoulder, and 20 mm (3/4 inch) hose connection. Faucet handle shall be securely attached to stem.

2.3.3 Wall Hydrants

Wall hydrants with vacuum-breaker backflow preventer shall have a nickle-brass or nickel-bronze wall plate or flange with nozzle and detachable key handle. A brass or bronze operating rod shall be provided within a galvanized iron casing of sufficient length to extend through the wall so that the valve is inside the building, and the portion of the hydrant between the outlet and valve is self-draining. A brass or bronze valve with coupling and union elbow having metal-to-metal seat shall be provided. Valve rod and seat washer shall be removable through the face of the hydrant. The hydrant shall have 20 mm (3/4 inch) exposed hose thread on spout and 20 mm (3/4 inch) male pipe thread on inlet.

2.3.4 NOT USED

2.3.5 NOT USED

2.3.6 Relief Valves

Water heaters and hot water storage tanks shall have a combination pressure and temperature (P&T) relief valve. The pressure relief element of a P&T relief valve shall have adequate capacity to prevent excessive pressure buildup in the system when the system is operating at the maximum rate of heat input. The temperature element of a P&T relief valve shall have a relieving capacity which is at least equal to the total input of the heaters when operating at their maximum capacity. Relief valves shall be rated according to ANSI Z21.22. Relief valves for systems where the maximum rate of heat input is less than 59 kW (200,000 Btuh) shall have 20 mm (3/4 inch) minimum inlets, and 20 mm (3/4 inch) outlets. Relief valves for systems where the maximum rate of heat input is greater than 59 kW (200,000 Btuh) shall have 25 mm (1 inch) minimum inlets, and 25 mm (1 inch) outlets. The discharge pipe from the relief valve shall be the size of the valve outlet.

2.4 FIXTURES

Fixtures shall be water conservation type, in accordance with NAPHCC-01. Fixtures for use by the physically handicapped shall be in accordance with CABO A117.1. Vitreous china, nonabsorbent, hard-burned, and vitrified throughout the body shall be provided. Porcelain enameled ware shall have specially selected, clear white, acid-resisting enamel coating evenly applied on surfaces. No fixture will be accepted that shows cracks, crazes, blisters, thin spots, or other flaws. Fixtures shall be equipped with appurtenances such as traps, faucets, stop valves, and drain fittings. Each fixture and piece of equipment requiring connections to the drainage system, except grease interceptors, shall be equipped with a trap. Brass expansion or toggle bolts capped with acorn nuts shall be provided for supports, and polished chromium-plated pipe, valves, and fittings shall be provided where exposed to view. Fixtures with the supply discharge below the rim shall be equipped with backflow preventers. Internal parts of flush and/or flushometer valves, shower mixing valves, shower head face plates, pop-up stoppers of lavatory waste drains, and pop-up stoppers and overflow tees and shoes of bathtub waste drains may contain acetal resin, fluorocarbon, nylon, acrylonitrile-butadiene-styrene (ABS) or other plastic material, if the material has provided satisfactory service under actual commercial or industrial operating conditions for not less than 2 years. Plastic in contact with hot water shall be suitable for 82 degrees C (180 degrees F) water temperature. Plumbing fixtures shall be as indicated in paragraph PLUMBING FIXTURE SCHEDULE.

2.4.1 Lavatories

Vitreous china lavatories shall be provided with two integral molded lugs on the back-underside of the fixture and drilled for bolting to the wall in a manner similar to the hanger plate.

2.5 BACKFLOW PREVENTERS

Backflow preventers shall be approves and listed by the Foundation For Cross-Connection Control & Hydraulic Research. Reduced pressure principle assemblies, double check valve assemblies, atmospheric (nonpressure) type vacuum breakers, and pressure type vacuum breakers shall be tested, approved, and listed in accordance with FCCCHR-01. Backflow preventers with intermediate atmospheric vent shall conform to ASSE 1012. Reduced pressure principle backflow preventers shall conform to ASSE 1013. Hose connection vacuum breakers shall conform to ASSE 1011. Pipe applied atmospheric type vacuum breakers shall conform to ASSE 1001. Air gaps in plumbing systems shall conform to ASME A112.1.2.

2.6 DRAINS

2.6.1 Floor and Shower Drains

Floor and shower drains shall consist of a galvanized body, integral seepage pan, and adjustable perforated or slotted chromium-plated bronze, nickel-bronze, or nickel-brass strainer, consisting of grate and threaded collar. Floor drains shall be cast iron except where metallic waterproofing membrane is installed. Drains shall be of double drainage pattern for embedding in the floor construction. The seepage pan shall have weep holes or channels for drainage to the drainpipe. The strainer shall be adjustable to floor thickness. A clamping device for attaching flashing or waterproofing membrane to the seepage pan without damaging the

flashing or waterproofing membrane shall be provided when required. Drains shall be provided with threaded or caulked connection. In lieu of a caulked joint between the drain outlet and waste pipe, a neoprene rubber gasket conforming to ASTM C 564 may be installed, provided that the drain is specifically designed for the rubber gasket compression type joint. Floor and shower drains shall conform to ASME A112.21.1M.

2.6.1.1 Metallic Shower Pan Drains

Where metallic shower pan membrane is installed, polyethylene drain with corrosion-resistant screws securing the clamping device shall be provided. Polyethylene drains shall have fittings to adapt drain to waste piping. Polyethylene for floor drains shall conform to ASTM D 1248. Drains shall have separate cast-iron "P" trap, circular body, seepage pan, and strainer, unless otherwise indicated.

2.6.2 NOT USED

2.6.3 NOT USED

2.6.4 NOT USED

2.6.5 NOT USED

2.6.6 Sight Drains

Sight drains shall consist of body, integral seepage pan, and adjustable strainer with perforated or slotted grate and funnel extension. The strainer shall have a threaded collar to permit adjustment to floor thickness. Drains shall be of double drainage pattern suitable for embedding in the floor construction. A clamping device for attaching flashing or waterproofing membrane to the seepage pan without damaging the flashing or membrane shall be provided for other than concrete construction. Drains shall have a galvanized heavy cast-iron body and seepage pan and chromium-plated bronze, nickel-bronze, or nickel-brass strainer and funnel combination. Drains shall be provided with threaded or caulked connection and with a separate cast-iron "P" trap, unless otherwise indicated. Drains shall be circular, unless otherwise indicated. The funnel shall be securely mounted over an opening in the center of the strainer. Minimum dimensions shall be as follows:

Area of strainer and collar	0.023 square meters (36 square inches)
Height of funnel	95 mm (3-3/4 inches)
Diameter of lower portion of funnel	50 mm (2 inches)
Diameter of upper portion of funnel	100 mm (4 inches)

2.7 SHOWER PAN

Shower pan may be copper, or nonmetallic material.

2.7.1 Sheet Copper

Sheet copper shall be 4.9 kg per square meter (16 ounce) weight.

2.7.2 Plasticized Polyvinyl Chloride Shower Pan Material

Material shall be sheet form. The material shall be 1.016 mm (0.040 inch) minimum thickness of plasticized polyvinyl chloride or chlorinated polyethylene and shall be in accordance with ASTM D 4551.

2.7.3 Nonplasticized Polyvinyl Chloride (PVC) Shower Pan Material

Material shall consist of a plastic waterproofing membrane in sheet form. The material shall be 1.016 mm (0.040 inch) minimum thickness of nonplasticized PVC and shall have the following minimum properties:

a. ASTM D 638:

Ultimate Tensile Strength:	1.79 MPa (2600 psi)
Ultimate Elongation:	398 percent
100 Percent Modulus:	3.07 MPa (445 psi)

b. ASTM D 1004:

Tear Strength:	53 kilonewtons per meter (300 pounds per inch)

c. ASTM E 96:

Permeance:	0.46 ng per Pa per second per square meter (0.008 perms)

d. Other Properties:

Specific Gravity:	1.29
PVC Solvent:	Weldable
Cold Crack:	minus 47 degrees C (-53 degrees F)
Dimensional stability, 100 degrees C (212 minus 2.5 percent degrees F)	
Hardness, Shore A:	89

2.8 TRAPS

Unless otherwise specified, traps shall be copper-alloy adjustable tube type with slip joint inlet and swivel. Traps shall be without a cleanout. Tubes shall be copper alloy with walls not less than 0.813 mm (0.032 inch) thick within commercial tolerances, except on the outside of bends where the thickness may be reduced slightly in manufacture by usual commercial methods. Inlets shall have rubber washer and copper alloy nuts for slip joints above the discharge level. Swivel joints shall be below the discharge level and shall be of metal-to-metal or metal-to-plastic type as required for the application. Nuts shall have flats for wrench grip. Outlets shall have internal pipe thread, except that when required for the application, the outlets shall have sockets for solder-joint connections. The depth of the water seal shall be not less than 50 mm (2 inches). The interior diameter shall be not more than 3.2 mm (1/8 inch) over or under the nominal size, and interior surfaces shall be reasonably smooth throughout. A copper alloy "P" trap assembly consisting of an adjustable "P" trap and threaded trap wall nipple with cast brass wall flange shall be provided for lavatories. The assembly shall be a standard manufactured unit and may have a rubber-gasketed swivel joint.

2.9 NOT USED

2.10 WATER HEATER

Water heater types and capacities shall be as indicated. Each primary water heater shall have controls adjustable from 32 to 49 degrees C (90 to 120 degrees F). Each gas-fired water heater shall have controls adjustable from 49 to 82 degrees C (120 to 180 degrees F). Hot water systems utilizing recirculation systems shall be tied into building off-hour controls. The thermal efficiencies and stand by heat losses shall conform to TABLE III for each type of water heater specified. The only exception is that the storage capacity need not meet the standard loss requirement if the tank surface area is not insulated to R-12.5 and if a standing light is not used.

2.10.1 NOT USED

2.10.2 NOT USED

2.10.3 Gas-Fired Type

Gas-fired water heaters shall conform to ANSI Z21.10.1 when input is 22 kW (75,000 Btu per hour) or less or ANSI Z21.10.3 for heaters with input greater than 22 kW (75,000 Btu per hour).

2.11 NOT USED

2.12 PUMPS

2.12.1 NOT USED

2.12.2 NOT USED

2.13 COMPRESSED AIR SYSTEM

2.13.1 Air Compressors

Air compressors shall conform to ASME B19.3. Air compressor unit shall be a factory-packaged assembly, including motor controls, switches, wiring, accessories, and motor controllers, in a UL-listed NEMA 250, Type 1 enclosure. Tank-mounted air compressors shall be manufactured to comply with UL listing requirements. Air compressors shall have manufacturer's name and address, together with trade name, and catalog number on a nameplate securely attached to the equipment. Each compressor shall start unloaded and shall have a manual-off-automatic switch that when in the manual position, the compressor loads and unloads to meet the demand and, in the automatic position, a time delay relay shall allow the compressor to operate for an adjustable length of time unloaded, then stop the unit. Guards shall shield exposed moving parts. Each duplex compressor system shall be provided with automatic alternation system. Each compressor motor shall be provided with an across-the-line-type magnetic controller, complete with low-voltage release. An intake air filter and silencer shall be provided with each compressor. Aftercooler and moisture separator shall be installed between compressors and air receiver to remove moisture and oil condensates before the air enters the receiver. Aftercoolers shall be air-cooled. The air shall pass through a sufficient number of tubes to effect cooling. Tubes shall be sized to give maximum heat transfer. Cooling capacity of the aftercooler shall be sized for the total capacity of the compressors. Means shall be provided for draining condensed moisture from the receiver by an automatic float type trap. Capacities of

air compressors and receivers shall be as indicated.

2.13.2 Air Receivers

Receivers shall be design for 1.38 MPa working pressure. Receivers shall factory air tested to 1-1/2 times the working pressure. Receivers shall be equipped with valves and accessories, including pressure gauges and automatic and manual drains. The outside of air receivers may be galvanized or supplied with commercial enamel finish. Receivers shall be designed and constructed in accordance with ASME 16 and shall have the design working pressures specified herein. A display of the ASME seal on the receiver or a certified test report from an approved independent testing laboratory indicating conformance to the ASME Code shall be provided.

2.13.3 Intake Air Supply Filter

Dry type air filter shall be provided having a collection efficiency of 99 percent of particles larger than 10 microns. Filter body and media shall withstand a maximum 862 kPa (125 psi) capacity as indicated.

2.13.4 Pressure Regulators

The air system shall be provided with the necessary regulator valves to maintain the desired pressure for the installed equipment. Regulators shall be designed for a maximum inlet pressure of 862 kPa and a maximum temperature of 93 degrees C. Regulators shall be single-seated, pilot-operated with valve plug, bronze body and trim, and threaded connections. The regulator valve shall include a pressure gauge and shall be provided with an adjustment screw for adjusting the pressure differential from 0 kPa to 862 kPa (0 to 125 psi). Regulator shall be sized as indicated.

PART 3 EXECUTION

3.1 GENERAL INSTALLATION REQUIREMENTS

Hubless cast-iron pipe shall not be installed under concrete floor slabs. Piping located in air plenums shall conform to NFPA 90A requirements. Unprotected plastic pipe shall not be installed in air plenum. Piping located in shafts that constitute air ducts or that enclose air ducts shall be noncombustible in accordance with NFPA 90A. Installation of plastic pipe where in compliance with NFPA may be installed in accordance with PPFA-01. The plumbing system shall be installed complete with necessary fixtures, fittings, traps, valves, and accessories. Water and drainage piping shall be extended 1.5 m outside the building, unless otherwise indicated. A full port ball valve and drain shall be installed on the water service line inside the building approximately 150 mm above the floor from point of entry. Piping shall be connected to the exterior service lines or capped or plugged if the exterior service is not in place. Sewer and water pipes shall be laid in separate trenches, except when otherwise shown. Exterior underground utilities shall be at least 300 mm below the average local frost depth or as indicated on the drawings. If trenches are closed or the pipes are otherwise covered before being connected to the service lines, the location of the end of each plumbing utility shall be marked with a stake or other acceptable means. Valves shall be installed with control no lower than the valve body.

3.1.1 Water Pipe, Fittings, and Connections

3.1.1.1 Utilities

The piping shall be extended to fixtures, outlets, and equipment. The hot-water and cold-water piping system shall be arranged and installed to permit draining. The supply line to each item of equipment or fixture, except faucets, flush valves, or other control valves which are supplied with integral stops, shall be equipped with a shutoff valve to enable isolation of the item for repair and maintenance without interfering with operation of other equipment or fixtures. Supply piping to fixtures, faucets, hydrants, shower heads, and flushing devices shall be anchored to prevent movement.

3.1.1.2 Cutting and Repairing

The work shall be carefully laid out in advance, and unnecessary cutting of construction shall be avoided. Damage to building, piping, wiring, or equipment as a result of cutting shall be repaired by mechanics skilled in the trade involved.

3.1.1.3 Protection of Fixtures, Materials, and Equipment

Pipe openings shall be closed with caps or plugs during installation. Fixtures and equipment shall be tightly covered and protected against dirt, water, chemicals, and mechanical injury. Upon completion of the work, the fixtures, materials, and equipment shall be thoroughly cleaned, adjusted, and operated. Safety guards shall be provided for exposed rotating equipment.

3.1.1.4 Mains, Branches, and Runouts

Piping shall be installed as indicated. Pipe shall be accurately cut and worked into place without springing or forcing. Structural portions of the building shall not be weakened. Aboveground piping shall run parallel with the lines of the building, unless otherwise indicated. Branch pipes from service lines may be taken from top, bottom, or side of main, using crossover fittings required by structural or installation conditions. Supply pipes, valves, and fittings shall be kept a sufficient distance from other work and other services to permit not less than 15 mm between finished covering on the different services. Bare and insulated water lines shall not bear directly against building structural elements so as to transmit sound to the structure or to prevent flexible movement of the lines. Water pipe shall not be buried in or under floors unless specifically indicated or approved. Changes in pipe sizes shall be made with reducing fittings. Use of bushings will not be permitted except for use in situations in which standard factory fabricated components are furnished to accommodate specific excepted installation practice. Change in direction shall be made with fittings, except that bending of pipe 100 mm (4 inches) and smaller will be permitted, provided a pipe bender is used and wide sweep bends are formed. The center-line radius of bends shall be not less than six diameters of the pipe. Bent pipe showing kinks, wrinkles, flattening, or other malformations will not be acceptable.

3.1.1.5 Pipe Drains

Pipe drains indicated shall consist of 20 mm (3/4 inch) hose bibb with renewable seat and full port ball valve ahead of hose bibb. At other low points, 20 mm (3/4 inch) brass plugs or caps shall be provided. Disconnection of the supply piping at the fixture is an acceptable drain.

3.1.1.6 Expansion and Contraction of Piping

Allowance shall be made throughout for expansion and contraction of water pipe. Each hot-water and hot-water circulation riser shall have expansion loops or other provisions such as offsets, changes in direction, etc., where indicated and/or required. Risers shall be securely anchored as required or where indicated to force expansion to loops. Branch connections from risers shall be made with ample swing or offset to avoid undue strain on fittings or short pipe lengths. Horizontal runs of pipe over 15 m in length shall be anchored to the wall or the supporting construction about midway on the run to force expansion, evenly divided, toward the ends. Sufficient flexibility shall be provided on branch runouts from mains and risers to provide for expansion and contraction of piping. Flexibility shall be provided by installing one or more turns in the line so that piping will spring enough to allow for expansion without straining. If mechanical grooved pipe coupling systems are provided, the deviation from design requirements for expansion and contraction may be allowed pending approval of Contracting Officer.

3.1.1.7 Commercial-Type Water Hammer Arresters

Commercial-type water hammer arresters shall be provided on hot- and cold-water supplies and shall be located as generally indicated, with precise location and sizing to be in accordance with PDI WH 201. Water hammer arresters, where concealed, shall be accessible by means of access doors or removable panels. Commercial-type water hammer arresters shall conform to PDI WH 201. Vertical capped pipe columns will not be permitted.

3.1.2 NOT USED

3.1.3 Joints

Installation of pipe and fittings shall be made in accordance with the manufacturer's recommendations. Mitering of joints for elbows and notching of straight runs of pipe for tees will not be permitted. Joints shall be made up with fittings of compatible material and made for the specific purpose intended.

3.1.3.1 Threaded

Threaded joints shall have American Standard taper pipe threads conforming to ASME B1.20.1. Only male pipe threads shall be coated with graphite or with an approved graphite compound, or with an inert filler and oil, or shall have a polytetrafluoroethylene tape applied.

3.1.3.2 Mechanical Couplings

Grooved mechanical joints shall be prepared according to the coupling manufacturer's instructions. Pipe and groove dimensions shall comply with the tolerances specified by the coupling manufacturer. The diameter of grooves made in the field shall be measured using a "go/no-go" gauge, vernier or dial caliper, or narrow-land micrometer. Groove width and dimension of groove from end of the pipe shall be measured and recorded for each change in grooving tool setup to verify compliance with coupling manufacturer's tolerances. Grooved joints shall not be used in concealed locations.

3.1.3.3 Union and Flanged

Unions, flanges and mechanical couplings shall not be concealed in walls, ceilings, or partitions. Unions shall be used on pipe sizes 65 mm (2-1/2 inches) and smaller; flanges shall be used on pipe sizes 80 mm (3 inches) and larger.

3.1.3.4 Cast Iron Soil, Waste and Vent Pipe

Bell and spigot compression and hubless gasketed clamp joints for soil, waste and vent piping shall be installed per the manufacturer's recommendations.

3.1.3.5 Copper Tube and Pipe

The tube or fittings shall not be annealed when making connections. Connections shall be made with a multiflame torch.

a. Brazed. Brazed joints shall be made in conformance with AWS B2.2, MSS SP-73, and CDA-02 with flux and are acceptable for line sizes. Copper to copper joints shall include the use of copper-phosphorus or copper-phosphorus-silver brazing metal without flux. Brazing of dissimilar metals (copper to bronze or brass) shall include the use of flux with either a copper-phosphorus, copper-phosphorus-silver or a silver brazing filler metal.

b. Soldered. Soldered joints shall be made with flux and are only acceptable for lines 50 mm (2 inches) and smaller. Soldered joints shall conform to ASME B31.5 and CDA-02.

c. Copper Tube Extracted Joint. An extracted mechanical joint may be made in copper tube. Joint shall be produced with an appropriate tool by drilling a pilot hole and drawing out the tube surface to form a collar having a minimum height of three times the thickness of the tube wall. To prevent the branch tube from being inserted beyond the depth of the extracted joint, dimpled depth stops shall be provided. Branch tube shall be notched for proper penetration into fitting to ensure a free flow joint. Extracted joints shall be brazed in accordance with NAPHCC-01 using B-Cup series filler metal in accordance with MSS SP-73. Soldered extracted joints will not be permitted.

3.1.3.6 Plastic Pipe

Acrylonitrile-Butadiene-Styrene (ABS) pipe shall have joints made with solvent cement. PVC and CPVC pipe shall have joints made with solvent cement elastomeric, threading, (threading of Schedule 80 Pipe is allowed only where required for disconnection and inspection; threading of Schedule 40 Pipe is not allowed), or mated flanged.

3.1.4 Dissimilar Pipe Materials

Connections between ferrous and non-ferrous copper pipe shall be made with dielectric unions or flange waterways. Connecting joints between plastic and metallic pipe shall be made with transition fitting for the specific purpose.

3.1.5 NOT USED

3.1.6 Pipe Sleeves and Flashing

Pipe sleeves shall be furnished and set in their proper and permanent location.

3.1.6.1 Sleeve Requirements

Pipes passing through concrete or masonry walls or concrete floors or roofs shall be provided with pipe sleeves fitted into place at the time of construction. Sleeves are not required for cast-iron soil pipe passing through concrete slab on grade, except where penetrating a membrane waterproof floor. A modular mechanical type sealing assembly may be installed in lieu of a waterproofing clamping flange and caulking and sealing of annular space between pipe and sleeve. The seals shall consist of interlocking synthetic rubber links shaped to continuously fill the annular space between the pipe and sleeve with corrosion-protected carbon steel bolts, nuts, and pressure plates. The links shall be loosely assembled with bolts to form a continuous rubber belt around the pipe with a pressure plate under each bolt head and each nut. After the seal assembly is properly positioned in the sleeve, tightening of the bolt shall cause the rubber sealing elements to expand and provide a watertight seal between the pipe and the sleeve. Each seal assembly shall be sized as recommended by the manufacturer to fit the pipe and sleeve involved. Sleeves shall not be installed in structural members, except where indicated or approved. Rectangular and square openings shall be as detailed. Each sleeve shall extend through its respective floor, or roof, and shall be cut flush with each surface, except for special circumstances. Pipe sleeves passing through floors in wet areas such as mechanical equipment rooms, lavatories, kitchens, and other plumbing fixture areas shall extend a minimum of 100 mm above the finished floor. Unless otherwise indicated, sleeves shall be of a size to provide a minimum of 6 mm (1/4 inch) clearance between bare pipe and inside of sleeve or between jacket over insulation and sleeves. Sleeves in bearing walls shall be steel pipe or cast-iron pipe. Sleeves for membrane waterproof floors shall be steel pipe, cast-iron pipe, or plastic pipe. Membrane clamping devices shall be provided on pipe sleeves for waterproof floors. Sleeves in nonbearing walls or ceilings may be steel pipe, cast-iron pipe, galvanized sheet metal with lock-type longitudinal seam, or moisture-resistant fiber or plastic. Plastic sleeves shall not be used in nonbearing fire walls, roofs, or floor/ceilings. Except as otherwise specified, the annular space between pipe and sleeve, or between jacket over insulation and sleeve, shall be sealed as indicated with sealants conforming to ASTM C 920 and with a primer, backstop material and surface preparation as specified in Section 07920 JOINT SEALING. Pipes passing through sleeves in concrete floors over crawl spaces shall be sealed as specified above. The annular space between pipe and sleeve or between jacket over insulation and sleeve shall not be sealed for interior walls which are not designated as fire rated. Sleeves through below-grade walls in contact with earth shall be recessed 15 mm from wall surfaces on both sides. Annular space between pipe and sleeve shall be filled with backing material and sealants in the joint between the pipe and concrete wall as specified above. Sealant selected for the earth side of the wall shall be compatible with dampproofing/waterproofing materials that are to be applied over the joint sealant.

3.1.6.2 Flashing Requirements

Pipes passing through roof or floor waterproofing membrane shall be installed through a 4.9 kg per square meter (16 ounce) copper flashing, each within an integral skirt or flange. Flashing shall be suitably

formed, and the skirt or flange shall extend not less than 200 mm from the pipe and shall be set over the roof or floor membrane in a solid coating of bituminous cement. The flashing shall extend up the pipe a minimum of 250 mm. For cleanouts, the flashing shall be turned down into the hub and caulked after placing the ferrule. Pipes passing through pitched roofs shall be flashed, using lead or copper flashing, with an adjustable integral flange of adequate size to extend not less than 200 mm from the pipe in all directions and lapped into the roofing to provide a watertight seal. The annular space between the flashing and the bare pipe or between the flashing and the metal-jacket-covered insulation shall be sealed as indicated. Flashing for dry vents shall be turned down into the pipe to form a waterproof joint. Pipes, up to and including 250 mm (10 inches) in diameter, passing through roof or floor waterproofing membrane may be installed through a cast-iron sleeve with caulking recess, anchor lugs, flashing-clamp device, and pressure ring with brass bolts. Flashing shield shall be fitted into the sleeve clamping device. Pipes passing through wall waterproofing membrane shall be sleeved as described above. A waterproofing clamping flange shall be installed.

3.1.6.3 Waterproofing

Waterproofing at floor-mounted water closets shall be accomplished by forming a flashing guard from soft-tempered sheet copper. The center of the sheet shall be perforated and turned down approximately 40 mm to fit between the outside diameter of the drainpipe and the inside diameter of the cast-iron or steel pipe sleeve. The turned-down portion of the flashing guard shall be embedded in sealant to a depth of approximately 40 mm; then the sealant shall be finished off flush to floor level between the flashing guard and drainpipe. The flashing guard of sheet copper shall extend not less than 200 mm from the drainpipe and shall be lapped between the floor membrane in a solid coating of bituminous cement. If cast-iron water closet floor flanges are used, the space between the pipe sleeve and drainpipe shall be sealed with sealant and the flashing guard shall be upturned approximately 40 mm to fit the outside diameter of the drainpipe and the inside diameter of the water closet floor flange. The upturned portion of the sheet fitted into the floor flange shall be sealed.

3.1.6.4 Optional Counterflashing

Instead of turning the flashing down into a dry vent pipe, or caulking and sealing the annular space between the pipe and flashing or metal-jacket-covered insulation and flashing, counterflashing may be accomplished by utilizing the following:

a. A standard roof coupling for threaded pipe up to 150 mm (6 inches) in diameter.

b. A tack-welded or banded-metal rain shield around the pipe.

3.1.6.5 Pipe Penetrations of Slab on Grade Floors

Where pipes, fixture drains, floor drains, cleanouts or similar items penetrate slab on grade floors, except at penetrations of floors with waterproofing membrane as specified in paragraphs Flashing Requirements and Waterproofing, a groove 6 to 13 mm wide by 6 to 10 mm deep shall be formed around the pipe, fitting or drain. The groove shall be filled with a sealant as specified in Section 07920 JOINT SEALING.

3.1.7 Fire Seal

Where pipes pass through fire walls, fire-partitions, fire-rated pipe chase walls or floors above grade, a fire seal shall be provided as specified in Section 07840 FIRESTOPPING.

3.1.8 Supports

3.1.8.1 General

Hangers used to support piping 50 mm (2 inches) and larger shall be fabricated to permit adequate adjustment after erection while still supporting the load. Pipe guides and anchors shall be installed to keep pipes in accurate alignment, to direct the expansion movement, and to prevent buckling, swaying, and undue strain. Piping subjected to vertical movement when operating temperatures exceed ambient temperatures shall be supported by variable spring hangers and supports or by constant support hangers. In the support of multiple pipe runs on a common base member, a clip or clamp shall be used where each pipe crosses the base support member. Spacing of the base support members shall not exceed the hanger and support spacing required for an individual pipe in the multiple pipe run.

3.1.8.2 Pipe Supports and Structural Bracing, Seismic Requirements

Piping and attached valves shall be supported and braced to resist seismic loads as specified Section 13080. Structural steel required for reinforcement to properly support piping, headers, and equipment, but not shown, shall be provided. Material used for supports shall be as specified in Section 05120 STRUCTURAL STEEL.

3.1.8.3 Pipe Hangers, Inserts, and Supports

Installation of pipe hangers, inserts and supports shall conform to MSS SP-58 and MSS SP-69, except as modified herein.

a. Types 5, 12, and 26 shall not be used.

b. Type 3 shall not be used on insulated pipe.

c. Type 18 inserts shall be secured to concrete forms before concrete is placed. Continuous inserts which allow more adjustment may be used if they otherwise meet the requirements for type 18 inserts.

d. Type 19 and 23 C-clamps shall be torqued per MSS SP-69 and shall have both locknuts and retaining devices furnished by the manufacturer. Field-fabricated C-clamp bodies or retaining devices are not acceptable.

e. Type 20 attachments used on angles and channels shall be furnished with an added malleable-iron heel plate or adapter.

f. Type 24 may be used only on trapeze hanger systems or on fabricated frames.

g. Type 39 saddles shall be used on insulated pipe 100 mm (4 inches) and larger when the temperature of the medium is 15 degrees C or higher. Type 39 saddles shall be welded to the pipe.

h. Type 40 shields shall:

(1) Be used on insulated pipe less than 100 mm (4 inches).

(2) Be used on insulated pipe 100 mm (4 inches) and larger when the temperature of the medium is 15 degrees C or less.

(3) Have a high density insert for pipe 50 mm (2 inches) and larger and for smaller pipe sizes when the insulation is suspected of being visibly compressed, or distorted at or near the shield/insulation interface. High density inserts shall have a density of 128 kg per cubic meter (8 pcf) or greater.

i. Horizontal pipe supports shall be spaced as specified in MSS SP-69 and a support shall be installed not over 300 mm from the pipe fitting joint at each change in direction of the piping. Pipe supports shall be spaced not over 1.5 m apart at valves. Operating temperatures in determining hanger spacing for PVC or CPVC pipe shall be 49 degrees C for PVC and 82 degrees C for CPVC. Horizontal pipe runs shall include allowances for expansion and contraction.

j. Vertical pipe shall be supported at each floor, except at slab-on-grade, at intervals of not more than 4.5 m nor more than 2 m from end of risers, and at vent terminations. Vertical pipe risers shall include allowances for expansion and contraction.

k. Type 40 shields used on insulated pipe shall have high density inserts with a density of 128 kg per cubic meter (8 pcf) or greater.

l. Type 35 guides using steel, reinforced polytetrafluoroethylene (PTFE) or graphite slides shall be provided to allow longitudinal pipe movement. Slide materials shall be suitable for the system operating temperatures, atmospheric conditions, and bearing loads encountered. Lateral restraints shall be provided as needed. Where steel slides do not require provisions for lateral restraint the following may be used:

(1) On pipe 100 mm (4 inches) and larger when the temperature of the medium is 15 degrees C or higher, a Type 39 saddle, welded to the pipe, may freely rest on a steel plate.

(2) On pipe less than 100 mm (4 inches) a Type 40 shield, attached to the pipe or insulation, may freely rest on a steel plate.

(3) On pipe 100 mm (4 inches) and larger carrying medium less that 15 degrees C a Type 40 shield, attached to the pipe or insulation, may freely rest on a steel plate.

m. Pipe hangers on horizontal insulated pipe shall be the size of the outside diameter of the insulation. The insulation shall be continuous through the hanger on all pipe sizes and applications.

n. Where there are high system temperatures and welding to piping is not desirable, the type 35 guide shall include a pipe cradle, welded to the guide structure and strapped securely to the pipe. The pipe shall be separated from the slide material by at least 100 mm or by an amount adequate for the insulation, whichever is

greater.

o. Hangers and supports for plastic pipe shall not compress, distort, cut or abrade the piping, and shall allow free movement of pipe except where otherwise required in the control of expansion/contraction.

3.1.9 Welded Installation

Plumbing pipe weldments shall be as indicated. Changes in direction of piping shall be made with welding fittings only; mitering or notching pipe to form elbows and tees or other similar type construction will not be permitted. Branch connection may be made with either welding tees or forged branch outlet fittings. Branch outlet fittings shall be forged, flared for improvement of flow where attached to the run, and reinforced against external strains. Beveling, alignment, heat treatment, and inspection of weld shall conform to ASME B31.1. Weld defects shall be removed and repairs made to the weld, or the weld joints shall be entirely removed and rewelded. After filler metal has been removed from its original package, it shall be protected or stored so that its characteristics or welding properties are not affected. Electrodes that have been wetted or that have lost any of their coating shall not be used.

3.1.10 Pipe Cleanouts

Pipe cleanouts shall be the same size as the pipe except that cleanout plugs larger than 100 mm (4 inches) will not be required. A cleanout installed in connection with cast-iron soil pipe shall consist of a long-sweep 1/4 bend or one or two 1/8 bends extended to the place shown. An extra-heavy cast-brass or cast-iron ferrule with countersunk cast-brass head screw plug shall be caulked into the hub of the fitting and shall be flush with the floor. Cleanouts in connection with other pipe, where indicated, shall be T-pattern, 90-degree branch drainage fittings with cast-brass screw plugs, except plastic plugs shall be installed in plastic pipe. Plugs shall be the same size as the pipe up to and including 100 mm (4 inches). Cleanout tee branches with screw plug shall be installed at the foot of soil and waste stacks, at the foot of interior downspouts, on each connection to building storm drain where interior downspouts are indicated, and on each building drain outside the building. Cleanout tee branches may be omitted on stacks in single story buildings with slab-on-grade construction or where less than 450 mm of crawl space is provided under the floor. Cleanouts on pipe concealed in partitions shall be provided with chromium plated bronze, nickel bronze, nickel brass or stainless steel flush type access cover plates. Round access covers shall be provided and secured to plugs with securing screw. Square access covers may be provided with matching frames, anchoring lugs and cover screws. Cleanouts in finished walls shall have access covers and frames installed flush with the finished wall. Cleanouts installed in finished floors subject to foot traffic shall be provided with a chrome-plated cast brass, nickel brass, or nickel bronze cover secured to the plug or cover frame and set flush with the finished floor. Heads of fastening screws shall not project above the cover surface. Where cleanouts are provided with adjustable heads, the heads shall be cast iron.

3.2 WATER HEATERS AND HOT WATER STORAGE TANKS

3.2.1 Relief Valves

No valves shall be installed between a relief valve and its water heater or

storage tank. The P&T relief valve shall be installed where the valve actuator comes in contact with the hottest water in the heater. Whenever possible, the relief valve shall be installed directly in a tapping in the tank or heater; otherwise, the P&T valve shall be installed in the hot-water outlet piping. A vacuum relief valve shall be provided on the cold water supply line to the hot-water storage tank or water heater and mounted above and within 150 mm above the top of the tank or water heater.

3.2.2 Installation of Gas-Fired Water Heater

Installation shall conform to NFPA 54 for gas fired. Storage water heaters that are not equipped with integral heat traps and having vertical pipe risers shall be installed with heat traps directly on both the inlet and outlet. Circulating systems need not have heat traps installed. An acceptable heat trap may be a piping arrangement such as elbows connected so that the inlet and outlet piping make vertically upward runs of not less than 600 mm just before turning downward or directly horizontal into the water heater's inlet and outlet fittings. Commercially available heat traps, specifically designed by the manufacturer for the purpose of effectively restricting the natural tendency of hot water to rise through vertical inlet and outlet piping during standby periods may also be approved.

3.2.3 NOT USED

3.2.4 NOT USED

3.2.5 Connections to Water Heaters

Connections of metallic pipe to water heaters shall be made with dielectric unions or flanges.

3.3 FIXTURES AND FIXTURE TRIMMINGS

Angle stops, straight stops, stops integral with the faucets, or concealed type of lock-shield, and loose-key pattern stops for supplies with threaded, sweat or solvent weld inlets shall be furnished and installed with fixtures. Where connections between copper tubing and faucets are made by rubber compression fittings, a beading tool shall be used to mechanically deform the tubing above the compression fitting. Exposed traps and supply pipes for fixtures and equipment shall be connected to the rough piping systems at the wall, unless otherwise specified under the item. Floor and wall escutcheons shall be as specified. Drain lines and hot water lines of fixtures for handicapped personnel shall be insulated and do not require polished chrome finish. Plumbing fixtures and accessories shall be installed within the space shown.

3.3.1 Fixture Connections

Where space limitations prohibit standard fittings in conjunction with the cast-iron floor flange, special short-radius fittings shall be provided. Connections between earthenware fixtures and flanges on soil pipe shall be made gastight and watertight with a closet-setting compound or neoprene gasket and seal. Use of natural rubber gaskets or putty will not be permitted. Fixtures with outlet flanges shall be set the proper distance from floor or wall to make a first-class joint with the closet-setting compound or gasket and fixture used.

3.3.2 Flushometer Valves

Flushometer valves shall be secured to prevent movement by anchoring the long finished top spud connecting tube to wall adjacent to valve with approved metal bracket.

3.3.3 Height of Fixture Rims Above Floor

Lavatories shall be mounted with rim 775 mm above finished floor. Wall-hung drinking fountains and water coolers shall be installed with rim 1020 mm above floor. Wall-hung service sinks shall be mounted with rim 700 mm above the floor. Installation of fixtures for use by the physically handicapped shall be in accordance with CABO A117.1.

3.3.4 Shower Bath Outfits

The area around the water supply piping to the mixing valves and behind the escutcheon plate shall be made watertight by caulking or gasketing.

3.3.5 Fixture Supports

Fixture supports for off-the-floor lavatories, urinals, water closets, and other fixtures of similar size, design, and use, shall be of the chair-carrier type. The carrier shall provide the necessary means of mounting the fixture, with a foot or feet to anchor the assembly to the floor slab. Adjustability shall be provided to locate the fixture at the desired height and in proper relation to the wall. Support plates, in lieu of chair carrier, shall be fastened to the wall structure only where it is not possible to anchor a floor-mounted chair carrier to the floor slab.

3.3.5.1 Support for Solid Masonry Construction

Chair carrier shall be anchored to the floor slab. Where a floor-anchored chair carrier cannot be used, a suitable wall plate shall be embedded in the masonry wall.

3.3.5.2 Support for Cellular-Masonry Wall Construction

Chair carrier shall be anchored to floor slab. Where a floor-anchored chair carrier cannot be used, a suitable wall plate shall be fastened to the cellular wall using through bolts and a back-up plate.

3.3.5.3 Support for Steel Stud Frame Partitions

Chair carrier shall be used. The anchor feet and tubular uprights shall be of the heavy duty design; and feet (bases) shall be steel and welded to a square or rectangular steel tube upright. Wall plates, in lieu of floor-anchored chair carriers, shall be used only if adjoining steel partition studs are suitably reinforced to support a wall plate bolted to these studs.

3.3.5.4 Support for Wood Stud Construction

Where floor is a concrete slab, a floor-anchored chair carrier shall be used. Where entire construction is wood, wood crosspieces shall be installed. Fixture hanger plates, supports, brackets, or mounting lugs shall be fastened with not less than No. 10 wood screws, 6 mm (1/4 inch) thick minimum steel hanger, or toggle bolts with nut. The wood crosspieces shall extend the full width of the fixture and shall be securely supported.

3.3.5.5 Wall-Mounted Water Closet Gaskets

Where wall-mounted water closets are provided, reinforced wax, treated felt, or neoprene gaskets shall be provided. The type of gasket furnished shall be as recommended by the chair-carrier manufacturer.

3.3.6 Backflow Prevention Devices

Plumbing fixtures, equipment, and pipe connections shall not cross connect or interconnect between a potable water supply and any source of nonpotable water. Backflow preventers shall be installed where indicated and in accordance with NAPHCC-01 at all other locations necessary to preclude a cross-connect or interconnect between a potable water supply and any nonpotable substance. In addition backflow preventers shall be installed at all locations where the potable water outlet is below the flood level of the equipment, or where the potable water outlet will be located below the level of the nonpotable substance. Backflow preventers shall be located so that no part of the device will be submerged. Backflow preventers shall be of sufficient size to allow unrestricted flow of water to the equipment, and preclude the backflow of any nonpotable substance into the potable water system. Access shall be provided for maintenance and testing. Each device shall be a standard commercial unit.

3.3.7 Access Panels

Access panels shall be provided for concealed valves and controls, or any item requiring inspection or maintenance. Access panels shall be of sufficient size and located so that the concealed items may be serviced, maintained, or replaced. Access panels shall be as specified in Section 05500 MISCELLANEOUS METAL.

3.3.8 Sight Drains

Sight drains shall be installed so that the indirect waste will terminate 50 mm above the flood rim of the funnel to provide an acceptable air gap.

3.3.9 Traps

Each trap shall be placed as near the fixture as possible, and no fixture shall be double-trapped. Traps installed on cast-iron soil pipe shall be cast iron. Traps installed on steel pipe or copper tubing shall be recess-drainage pattern, or brass-tube type. Traps installed on plastic pipe may be plastic conforming to ASTM D 3311. Traps for acid-resisting waste shall be of the same material as the pipe.

3.3.10 Shower Pans

Before installing shower pan, subfloor shall be free of projections such as nail heads or rough edges of aggregate. Drain shall be a bolt-down, clamping-ring type with weepholes, installed so the lip of the subdrain is flush with subfloor.

3.3.10.1 General

The floor of each individual shower, the shower-area portion of combination shower and drying room, and the entire shower and drying room where the two are not separated by curb or partition, shall be made watertight with a shower pan fabricated in place. The shower pan material shall be cut to size and shape of the area indicated, in one piece to the maximum extent

practicable, allowing a minimum of 150 mm for turnup on walls or partitions, and shall be folded over the curb with an approximate return of 1/4 of curb height. The upstands shall be placed behind any wall or partition finish. Subflooring shall be smooth and clean, with nailheads driven flush with surface, and shall be sloped to drain. Shower pans shall be clamped to drains with the drain clamping ring.

3.3.10.2 Metal Shower Pans

When a shower pan of required size cannot be furnished in one piece, metal pieces shall be joined with a flatlock seam and soldered or burned. The corners shall be folded, not cut, and the corner seam shall be soldered or burned. Pans, including upstands, shall be coated on all surfaces with one brush coat of asphalt. Asphalt shall be applied evenly at not less than 1 liter per square meter. A layer of felt covered with building paper shall be placed between shower pans and wood floors. The joining surfaces of metal pan and drain shall be given a brush coat of asphalt after the pan is connected to the drain.

3.3.10.3 Nonplasticized Chlorinated Polyethylene Shower Pans

Corners of nonplasticized chlorinated polyethylene shower pans shall be folded against the upstand by making a pig-ear fold. Hot-air gun or heat lamp shall be used in making corner folds. Each pig-ear corner fold shall be nailed or stapled 15 mm from the upper edge to hold it in place. Nails shall be galvanized large-head roofing nails. On metal framing or studs, approved duct tape shall be used to secure pig-ear fold and membrane. Where no backing is provided between the studs, the membrane slack shall be taken up by pleating and stapling or nailing to studding 15 mm from upper edge. To adhere the membrane to vertical surfaces, the back of the membrane and the surface to which it will be applied shall be coated with adhesive that becomes dry to the touch in 5 to 10 minutes, after which the membrane shall be pressed into place. Surfaces to be solvent-welded shall be clean. Surfaces to be joined with xylene shall be initially sprayed and vigorously cleaned with a cotton cloth, followed by final coating of xylene and the joining of the surfaces by roller or equivalent means. If ambient or membrane temperatures are below 4 degrees C the membrane and the joint shall be heated prior to application of xylene. Heat may be applied with hot-air gun or heat lamp, taking precautions not to scorch the membrane. Adequate ventilation and wearing of gloves are required when working with xylene. Membrane shall be pressed into position on the drain body, and shall be cut and fit to match so that membrane can be properly clamped and an effective gasket-type seal provided. On wood subflooring, two layers of 0.73 kg per square meter (15 pound) dry felt shall be installed prior to installation of shower pan to ensure a smooth surface for installation.

3.3.10.4 Nonplasticized Polyvinyl Chloride (PVC) Shower Pans

Nonplasticized PVC shall be turned up behind walls or wall surfaces a distance of not less than 150 mm in room areas and 75 mm above curb level in curbed spaces with sufficient material to fold over and fasten to outside face of curb. Corners shall be pig-ear type and folded between pan and studs. Only top 25 mm of upstand shall be nailed to hold in place. Nails shall be galvanized large-head roofing type. Approved duct tape shall be used on metal framing or studs to secure pig-ear fold and membrane. Where no backing is provided between studs, the membrane slack shall be taken up by pleating and stapling or nailing to studding at top inch of upstand. To adhere the membrane to vertical surfaces, the back of the membrane and the surface to which it is to be applied shall be coated

with adhesive that becomes dry to the touch in 5 to 10 minutes, after which the membrane shall be pressed into place. Trim for drain shall be exactly the size of drain opening. Bolt holes shall be pierced to accommodate bolts with a tight fit. Adhesive shall be used between pan and subdrain. Clamping ring shall be bolted firmly. A small amount of gravel or porous materials shall be placed at weepholes so that holes remain clear when setting bed is poured. Membrane shall be solvent welded with PVC solvent cement. Surfaces to be solvent welded shall be clean (free of grease and grime). Sheets shall be laid on a flat surface with an overlap of about 50 mm. Top edge shall be folded back and surface primed with a PVC primer. PVC cement shall be applied and surfaces immediately placed together, while still wet. Joint shall be lightly rolled with a paint roller, then as the joint sets shall be rolled firmly but not so hard as to distort the material. In long lengths, about 600 or 900 mm at a time shall be welded. On wood subflooring, two layers of 0.73 kg per square meter (15 pound) felt shall be installed prior to installation of shower pan to ensure a smooth surface installation.

3.4 NOT USED

3.5 NOT USED

3.6 IDENTIFICATION SYSTEMS

3.6.1 Identification Tags

Identification tags made of brass, engraved laminated plastic, or engraved anodized aluminum, indicating service and valve number shall be installed on valves, except those valves installed on supplies at plumbing fixtures. Tags shall be 35 mm (1-3/8 inch) minimum diameter, and marking shall be stamped or engraved. Indentations shall be black, for reading clarity. Tags shall be attached to valves with No. 12 AWG, copper wire, chrome-plated beaded chain, or plastic straps designed for that purpose.

3.6.2 Color Coding

Color coding for piping identification shall be as specified in Section 09900 PAINTING, GENERAL.

3.7 ESCUTCHEONS

Escutcheons shall be provided at finished surfaces where bare or insulated piping, exposed to view, passes through floors, walls, or ceilings, except in boiler, utility, or equipment rooms. Escutcheons shall be fastened securely to pipe or pipe covering and shall be satin-finish, corrosion-resisting steel, polished chromium-plated zinc alloy, or polished chromium-plated copper alloy. Escutcheons shall be either one-piece or split-pattern, held in place by internal spring tension or setscrew.

3.8 PAINTING

Painting of pipes, hangers, supports, and other iron work, either in concealed spaces or exposed spaces, is specified in Section 09900PAINTING, GENERAL.

3.9 TESTS FLUSHING AND STERILIZATION

3.9.1 Plumbing System

The plumbing system shall be tested in accordance with NAPHCC-01.

3.9.1.1 Test of Backflow Prevention Assemblies

Backflow prevention assembly shall be tested using gauges specifically designed for the testing of backflow prevention assemblies. Gauges shall be tested annually for accuracy in accordance with the University of Southern California's Foundation of Cross Connection Control and Hydraulic Research or the American Water Works Association Manual of Cross Connection (Manual M-14). Report form for each assembly shall include, as a minimum, the following:

Data on Device	Data on Testing Firm
Type of Assembly	Name
Manufacturer	Address
Model Number	Certified Tester
Serial Number	Certified Tester No.
Size	Date of Test
Location	
Test Pressure Readings	Serial Number and Test Data of Gauges

If the unit fails to meet specified requirements, the unit shall be repaired and retested.

3.9.1.2 Shower Pans

After installation of the pan and finished floor, the drain shall be temporarily plugged below the weep holes. The floor area shall be flooded with water to a minimum depth of 25 mm for a period of 24 hours. Any drop in the water level during test, except for evaporation, will be reason for rejection, repair, and retest.

3.9.2 NOT USED

3.9.3 Defective Work

If inspection or test shows defects, such defective work or material shall be replaced or repaired as necessary and inspection and tests shall be repeated. Repairs to piping shall be made with new materials. Caulking of screwed joints or holes will not be permitted.

3.9.4 System Flushing

After tests are completed, potable water piping shall be flushed. In general, sufficient water shall be used to produce a minimum water velocity of 0.762 meters per second (2.5 feet per second) through piping being flushed. Flushing shall be continued until discharge water shows no discoloration. System shall be drained at low points. Strainer screens shall be removed, cleaned, and replaced in line. After flushing and cleaning, systems shall be prepared for service by immediately filling water piping with clean, fresh potable water. Any stoppage, discoloration, or other damage to the finish, furnishings, or parts of the building due to the Contractor's failure to properly clean the piping system shall be repaired by the Contractor. When the work is complete, the hot-water system shall be adjusted for uniform circulation. Flushing devices and automatic control systems shall be adjusted for proper operation.

3.9.5 Operational Test

Upon completion of and prior to acceptance of the installation, the Contractor shall subject the plumbing system to operating tests to demonstrate satisfactory functional and operational efficiency. Such operating tests shall cover a period of not less than 8 hours for each system and shall include the following information in a report with conclusion as to the adequacy of the system:

a. Time, date, and duration of test.

b. Water pressures at the most remote and the highest fixtures.

c. Operation of each fixture and fixture trim.

d. Operation of each valve, hydrant, and faucet.

e. Pump suction and discharge pressures.

f. Temperature of each domestic hot-water supply.

g. Operation of each floor and roof drain by flooding with water.

h. Operation of each vacuum breaker and backflow preventer.

3.9.6 Disinfection

After pressure tests have been made, the entire domestic hot- and cold-water distribution system shall be sterilized. System shall be thoroughly flushed with water of sufficient velocity until all entrained dirt and other foreign material have been removed, before introducing chlorinating material. The chlorinating material shall be hypochlorites or liquid chlorine. Water chlorination procedure shall be in accordance with AWWA M20. The chlorinating material shall be fed into the water piping system at a constant rate at a concentration of at least 50 parts per million (ppm). A properly adjusted hypochlorite solution injected into the main with a hypochlorinator, or liquid chlorine injected into the main through a solution-feed chlorinator and booster pump, shall be used. The chlorine residual shall be checked at intervals to ensure that the proper level is maintained. Chlorine application shall continue until the entire main is filled. The water shall remain in the system for a minimum of 24 hours. Each valve in the system being sterilized shall be opened and closed several times during the contact period to ensure its proper disinfection. Following the 24-hour period, no less than 25 ppm chlorine residual shall remain in the system. Water tanks shall be disinfected by the addition of chlorine directly to the filling water. Following a 6 hour period, no less than 50 ppm chlorine residual shall remain in the tank. The system including the tanks shall then be flushed with clean water until the residual chlorine is reduced to less than one part per million. During the flushing period each valve and faucet shall be opened and closed several times. From several points in the system the Contracting Officer will take samples of water in properly sterilized containers for bacterial examination. The samples of water shall be tested for total coliform organisms (coliform bacteria, fecal coliform, streptococcal, and other bacteria) in accordance with AWWA-01. The testing method used shall be either the multiple-tube fermentation technique or the membrane-filter technique. The sterilizing shall be repeated until tests indicate the absence of coliform organisms (zero mean coliform density per 100 milliliters) in the samples for at least 2 full days. The system will not be accepted until satisfactory bacteriological results have been obtained.

3.10 PLUMBING FIXTURE SCHEDULE

P-2 WATER CLOSET:

Siphon-jet, elongated bowl, top supply spud, ASME A112.19.2M, wall mounted.

Seat - CID A-A-238, Type A, white plastic, elongated, open front.

Flushometer Valve - ASSE 1037, large diaphragm type with non-hold-open feature, backcheck angle control stop, and vacuum breaker. Minimum upper chamber inside diameter of not less than 66.7 mm (2-5/8 inches) at the point where the diaphragm is sealed between the upper and lower chambers. The maximum water use shall be 6 liters per flush.

Flush Valve in Flush Tank - Flush valve seats in tanks for flushing water closets shall be at least 25 mm (1 inch) above the flood level rim of the bowl connected thereto, except in approved water closet and flush tank combinations designed so that when the tank is flushed and the fixture is clogged or partially clogged, the flush valve shall close tightly so that water will not spill continuously over the rim of the bowl or back flow from the bowl to the tank.

P-1 WATER CLOSET HANDICAPPED:

Top rim of bowl shall be 457 mm (18 inches) above the floor; other features are the same as WC-1.

P-3 URINAL:

Wall hanging, with integral trap and extended shields, ASME A112.19.2M siphon jet. Top supply connection, back outlet.

Flushometer Valve - Similar to Flushometer Valve for WC-1. The maximum water use shall be 3.8 liters per flush.

P-4, 5 LAVATORY:

Manufacturer's standard sink depth, vitreous china ASME A112.19.2M, ledge back. Mount for handicapped accessible.

Faucet - Faucets shall be center set. Faucets shall have replaceable seats and washers. Valves and handles shall be copper alloy. Connection between valve and spout for center-set faucet shall be of rigid metal tubing. Flow shall be limited to 1 liter per cycle at a flowing water pressure of 549 kPa if a metering device or fitting is used that limits the period of water discharge such as a foot switch or fixture occupancy sensor. If a metering device is not used, the flow shall be limited to 0.16 liters per second at a flowing pressure of 549 kPa.

Handles - Wrist type. Cast, formed, or drop forged copper alloy.

Drain - Strainer shall be copper alloy or stainless steel. Trap shall be of the off-set type suitable for handicapped use. See paragraph FIXTURES for optional plastic accessories.

P-12 SEMI-CIRCULAR WASH SINK

Precast terrazzo basin composed approximately of 85% stone and 15% binder

with steel reinforcing rods cast into the bowl. 1372 mm (54 in) wide with 230 mm (9 in) deep bowl.

Pedestal - Die-formed legs, braces, scuff bases and panels. Legs 14 gauge galvanized steel. Braces heavy gauge galvanized steel. Scuff bases stainless steel.

Valves and Fittings - Stainless steel spray head with stainless steel support tube and bowl gasket; strainer; spray head supply pipe, mixing valve, volume control valve; stop strainer and check valves. Foot control operation.

P-9 SERVICE SINK:

Enameled cast iron ASME A112.19.1M, copper alloy or stainless steel ASME A112.19.3M corner, floor mounted 711.2 mm (28 inches) square, 171.5 mm (6-3/4 inches) deep.

Faucet and Spout - Cast or wrought copper alloy, with top or bottom brace, with backflow preventer. Faucets shall have replaceable seat and the washer shall rotate onto the seat. Handles shall be lever type. Strainers shall have internal threads.

Drain Assembly - Plug, cup strainer, crossbars, jam nuts, washers, couplings, stopper, etc. shall be copper alloy or stainless steel.

Trap - Cast iron, minimum 7.5 cm diameter.

P-6 SINGLE-COMPARTMENT SINK:

Stainless steel ASME A112.19.3M single compartment - 3505.2 mm (138 inches) wide. Drain shall have quick opening valve. Counter set.

Faucet and Spout - Cast or wrought copper alloy, with backflow preventer. Faucets shall have replaceable seat and the washer shall rotate onto the seat. Strainers shall have internal threads. Combination faucets with two valves and spouts shall be provided.

Handles - Cast copper alloy, wrought copper alloy, or stainless steel, four arm type.

Drain Assembly - Plug, cup strainer, crossbars, jam nuts, washers, couplings, stopper, etc. shall be copper alloy or stainless steel.

P-7 Shower: Shower heads, CID A-A-240 other than emergency showers, shall include a non-removable, tamperproof device to limit water flow to 0.16 liters per second (2.5 gpm) when tested in accordance with ASME A112.18.1M.

Wall Mounted: Shower head shall be nonadjustable spray, stainless steel or chromium plated brass with ball joint. Handles shall be chrome-plated die cast zinc alloy. Control valves shall be copper alloy and have metal integral parts of copper alloy, nickel alloy, or stainless steel. Valves shall be thermostatic mixing type. Shower head shall be vandalproof with integral back.

P-8 WATER COOLER DRINKING FOUNTAINS:

Water cooler drinking fountains shall: be self contained, conform to ARI 1010, use one of the fluorocarbon gases conforming to ARI 700 and ASHRAE 34

which has an Ozone Depletion Potential of less than or equal to 0.05, have a capacity to deliver 30.2 liters per hour (8 gph) of water at 10 degrees C (50 degrees F) with an inlet water temperature of 27 degrees C (80 degrees F) while residing in a room environment of 32 degrees C (90 degrees F), and have self-closing valves. Self-closing valves shall have automatic stream regulators, have a flow control capability, have a push button actuation or have a cross-shaped index metal turn handle without a hood. Exposed surfaces of stainless steel shall have No. 4 general polish finish. Spouts shall provide a flow of water at least 100 mm (4 inches) high so as to allow the insertion of a cup or glass under the flow of water.

Surface Wall-Mounted - Surface wall-mounted units shall be 336.6 mm (13-1/4 inches) wide, 330.2 mm (13 inches) deep, and have a back height of 152.4 to 203.2 mm (6 to 8 inches). The bowl shall be made of corrosion resisting steel. The unit shall have concealed fasteners and be for interior installation.

P-8 HANDICAPPED WATER COOLER DRINKING FOUNTAIN:

Handicapped - Handicapped units shall be surface wall-mounted. The dimensions shall be 381.0 mm (15 inches) wide, 508.0 mm (20 inches) deep, with a back height of 152.4 to 203.2 mm (6 to 8 inches). The unit shall clear the floor or ground by at least 200 mm (8 inches). A clear knee space shall exist between the bottom of the bowl and the floor or ground of at least 685 mm (27 inches) and between the front edge of the bowl and the body of the unit of at least 200 mm (8 inches). A 200 mm (8 inch) wide clear space shall exist on both sides of the unit. The spout height shall be no more than 1 m (36 inches) above the floor or ground to the outlet. The spout shall be at the front of the unit and direct the water flow in a trajectory that is parallel or nearly parallel to the front of the unit. The bowl shall be 165.1 mm (6-1/2 inches) high, made of corrosion resisting steel and be for interior installation.

FD-1 FLOOR DRAIN

ANSI A112.21.1; lacquered cast iron two-piece body with double drainage flange, weep holes, reversible clamping collar, and round, adjustable nickel-bronze strainer.

FD-2 FLOOR DRAIN

Same as FD-1 except with removable perforated sediment bucket and cast iron square strainer.

HB-1 HOSE BIBBS

Interior: Bronze or brass with integral mounting flange, replaceable hexagonal disc, hose thread spout, chrome plated where exposed with handwheel, integral vacuum breaker in conformance with ANSI/ASSE 1011.

Interior Mixing: Bronze or brass, wall mounted, double service faucet with hose thread spout, integral spout, integral stops, chrome plated where exposed with handwheels, and vacuum breaker in conformance with ANSI/ASSE 1011.

WH-1 HYDRANTS

Non-Freeze Wall Hydrant:

Acceptable Manufacturers

Wade
Josam
Woodford
Zurn

Non-Freeze Wall Hydrant: ANSI/ASSE 1019; non-freeze, self-draining type with chrome plated wall plate, hose thread spout, lockshield and removable key, and integral vacuum breaker.

3.11 POSTED INSTRUCTIONS

Operating instructions explaining preventive maintenance procedures, methods of checking the system for normal safe operation, and procedures for safely starting and stopping the system shall be prepared in typed form, framed as specified above for the wiring and control diagrams and posted beside the diagrams. The framed instructions shall be posted before acceptance testing of the systems.

3.12 PERFORMANCE OF WATER HEATING EQUIPMENT

Standard rating condition terms are as follows:

EF = Energy factor, overall efficiency.

ET = Thermal efficiency with 21 degrees C delta T.

EC = Combustion efficiency, 100 percent - flue loss when smoke = o (trace is permitted).

SL = Standby loss in W/0.093 sq. m. based on 27 degrees C delta T, or in percent per hour based on nominal 38 degrees C delta T.

HL = Heat loss of tank surface area.

V = Storage volume in liters

3.12.1 Storage Water Heaters

3.12.1.1 NOT USED

3.12.1.2 Gas

a. Storage capacity of 379 liters or less, and input rating of 21980 W or less: minimum EF shall be 0.62-0.0019V per 10 CFR 430.

b. Storage capacity of more than 379 liters - or input rating more than 21980 W: Et shall be 77 percent; maximum SL shall be 1.3+38/V, per ANSI Z21.10.3.

3.12.2 NOT USED

3.12.3 NOT USED

3.12.4 NOT USED

TABLE I
PIPE AND FITTING MATERIALS FOR
DRAINAGE, WASTE, AND VENT PIPING SYSTEMS

		SERVICE					
Item #	Pipe and Fitting Materials	A	B	C	D	E	F
1	Cast iron soil pipe and fittings, hub and spigot, ASTM A 74 with compression gaskets	X	X	X	X	X	
2	Cast iron pipe and fittings hubless, CISPI 301 and ASTM A 888		X		X		
3	Cast iron drainage fittings, threaded, ASME B16.12 for use with Item 10	X		X	X		
4	Cast iron screwed fittings (threaded) ASME B16.4 for use with Item 10				X	X	
5	Grooved pipe couplings, ferrous and non-ferrous pipe ASTM A 536 and ASTM A 47	X	X		X	X	
6	Ductile iron grooved joint fittings for ferrous pipe ASTM A 536 and ASTM A 47 for use with Item 5	X	X		X	X	
7	Bronze sand casting grooved joint pressure fittings for non-ferrous pipe ASTM B 584, for use with Item 5	X	X		X	X	
8	Wrought copper grooved joint pressure pressure fittings for non-ferrous pipe ASTM B 75 C12200, ASTM B 152 C11000, ASME B16.22 ASME B16.22 for use with Item 5	X	X				
9	Malleable-iron threaded fittings, galvanized ASME B16.3 for use with Item 10				X	X	
10	Steel pipe, seamless galvanized, ASTM A 53, Type S, Grade B	X			X	X	
11	Seamless red brass pipe, ASTM B 43			X	X		
12	Bronzed flanged fittings, ASME B16.24 for use with Items 11 and 14				X	X	
13	Cast copper alloy solder joint pressure fittings, ASME B16.18 for use with Item 14				X	X	

TABLE I
PIPE AND FITTING MATERIALS FOR
DRAINAGE, WASTE, AND VENT PIPING SYSTEMS

		SERVICE					
Item #	Pipe and Fitting Materials	A	B	C	D	E	F
14	Seamless copper pipe, ASTM B 42				X		
15	Cast bronze threaded fittings, ASME B16.15				X	X	
16	Copper drainage tube, (DWV), ASTM B 306	X*	X	X*	X	X	
17	Wrought copper and wrought alloy solder-joint drainage fittings. ASME B16.29	X	X	X	X	X	
18	Cast copper alloy solder joint drainage fittings, DWV, ASME B16.23	X	X	X	X	X	
19	Polyvinyl Chloride plastic drain, waste and vent pipe and fittings, ASTM D 2665, ASTM F 891, (Sch 40)	X	X	X	X	X	X
20	High-silicon content cast iron pipe and fittings (hub and spigot, and mechanical joint), ASTM A 518		X			X	

SERVICE:
_____

A - Underground Building Soil, Waste and Storm Drain
B - Aboveground Soil, Waste, Drain In Buildings
C - Underground Vent
D - Aboveground Vent
E - Interior Rainwater Conductors Aboveground
F - Corrosive Waste And Vent Above And Belowground
* - Hard Temper

TABLE II
PIPE AND FITTING MATERIALS FOR PRESSURE PIPING SYSTEMS

		SERVICE			
Item No.	Pipe and Fitting Materials	A	B	C	D
1	Malleable-iron threaded fittings, a. Galvanized, ASME B16.3 for use with Item 4a	X	X	X	X
	b. Same as "a" but not galvanized for use with Item 4b			X	
2	Grooved pipe couplings, ferrous pipe ASTM A 536 and ASTM A 47, non-ferrous pipe, ASTM A 536 and ASTM A 47	X	X	X	
3	Ductile iron grooved joint fittings for ferrous pipe ASTM A 536 and ASTM A 47 for use with Item 2	X	X	X	
4	Steel pipe: a. Seamless, galvanized, ASTM A 53, Type S, Grade B	X	X	X	X
	b. Seamless, black, ASTM A 53, Type S, Grade B			X	
5	Seamless red brass pipe, ASTM B 43	X	X		X
6	Bronze flanged fittings, ASME B16.24 for use with Item 4	X	X		X
7	Seamless copper pipe, ASTM B 42	X	X		X
8	Seamless copper water tube, ASTM B 88	X**	X**	X**	X***
9	Seamless and welded copper distribution tube (Type D) ASTM B 641	X**	X**	X**	X****
10	Cast bronze threaded fittings, ASME B16.15 for use with Items 7 and 8	X	X		X
11	Wrought copper and bronze solder-joint pressure fittings, ASME B16.22 for use with Items 7 and 8	X	X	X	X
12	Cast copper alloy solder-joint pressure fittings, ASME B16.18 for use with Items 7 and 8	X	X	X	X

TABLE II
PIPE AND FITTING MATERIALS FOR PRESSURE PIPING SYSTEMS

		SERVICE			
Item No.	Pipe and Fitting Materials	A	B	C	D
13	Bronze and sand castings grooved joint pressure fittings for non-ferrous pipe ASTM B 584, for use with Item 2	X	X	X	
14	Polyethylene (PE) plastic pipe, Schedules 40 and 80, based on outside diameter ASTM D 2447	X			X
15	Polyethylene (PE) plastic pipe (SDR-PR), based on controlled outside diameter, ASTM D 3035	X			X
16	Polyethylene (PE) plastic pipe (SIDR-PR), based on controlled inside diameter, ASTM D 2239	X			X
17	Butt fusion polyethylene (PE) plastic pipe fittings, ASTM D 3261 for use with Items 12, 13, and 16	X			X
18	Socket-type polyethylene fittings for outside diameter-controlled polyethylene pipe, ASTM D 2683 for use with Item 13	X			X
19	Polyethylene (PE) plastic tubing, ASTM D 2737	X			X
20	Chlorinated polyvinyl chloride (CPVC) plastic hot and cold water distribution system, ASTM D 2846	X	X		X
21	Chlorinated polyvinyl chloride (CPVC) plastic pipe, Schedule 40 and 80, ASTM F 441	X			X
22	Chlorinated polyvinyl chloride (CPVC) plastic pipe (SDR-PR) ASTM F 442	X			X
23	Threaded chlorinated polyvinyl chloride (CPVC) plastic pipe fittings, Schedule 80, ASTM F 437, for use with Items 20, and 21	X	X		X
24	Socket-type chlorinated polyvinyl chloride (CPVC) plastic pipe fittings, Schedule 40, ASTM F 438 for use with Item 23	X	X		X

TABLE II
PIPE AND FITTING MATERIALS FOR PRESSURE PIPING SYSTEMS

		SERVICE			
Item No.	Pipe and Fitting Materials	A	B	C	D
25	Socket-type chlorinated polyvinyl chloride (CPVC) plastic pipe fittings Schedule 80, ASTM F 439 for use with Item 23	X	X		X
26	Polyvinyl chloride (PVC) plastic pipe, Schedules 40, 80, and 120, ASTM D 1785	X			X
27	Polyvinyl chloride (PVC) pressure-rated pipe (SDR Series), ASTM D 2241	X			X
28	Polyvinyl chloride (PVC) plastic pipe fittings, Schedule 40, ASTM D 2466	X			X
29	Socket-type polyvinyl chloride (PVC) plastic pipe fittings, schedule 80, ASTM D 2467	X			X
30	Threaded polyvinyl chloride (PVC) plastic pipe fittings, schedule 80, ASTM D 2464	X			X
31	Joints for IPS pvs pipe using solvent cement, ASTM D 2672	X			X
32	Filament-wound reinforced thermosetting resin (RTRP) pipe, ASTM D 2996	X	X		
33	Steel pipeline flanges, MSS SP-44	X	X		
34	Fittings: brass or bronze; ASME B16.15, and ASME B16.18 ASTM B 828	X	X		
35	Carbon steel pipe unions, socket-welding and threaded, MSS SP-83	X	X	X	
36	Malleable-iron threaded pipe unions ASME B16.39	X	X		
37	Nipples, pipe threaded ASTM A 733	X	X	X	

A - Cold Water Aboveground

B - Hot Water 82 degree C Maximum Aboveground

C - Compressed Air Lubricated

D - Cold Water Service Belowground

Indicated types are minimum wall thicknesses.

** - Type L - Hard

*** - Type K - Hard temper with brazed joints only or type K-soft temper without joints in or under floors

**** - In or under slab floors only brazed joints

TABLE III
STANDARD RATING CONDITIONS AND MINIMUM PERFORMANCE RATINGS FOR WATER HEATING EQUIPMENT

A. STORAGE WATER HEATERS

FUEL	STORAGE CAPACITY LITERS	INPUT RATING	TEST PROCEDURE	REQUIRED PERFORMANCE
Gas	380 max.	22 kW max.	10 CFR 430	EF = 0.62-0.0019V minimum
Gas	380 min. OR	22 kW min.	ANSI Z21.10.3	ET= 77 percent; SL = 1.3+38/V max.

TERMS:

EF = Energy factor, overall efficiency.
ET = Thermal efficiency with 21 degrees C delta T.
EC = Combustion efficiency, 100 percent - flue loss when smoke = 0 (trace is permitted).
SL = Standby loss in W/0.09 sq. m. based on 27 degrees C delta T, or in percent per hour based on nominal 32 degrees C delta T.
HL = Heat loss of tank surface area
V = Storage volume in gallons

-- End of Section --

SECTION 15488

GAS PIPING SYSTEMS

PART 1 GENERAL

1.1 REFERENCES

The publications listed below form a part of this specification to the extent referenced. The publications are referred to in the text by basic designation only.

AMERICAN GAS ASSOCIATION (AGA)

AGA-01	(1989) A.G.A. Plastic Pipe Manual for Gas Service

AMERICAN NATIONAL STANDARDS INSTITUTE

ANSI Z21.45	(1992; Z21.4a; Z21.4b) Flexible Connectors of Other Than All-Metal Construction for Gas Appliances
ANSI Z21.69	(1992; Z21.69a) Connectors for Movable Gas Appliances

AMERICAN PETROLEUM INSTITUTE (API)

API Spec 6D	(1994) Specification for Pipeline Valves (Gate, Plug, Ball, and Check Valves)

AMERICAN SOCIETY FOR TESTING AND MATERIALS (ASTM)

ASTM A 539	(1990a) Electric-Resistance-Welded Coiled Steel Tubing for Gas and Fuel Oil Lines
ASTM B 88	(1995a) Seamless Copper Water Tube
ASTM B 210	(1995) Aluminum and Aluminum-Alloy Drawn Seamless Tubes
ASTM B 241	(1995a) Aluminum and Aluminum-Alloy Seamless Pipe and Seamless Extruded Tube
ASTM B 280	(1993a) Seamless Copper Tube for Air Conditioning and Refrigeration Field Service
ASTM D 2513	(1995c) Thermoplastic Gas Pressure Pipe, Tubing, and Fittings
ASTM D 2517	(1981; R 1987) Reinforced Epoxy Resin Gas Pressure Pipe and Fittings

AMERICAN SOCIETY OF MECHANICAL ENGINEERS (ASME)

ASME B1.20.1	(1983; R 1992) Pipe Threads, General

	Purpose (Inch)
ASME B16.3	(1992) Malleable Iron Threaded Fittings
ASME B16.5	(1988; Errata Oct 88; B16.5a) Pipe Flanges and Flanged Fittings
ASME B16.9	(1993) Factory-Made Wrought Steel Buttwelding Fittings
ASME B16.11	(1991) Forged Fittings, Socket-Welding and Threaded
ASME B16.21	(1992) Nonmetallic Flat Gaskets for Pipe Flanges
ASME B16.33	(1990) Manually Operated Metallic Gas Valves for Use in Gas Piping Systems Up to 125 psig (Sizes 1/2 through 2)
ASME B31.1	(1995) Power Piping
ASME B31.2	(1968) Fuel Gas Piping
ASME B36.10M	(1985; R 1994) Welded and Seamless Wrought Steel Pipe
ASME BPV IX	(1995; Addenda Dec 1995) Boiler and Pressure Vessel Code; Section IX, Welding and Brazing Qualifications

MANUFACTURERS STANDARDIZATION SOCIETY OF THE VALVE AND FITTINGS INDUSTRY (MSS)

MSS SP-25	(1993) Standard Marking System for Valves, Fittings, Flanges and Unions
MSS SP-58	(1993) Pipe Hangers and Supports - Materials, Design and Manufacture
MSS SP-69	(1991) Pipe Hangers and Supports - Selection and Application

NATIONAL FIRE PROTECTION ASSOCIATION (NFPA)

NFPA 54	(1992) National Fuel Gas Code
NFPA 70	(1996) National Electrical Code

STEEL STRUCTURES PAINTING COUNCIL (SSPC)

SSPC SP 6	(1994) Commercial Blast Cleaning

UNDERWRITERS LABORATORIES (UL)

UL-06	(1994; Supple; Rev thru March 1996)Gas and Oil Equipment Directory

1.2 GENERAL REQUIREMENTS

1.2.1 Welding

Piping shall be welded in accordance with qualified procedures using performance qualified welders and welding operators. Procedures and welders shall be qualified in accordance with ASME BPV IX. Welding procedures qualified by others, and welders and welding operators qualified by another employer may be accepted as permitted by ASME B31.1. The Contracting Officer shall be notified at least 24 hours in advance of tests and the tests shall be performed at the work site if practicable. The Contracting Officer shall be furnished with a copy of qualified procedures and a list of names and identification symbols of qualified welders and welding operators. The welder or welding operator shall apply his assigned symbol near each weld he makes as a permanent record.

1.2.2 Jointing Thermoplastic and Fiberglass Piping

Piping shall be jointed by performance qualified joiners using qualified procedures in accordance with AGA-01. Plastic Pipe Manual for Gas Service. The Contracting Officer shall be furnished with a copy of qualified procedures and list of and identification symbols of qualified joiners.

1.2.3 Standard Products

Materials and equipment shall be the standard products of a manufacturer regularly engaged in the manufacture of the products and shall essentially duplicate items that have been in satisfactory use for at least 2 years prior to bid opening. Asbestos or products containing asbestos shall not be used. Manufacturer's descriptive data and installation instructions shall be submitted for approval for compression-type mechanical joints used in joining dissimilar materials and for insulating joints. Valves, flanges and fittings shall be marked in accordance with MSS SP-25.

1.2.4 Verification of Dimensions

The Contractor shall become familiar with all details of the work, verify all dimensions in the field, and shall advise the Contracting Officer of any discrepancy before performing the work.

1.3 SUBMITTALS

Government approval is required for submittals with a "GA" designation; submittals having an "FIO" designation are for information only. The following shall be submitted in accordance with Section 01330 SUBMITTAL PROCEDURES:

SD-01 Data

Qualifications; GA.

Qualified procedures and a list of names and identification symbols of qualified welders and welding operators.

SD-04 Drawings

Gas Piping System; GA.

Drawings showing location, size and all branches of pipeline; location of all required shutoff valves; and instructions necessary for the

installation of connectors and supports.

PART 2 PRODUCTS

2.1 PIPE AND FITTINGS

2.1.1 Steel Pipe, Joints, and Fittings

Steel pipe shall conform to ASME B36.10M. Malleable-iron threaded fittings shall conform to ASME B16.3. Steel pipe flanges and flanged fittings including bolts, nuts, and bolt pattern shall be in accordance with ASME B16.5. Wrought steel buttwelding fittings shall conform to ASME B16.9. Socket welding and threaded forged steel fittings shall conform to ASME B16.11.

2.1.2 Aluminum Alloy Pipe and Tubing, Joints, and Fittings

Aluminum alloy pipe shall conform to ASTM B 241, except alloy 5456 shall not be used, and the ends of each length of pipe shall be marked indicating it conforms to NFPA 54. Pipe joints shall be threaded, flanged, brazed or welded.

Aluminum alloy tubing shall conform to ASTM B 210, Type A or B, or ASTM B 241, Type A or equivalent. Tubing joints shall be made up with gas tubing fittings recommended by the tubing manufacturer.

2.1.3 Copper Tubing, Joints and Fittings

Copper tubing shall conform to ASTM B 88, Type K or L, or ASTM B 280. Tubing joints shall be made up with tubing fittings recommended by the tubing manufacturer.

2.1.4 Steel Tubing, Joints and Fittings

Steel tubing shall conform to ASTM A 539. Tubing joints shall be made up with gas tubing fittings recommended by the tubing manufacturer.

2.1.5 Thermoplastic Pipe, Tubing, Joints, and Fittings

Thermoplastic pipe, tubing, joints and fittings shall conform to ASTM D 2513.

2.1.6 Fiberglass Pipe, Joints, and Fittings

Fiberglass piping systems shall conform to ASTM D 2517.

2.1.7 Sealants for Steel Pipe Threaded Joints

Joint sealing compound shall be listed in UL-06, Class 20 or less. Tetrafluoroethylene tape shall conform to UL-06.

2.1.8 Identification

Pipe flow markings and metal tags shall be provided as required.

2.1.9 Flange Gaskets

Gaskets shall be nonasbestos compressed material in accordance with ASME B16.21, 1.6 mm (1/16 inch) thickness, full face or self-centering flat ring type. The gaskets shall contain aramid fibers bonded with styrene

butadiene rubber (SBR) or nitrile butadiene rubber (NBR) suitable for a maximum 316 degrees C (600 degrees F) service. NBR binder shall be used for hydrocarbon service.

2.1.10 Pipe Threads

Pipe threads shall conform to ASME B1.20.1.

2.1.11 Escutcheons

Escutcheons shall be chromium-plated steel or chromium-plated brass, either one piece or split pattern, held in place by internal spring tension or set screw.

2.1.12 Gas Transition Fittings

Gas transition fittings shall be manufactured steel fittings approved for jointing metallic and thermoplastic or fiberglass pipe. Approved transition fittings are those that conform to AGA-01 requirements for transitions fittings.

2.1.13 Insulating Pipe Joints

2.1.13.1 Insulating Joint Material

Insulating joint material shall be provided between flanged or threaded metallic pipe systems where shown to control galvanic or electrical action.

2.1.13.2 Threaded Pipe Joints

Joints for threaded pipe shall be steel body nut type dielectric unions with insulating gaskets.

2.1.13.3 Flanged Pipe Joints

Joints for flanged pipe shall consist of full face sandwich-type flange insulating gasket of the dielectric type, insulating sleeves for flange bolts, and insulating washers for flange nuts.

2.1.14 Flexible Connectors

Flexible connectors for connecting gas utilization equipment to building gas piping shall conform to ANSI Z21.45. Flexible connectors for movable food service equipment shall conform to ANSI Z21.69.

2.2 VALVES

Valves shall be suitable for shutoff or isolation service and shall conform to the following:

2.2.1 Valves 50 mm (2 Inches) and Smaller

Valves 50 mm (2 inches) and smaller shall conform to ASME B16.33 and shall be of materials and manufacture compatible with system materials used.

2.2.2 Valves 65 mm (2-1/2 Inches) and Larger

Valves 65 mm (2-1/2 inches) and larger shall be carbon steel conforming to API Spec 6D, Class 150.

2.3 PIPE HANGERS AND SUPPORTS

Pipe hangers and supports shall conform to MSS SP-58 and MSS SP-69.

2.4 METERS, REGULATORS AND SHUTOFF VALVES

Meters, regulators and shutoff valves shall be as specified in Section 02685 GAS DISTRIBUTION SYSTEM.

PART 3 EXECUTION

3.1 EXCAVATION AND BACKFILLING

Earthwork shall be as specified in Section 02222 EXCAVATION, TRENCHING AND BACKFILLING FOR UTILITIES SYSTEMS.

3.2 GAS PIPING SYSTEM

Gas piping system shall be from the point of delivery, defined as the outlet of the meter set assembly, specified in Section 02685 GAS DISTRIBUTION SYSTEM, to the connections to each gas utilization device.

3.2.1 Protection of Materials and Components

Pipe and tube openings shall be closed with caps or plugs during installation. Equipment shall be protected from dirt, water, and chemical or mechanical damage. At the completion of all work, the entire system shall be thoroughly cleaned.

3.2.2 Workmanship and Defects

Piping, tubing and fittings shall be clear and free of cutting burrs and defects in structure or threading and shall be thoroughly brushed and chip-and scale-blown. Defects in piping, tubing or fittings shall not be repaired. When defective piping, tubing, or fittings are located in a system, the defective material shall be replaced.

3.3 PROTECTIVE COVERING

3.3.1 Underground Metallic Pipe

Buried metallic piping shall be protected from corrosion with protective coatings as specified in Section 02685 GAS DISTRIBUTION SYSTEM. When dissimilar metals are joined underground, gastight insulating fittings shall be used.

3.3.2 Aboveground Metallic Piping Systems

3.3.2.1 Ferrous Surfaces

Shop primed surfaces shall be touched up with ferrous metal primer. Surfaces that have not been shop primed shall be solvent cleaned. Surfaces that contain loose rust, loose mill scale and other foreign substances shall be mechanically cleaned by power wire brushing or commercial sand blasted conforming to SSPC SP 6 and primed with ferrous metal primer. Primed surface shall be finished with two coats of exterior oil paint.

3.3.2.2 Nonferrous Surfaces

Except for aluminum alloy pipe, nonferrous surfaces shall not be painted. Surfaces of aluminum alloy pipe and fittings shall be painted to protect against external corrosion where they contact masonry, plaster, insulation, or are subject to repeated wettings by such liquids as water, detergents or sewage. The surfaces shall be solvent-cleaned and treated with vinyl type wash coat. A first coat of aluminum paint and a second coat of alkyd gloss enamel or silicone alkyd copolymer enamel shall be applied.

3.4 INSTALLATION

Installation of the gas system shall be in conformance with the manufacturer's recommendations and applicable provisions of NFPA 54, AGA-01, and as indicated. Pipe cutting shall be done without damage to the pipe. Unless otherwise authorized, cutting shall be done by an approved type of mechanical cutter. Wheel cutters shall be used where practicable. On steel pipe 150 mm (6 inches) and larger, an approved gas cutting and beveling machine may be used. Cutting of thermoplastic and fiberglass pipe shall be in accordance with AGA-01.

3.4.1 Metallic Piping Installation

Underground piping shall be buried a minimum of 600 mm below grade. Changes in direction of piping shall be made with fittings only; metering or notching pipe to form elbows and tees or other similar type construction will not be permitted. Branch connection may be made with either tees or forged branch outlet fittings. Branch outlet fittings shall be forged, flared for improvement of flow where attached to the run, and reinforced against external strains. Aluminum alloy pipe shall not be used in exterior locations or underground.

3.4.2 Metallic Tubing Installation

Metallic tubing shall be installed using gas tubing fittings approved by the tubing manufacturer. Branch connections shall be made with tees. All tubing end preparation shall be made with tools designed for the purpose. Aluminum alloy tubing shall not be used in exterior locations or underground.

3.4.3 Thermoplastic and Fiberglass Piping, Tubing, and Fittings

Thermoplastic and fiberglass piping, tubing, and fittings shall be installed outside and underground only. Piping shall be buried a minimum of 600 mm below grade. The piping shall be installed to avoid excessive stresses due to thermal contraction. Thermoplastic and fiberglass piping shall only be allowed as indicated.

3.4.4 Connections Between Metallic and Plastic Piping

Connections shall be made only outside, underground, and with approved transition fittings.

3.4.5 NOT USED

3.4.6 NOT USED

3.4.7 Aboveground Piping

Aboveground piping shall be run as straight as practicable along the

alignment indicated and with a minimum of joints. Piping shall be separately supported. Exposed horizontal piping shall not be installed farther than 150 mm from nearest parallel wall in laundry areas where clothes hanging could be attempted.

3.4.8 Final Gas Connections

Unless otherwise specified herein, final connections shall be made with rigid metallic pipe and fittings. Provide accessible gas shutoff valve and coupling for each gas equipment item.

3.5 PIPE JOINTS

Pipe joints shall be designed and installed to effectively sustain the longitudinal pull-out forces caused by contraction of the piping or superimposed loads.

3.5.1 Threaded Metallic Joints

Threaded joints in metallic pipe shall have tapered threads evenly cut and shall be made with UL approved graphite joint sealing compound for gas service or tetrafluoroethylene tape applied to the male threads only. Threaded joints up to 40 mm in diameter may be made with approved tetrafluoroethylene tape. Threaded joints up to 50 mm in diameter may be made with approved joint sealing compound. After cutting and before threading, pipe shall be reamed and burrs shall be removed. Caulking of threaded joints to stop or prevent leaks shall not be permitted.

3.5.2 Welded Metallic Joints

Beveling, alignment, heat treatment, and inspection of welds shall conform to ASME B31.2. Weld defects shall be removed and repairs made to the weld, or the weld joints shall be entirely removed and rewelded. After filler metal has been removed from its original package, it shall be protected or stored so that its characteristics or welding properties are not affected adversely. Electrodes that have been wetted or have lost any of their coating shall not be used.

3.5.3 Thermoplastic and Fiberglass Joints

Jointing procedures shall conform to AGA-01. Solvent cement or heat of fusion joints shall not be made between different kinds of plastics.

3.5.4 Flared Metallic Tubing Joints

Flared joints in metallic tubing shall be made with special tools recommended by the tubing manufacturer. Flared joints shall be used only in systems constructed from nonferrous pipe and tubing, when experience or tests have demonstrated that the joint is suitable for the conditions, and when adequate provisions are made in the design to prevent separation of the joints. Metallic ball sleeve compression-type tubing fittings shall not be used for tubing joints.

3.5.5 Solder or Brazed Joints

Joints in metallic tubing and fittings shall be made with materials and procedures recommended by the tubing supplier. Joints shall be brazed with material having a melting point above 538 degrees C (1000 degrees F). Brazing alloys shall not contain phosphorous.

3.5.6 Joining Thermoplastic or Fiberglass to Metallic Piping or Tubing

When compression type mechanical joints are used, the gasket material in the fittings shall be compatible with the plastic piping and with the gas in the system. An internal tubular rigid stiffener shall be used in conjunction with the fitting, and the stiffener shall be flush with end of the pipe or tubing and shall extend at least to the outside end of the compression fitting when installed. The stiffener shall be free of rough or sharp edges and shall not be a force fit in the plastic. A split tubular stiffener shall not be used.

3.6 PIPE SLEEVES

Pipes passing through concrete or masonry walls or concrete floors or roofs shall be provided with pipe sleeves fitted into place at the time of construction. Sleeves shall not be installed in structural members except where indicated or approved. All rectangular and square openings shall be as detailed. Each sleeve shall extend through its respective wall, floor or roof, and shall be cut flush with each surface, except in mechanical room floors not located on grade where clamping flanges or riser pipe clamps are used. Sleeves in mechanical room floors above grade shall extend at least 100 mm above finish floor. Unless otherwise indicated, sleeves shall be large enough to provide a minimum clearance of 6.4 mm all around the pipe. Sleeves in bearing walls, waterproofing membrane floors, and wet areas shall be steel pipe. Sleeves in nonbearing walls, floors, or ceilings may be steel pipe, galvanized sheet metal with lock-type longitudinal seam, or moisture-resistant fiber or plastic. For penetrations of fire walls, fire partitions and floors which are not on grade, the annular space between the pipe and sleeve shall be sealed with firestopping material and sealant that meet the requirement of Section 07840 FIRESTOPPING.

3.7 NOT USED

3.8 NOT USED

3.9 ESCUTCHEONS

Escutcheons shall be provided for all finished surfaces where gas piping passes through floors, walls, or ceilings except in boiler, utility, or equipment rooms.

3.10 SPECIAL REQUIREMENTS

Drips, grading of the lines, freeze protection, and branch outlet locations shall be as shown and shall conform to the requirements of NFPA 54.

3.11 BUILDING STRUCTURE

Building structure shall not be weakened by the installation of any gas piping. Beams or joists shall not be cut or notched.

3.12 PIPING SYSTEM SUPPORTS

Gas piping systems in buildings shall be supported with pipe hooks, metal pipe straps, bands or hangers suitable for the size of piping or tubing. Gas piping system shall not be supported by other piping. Spacing of supports in gas piping and tubing installations shall conform to the

requirements of NFPA 54. The selection and application of supports in gas piping and tubing installations shall conform to the requirements of MSS SP-69. In the support of multiple pipe runs on a common base member, a clip or clamp shall be used where each pipe crosses the base support member. Spacing of the base support members shall not exceed the hanger and support spacing required for any of the individual pipes in the multiple pipe run. The clips or clamps shall be rigidly connected to the common base member. A clearance of 3.2 mm shall be provided between the pipe and clip or clamp for all piping which may be subjected to thermal expansion.

3.13 ELECTRICAL BONDING AND GROUNDING

A gas piping system within a building shall be electrically continuous and bonded to a grounding electrode as required by NFPA 70.

3.14 SHUTOFF VALVE

Main gas shutoff valve controlling the gas piping system shall be easily accessible for operation and shall be installed as indicated, protected from physical damage, and marked with a metal tag to clearly identify the piping system controlled.

3.15 NOT USED

3.16 TESTING

Before any section of a gas piping system is put into service, it shall be carefully tested to assure that it is gastight. Prior to testing, the system shall be blown out, cleaned and cleared of all foreign material. Each joint shall be tested by means of an approved gas detector, soap and water, or an equivalent nonflammable solution. Testing shall be completed before any work is covered, enclosed, or concealed. All testing of piping systems shall be done with due regard for the safety of employees and the public during the test. Bulkheads, anchorage and bracing suitably designed to resist test pressures shall be installed if necessary. Oxygen shall not be used as a testing medium.

3.16.1 Pressure Tests

Before appliances are connected, piping systems shall be filled with air or an inert gas and shall withstand a minimum pressure of 21 kPa (3 psi) gauge for a period of not less than 10 minutes as specified in NFPA 54 without showing any drop in pressure. Oxygen shall not be used. Pressure shall be measured with a mercury manometer, slope gauge, or an equivalent device so calibrated as to be read in increments of not greater than 1 kPa (0.1 pound). The source of pressure shall be isolated before the pressure tests are made.

3.16.2 NOT USED

3.16.3 Test With Gas

Before turning gas under pressure into any piping, all openings from which gas can escape shall be closed. Immediately after turning on the gas, the piping system shall be checked for leakage by using a laboratory-certified gas meter, an appliance orifice, a manometer, or equivalent device. All testing shall conform to the requirements of NFPA 54. If leakage is recorded, the gas supply shall be shut off, the leak shall be repaired, and

the tests repeated until all leaks have been stopped.

3.16.4 Purging

After testing is completed, and before connecting any appliances, all gas piping shall be fully purged. LPG piping tested using fuel gas with appliances connected does not require purging. Piping shall not be purged into the combustion chamber of an appliance. The open end of piping systems being purged shall not discharge into confined spaces or areas where there are ignition sources unless the safety precautions recommended in NFPA 54 are followed.

3.16.5 Labor, Materials and Equipment

All labor, materials and equipment necessary for conducting the testing and purging shall be furnished by the Contractor.

-- End of Section --

SECTION 15565

HEATING SYSTEM; GAS-FIRED HEATERS

PART 1 GENERAL

1.1 REFERENCES

The publications listed below form a part of this specification to the extent referenced. The publications are referred to in the text by basic designation only.

AMERICAN NATIONAL STANDARDS INSTITUTE (ANSI)

ANSI Z21.66	(1996) Automatic Vent Damper Devices for Use with Gas-Fired Appliances
ANSI Z83.4	(1991; Z83.4a) Direct Gas-Fired Make-Up Air Heaters
ANSI Z83.6	(1990; Z83.6a; Z83.6b) Gas-Fired Infrared Heaters
ANSI Z83.8	(1996) Gas Unit Heaters
ANSI Z83.9	(1990; Z83.9a) Gas-Fired Duct Furnaces

INTERNATIONAL APPROVAL SERVICES (IAS)

IAS-01	(1996) IAS Directory of AGA & CGA Certified Appliances and Accessories

NATIONAL ELECTRICAL MANUFACTURERS ASSOCIATION (NEMA)

NEMA MG 1	(1993; Rev 1; Rev 2; Rev 3) Motors and Generators

NATIONAL FIRE PROTECTION ASSOCIATION (NFPA)

NFPA NFPA 54/ANSI Z223.1	(1996; Errata) National Fuel Gas Code
NFPA 211	(1996) Chimneys, Fireplaces, Vents, and Solid Fuel-Burning Appliances

UNDERWRITERS LABORATORIES (UL)

UL Gas&Oil Dir	(1997) Gas and Oil Equipment Directory

1.2 SUBMITTALS

Government approval is required for submittals with a "GA" designation; submittals having an "FIO" designation are for information only. The following shall be submitted in accordance with Section 01330 SUBMITTAL PROCEDURES:

SD-01 Data

Heating System; GA.

Spare parts data for each different item of materials and equipment specified, after approval of the detail drawings, and not later than two months prior to the date of beneficial occupancy. The data shall include a complete list of parts and supplies, with current unit prices and source of supply.

SD-04 Drawings

Heating System; GA.

Detail drawings consisting of illustrations, schedules, performance charts, instructions, brochures, diagrams, and other information to illustrate the requirements and operation of the system. Detail drawings for space heating equipment, controls, associated equipment, and for piping and wiring. Drawings shall show proposed layout and anchorage of equipment and appurtenances, and equipment relationship to other parts of the work including clearances for maintenance and operation.

SD-06 Instructions

Heating System; GA.

Six complete copies of operating instructions outlining the step-by-step procedures required for system startup, operation and shutdown. The instructions shall include the manufacturer's name, model number, service manual, parts list, and brief description of all equipment and basic operating features. Six complete copies of maintenance instructions listing routine maintenance, possible breakdowns, repairs and troubleshooting guide. The instructions shall include simplified piping, wiring, and control diagrams for the system as installed.

SD-09 Reports

Testing, Adjusting, and Balancing; GA.

Test reports shall be submitted in booklet form showing all field tests performed to adjust each component and all field tests performed to prove compliance with the specified performance criteria, upon completion and testing of the installed system. Each test report shall indicate the final position of controls.

1.3 GENERAL REQUIREMENTS

1.3.1 Nameplates

Each major component of equipment shall have the manufacturer's name, address, type or style, model or serial number, and catalog number on a plate secured to the equipment.

1.3.2 Equipment Guards

Belts, pulleys, chains, gears, couplings, projecting setscrews, keys, and other rotating parts so located that any person may come in close proximity thereto shall be completely enclosed or guarded. High-temperature equipment and piping so located as to endanger personnel or create a fire hazard shall be guarded or covered with insulation of type specified for

service.

1.3.3 Verification of Dimensions

The Contractor shall become thoroughly familiar with all details of the work, verify all dimensions in the field, and shall advise the Contracting Officer of any discrepancy before performing any work.

1.4 DELIVERY AND STORAGE

All equipment delivered and placed in storage shall be stored with protection from weather, humidity and temperature variations, dirt and dust, or other contaminants.

PART 2 PRODUCTS

2.1 STANDARD PRODUCTS

Material and equipment shall be standard products of a manufacturer regularly engaged in manufacturing of the products. Equipment shall essentially duplicate equipment that has been in satisfactory use at least 2 years prior to bid opening.

2.2 ELECTRICAL WORK

Electrical motor driven equipment shall be provided complete with motors, motor starters, and controls. Motors shall conform to NEMA MG 1. Electrical equipment and wiring shall be in accordance with Section 16415 ELECTRICAL WORK, INTERIOR. Electrical characteristics shall be as specified or indicated. Unless otherwise indicated motors of 745.7 W (1 Hp) and above shall be high efficiency type. Motor starters shall be provided complete with thermal overload protection and other appurtenances necessary for the motor control specified. Each motor shall be of sufficient size to drive the equipment at the specified capacity without exceeding the nameplate rating of the motor. Manual or automatic control and protective or signal devices required for the operation specified and any control wiring required for controls and devices specified, but not shown, shall be provided.

2.3 HEATERS

Heaters shall be equipped for and adjusted to burn natural gas. Each heater shall be provided with a gas pressure regulator that will satisfactorily limit the main gas burner supply pressure. Heaters shall have an intermittent or interrupted electrically ignited pilot or a direct electric ignition system. Safety controls shall conform to the ANSI standard specified for each heater. Mounting brackets and hardware shall be furnished by the heater manufacturer and shall be factory finished to match the supported equipment.

2.3.1 Indirect Fired Make-Up Air Heater

Heaters shall be in accordance with ANSI Z83.4. Indirect fired make-up air heaters use outside air directly ducted to the heat exchanger. The products of combustion generated by the heater are released into the gravity vent. Heaters shall be equipped with motorized inlet and backdraft dampers, discharge air diffuser, air filters, and bird screen. Gas control valve shall be modulating type. Maximum air temperature rise during minimum burner fire shall be 4 degrees C (7 degrees F). Motorized dampers

shall be closed when the unit is shut down. Dampers shall be interlocked to prevent burner operation when dampers are closed. Heaters shall be provided with a discharge air thermostat, a low limit air stream thermostat, and an ambient air thermostat. The discharge air thermostat shall control the modulating gas control valve. The low limit air stream thermostat shall shut down the entire unit if the discharge air temperature drops below the discharge thermostat setting. The ambient air thermostat shall shut down the burner if the outside air exceeds the space thermostat setting.

2.3.2 Unit Heaters

Heaters shall conform to requirements of ANSI Z83.8. Heat exchangers shall be stainless steel. Air discharge section shall be equipped with adjustable horizontal louvers and vertical louvers or fins. Heater fan motors shall operate at a speed not in excess of 1,550 rpm for units with output capacities up to and including 17.6 kW (60,000 Btuh) and not in excess of 1,200 rpm for units with capacities above 17.6 kW (60,000 Btuh). Fan shafts shall be either directly connected to the driving motor, or indirectly connected by multiple V-belt drive. Fans in one unit shall be of the same size. Heaters shall be power-vented type, suitable for sidewall vent discharge and single-wall-thickness vent piping. Heaters shall have automatic ignition. Heaters shall employ metered combustion air with enclosed draft diverter (no open flue collar). Heaters shall have minimum steady state efficiencies of 80 percent at maximum rated capacity and 75 percent at minimum rated capacity that is provided and allowed by the controls. Heaters shall be provided with a space thermostat which controls both unit's fan and burner.

2.3.3 NOT USED

2.3.4 Duct Furnace

Duct furnace shall be in accordance with ANSI Z83.9. Furnace shall be power-vented type, suitable for sidewall vent discharge and single wall thickness vent piping. Furnace shall have automatic ignition. Furnace shall employ metered combustion air with enclosed draft diverter (no open flue collar). Furnace heat exchangers shall be stainless steel. Furnace shall have minimum steady state efficiency of 80 percent at maximum rated capacity and 75 percent at minimum rated capacity that is provided and allowed by the controls. Furnace shall be provided with a space thermostat which is tied into the DDC and controls the unit's burner.

2.3.5 Infrared Heaters

Heaters shall conform to the requirements of ANSI Z83.6 and shall be vented as indicated. Vented heaters shall be vented to the outside atmosphere. Heater style shall be vacuum tubular type. Reflector shape shall be standard. Heaters shall be provided with space thermostats which control the unit's burner. Thermostats located in the direct radiation pattern shall be covered with a metal shield. Each burner shall include a vacuum differential switch for complete shutdown. The system shall be of negative pressure and be equipped with a prepurge and postpurge mode.

2.4 THERMOSTATS

Thermostats shall be the adjustable electric or electronic type. Control wiring required to complete the space temperature control system shall be included. Thermostats shall have a 2 degree C (3 degree F) differential

and a set point range of 4 to 24 degree C (40 to 75 degrees F). Thermostats shall be the single stage type.

2.5 VENT PIPING

Vent piping shall conform to the requirements of NFPA NFPA 54/ANSI Z223.1. Plastic material polyetherimide (PEI) and polyethersulfone (PES) are forbidden to be used for vent piping of combustion gases.

2.6 ELECTRIC AUTOMATIC VENT DAMPERS

Electric automatic vent dampers shall conform to the requirements of ANSI Z21.66 and shall be provided in the vents of heaters using indoor air for combustion air.

2.7 INSULATION

Insulation for piping and equipment and application shall be in accordance with Section 15080 THERMAL INSULATION FOR MECHANICAL SYSTEMS.

2.8 FACTORY FINISHES

Equipment and component items, when fabricated from ferrous metal, shall be factory finished with the manufacturer's standard finish.

PART 3 EXECUTION

3.1 INSTALLATION

Equipment shall be installed as indicated and in accordance with the recommendations of the equipment manufacturer and the listing agency, except as otherwise specified.

3.1.1 Heating Equipment

Heaters shall be installed with clearance to combustibles complying with minimum distances as determined by IAS-01, UL Gas&Oil Dir and as indicated on each heater approval and listing plate. Heaters shall be independently supported from the building structure as indicated and shall not rely on support from suspended ceiling systems.

3.1.2 Vents

Vent dampers, piping and structural penetrations shall be located as indicated. Vent damper installation shall conform to ANSI Z21.66. Vent pipes, where not connected to a masonry chimney conforming to NFPA 211, shall extend through the roof or an outside wall and shall terminate, in compliance with NFPA NFPA 54/ANSI Z223.1. Vents passing through waterproof membranes shall be provided with the necessary flashings to obtain waterproof installations.

3.1.3 Gas Piping

Gas piping shall be connected as indicated and shall comply with the applicable requirements at Section 15488 GAS PIPING SYSTEMS.

3.2 TESTING, ADJUSTING, AND BALANCING

Testing, adjusting, and balancing shall be as specified in Section 15990

TESTING, ADJUSTING, AND BALANCING OF HVAC SYSTEMS.

3.3 Training

The Contractor shall conduct a training course for the maintenance and operating staff. The training period of 8 hours normal working time shall start after the system is functionally complete but before the final acceptance tests. The training shall include all of the items contained in the operating and maintenance instructions as well as demonstrations of routine maintenance operations. The Contracting Officer shall be given at least two weeks advance notice of such training.

-- End of Section --

SECTION 15653

AIR-CONDITIONING SYSTEM (UNITARY TYPE)

PART 1 GENERAL

1.1 REFERENCES

The publications listed below form a part of this specification to the extent referenced. The publications are referred to in the text by basic designation only.

AIR CONDITIONING AND REFRIGERATION INSTITUTE (ARI)

ARI ANSI/ARI 210/240	(1994) Unitary Air-Conditioning and Air-Source Heat Pump Equipment
ARI 270	(1995) Sound Rating of Outdoor Unitary Equipment
ARI 460	(1994) Remote Mechanical-Draft Air-Cooled Refrigerant Condensers
ARI 700	(1995) Specifications for Fluorocarbon and Other Refrigerants
ARI ANSI/ARI 710	(1986) Liquid-Line Driers
ARI ANSI/ARI 720	(1988) Refrigerant Access Valves and Hose Connectors
ARI 750	(1994) Thermostatic Refrigerant Expansion Valves
ARI 760	(1994) Solenoid Valves for Use with Volatile Refrigerants

AMERICAN NATIONAL STANDARDS INSTITUTE (ANSI)

ANSI A13.1	(1981; R 1993) Scheme for the Identification of Piping Systems

AMERICAN SOCIETY FOR TESTING AND MATERIALS (ASTM)

ASTM A 53	(1997) Pipe, Steel, Black and Hot-Dipped, Zinc-Coated, Welded and Seamless
ASTM A 307	(1994) Carbon Steel Bolts and Studs, 60 000 PSI Tensile Strength
ASTM A 334/A 334M	(1996) Seamless and Welded Carbon and Alloy-Steel Tubes for Low-Temperature Service
ASTM A 653/A 653M	(1996) Steel Sheet, Zinc-Coated (Galvanized) or Zinc-Iron Alloy-Coated

	(Galvannealed) by the Hot-Dip Process
ASTM B 117	(1997) Operating Salt Spray (Fog) Apparatus
ASTM B 280	(1995a) Seamless Copper Tube for Air Conditioning and Refrigeration Field Service
ASTM C 534	(1994) Preformed Flexible Elastomeric Cellular Thermal Insulation in Sheet and Tubular Form
ASTM C 1071	(1991) Thermal and Acoustical Insulation (Glass Fiber, Duct Lining Material)
ASTM D 520	(1984; R 1995) Zinc Dust Pigment
ASTM E 437	(1992) Industrial Wire Cloth and Screens (Square Opening Series)
ASTM F 104	(1993) Nonmetallic Gasket Materials

AMERICAN SOCIETY OF HEATING, REFRIGERATING AND AIR-CONDITIONING ENGINEERS (ASHRAE)

ASHRAE 15	(1994) Safety Code for Mechanical Refrigeration
ASHRAE 34	(1992; Addenda a-j) Number Designation and Safety Classification of Refrigerants
ASHRAE 52.1	(1992) Gravimetric and Dust-Spot Procedures for Testing Air-Cleaning Devices Used in General Ventilation for Removing Particulate Matter

AMERICAN SOCIETY OF MECHANICAL ENGINEERS (ASME)

ASME B1.20.1	(1983; R 1992) Pipe Threads, General Purpose (Inch)
ASME B31.1	(1995; B31.1a; B31.1b; B31.1c) Power Piping
ASME B31.5	(1992; B31.5a) Refrigeration Piping
ASME B40.1	(1991) Gauges - Pressure Indicating Dial Type - Elastic Element
ASME BPV VIII Div 1	(1998) Boiler and Pressure Vessel Code; Section VIII, Pressure Vessels Division 1 - Basic Coverage
ASME BPV IX	(1998) Boiler and Pressure Vessel Code; Section IX, Welding and Brazing Qualifications

AMERICAN WELDING SOCIETY (AWS)

AWS A5.8	(1992) Filler Metals for Brazing and Braze Welding

MANUFACTURERS STANDARDIZATION SOCIETY OF THE VALVE AND FITTINGS INDUSTRY (MSS)

MSS SP-58	(1993) Pipe Hangers and Supports - Materials, Design and Manufacture
MSS SP-69	(1996) Pipe Hangers and Supports - Selection and Application

NATIONAL ELECTRICAL MANUFACTURERS ASSOCIATION (NEMA)

NEMA ICS 6	(1993) Industrial Control and Systems, Enclosures
NEMA MG 1	(1993; Rev 1; Rev 2; Rev 3) Motors and Generators
NEMA MG 2	(1989) Safety Standard for Construction and Guide for Selection, Installation, and Use of Electric Motors and Generators

NATIONAL FIRE PROTECTION ASSOCIATION (NFPA)

NFPA 70	(1996; Errata 96-4) National Electrical Code

SHEET METAL AND AIR CONDITIONING CONTRACTORS NATIONAL ASSOCIATION (SMACNA)

SMACNA-10	(1985) HVAC Air Duct Leakage Test Manual

UNDERWRITERS LABORATORIES (UL)

UL 586	(1996) High-Efficiency, Particulate, Air Filter Units
UL 900	(1994; Rev thru Apr 1997) Test Performance of Air Filter Units
UL 1995	(1995; Rev thru Feb 97) Heating and Cooling Equipment

1.2 SUBMITTALS

Government approval is required for submittals with a "GA" designation; submittals having an "FIO" designation are for information only. The following shall be submitted in accordance with Section 01330 SUBMITTAL PROCEDURES:

SD-01 Data

Air-Conditioning/Gas Heat System; GA.

Manufacturer's standard catalog data, prior to the purchase or installation of a particular component, shall be highlighted to show brand name, model number, size, options, performance charts and curves, etc. in sufficient detail to demonstrate compliance with contract requirements. Data shall be submitted for each specified component. Data shall include manufacturer's

recommended installation instructions and procedures. If vibration isolation is specified for a unit, vibration isolator literature shall be included containing catalog cuts and certification that the isolation characteristics of the isolators provided meet the manufacturer's recommendations.

Spare Parts Data; GA.

Spare parts data for each different item of equipment specified, after approval of detail drawings and not later than 1 month prior to the date of beneficial occupancy. The data shall include a complete list of parts and supplies, with current unit prices and source of supply, a recommended spare parts list for 1 year of operation, and a list of the parts recommended by the manufacturer to be replaced on a routine basis.

SD-04 Drawings

Air-Conditioning/Gas Heat System; GA.

Drawings shall provide adequate detail to demonstrate compliance with contract requirements. Drawings shall consist of:

(1) Equipment layouts which identify assembly and installation details.

(2) Piping layouts which identify valves and fittings.

(3) Plans and elevations which identify clearances required for maintenance and operation.

(4) Wiring diagrams which identify each component individually and interconnected or interlocked relationships between components.

(5) Foundation drawings, bolt-setting information, and foundation bolts prior to concrete foundation construction for equipment indicated or required to have concrete foundations.

(6) Details, if piping and equipment are to be supported other than as indicated, which include loadings and type of frames, brackets, stanchions, or other supports.

(7) Automatic temperature control diagrams and control sequences.

(8) Installation details which includes the amount of factory set superheat and corresponding refrigerant pressure/temperature.

SD-06 Instructions

Framed Instructions; FIO.

Framed instructions for posting, at least 2 weeks prior to construction completion.

SD-07 Schedules

Tests; FIO.

A letter, at least 10 working days in advance of each tests, advising the Contracting Officer of the test. Individual letters shall be submitted for

the condenser water system, refrigerant system, ductwork leak tests, cooling tower tests, condenser water quality tests, and the system performance tests. Each letter shall identify the date, time, and location for each test.

Demonstrations; GA.

A letter, at least 14 working days prior to the date of the proposed training course, which identifies the date, time, and location for the training.

SD-08 Statements

Qualifications; GA.

A letter listing the qualifying procedures for each welder. The letter shall include supporting data such as test procedures used, what was tested etc., and a list of the names of qualified welders and their identification symbols.

Verification of Dimensions; FIO.

A letter, at least 2 weeks prior to beginning construction, including the date the site was visited, conformation of existing conditions, and any discrepancies found.

SD-09 Reports

Tests; GA.

Six copies of each test containing the information described below in bound 216 x 279 mm (8-1/2 x 11 inch) booklets. Individual reports shall be submitted for the condenser water system, refrigerant system, ductwork leak tests, and the cooling tower tests.

(1) The date the tests were performed.

(2) A list of equipment used, with calibration certifications.

(3) Initial test summaries.

(4) Repairs/adjustments performed.

(5) Final test results.

System Performance Tests; GA.

Six copies of the report shall be provided in bound 216 x 279 mm (8-1/2 x 11 inch) booklets. The report shall document compliance with the specified performance criteria upon completion and testing of the system. The report shall indicate the number of days covered by the tests and any conclusions as to the adequacy of the system. The report shall also include the following information and shall be taken at least three different times at outside dry-bulb temperatures that are at least 3 degrees C apart:

(1) Date and outside weather conditions.

(2) The load on the system based on the following:

(a) The refrigerant used in the system.
(b) Condensing temperature and pressure.
(c) Suction temperature and pressure.
(d) Ambient, condensing and coolant temperatures
(e) Running current, voltage and proper phase sequence for each phase of all motors.

(3) The actual on-site setting of operating and safety controls.

(4) Thermostatic expansion valve superheat - value as determined by field test

(5) Subcooling

(6) High and low refrigerant temperature switch set-points

(7) Low oil pressure switch set-point

(8) Defrost system timer and thermostat set-points

(9) Moisture content

(10) Capacity control set-points

(11) Field data and adjustments which affect unit performance and energy consumption.

(12) Field adjustments and settings which were not permanently marked as an integral part of a device.

Inspections; GA.

Test report, at the completion of one year of service, in bound 216 x 279 mm (8-1/2 x 11 inch) booklets. The report shall identify the condition of the cooling tower and condenser. The report shall also include a comparison of the condition of the cooling tower and condenser with the manufacturer's recommended operating conditions.

SD-13 Certificates

Air-Conditioning/Gas Heat System; GA.

Where the system, components, or equipment are specified to comply with requirements of ARI, ASHRAE, ASME, or UL, proof of such compliance shall be provided. The label or listing of the specified agency shall be acceptable evidence. In lieu of the label or listing, a written certificate from an approved, nationally recognized testing organization equipped to perform such services, stating that the items have been tested and conform to the requirements and testing methods of the specified agency may be submitted. When performance requirements of this project's drawings and specifications vary from standard ARI rating conditions, computer printouts, catalog, or other application data certified by ARI or a nationally recognized laboratory as described above shall be included. If ARI does not have a current certification program that encompasses such application data, the manufacturer may self certify that his application data complies with project performance requirements in accordance with the specified test standards.

Service Organizations; GA.

A certified list of qualified permanent service organizations for support of the equipment which includes their addresses and qualifications. The service organizations shall be reasonably convenient to the equipment installation and be able to render satisfactory service to the equipment on a regular and emergency basis during the warranty period of the contract.

SD-19 Operation and Maintenance Manuals

Operation Manual; GA.

Six complete copies of an operation manual in bound 216 x 279 mm (8-1/2 x 11 inch) booklets listing step-by-step procedures required for system startup, operation, and shutdown. The booklets shall include the manufacturer's name, model number, and parts list. The manuals shall include the manufacturer's name, model number, service manual, and a brief description of all equipment and their basic operating features.

Maintenance Manual; GA.

Six complete copies of maintenance manual in bound 216 x 279 mm (8-1/2 x 11 inch) booklets listing routine maintenance procedures, possible breakdowns and repairs, and a trouble shooting guide. The manuals shall include piping and equipment layouts and simplified wiring and control diagrams of the system as installed.

1.3 QUALIFICATIONS

Piping shall be welded in accordance with the qualified procedures using performance qualified welders and welding operators. Procedures and welders shall be qualified in accordance with ASME BPV IX. Welding procedures qualified by others, and welders and welding operators qualified by another employer may be accepted as permitted by ASME B31.1. The Contracting Officer shall be notified 24 hours in advance of tests and the tests shall be performed at the work site if practical. The welder or welding operator shall apply his assigned symbol near each weld he makes as a permanent record.

1.4 DELIVERY, STORAGE, AND HANDLING

Stored items shall be protected from the weather and contamination. Proper protection and care of all material before, during, and after installation shall be the Contractor's responsibility. Any materials found to be damaged shall be replaced at the Contractor's expense. During installation, piping and similar openings shall be capped to keep out dirt and other foreign matter.

1.5 PROJECT/SITE CONDITIONS

1.5.1 Verification of Dimensions

The Contractor shall become familiar with all details of the work, verify dimensions in the field, and advise the Contracting Officer of any discrepancy before performing any work.

1.5.2 Drawings

Because of the small scale of the drawings, it is not possible to indicate

all offsets, fittings, and accessories that may be required. The Contractor shall carefully investigate the plumbing, fire protection, electrical, structural and finish conditions that would affect the work to be performed and arrange such work accordingly, furnishing required offsets, fittings, and accessories to meet such conditions. Equipment, ductwork, and piping arrangements shall fit into space allotted and allow adequate acceptable clearances for installation, replacement, entry, servicing, and maintenance.

PART 2 PRODUCTS

2.1 STANDARD PRODUCTS

Materials and equipment shall be standard products of a manufacturer regularly engaged in the manufacturing of such products, which are of a similar material, design and workmanship. The standard products shall have been in satisfactory commercial or industrial use for 2 years prior to bid opening. The 2 year use shall include applications of equipment and materials under similar circumstances and of similar size. The 2 years experience shall be satisfactorily completed by a product which has been sold or is offered for sale on the commercial market through advertisements, manufacturer's catalogs, or brochures. Products having less than a 2 year field service record shall be acceptable if a certified record of satisfactory field operation, for not less than 6000 hours exclusive of the manufacturer's factory tests, can be shown. Products shall be supported by a service organization. System components shall be environmentally suitable for the indicated locations.

2.2 NAMEPLATES

Major equipment including compressors, condensers, receivers, heat exchanges, fans, cooling towers, pumps and motors shall have the manufacturer's name, address, type or style, model or serial number, and catalog number on a plate secured to the item of equipment. Plates shall be durable and legible throughout equipment life and made of anodized aluminum. Plates shall be fixed in prominent locations with nonferrous screws or bolts.

2.3 ELECTRICAL WORK

Electrical equipment, motors, motor efficiencies, and wiring shall be in accordance with Section 16415 ELECTRICAL WORK, INTERIOR. Electrical motor driven equipment specified shall be provided complete with motors, motor starters, and controls. Electrical characteristics shall be as shown, and unless otherwise indicated, all motors of 746 kW (1 hp) and above with open, dripproof, totally enclosed, or explosion proof fan cooled enclosures, shall be high efficiency type. Field wiring shall be in accordance with manufacturer's instructions. Each motor shall conform to NEMA MG 1 and NEMA MG 2 and be of sufficient size to drive the equipment at the specified capacity without exceeding the nameplate rating of the motor. Motors shall be continuous duty with the enclosure specified. Motor starters shall be provided complete with thermal overload protection and other appurtenances necessary for the motor control indicated. Motors shall be furnished with a magnetic across-the-line or reduced voltage type starter as required by the manufacturer. Motor duty requirements shall allow for maximum frequency start-stop operation and minimum encountered interval between start and stop. Motors shall be sized for the applicable loads. Motor torque shall be capable of accelerating the connected load within 20 seconds with 80 percent of the rated voltage maintained at motor

terminals during one starting period. Motor bearings shall be fitted with grease supply fittings and grease relief to outside of enclosure. Manual or automatic control and protective or signal devices required for the operation specified and any control wiring required for controls and devices specified, but not shown, shall be provided.

2.4 MISCELLANEOUS MATERIALS

2.4.1 Gaskets

Gaskets shall conform to ASTM F 104 - classification for compressed sheet with nitrile binder and acrylic fibers for maximum 370 degrees C (700 degrees F) service.

2.4.2 Bolts and Nuts

Bolts and nuts, except as required for piping applications, shall be in accordance with ASTM A 307. The bolt head shall be marked to identify the manufacturer and the standard with which the bolt complies in accordance with ASTM A 307.

2.4.3 Pipe Hangers, Inserts, and Supports

Pipe hangers, inserts, and supports shall conform to MSS SP-58 and MSS SP-69.

2.4.4 Escutcheons

Escutcheons shall be chromium-plated iron or chromium-plated brass, either one piece or split pattern, held in place by internal spring tension or set screws.

2.4.5 Pressure and Vacuum Gauge

Gauge shall conform to ASME B40.1, Class 1, 2, or 3, Style X, Type I or III as required, 115 mm (4-1/2 inches) in diameter with phenolic or metal case. Each gauge range shall be selected so that at normal operating pressure, the needle is within the middle-third of the range.

2.4.6 Temperature Gauges

Industrial duty thermometers shall be provided for the required temperature range. Thermometers shall have Celsius scale in 1 degree graduations scale on a white face. The pointer shall be adjustable.

2.4.6.1 Stem Cased-Glass

Stem cased-glass case shall be polished stainless steel or cast aluminum, 229 mm (9 inches) long, with clear acrylic lens, and non-mercury filled glass tube.

2.4.6.2 Bimetallic Dial

Bimetallic dial type case shall be not less than 89 mm (3-1/2 inches), stainless steel, and shall be hermetically sealed with clear acrylic lens. Bimetallic element shall be silicone dampened and unit fitted with external calibrator adjustment. Accuracy shall be one percent of dial range.

2.4.6.3 Liquid-, Solid-, and Vapor-Filled Dial

Liquid-, solid-, and vapor-filled dial type cases shall be not less than 89 mm (3-1/2 inches), stainless steel or cast aluminum with clear acrylic lens. Fill shall be nonmercury, suitable for encountered cross-ambients, and connecting capillary tubing shall be double-braided bronze.

2.4.6.4 Thermal Well

Thermal well shall be identical size, 15 or 20 mm (1/2 or 3/4 inch) NPT connection, brass or stainless steel. Where test wells are indicated, provide captive plug-fitted type 15 mm (1/2 inch) NPT connection suitable for use with either engraved stem or standard separable socket thermometer or thermostat. Extended neck thermal wells shall be of sufficient length to clear insulation thickness by 25 mm.

2.4.7 Unicellular Plastic Foam

Unicellular plastic foam shall be in accordance with ASTM C 534, Form T, except that D-Factor shall not exceed 0.28 at 24 degrees C (75 degrees F) mean temperature.

2.4.8 Bird Screen

Screen shall be in accordance with ASTM E 437, Type 1, Class 1, 2 by 2 mesh, 1.6 mm (0.063 inch) diameter aluminum wire or 0.79 mm (0.031 inch) diameter stainless steel wire.

2.5 NOT USED

2.6 NOT USED

2.7 UNITARY EQUIPMENT, SPLIT SYSTEM

Unit shall be an air-cooled, split system which employs a remote condensing unit, a separate indoor unit, and interconnecting refrigerant piping. Unit shall be the air-conditioning type conforming to applicable Underwriters Laboratories (UL) standards including UL 1995. Unit shall be rated in accordance with ARI ANSI/ARI 210/240. Unit shall be provided as specified in paragraph "System Components". The remote unit shall be as specified in paragraph REMOTE CONDENSER OR CONDENSING UNIT. Evaporator or supply fans shall be double-width, double inlet, forward curved, backward inclined, or airfoil blade, centrifugal scroll type. Condenser or outdoor fans shall be the manufacturer's standard for the unit specified and may be either propeller or centrifugal scroll type. Fan and condenser motors shall have dripproof enclosures.

2.7.1 Air-to-Refrigerant Coil

Coils shall have nonferrous tubes of 10 mm (3/8 inch) minimum diameter with copper or aluminum fins that are mechanically bonded or soldered to the tubes. Coils shall be protected with a minimum 0.076 mm thick phenolic or vinyl coating. Casing shall be galvanized steel or aluminum. Contact of dissimilar metals shall be avoided. Coils shall be tested in accordance with ASHRAE 15 at the factory and be suitable for the working pressure of the installed system. Each coil shall be dehydrated and sealed after testing and prior to evaluation and charging. Each unit shall be provided with a factory operating charge of refrigerant and oil or a holding charge. Unit shipped with a holding charge shall be field charged. Separate expansion devices shall be provided for each compressor circuit.

2.7.2 Compressor

Compressor shall be direct drive, semi-hermetic or hermetic reciprocating, or scroll type capable of operating at partial load conditions. Compressor shall be capable of continuous operation down to the lowest step of unloading as specified. Compressors of 35 kW (10 tons) and larger shall be provided with capacity reduction devices to produce automatic capacity reduction of at least 50 percent. If standard with the manufacturer, two or more compressors may be used in lieu of a single compressor with unloading capabilities, in which case the compressors will operate in sequence, and each compressor shall have an independent refrigeration circuit through the condenser and evaporator. Each compressor shall start in the unloaded position. Each compressor shall be provided with vibration isolators, crankcase heater, thermal overloads, high and low pressure safety cutoffs and protection against short cycling.

2.7.3 Refrigeration Circuit

Refrigerant-containing components shall comply with ASHRAE 15 and be factory tested, cleaned, dehydrated, charged, and sealed. Refrigerant charging valves and connections, and pumpdown valves shall be provided for each circuit. Filter-drier shall be provided in each liquid line and be reversible-flow type. Refrigerant flow control devices shall be an adjustable superheat thermostatic expansion valve with external equalizer matched to coil, capillary or thermostatic control, and a pilot solenoid controlled, leak-tight, four-way refrigerant flow reversing valve.

2.7.4 Unit Controls

Controls shall be provided as specified in Section 15951 DIRECT DIGITAL CONTROL FOR HVAC EQUIPMENT.

2.8 NOT USED

2.9 NOT USED

2.10 REMOTE CONDENSER OR CONDENSING UNIT

Units with capacities less than 39.5 kW (135,000 Btuh) shall produce a sound rating in accordance with ARI 270. Each remote condenser coil shall be fitted with a manual isolation valve and an access valve on the coil side. Saturated refrigerant condensing temperature shall not exceed 49 degrees C (120 degrees F) at 40 degrees C (95 degrees F) ambient. Fan and cabinet construction shall be provided as specified in paragraph "System Components". Fan and condenser motors shall have dripproof enclosures.

2.10.1 Air-Cooled Condenser

Unit shall be rated in accordance with ARI 460 and conform to the requirements of UL 1995. Unit shall be factory fabricated, tested, packaged, and self-contained. Unit shall be complete with casing, propeller or centrifugal type fans, heat rejection coils, connecting piping and wiring, and all necessary appurtenances.

2.10.1.1 Connections

Interconnecting refrigeration piping, electrical power, and control wiring between the condensing unit and the indoor unit shall be provided as required and as indicated. Electrical and refrigeration piping terminal

connections between condensing unit and evaporator units shall be provided.

2.10.1.2 NOT USED

2.10.1.3 Condensing Coil

Coils shall have nonferrous tubes of 10 mm (3/8 inch) minimum diameter with copper or aluminum fins that are mechanically bonded or soldered to the tubes. Coils shall be protected with a minimum 0.076 mm (3 mil) thick phenolic or vinyl coating. Casing shall be galvanized steel or aluminum. Contact of dissimilar metals shall be avoided. Coils shall be tested in accordance with ASHRAE 15 at the factory and be suitable for the working pressure of the installed system. Each coil shall be dehydrated and sealed after testing and prior to evaluation and charging. Each unit shall be provided with a factory operating charge of refrigerant and oil or a holding charge. Unit shipped with a holding charge shall be field charged. Separate expansion devices shall be provided for each compressor circuit.

2.10.1.4 Unit Controls

The control system shall be complete with required accessories for regulating condenser pressure by fan cycling, solid-state variable fan speed, modulating condenser coil or fan dampers, flooding the condenser, or a combination of the above. Unit mounted control panels or enclosures shall be constructed in accordance with applicable requirements of NFPA 70 and housed in NEMA ICS 6, Class 1 or 3A enclosures. Controls shall include control transformer, fan motor starters, time delay start-up, overload protective devices, interface with local and remote components, and intercomponent wiring to terminal block points.

2.10.2 NOT USED

2.10.3 Compressor

Compressor shall be direct drive, semi-hermetic or hermetic reciprocating, or scroll type capable of operating at partial load conditions. Compressor shall be capable of continuous operation down to the lowest step of unloading as specified. Units 35 kW (120,000 Btuh) and larger shall be provided with capacity reduction devices to produce automatic capacity reduction of at least 50 percent. If standard with the manufacturer, two or more compressors may be used in lieu of a single compressor with unloading capabilities, in which case the compressors will operate in sequence, and each compressor shall have an independent refrigeration circuit through the condenser and evaporator. Each compressor shall start in the unloaded position. Each compressor shall be provided with vibration isolators, crankcase heater, thermal overloads, and high and low pressure safety cutoffs and protection against short cycling.

2.11 NOT USED

2.12 SYSTEM COMPONENTS

2.12.1 Refrigerant and Oil

Refrigerant shall be one of the fluorocarbon gases. Refrigerants shall have number designations and safety classifications in accordance with ASHRAE 34. Refrigerants shall meet the requirements of ARI 700 as a minimum. Refrigerants shall have an Ozone Depletion Potential (ODP) of less than or equal to 0.05. Contractor shall provide and install a

complete charge of refrigerant for the installed system as recommended by the manufacturer. Except for factory sealed units, two complete charges of lubricating oil for each compressor crankcase shall be furnished. One charge shall be used during the system performance testing period. Following the satisfactory completion of the performance testing, the oil shall be drained and replaced with a second charge. Lubricating oil shall be of a type and grade recommended by the manufacturer for each compressor. Where color leak indicator dye is incorporated, charge shall be in accordance with manufacturer's recommendation.

2.12.2 Fans

Fan wheel shafts shall be supported by either maintenance-accessible lubricated antifriction block-type bearings, or permanently lubricated ball bearings. Unit fans shall be selected to produce the cfm required at the fan total pressure. Motor starters, if applicable, shall be magnetic across-the-line type with a dripproof enclosure. Thermal overload protection shall be of the manual or automatic-reset type. Fan wheels or propellers shall be constructed of aluminum or galvanized steel. Centrifugal fan wheel housings shall be of galvanized steel, and both centrifugal and propeller fan casings shall be constructed of aluminum or galvanized steel. Steel elements of fans, except fan shafts, shall be hot-dipped galvanized after fabrication or fabricated of mill galvanized steel. Mill-galvanized steel surfaces and edges damaged or cut during fabrication by forming, punching, drilling, welding, or cutting shall be recoated with an approved zinc-rich compound. Fan wheels or propellers shall be statically and dynamically balanced. Direct-drive fan motors shall be of the multiple-speed variety. Belt-driven fans shall have adjustable sheaves. The sheave size shall be selected so that the fan speed at the approximate midpoint of the sheave adjustment will produce the specified air quantity. Centrifugal scroll-type fans shall be provided with streamlined orifice inlet and V-belt drive. Each drive will be independent of any other drive. Propeller fans shall be direct-drive type with fixed pitch blades. V-belt driven fans shall be mounted on a corrosion protected drive shaft supported by either maintenance-accessible lubricated antifriction block-type bearings, or permanently lubricated ball bearings. Each drive will be independent of any other drive. Drive bearings shall be protected with water slingers or shields. V-belt drives shall be fitted with guards where exposed to contact by personnel and adjustable pitch sheaves.

2.12.3 Primary/Supplemental Heating

2.12.3.1 NOT USED

2.12.3.2 NOT USED

2.12.3.3 NOT USED

2.12.3.4 Gas Fired Heating Section

Gas-fired duct furnace shall be provided as specified in Section 15565, HEATING SYSTEM; GAS FIRED HEATERS.

2.12.4 Air Filters

Air filters shall be listed in accordance with requirements of UL 900, except high efficiency particulate air filters of 99.97 percent efficiency by the DOP Test Method shall be as listed under the label service and shall

meet the requirements of UL 586.

2.12.4.1 NOT USED

2.12.4.2 Replaceable Media Filters

Replaceable media filters shall be the dry-media type, of the size required to suit the application. Filtering media shall be not less than 50 mm (2 inches) thick fibrous glass media pad supported by a structural wire grid or woven wire mesh. Pad shall be enclosed in a holding frame of not less than 1.6 mm (16 gauge) galvanized steel, and equipped with quick-opening mechanism for changing filter media. The air flow capacity of the filter shall be based on net filter face velocity not exceeding 1.52 m/s (300 feet per minute), with initial resistance of 32 Pa (0.13 inches water gauge). Average efficiency shall be not less than 30 percent when tested in accordance with ASHRAE 52.1.

2.12.5 NOT USED

2.12.6 NOT USED

2.12.7 Internal Dampers

Dampers shall be parallel blade type with renewable blade seals and be integral to the unitary unit. Damper provisions shall be provided for each outside air intake, exhaust, economizer, and mixing boxes. Dampers shall have minimum position stops automatic modulation and operate as specified.

2.12.8 Mixing Boxes

Mixing boxes shall match the base unit in physical size and shall include equally-sized openings, each capable of full air flow. Arrangement shall be as indicated.

2.12.9 Cabinet Construction

Casings for the specified unitary equipment shall be constructed of galvanized steel or aluminum sheet metal and galvanized or aluminum structural members. Minimum thickness of single wall exterior surfaces shall be 1.3 mm (18 gauge) galvanized steel or 1.8 mm (.071 inch) thick aluminum on units with a capacity above 70 kW (20 tons) and 1.0 mm (20 gauge) galvanized steel or 1.6 mm (0.064 inch) thick aluminum on units with a capacity less than 70 kW (20 tons). Casing shall be fitted with lifting provisions, access panels or doors, fan vibration isolators, electrical control panel, corrosion-resistant components, structural support members, insulated condensate drip pan and drain, and internal insulation in the cold section of the casing. Where double-wall insulated construction is proposed, minimum exterior galvanized sheet metal thickness shall be 1.0 mm (20 gauge). Provisions to permit replacement of major unit components shall be incorporated. Penetrations of cabinet surfaces, including the floor, shall be sealed. Unit shall be fitted with a drain pan which extends under all areas where water may accumulate. Drain pan shall be fabricated from Type 300 stainless steel, galvanized steel with protective coating as required, or an approved plastic material. Pan insulation shall be water impervious. Extent and effectiveness of the insulation of unit air containment surfaces shall prevent, within limits of the specified insulation, heat transfer between the unit exterior and ambient air, heat transfer between the two conditioned air streams, and condensation on surfaces. Insulation shall conform to ASTM C 1071. Paint

and finishes shall comply with the requirements specified in paragraph "Factory Coating".

2.12.9.1 Indoor Cabinet

Indoor cabinets shall be suitable for the specified indoor service and enclose all unit components.

2.12.9.2 Outdoor Cabinet

Outdoor cabinets shall be suitable for outdoor service with a weathertight, insulated and corrosion-protected structure. Cabinets constructed exclusively for indoor service which have been modified for outdoor service are not acceptable.

2.13 NOT USED

2.14 NOT USED

2.15 NOT USED

2.16 NOT USED

2.17 NOT USED

2.18 NOT USED

2.19 NOT USED

2.20 NOT USED

2.21 NOT USED

2.22 NOT USED

2.23 TEMPERATURE CONTROLS

Temperature controls shall be in accordance with Section 15951 DIRECT DIGITAL CONTROL FOR HVAC SYSTEMS.

2.24 DUCTWORK COMPONENTS

2.24.1 Metal Ductwork

Ductwork shall be provided as specified in Section 15895, AIR SUPPLY, DISTRIBUTION, VENTILATION, AND EXHAUST SYSTEM.

2.25 NOT USED

2.26 REFRIGERANT PIPING

Refrigerant piping, valves, fittings, and accessories shall conform to the requirements of ASHRAE 15 and ASME B31.5, except as specified.

2.26.1 Steel Pipe

Steel pipe for refrigerant service shall conform to ASTM A 53, Schedule 40, Type E or S, Grades A or B. Type F pipe shall not be used.

2.26.2 Joints and Fittings, Steel Pipe

Joints and fittings shall be steel butt-welding, socket-welding, or malleable iron threaded type. Pipe shall be welded except that joints on lines 50 mm (2 inches) and smaller may be threaded. Threads shall be tapered type conforming to ASME B1.20.1. The malleable iron threaded type fitting shall be of a weight corresponding to adjacent pipe. Flanges and flange faces of fittings shall be tongue-and-groove type with gaskets suitable for the refrigerant used; size 25 mm (1 inch) and smaller shall be oval, two-bolt type; size above 25 mm (1 inch), up to and including 100 mm (4 inches), shall be square four-bolt type; and sizes over 100 mm (4 inches) shall be round.

2.26.3 Steel Tubing

Steel tubing for refrigeration service shall be in accordance with ASTM A 334/A 334M, Grade 1. Tubing with a nominal diameter of 10 mm (3/8 inch) or 15 mm (1/2 inch) shall have a wall thickness of 1.22 mm (0.049 inches). Tubing with a nominal diameter of 20 mm (3/4 inch) through 50 mm (2 inches) shall have a wall thickness of 1.62 mm (0.065 inches). Tubing with a nominal diameter of 65 through 100 mm (2 1/2 inches through 4 inches) shall have a wall thickness of 2.4 mm (0.095 inches). Steel tubing shall be cold-rolled, electric-forged, welded-steel. One end of the tubing shall be provided with a socket. Steel tubing shall be cleaned, dehydrated, and capped.

2.26.4 Joints and Fittings, Steel Tubing

Joints and fittings shall be socket type provided by the steel tubing manufacturer.

2.26.5 Copper Tubing

Copper tubing shall conform to ASTM B 280 annealed or hard drawn as required. Copper tubing shall be soft annealed where bending is required and hard drawn where no bending is required. Soft annealed copper tubing shall not be used in sizes larger than 35 mm (1-3/8 inches). Joints shall be brazed except that joints on lines 22 mm (7/8 inch) and smaller may be flared.

2.26.6 Joints and Fittings, Copper Tubing

Copper tube joints and fittings shall be flare joint type with short-shank flare, or solder-joint pressure type. Joints and fittings for brazed joint shall be wrought-copper or forged-brass sweat fittings. Cast sweat-type joints and fittings shall not be allowed for brazed joints.

2.26.7 Valves

Valves shall be pressure and temperature rated for contained refrigerant service and shall comply with ASME B31.5. Metals of construction shall be ferrous or copper based. Atmosphere exposed valve stems shall be stainless steel or corrosion resistant metal plated carbon steel. Valve body connections shall be brazed or welded socket, flanged or combination thereof. Threaded connections shall not be used, except in pilot pressure or gauge lines where maintenance disassembly is required and welded flanges cannot be used. Valves shall be suitable for or fitted with extended copper ends for brazing in-place without disassembly. Ferrous body valves shall be fitted with factory fabricated and brazed copper transitions. To

minimize system pressure drops, where practicable, globe valves shall be angle body type, and straight line valves shall be full port ball type. Control valve inlets shall be fitted with integral or adapted strainer or filter where recommended or required by manufacturer. Valves shall be cleaned and sealed moisture-tight.

2.26.7.1 Refrigerant-Stop Valves

Valves, in sizes through 15 mm (5/8 inch), shall be handwheel operated, straight or angle, packless diaphragm globe type with back-seating stem, brazed ends, except where SAE flare or retained seal cap connections are required. In sizes over 15 mm (5/8 inch), valves shall be globe or angle type, wrench operated with ground-finish stems, or ball valves, packed especially for refrigerant service, back seated, and provided with seal caps. Refrigerant isolation and shut-off valves shall have retained or captive spindles and facilities for tightening or replacement of the gland packing under line pressure as applicable. Stop valves shall have back-seating plated steel stem, bolted bonnet in sizes 25 mm (1-1/8 inches) OD and larger, integral or flanged transition brazed socket. Valves in sizes through 65 mm (2-1/2 inches) shall be end-entry body assembly, full-port, floating ball type, with equalizing orifice fitted chrome plated ball, seats and seals of tetrafluoroethylene, chrome plated or stainless steel stem, and seal cap. In sizes 100 mm (4 inch) IPS and larger, and in smaller sizes where carbon steel piping is used, valve bodies shall be tongue and groove flanged and complete with mating flange, gaskets and bolting for socket or butt-weld connection. Purge, charge and receiver valves shall be of manufacturer's standard configuration.

2.26.7.2 Check Valves

Valve shall be designed for service application, spring-loaded type where required, with resilient seat and with flanged body in sizes 15 mm (1/2 inch) and larger. Valve shall provide positive shut-off at 10 kPa (1-1/2 psi) differential pressure.

2.26.7.3 Liquid Solenoid Valves

Valves shall comply with ARI 760 and be suitable for continuous duty with applied voltages 15 percent under and 5 percent over nominal rated voltage at maximum and minimum encountered pressure and temperature service conditions. Valves shall be direct-acting or pilot-operating type, packless, except that packed stem, seal capped, manual lifting provisions shall be furnished. Solenoid coils shall be moisture-proof, UL approved, totally encapsulated or encapsulated and metal jacketed as required. Valves shall have safe working pressure of 2760 kPa (400 psi) and a maximum operating pressure differential of at least 1375 kPa (200 psi) at 85 percent rated voltage. Valves shall have an operating pressure differential suitable for the refrigerant used.

2.26.7.4 Expansion Valves

Expansion valves conform to requirements of ARI 750. Valve shall be of the diaphragm and spring type with internal or external equalizers, and bulb and capillary tubing. Valve shall be provided with an external superheat adjustment along with a seal cap. Internal equalizers may be utilized where flowing refrigerant pressure drop between outlet of the valve and inlet to the evaporator coil is negligible and pressure drop across the evaporator is less than the pressure difference corresponding to 1 degrees C (2 degrees F) of saturated suction temperature at evaporator conditions.

Bulb charge shall be determined by the manufacturer for the application and such that liquid will remain in the bulb at all operating conditions. Gas limited liquid charged valves and other valve devices for limiting evaporator pressure shall not be used without a distributor or discharge tube or effective means to prevent loss of control when bulb becomes warmer than valve body. Pilot-operated valves shall have a characterized plug to provide required modulating control. A de-energized solenoid valve may be used in the pilot line to close the main valve in lieu of a solenoid valve in the main liquid line. An isolatable pressure gauge shall be provided in the pilot line, at the main valve. Automatic pressure reducing or constant pressure regulating expansion valves may be used only where indicated or for constant evaporator loads.

2.26.7.5 Safety Relief Valve

Valve shall be the two-way type. Single type valves shall be used only where indicated. Valve shall bear the ASME code symbol. Valve capacity shall be certified by the National Board of Boiler and Pressure Vessel Inspectors. Valve shall be of an automatically reseating design after activation.

2.26.7.6 Evaporator Pressure Regulators, Direct-Acting

Valve shall include a diaphragm/spring power assembly, external pressure adjustment with seal cap, and pressure gauge port. Valve shall maintain a constant inlet pressure by balancing inlet pressure on diaphragm against an adjustable spring load. Pressure drop at system design load shall not exceed the pressure difference corresponding to a 1 degrees C change in saturated refrigerant temperature at evaporator operating suction temperature. Spring shall be selected for indicated maximum allowable suction pressure range.

2.26.7.7 Refrigerant Access Valves

Refrigerant access valves and hose connections shall be in accordance with ARI ANSI/ARI 720.

2.26.8 Accessories

2.26.8.1 Filter Driers

Driers shall conform to ARI ANSI/ARI 710. Sizes 15 mm (5/8 inch) and larger shall be the full flow, replaceable core type. Sizes 12 mm (1/2 inch) and smaller shall be the sealed type. Cores shall be of suitable desiccant that will not plug, cake, dust, channel, or break down, and shall remove water, acid, and foreign material from the refrigerant. Filter driers shall be constructed so that none of the desiccant will pass into the refrigerant lines. Minimum bursting pressure shall be 10.3 MPa (1,500 psi).

2.26.8.2 Sight Glass and Liquid Level Indicator

a. Assembly and Components: Assembly shall be pressure- and temperature-rated and constructed of materials suitable for the service. Glass shall be borosilicate type. Ferrous components subject to condensation shall be electro-galvanized.

b. Gauge Glass: Gauge glass shall include top and bottom isolation valves fitted with automatic checks, and packing followers;

red-line or green-line gauge glass; elastomer or polymer packing to suit the service; and gauge glass guard.

c. Bull's-Eye and Inline Sight Glass Reflex Lens: Bull's-eye and inline sight glass reflex lens shall be provided for dead-end liquid service. For pipe line mounting, two plain lenses in one body suitable for backlighted viewing shall be provided.

d. Moisture Indicator: Indicator shall be a self-reversible action, moisture reactive, color changing media. Indicator shall be furnished with full-color-printing tag containing color, moisture and temperature criteria. Unless otherwise indicated, the moisture indicator shall be an integral part of each corresponding sight glass.

2.26.8.3 Vibration Dampeners

Dampeners shall be of the all-metallic bellows and woven-wire type.

2.26.8.4 Flexible Pipe Connectors

Connector shall be pressure and temperature rated for the service in accordance with ASHRAE 15 and ASME B31.5. Connector shall be a composite of interior corrugated phosphor bronze or Type 300 Series Stainless steel, as required for fluid service, with exterior reinforcement of bronze, stainless steel or monel wire braid. Assembly shall be constructed with a safety factor of not less than 4 at 150 degrees C (300 degrees F). Unless otherwise indicated, the length of a flexible connector shall be as recommended by the manufacturer for the service intended.

2.26.8.5 Strainers

Strainers used in refrigerant service shall have brass or cast iron body, Y-or angle-pattern, cleanable, not less than 60-mesh noncorroding screen of an area to provide net free area not less than ten times the pipe diameter with pressure rating compatible with the refrigerant service. Screens shall be stainless steel or monel and reinforced spring-loaded where necessary for bypass-proof construction.

2.26.8.6 Brazing Materials

Brazing materials for refrigerant piping shall be in accordance with AWS A5.8, Classification BCuP-5.

2.27 DRAIN AND MISCELLANEOUS PIPING

Piping, fittings, valves and accessories for drain and miscellaneous services shall be in accordance with Section 15400 PLUMBING, GENERAL PURPOSE.

2.28 FABRICATION

2.28.1 Factory Coating

Unless otherwise specified, equipment and component items, when fabricated from ferrous metal, shall be factory finished with the manufacturer's standard finish, except that items located outside of buildings shall have weather resistant finishes that will withstand 125 hours exposure to the salt spray test specified in ASTM B 117 using a 25 percent sodium chloride

solution. Immediately after completion of the test, the specimen shall show no signs of blistering, wrinkling, cracking, or loss of adhesion and no sign of rust creepage beyond 3 mm on either side of the scratch mark. Cut edges of galvanized surfaces where hot-dip galvanized sheet steel is used shall be coated with a zinc-rich coating conforming to ASTM D 520, Type I.

2.28.2 Field Painting

Painting required for surfaces not otherwise specified, and finish painting of items only primed at the factory are specified in Section 09900PAINTING, GENERAL.

2.28.2.1 Color Coding

Color coding for piping identification is specified in Section 09900 PAINTING, GENERAL.

2.28.2.2 Color Coding Scheme

A color coding scheme for locating hidden piping shall be in accordance with Section 15400 PLUMBING, GENERAL PURPOSE.

PART 3 EXECUTION

3.1 INSTALLATION

Work shall be performed in accordance with the manufacturer's published diagrams, recommendations, and equipment warranty requirements. Where equipment is specified to conform to the requirements of ASME BPV VIII Div 1 and ASME BPV IX, the design, fabrication, and installation of the system shall conform to ASME BPV VIII Div 1 and ASME BPV IX.

3.1.1 Equipment

Refrigeration equipment and the installation thereof shall conform to ASHRAE 15. Necessary supports shall be provided for all equipment, appurtenances, and pipe as required, including frames or supports for compressors, pumps, cooling towers, condensers, and similar items. Compressors shall be isolated from the building structure. If mechanical vibration isolators are not provided, vibration absorbing foundations shall be provided. Each foundation shall include isolation units consisting of machine and floor or foundation fastenings, together with intermediate isolation material. Other floor-mounted equipment shall be set on not less than a 150 mm concrete pad doweled in place. Concrete foundations for floor mounted pumps shall have a mass equivalent to three times the weight of the components, pump, base plate, and motor to be supported. In lieu of concrete pad foundation, concrete pedestal block with isolators placed between the pedestal block and the floor may be provided. Concrete pedestal block shall be of mass not less than three times the combined pump, motor, and base weights. Isolators shall be selected and sized based on load-bearing requirements and the lowest frequency of vibration to be isolated. Lines connected to pumps mounted on pedestal blocks shall be provided with flexible connectors. Foundation drawings, bolt-setting information, and foundation bolts shall be furnished prior to concrete foundation construction for all equipment indicated or required to have concrete foundations. Concrete for foundations shall be as specified in Section 03300 CAST-IN-PLACE STRUCTURAL CONCRETE. Equipment shall be properly leveled, aligned, and secured in place in accordance with

manufacturer's instructions.

3.1.2 Mechanical Room Ventilation

Mechanical rooms containing refrigeration components or equipment shall be ventilated to the outdoors as indicated. Refrigerant relief device vent piping which is not returned to the system shall be routed to the atmosphere as indicated. Relief piping shall be supported independently of relief device and braced against reaction forces. The ventilation system shall be in accordance with Section 15895 AIR SUPPLY, DISTRIBUTION, VENTILATION, AND EXHAUST SYSTEM.

3.1.3 Building Surface Penetrations

Sleeves in nonload bearing surfaces shall be galvanized sheet metal, conforming to ASTM A 653/A 653M, Coating Class G-90, 1.0 mm (20 gauge). Sleeves in load bearing surfaces shall be uncoated carbon steel pipe, conforming to ASTM A 53, Standard weight. Sealants shall be applied to moisture and oil-free surfaces and elastomers to not less than 13 mm depth. Sleeves shall not be installed in structural members.

3.1.3.1 NOT USED

3.1.3.2 General Service Areas

Each sleeve shall extend through its respective wall, floor, or roof, and shall be cut flush with each surface. Pipes passing through concrete or masonry wall or concrete floors or roofs shall be provided with pipe sleeves fitted into place at the time of construction. Sleeves shall be of such size as to provide a minimum of 6.35 mm all-around clearance between bare pipe and sleeves or between jacketed-insulation and sleeves. Except in pipe chases or interior walls, the annular space between pipe and sleeve or between jacket over-insulation and sleeve shall be sealed in accordance with Section 07900 JOINT SEALING.

3.1.3.3 NOT USED

3.1.3.4 Fire-Rated Penetrations

Penetration of fire-rated walls, partitions, and floors shall be sealed as specified in Section 07840 FIRESTOPPING.

3.1.3.5 Escutcheons

Finished surfaces where exposed piping, bare or insulated, pass through floors, walls, or ceilings, except in boiler, utility, or equipment rooms, shall be provided with escutcheons. Where sleeves project slightly from floors, special deep-type escutcheons shall be used. Escutcheon shall be secured to pipe or pipe covering.

3.1.4 Access Panels

Access panels shall be provided for all concealed valves vents, controls, and items requiring inspection or maintenance. Access panels shall be of sufficient size and located so that the concealed items may be serviced and maintained or completely removed and replaced. Access panels shall be as specified in Section 05500 MISCELLANEOUS METALS.

3.1.5 NOT USED

3.1.6 NOT USED

3.1.7 Refrigeration Piping

Unless otherwise specified, pipe and fittings installation shall conform to requirements of ASME B31.5. Pipe shall be cut accurately to measurement established at the jobsite and worked into place without springing or forcing. Cutting or otherwise weakening of the building structure to facilitate piping installation will not be permitted without written approval. Pipes shall be cut square, shall have burrs removed by reaming, and shall be installed in a manner to permit free expansion and contraction without damage to joints or hangers. Filings, dust, or dirt shall be wiped from interior of pipe before connections are made.

3.1.7.1 Directional Changes

Changes in direction shall be made with fittings, except that bending of pipe 100 mm (4 inches) and smaller will be permitted, provided a pipe bender is used and wide-sweep bends are formed. The centerline radius of bends shall not be less than 6 diameters of the pipe. Bent pipe showing kinks, wrinkles, or other malformations will not be accepted.

3.1.7.2 Functional Requirements

Piping shall be installed 4 mm per meter of pipe in the direction of flow to ensure adequate oil drainage. Open ends of refrigerant lines or equipment shall be properly capped or plugged during installation to keep moisture, dirt, or other foreign material out of the system. Piping shall remain capped until installation. Equipment piping shall be in accordance with the equipment manufacturer's recommendations and the contract drawings.

3.1.7.3 Manual Valves

Stop valves shall be installed on each side of each piece of equipment such as compressors, condensers, evaporators, receivers, and other similar items in multiple-unit installation, to provide partial system isolation as required for maintenance or repair. Angle and globe valves shall be installed with stems horizontal unless otherwise indicated. Ball valves shall be installed with stems positioned to facilitate operation and maintenance. Isolating valves for pressure gauges and switches shall be external to thermal insulation. Safety switches shall not be fitted with isolation valves. Thermal wells for insertion thermometers and thermostats shall extend beyond thermal insulation surface not less than 25 mm. Filter dryers having access ports may be considered a point of isolation. Purge valves shall be provided at all points of systems where accumulated noncondensible gases would prevent proper system operation. Valves shall be furnished to match line size, unless otherwise indicated or approved.

3.1.7.4 Expansion Valves

Expansion valves shall be installed with the thermostatic expansion valve bulb located on top of the suction line when the suction line is less than 54 mm (2-1/8 inches) in diameter and at the 4 o'clock or 8 o'clock position on lines larger than 54 mm (2-1/8 inches). The bulb shall be securely fastened with two clamps. The bulb shall be insulated. The bulb shall installed in a horizontal portion of the suction line, if possible, with the pigtail on the bottom. If the bulb must be installed in a vertical line, the bulb tubing shall be facing up.

3.1.7.5 Valve Identification

Each system valve, including those which are part of a factory assembly, shall be tagged. Tags shall be in alphanumeric sequence, progressing in direction of fluid flow. Tags shall be embossed, engraved, or stamped plastic or nonferrous metal of various shapes, sized approximately 34 mm (1-3/8 inch) diameter, or equivalent dimension, substantially attached to a component or immediately adjacent thereto. Tags shall be attached with nonferrous, heavy duty, bead or link chain, 14 gauge annealed wire, nylon cable bands or as approved. Tag numbers shall be referenced in Operation and Maintenance Manuals and system diagrams.

3.1.7.6 Vibration Dampers

Vibration damper shall be provided in the suction and discharge lines on spring mounted compressors. Vibration dampers shall be installed parallel with the shaft of the compressor and be anchored firmly at the upstream end on the suction line and the downstream end in the discharge line.

3.1.7.7 Strainers

Strainers shall be provided immediately ahead of solenoid valves and expansion devices and where indicated. Strainers may be an integral part of the expansion valve.

3.1.7.8 Filter Dryer

A liquid line filter dryer shall be provided on each refrigerant circuit located such that all liquid refrigerant passes through a filter dryer. Dryers shall be sized in accordance with the manufacturers recommendations. A dryer shall be installed such that it can be isolated from the system, the isolated portion of the system evacuated, and the filter dryer replaced. Dryers shall be installed in the horizontal position except replaceable core filter dryers may be installed in the vertical position with the access flange on the bottom.

3.1.7.9 Sight Glass

A moisture indicating sight glass shall be installed in all refrigerant circuits down stream of filter dryers and where indicated. Sight glass shall be full line size.

3.1.7.10 Flexible Connectors

Flexible metallic connectors shall be installed perpendicular to line of motion being isolated. Piping for equipment with bidirectional motion shall be fitted with two flexible connectors, in perpendicular planes. Reinforced elastomer flexible connectors shall be installed in accordance with manufacturer's instructions. Piping guides and restraints related to flexible connectors shall be provided as required.

3.1.8 Thermometers

Thermometers located within 1.5 m of floor may be rigid stem type. Where thermal well is located above 1.5 m above floor, thermometer shall be universal adjustable angle type or remote element type to 2.1 m above floor and remote element type where thermal well is 2.1 m or more above floor. Thermometers shall be located in coolant supply and return or waste lines

at each heat exchanger, at each automatic temperature control device without an integral thermometer, refrigerant liquid line leaving receiver, refrigerant suction line at each evaporator or liquid cooler, and where indicated or required for proper operation of equipment.

3.1.9 Piping Supports

Refrigerant pipe supports shall be in accordance with ASME B31.5. Hangers used to support piping 50 mm (2 inches) and larger shall be fabricated to permit adequate adjustment after erection while still supporting the load. Pipe guides and anchors shall be installed to keep pipes in accurate alignment, to direct the expansion movement, and to prevent buckling, swaying, and undue strain. Piping subjected to vertical movement, when operating temperatures exceed ambient temperatures, shall be supported by variable spring hangers and supports or by constant support hangers.

3.1.9.1 Seismic Requirements

Piping and attached valves shall be supported and braced to resist seismic loads as specified under Section 13080 SEISMIC PROTECTION FOR MECHANICAL, ELECTRICAL EQUIPMENT. Structural steel required for reinforcement to properly support piping, headers, and equipment but not shown shall be provided under this section. Material used for support shall be as specified under Section 05210 STRUCTURAL STEEL.

3.1.9.2 Structural Attachments

Attachment to building structure concrete and masonry shall be by cast-in concrete inserts, built-in anchors, or masonry anchor devices. Inserts and anchors shall be applied with a safety factor not less than 5. Supports shall not be attached to metal decking. Masonry anchors for overhead applications shall be constructed of ferrous materials only. Material used for support shall be as specified under Section 05210 STRUCTURAL STEEL.

3.1.10 Pipe Hangers, Inserts, and Supports

Pipe hangers, inserts, and supports shall conform to MSS SP-58 and MSS SP-69, except as modified herein. Pipe hanger types 5, 12, and 26 shall not be used.

3.1.10.1 Hangers

Type 3 shall not be used on insulated piping. Type 24 may be used only on trapeze hanger systems or on fabricated frames.

3.1.10.2 Inserts

Type 18 inserts shall be secured to concrete forms before concrete is placed. Continuous inserts which allow more adjustments may be used if they otherwise meet the requirements for Type 18 inserts.

3.1.10.3 C-Clamps

Type 19 and 23 C-clamps shall be torqued per MSS SP-69 and have both locknuts and retaining devices, furnished by the manufacturer. Field-fabricated C-clamp bodies or retaining devices are not acceptable.

3.1.10.4 Angle Attachments

Type 20 attachments used on angles and channels shall be furnished with an added malleable-iron heel plate or adapter.

3.1.10.5 Saddles and Shields

Where Type 39 saddle or Type 40 shield are permitted for a particular pipe attachment application, the Type 39 saddle, connected to the pipe, shall be used on all pipe 100 mm (4 inches) and larger when the temperature of the medium is 16 degrees C or higher. Type 40 shields shall be used on all piping less than 100 mm (4 inches) and all piping 100 mm (4 inches) and larger carrying medium less than 16 degrees C. A high density insulation insert of cellular glass shall be used under the Type 40 shield for piping 50 mm (2 inches) and larger.

3.1.10.6 Horizontal Pipe Supports

Horizontal pipe supports shall be spaced as specified in MSS SP-69 and a support shall be installed not over 300 mm from the pipe fitting joint at each change in direction of the piping. Pipe supports shall be spaced not over 1.5 m apart at valves.

3.1.10.7 Vertical Pipe Supports

Vertical pipe shall be supported at each floor, except at slab-on-grade, and at intervals of not more than 4.5 m, not more than 2.4 m from end of risers, and at vent terminations.

3.1.10.8 Pipe Guides

Type 35 guides using, steel, reinforced polytetrafluoroethylene (PTFE) or graphite slides shall be provided where required to allow longitudinal pipe movement. Lateral restraints shall be provided as required. Slide materials shall be suitable for the system operating temperatures, atmospheric conditions, and bearing loads encountered.

3.1.10.9 Steel Slides

Where steel slides do not require provisions for restraint of lateral movement, an alternate guide method may be used. On piping 100 mm (4 inches) and larger, a Type 39 saddle shall be used. On piping under 100 mm (4 inches), a Type 40 protection shield may be attached to the pipe or insulation and freely rest on a steel slide plate.

3.1.10.10 High Temperature Guides with Cradles

Where there are high system temperatures and welding to piping is not desirable, then the Type 35 guide shall include a pipe cradle, welded to the guide structure and strapped securely to the pipe. The pipe shall be separated from the slide material by at least 100 mm, or by an amount adequate for the insulation, whichever is greater.

3.1.10.11 Multiple Pipe Runs

In the support of multiple pipe runs on a common base member, a clip or clamp shall be used where each pipe crosses the base support member. Spacing of the base support members shall not exceed the hanger and support spacing required for an individual pipe in the multiple pipe run.

3.1.11 Pipe Alignment Guides

Pipe alignment guides shall be provided where indicated for expansion loops, offsets, and bends and as recommended by the manufacturer for expansion joints, not to exceed 1.5 m on each side of each expansion joint, and in lines 100 mm (4 inches) or smaller not more than 2 feet on each side of the joint.

3.1.12 Pipe Anchors

Anchors shall be provided wherever necessary or indicated to localize expansion or to prevent undue strain on piping. Anchors shall consist of heavy steel collars with lugs and bolts for clamping and attaching anchor braces, unless otherwise indicated. Anchor braces shall be installed in the most effective manner to secure the desired results using turnbuckles where required. Supports, anchors, or stays shall not be attached where they will injure the structure or adjacent construction during installation or by the weight of expansion of the pipeline. Where pipe and conduit penetrations of vapor barrier sealed surfaces occur, these items shall be anchored immediately adjacent to each penetrated surface, to provide essentially zero movement within penetration seal. Detailed drawings of pipe anchors shall be submitted for approval before installation.

3.1.13 Piping Identification

Each piping system and direction of fluid flow shall be identified in accordance with applicable provisions of ANSI A13.1 with color coded, water, moisture and broad-spectrum temperature resistant, plastic labels.

3.1.14 Ductwork

Ductwork shall be as specified in Section 15895, AIR SUPPLY, DISTIBUTION, VENTILATION, AND EXHAUST SYSTEM.

3.1.15 NOT USED

3.1.16 NOT USED

3.1.17 Field Applied Insulation

Field applied insulation shall be as specified in Section 15080 THERMAL INSULATION FOR MECHANICAL SYSTEMS.

3.1.18 Factory Applied Insulation

Refrigerant suction lines between an evaporator and compressors and any cold gas inlet connections to gas cooled motors shall be insulated with not less than 19 mm (3/4 inch) thick unicellular plastic foam.

3.1.19 Framed Instructions

Framed instructions shall be framed under glass or laminated plastic and be posted where directed. Instructions shall include equipment layout, wiring and control diagrams, piping, valves and control sequences, and typed condensed operation instructions. The condensed operation instructions shall include preventative maintenance procedures, methods of checking the system for normal and safe operation, and procedures for safely starting and stopping the system. The instructions shall be posted before acceptance testing of the system.

3.2 TESTS

Tests shall be conducted in the presence of the Contracting Officer. Utilities for testing shall be provided as specified in the SPECIAL CONTRACT REQUIREMENTS. Water and electricity required for the tests will be furnished by the Government. Any material, equipment, instruments, and personnel required for the test shall be provided by the Contractor. The services of a qualified technician shall be provided as required to perform all tests and procedures indicated herein. Field tests shall be coordinated with Section 15990 TESTING, ADJUSTING, AND BALANCING OF HVAC SYSTEMS.

3.2.1 NOT USED

3.2.2 Refrigerant System

After all components of the refrigerant system have been installed and connected, the entire refrigeration system shall be subjected to a pneumatic test as described herein.

3.2.2.1 Preliminary Procedures

Prior to pneumatic testing, equipment which has been factory tested and refrigerant charged as well as equipment which could be damaged or cause personnel injury by imposed test pressure, positive or negative, shall be isolated from the test pressure or removed from the system. Safety relief valves and rupture discs, where not part of factory sealed systems, shall be removed and openings capped or plugged.

3.2.2.2 Pneumatic Test

Pressure control and excess pressure protection shall be provided at the source of test pressure. Valves shall be wide open, except those leading to the atmosphere. Test gas shall be dry nitrogen, with minus 55 degrees C (minus 70 degree F) dewpoint and less than 5 ppm oil. Test pressure shall be applied in two stages before any refrigerant pipe is insulated or covered. First stage test shall be at 69 kPa (10 psi) with every joint being tested with a thick soap or color indicating solution. Second stage tests shall raise the system to the minimum refrigerant leakage test pressure specified in ASHRAE 15 with a maximum test pressure 25 percent greater. Pressure above 690 KPa (100 psig) shall be raised in 10 percent increments with a pressure acclimatizing period between increments. The initial test pressure shall be recorded along with the ambient temperature to which the system is exposed. Final test pressures of the second stage shall be maintained on the system for a minimum of 24 hours. At the end of the 24 hour period, the system pressure will be recorded along with the ambient temperature to which the system is exposed. A correction factor of 2 kPa (0.3 psi) will be allowed for each degree C (F) change between test space initial and final ambient temperature, plus for increase and minus for a decrease. If the corrected system pressure is not exactly equal to the initial system test pressure, then the system shall be investigated for leaking joints. To repair leaks, the joint shall be taken apart, thoroughly cleaned, and reconstructed as a new joint. Joints repaired by caulking, remelting, or back-welding/brazing shall not be acceptable. Following repair, the entire system shall be retested using the pneumatic tests described above. The entire system shall be reassemblied once the pneumatic tests are satisfactorily completed.

3.2.2.3 Evacuation Test

Following satisfactory completion of the pneumatic tests, the pressure shall be relieved and the entire system shall be evacuated to an absolute pressure of 300 micrometers. During evacuation of the system, the ambient temperature shall be higher than 2 degrees C. No more than one system shall be evacuated at one time by one vacuum pump. Once the desired vacuum has been reached, the vacuum line shall be closed and the system shall stand for 1 hour. If the pressure rises over 500 micrometers after the 1 hour period, then the system shall be evacuated again down to 300 micrometers and let set for another 1 hour period. The system shall not be charged until a vacuum of at least 500 micrometers is maintained for a period of 1 hour without the assistance of a vacuum line. If during the testing the pressure continues to rise, check the system for leaks, repair as required, and repeat the evacuation procedure. During evacuation, pressures shall be recorded by a thermocouple-type, electronic-type, or a calibrated-micrometer type gauge.

3.2.2.4 System Charging and Startup Test

Following satisfactory completion of the evacuation tests, the system shall be charged with the required amount of refrigerant by raising pressure to normal operating pressure and in accordance with manufacturer's procedures. Following charging, the system shall operate with high-side and low-side pressures and corresponding refrigerant temperatures, at design or improved values. The entire system shall be tested for leaks. Fluorocarbon systems shall be tested with halide torch or electronic leak detectors.

3.2.2.5 Refrigerant Leakage

If a refrigerant leak is discovered after the system has been charged, the leaking portion of the system shall immediately be isolated from the remainder of the system and the refrigerant pumped into the system receiver or other suitable container. Under no circumstances shall the refrigerant be discharged into the atmosphere.

3.2.2.6 Contractor's Responsibility

The Contractor shall, at all times during the installation and testing of the refrigeration system, take steps to prevent the release of refrigerants into the atmosphere. The steps shall include, but not be limited to, procedures which will minimize the release of refrigerants to the atmosphere and the use of refrigerant recovery devices to remove refrigerant from the system and store the refrigerant for reuse or reclaim. At no time shall more than 85 g (3 ounces) of refrigerant be released to the atmosphere in any one occurrence. Any system leaks within the first year shall be repaired in accordance with the requirements herein at no cost to the Government including material, labor, and refrigerant if the leak is the result of defective equipment, material, or installation.

3.2.3 Ductwork Leak Tests

Ductwork leak test shall be performed for the entire air distribution system, including fans, coils, filters, etc., designated as static pressure Class 750 Pa (3 inch water gauge) through Class 2500 Pa (10 inch water gauge). Test procedure, apparatus, and report shall conform to SMACNA-10. The maximum allowable leakage rate is 189 L/s (400 CFM). Ductwork leak test shall be completed with satisfactory results prior to applying insulation to ductwork exterior.

3.2.4 NOT USED

3.2.5 NOT USED

3.2.6 System Performance Tests

After the foregoing tests have been completed and before each refrigeration system is accepted, tests to demonstrate the general operating characteristics of all equipment shall be conducted by a registered professional engineer or an approved manufacturer's start-up representative experienced in system start-up and testing, at such times as directed. Tests shall cover a period of not less than 48 hours for each system and demonstrate that the entire system is functioning in accordance with the drawings and specifications. Corrections and adjustments shall be made as necessary and tests shall be re-conducted to demonstrate that the entire system is functioning as specified. Prior to acceptance, service valve seal caps and blanks over gauge points shall be installed and tightened. Any refrigerant lost during the system startup shall be replaced. If tests do not demonstrate satisfactory system performance, deficiencies shall be corrected and the system shall be retested.

3.3 INSPECTIONS

At the conclusion of the one year period, cooling towers and condensers shall be inspected for problems due to corrosion, scale, and biological growth. If the cooling tower and condenser are found not to conform to the manufacturers recommended conditions, assuming the water treatment company recommendations have been followed; the water treatment company shall provide all chemicals and labor for cleaning or repairing the equipment as required by the manufacturer's recommendations.

3.4 CLEANING AND ADJUSTING

3.4.1 Piping

Prior to testing, pipes shall be cleaned free of scale and thoroughly flushed of all foreign matter. A temporary bypass shall be provided for water coils to prevent flushing water from passing through coils. Strainers and valves shall be thoroughly cleaned. Prior to testing and balancing, air shall be removed from each water system through the use of the air vents. Temporary measures, such as piping the overflow from vents to a collecting vessel shall be taken to avoid water damage during the venting process. Air vents shall be plugged or capped after the system has been vented.

3.4.2 Ductwork

Prior to testing, inside of ducts, plenums, and casing shall be thoroughly cleaned of all debris and blown free of small particles of rubbish and dust and then vacuum cleaned before installing outlet faces. Temporary filters shall be provided for fans that are operated during construction. New filters shall be installed after all construction dirt has been removed from the building and the ducts, plenum, casings, and other items specified have been vacuum cleaned. Fans shall be adjusted to the speed indicated by the manufacturer to meet specified conditions.

3.4.3 Equipment

Equipment shall be wiped clean, with all traces of oil, dust, dirt, or

paint spots removed. System shall be maintained in this clean condition until final acceptance. Bearings shall be lubricated with oil or grease as recommended by the manufacturer. Belts shall be tightened to proper tension. Control valves and other miscellaneous equipment requiring adjustment shall be adjusted to setting indicated or directed.

3.4.4 Testing, Adjusting, and Balancing

Testing, adjusting, and balancing shall be as specified in Section 15990 TESTING, ADJUSTING AND BALANCING OF HVAC SYSTEMS.

3.5 DEMONSTRATIONS

Contractor shall conduct a training course for the operating staff as designated by the Contracting Officer. The training period shall consist of a total 24 hours of normal working time and start after the system is functionally completed but prior to final acceptance tests. The field instructions shall cover all of the items contained in the approved operation and maintenance manuals as well as demonstrations of routine maintenance operations.

-- End of Section --

SECTION 15895

AIR SUPPLY, DISTRIBUTION, VENTILATION, AND EXHAUST SYSTEM

PART 1 GENERAL

1.1 REFERENCES

The publications listed below form a part of this specification to the extent referenced. The publications are referred to in the text by basic designation only.

AIR CONDITIONING AND REFRIGERATION INSTITUTE (ARI)

ARI Guideline D	(1987) Application and Installation of Central Station Air-Handling Units

AIR MOVEMENT AND CONTROL ASSOCIATION (AMCA)

AMCA 210	(1985) Laboratory Methods of Testing Fans for Rating
AMCA 300	(1996) Reverberant Room Method for Sound Testing of Fans

AMERICAN BEARING MANUFACTURERS ASSOCIATION (ABEMA)

ABEMA 9	(1990) Load Ratings and Fatigue Life for Ball Bearings
ABEMA 11	(1990) Load Ratings and Fatigue Life for Roller Bearings

AMERICAN SOCIETY FOR TESTING AND MATERIALS (ASTM)

ASTM A 53	(1993a) Pipe, Steel, Black and Hot-Dipped, Zinc-Coated Welded and Seamless
ASTM C 1071	(1991) Thermal and Acoustical Insulation (Glass Fiber, Duct Lining Material)
ASTM E 437	(1992) Industrial Wire Cloth and Screens (Square Opening Series)

AMERICAN SOCIETY OF HEATING, REFRIGERATING AND AIR-CONDITIONING ENGINEERS (ASHRAE)

ASHRAE 52.1	(1992) Gravimetric and Dust-Spot Procedures for Testing Air-Cleaning Devices Used in General Ventilation for Removing Particulate Matter
ASHRAE 70	(1991) Method of Testing Rating the Performance of Air Outlets and Inlets

NATIONAL ELECTRICAL MANUFACTURERS ASSOCIATION (NEMA)

NEMA MG 1	(1993; Rev 1; Rev 2) Motors and Generators

NATIONAL FIRE PROTECTION ASSOCIATION (NFPA)

NFPA 90A	(1993) Installation of Air Conditioning and Ventilating Systems

SHEET METAL AND AIR CONDITIONING CONTRACTORS' NATIONAL ASSOCIATION (SMACNA)

SMACNA-06	(1995) HVAC Duct Construction Standards - Metal and Flexible

UNDERWRITERS LABORATORIES (UL)

UL-01	(1996; Supple) Building Materials Directory
UL-03	(1996; Supple) Electrical Construction Materials Directory
UL 181	(1996; Rev Oct 1996) Factory-Made Air Ducts and Air Connectors
UL 214	(1993) Tests for Flame-Propagation of Fabrics and Films
UL 586	(1996) High-Efficiency, Particulate, Air Filter Units
UL 705	(1994; Rev thru Mar 1996) Power Ventilators
UL 900	(1994) Test Performance of Air Filter Units

1.2 COORDINATION OF TRADES Ductwork, piping offsets, fittings, and accessories shall be furnished as required to provide a complete installation and to eliminate interference with other construction.

1.3 DELIVERY AND STORAGE

Equipment delivered and placed in storage shall be stored with protection from the weather, humidity and temperature variations, dirt and dust, or other contaminants.

1.4 SUBMITTALS

Government approval is required for submittals with a "GA" designation; submittals having an "FIO" designation are for information only. The following shall be submitted in accordance with Section 01330 SUBMITTAL PROCEDURES:

SD-01 Data

Components and Equipment Data; GA.

Manufacturer's catalog data shall be included with the detail drawings for the following items. The data shall be highlighted to show model, size, options, etc., that are intended for consideration. Data shall be adequate to demonstrate compliance with contract requirements for the following:

a. Piping Components

b. Ductwork Components

c. Air Systems Equipment

d. Air Handling Units

e. Energy Recovery Devices

f. Terminal Units

SD-04 Drawings

Air Supply, Distribution, Ventilation, and Exhaust Equipment; GA.

Drawings shall consist of equipment layout including assembly and installation details and electrical connection diagrams; ductwork layout showing the location of all supports and hangers, typical hanger details, gauge reinforcement, reinforcement spacing rigidity classification, and static pressure and seal classifications; and piping layout showing the location of all guides and anchors, the load imposed on each support or anchor, and typical support details. Drawings shall include any information required to demonstrate that the system has been coordinated and will properly function as a unit and shall show equipment relationship to other parts of the work, including clearances required for operation and maintenance.

SD-06 Instructions

Test Procedures; GA.

Proposed test procedures for piping hydrostatic test, ductwork leak test, and performance tests of systems, at least 2 weeks prior to the start of related testing.

Welding Procedures; GA.

A copy of qualified welding procedures, at least 2 weeks prior to the start of welding operations.

System Diagrams; GA.

Proposed diagrams, at least 2 weeks prior to start of related testing. System diagrams that show the layout of equipment, piping, and ductwork, and typed condensed operation manuals explaining preventative maintenance procedures, methods of checking the system for normal, safe operation, and procedures for safely starting and stopping the system shall be framed under glass or laminated plastic. After approval, these items shall be posted where directed.

SD-07 Schedules

Test Schedules; GA.

Proposed test schedules for hydrostatic test of piping, ductwork leak test, and performance tests, at least 2 weeks prior to the start of related testing.

Field Training Schedule; GA.

Proposed schedule for field training, at least 2 weeks prior to the start of related training.

SD-08 Statements

Similar Services; GA.

Statement demonstrating successful completion of similar services on at least 5 projects of similar size and scope, at least 2 weeks prior to submittal of other items required by this section.

Welding Qualification; GA.

A list of names and identification symbols of qualified welders and welding operators, at least 2 weeks prior to the start of welding operations.

SD-09 Reports

Test Reports; GA.

Test reports for the piping hydrostatic test, ductwork leak test, and performance tests in booklet form, upon completion of testing. Reports shall document phases of tests performed including initial test summary, repairs/adjustments made, and final test results.

SD-13 Certificates

Bolts; GA.

Written certification from the bolt manufacturer that the bolts furnished comply with the requirements of this specification. The certification shall include illustrations of product markings, and the number of each type of bolt to be furnished.

SD-19 Operation and Maintenance Manuals

Air Supply, Distribution, Ventilation, and Exhaust Manuals; GA.

Six manuals listing step-by-step procedures required for system startup, operation, shutdown, and routine maintenance, at least 2 weeks prior to field training. The manuals shall include the manufacturer's name, model number, parts list, list of parts and tools that should be kept in stock by the owner for routine maintenance including the name of a local supplier, simplified wiring and controls diagrams, troubleshooting guide, and recommended service organization (including address and telephone number) for each item of equipment. Each service organization submitted shall be capable of providing 4 hour onsite response to a service call on an emergency basis.

PART 2 PRODUCTS

2.1 STANDARD PRODUCTS

Components and equipment shall be standard products of a manufacturer regularly engaged in the manufacturing of products that are of a similar material, design and workmanship. The standard products shall have been in

satisfactory commercial or industrial use for 2 years before bid opening. The 2-year experience shall include applications of components and equipment under similar circumstances and of similar size. The 2 years must be satisfactorily completed by a product which has been sold or is offered for sale on the commercial market through advertisements, manufacturers' catalogs, or brochures. Products having less than a 2-year field service record will be acceptable if a certified record of satisfactory field operation, for not less than 6000 hours exclusive of the manufacturer's factory tests, can be shown. The equipment items shall be supported by a service organization.

2.2 ASBESTOS PROHIBITION

Asbestos and asbestos-containing products shall not be used.

2.3 NAMEPLATES

Equipment shall have a nameplate that identifies the manufacturer's name, address, type or style, model or serial number, and catalog number.

2.4 EQUIPMENT GUARDS AND ACCESS

Belts, pulleys, chains, gears, couplings, projecting setscrews, keys, and other rotating parts exposed to personnel contact shall be fully enclosed or guarded according to OSHA requirements. High temperature equipment and piping exposed to contact by personnel or where it creates a potential fire hazard shall be properly guarded or covered with insulation of a type specified.

2.5 NOT USED

2.6 ELECTRICAL WORK

Electrical motor-driven equipment specified shall be provided complete with motor, motor starter, and controls. Unless otherwise specified, electric equipment, including wiring and motor efficiencies, shall be according to Section 16415 ELECTRICAL WORK, INTERIOR. Electrical characteristics and enclosure type shall be as shown. Unless otherwise indicated, motors of 745 W and above shall be high efficiency type. Motor starters shall be provided complete with thermal overload protection and other appurtenances necessary. Each motor shall be according to NEMA MG 1 and shall be of sufficient size to drive the equipment at the specified capacity without exceeding the nameplate rating of the motor. Manual or automatic control and protective or signal devices required for the operation specified, and any control wiring required for controls and devices, but not shown, shall be provided. Where two-speed or variable-speed motors are indicated, solid-state variable-speed controller may be provided to accomplish the same function. Solid-state variable-speed controllers shall be utilized for motors rated 7.45 kW (10 hp) or less. Adjustable frequency drives shall be used for larger motors.

2.7 CONTROLS

Controls shall be provided as specified in Section 15951 DIRECT DIGITAL CONTROL FOR HVAC SYSTEMS.

2.8 DUCTWORK COMPONENTS

2.8.1 Metal Ductwork

All aspects of metal ductwork construction, including all fittings and components, shall comply with SMACNA-06 unless otherwise specified. Elbows shall be radius type with a centerline radius of 1-1/2 times the width or diameter of the duct where space permits. Otherwise, elbows having a minimum radius equal to the width or diameter of the duct or square elbows with factory fabricated turning vanes may be used. Static pressure Class 125, 250, and 500 Pa (1/2, 1, and 2 inch w.g.) ductwork shall meet the requirements of Seal Class C. Class 750 through 2500 Pa (3 through 10 inch) shall meet the requirements of Seal Class A. Sealants shall conform to fire hazard classification specified in Section 15080 THERMAL INSULATION FOR MECHANICAL SYSTEMS. Pressure sensitive tape shall not be used as a sealant. Spiral lock seam duct, and flat oval shall be made with duct sealant and locked with not less than 3 equally spaced drive screws or other approved methods indicated in SMACNA-06. The sealant shall be applied to the exposed male part of the fitting collar so that the sealer will be on the inside of the joint and fully protected by the metal of the duct fitting. One brush coat of the sealant shall be applied over the outside of the joint to at least 50 mm band width covering all screw heads and joint gap. Dents in the male portion of the slip fitting collar will not be acceptable. Outdoor air intake ducts and plenums shall be fabricated with watertight soldered or brazed joints and seams.

2.8.1.1 Transitions

Diverging air flow transitions shall be made with each side pitched out a maximum of 15 degrees, for an included angle of 30 degrees. Transitions for converging air flow shall be made with each side pitched in a maximum of 30 degrees, for an included angle of 60 degrees, or shall be as indicated. Factory-fabricated reducing fittings for systems using round duct sections when formed to the shape of the ASME short flow nozzle, need not comply with the maximum angles specified.

2.8.1.2 NOT USED

2.8.1.3 Insulated Nonmetallic Flexible Duct Runouts

Flexible duct runouts shall be used only where indicated. Runout length shall be as shown on the drawings, but shall in no case exceed 3 m. Runouts shall be preinsulated, factory fabricated, and shall comply with NFPA 90A and UL 181. Either field or factory applied vapor barrier shall be provided. Where coil induction or high velocity units are supplied with vertical air inlets, a streamlined and vaned and mitered elbow transition piece shall be provided for connection to the flexible duct or hose. The last elbow to these units, other than the vertical air inlet type, shall be a die-stamped elbow and not a flexible connector. Insulated flexible connectors may be used as runouts. The insulated material and vapor barrier shall conform to the requirements of Section 15080 THERMAL INSULATION FOR MECHANICAL SYSTEMS. The insulation material surface shall not be exposed to the air stream.

2.8.1.4 General Service Duct Connectors

A flexible duct connector approximately 150 mm in width shall be provided where sheet metal connections are made to fans or where ducts of dissimilar metals are connected. For round/oval ducts, the flexible material shall be secured by stainless steel or zinc-coated, iron clinch-type draw bands. For rectangular ducts, the flexible material locked to metal collars shall be installed using normal duct construction methods. The composite

connector system shall comply with UL 214 and be classified as "flame-retarded fabrics" in UL-01.

2.8.2 Aluminum Ductwork

Aluminum ductwork shall be provided for all exhaust systems serving areas where possible moisture carry over are possible, such as shower/locker rooms, or toilets with showers. Aluminum ductwork shall be in accordance with ASTM B209, aluminum sheet, alloy 3003-H14. Aluminum connectors and bar stock shall be Alloy 6061-T6 or of equivalent strength. All ductwork shall be in accordance with SMACNA HVAC Duct Construction Standards.

2.8.3 Ductwork Accessories

2.8.3.1 Duct Access Doors

Access doors shall be provided in ductwork and plenums where indicated and at all air flow measuring primaries, automatic dampers, fire dampers, coils, thermostats, and other apparatus requiring service and inspection in the duct system, and unless otherwise shown, shall conform to SMACNA-06. Access doors shall be provided upstream and downstream of air flow measuring primaries and heating and cooling coils. Doors shall be minimum 375 x 450 mm, unless otherwise shown. Where duct size will not accommodate this size door, the doors shall be made as large as practicable. Doors 600 x 600 mm or larger shall be provided with fasteners operable from both sides. Doors in insulated ducts shall be the insulated type.

2.8.3.2 NOT USED

2.8.3.3 Splitters and Manual Balancing Dampers

Splitters and manual balancing dampers shall be furnished with accessible operating mechanisms. Where operators occur in finished portions of the building, operators shall be chromium plated with all exposed edges rounded. Splitters shall be operated by quadrant operators or 5 mm (3/16 inch) rod brought through the side of the duct with locking setscrew and bushing. Two rods are required on splitters over 200 mm (8 inches). Manual volume control dampers shall be operated by locking-type quadrant operators. Dampers and splitters shall be 2 gauges heavier than the duct in which installed. Unless otherwise indicated, multileaf dampers shall be opposed blade type with maximum blade width of 300 mm. Access doors or panels shall be provided for all concealed damper operators and locking setscrews. Unless otherwise indicated, the locking-type quadrant operators for dampers, when installed on ducts to be thermally insulated, shall be provided with stand-off mounting brackets, bases, or adapters to provide clearance between the duct surface and the operator not less than the thickness of the insulation. Stand-off mounting items shall be integral with the operator or standard accessory of the damper manufacturer. Volume dampers shall be provided where indicated.

2.8.3.4 Air Deflectors and Branch Connections

Air deflectors shall be provided at duct mounted supply outlets, at takeoff or extension collars to supply outlets, at duct branch takeoff connections, and at 90 degree elbows, as well as at locations as indicated on the drawings or otherwise specified. Conical branch connections or 45 degree entry connections may be used in lieu of deflectors or extractors for branch connections. All air deflectors, except those installed in 90

degree elbows, shall be provided with an approved means of adjustment. Adjustment shall be made from easily accessible means inside the duct or from an adjustment with sturdy lock on the face of the duct. When installed on ducts to be thermally insulated, external adjustments shall be provided with stand-off mounting brackets, integral with the adjustment device, to provide clearance between the duct surface and the adjustment device not less than the thickness of the thermal insulation. Air deflectors shall be factory-fabricated units consisting of curved turning vanes or louver blades designed to provide uniform air distribution and change of direction with minimum turbulence or pressure loss. Air deflectors shall be factory or field assembled. Blade air deflectors, also called blade air extractors, shall be approved factory fabricated units consisting of equalizing grid and adjustable blade and lock. Adjustment shall be easily made from the face of the diffuser or by position adjustment and lock external to the duct. Stand-off brackets shall be provided on insulated ducts and are described herein. Fixed air deflectors, also called turning vanes, shall be provided in 90 degree elbows.

2.8.4 Duct Sleeves, Framed Prepared Openings, Closure Collars

2.8.4.1 Duct Sleeves

Duct sleeves shall be provided for round ducts 375 mm in diameter or less passing through floors, walls, ceilings, or roof, and installed during construction of the floor, wall, ceiling, or roof. Round ducts larger than 375 mm in diameter and square, rectangular, and oval ducts passing through floors, walls, ceilings, or roof shall be installed through framed prepared openings. The Contractor shall be responsible for the proper size and location of sleeves and prepared openings. Sleeves and framed openings are also required where grilles, registers, and diffusers are installed at the openings. Framed prepared openings shall be fabricated from 1.0 mm (20 gauge) galvanized steel, unless otherwise indicated. Where sleeves are installed in bearing walls or partitions, black steel pipe, ASTM A 53, Schedule 20 shall be used. Sleeve shall provide 25 mm clearance between the duct and the sleeve or 25 mm clearance between the insulation and the sleeve for insulated ducts.

2.8.4.2 Framed Prepared Openings

Openings shall have 25 mm clearance between the duct and the opening or 25 mm clearance between the insulation and the opening for insulated ducts.

2.8.4.3 Closure Collars

Collars shall be fabricated of galvanized sheet metal not less than 100 mm wide, unless otherwise indicated, and shall be installed on exposed ducts on each side of walls or floors where sleeves or prepared openings are provided. Collars shall be installed tight against surfaces. Collars shall fit snugly around the duct or insulation. Sharp edges of the collar around insulated duct shall be ground smooth to preclude tearing or puncturing the insulation covering or vapor barrier. Collars for round ducts 375 mm in diameter or less shall be fabricated from 1.0 mm (20 gauge) galvanized steel. Collars for round ducts larger than 375 mm and square, and rectangular ducts shall be fabricated from 1.3 mm (18 gauge) galvanized steel. Collars shall be installed with fasteners on maximum 150 mm centers, except that not less than 4 fasteners shall be used.

2.8.5 NOT USED

2.8.6 NOT USED

2.8.7 Diffusers, Registers, and Grilles

Units shall be factory-fabricated of steel, corrosion-resistant steel, or aluminum and shall distribute the specified quantity of air evenly over space intended without causing noticeable drafts, air movement faster than 0.25 m/s (50 fpm) in occupied zone, or dead spots anywhere in the conditioned area. Outlets for diffusion, spread, throw, and noise level shall be as required for specified performance. Performance shall be certified according to ASHRAE 70. Inlets and outlets shall be sound rated and certified according to ASHRAE 70. Sound power level shall be as indicated. Diffusers and registers shall be provided with volume damper with accessible operator, unless otherwise indicated; or if standard with the manufacturer, an automatically controlled device will be acceptable. Volume dampers shall be opposed blade type for all diffusers and registers, except linear slot diffusers. Linear slot diffusers shall be provided with round or elliptical balancing dampers. Where the inlet and outlet openings are located less than 2 m above the floor, they shall be protected by a grille or screen according to NFPA 90A.

2.8.7.1 Diffusers

Diffuser types shall be as indicated. Ceiling mounted units shall be furnished with anti-smudge devices, unless the diffuser unit minimizes ceiling smudging through design features. Diffusers shall be provided with air deflectors of the type indicated. Air handling troffers or combination light and ceiling diffusers shall conform to the requirements of UL-03for the interchangeable use as cooled or heated air supply diffusers or return air units. Ceiling mounted units shall be installed with rims tight against ceiling. Sponge rubber gaskets shall be provided between ceiling and surface mounted diffusers for air leakage control. Suitable trim shall be provided for flush mounted diffusers. Duct collar connecting the duct to diffuser shall be airtight and shall not interfere with volume controller. Return or exhaust units shall be similar to supply diffusers.

2.8.7.2 Registers and Grilles

Units shall be four-way directional-control type, except that return and exhaust registers may be fixed horizontal or vertical louver type similar in appearance to the supply register face. Registers shall be provided with sponge-rubber gasket between flanges and wall or ceiling. Wall supply registers shall be installed at least 150 mm below the ceiling unless otherwise indicated. Return and exhaust registers shall be located 150 mm above the floor unless otherwise indicated. Four-way directional control may be achieved by a grille face which can be rotated in 4 positions or by adjustment of horizontal and vertical vanes. Grilles shall be as specified for registers, without volume control damper.

2.8.8 Louvers

Louvers for installation in exterior walls which are associated with the air supply and distribution system shall be as specified in Section 07600 SHEET METALWORK, GENERAL.

2.8.9 Relief Air Vents

Relief air vents, shall be fabricated from aluminum sheets with aluminum

structural shapes. Sheet metal thickness, reinforcement, and fabrication shall conform to SMACNA-06. Louver blades shall be accurately fitted and secured to frames. Edges of louver blades shall be folded or beaded for rigidity and baffled to exclude driving rain. Relief air vents shall be provided with bird screen.

2.8.10 Bird Screens and Frames

Bird screens shall conform to ASTM E 437, Type I, Class 1, 2 by 2 mesh, 1.6 mm diameter aluminum wire or 0.8 mm inch diameter stainless steel wire. Frames shall be removable type or stainless steel or extruded aluminum.

2.9 AIR SYSTEMS EQUIPMENT

2.9.1 Fans

Fans shall be tested and rated according to AMCA 210. Fans may be connected to the motors either directly or indirectly with V-belt drive. V-belt drives shall be designed for not less than 150 percent of the connected driving capacity. Motor sheaves shall be variable pitch for 11 kW (15 hp) and below and fixed pitch as defined by ARI Guideline D. Variable pitch sheaves shall be selected to drive the fan at a speed which will produce the specified capacity when set at the approximate midpoint of the sheave adjustment. When fixed pitch sheaves are furnished, a replaceable sheave shall be provided when needed to achieve system air balance. Motors for V-belt drives shall be provided with adjustable rails or bases. Removable metal guards shall be provided for all exposed V-belt drives, and speed-test openings shall be provided at the center of all rotating shafts. Fans shall be provided with personnel screens or guards on both suction and supply ends, except that the screens need not be provided, unless otherwise indicated, where ducts are connected to the fan. Fan and motor assemblies shall be provided with vibration-isolation supports or mountings as indicated. Vibration-isolation units shall be standard products with published loading ratings. Each fan shall be selected to produce the capacity required at the fan static pressure indicated. Sound power level shall be as indicated. The sound power level values shall be obtained according to AMCA 300. Standard AMCA arrangement, rotation, and discharge shall be as indicated.

2.9.1.1 Centrifugal Fans

Centrifugal fans shall be fully enclosed, single-width single-inlet, or double-width double-inlet, AMCA Pressure Class I, II, or III as required or indicated for the design system pressure. Impeller wheels shall be rigidly constructed, accurately balanced both statically and dynamically. Fan blades may be forward curved, backward-inclined or airfoil design in wheel sizes up to 750 mm (30 inches). Fan blades for wheels over 750 mm (30 inches) in diameter shall be backward-inclined or airfoil design. Fan wheels 900 mm (36 inches) or less in diameter may have one or more extra long bearings between the fan wheel and the drive. Bearings shall be sleeve type, self-aligning and self-oiling with oil reservoirs, or precision self-aligning roller or ball-type with accessible grease fittings or permanently lubricated type. Grease fittings shall be connected to tubing and serviceable from a single accessible point. Bearing life shall be L50 rated at not less than 200,000 hours as defined by ABEMA Std 9 and ABEMA Std 11. Fan shafts shall be steel, accurately finished, and shall be provided with key seats and keys for impeller hubs and fan pulleys. Each fan outlet shall be of ample proportions and shall be designed for the attachment of angles and bolts for attaching flexible connections. Motors,

unless otherwise indicated, shall not exceed 1800 rpm and shall have dripproof enclosures. Motor starters shall be magnetic across-the-line type with general-purpose enclosure.

2.9.1.2 In-Line Centrifugal Fans

In-line fans shall have centrifugal backward inclined blades, stationary discharge conversion vanes, internal and external belt guards, and adjustable motor mounts. Fans shall be mounted in a welded tubular casing. Air shall enter and leave the fan axially. Inlets shall be streamlined with conversion vanes to eliminate turbulence and provide smooth discharge air flow. Fan bearings and drive shafts shall be enclosed and isolated from the air stream. Fan bearings shall be sealed against dust and dirt and shall be permanently lubricated, and shall be precision self aligning ball or roller type. Bearing life shall be L50 rated at not less than 200,000 hours as defined by ABEMA 9 and ABEMA 11. Motor starters shall be magnetic across-the-line with general-purpose enclosures. Remote manual switch with pilot indicating light shall be provided where indicated.

2.9.1.3 NOT USED

2.9.1.4 Panel Type Power Wall Ventilators

Fans shall be propeller type, assembled on a reinforced metal panel with venturi opening spun into panel. Fans with wheels less than 600 mm (24 inches) diameter shall be direct or V-belt driven and fans with wheels 600 mm (24 inches) diameter and larger shall be V-belt drive type. Fans shall be furnished with wall mounting collar. Lubricated bearings shall be provided. Fans shall be fitted with wheel and motor side metal or wire guards which have a corrosion-resistant finish. Motor enclosure shall be dripproof type. Gravity and motor operated backdraft dampers shall be provided where indicated.

2.9.1.5 NOT USED

2.9.1.6 Centrifugal Type Power Roof Ventilators

Fans shall be direct or V-belt driven with backward inclined, non-overloading wheel. Motor compartment housing shall be hinged or removable and weatherproof, constructed of heavy gauge aluminum. Fans shall be provided with birdscreen, disconnect switch, gravity dampers, sound curb, and roof curb. Motors enclosure shall be dripproof type. Grease-laden kitchen exhaust fans shall be centrifugal type according to UL 705 and fitted with V-belt drive, round hood, and windband upblast discharge configuration, integral residue trough and collection device, motor and power transmission components located in outside positively air ventilated compartment. Lubricated bearings shall be provided.

2.9.1.7 NOT USED

2.9.1.8 NOT USED

2.9.1.9 Ceiling Exhaust Fans

Suspended cabinet-type ceiling exhaust fans shall be centrifugal type, direct-driven. Fans shall have acoustically insulated housing. Integral backdraft damper shall be chatter-proof. The integral face grille shall be of egg-crate design or louver design. Fan motors shall be mounted on vibration isolators. Unit shall be provided with mounting flange for

hanging unit from above. Fans shall be U.L. listed.

2.9.2 NOT USED

2.9.3 Air Filters

Air filters shall be listed according to requirements of UL 900, except high efficiency particulate air filters of 99.97 percent efficiency by the DOP Test method shall be as listed under the Label Service and shall meet the requirements of UL 586.

2.9.3.1 NOT USED

2.9.3.2 NOT USED

2.9.3.3 NOT USED

2.9.3.4 Replaceable Media Filters

Replaceable media filters shall be the [dry-media] [viscous adhesive] type, of the size required to suit the application. Filtering media shall be not less than 50 mm (2 inches) thick fibrous glass media pad supported by a structural wire grid or woven wire mesh. Pad shall be enclosed in a holding frame of not less than 1.6 mm (16 gauge) galvanized steel, and equipped with quick-opening mechanism for changing filter media. The air flow capacity of the filter shall be based on net filter face velocity not exceeding 1.5 m/s (500 feet per minute), with initial resistance of 32 Pa (0.13 inches water gauge). Average efficiency shall be not less than 30 percent when tested according to ASHRAE 52.1.

2.9.3.5 NOT USED

2.9.3.6 NOT USED

2.9.3.7 NOT USED

2.9.3.8 NOT USED

2.9.3.9 Holding Frames

Frames shall be fabricated from not lighter than 1.6 mm (16 gauge) sheet steel with rust-inhibitor coating. Each holding frame shall be equipped with suitable filter holding devices. Holding frame seats shall be gasketed. All joints shall be airtight.

2.10 AIR HANDLING UNITS

2.10.1 Field-Fabricated Air Handling Units

Built-up units shall be as specified in paragraph DUCTWORK COMPONENTS. Fans, coils spray-coil dehumidifiers, and air filters shall be as specified in paragraph AIR SYSTEMS EQUIPMENT for types indicated.

2.10.2 Factory-Fabricated Air Handling Units

Units shall be single-zone draw-through type as indicated. Units shall include fans, coils, airtight insulated casing, filters, and diffuser sections where indicated, air blender adjustable V-belt drives, belt guards for externally mounted motors, access sections, mixing box spray type

humidifier, vibration-isolators, and appurtenances required for specified operation. Each air handling unit shall have physical dimensions suitable to fit space allotted to the unit and shall have the capacity indicated. Air handling unit shall have published ratings based on tests performed according to ARI ANSI/ARI 430.

2.10.2.1 Casings

Casing sections shall be single wall type, constructed of a minimum 18 gauge galvanized steel, or 18 gauge steel outer casing protected with a corrosion resistant paint finish according to paragraph FACTORY PAINTING. Casing shall be designed and constructed with an integral structural steel frame such that exterior panels are non-load bearing. Exterior panels shall be individually removable. Removal shall not affect the structural integrity of the unit. Casings shall be provided with inspection doors, access sections, and access doors as indicated. Inspection and access doors shall be insulated, fully gasketed, double-wall type, of a minimum 1.3 mm (18 gauge) outer and 1.0 mm (20 gauge) inner panels. Doors shall be rigid and provided with heavy duty hinges and latches. Inspection doors shall be a minimum 300 mm wide by 300 mm high. Access doors shall be minimum 600 mm wide and shall be the full height of the unit casing or a minimum of 1800 mm, whichever is less. Access Sections shall be according to paragraph AIR HANDLING UNITS. Drain pan shall be double-bottom type constructed of PVC, pitched to the drain connection. Drain pans shall be constructed water tight, and designed for positive condensate drainage. When 2 or more cooling coils are used, with one stacked above the other, condensate from the upper coils shall not flow across the face of lower coils. Intermediate drain pans or condensate collection channels and downspouts shall be provided, as required to carry condensate to the unit drain pan out of the air stream and without moisture carryover. Each casing section handling conditioned air shall be insulated with not less than 25 mm (1 inch) thick, 24 kg per cubic meter (1-1/2 pound density) coated fibrous glass material having a thermal conductivity not greater than 0.033 W/m-K (0.23 Btu/hr-sf-F). Factory applied fibrous glass insulation shall conform to ASTM C 1071, except that the minimum thickness and density requirements do not apply, and shall meet the requirements of NFPA 90A. Foam-type insulation is not acceptable. Foil-faced insulation shall not be an acceptable substitute for use on double-wall access doors and inspections doors and casing sections. Duct liner material, coating, and adhesive shall conform to fire-hazard requirements specified in Section 15080 THERMAL INSULATION FOR MECHANICAL SYSTEMS. Exposed insulation edges and joints where insulation panels are butted together shall be protected with a metal nosing strip or shall be coated to conform to meet erosion resistance requirements of ASTM C 1071. A latched and hinged inspection door, shall be provided in the fan and coil sections. Additional inspection doors, access doors and access sections shall be provided where indicated.

2.10.2.2 Heating and Cooling Coils

Coils shall be provided as specified in paragraph AIR SYSTEMS EQUIPMENT, for types indicated.

2.10.2.3 NOT USED

2.10.2.4 Air Filters

Air filters shall be as specified in paragraph AIR SYSTEMS EQUIPMENT for types and thickness indicated.

2.10.2.5 Fans

Fans shall be double-inlet, centrifugal type with each fan in a separate scroll. Fans and shafts shall be dynamically balanced prior to installation into air handling unit, then the entire fan assembly shall be statically and dynamically balanced at the factory after it has been installed in the air handling unit. Fans shall be mounted on steel shafts accurately ground and finished. Fan bearings shall be sealed against dust and dirt and shall be precision self-aligning ball or roller type. Bearing life shall be L50 rated at not less than 200,000 hours as defined by ABEMA Std 9 and ABEMA Std 11. Bearings shall be permanently lubricated or lubricated type with lubrication fittings readily accessible at the drive side of the unit. Bearings shall be supported by structural shapes, or die formed sheet structural members, or support plates securely attached to the unit casing. Bearings may not be fastened directly to the unit sheet metal casing. Fans and scrolls shall be furnished with coating indicated. Fans shall be driven by a unit-mounted or a floor-mounted motor connected to fans by V-belt drive complete with belt guard for externally mounted motors. Belt guards shall be the three sided enclosed type with solid or expanded metal face. Belt drives shall be designed for not less than a 1.3 service factor based on motor nameplate rating. Motor sheaves shall be variable pitch for 20 kW and below and fixed pitch above 20 kW as defined by ARI Guideline D. Where fixed sheaves are required, variable pitch sheaves may be used during air balance, but shall be replaced with an appropriate fixed sheave after air balance is completed. Variable pitch sheaves shall be selected to drive the fan at a speed that will produce the specified capacity when set at the approximate midpoint of the sheave adjustment. Motors for V-belt drives shall be provided with adjustable bases. Fan motors shall have splashproof enclosures. Motor starters shall be magnetic across-the-line type with general-purpose enclosure. Unit fan or fans shall be selected to produce the required capacity at the fan static pressure. Sound power level shall be as indicated. The sound power level values shall be obtained according to AMCA 300 or ASHRAE ANSI/ASHRAE 68.

2.10.2.6 Access Sections and Filter/Mixing Boxes

Access sections shall be provided where indicated and shall be furnished with access doors as shown. Access sections and filter/mixing boxes shall be constructed in a manner identical to the remainder of the unit casing and shall be equipped with access doors. Mixing boxes shall be designed to minimize air stratification and to promote thorough mixing of the air streams.

2.10.2.7 NOT USED

2.10.2.8 Dampers

Dampers shall be as specified in paragraph CONTROLS.

PART 3 EXECUTION

3.1 INSTALLATION

Work shall be installed as shown and according to the manufacturer's diagrams and recommendations.

3.1.1 NOT USED

3.1.2 NOT USED

3.1.3 NOT USED

3.1.4 NOT USED

3.1.5 NOT USED

3.1.6 NOT USED

3.1.7 NOT USED

3.1.8 NOT USED

3.1.9 Equipment and Installation

Frames and supports shall be provided for tanks, compressors, pumps, valves, air handling units, fans, coils, dampers, and other similar items requiring supports. Air handling units shall be floor mounted or ceiling hung, as indicated. The method of anchoring and fastening shall be as detailed. Floor-mounted equipment, unless otherwise indicated, shall be set on not less than 150 mm (6 inch) concrete pads or curbs doweled in place. Concrete foundations for circulating pumps shall be heavy enough to minimize the intensity of the vibrations transmitted to the piping and the surrounding structure, as recommended in writing by the pump manufacturer. In lieu of a concrete pad foundation, a concrete pedestal block with isolators placed between the pedestal block and the floor may be provided. The concrete foundation or concrete pedestal block shall be of a mass not less than three times the weight of the components to be supported. Lines connected to the pump mounted on pedestal blocks shall be provided with flexible connectors. Foundation drawings, bolt-setting information, and foundation bolts shall be furnished prior to concrete foundation construction for all equipment indicated or required to have concrete foundations. Concrete for foundations shall be as specified in Section 03300 CAST-IN-PLACE STRUCTURAL CONCRETE.

3.1.10 Access Panels

Access panels shall be provided for concealed valves, vents, controls, dampers, and items requiring inspection or maintenance. Access panels shall be of sufficient size and located so that the concealed items may be serviced and maintained or completely removed and replaced. Access panels shall be as specified in Section 05500 MISCELLANEOUS METALS.

3.1.11 Flexible Connectors

Pre-insulated flexible connectors and flexible duct shall be attached to other components in accordance with the latest printed instructions of the manufacturer to ensure a vapor tight joint. Hangers, when required to suspend the connectors, shall be of the type recommended by the connector or duct manufacturer and shall be provided at the intervals recommended.

3.1.12 Sleeved and Framed Openings

Space between the sleeved or framed opening and the duct or the duct insulation shall be packed as specified in Section 07270 FIRESTOPPING for

fire rated penetrations. For non-fire rated penetrations, the space shall be packed as specified in Section 07920 JOINT SEALING.

3.1.13 Metal Ductwork

Installation shall be according to SMACNA-06 unless otherwise indicated. Duct supports for sheet metal ductwork shall be according to SMACNA-06, unless otherwise specified. Friction beam clamps indicated in SMACNA-06 shall not be used. Risers on high velocity ducts shall be anchored in the center of the vertical run to allow ends of riser to move due to thermal expansion. Supports on the risers shall allow free vertical movement of the duct. Supports shall be attached only to structural framing members and concrete slabs. Supports shall not be anchored to metal decking unless a means is provided and approved for preventing the anchor from puncturing the metal decking. Where supports are required between structural framing members, suitable intermediate metal framing shall be provided. Where C-clamps are used, retainer clips shall be provided.

3.1.14 NOT USED

3.1.15 NOT USED

3.1.16 NOT USED

3.1.17 NOT USED

3.1.18 Dust Control

To prevent the accumulation of dust, debris and foreign material during construction, temporary dust control protection shall be provided. The distribution system (supply and return) shall be protected with temporary seal-offs at all inlets and outlets at the end of each day's work. Temporary protection shall remain in place until system is ready for startup.

3.1.19 Insulation

Thickness and application of insulation materials for ductwork, piping, and equipment shall be according to Section 15080 THERMAL INSULATION FOR MECHANICAL SYSTEMS. Outdoor air intake ducts and plenums shall be externally insulated.

3.1.20 Duct Test Holes

Holes with closures or threaded holes with plugs shall be provided in ducts and plenums as indicated or where necessary for the use of pitot tube in balancing the air system. Extensions, complete with cap or plug, shall be provided where the ducts are insulated.

3.1.21 Roof Ventilator Mounting

Foamed 13 mm thick, closed-cell, flexible elastomer insulation shall cover width of roof curb mounting flange. Where wood nailers are used, holes shall be pre-drilled for fasteners.

3.1.22 Power Transmission Components Adjustment

V-belts and sheaves shall be tested for proper alignment and tension prior to operation and after 72 hours of operation at final speed. Belts on

drive side shall be uniformly loaded, not bouncing. Alignment of direct driven couplings shall be to within 50 percent of manufacturer's maximum allowable range of misalignment.

3.2 NOT USED

3.3 NOT USED

3.4 NOT USED

3.5 CLEANING AND ADJUSTING

Pipes shall be cleaned free of scale and thoroughly flushed of foreign matter. A temporary bypass shall be provided for water coils to prevent flushing water from passing through coils. Strainers and valves shall be thoroughly cleaned. Prior to testing and balancing, air shall be removed from water systems by operating the air vents. Temporary measures, such as piping the overflow from vents to a collecting vessel shall be taken to avoid water damage during the venting process. Air vents shall be plugged or capped after the system has been vented. Inside of ducts, plenums, and casing shall be thoroughly cleaned of debris and blown free of small particles of rubbish and dust and then shall be vacuum cleaned before installing outlet faces. Equipment shall be wiped clean, with traces of oil, dust, dirt, or paint spots removed. Temporary filters shall be provided prior to startup of all fans that are operated during construction, and new filters shall be installed after all construction dirt has been removed from the building, and the ducts, plenums, casings, and other items specified have been vacuum cleaned. System shall be maintained in this clean condition until final acceptance. Bearings shall be properly lubricated with oil or grease as recommended by the manufacturer. Belts shall be tightened to proper tension. Control valves and other miscellaneous equipment requiring adjustment shall be adjusted to setting indicated or directed. Fans shall be adjusted to the speed indicated by the manufacturer to meet specified conditions.

3.6 TESTING, ADJUSTING, AND BALANCING

Testing, adjusting, and balancing shall be as specified in Section 15990 TESTING, ADJUSTING AND BALANCING OF HVAC SYSTEMS. Testing, adjusting, and balancing shall begin only when the air supply and distribution, including controls, has been completed, with the exception of performance tests.

3.7 PERFORMANCE TESTS

After testing, adjusting, and balancing has been completed as specified, each system shall be tested as a whole to see that all items perform as integral parts of the system and temperatures and conditions are evenly controlled throughout the building. Corrections and adjustments shall be made as necessary to produce the conditions indicated or specified. Capacity tests and general operating tests shall be conducted by an experienced engineer. Tests shall cover a period of not less than 2 days for each system and shall demonstrate that the entire system is functioning according to the specifications. Coincidental chart recordings shall be made at points indicated on the drawings for the duration of the time period and shall record the temperature at space thermostats or space sensors, the humidity at space humidistats or space sensors and the ambient temperature and humidity in a shaded and weather protected area.

3.8 FIELD TRAINING

The Contractor shall conduct a training course for operating and maintenance personnel as designated by the Contracting Officer. Training shall be provided for a period of 4 hours of normal working time and shall start after the system is functionally complete but prior to the performance tests. The field instruction shall cover all of the items contained in the approved Operating and Maintenance Instructions.

-- End of Section --

SECTION 15940

OVERHEAD VEHICLE TAILPIPE EXHAUST SYSTEM(S)

PART 1 GENERAL

1.1 REFERENCES

The publications listed below form a part of this specification to the extent referenced. The publications are referred to in the text by basic designation only.

AIR MOVEMENT AND CONTROL ASSOCIATION (AMCA)

AMCA 210	(1985) Laboratory Methods of Testing Fans for Rating

AMERICAN SOCIETY FOR TESTING AND MATERIALS (ASTM)

ASTM A 36/A 36M	(1996) Carbon Structural Steel
ASTM A 53	(1996) Pipe, Steel, Black and Hot-Dipped, Zinc-Coated, Welded and Seamless
ASTM A 167	(1993) Stainless and Heat-Resisting Chromium-Nickel Steel Plate, Sheet, and Strip
ASTM A 193/A 193M	(1996) Alloy-Steel and Stainless Steel Bolting Machine Materials for High-Temperature Service
ASTM A 307	(1994) Carbon Steel Bolts and Studs, 60 000 PSI Tensile Strength
ASTM A 569/A 569M	(1996) Steel, Carbon (0.15 Maximum, Percent), Hot-Rolled Sheet and Strip Commercial Quality
ASTM A 924/A 924M	(1996a) General Requirements for Steel Sheet, Metallic-Coated by the Hot-Dip Process
ASTM B 32	(1996) Solder Metal
ASTM B 117	(1995) Operating Salt Spray (Fog) Apparatus
ASTM E 437	(1992) Industrial Wire Cloth and Screens (Square Opening Series)

AMERICAN SOCIETY OF MECHANICAL ENGINEERS (ASME)

ASME B16.21	(1992) Nonmetallic Flat Gasket for Pipe Flanges
ASME BPV IX	(1995; Addenda Dec 1995, Dec 1996) Boiler

and Pressure Vessel Code; Section IX, Welding and Brazing Qualifications

AMERICAN WELDING SOCIETY (AWS)

AWS A5.8 (1992) Filler Metals for Brazing and Braze Welding

SHEET METAL & AIR CONDITIONING CONTRACTORS' NATIONAL ASSOCIATION (SMACNA)

SMACNA-08 (1977) Round Industrial Duct Construction Standards

1.2 GENERAL REQUIREMENTS

1.2.1 Standard Products

Material and equipment shall be a standard product of a manufacturer regularly engaged in the manufacture of the product and shall essentially duplicate items that have been in satisfactory use for at least 2 years prior to bid opening. Where an integrated, packaged exhaust system is furnished, all items will be the product of the system manufacturer. System component parts may be by other manufacturers. Equipment shall be supported by a service organization that is, in the opinion of the Contracting Officer, reasonably convenient to the site.

1.2.2 Nameplates

Each major component of equipment shall have the manufacturer's name, address, type or style, model or serial number, and catalog number on a plate secured to the equipment.

1.2.3 Equipment Guards and Access

Belts, pulleys, chains, gears, couplings, projecting setscrews, keys, and other rotating parts exposed to personnel contact shall be fully enclosed or guarded. High temperature equipment and piping exposed to contact by personnel or where it creates a potential fire hazard shall be properly guarded or covered with insulation of a type specified.

1.2.4 Verification of Dimensions

The Contractor shall become familiar with all details of the work, verify all dimensions in the field and advise the Contracting Officer of any discrepancy before performing the work.

1.3 SUBMITTALS

Government approval is required for submittals with a "GA" designation; submittals having an "FIO" designation are for information only. The following shall be submitted in accordance with Section 01330 SUBMITTAL PROCEDURES:

SD-01 Data

Exhaust System; GA.

Spare parts data for each different item of material and equipment

specified, after approval of detail drawings and not later than 2 months before the date of beneficial occupancy. Data shall include a complete list of parts and supplies with current unit prices and source of supply.

SD-04 Drawings

Exhaust System; GA.

Detail drawings consisting of a complete list of equipment and materials, including manufacturer's descriptive and technical literature, performance charts and curves, catalog cuts, and installation instructions. Detail drawings shall also contain complete duct, wiring, and schematic diagrams and any other details to demonstrate that the system has been coordinated and will properly function as a unit. Drawings shall show proposed layout and anchorage of equipment and appurtenances, and equipment in relation to other parts of the work including clearances required for maintenance and operation.

SD-06 Instructions

Exhaust System; GA.

Proposed diagrams, instructions, and other sheets, prior to posting. Framed instructions under glass or in laminated plastic shall be posted where directed, including wiring and control diagrams showing the complete layout of the entire system. Condensed operating instructions explaining preventive maintenance procedures, methods of checking the system for normal safe operation, and procedures for safely starting and stopping the system shall be prepared in typed form, framed as specified above for the wiring and control diagrams and posted beside the diagrams. The framed instructions shall be posted before acceptance testing of the systems.

SD-09 Reports

Tests; GA.

Test reports in booklet form showing all field tests performed to adjust each component and all field tests performed to prove compliance with the specified performance criteria, upon completion and testing of the installed system. Each test report shall indicate the final position of controls.

1.4 DELIVERY AND STORAGE

All equipment delivered and placed in storage shall be protected from the weather, humidity, temperature variations, dirt, dust, or other contaminants.

1.5 OPERATION AND MAINTENANCE MANUALS

Six complete copies of operating instructions outlining the step-by-step procedures required for system startup, operation and shutdown for the exhaust system shall be provided. The instructions shall include the manufacturer's name, model number, service manual, parts list, and brief description of all equipment and their basic operating features. Six complete copies of maintenance instructions listing routine maintenance procedures, possible breakdowns and repairs, and troubleshooting guides shall be provided. The instructions shall include duct and equipment layout and simplified wiring and control diagrams of the system as

installed.

PART 2 PRODUCTS

2.1 MATERIALS AND EQUIPMENT

Materials and equipment shall conform to the following requirements.

2.1.1 Screen

ASTM E 437, type and class as required for the application.

2.1.2 Iron and Steel Sheets

2.1.2.1 Galvanized Iron and Steel

ASTM A 924/A 924M, Coating Designation G90.

2.1.2.2 Uncoated Steel

ASTM A 569/A 569M, condition, and type best suited to intended use.

2.1.2.3 Stainless Steel

ASTM A 167, Type 304.

2.1.3 Steel Structural Shapes

ASTM A 36/A 36M.

2.1.4 Solder Silver

AWS A5.8, brazing alloy; grade to suit application.

2.1.5 Solder

ASTM B 32, composition to suit application.

2.1.6 Bolts and Nuts

Bolts and nuts, except as required for high temperature exhaust applications, shall be in accordance with ASTM A 307. Bolts and nuts used for exhaust applications where the temperature of the bolt may rise above 200 degrees C or used as flange bolts in corrosion resistant material shall be in accordance with ASTM A 193/A 193M Class 2. The bolt head shall be marked to identify the manufacturer and the standard with which the bolt complies in accordance with ASTM A 307or ASTM A 193/A 193M as applicable.

2.2 ELECTRICAL WORK

Electrical motor-driven equipment shall be provided complete with motor starters, high efficiency motors and controls. Electrical equipment, wiring, and motor efficiencies shall be in accordance with Section 16415 ELECTRICAL WORK, INTERIOR. Motor starters shall be provided complete with properly sized thermal-overload protection and other appurtenances necessary for the motor control specified. Manual or automatic control and protective or signal devices required for the operation specified, and any control wiring required for control devices but not shown, shall be provided.

2.3 AIR MOVING DEVICES

2.3.1 General

Fans shall be tested and rated in accordance with the standards of AMCA 210. Where V-belt drives are used, such drives shall be designed for not less than 150 percent of the connected driving capacity, and motor sheaves shall be adjustable to provide not less than an overall 20 percent speed variation. Sheaves shall be selected to drive the fan at such speed as to produce the specified capacity when set at the approximate midpoint of the sheave adjustment. Motors for V-belt drives shall be provided with adjustable rails or bases. Fans shall be provided with personnel screens or guards on both suction and supply ends except where ducts or dampers are connected to the fan. Fans and motors shall be provided with vibration isolation supports or mountings. Vibration isolation units shall be standard products with published load ratings, and shall be single rubber-in-shear, neoprene coated fiberglass, double rubber-in-shear springs, or springs under inertia base. Each fan shall be selected to produce the capacity required at the fan total pressure indicated. Standard AMCA arrangements shall be provided unless otherwise indicated and the rotation and discharge shall be as indicated. Fans shall have nonoverloading characteristics. Fan housing shall be constructed with not less than 1.6 mm (16 gauge) thickness of steel. Fan impellers shall be constructed of heavy gauge steel and accurately balanced both statically and dynamically when installed in the assembled fan unit. A NEMA 7 non-combustible fan shall be provided. Impeller and housing in the air stream shall be coated with neoprene, epoxy, phenolic resins, or other approved material suitable to resist the corrosive gases and temperatures produced. Fans shall be free of objectionable vibration or noise. Certified performance curves indicating that the fan supplied will operate in its most efficient operating range will be provided. In addition, "sound power" ratings shall be furnished with each fan. Fans indicated to be mounted on exterior of building shall be provided with weatherproof covers for the motor drive unit or other weatherproofing as recommended by the manufacturer. Each fan shall be selected to produce the capacity required at the fan total pressure indicated. Weather hoods, flashing, and bird screens shall be provided where indicated.

2.3.2 Centrifugal Fans

Centrifugal fans shall be fully enclosed, single-width, single-inlet or double-width, double-inlet, as required or indicated. Impeller wheels shall have backward-inclined or backward-curved blades of the nonoverloading type. Fan wheels over 914 mm (36 inches) diameter shall have overhung pulleys and a bearing on each side of the wheel. Fan wheels 914 mm (36 inches) or less in diameter may have one or more extra-long bearings between the fan wheel and the drive. The bearings shall be self-aligned ball-bearing type with provisions for lubrication. Fan shafts shall be steel, accurately finished, and shall be provided with key and key seats for impeller hubs and fan pulleys. The fans shall be furnished with factory-finish coating. Motor shall have dripproof enclosure, unless otherwise indicated. Motor starters shall be manual across-the-line with general-purpose enclosures.

2.4 DUCTWORK

2.4.1 General

Duct shall be constructed of galvanized sheets of the minimum gauge thickness for ducts as required in SMACNA-08. Ducts shall be constructed and sealed in accordance with SMACNA-08 for a negative pressure of 1500 Pa (6 inch water gauge) static pressure. Ducts, unless otherwise approved, shall be round with longitudinal lock seam and conform to the dimensions indicated. Ducts shall be straight and smooth on the inside with airtight joints. Where ducts with crimped ends are used to make up joints, the joints shall have crimp and bead. The bead shall provide a rigid stop for the mating open end to seat against. Steel spiral wound duct is not acceptable.

2.4.2 Fittings

Reducing fittings shall have a minimum of 1 mm increase in diameter per 8 mm in length. Elbows shall have a centerline radius of not less than 1-1/2 times the diameter. Branches shall stub into mains at main expansion points at an angle of not more than 30 degrees with the centerline of the main duct in the direction of air flow, unless otherwise indicated or approved. Where riser ducts with single or multiple inlets are indicated, the riser duct shall connect into the bottom of the main duct at an angle as specified for branches. Where flexible connections connect to the main duct, the duct branch takeoff or stub shall be braced with approved metal straps or members.

2.4.3 Cleanout

Cleanout shall be provided on the end of the main ductwork opposite the end of the fan suction connection. The cleanout opening shall be sized to the approximate inside area of the duct. Removable airtight caps or flange type covers of minimum gauge thickness as the main duct shall be provided. Other cleanout openings shall be provided where indicated.

2.4.4 Apparatus Connections

Where sheet metal connections are made to fan suction and discharge, or where ducts of dissimilar metals are connected, an approved noncombustible flexible connection approximately 150 mm wide shall be installed and securely fastened by zinc-coated steel clinch-type draw bands for round ducts. For rectangular ducts the flexible connections locked to metal collars shall be installed using normal duct construction methods.

2.4.5 Duct Test Holes

Test holes with covers shall be provided where indicated, directed, or where necessary in ducts and plenums for using Pitot tubes for taking air measurements to balance the air systems.

2.4.6 Duct Sleeves and Framed Openings

Duct sleeves shall be provided for all round ducts 375 mm diameter or less passing through floors, walls, ceilings, or roofs. Sleeves in nonload bearing walls shall be fabricated of 1.0 mm (20 gauge) steel sheets conforming to ASTM A 924/A 924M. Sleeves in load-bearing walls shall be fabricated of standard-weight galvanized steel pipe conforming to ASTM A 53. Round ducts larger than 375 mm diameter and all square and rectangular ducts passing through floors, walls, ceilings, or roofs shall be installed through framed openings. Structural steel members for framed openings shall conform to ASTM A 36/A 36M. Framed openings shall provide 25 mm (1 inch) clearance between the duct and the opening. Closure collar of

galvanized steel not less than 100 mm wide shall be provided on each side of walls or floors where sleeves or framed openings are provided. Collars for round ducts 375 mm diameter or less shall be fabricated from 1.0 mm (20 gauge), galvanized steel. Collars for round, square or rectangular ducts with minimum dimension over 375 mm shall be fabricated from 1.2 mm (18 gauge), galvanized steel.

2.4.7 EXHAUST TUBING SYSTEM

2.4.8 Tailpipe Adapters

Tailpipe adapters shall be fabricated of not less than 1.0 mm (20 gauge) stainless steel. Adapters shall be of the tapered-cone type with spring clips or other suitable devices for exhaust pipe attachment. The adapter shall fit 100 mm (4 inch) nominal diameter exhaust pipe.

2.4.9 Welding Fume Receptors

Welding fume receptors shall be constructed of not less than 1.0 mm (20 gauge) thick aluminum, shall have swivel connections, magnets on receptor base, and shall be equipped with 13 mm (1/2 inch) mesh receptor screens.

2.4.10 Flexible Exhaust Tubing

Flexible exhaust tubing shall be approved heat-resistant wire reinforced glass fiber and silicone tubing. Wye connectors shall be provided where shown. Flexible tubing inside diameter and length shall be as shown. The tubing shall hang from the bottom of the ductwork. A flanged connection shall be provided where the flexible tubing and overhead ductwork are joined. The flanged connection shall consist of steel flanges not less than 200 mm (0.078 inch) thick, 3.175 mm (1/8 inch) nonasbestos gasket and cadmium-plated bolts with nuts. The gasket shall be nonasbestos compressed material, suitable for the system design temperature shown, in accordance with ASME B16.21, full face or self-centering flat ring type. It shall contain aramid fibers bonded with styrene butadiene rubber (SBR) or nitrile butadiene rubber (NBR). The flange shall be sized or designed to suit the hose as approved.

2.4.11 Flexible Tubing Suspension System

The flexible tubing suspension system shall suspend the flexible tubing overhead when not in use; allowing it to be lowered to the operating level, when required. The suspension system shall be furnished complete with cable, pulleys, and operating mechanism. The suspension system shall be a tubing storage reel for a carbon monoxide exhaust system.

2.5 DAMPERS

Dampers shall be of the type indicated and installed where shown. Dampers shall be of the circular disk type with quadrant locking device or blast gate type. Damper blades shall be not less than 1.6 mm (16 gauge) thickness of stainless steel. Blast gate dampers shall be two piece construction with adjustable sliding gate and setscrew.

2.6 FACTORY COATING

Equipment and component items, when fabricated from ferrous metal, shall be factory finished with the manufacturers standard finish except that items located outside of building shall have weather-resistant finishes that will

withstand 500 hours exposure to the salt spray test specified in ASTM B 117, using a 5 percent sodium chloride solution as specified in ASTM B 117. Immediately after completion of the test, the specimen shall show no sign of blistering, wrinkling, cracking, or loss of adhesion, and no sign of rust creepage beyond 3 mm on either side of the scratch mark.

PART 3 EXECUTION

3.1 INSTALLATION

3.1.1 Exhaust System

The overhead exhaust system shall be installed as indicated and recommended by the manufacturer. Welding and brazing shall conform to ASME BPV IX. Horizontal sections of the main duct shall be installed with the longitudinal lock seam on the top. Slip joints shall be sealed in accordance with SMACNA-08. Riser duct shall be supported and anchored to the structure as indicated. Main duct shall be attached to the structural members of the building as recommended by SMACNA-08.

3.1.2 Building Surface Penetrations

Sleeves or framed openings shall be utilized where duct penetrates building surfaces. Penetrations shall be sealed, and fireproofed in accordance with Section 07270 FIRESTOPPING. The space between the sleeve or framed opening and the duct shall be packed with mineral wool or other approved material. Closure collars shall be installed around the duct on both sides of the penetrated surface. Collars shall fit tight against the building surfaces and snugly around the duct.

3.2 FIELD PAINTING AND FINISHING

Painting required for surfaces not otherwise specified and finish painting of items only primed at the factory shall be as specified in Section 09900 PAINTING, GENERAL.

3.3 TESTS

Each exhaust system and inlet shall be balanced to produce the indicated air quantities within 10 percent at the conditions shown. Control devices shall be set to control at the points indicated or directed. Bearings shall be lubricated, and the speed, direction or rotation of each fan shall be checked. The running current of each motor shall be checked. Upon completion, and prior to acceptance of the installation, the exhaust system shall be tested at operating conditions to demonstrate satisfactory functional and operating efficiency. Operating tests shall cover a period of not less than 2 hours for each system, and all tests shall be conducted in the presence of the Contracting Officer. If tests do not demonstrate satisfactory operation of the exhaust system, deficiencies shall be corrected and retested. All instruments, facilities, and labor required to properly conduct the tests shall be provided by the Contractor. The electricity required for testing will be furnished by the Government.

3.4 TRAINING

The Contractor shall conduct a training course for the operating staff as designed by the Contracting Officer. The training period shall consist of a total 8 hours of normal working time and shall start after the system is functionally completed but prior to final acceptance tests. The field

instructions shall cover all of the items contained in the Operation and Maintenance Manuals, as well as demonstrations of routine maintenance operations. The Contracting Officer shall be notified at least 14 days prior to date of proposed conduction of the training course.

-- End of Section --

SECTION 15951

DIRECT DIGITAL CONTROL FOR HVAC SYSTEMS

PART 1 GENERAL

1.1 RELATED DOCUMENTS

1.1.1

Drawings and general provisions of Contract, including General and Supplementary Conditions and Division 1 Specification section, apply to work of this section.

1.2 DESCRIPTION OF WORK

1.2.1

Extension of existing copper digital control DDC system network.

1.2.2

The direct digital control system (DDC) shall be a complete system suitable for heating, ventilation and air conditioning (HVAC) system.

1.2.2.1 Provide direct digital controllers for the following systems:

a. AHU-1, AHU-2, RF-1, RF-2, EF-1.

1.2.3 Types of equipment specified including the following:

a. Direct digital control system control components including stand alone controllers, communication modules, and system software.

b. Temperature sensors.

c. Current sensing switches.

1.2.4

Refer to other Division 15 sections for installation of instrument wells, and dampers in mechanical systems, which is not work of this section.

1.2.5

Refer to Division 16 sections for the following work; not work of this section.

a. Power supply wiring for power source to power connections on controls and/or unit control panels. Include starters, disconnects, and required electrical devices, except where specified as furnished, or factory-installed, be manufacturer.

1.2.6

Provide the following electrical work as work this section, complying with

requirements of Division 16 sections:

a. Control wiring between field-installed controls, indicating devices, and unit control panels.

b. Interlock wiring between electrically operated equipment units and between equipment and field-installed control devices.

1.3 QUALITY ASSURANCE

1.3.1 Manufacturer's Qualifications

Firms regularly engaged in manufacture of electric control equipment, of types and sizes required, whose products have been in satisfactory use in similar service.

1.3.2 Installer's Qualifications

Firm specializing and experienced in electric control system installation.

1.3.3 Codes and Standards

1.3.3.1 Electrical Standards

Provide electrical products, which have been tested, listed, and labeled UL and comply with NEMA standards.

1.3.3.2 NEMA Compliance

Comply with NEMA standards pertaining to components and devices for electric control systems.

1.3.3.3 NFPA Compliance

Comply with NFPA 90A "Standard for the Installation of Air Conditioning and Ventilating Systems" where applicable to controls and control sequences.

1.3.3.4

All wiring shall conform to the National Electrical Code.

1.3.3.5

Comply with FCC rules, part 15, regarding Class A radiation for computing devices and low power communication equipment operating in commercial environments.

1.3.3.6

The Direct Digital Control (DDC) system shall comply with ANSI/ASHRAE Standard 135-1995, BACnet, Class 2 communications (both read information from the control device and write information to the device resulting in full control of that device). Furthermore, the DDC system shall be capable of BACnet Class 2 communications with the base HVAC LAN system and the existing base wide Andover Control System. The DDC shall be compatible with the existing base wide Andover Control System, and shall be controlled from the existing workstations in buildings 403 and 426. A new work station will NOT be in the Consolidated Maintenance Facility. The contractor will be responsible for connection to the Andover System.

1.4 SUBMITTALS

Government approval is required for submittals with a "GA" designation; submittals having an "FIO" designation are for information only. The following shall be submitted in accordance with Section 01300 SUBMITTAL DESCRIPTIONS:

1.5 SHOP DRAWINGS, PRODUCT AND MAINTENANCE DATA; GA

1.5.1 Product Data

Submit manufacturer's technical product data fro each control devices furnished, indicating dimensions, capacities, performance characteristics, electrical characteristics, finishes of materials, and including installation instructions and start-up instructions.

1.5.2 Shop Drawings

Shall be provided for the DDC system.

1.5.3 Maintenance Data

Submit maintenance instructions and spare parts lists. Include this data, product data, and shop drawings in maintenance manuals in accordance with requirements of Division 1.

1.5.4 Warranty

Provide 1-year warranty on new system components.

1.6 SYSTEM OVERVIEW

1.6.1

The DDC system shall consist of a network of stand-alone digital controllers, providing distributed processing capability, and allowing future expansion of both input/output points and processing/control functions.

1.6.2

These shall be a minimum of two levels of controllers:

a. Level 1 controllers shall contain a high speed LAN communication bus capable of sharing data at high speed among other level 1 controllers and the operator workstation. This LAN bus shall operate under Ethernet protocol at 10 Mbps.

b. Level 2 controller shall be stand-alone controllers dedicated to a single piece of equipment (application specific controllers). They shall be connected to Level 1 controllers through a RS485 local bus with a minimum speed of 19200 baud. The local bus shall permit peer to peer communication with a laptop service tool. Failure of the Level 1 controller shall not affect the operation of its associated local bus.

1.6.3

All points contained on Level 1 and Level 2 controllers shall be considered global points, and any program shall be able to reference any point, anywhere in the network.

1.6.4

Touch screen display controllers shall be connected directly to the LAN network. The touch screen display station shall also be able to communicate to remote network controllers without disrupting communication with the network.

PART 2 PRODUCTS

2.1 CONTROLLER

2.1.1 Level 1 Controllers

On board CPU, clock/calendar, EEPROM, RAM, ROM, and communication ports for local and LAN bus, and RS232 ports. Firmware shall consist of the operating system, communication software, programming language, and resident control application software.

2.1.1.1 Application Software

Shall reside in battery back RAM or EEPROM, RAM will be used for storing trend data, alarms, and clock/calendar information.

2.1.1.2 Input/Output

Provide universal inputs capable of accepting information on any point in the form of a temperature, voltage, digital or pulse counter - selectable by programming change. Outputs shall include digital, universal and tri-state. Outputs shall have built-in had-off-auto switches for local override. Universal outputs shall have override potentiometer for manual adjustment of the analog signal.

2.1.1.3

Controller shall provide minimum of 72 hours of battery backup for all volatile memory. Upon restoration of power, controller shall automatically update all monitored functions, resume operation while implementing any special startup strategies. Provide LED indication minimum of CPU status, and local bus status.

2.1.2 Level 2 Controller

Application specific controllers, with on board CPU, EEPROM, RAM, ROM, and communication ports for local bus. Firmware shall consist of the operating system, communication software, programming language, and resident control application software.

2.1.2.1 Application Software

Shall reside in battery back RAM or EEPROM. RAM will be used for storing trend date, alarms and clock/calendar information.

2.1.2.2 Input/Output

Provide universal inputs capable of accepting information on any point in the form of a temperature, voltage, digital or pulse counter - selectable by programming change. Outputs shall include digital, universal and tri-state. Outputs shall have built in hand-off-auto switches for local override. Universal outputs shall have override potentiometer for manual adjustment of the analog signal.

2.1.2.3

Controller shall provide minimum of 72 hours of battery backup for all volatile memory. Upon restoration of power, controller shall automatically update all monitored functions, resume operation while implementing any special startup strategies. Provide LED indication minimum of CPU status, LAN status, and local bus status.

2.2 MATERIAL AND EQUIPMENT

2.2.1 General

Provide control products in sizes and capacities indicated, consisting of dampers, thermostats, sensors, controllers, and other components as required for a completion installation. Except as otherwise indicated, provide manufacturer's standard control system components as indicated by published product information, designed and constructed as recommended by manufacturer. Provide control systems with following functional and construction features as indicated.

2.2.2 Dampers

Provide automatic control dampers as indicated, with damper frames not less than formed 13-ga galvanized steel. Provide mounting holes for enclosed duct mounting. Provide damper blades not less than formed 16-ga galvanized steel, with maximum blade width of 8". Equipment dampers with operators, with positioning relays, and proper rating for each application.

2.2.2.1

Secure blades to 1/2" diameter zinc-plated axles using zinc-plated hardware. Seal off against spring stainless steel blade bearings. Provide blade bearings of nylon and provide thrust bearings at each end of every blade. Construct blade linkage hardware of zinc-plated steel and brass. Submit leakage and flow characteristics, plus size schedule for controller dampers.

2.2.2.2 Operating Temperature Range

From -20 F to 200 F (-29 C to 93 C).

2.2.2.3

Provide parallel or opposed blade design (as selected by manufacturer's sizing techniques) with inflatable seal blade edging, or replaceable rubber seals, rated for leakage at less than 10 cfm sq. ft. of damper area, at differential pressure of 4" w.g. when damper is being held by torque of 50 inch-pound.

2.2.3 Damper and Valve Operators

Provide electric operators, size each operator to operate dampers with

sufficient reserve power to provide smooth modulating action or 2-position action as specified. Provide positive positioner with adjustable start point and operating range.

2.2.4 Temperature Sensors

Shall be of the following types:

APPLICATION	DEVICES
Outside air	Premium Thermistor
Supply/return air	Premium Thermistor
Space temperature	Premium Thermistor

2.2.5 NOT USED

2.2.6 NOT USED

2.2.7 Current Sensing Switch

Provide for status of fan motors; Neilsen-Kuljian current operated switch (adjustable), or equal.

2.3 SEQUENCE OF CONTROL

2.3.1 AHU-1 Control

A space temperature sensor, located as shown, shall signal the units DDC controller to maintain space temperature setpoints.

Ventilation-delay Mode - Shall start prior to the occupied mode, the system supply fan shall start and run continuously, heating and cooling systems shall operate as directed by the DDC controller, return air damper shall be open, outside air and relief air dampers shall be in the closed position, and relief fan "RF-1" shall be off.

Occupied Mode - The system supply fan shall run continuously, heating and cooling systems shall operate as directed by the DDC controller, return air damper shall be open, outside air damper shall be at its minimum outside air setpoint position, the relief air damper shall be closed, and relief fan "RF-1" shall be off.

Unoccupied Mode - The system supply fan, heating and cooling systems shall stop/start as directed by the DDC controller, return air damper shall be open, outside air and relief air dampers shall be in the closed position, and relief fan "RF-1" shall be off.

Hood Mode - When EF-2 is activated, the motorized damper on the return air grille in Room 127 (NDI Lab) shall close to minimum position (500 cfm or 235 L/sec). The outside air damper shall open to its middle outside air setpoint position (1100 cfm or 519 L/sec).

Economizer Mode - The DDC controller shall accept a signal from an outside air temperature sensing element and transmitter and a signal from the return air temperature sensing element and transmitter. The DDC controller shall place the AHU in the economizer mode as determined by the comparison of the outside air and return air temperatures in accordance with the differential temperature setpoints. When the AHU is in the economizer mode

the outside air and relief air dampers shall be in the full open positions, the return air damper shall be in the closed position, the supply fan shall run continuously, the heating and cooling systems shall operate as directed by the DDC controller, and RF-1 shall be on.

2.3.2 AHU-2 Control

A space temperature sensor, located as shown, shall signal the units DDC controller to maintain space temperature setpoints.

Ventilation-delay Mode - Shall start prior to the occupied mode, the system supply fan shall start and run continuously, heating and cooling systems shall operate as directed by the DDC controller, return air damper shall be open, outside air and relief air dampers shall be in the closed position, and relief fan "RF-2" shall be off.

Occupied Mode - The system supply fan shall run continuously, heating and cooling systems shall operate as directed by the DDC controller, return air damper shall be open, outside air damper shall be at its minimum outside air setpoint position, the relief air damper shall be closed, and relief fan "RF-2" shall be off.

Unoccupied Mode - The system supply fan, heating and cooling systems shall stop/start as directed by the DDC controller, return air damper shall be open, outside air and relief air dampers shall be in the closed position, and relief fan "RF-2" shall be off.

Economizer Mode - The DDC controller shall accept a signal from an outside air temperature sensing element and transmitter and a signal from the return air temperature sensing element and transmitter. The DDC controller shall place the AHU in the economizer mode as determined by the comparison of the outside air and return air temperatures in accordance with the differential temperature setpoints. When the AHU is in the economizer mode the outside air and relief air dampers shall be in the full open positions, the return air damper shall be in the closed position, the supply fan shall run continuously, the heating and cooling systems shall operate as directed by the DDC controller, and RF-2 shall be on.

2.3.3

EF-1 shall operate continuously.

EF-2-5, 8, 10 shall be provided with manual start/stop.

EF-6 shall operate whenever the space temperature is above 96 deg. F. LV-3 shall open when DF-1 or DF-2 are operating. EF-6 shall be interlocked to LV-3 and LV-15.

EF-7 shall operate whenever the space temperature is 96 deg. F or above, and shall be interlocked to LV-6. LV-4 and 8 shall open when EF-7 is activated, and close when EF-2 is de-activated.

EF-9 shall operate whenever the space temperature is 96 deg. F or above, and shall be interlocked to LV-11. LV-10 shall open when EF-9 is activated, and close when EF-9 is de-activated.

2.3.4 MUA-1 and MUA-2

MUA-1: Winter Mode - shall operate whenever the space temperature is below

65 deg. F, and shall be interlocked to LV-12. LV-9 shall open when MUA-1 is activated, and close when MUA-1 is de-activated.

MUA-1: Summer Mode - shall operate in a NO FIRE condition (BLOWER ONLY) whenever the space temperature is 96 deg. F or above, and shall be interlocked to LV-12. LV-9 shall open when MUA-1 is activated and close when MUA-1 is de-activated.

MUA-2: Shall operate whenever the space temperature is below 65 deg. F, and shall be interlocked to LV-5. LV-7 shall open when MUA-2 is activated and close when MUA-2 is de-activated.

2.3.5 Smoke Control AHU-1 and AHU-2

All Modes - Smoke detectors located in the supply air ductwork shall stop the supply fan and initiate a smoke alarm if smoke is detected. Restarting the supply fan shall require a manual reset at the smoke detector.

2.3.6 Unit Heater Control

A wall mounted low voltage thermostat located as shown, shall cycle heater elements and supply fan to maintain space temperature setpoints.

PART 3 EXECUTION

3.1 INSPECTION

Examine areas and conditions under which digital control systems are to be installed. Do not proceed with work until satisfactory conditions have been corrected in manner acceptable to install.

3.2 INSTALLATION OF DIGITAL CONTROL SYSTEMS

3.2.1 General

Install systems and material in accordance with manufacturer's instructions and roughing in drawings, and details on drawings. Install electrical components and use electrical products complying with requirements of applicable Division 16 sections of these specifications. Mount controllers at convenience locations and heights.

3.2.2 Control and Interlocking Wiring

The term "control and interlocking wiring" is defined to include providing of wire, conduit and miscellaneous material as required for mounting and connecting electric control devices.

3.2.3 Wiring System

Install complete control wiring system for electric control systems. Conceal wiring except in mechanical rooms and areas where other conduit and piping are enclosed. Provide multi-conductor instrument harness (bundle) in place of single conductors, where number of conductors bridging cabinets and doors, neatly along hind side and protect against abrasion. Tie and support conductors neatly.

3.2.4

Number-code or color-code conductors, excluding those used for local

individual room controls, appropriately for future identification and servicing of control system.

3.3 ADJUSTING AND CLEANING

3.3.1 Start-Up

Start-up, test and adjust digital control systems in presence of manufacturer's authorized representative. Demonstrate compliance with requirements. Replace damaged or malfunctioning controls and equipment.

3.3.2 Cleaning

Clean factory-finished surfaces. Repair any marred or scratched surfaces with manufacturer's touch-up paint.

3.3.3 Final Adjustment

After completion of installation, adjust thermostats, control valves, motors and similar equipment provided as work of this section.

3.3.3.1

Final adjustment shall be performed by specifically trained personnel in direct employ of manufacturer of primary temperature control system.

3.4 CLOSEOUT PROCEDURES

3.4.1 Owner's Instructions

Provide services of manufacturer's technical representative to instruct Owner's personnel in operation and maintenance of electric control systems.

3.4.1.1

Schedule instruction with Owner; provide at least 7-day notice to Contractor and Engineer of training date.

3.4.1.2

Provide sixteen (16) hours of training minimum for Owner's operating personnel. Training shall include:

a. Explanation of drawings, operations and maintenance manuals.

b. Work through of job to locate control components.

c. Operators workstation and peripherals.

d. Explanation of adjustment, calibration and replacement procedures.

3.4.1.3

Pursuant to operator training and system commissioning, provide six (6) copies of revised operator manuals to the owner representative. Manual to include new and existing equipment, description of operation and schematic layouts of all HVAC systems controlled by the building automatic system.

3.4.2 Warranty

3.4.2.1

New components installed in the automatic control system shall be warranted for a period of one (1) year following the date of beneficial use. Any manufacturing defects to any equipment installed under this project that arise during his warranty period shall be corrected without cost to the Owner.

-- End of Section --

SECTION 15990

TESTING, ADJUSTING, AND BALANCING OF HVAC SYSTEMS

PART 1 GENERAL

1.1 REFERENCES

The publications listed below form a part of this specification to the extent referenced. The publications are referred to in the text by basic designation only.

ASSOCIATED AIR BALANCE COUNCIL (AABC)

AABC MN-1	(1989) National Standards for Testing and Balancing Heating, Ventilating, and Air Conditioning Systems

NATIONAL ENVIRONMENTAL BALANCING BUREAU (NEBB)

NEBB-01	(1991) Procedural Standards for Testing Adjusting Balancing of Environmental Systems

1.2 SUBMITTALS

Government approval is required for submittals with a "GA" designation; submittals having a "FIO" designation are for information only. The following shall be submitted in accordance with Section 01330 SUBMITTAL PROCEDURES:

SD-01 Data

TAB Related HVAC Submittals; FIO; GA.

A list of the TAB Related HVAC Submittals, no later than 7 days after the approval of the TAB Specialist.

SD-04 Drawings

TAB Schematic Drawings and Report Forms; GA.

Three copies of the TAB Schematic Drawings and Report Forms, no later than 21 days prior to the start of TAB field measurements.

SD-06 Instructions

TAB Procedures; GA.

Proposed procedures for TAB, submitted with the TAB Schematic Drawings and Report Forms.

SD-07 Schedules

Systems Readiness Check; FIO.

Proposed date and time to begin the Systems Readiness Check, no later than 7 days prior to the start of the Systems Readiness Check.

TAB Execution; GA.

Proposed date and time to begin field measurements, making adjustments, etc., for the TAB Report, submitted with the Systems Readiness Check Report.

TAB Verification; GA.

Proposed date and time to begin the TAB Verification, submitted with the TAB Report.

SD-08 Statements

TAB Firm; GA.

Certification of the proposed TAB Firm's qualifications by either AABC or NEBB to perform the duties specified herein and in other related Sections, no later than 21 days after the Notice to Proceed. The documentation shall include the date that the Certification was initially granted and the date that the current Certification expires. Any lapses in Certification of the proposed TAB Firm or disciplinary action taken by AABC or NEBB against the proposed TAB Firm shall be described in detail.

TAB Specialist; GA.

Certification of the proposed TAB Specialist's qualifications by either AABC or NEBB to perform the duties specified herein and in other related Sections, no later than 21 days after the Notice to Proceed. The documentation shall include the date that the Certification was initially granted and the date that the current Certification expires. Any lapses in Certification of the proposed TAB Specialist or disciplinary action taken by AABC or NEBB against the proposed TAB Specialist shall be described in detail.

Instrument Calibration; FIO.

List of each instrument to be used during TAB, stating calibration requirements required or recommended by both the TAB Standard and the instrument manufacturer and the actual calibration history of the instrument, submitted with the TAB Procedures. The calibration history shall include dates calibrated, the qualifications of the calibration laboratory, and the calibration procedures used.

SD-09 Reports

Design Review Report; GA.

A copy of the Design Review Report, no later than 14 days after approval of the TAB Firm and the TAB Specialist.

Systems Readiness Check Report; GA.

A copy of completed checklists for each system, each signed by the TAB Specialist, at least 7 days prior to the start of TAB Execution. All items in the Systems Readiness Check Report shall be signed by the TAB Specialist and shall bear the seal of the Professional Society or National Association used as the TAB Standard.

TAB Report; GA.

Three copies of the completed TAB Reports, no later that 7 days after the execution of TAB. All items in the TAB Report shall be signed by the TAB Specialist and shall bear the seal of the Professional Society or National Association used as the TAB Standard.

TAB Verification Report; GA.

Three copies of the completed TAB Verification Report, no later that 7 days after the execution of TAB Verification. All items in the TAB Verification Report shall be signed by the TAB Specialist and shall bear the seal of the Professional Society or National Association used as the TAB Standard.

SD-13 Certificates

Ductwork Leak Testing; FIO; GA.

A written statement signed by the TAB Specialist certifying that the TAB Specialist witnessed the Ductwork Leak Testing, it was successfully completed, and that there are no known deficiencies related to the ductwork installation that will prevent TAB from producing satisfactory results.

1.3 SIMILAR TERMS

In some instances, terminology differs between the Contract and the TAB Standard primarily because the intent of this Section is to use the industry standards specified, along with additional requirements listed herein to produce optimal results. The following table of similar terms is provided for clarification only. Contract requirements take precedent over the corresponding AABC or NEBB requirements where differences exist.

SIMILAR TERMS

Contract Term	AABC Term	NEBB Term
TAB Standard	National Standards for Testing and Balancing Heating, Ventilating, and Air Conditioning Systems	Procedural Standards for Testing Adjusting Balancing of Environmental Systems.
TAB Specialist	TAB Engineer	TAB Supervisor
Systems Readiness Check	Construction Phase Inspection	Field Readiness Check & Preliminary Field Procedures.

1.4 TAB STANDARD

TAB shall be performed in accordance with the requirements of the standard under which the TAB Firm's qualifications are approved, i.e., AABC MN-1or NEBB-01, unless otherwise specified herein. All recommendations and suggested practices contained in the TAB Standard shall be considered mandatory. The provisions of the TAB Standard, including checklists, report forms, etc., shall, as nearly as practical, be used to satisfy the Contract requirements. The TAB Standard shall be used for all aspects of

TAB, including qualifications for the TAB Firm and Specialist and calibration of TAB instruments. Where the instrument manufacturer calibration recommendations are more stringent than those listed in the TAB Standard, the manufacturer's recommendations shall be adhered to. All quality assurance provisions of the TAB Standard such as performance guarantees shall be part of this contract. For systems or system components not covered in the TAB Standard, TAB procedures shall be developed by the TAB Specialist. Where new procedures, requirements, etc., applicable to the Contract requirements have been published or adopted by the body responsible for the TAB Standard used (AABC or NEBB), the requirements and recommendations contained in these procedures and requirements shall be considered mandatory.

1.5 QUALIFICATIONS

1.5.1 TAB Firm

The TAB Firm shall be either a member of AABC or certified by the NEBB and certified in all categories and functions where measurements or performance are specified on the plans and specifications, including building systems commissioning and the measuring of sound and vibration in environmental systems. The certification shall be maintained for the entire duration of duties specified herein. If, for any reason, the firm loses subject certification during this period, the Contractor shall immediately notify the Contracting Officer and submit another TAB Firm for approval. Any firm that has been the subject of disciplinary action by either the AABC or the NEBB within the five years preceding Contract Award shall not be eligible to perform any duties related to the HVAC systems, including TAB. All work specified in this Section and in other related Sections to be performed by the TAB Firm shall be considered invalid if the TAB Firm loses its certification prior to Contract completion and must be performed by an approved successor.

1.5.2 TAB Specialist

The TAB Specialist shall be either a member of AABC or an experienced technician of the Firm certified by the NEBB. The certification shall be maintained for the entire duration of duties specified herein. If, for any reason, the Specialist loses subject certification during this period, the Contractor shall immediately notify the Contracting Officer and submit another TAB Specialist for approval. Any individual that has been the subject of disciplinary action by either the AABC or the NEBB within the five years preceding Contract Award shall not be eligible to perform any duties related to the HVAC systems, including TAB. All work specified in this Section and in other related Sections performed by the TAB Specialist shall be considered invalid if the TAB Specialist loses its certification prior to Contract completion and must be performed by the approved successor.

1.6 TAB SPECIALIST RESPONSIBILITIES

All TAB work specified herein and in related sections shall be performed under the direct guidance of the TAB Specialist. The TAB Specialist shall participate in the commissioning process specified in Section 15995 COMMISSIONING OF HVAC SYSTEMS.

PART 2 PRODUCTS (Not Applicable)

PART 3 EXECUTION

3.1 DESIGN REVIEW

The TAB Specialist shall review the Contract Plans and Specifications and advise the Contracting Officer of any deficiencies that would prevent the HVAC systems from effectively operating in accordance with the sequence of operation specified or prevent the effective and accurate TAB of the system. The TAB Specialist shall provide a Design Review Report individually listing each deficiency and the corresponding proposed corrective action necessary for proper system operation.

3.2 TAB RELATED HVAC SUBMITTALS

The TAB Specialist shall prepare a list of the submittals from the Contract Submittal Register that relate to the successful accomplishment of all HVAC TAB. The submittals identified on this list shall be accompanied by a letter of approval signed and dated by the TAB Specialist when submitted to the Government. The TAB Specialist shall also ensure that the location and details of ports, terminals, connections, etc., necessary to perform TAB are identified on the submittals.

3.3 TAB SCHEMATIC DRAWINGS AND REPORT FORMS

A schematic drawing showing each system component, including balancing devices, shall be provided for each system. Each drawing shall be accompanied by a copy of all report forms required by the TAB Standard used for that system. Where applicable, the acceptable range of operation or appropriate setting for each component shall be included on the forms or as an attachment to the forms. The schematic drawings shall identify all testing points and cross reference these points to the report forms and procedures.

3.4 DUCTWORK LEAK TESTING

The TAB Specialist shall witness the Ductwork Leak Testing specified in Section 15895 AIR SUPPLY, DISTRIBUTION, VENTILATION, AND EXHAUST SYSTEM and approve the results as specified in Paragraph TAB RELATED HVAC SUBMITTALS.

3.5 TESTING, ADJUSTING, AND BALANCING

3.5.1 TAB Procedures

Step by step procedures for each measurement required during TAB Execution shall be provided. The procedures shall be oriented such that there is a separate section for each system. The procedures shall include measures to ensure that each system performs as specified in all operating modes, interactions with other components (such as exhaust fans, kitchen hoods, fume hoods, relief vents, etc.) and systems, and with all seasonal operating differences, diversity, simulated loads, and pressure relationships required.

3.5.2 Systems Readiness Check

The TAB Specialist shall inspect each system to ensure that it is complete, including installation and operation of controls, and that all aspects of the facility that have any bearing on the HVAC systems, including installation of ceilings, walls, windows, doors, and partitions, are complete to the extent that TAB results will not be affected by any detail or touch-up work remaining. The TAB Specialist shall also verify that all

items such as ductwork and piping ports, terminals, connections, etc., necessary to perform TAB shall be complete during the Systems Readiness Check.

3.5.3 Preparation of TAB Report

Preparation of the TAB Report shall begin only when the Systems Readiness Report has been approved. The Report shall be oriented so that there is a separate section for each system. The Report shall include a copy of the appropriate approved Schematic Drawings and TAB Related Submittals, such as pump curves, fan curves, etc., along with the completed report forms for each system. The operating points measured during successful TAB Execution and the theoretical operating points listed in the approved submittals shall be marked on the performance curves and tables. Where possible, adjustments shall be made using an "industry standard" technique which would result in the greatest energy savings, such as adjusting the speed of a fan instead of throttling the flow. Any deficiencies outside of the realm of normal adjustments and balancing during TAB Execution shall be noted along with a description of corrective action performed to bring the measurement into the specified range. If, for any reason, the TAB Specialist determines during TAB Execution that any Contract requirement cannot be met, the TAB Specialist shall immediately provide a written description of the deficiency and the corresponding proposed corrective action necessary for proper system operation to the Contracting Officer.

3.5.4 TAB Verification

The TAB Specialist shall recheck ten percent of the measurements listed in the Tab Report and prepare a TAB Verification Report. The measurements selected for verification and the individuals that witness the verification will be selected by the Contracting Officer's Representative (COR). The measurements will be recorded in the same manner as required for the TAB Report. All measurements that fall outside the acceptable operating range specified shall be accompanied by an explanation as to why the measurement does not correlate with that listed in the TAB Report and a description of corrective action performed to bring the measurement into the specified range. If over 20 percent of the measurements selected by the COR for verification fall outside of the acceptable operating range specified, the COR will select an additional ten percent for verification. If over 20 percent of the total tested (including both test groups) fall outside of the acceptable range, the TAB Report shall be considered invalid and all contract TAB work shall be repeated beginning with the Systems Readiness Check.

3.5.5 Marking of Setting

Following approval of TAB Verification Report, the setting of all HVAC adjustment devices including valves, splitters, and dampers shall be permanently marked by the TAB Specialist so that adjustment can be restored if disturbed at any time.

3.5.6 Identification of Test Ports

The TAB Specialist shall permanently and legibly identify the location points of duct test ports. If the ductwork has exterior insulation, the identification shall be made on the exterior side of the insulation. All penetrations through ductwork and ductwork insulation shall be sealed to prevent air leakage or to maintain integrity of vapor barrier.

-- End of Section --

SECTION 15995

COMMISSIONING OF HVAC SYSTEMS

PART 1 GENERAL

1.1 SUBMITTALS

Government approval is required for submittals with a "GA" designation; submittals with "FIO" designation are for information only. The following shall be submitted in accordance with Section 01330 SUBMITTAL PROCEDURES:

SD-01 Data

Commissioning Team; GA.

List of team members who will represent the Contractor in the pre-commissioning checks and functional performance testing, at least 2 weeks prior to the start of pre-commissioning checks. Proposed revision to the list, prior to the start of the impacted work.

SD-06 Instructions

Test Procedures; GA.

Detailed procedures for pre-commissioning checks and functional performance tests, at least 4 weeks prior to the start of pre-commissioning checks.

SD-07 Schedules

Test Schedule; GA.

Schedule for pre-commissioning checks and functional performance tests, at least 2 weeks prior to the start of pre-commissioning checks.

SD-09 Reports

Test Reports; GA.

Completed pre-commissioning checklists and functional performance test checklists organized by system and by subsystem and submitted as one package. The results of failed tests shall be included along with a description of the corrective action taken.

1.2 SEQUENCING AND SCHEDULING

The work described in this Section shall begin only after all work required in related Sections, including Section 15951 DIRECT DIGITAL CONTROL FOR HVAC SYSTEMS and Section 15990 TESTING, ADJUSTING AND BALANCING OF HVAC SYSTEMS, has been successfully completed, and all test and inspection reports and operation and maintenance manuals required in these Sections have been submitted and approved.

PART 2 PRODUCTS (Not Applicable)

PART 3 EXECUTION

3.1 COMMISSIONING TEAM AND CHECKLISTS

The Contractor shall designate team members to participate in the pre-commissioning checks and the functional performance testing specified herein. In addition, the Government will be represented by a representative of the Contracting Officer, the Design Agent's Representative, and the Using Agency. The team members shall be as follows:

Designation	Function
Q	Contractor's Chief Quality Control Representative
M	Contractor's Mechanical Representative
E	Contractor's Electrical Representative
T	Contractor's Testing, Adjusting, and Balancing Representative
C	Contractor's Controls Representative
D	Design Agent's Representative
O	Contracting Officer's Representative
U	Using Agency's Representative

Each checklist shown in appendices A and B shall be completed by the commissioning team. Acceptance by each commissioning team member of each pre-commissioning checklist item shall be indicated by initials and date unless an "X" is shown indicating that participation by that individual is not required. Acceptance by each commissioning team member of each functional performance test checklist shall be indicated by signature and date.

3.2 TESTS

The pre-commissioning checks and functional performance tests shall be performed in a manner which essentially duplicates the checking, testing, and inspection methods established in the related Sections. Where checking, testing, and inspection methods are not specified in other Sections, methods shall be established which will provide the information required. Testing and verification required by this section shall be performed during the Commissioning phase. Requirements in related Sections are independent from the requirements of this Section and shall not be used to satisfy any of the requirements specified in this Section. The Contractor shall provide all materials, services, and labor required to perform the pre-commissioning checks and functional performance tests. A pre-commissioning check or functional performance test shall be aborted if any system deficiency prevents the successful completion of the test or if any participating non-Government commissioning team member of which participation is specified is not present for the test. The Contractor shall reimburse the Government for all costs associated with effort lost due to tests that are aborted. These costs shall include salary, travel costs and per diem (where applicable) for Government commissioning team members.

3.2.1 Pre-Commissioning Checks

Pre-commissioning checks shall be performed for the items indicated on the checklists in Appendix A. Deficiencies discovered during these checks shall be corrected and retested in accordance with the applicable contract requirements.

3.2.2 Functional Performance Tests

Functional performance tests shall be performed for the items indicated on the checklists in Appendix B. Functional performance tests shall begin only after all pre-commissioning checks have been successfully completed. Tests shall prove all modes of the sequences of operation, and shall verify all other relevant contract requirements. Tests shall begin with equipment or components and shall progress through subsystems to complete systems. Upon failure of any functional performance test checklist item, the Contractor shall correct all deficiencies in accordance with the applicable contract requirements. The checklist shall then be repeated until it has been completed with no errors.

APPENDIX A

PRE-COMMISSIONING CHECKLISTS

Pre-commissioning checklist - Piping

For Gas Piping System

Checklist Item	Q	M	E	T	C	D	O	U
Installation								
a. Piping complete.	___	___	X	___	X	___	___	___
b. As-built shop drawings submitted.	___	___	X	___	X	___	___	___
c. Piping flushed and cleaned.	___	___	X	___	X	___	___	___
d. Strainers cleaned.	___	___	X	___	X	___	___	___
e. Valves installed as required.	___	___	X	___	X	___	___	___
f. Piping insulated as required.	___	___	X	___	X	___	___	___
g. Verify operation of valves.	___	___	X	___	___	___	___	___
h. Verify that piping has been labeled and valves identified as specified.	___	___	X	___	___	___	___	___
Testing, Adjusting, and Balancing (TAB)								
a. Hydrostatic test complete.	___	___	X	___	X	___	___	___
b. TAB operation complete.	___	___	X	___	___	___	___	___

Pre-commissioning Checklist - DX Air Cooled Condensing Unit

For Condensing Unit: ACCU1 AND ACCU2

Checklist Item	Q	M	E	T	C	D	O	U
Installation	___	___	X	X	X	___	___	___
b. Refrigerant pipe leak tested.	___	___	X	X	X	___	___	___
c. Refrigerant pipe evacuated and charged in accordance with manufacturer's instructions.	___	___	X	X	X	___	___	___
d. Check condenser fans for proper rotation.	___	___	X	___	X	___	___	___
e. Any damage to coil fins has been repaired.	___	___	X	___	X	___	___	___
f. Manufacturer's required maintenance/ operational clearance provided.	___	___	X	X	X	___	___	___
Electrical								
a. Power available to unit disconnect.	___	___	___	X	X	___	___	___
b. Power available to unit control panel.	___	___	___	X	___	___	___	___
c. Verify that power disconnect is located within sight of the unit it controls	___	___	___	X	___	___	___	___
Controls								
a. Unit safety/protection devices tested.	___	___	X	X	___	___	___	___
b. Control system and interlocks installed.	___	___	X	X	___	___	___	___
c. Control system and interlocks operational.	___	___	X	X	___	___	___	___

Pre-commissioning Checklist - Unit Heater

For Unit Heater: GUH1-4

Checklist Item	Q	M	E	T	C	D	O	U
Installation								
a. Gas piping properly connected.	___	___	X	___	___	___	___	___
b. Gas piping pressure tested.	___	___	X	___	___	___	___	___
c. Any damage to coil fins has been repaired	___	___	X	___	X	___	___	___
d. Manufacturer's required maintenance/ operational clearance provided.	___	___	X	X	X	___	___	___
Electrical								
a. Power available to unit disconnect.	___	___	___	X	___	___	___	___
b. Proper motor rotation verified.	___	___	___	X	X	___	___	___
c. Verify that power disconnect is located within sight of the unit it controls.	___	___	___	X	___	___	___	___
d. Power available to electric heating coil.	___	___	___	X	___	___	___	___
Controls								
a. Control valves properly installed.	___	___	X	___	___	___	___	___
b. Control valves operable.	___	___	X	X	___	___	___	___
c. Verify proper location and installation of thermostat.	___	___	X	___	___	___	___	___
Testing, Adjusting, and Balancing (TAB)								
a. TAB Report submitted.	___	___	X	___	X	___	___	___

Pre-commissioning Checklist - Ductwork

For Air Handlers: AHU-1 and AHU-2

Checklist Item	Q	M	E	T	C	D	O	U
Installation								
a. Ductwork complete.	___	___	X	___	X	___	___	___
b. As-built shop drawings submitted.	___	___	X	___	X	___	___	___
c. Ductwork leak test complete.	___	___	X	___	X	___	___	___

NOTE: The first bracketed item d will be used for Army projects, the second for Air Force projects.

d. Fire dampers, smoke dampers, and access doors installed as required with installation of each verified by the specified team members initialing each location on a copy of the as-built drawings.	___	___	X	___	X	___	___	___
e. Ductwork insulated as required.	___	___	X	___	X	___	___	___
f. Thermometers and gauges installed as required.	___	___	___	___	___	___	___	___
g. Verify open/closed status of dampers.	___	___	X	___	X	___	___	___
h. Verify smoke dampers operation.	___	___	X	___	___	___	___	___
i. Flexible connectors installed as specified	___	___	X	___	X	___	___	___
Testing, Adjusting, and Balancing (TAB)								
a. TAB operation complete.	___	___	X	___	X	___	___	___

Pre-commissioning Checklist - Exhaust Fan

For Exhaust Fan: EF-1 thru EF-10

Checklist Item	Q	M	E	T	C	D	O	U
Installation								
a. Fan belt adjusted.	___	___	X	___	X	___	___	___
Electrical								
a. Power available to fan disconnect.	___	___	___	X	___	___	___	___
b. Proper motor rotation verified.	___	___	___	___	X	___	___	___
c. Verify that power disconnect is located within sight of the unit it controls.	___	___	___	X	___	___	___	___
Controls								
a. Control interlocks properly installed.	___	___	___	X	___	___	___	___
b. Control interlocks operable.	___	___	___	X	___	___	___	___
c. Dampers/actuators properly installed.	___	___	X	___	___	___	___	___
d. Dampers/actuators operable.	___	___	X	___	___	___	___	___
e. Verify proper location and installation of thermostat.	___	___	X	___	___	___	___	___
Testing, Adjusting, and Balancing (TAB)								
a. TAB results +10%/-0% to L/s shown on drawings	___	___	X	___	X	___	___	___
b. TAB Report submitted.	___	___	X	___	X	___	___	___

Pre-commissioning Checklist - HVAC System Controls

For HVAC System: AHU-1 and AHU-2

Checklist Item	Q	M	E	T	C	D	O	U
Installation								
a. As-built shop drawings submitted.	___	___	X	X	___	___	___	___
b. Layout of control panel matches drawings.	___	___	X	X	___	___	___	___
c. Framed instructions mounted in or near control panel.	___	___	X	X	___	___	___	___
d. Components properly labeled (on inside and outside of panel).	___	___	X	X	___	___	___	___
e. Control components piped and/or wired to each labeled terminal strip.	___	___	X	X	___	___	___	___
f. EMCS connection made to each labeled terminal strip as shown.	___	___	X	X	___	___	___	___
g. Control wiring and tubing labeled at all terminations, splices, and junctions.	___	___	X	X	___	___	___	___
h. Shielded wiring used on electronic sensors	___	___	X	X	___	___	___	___
Main Power and Control Air								
a. 110 volt AC power available to panel.	___	___	___	X	___	___	___	___
Testing, Commissioning, and Balancing								
a. Testing, Commissioning, and Balancing Report submitted.	___	___	X	___	___	___	___	___

Pre-commissioning Checklist - Single Zone Air Handling Unit

For Air Handling Unit: AHU-1 and AHU-2

Checklist Item	Q	M	E	T	C	D	O	U
Installation								
a. Vibration isolation devices installed.	___	___	X	X	X	___	___	___
b. Inspection and access doors are operable and sealed.	___	___	X	___	X	___	___	___
c. Casing undamaged.	___	___	X	X	X	___	___	___
d. Insulation undamaged.	___	___	X	X	X	___	___	___
e. Condensate drainage is unobstructed.	___	___	X	X	X	___	___	___
f. Fan belt adjusted.	___	___	X	___	X	___	___	___
g. Any damage to coil fins has been repaired	___	___	X	___	X	___	___	___
h. Manufacturer's required maintenance clearance provided.	___	___	X	X	X	___	___	___
Electrical								
a. Power available to unit disconnect.	___	___	___	X	X	___	___	___
b. Power available to unit control panel.	___	___	___	X	___	___	___	___
c. Proper motor rotation verified.	___	___	___	___	X	___	___	___
d. Verify that power disconnect is located within sight of the unit it controls.	___	___	___	X	___	___	___	___
e. Power available to electric heating coil.	___	___	___	X	___	___	___	___
Coils								
a. Refrigerant piping properly connected.	___	___	X	X	X	___	___	___
b. Refrigerant piping pressure tested.	___	___	X	X	X	___	___	___
c. Any damage to coil fins has been repaired.	___	___	X	___	X	___	___	___
Controls								
a. Control valves/actuators properly installed.	___	___	X	___	___	___	___	___
b. Control valves/actuators operable.	___	___	X	___	___	___	___	___
c. Dampers/actuators properly installed.	___	___	X	___	___	___	___	___
d. Dampers/actuators operable.	___	___	X	___	___	___	___	___

Pre-commissioning Checklist - Single Zone Air Handling Unit

For Air Handling Unit: AHU-1 and AHU-2

Checklist Item	Q	M	E	T	C	D	O	U
e. Verify proper location and installation of thermostat.	___	___	X	___	___	___	___	___
Testing, Adjusting, and Balancing (TAB)								
a. Construction filters removed and replaced.	___	___	X	___	X	___	___	___
b. TAB results +10%/-0% L/s shown on drawings.	___	___	X	___	X	___	___	___
c. TAB Report submitted.	___	___	X	___	X	___	___	___

Pre-commissioning Checklist - Make Up Air Handling Unit

For Air Handling Unit: MUA-1 and MUA-2

Checklist Item	Q	M	E	T	C	D	O	U
Installation								
a. Vibration isolation devices installed.	__	___	X	X	X	___	___	___
b. Inspection and access doors are operable and sealed.	__	___	X	___	X	___	___	___
c. Casing undamaged.	__	___	X	X	X	___	___	___
d. Insulation undamaged.	__	___	X	X	X	___	___	___
e. Condensate drainage is unobstructed.	__	___	X	X	X	___	___	___
f. Fan belt adjusted.	__	___	X	___	X	___	___	___
g. Any damage to heat exchanger has been repaired.	__	___	X	___	X	___	___	___
h. Manufacturer's required maintenance clearance provided.	__	___	X	X	X	___	___	___
Electrical								
a. Power available to unit disconnect.	__	___	___	X	X	___	___	___
b. Power available to unit control panel.	__	___	___	X	___	___	___	___
c. Proper motor rotation verified.	___	___	___	__	X	___	___	___
d. Verify that power disconnect is located within sight of the unit it controls.	___	___	__	X	___	___	___	___
HX								
a. Gas piping properly connected.	___	___	X	__	___	___	___	___
b. Gas piping pressure tested.	___	___	X	X	X	___	___	___
c. Gas piping pressure tested.	___	___	X	X	__	___	___	___
f. Any damage to heat exchanger has been repaired.	___	___	X	___	X	___	___	___
Controls								
a. Control valves/actuators properly installed.	___	___	X	___	___	___	___	___
b. Control valves/actuators operable.	___	___	X	___	___	___	___	___
c. Dampers/actuators properly installed.	___	___	X	___	___	___	___	___

Pre-commissioning Checklist - Make Up Air Handling Unit

For Air Handling Unit: MUA-1 and MUA-2

Checklist Item	Q	M	E	T	C	D	O	U
d. Dampers/actuators operable.	___	___	X	___	___	___	___	___
e. Verify proper location and installation of thermostat.	___	___	X	___	___	___	___	___
Testing, Adjusting, and Balancing (TAB)								
a. Construction filters removed and replaced.	___	___	X	___	X	___	___	___
b. TAB results +10%/-0% L/s shown on drawings.	___	___	X	___	X	___	___	___
c. TAB Report submitted.	___	___	X	___	X	___	___	___

APPENDIX B

FUNCTIONAL PERFORMANCE TESTS CHECKLISTS

Functional Performance Test Checklist - Single Zone Air Handling Unit

For Air Handling Unit: AHU-1 and AHU-2

a. The following shall be verified when the supply fan off mode is initiated:

(1) All dampers in normal position. _____

(2) All valves in normal position. _____

(3) Fan de-energizes. _____

b. Verify cooling coil and heating coil operation by varying thermostat set point from cooling set point to heating set point and returning to cooling set point. _____

c. Verify safety shut down initiated by smoke detectors. _____

d. Verify safety shut down initiated by low temperature protection thermostat. _____

2. Certification: We the undersigned have witnessed the above functional performance tests and certify that the item tested has met the performance requirements in this section of the specifications.

Signature and Date

Contractor's Chief Quality Control Representative _____

Contractor's Mechanical Representative _____

Contractor's Electrical Representative _____

Contractor's Testing, Adjusting and Balancing Representative _____

Contractor's Controls Representative _____

Contracting Officer's Representative _____

Using Agency's Representative _____

Functional Performance Test Checklist - Air Cooled Condensing Unit

For Condensing Unit: ACCU-1 and ACCU-2

1. Functional Performance Test: Contractor shall demonstrate operation of refrigeration system as per specifications including the following: Start building air handler to provide load for condensing unit. Activate controls system start sequence as follows.

a. Start air handling unit. Verify control system energizes condensing unit start sequence. _____

b. Shut off air handling equipment to verify condensing unit de-energizes. _____

c. Restart air handling equipment one minute after condensing unit shut down. Verify condensing unit restart sequence. _____

2. Verify condensing unit amperage each phase and voltage phase to phase and phase to ground.

	PHASE 1	PHASE 2	PHASE 3
Amperage	_____	_____	_____
Voltage	_____	_____	
Voltage	_____		
Voltage to ground	_____	_____	_____

3. Record the following information:

Ambient dry bulb temperature	_____	degrees C
Ambient wet bulb temperature	_____	degrees C
Suction pressure	_____	kPa gauge
Discharge pressure	_____	kPa gauge

4. Unusual vibration, noise, etc.

_____

_____

5. Certification: We the undersigned have witnessed the above functional performance tests and certify that the item tested has met the performance requirements in this section of the specifications.

Signature and Date

Contractor's Chief Quality Control Representative _____

Contractor's Mechanical Representative _____

Contractor's Electrical Representative Representative _____

Contractor's Testing, Adjusting and Balancing _____

Contractor's Controls Representative _____

Contracting Officer's Representative _____

Functional Performance Test Checklist - Air Cooled Condensing Unit

For Condensing Unit: ACCU-1 and ACCU-2
Using Agency's Representative _____

Functional Performance Test Checklist - Unit Heaters - GUH1-4

The Contracting Officer will select unit heaters to be spot-checked during the functional performance test. The number of terminals shall not exceed 10 percent.

1. Functional Performance Test: Contractor shall demonstrate operation of selected unit heaters as per specifications including the following:

a. Verify unit heater response to room temperature set point adjustment. Changes to be heating set point to heating set point minus 10 degrees and return to heating set point. _____

b. Check blower fan speed. _____rpm

c. Check heating mode inlet air temperature. _____ degrees C Check heating mode inlet air temperature.

d. Check heating mode outlet air temperature. _____ degrees C Check heating mode outlet air temperature.

2. Certification: We the undersigned have witnessed the above functional performance tests and certify that the item tested has met the performance requirements in this section of the specifications.

Signature and Date

Contractor's Chief Quality Control Representative _____

Contractor's Mechanical Representative _____

Contractor's Electrical Representative _____

Contractor's Testing, Adjusting and Balancing Representative _____

Contractor's Controls Representative _____

Contracting Officer's Representative _____

Using Agency's Representative _____

Functional Performance Test Checklist - HVAC Controls

For HVAC System: AHU-1 and AHU-2

The Contracting Officer will select HVAC control systems to undergo functional performance testing. The number of systems shall not exceed 2.

1. Functional Performance Test: Contractor shall verify operation of HVAC controls by performing the following tests:

a. Verify that controller is maintaining the set point by manually measuring the controlled variable with a thermometer, sling psychrometer, inclined manometer, etc.

b. Verify sensor/controller combination by manually measuring the controlled medium. Take readings from control panel display and compare readings taken manually. Record all readings.

Sensor _____
Manual measurement _____
Panel reading value _____

c. Verify system stability by changing the controller set point as follows:

(1) Air temperature - 10 degrees F

(2) Water temperature - 10 degrees F

(3) Static pressure - 10 percent of set point

(4) Relative humidity - percent (RH)

The control system shall be observed for 10 minutes after the change in set point. Instability or excessive hunting will be unacceptable.

d. Verify interlock with other HVAC controls.

e. Verify interlock with fire alarm control panel.

f. Verify interlock with EMCS.

g. Change controller set point 10 percent with EMCS and verify correct response.

2. Verify that operation of control system conforms to that specified in the sequence of operation.

3. Certification: We the undersigned have witnessed the above functional performance tests and certify that the item tested has met the performance requirements in this section of the specifications.

Signature and Date

Contractor's Chief Quality Control Representative _____

Contractor's Mechanical Representative _____

Contractor's Electrical Representative _____

Functional Performance Test Checklist - HVAC Controls

For HVAC System: AHU-1 and AHU-2

Contractor's Testing, Adjusting and Balancing Representative _____

Contractor's Controls Representative _____

Contractor's Officer's Representative _____

Using Agency's Representative _____

-- End of Section --

SECTION 16370

ELECTRICAL DISTRIBUTION SYSTEM, AERIAL

PART 1 GENERAL

1.1 REFERENCES

The publications listed below form a part of this specification to the extent referenced. The publications are referred to in the text by basic designation only.

AMERICAN NATIONAL STANDARDS INSTITUTE (ANSI)

ANSI C29.2	(1992) Insulators - Wet-Process Porcelain and Toughened Glass - Suspension Type
ANSI C29.3	(1986; R 1995) Wet Process Porcelain Insulators - Spool Type
ANSI C29.4	(1989; R 1995) Wet-Process Porcelain Insulators - Strain Type
ANSI C29.5	(1984; R 1995) Wet-Process Porcelain Insulators - Low- and Medium-Voltage Types
ANSI C29.6	(1996) Wet-Process Porcelain Insulators - High-Voltage Pin Type
ANSI C29.8	(1985; R 1995) Wet-Process Porcelain Insulators - Apparatus, Cap and Pin Type
ANSI C29.9	(1983; R 1996) Wet-Process Porcelain Insulators - Apparatus, Post-Type
ANSI C135.1	(1979) Galvanized Steel Bolts and Nuts for Overhead Line Construction
ANSI C135.2	(1987) Threaded Zinc-Coated Ferrous Strand-Eye Anchor Rods and Nuts for Overhead Line Construction
ANSI C135.4	(1987) Zinc-Coated Ferrous Eyebolts and Nuts for Overhead Line Construction
ANSI C135.14	(1979) Staples with Rolled or Slash Points for Overhead Line Construction
ANSI C135.22	(1988) Zinc-Coated Ferrous Pole-Top Insulator Pins with Lead Threads for Overhead Line Construction
ANSI O5.1	(1992) Specifications and Dimensions for Wood Poles

AMERICAN SOCIETY FOR TESTING AND MATERIALS (ASTM)

ASTM A 123	(1989a) Zinc (Hot-Dip Galvanized) Coatings on Iron and Steel Products
ASTM A 153	(1996) Zinc Coating (Hot-Dip) on Iron and Steel Hardware
ASTM A 475	(1995) Zinc-Coated Steel Wire Strand
ASTM A 575	(1989) Steel Bars, Carbon, Merchant Quality, M-Grades
ASTM A 576	(1990b; R 1995) Steel Bars, Carbon, Hot-Wrought, Special Quality
ASTM B 1	(1995) Hard-Drawn Copper Wire
ASTM B 8	(1995) Concentric-Lay-Stranded Copper Conductors, Hard, Medium-Hard, or Soft
ASTM B 117	(1997) Operating Salt Spray (FOG) Apparatus
ASTM B 232	(1992) Concentric-Lay-Stranded Aluminum Conductors, Coated-Steel Reinforced (ACSR)
ASTM D 1654	(1992) Evaluation of Painted or Coated Specimens Subjected to Corrosive Environment

AMERICAN WOOD-PRESERVERS' ASSOCIATION (AWPA)

AWPA C25	(1995) Sawn Crossarms - Preservative Treatment by Pressure Processes

INSTITUTE OF ELECTRICAL AND ELECTRONIC ENGINEERS (IEEE)

IEEE C2	(1997) National Electrical Safety Code
IEEE ANSI/IEEE C57.19.00	(1991; R 1997) IEEE Standard General Requirements and Test Procedures for Outdoor Power Apparatus Bushings
IEEE ANSI/IEEE C57.19.01	(1991; R 1997) IEEE Standard Performance Characteristics and Dimensions for Outdoor Apparatus Bushings
IEEE C62.1	(1989; R 1994) Surge Arresters for AC Power Circuits
IEEE C62.2	(1987; R 1994) Guide for the Application of Gapped Silicon-Carbide Surge Arresters for Alternating Current Systems
IEEE C62.11	(1993) IEEE Standard Metal-Oxide Surge Arresters for AC Power Circuits
IEEE Std 81	(1983) Guide for Measuring Earth Resistivity, Ground Impedance, and Earth Surface Potentials of a Ground System (Part

1)

IEEE Std 100	(1996) IEEE Standard Dictionary of Electrical and Electronics Terms

NATIONAL ELECTRICAL MANUFACTURERS ASSOCIATION (NEMA)

NEMA HV 2	(1991) Application Guide for Ceramic Suspension Insulators
NEMA LA 1	(1992) Surge Arresters
NEMA SG 2	(1993) High Voltage Fuses

NATIONAL FIRE PROTECTION ASSOCIATION (NFPA)

NFPA 70	(1999) National Electrical Code

UNDERWRITERS LABORATORIES (UL)

UL 467	(1993; Rev thru Aug 1996) Grounding and Bonding Equipment
UL 486A	(1997) Wire Connectors and Soldering Lugs for Use with Copper Conductors
UL 486B	(1997; Rev Jun 1997) Wire Connectors for Use with Aluminum Conductors

1.2 GENERAL REQUIREMENTS

1.2.1 Terminology

Terminology used in this specification is as defined in IEEE Std 100.

1.3 SUBMITTALS

Government approval is required for submittals with a "GA" designation; submittals having an "FIO" designation are for information only. The following shall be submitted in accordance with Section 01330 SUBMITTAL PROCEDURES:

SD-01 Data

Manufacturer's Catalog; GA.

Catalog cuts, brochures, circulars, specifications, product data, and printed information in sufficient detail and scope to verify compliance with the requirements of the contract documents.

SD-04 Drawings

As-Built Drawings; FIO.

The as-built drawings shall be a record of the construction as installed. The drawings shall include the information shown on the contract drawings as well as deviations, modifications, and changes from the contract drawings, however minor. The as-built drawings shall be kept at the job site and updated daily. The as-built drawings shall be a full sized set of

prints marked to reflect deviations, modifications, and changes. The as-built drawings shall be complete and show the location, dimensions, part identification, and other information. Additional sheets may be added. The as-built drawings shall be jointly inspected for accuracy and completeness by the Contractor's quality control representative and by the Contracting Officer prior to the submission of each monthly pay estimate. Upon completion of the work, the Contractor shall submit three full sized sets of the marked prints to the Contracting Officer for approval. If upon review, the as-built drawings are found to contain errors and/or omissions, they will be returned to the Contractor for correction. The Contractor shall correct and return the as-built drawings to the Contracting Officer for approval within ten calendar days from the time the drawings are returned to the Contractor.

1.4 DELIVERY, STORAGE, AND HANDLING

Devices and equipment shall be visually inspected by the Contractor when received and prior to acceptance from conveyance. Stored items shall be protected from the environment in accordance with the manufacturer's published instructions. Damaged items shall be replaced. Oil filled transformers and switches shall be stored in accordance with the manufacturer's requirements. Wood poles held in storage for more than 2 weeks shall be stored in accordance with ANSI O5.1. Handling of wood poles shall be in accordance with ANSI O5.1, except that pointed tools capable of producing indentations more than inch in depth shall not be used. Metal poles shall be handled and stored in accordance with the manufacturer's instructions.

1.5 EXTRA MATERIALS

One additional spare fuse or fuse element for each furnished fuse or fuse element shall be delivered to the Contracting Officer when the electrical system is accepted. Two complete sets of all special tools required for maintenance shall be provided, complete with a suitable tool box. Special tools are those that only the manufacturer provides, for special purposes (to access compartments, or operate, adjust, or maintain special parts).

PART 2 PRODUCTS

2.1 GENERAL REQUIREMENTS

Products shall conform to the following requirements. Items of the same classification shall be identical including equipment, assemblies, parts, and components.

2.2 STANDARD PRODUCT

Material and equipment shall be the standard product of a manufacturer regularly engaged in the manufacture of the product and shall essentially duplicate items that have been in satisfactory use for at least 2 years prior to bid opening.

2.3 NAMEPLATES

2.3.1 General

Each major component shall have the manufacturer's name, address, type or style, model or serial number, and catalog number on a nameplate securely attached to the equipment. Equipment containing liquid-dielectrics shall

have the type of dielectric on the nameplate. Nameplates shall be made of noncorrosive metal. As a minimum, nameplates shall be provided for transformers, regulators, circuit breakers, capacitors, meters and switches.

2.4 CORROSION PROTECTION

2.4.1 Aluminum Materials

Aluminum shall not be used in contact with earth or concrete. Where aluminum conductors are connected to dissimilar metal, fittings conforming to UL 486B shall be used.

2.4.2 Ferrous Metal Materials

2.4.2.1 Hardware

Ferrous metal hardware shall be hot-dip galvanized in accordance with ASTM A 153 and ASTM A 123.

2.4.2.2 Equipment

Equipment and component items, including but not limited to transformers and ferrous metal luminaires not hot-dip galvanized or porcelain enamel finished, shall be provided with corrosion-resistant finishes which shall withstand 120 hours of exposure to the salt spray test specified in ASTM B 117 without loss of paint or release of adhesion of the paint primer coat to the metal surface in excess of 1.6 mm (1/16 inch) from the test mark. The described test mark and test evaluation shall be in accordance with ASTM D 1654 with a rating of not less than 7 in accordance with TABLE 1, (procedure A). Cut edges or otherwise damaged surfaces of hot-dip galvanized sheet steel or mill galvanized sheet steel shall be coated with a zinc rich paint conforming to the manufacturer's standard.

2.4.3 Finishing

Painting required for surfaces not otherwise specified and finish painting of items only primed at the factory shall be as specified in Section 09900 PAINTING, GENERAL.

2.5 CONDUCTORS, CONNECTORS, AND SPLICES

2.5.1 Aluminum-Composition Conductors

Aluminum-conductor-steel-reinforced, ACSR, shall comply with ASTM B 232.

2.5.2 Copper Conductors

Hard-drawn-copper conductors shall comply with ASTM B 1 and ASTM B 8 as appropriate for the conductor size.

2.5.3 Connectors and Splices

Connectors and splices shall be of copper alloys for copper conductors, aluminum alloys for aluminum-composition conductors, and a type designed to minimize galvanic corrosion for copper to aluminum-composition conductors. Aluminum-composition and aluminum-composition to copper shall comply with UL 486B, and copper-to-copper shall comply with UL 486A.

2.6 MEDIUM-VOLTAGE LINES

2.6.1 Bare Medium-Voltage Lines

Bare medium-voltage line conductors shall be aluminum-conductor-steel-reinforced, ACSR. Conductor types shall not be mixed on any project, unless specifically indicated. Conductors larger than No. 2 AWG shall be stranded.

2.7 NOT USED

2.8 POLES AND HARDWARE

2.8.1 NOT USED

2.8.2 NOT USED

2.8.3 NOT USED

2.8.4 Pole Line Hardware

Zinc-coated hardware shall comply with ANSI C135.1, ANSI C135.2, ANSI C135.4, ANSI C135.14 ANSI C135.22. Steel hardware shall comply with ASTM A 575 and ASTM A 576. Hardware shall be hot-dip galvanized in accordance with ASTM A 153. Pole-line hardware shall be hot-dip galvanized steel. Washers shall be installed under boltheads and nuts on wood surfaces and elsewhere as required. Washers used on through-bolts and double-arming bolts shall be approximately 57.2 mm square and 4.8 mm (3/16 inch) thick. The diameter of holes in washers shall be the correct standard size for the bolt on which a washer is used. Washers for use under heads of carriage-bolts shall be of the proper size to fit over square shanks of bolts. Eye bolts, bolt eyes, eyenuts, strain-load plates, lag screws, guy clamps, fasteners, hooks, shims, and clevises shall be used wherever required to support and to protect poles, brackets, crossarms, guy wires, and insulators.

2.8.5 NOT USED

2.8.6 Guy Assemblies

Guy assemblies shall be zinc-coated steel in accordance with ASTM A 475. Guy assemblies, including insulators and attachments, shall provide a strength exceeding the required guy strength. Three-eye thimbles shall be provided on anchor rods to permit attachment of individual primary, secondary, and communication down guys. Anchors shall provide adequate strength to support all loads. Guy strand shall be 7 strand. Guy material shall be Class A zinc-coated-steel utilities grade or aluminum-clad-steel-strand, with a minimum breaking strength not less than 26.7 kN (6000 pounds), except where two or more guys are used to provide the required strength. Guy rods shall be not less than 2.4 m (8 feet) in length by 19.1 mm (3/4 inch) in diameter.

2.9 INSULATORS

Insulators shall comply with NEMA HV 2 for general requirements. Suspension insulators shall be used at corners, angles, dead-ends, other areas where line insulators do not provide adequate strength, and as indicated. Mechanical strength of suspension insulators and hardware shall exceed the rated breaking strength of the attached conductors.

2.9.1 Medium-Voltage Line Insulators

Medium-voltage line insulators shall comply with ANSI C29.2, ANSI C29.5, and ANSI C29.6, and as applicable. Ratings shall not be lower than the ANSI classes indicated in TABLE I. Pin insulators for use on voltages in excess of 6 kV phase-to-phase shall be radio-interference-freed.

TABLE I

MINIMUM ANSI RATING OF MEDIUM-VOLTAGE INSULATORS BY CLASS

Voltage Level	Line-Post	Pin	Suspension
Up to 5 kV	57-1 or 11	55-3	One 52-1
	57-1 or 11	55-5	Two 52-1
6 kV to 15 kV	57-1 or 11	55-5	Two 52-2
	57-2 or 12	56-3	Two 52-3 or 4
16 kV to 25 kV	57-2 or 12	56-3	Two 52-3 or 4
	57-3 or 13	56-4	Three 52-3 or 4
26 kV to 35 kV	57-3 or 13	56-4	Three 52-3 or 4
	57-4 or 14	56-5	Four 52-3 or 4

2.9.2 Low-Voltage Line Insulators

Low-voltage line insulators shall comply with ANSI C29.2 and ANSI C29.3 as applicable. Spool insulators for use on low-voltage lines shall be mounted on clevis attachments or secondary racks and shall be not smaller than Class 53-2. For No. 4/0 AWG and larger conductors, Class 53-4 shall be used. Suspension insulators on clevis attachments used at dead-ends shall be not smaller than Class 52-1.

2.9.3 Strain Insulators for Guy Wires

Strain insulators for use in insulated guy assemblies shall comply with ANSI C29.4 for porcelain or equivalent fiberglass, and shall have a mechanical strength exceeding the rated breaking strength of the attached guy wire. Insulators shall be not smaller than Class 54-3 for lines of 6 kV to 15 kV.

2.9.4 Apparatus Insulators

Apparatus insulators shall comply with IEEE ANSI/IEEE C57.19.00, IEEE ANSI/IEEE C57.19.01, ANSI C29.8, and ANSI C29.9 as applicable.

2.10 CROSSARM ASSEMBLIES

2.10.1 Crossarms

Crossarms shall comply with RUS REA Bulletin 1728H-701 and shall be solid wood, distribution type, except cross-sectional area with pressure treatment conforming to AWPA C25, and a 6.4 mm (1/4 inch), 45 degree chamfer on all top edges. Cross-sectional area minimum dimensions shall be 108.0 mm (4-1/4 inches) in height by 82.6 mm (3-1/4 inches) in depth in accordance with IEEE C2 for Grade B construction. Crossarms shall be 2.4 m (8 feet) in length, except that 3.1 m (10 foot) crossarms shall be used for crossarm-mounted banked single-phase transformers or elsewhere as indicated. Crossarms shall be machined, chamfered, trimmed, and bored for

stud and bolt holes before pressure treatment. Factory drilling shall be provided for pole and brace mounting, for four pin or four vertical line-post insulators, and for four suspension insulators, except where otherwise indicated or required. Drilling shall provide required climbing space and wire clearances. Crossarms shall be straight and free of twists to within 2.5 mm per 304.8 mm (1/10 inch per foot) of length. Bend or twist shall be in one direction only.

2.11 NOT USED

2.12 NOT USED

2.13 FUSES AND SWITCHES, MEDIUM-VOLTAGE

2.13.1 Fuse Cutouts

Medium-voltage fuses and cutouts shall comply with NEMA SG 2 and shall be of the loadbreak open type construction rated 15 kV and of the heavy. Open-link cut-outs are not acceptable. Fuses shall be either indicating or dropout type. Fuse ratings shall be as indicated. Fuse cutouts shall be equipped with mounting brackets suitable for the indicated installations.

2.14 NOT USED

2.15 NOT USED

2.16 SURGE ARRESTERS

Surge arresters shall comply with NEMA LA 1 and IEEE C62.1, IEEE C62.2, and IEEE C62.11, and shall be provided for protection of aerial-to-underground transitions, automatic circuit reclosers, capacitor equipment, group-operated load-interrupter switches, transformers and other indicated equipment. Arresters shall be distribution class, rated as shown. Arresters shall be equipped with mounting brackets suitable for the indicated installations. Arresters shall be of the metal-oxide varistor type suitable for outdoor installations.

2.17 NOT USED

2.18 GROUNDING AND BONDING

2.18.1 Driven Ground Rods

Ground rods shall be of copper-clad steel conforming to UL 467 not less than 19 mm (3/4 inch) in diameter by 3 meter (10 feet) in length of the sectional type driven full length into the earth.

2.18.2 Grounding Conductors

Grounding conductors shall be bare, except where installed in conduit with associated phase conductors. Insulated conductors shall be of the same material as the phase conductors and green color-coded, except that conductors shall be rated no more than 600 volts. Bare conductors shall be ASTM B 8 soft-drawn unless otherwise indicated. Aluminum is not acceptable.

PART 3 EXECUTION

3.1 GENERAL INSTALLATION REQUIREMENTS

Equipment and devices shall be installed and energized in accordance with the manufacturer's published instructions. Circuits installed in conduits or underground and splices and terminations for medium-voltage cable shall conform to the requirements of Section 16375 ELECTRICAL DISTRIBUTION SYSTEM, UNDERGROUND. Secondary circuits installed in conduit on poles shall conform to the requirements of Section 16415 ELECTRICAL WORK, INTERIOR.

3.1.1 Conformance to Codes

The installation shall comply with the requirements and recommendations of IEEE C2 for heavy loading districts, Grade B construction. No reduction in clearance shall be made. The installation shall also comply with the applicable parts of NFPA 70.

3.1.2 Verification of Dimensions

The Contractor shall become familiar with details of the work, shall verify dimensions in the field, and shall notify the Contracting Officer of any discrepancy before performing any work.

3.2 POLE INSTALLATION

Joint-use electric/roadway-lighting poles for overhead electric and communication lines shall be wood. Provision for communication services is required on pole-line construction, except where specifically noted otherwise. A vertical pole space of not less than 600 mm (2 feet) shall be reserved at all locations.

3.2.1 Wood Pole Setting

Wood Pole Setting: Wood poles shall be set straight and firm. In normal firm ground, minimum pole-setting depths shall be as listed in Table II. In rocky or swampy ground, pole-setting depths shall be decreased or increased respectively in accordance with the local utility's published standards and as approved. In swampy or soft ground, a bog shoe shall be used where support for a pole is required. Poles in straight runs shall be in a straight line. Curved poles shall be placed with curvatures in the direction of the pole line. Poles shall be set to maintain as even a grade as practicable. When the average ground run is level, consecutive poles shall not vary more than 1.5 m in height. When the ground is uneven, poles differing in length shall be kept to a minimum by locating poles to avoid the highest and lowest ground points. If it becomes necessary to shorten a pole, a piece shall be sawed off the top end and roofed. If any pole is shortened after treatment, the shortened end of the pole shall be given an application of hot preservative. Where poles are set on hilly terrain, along edges of cuts or embankments, or where soil may be washed out, special precautions shall be taken to ensure durable pole foundations, and the setting depth shall be measured from the lower side of the pole. Holes shall be dug large enough to permit proper use of tampers to the full depth of a hole. Earth shall be placed into the hole in 300 mm maximum layers, then thoroughly tamped before the next layer is placed. Surplus earth shall be placed around each pole in a conical shape and packed tightly to drain water away from poles.

TABLE II

MINIMUM POLE-SETTING DEPTH (METERS)

Length Overall Meters	Straight Lines	Curves, Corners, and Points of Extra Strain
6.1	1.5	1.5
7.6	1.7	1.7
9.2	1.7	1.7
10.7	1.8	1.8
12.2	1.8	1.8
13.7	2.0	2.1
15.2	2.1	2.3
16.7	2.3	2.5
18.3	2.5	2.6
19.8	2.6	2.6
21.3	2.8	2.9
22.9	2.9	3.0
24.4	3.0	3.2
25.9	3.2	3.3
27.4	3.3	3.5
28.9	3.5	3.7
30.5	3.7	3.8

3.3 CROSSARM MOUNTING

Crossarms shall be bolted to poles with 15.9 mm (5/8 inch) through-bolts with square washers at each end. Bolts shall extend not less than 3 mm nor more than 50 mm beyond nuts. On single crossarm construction, the bolt head shall be installed on the crossarm side of the pole. Metal crossarm braces shall be provided on crossarms. Flat braces may be provided for 2.4 m (8 foot) crossarms and shall be 6.4 by 31.8 mm (1/4 by 1-1/4 inches), not less than 700 mm (28 inches) in length. Flat braces shall be bolted to arms with 9.5 mm (3/8 inch) carriage bolts with round or square washers between boltheads and crossarms, and secured to poles with 50.8 by 101.6 mm (1/2 by 4 inch) lag screws after crossarms are leveled and aligned. Angle braces are required for 3.1 m (10 foot) crossarms and shall be 1.5 m (60 inch) span by 457.2 mm (18 inch) drop formed in one piece from 38.1 by 38.1 by 4.8 mm (1-1/2 by 1-1/2 by 3/16 inch) angle. Angle braces shall be bolted to crossarms with 50.8 mm (1/2 inch) bolts with round or square washers between boltheads and crossarms, and secured to poles with 15.9 mm (5/8 inch) through-bolts. Double crossarms shall be securely held in position by means of 15.9 mm (5/8 inch) double-arming bolts. Each double-arming bolt shall be equipped with four nuts and four square washers.

3.4 GUY INSTALLATION

Guys shall be provided where shown, with loads and strengths as indicated, and wherever conductor tensions are not balanced, such as at angles, corners, and dead-ends. Where a single guy will not provide the required strength, two or more guys shall be provided. Where guys are wrapped around poles, at least two guy hooks shall be provided and pole shims shall be provided where guy tension exceeds 27 kN (6000 pounds). Guy clamps 152.4 mm (6 inches) in length with three 15.9 mm (5/8 inch) bolts, or offset-type guy clamps, or approved guy grips shall be provided at each guy terminal. Guy-strain insulators shall be provided in each guy for wood poles. Multiple-helix screw anchors shall be provided in marshy ground; rock anchors shall be installed in rock at right angles to guys, elsewhere anchors shall be of an expanding type, except that power installed screw

anchors of equivalent holding power are acceptable. A half-round yellow polyvinyl, fiberglass, or other suitable plastic guy marker, not less than 2.4 m (8 feet) in length, shall be provided at the anchor end of each guy shown, securely clamped to the guy or anchor at the bottom and top of the marker. Holding capacities for down guys shall be based on a lead angle of 45 degrees.

3.5 CONDUCTOR INSTALLATION

3.5.1 Line Conductors

Unless otherwise indicated, conductors shall be installed in accordance with manufacturer's approved tables of sags and tensions. Proper care shall be taken in handling and stringing conductors to avoid abrasions, sharp bends, cuts, kinks, or any possibility of damage to insulation or conductors. Conductors shall be paid out with the free end of conductors fixed and cable reels portable, except where terrain or obstructions make this method unfeasible. Bend radius for any insulated conductor shall not be less than the applicable NEMA specification recommendation. Conductors shall not be drawn over rough or rocky ground, nor around sharp bends. When installed by machine power, conductors shall be drawn from a mounted reel through stringing sheaves in straight lines clear of obstructions. Initial sag and tension shall be checked by the Contractor, in accordance with the manufacturer's approved sag and tension charts, within an elapsed time after installation as recommended by the manufacturer.

3.5.2 Connectors and Splices

Connectors and splices shall be mechanically and electrically secure under tension and shall be of the nonbolted compression type. The tensile strength of any splice shall be not less than the rated breaking strength of the conductor. Splice materials, sleeves, fittings, and connectors shall be noncorrosive and shall not adversely affect conductors. Aluminum-composition conductors shall be wire brushed and an oxide inhibitor applied before making a compression connection. Connectors which are factory-filled with an inhibitor are acceptable. Inhibitors and compression tools shall be of types recommended by the connector manufacturer. Primary line apparatus taps shall be by means of hot line clamps attached to compression type bail clamps (stirrups). Low-voltage connectors for copper conductors shall be of the solderless pressure type. Noninsulated connectors shall be smoothly taped to provide a waterproof insulation equivalent to the original insulation, when installed on insulated conductors. On overhead connections of aluminum and copper, the aluminum shall be installed above the copper.

3.5.3 Conductor-To-Insulator Attachments

Conductors shall be attached to insulators by means of clamps, shoes or tie wires, in accordance with the type of insulator. For insulators requiring conductor tie-wire attachments, tie-wire sizes shall be as indicated in TABLE II.

TABLE II

TIE-WIRE REQUIREMENTS

CONDUCTOR Copper (AWG)	TIE WIRE Soft-Drawn Copper (AWG)

TABLE II

TIE-WIRE REQUIREMENTS

CONDUCTOR	TIE WIRE
Copper (AWG)	Soft-Drawn Copper (AWG)
6	8
4 and 2	6
1 through 3/0	4
4/0 and larger	2
AAC, AAAC, or ACSR (AWG)	AAAC OR AAC (AWG)
Any size	6 or 4

3.5.4 Armor Rods

Armor rods shall be provided for AAC, AAAC, and ACSR conductors. Armor rods shall be installed at supports, except armor rods will not be required at primary dead-end assemblies if aluminum or aluminum-lined zinc-coated steel clamps are used. Lengths and methods of fastening armor rods shall be in accordance with the manufacturer's recommendations. For span lengths of less than 61 m, flat aluminum armor rods may be used. Flat armor rods, not less than 762.0 micrometers by 6.4 mm (0.03 by 0.25 inch) shall be used on No. 1 AWG AAC and AAAC and smaller conductors and on No. 5 AWG ACSR and smaller conductors. On larger sizes, flat armor rods shall be not less than 1.3 by 7.6 mm (0.05 by 0.30 inches). For span lengths of 61 m or more, preformed round armor rods shall be used.

3.6 NOT USED

3.7 CONNECTIONS TO UTILITY LINES

The Contractor shall coordinate the work with the Contracting Officer and shall provide for final connections to the installation electric lines.

3.8 CONNECTIONS BETWEEN AERIAL AND UNDERGROUND SYSTEMS

Connections between aerial and underground systems shall be made as shown. Underground cables shall be extended up poles in conduit to cable terminations. Conduits shall be secured to poles by two-hole galvanized steel pipe straps spaced not more than 3 m apart and with one support not more than 300 mm from any bend or termination. Cables shall be supported by devices separate from the conduit or guard, near their point of exit from the riser conduit or guard. Cables guards shall be secured in accordance with the manufacturers published procedure. Risers shall be equipped with bushings to protect cables. Capnut potheads shall be used to terminate medium-voltage multiple-conductor cable.

3.9 NOT USED

3.10 GROUNDING

Noncurrent-carrying metal parts of equipment and conductor assemblies, such as luminaires, medium-voltage cable terminations and messengers, metal poles, operating mechanisms of pole top switches, panel enclosures, transformers, capacitors, recloser frames (cases) and other

noncurrent-carrying metal items shall be grounded. Additional grounding of equipment, neutral, and surge arrester grounding systems shall be installed at poles where indicated.

3.10.1 Grounding Electrodes

Grounding electrodes shall be installed as follows:

a. Driven rod electrodes - Unless otherwise indicated, ground rods shall be located approximately 900 mm out from base of the pole and shall be driven into the earth until the tops of the rods are approximately 300 mm below finished grade. Multiple rods shall be evenly spaced at least 3 m apart and connected together 600 mm below grade with a minimum No. 6 bare copper conductor.

b. Ground Resistance - The maximum resistance of a driven ground rod shall not exceed 25 ohms under normally dry conditions. Whenever the required ground resistance is not met, provide additional electrodes interconnected with grounding conductors, to achieve the specified ground resistance. The additional electrodes will be up to three, 3 m (10 feet) rods spaced a minimum of 3 m (10 feet) apart. If the resultant resistance exceeds 25 ohms measured not less than 48 hours after rainfall, the Contracting Officer shall be notifies immediately. Connections below grade shall be fusion welded. Connections above grade shall be fusion welded or shall use UL 467 approved connectors.

3.10.2 Grounding and Bonding Connections

Connections above grade shall be made by the fusion-welding process or with bolted solderless connectors in compliance with UL 467, and those below grade shall be made by a fusion-welding process. Where grounding conductors are connected to aluminum-composition conductors, specially treated or lined copper-to-aluminum connectors suitable for this purpose shall be used.

3.11 FIELD TESTING

3.11.1 General

Field testing shall be performed in the presence of the Contracting Officer. The Contractor shall notify the Contracting Officer 10 days prior to conducting tests. The Contractor shall furnish materials, labor, and equipment necessary to conduct field tests. The Contractor shall perform tests and inspections recommended by the manufacturer unless specifically waived by the Contracting Officer. The Contractor shall maintain a written record of tests which includes date, test performed, personnel involved, devices tested, serial number and name of test equipment, and test results. Field reports will be signed and dated by the Contractor.

3.11.2 Safety

The Contractor shall provide and use safety devices such as rubber gloves, protective barriers, and danger signs to protect and warn personnel in the test vicinity. The Contractor shall replace any devices or equipment which are damaged due to improper test procedures or handling.

3.11.3 Ground-Resistance Tests

The resistance of each pole ground shall be measured using the fall-of-potential method defined in IEEE Std 81. Ground resistance measurements shall be made before the electrical distribution system is energized and shall be made in normally dry conditions not less than 48 hours after the last rainfall. Resistance measurements of separate grounding electrode systems shall be made before the systems are bonded together below grade. The combined resistance of separate systems may be used to meet the required resistance, but the specified number of electrodes shall be provided.

3.11.4 NOT USED

3.11.5 Sag and Tension Test

The Contracting Officer shall be given prior notice of the time schedule for stringing conductors or cables serving overhead medium-voltage circuits and reserves the right to witness the procedures used for ascertaining that initial stringing sags and tensions are in compliance with requirements for the applicable loading district and cable weight.

3.11.6 NOT USED

3.11.7 NOT USED

3.11.8 NOT USED

3.11.9 Operating Tests

After the installation is completed, and at such time as the Contracting Officer may direct, the Contractor shall conduct operating tests for approval. The equipment shall be demonstrated to operate in accordance with the specified requirements. An operating test report shall be submitted in accordance with paragraph SUBMITTALS.

3.12 NOT USED

3.13 ACCEPTANCE

Final acceptance of the facility will not be given until the Contractor has successfully completed all tests and after all defects in installation, material or operation have been corrected.

-- End of Section --

SECTION 16375

ELECTRICAL DISTRIBUTION SYSTEM, UNDERGROUND

PART 1 GENERAL

1.1 REFERENCES

The publications listed below form a part of this specification to the extent referenced. The publications are referred to in the text by basic designation only.

AMERICAN NATIONAL STANDARDS INSTITUTE (ANSI)

ANSI C12.1	(1995) Code for Electricity Metering
ANSI C12.4	(1984; R 1990) Mechanical Demand Registers
ANSI C12.10	(1987) Electromechanical Watthour Meters
ANSI C12.11	(1987; R 1993) Instrument Transformers for Revenue Metering, 10 kV BIL through 350 kV BIL (0.6 kV NSV through 69 kV NSV)
ANSI C37.46	(1981; R 1992) Power Fuses and Fuse Disconnecting Switches
ANSI C57.12.21	(1980) Requirements for Pad-Mounted, Compartmental-Type, Self-Cooled, Single-Phase Distribution Transformers with High-Voltage Bushings; (High-Voltage, 34 500 Grd Y/19 920 Volts and Below; Low-Voltage, 240/120; 167 kVA and Smaller)
ANSI C57.12.26	(1993) Pad-Mounted Compartmental-Type, Self-Cooled, Three-Phase Distribution Transformers for Use with Separable Insulated High-Voltage Connectors, High-Voltage, 34 500 Grd Y/19 920 Volts and Below; 2500 kVa and Smaller
ANSI C80.1	(1990) Rigid Steel Conduit - Zinc Coated
ANSI C119.1	(1986) Sealed Insulated Underground Connector Systems Rated 600 Volts

AMERICAN SOCIETY FOR TESTING AND MATERIALS (ASTM)

ASTM A 48	(1994a) Gray Iron Castings
ASTM A 123	(1989a) Zinc (Hot-Dip Galvanized) Coatings on Iron and Steel Products
ASTM A 153	(1996) Zinc Coating (Hot-Dip) on Iron and Steel Hardware

ASTM B 8	(1993) Concentric-Lay-Stranded Copper Conductors, Hard, Medium-Hard, or Soft
ASTM B 117	(1994) Operating Salt Spray (Fog) Testing Apparatus
ASTM C 478	(1994) Precast Reinforced Concrete Manhole Sections
ASTM D 923	(1991) Sampling Electrical Insulating Liquids
ASTM D 1654	(1992) Evaluation of Painted or Coated Specimens Subjected to Corrosive Environments
ASTM D 4059	(1991) Analysis of Polychlorinated Biphenyls in Insulating Liquids by Gas Chromatography
ASTM F 883	(1990) Padlocks

ASSOCIATION OF EDISON ILLUMINATING COMPANIES (AEIC)

AEIC CS6	(1987; Rev Mar 1989) Ethylene Propylene Rubber Insulated Shielded Power Cables Rated 5 Through 69 kV

INSTITUTE OF ELECTRICAL AND ELECTRONICS ENGINEERS (IEEE)

IEEE C2	(1997) National Electrical Safety Code
IEEE C57.12.00	(1993) IEEE Standard General Requirements for Liquid-Immersed Distribution, Power, and Regulating Transformers
IEEE C57.13	(1993) Instrument Transformers
IEEE C57.98	(1993) Guide for Transformer Impulse Tests
IEEE C62.1	(1989; R 1994) Surge Arresters for ac Power Circuits
IEEE C62.2	(1987; R 1994) Guide for the Application of Gapped Silicon-Carbide Surge Arresters for Alternating Current Systems
IEEE C62.11	(1993) IEEE Standard Metal-Oxide Surge Arresters for AC Power Circuits
IEEE Std 48	(1996) Standard Test Procedures and Requirements for Alternating-Current Cable Terminations 2.5 kV through 765 kV
IEEE Std 81	(1983) Guide for Measuring Earth Resistivity, Ground Impedance, and Earth Surface Potentials of a Ground System (Part 1)

IEEE Std 100	(1992) IEEE Standard Dictionary of Electrical and Electronics Terms
IEEE Std 242	(1986; R 1991) Recommended Practice for Protection and Coordination of Industrial and Commercial Power Systems
IEEE Std 386	(1995) Separable Insulated Connector Systems for Power Distribution Systems Above 600V
IEEE Std 399	(1990) Recommended Practice for Industrial and Commercial Power System Analysis
IEEE Std 404	(1993) Cable Joints for Use with Extruded Dielectric Cable Rated 5000 V through 46 000 V and Cable Joints for Use with Laminated Dielectric Cable Rated 2500 V Through 500 000 V
IEEE Std 592	(1990) Exposed Semiconducting Shields on Premolded High Voltage Cable Joints and Separable Insulated Connectors

NATIONAL ELECTRICAL MANUFACTURERS ASSOCIATION (NEMA)

NEMA FB 1	(1993) Fittings, Cast Metal Boxes and Conduit Bodies for Conduit and Cable Assemblies
NEMA FU 1	(1986) Low Voltage Cartridge Fuses
NEMA LA 1	(1992) Surge Arresters
NEMA TC 6	(1990) PVC and ABS Plastic Utilities Duct for Underground Installation
NEMA WC 8	(1993) Ethylene-Propylene-Rubber-Insulated Wire and Cable for the Transmission and Distribution of Electrical Energy

NATIONAL FIRE PROTECTION ASSOCIATION (NFPA)

NFPA 70	(1999) National Electrical Code

UNDERWRITERS LABORATORIES (UL)

UL 6	(1993; Rev March 96) Rigid Metal Conduit
UL 198E	(1988; Rev Jul 1988) Class R Fuses
UL 467	(1993; Rev thru Aug 1996) Grounding and Bonding Equipment
UL 486A	(1991; Rev Oct 1991) Wire Connectors and Soldering Lugs for Use with Copper Conductors
UL 510	(1994) Insulating Tape

UL 514A	(1996) Metallic Outlet Boxes
UL 651	(1995) Schedule 40 and 80 Rigid PVC Conduit
UL 1242	(1996) Intermediate Metal Conduit

1.2 GENERAL REQUIREMENTS

1.2.1 Terminology

Terminology used in this specification is as defined in IEEE Std 100.

1.3 SUBMITTALS

Governmental approval is required for submittals with a "GA" designation; submittals having an "FIO" designation are for information only. The following shall be submitted in accordance with Section 01330 SUBMITTAL PROCEDURES:

SD-01 Data

Fault Current and Protective Devices Coordination Studies; GA.

The study shall be submitted with protective device equipment submittals. No time extension or similar contract modifications will be granted for work arising out of the requirements for this study. Approval of protective devices proposed shall be based on recommendations of this study. The Government shall not be held responsible for any changes to equipment, device ratings, settings, or additional labor for installation of equipment or devices ordered and/or procured prior to approval of the study.

Manufacturer's Catalog Data; GA.

Catalog cuts, brochures, circulars, specifications, product data, and printed information in sufficient detail and scope to verify compliance with the requirements of the contract documents.

Material, Equipment, and Fixture Lists; FIO.

A complete itemized listing of equipment and materials proposed for incorporation into the work. Each entry shall include an item number, the quantity of items proposed, and the name of the manufacturer of each such item.

Installation Procedures; GA.

As a minimum, installation procedures for transformers, substations, switchgear, and medium-voltage cable terminations and splices.

Procedures shall include cable pulling plans, diagrams, instructions, and precautions required to install, adjust, calibrate, and test the devices and equipment.

SD-04 Drawings

Electrical Distribution System; GA.

Detail drawings consisting of equipment drawings, illustrations, schedules, instructions, diagrams manufacturers standard installation drawings and other information necessary to define the installation and enable the Government to check conformity with the requirements of the contract drawings.

If departures from the contract drawings are deemed necessary by the Contractor, complete details of such departures shall be included with the detail drawings. Approved departures shall be made at no additional cost to the Government.

Detail drawings shall show how components are assembled, function together and how they will be installed on the project. Data and drawings for component parts of an item or system shall be coordinated and submitted as a unit. Data and drawings shall be coordinated and included in a single submission. Multiple submissions for the same equipment or system are not acceptable except where prior approval has been obtained from the Contracting Officer. In such cases, a list of data to be submitted later shall be included with the first submission. Detail drawings shall consist of the following:

a. Detail drawings showing physical arrangement, construction details, connections, finishes, materials used in fabrication, provisions for conduit or busway entrance, access requirements for installation and maintenance, physical size, electrical characteristics, foundation and support details, and equipment weight. Drawings shall be drawn to scale and/or dimensioned. All optional items shall be clearly identified as included or excluded.

b. Internal wiring diagrams of equipment showing wiring as actually provided for this project. External wiring connections shall be clearly identified.

Detail drawings shall as a minimum depict the installation of the following items:

a. Medium-voltage cables and accessories including cable installation plan.

b. Transformers.

c. Surge arresters.

d. Cutouts

e. Insulators

As-Built Drawings; GA.

The as-built drawings shall be a record of the construction as installed. The drawings shall include the information shown on the contract drawings as well as deviations, modifications, and changes from the contract drawings, however minor. The as-built drawings shall be a full sized set of prints marked to reflect deviations, modifications, and changes. The as-built drawings shall be complete and show the location, size, dimensions, part identification, and other information. Additional sheets may be added. The as-built drawings shall be jointly inspected for accuracy and completeness by the Contractor's quality control representative and by the Contracting Officer prior to the submission of

each monthly pay estimate. Upon completion of the work, the Contractor shall provide three full sized sets of the marked prints to the Contracting Officer for approval. If upon review, the as-built drawings are found to contain errors and/or omissions, they will be returned to the Contractor for correction. The Contractor shall correct and return the as-built drawings to the Contracting Officer for approval within 10 calendar days from the time the drawings are returned to the Contractor.

SD-09 Reports

Factory Test; GA.

Certified factory test reports shall be submitted when the manufacturer performs routine factory tests, including tests required by standards listed in paragraph REFERENCES. Results of factory tests performed shall be certified by the manufacturer, or an approved testing laboratory, and submitted within 7 days following successful completion of the tests. The manufacturer's pass-fail criteria for tests specified in paragraph FIELD TESTING shall be included.

Field Testing; GA.

A proposed field test plan, 20 days prior to testing the installed system. No field test shall be performed until the test plan is approved. The test plan shall consist of complete field test procedures including tests to be performed, test equipment required, and tolerance limits.

Test Reports; GA.

Six copies of the information described below in 215.9 by 279.4 mm (8-1/2 by 11 inch) binders having a minimum of three rings, including a separate section for each test. Sections shall be separated by heavy plastic dividers with tabs.

a. A list of equipment used, with calibration certifications.

b. A copy of measurements taken.

c. The dates of testing.

d. The equipment and values to be verified.

e. The condition specified for the test.

f. The test results, signed and dated.

g. A description of adjustments made.

Cable Installation Reports; GA.

Six copies of the information described below in 215.9 by 279.4 mm (8-1/2 by 11 inch) binders having a minimum of three rings from which material may readily be removed and replaced, including a separate section for each cable pull. Sections shall be separated by heavy plastic dividers with tabs, with all data sheets signed and dated by the person supervising the pull.

a. Site layout drawing with cable pulls numerically identified.

b. A list of equipment used, with calibration certifications. The manufacturer and quantity of lubricant used on pull.

c. The cable manufacturer and type of cable.

d. The dates of cable pulls, time of day, and ambient temperature.

e. The length of cable pull and calculated cable pulling tensions.

f. The actual cable pulling tensions encountered during pull.

SD-13 Certificates

Materials and Equipment; GA.

Where materials or equipment are specified to conform to the standards of the Underwriters Laboratories (UL) or to be constructed or tested, or both, in accordance with the standards of the American National Standards Institute (ANSI), the Institute of Electrical and Electronics Engineers (IEEE), or the National Electrical Manufacturers Association (NEMA), the Contractor shall submit proof that the items provided conform to such requirements. The label of, or listing by, UL will be acceptable as evidence that the items conform. Either a certification or a published catalog specification data statement, to the effect that the item is in accordance with the referenced ANSI or IEEE standard, will be acceptable as evidence that the item conforms. A similar certification or published catalog specification data statement to the effect that the item is in accordance with the referenced NEMA standard, by a company listed as a member company of NEMA, will be acceptable as evidence that the item conforms. In lieu of such certification or published data, the Contractor may submit a certificate from a recognized testing agency equipped and competent to perform such services, stating that the items have been tested and that they conform to the requirements listed, including methods of testing of the specified agencies. Compliance with above-named requirements does not relieve the Contractor from compliance with any other requirements of the specifications.

Cable Splicer Qualification; GA.

A certification that contains the names and the qualifications of people recommended to perform the splicing and termination of medium-voltage cables approved for installation under this contract. The certification shall indicate that any person recommended to perform actual splicing and terminations has been adequately trained in the proper techniques and have had at least three recent years of experience in splicing and terminating the same or similar types of cables approved for installation. In addition, any person recommended by the Contractor may be required to perform a practice splice and termination, in the presence of the Contracting Officer, before being approved as a qualified installer of medium-voltage cables. If that additional requirement is imposed, the Contractor shall provide short sections of the approved types of cables along with the approved type of splice and termination kits, and detailed manufacturer's instruction for the proper splicing and termination of the approved cable types.

Cable Installer Qualifications; GA.

The Contractor shall provide at least one onsite person in a supervisory position with a documentable level of competency and experience to

supervise all cable pulling operations. A resume shall be provided showing the cable installers' experience in the last three years, including a list of references complete with points of contact, addresses and telephone numbers.

SD-19 OPERATION AND MAINTENANCE MANUALS

Electrical Distribution System; GA.

Six copies of operation and maintenance manuals, within 7 calendar days following the completion of tests and including assembly, installation, operation and maintenance instructions, spare parts data which provides supplier name, current cost, catalog order number, and a recommended list of spare parts to be stocked. Manuals shall also include data outlining detailed procedures for system startup and operation, and a troubleshooting guide which lists possible operational problems and corrective action to be taken. A brief description of all equipment, basic operating features, and routine maintenance requirements shall also be included. Documents shall be bound in a binder marked or identified on the spine and front cover. A table of contents page shall be included and marked with pertinent contract information and contents of the manual. Tabs shall be provided to separate different types of documents, such as catalog ordering information, drawings, instructions, and spare parts data. Index sheets shall be provided for each section of the manual when warranted by the quantity of documents included under separate tabs or dividers.

Three additional copies of the instructions manual shall be provided within 30 calendar days following the manuals.

1.4 DELIVERY, STORAGE, AND HANDLING

Devices and equipment shall be visually inspected by the Contractor when received and prior to acceptance from conveyance. Stored items shall be protected from the environment in accordance with the manufacturer's published instructions. Damaged items shall be replaced. Oil filled transformers shall be stored in accordance with the manufacturer's requirements. Metal poles shall be handled and stored in accordance with the manufacturer's instructions.

1.5 EXTRA MATERIALS

One additional spare fuse or fuse element for each furnished fuse or fuse element shall be delivered to the contracting officer when the electrical system is accepted. Two complete sets of all special tools required for maintenance shall be provided, complete with a suitable tool box. Special tools are those that only the manufacturer provides, for special purposes (to access compartments, or operate, adjust, or maintain special parts).

PART 2 PRODUCTS

2.1 STANDARD PRODUCT

Material and equipment shall be the standard product of a manufacturer regularly engaged in the manufacture of the product and shall essentially duplicate items that have been in satisfactory use for at least 2 years prior to bid opening. Items of the same classification shall be identical including equipment, assemblies, parts, and components.

2.2 NAMEPLATES

2.2.1 General

Each major component of this specification shall have the manufacturer's name, address, type or style, model or serial number, and catalog number on a nameplate securely attached to the equipment. Nameplates shall be made of noncorrosive metal. Equipment containing liquid dielectrics shall have the type of dielectric on the nameplate. As a minimum, nameplates shall be provided for transformers, circuit breakers, meters, switches, and switchgear.

2.2.2 Liquid-Filled Transformer Nameplates

Power transformers shall be provided with nameplate information in accordance with IEEE C57.12.00. Nameplates shall indicate the number of liters and composition of liquid-dielectric, and shall be permanently marked with a statement that the transformer dielectric to be supplied is non-polychlorinated biphenyl. If transformer nameplate is not so marked, the Contractor shall furnish manufacturer's certification for each transformer that the dielectric is non-PCB classified, with less than 2 ppm PCB content in accordance with paragraph LIQUID DIELECTRICS. Certifications shall be related to serial numbers on transformer nameplates. Transformer dielectric exceeding the 2 ppm PCB content or transformers without certification will be considered as PCB insulated and will not be accepted.

2.3 CORROSION PROTECTION

2.3.1 Aluminum Materials

Aluminum shall not be used.

2.3.2 Ferrous Metal Materials

2.3.2.1 Hardware

Ferrous metal hardware shall be hot-dip galvanized in accordance with ASTM A 153 and ASTM A 123.

2.3.2.2 Equipment

Equipment and component items, including but not limited to transformer stations and ferrous metal luminaries not hot-dip galvanized or porcelain enamel finished, shall be provided with corrosion-resistant finishes which shall withstand 480 hours of exposure to the salt spray test specified in ASTM B 117 without loss of paint or release of adhesion of the paint primer coat to the metal surface in excess of 1.6 mm (1/16 inch) from the test mark. The scribed test mark and test evaluation shall be in accordance with ASTM D 1654 with a rating of not less than 7 in accordance with TABLE 1, (procedure A). Cut edges or otherwise damaged surfaces of hot-dip galvanized sheet steel or mill galvanized sheet steel shall be coated with a zinc rich paint conforming to the manufacturer's standard.

2.3.3 Finishing

Painting required for surfaces not otherwise specified and finish painting of items only primed at the factory shall be as specified in Section 09900 PAINTING, GENERAL.

2.4 CABLES

Cables shall be single conductor type unless otherwise indicated.

2.4.1 Conductor Material

Underground cables shall be of soft drawn copper conductor material.

2.4.2 Medium-Voltage Cables

2.4.2.1 General

Medium voltage cables shall conform to the requirements of NEMA WC 8 for cables utilizing ethylene-propylene-rubber (EPR) insulation. Cables shall be in accordance with the requirements of NFPA 70.

2.4.2.2 Insulation

Cables shall utilize ethylene-propylene-rubber (EPR) insulation. Cables shall be provided with 133 percent insulation level.

2.4.2.3 Jackets

Cables shall be provided with a nonmetallic jacket.

2.4.2.4 Neutrals

Neutral conductors of grounded neutral systems except for concentric neutral cables shall be of the same insulation material as phase conductors, except that a 600-volt insulation rating is acceptable.

2.4.2.5 Shielding

Cables rated for above 2 kV shall have both conductor and insulation shielding for each phase, except insulation shielding is not required for 5 kV armored or metallic-sheathed cable.

2.4.2.6 Ratings

Medium-voltage cables shall be rated for a circuit voltage of 15 kV.

2.4.3 Low-Voltage Cables

Cables shall be rated 600 volts and shall conform to the requirements of NFPA 70. Cables shall utilize ethylene-propylene-rubber (EPR) insulation and shall conform to the requirements of NEMA WC 8.

2.4.3.1 NOT USED

2.4.3.2 In Duct

Cables shall be single-conductor cable, Type RHW, THW, THWN, TW, USE, or XHHW in accordance with NFPA 70.

2.5 CABLE JOINTS, TERMINATIONS, AND CONNECTORS

2.5.1 Medium-Voltage Cable Joints

Medium-voltage cable joints shall comply with IEEE Std 404 and IEEE Std 592.

Medium-voltage cable terminations shall comply with IEEE Std 48. Joints shall be the standard products of a manufacturer and shall be either of the factory preformed type or of the kit type containing tapes and other required parts. Joints shall have ratings not less than the ratings of the cables on which they are installed. Splice kits may be of the heat-shrinkable type for voltages up to 15 kV, of the premolded splice and connector type, the conventional taped type, or the resin pressure-filled overcast taped type for voltages up to 35 kV; except that for voltages of 7.5 kV or less a resin pressure-filled type utilizing a plastic-tape mold is acceptable. Joints used in manholes, handholes, vaults and pull boxes shall be certified by the manufacturer for waterproof, submersible applications.

2.5.2 Medium-Voltage Separable Insulated Connectors

Separable insulated connectors shall comply with IEEE Std 386 and IEEE Std 592 and shall be of suitable construction or standard splice kits shall be used. Separable insulated connectors are acceptable for voltages up to 35 kV. Connectors shall be of the loadbreak type as indicated, of suitable construction for the application and the type of cable connected, and shall include cable shield adaptors. Separable insulated connectors shall not be used as substitutes for conventional permanent splices. External clamping points and test points shall be provided.

2.5.3 Low-Voltage Cable Splices

Low-voltage cable splices and terminations shall be rated at not less than 600 Volts. Splices in conductors No. 10 AWG and smaller shall be made with an insulated, solderless, pressure type connector, conforming to the applicable requirements of UL 486A. Splices in conductors No. 8 AWG and larger shall be made with noninsulated, solderless, pressure type connector, conforming to the applicable requirements of UL 486A. Splices shall then be covered with an insulation and jacket material equivalent to the conductor insulation and jacket. Splices below grade or in wet locations shall be sealed type conforming to ANSI C119.1 or shall be waterproofed by a sealant-filled, thick wall, heat shrinkable, thermosetting tubing or by pouring a thermosetting resin into a mold that surrounds the joined conductors.

2.5.4 Terminations

Terminations shall be in accordance with IEEE Std 48, Class 1 or Class 2; of the molded elastomer, wet-process porcelain, prestretched elastomer, heat-shrinkable elastomer, or taped type. Acceptable elastomers are track-resistant silicone rubber or track-resistant ethylene propylene compounds, such as ethylene propylene rubber or ethylene propylene diene monomer. Separable insulated connectors may be used for apparatus terminations, when such apparatus is provided with suitable bushings. Terminations shall be of the outdoor type, except that where installed inside outdoor equipment housings which are sealed against normal infiltration of moisture and outside air, indoor, Class 2 terminations are acceptable. Class 3 terminations are not acceptable. Terminations, where required, shall be provided with mounting brackets suitable for the intended installation and with grounding provisions for the cable shielding, metallic sheath, and armor.

2.5.4.1 Factory Preformed Type

Molded elastomer, wet-process porcelain, prestretched, and heat-shrinkable

terminations shall utilize factory preformed components to the maximum extent practicable rather than tape build-up. Terminations shall have basic impulse levels as required for the system voltage level. Leakage distances shall comply with wet withstand voltage test requirements of IEEE Std 48 for the next higher Basic Insulation Level (BIL) level.

2.5.4.2 Taped Terminations

Taped terminations shall use standard termination kits providing terminal connectors, field-fabricated stress cones, and rain hoods. Terminations shall be at least 1.2 m long from the end of the tapered cable jacket to the start of the terminal connector, or not less than the kit manufacturer's recommendations, whichever is greater.

2.6 CONDUIT AND DUCTS

Ducts shall be single, round-bore type, with wall thickness and fittings suitable for the application. Duct lines shall be concrete-encased, thin-wall type for duct lines between manholes and for other medium-voltage lines. Low-voltage lines run elsewhere may be direct-burial, thick-wall type.

2.6.1 Metallic Conduit

Intermediate metal conduit shall comply with UL 1242. Rigid galvanized steel conduit shall comply with UL 6 and ANSI C80.1. Metallic conduit fittings and outlets shall comply with UL 514A and NEMA FB 1.

2.6.2 Nonmetallic Ducts

2.6.2.1 NOT USED

2.6.2.2 Concrete Encased Ducts

UL 651 Schedule 40.

2.6.2.3 Direct Burial

UL 651 Schedule 40, or NEMA TC 6 Type DB.

2.6.3 Conduit Sealing Compound

Compounds for sealing ducts and conduit shall have a putty-like consistency workable with the hands at temperatures as low as 2 degrees C (35 degrees F), shall neither slump at a temperature of 150 degrees C (300 degrees F), nor harden materially when exposed to the air. Compounds shall adhere to clean surfaces of fiber or plastic ducts; metallic conduits or conduit coatings; concrete, masonry, or lead; any cable sheaths, jackets, covers, or insulation materials; and the common metals. Compounds shall form a seal without dissolving, noticeably changing characteristics, or removing any of the ingredients. Compounds shall have no injurious effect upon the hands of workmen or upon materials.

2.7 MANHOLES, HANDHOLES, AND PULLBOXES

Strength of manholes, handholes, and pullboxes and their frames and covers shall conform to the requirements of IEEE C2. Precast-concrete manholes shall have the required strength established by ASTM C 478. Frames and covers shall be made of gray cast iron and a machine-finished seat shall be

provided to ensure a matching joint between frame and cover. Cast iron shall comply with ASTM A 48, Class 30B, minimum. Handholes for low voltage cables installed in parking lots, sidewalks, and turfed areas shall be fabricated from an aggregate consisting of sand and with continuous woven glass strands having an overall compressive strength of at least 69 MPa (10,000 psi) and a flexural strength of at least 34.5 MPa (5000 psi). Pullbox and handhole covers in sidewalks, and turfed areas shall be of the same material as the box. Concrete pullboxes shall consist of precast reinforced concrete boxes, extensions, bases, and covers.

2.8 POLES AND HARDWARE

2.8.1 Fused Cutouts

Open type fused cutputs rated 100 amperes and 7100 amperes symmetrical interrupting current at 8.3/15 kV, conforming to ANSI C37.42. Type K fuses conforming to ANSI C37.42 with ampere ratings equal to 150 percent of the transformer full load rating. Open link type fuse cutouts are not acceptable.

2.8.2 Calking Compound

Compound for sealing of conduit risers shall be of a puttylike consistency workable with hands at temperatures as low as 35 deg. F, shall not slump at a temperature of 300 degrees F, and shall not harden materially when exposed to air. Compound shall readily calk or adhere to clean surfaces of the materials with which it is designed to be used. Compound shall have no injurious effects upon the workmen or upon the materials.

2.9 TRANSFORMERS, SUBSTATIONS, AND SWITCHGEAR

Transformers, substations, and switchgear shall be of the outdoor type having the ratings and arrangements indicated. Medium-voltage ratings of cable terminations shall be 15 kV between phases for 133 percent insulation level.

2.9.1 NOT USED

2.9.2 Pad-Mounted Transformers

Pad-mounted transformers shall comply with ANSI C57.12.26 and shall be of the loop feed type. Pad-mounted transformer stations shall be assembled and coordinated by one manufacturer and each transformer station shall be shipped as a complete unit so that field installation requirements are limited to mounting each unit on a concrete pad and connecting it to primary and secondary lines. Stainless steel pins and hinges shall be provided. Barriers shall be provided between high- and low-voltage compartments. High-voltage compartment doors shall be interlocked with low-voltage compartment doors to prevent access to any high-voltage section unless its associated low-voltage section door has first been opened. Compartments shall be sized to meet the specific dimensional requirements of ANSI C57.12.26. Pentahead locking bolts shall be provided with provisions for a padlock.

2.9.2.1 High-Voltage Compartments

The high-voltage compartment shall be dead-front construction. Primary switching and protective devices shall include loadbreak switching, oil-immersed, current-limiting, bayonet-type fuses, medium-voltage

separable loadbreak connectors, universal bushing wells and inserts or integral one piece bushings and surge arresters. Fuses shall comply with the requirements of paragraph METERING AND PROTECTIVE DEVICES. The switch shall be mounted inside transformer tank with switch operating handle located in high-voltage compartment and equipped with metal loop for hook stick operation. Fuses shall be interlocked with switches so that fuses can be removed only when the associated switch is in the "OPEN" position. Adjacent to medium-voltage cable connections, a nameplate or equivalent stencilled inscription shall be provided inscribed "DO NOT OPEN CABLE CONNECTORS UNLESS SWITCH IS OPEN." Surge arresters shall be fully insulated and configured to terminate on a second set of high voltage bushings.

2.9.2.2 Load-Break Switch

Radial-feed oil-immersed type rated at 15 kV, 95 kV BIL, with a continuous current rating and load-break rating of 200 ampere, and a make-and-latch rating of 10,000 rms amperes symmetrical. Locate the switch handle in the high-voltage compartment.

2.9.2.3 Transformer Tank Sections

Transformers shall comply with IEEE C57.12.00, ANSI C57.12.21, and ANSI C57.12.26 and shall be of the mineral oil-insulated type. Transformers shall be suitable for outdoor use and shall have 2 separate windings per phase. Standard NEMA primary taps shall be provided. Where primary taps are not specified, 4, 2-1/2 percent rated kVA high-voltage taps shall be provided 2 above and 2 below rated, primary voltage. Operating handles for primary tap changers for de-energized operation shall be located within high-voltage compartments, externally to transformer tanks. Adjacent to the tap changer operating handle, a nameplate or equivalent stenciled inscription shall be provided and inscribed "DO NOT OPERATE UNDER LOAD." Transformer ratings at 60 Hz shall be as follows:

Three-phase capacity .....As indicated.

Impedance .....As indicated.

Temperature Rise .....65 degrees C.

High-voltage winding .....13200 volts.

High-voltage winding connections .....Delta.

Low-voltage winding .....480Y/277 volts.

Low-voltage winding connections .....Wye.

2.9.2.4 Low-Voltage Cable Compartments

Neutrals shall be provided with fully-insulated bushings. Clamp type cable terminations, suitable for copper conductors entering from below, shall be provided as necessary.

2.9.2.5 Accessories

High-voltage warning signs shall be permanently attached to each side of transformer stations. Voltage warning signs shall comply with IEEE C2. Copper-faced steel or stainless steel ground connection pads shall be

provided in both the high- and low-voltage compartments. Dial-type thermometer, liquid-level gauge, and drain valve with built-in sampling device shall be provided for each transformer station. Insulated-bushing-type parking stands shall be provided adjacent to each separable load-break elbow to provide for cable isolation during sectionalizing operations.

2.10 METERING AND PROTECTIVE DEVICES

2.10.1 NOT USED

2.10.2 Fuses, Medium-Voltage, Including Current-Limiting

2.10.2.1 Construction

Units shall be suitable for outdoor use. Fuses shall have integral blown-fuse indicators. All ratings shall be clearly visible.

2.10.2.2 Ratings

Current-limiting power fuses shall have ratings in accordance with ANSI C37.46 and as follows:

Nominal voltage .....14.4 kV.

Rated maximum voltage .....15.5.kV.

Maximum symmetrical interrupting capacity .....40 KA.

Rated continuous current .....40 A.

BIL .....95 kV.

2.10.2.3 E-Rated, Current-Limiting Power Fuses

E-rated, current-limiting, power fuses shall conform to ANSI C37.46.

2.10.3 Fuses, Low-Voltage, Current-Limiting

2.10.3.1

Low-voltage fuses shall conform to NEMA FU 1. Time delay and nontime delay options shall be as specified. Equipment provided under this contract shall be provided with a complete set of properly rated fuses when the equipment manufacturer utilizes fuses in the manufacture of the equipment, or if current-limiting fuses are required to be installed to limit the ampere-interrupting capacity of circuit breakers or equipment to less than the maximum available fault current at the location of the equipment to be installed. Fuses shall have a voltage rating of not less than the phase-to-phase circuit voltage, and shall have the time-current characteristics required for effective power system coordination.

2.10.3.2 Cartridge Fuses

Cartridge fuses, current-limiting type, Class RK1 shall have tested interrupting capacity not less than 100,000 amperes. Fuse holders shall be the type that will reject Class H fuses.

a. Class R fuses shall conform to UL 198E.

2.10.4 Instrument Transformers

2.10.4.1 General

Instrument transformers shall comply with ANSI C12.11 and IEEE C57.13. Instrument transformers shall be configured for mounting in/on the device to which they are applied. Polarity marks on instrument transformers shall be visually evident and shown on drawings.

2.10.4.2 Current Transformers

Unless otherwise indicated, bar, wound, or window-type transformers are acceptable; and except for window-type units installed over insulated buses, transformers shall have a BIL rating consistent with the rated BIL of the associated switchgear or electric power apparatus bushings, buses or conductors. Current transformers shall have the indicated ratios. The continuous thermal-current rating factor shall not be less than 2.0. Other thermal and mechanical ratings of current transformers and their primary leads shall be coordinated with the design of the circuit breaker and shall be not less than the momentary rating of the associated circuit breaker. Circuit protectors shall be provided across secondary leads of the current transformers to prevent the accident open-circuiting of the transformers while energized. Each terminal of each current transformer shall be connected to a short-circuiting terminal block in the circuit interrupting mechanism cabinet, power transformer terminal cabinet, and in the associated instrument and relay cabinets.

2.10.4.3 NOT USED

2.10.4.4 NOT USED

2.10.4.5 Current Transformers for Kwh and Demand Metering (Low-Voltage)

Current transformers shall conform to IEEE C57.13. Provide current transformers with a metering accuracy Class of 0.3 through B-0.2, with a minimum RF of 4.0 at 30 degrees C, with 600-volt insulations, and 10 kV BIL. Provide butyl-molded, window-type current transformers mounted on the transformer low-voltage bushings. Route current transformer leads in a location as remote as possible from the power transformer secondary cables to permit current measurements to be taken with hook-on-ammeters.

2.10.5 Watthour Meters

Watthour meters shall comply with ANSI C12.1 and ANSI C12.10, except that numbered terminal wiring sequence and case size may be the manufacturer's standard. Watthour meters shall have a 15 minute, cumulative form, demand register meeting ANSI C12.4 and provided with not less than 2-1/2 stators. Watthour demand meters shall have factory-installed electronic pulse initiators meeting the requirements of ANSI C12.1. Pulse initiators shall be solid-state devices incorporating light-emitting diodes, phototransistors, and power transistors, except that mercury-wetted output contacts are acceptable. Initiators shall be totally contained within watthour demand meter enclosures. They shall be capable of operating at speeds up to 500 pulses per minute with no false pulses, and they shall be factory calibrated with no field adjustments being required. Initiators shall be calibrated for a pulse rate output of 1 pulse per 1/4 disc

revolution of the associated meter and shall be compatible with the indicated equipment. Electronic meters shall be "year 2000" compliant.

2.11 SURGE ARRESTERS

Surge arresters shall comply with NEMA LA 1, IEEE C62.1, IEEE C62.2, and IEEE C62.11 and shall be provided where indicated. Arresters in padmount gear shall be distribution class, rated as shown. Arrestors on pole shall be rated heavy-duty riser pole. Arresters for use at elevations in excess of 1.8 km (6000 feet) above mean sea level shall be specifically rated for that purpose. Arresters shall be equipped with mounting brackets suitable for the indicated installations. Arresters shall be of the metal-oxide varistor type.

2.12 GROUNDING AND BONDING

2.12.1 Driven Ground Rods

Ground rods shall be copper-clad steel conforming to UL 467 not less than 19 mm (3/4 inch) in diameter by 3 m (10 feet) in length. Sectional type rods may be used.

2.12.2 Grounding Conductors

Grounding conductors shall be bare, except where installed in conduit with associated phase conductors. Insulated conductors shall be of the same material as phase conductors and green color-coded, except that conductors shall be rated no more than 600 volts. Bare conductors shall be ASTM B 8 soft-drawn unless otherwise indicated. Aluminum is not acceptable.

2.13 CONCRETE AND REINFORCEMENT

Concrete work shall have minimum 20 MPa compressive strength and conform to the requirements of Section 03300 CAST-IN-PLACE STRUCTURAL CONCRETE. Concrete reinforcing shall be as specified in Section 03200 CONCRETE REINFORCEMENT.

2.14 PADLOCKS

Padlocks shall conform to ASTM F 883, Type EPC, size 2.

2.15 CABLE FIREPROOFING SYSTEMS

2.15.1 NOT USED

2.15.2 NOT USED

2.15.3 Plastic Tape

Preapplication plastic tape shall be pressure sensitive, 0.254 mm (10 mil) thick, conforming to UL 510.

2.16 LIQUID DIELECTRICS

Liquid dielectrics for transformers, capacitors, reclosers, and other liquid-filled electrical equipment shall be non-polychlorinated biphenyl (PCB) mineral-oil or less-flammable liquid as specified. Nonflammable fluids shall not be used. Tetrachloroethylene (perchloroethylene) and 1, 2, 4 trichlorobenzene fluids shall not be used. Liquid dielectrics in

retrofitted equipment shall be certified by the manufacturer as having less than 2 parts per million (ppm) PCB content. In lieu of the manufacturer's certification, the Contractor may submit a test sample of the dielectric in accordance with ASTM D 923 and have tests performed per ASTM D 4059 at a testing facility approved by the Contracting Officer. Equipment with test results indicating PCB level exceeding 2 ppm shall be replaced.

2.17 FACTORY TESTS

Factory tests shall be performed, as follows, in accordance with the applicable publications and with other requirements of these specifications. The Contracting Officer shall be notified at least 10 days before the equipment is ready for testing. The Contracting Officer reserves the right to witness the tests.

a. Transformers: Manufacturer's standard routine and design tests in accordance with IEEE C57.12.00.

b. Transformers rated 200 kVA and above: Reduced full-wave, chopped-wave, and full-wave impulse test on each line and neutral terminal, in accordance with IEEE C57.98.

c. Instrument Current Transformers: Manufacturer's standard tests in accordance with IEEE C57.13.

d. Factory Preformed Terminations: Wet withstand voltage tests in accordance with IEEE Std 48 for the next higher BIL level.

2.18 NOT USED

2.19 COORDINATED POWER SYSTEM PROTECTION

Analyses shall be prepared to demonstrate that the equipment selected and system constructed meet the contract requirements for equipment ratings, coordination, and protection. They shall include a load flow analysis, a fault current analysis, and a protective device coordination study. The studies shall be performed by a registered professional engineer with demonstrated experience in power system coordination in the last three years. The Contractor shall provide a list of references complete with points of contact, addresses and telephone numbers. The selection of the engineer is subject to the approval of the Contracting Officer.

2.19.1 Scope of Analyses

The fault current analysis, and protective device coordination study shall begin at: the source bus and extend down to system bused where fault availability is 10,000 amperes (symmetrical) for building/facility 600 volt level distribution buses.

2.19.2 Determination of Facts

The time-current characteristics, features, and nameplate data for each existing protective device shall be determined and documented. The Contractor shall coordinate with the Contracting Officer for fault current availability at the site.

2.19.3 Single Line Diagram

A single line diagram shall be prepared to show the electrical system buses, devices, transformation points, and all sources of fault current (including generator and motor contributions). A fault-impedance diagram or a computer analysis diagram may be provided. Each bus, device or transformation point shall have a unique identifier. If a fault-impedance diagram is provided, impedance data shall be shown. Locations of switches, breakers, and circuit interrupting devices shall be shown on the diagram together with available fault data, and the device interrupting rating.

2.19.4 Fault Current Analysis

2.19.4.1 Method

The fault current analysis shall be performed in accordance with methods described in IEEE Std 242, and IEEE Std 399.

2.19.4.2 Data

Actual data shall be utilized in fault calculations. Bus characteristics and transformer impedances shall be those proposed. Data shall be documented in the report.

2.19.5 Coordinated Study

The study shall demonstrate that the maximum possible degree of selectively has been obtained between devices specified, consistent with protection of equipment and conductors from damage from overloads and fault conditions. The study shall include a description of the coordination of the protective devices in this project. Provide a written narrative that describes: which devices may operate in the event of a fault at each bus; the logic used to arrive at device ratings and settings; situations where system coordination is not achievable due to device limitations (an analysis of any device curves which overlap); coordination between upstream and downstream devices. Composite coordination plots shall be provided on the log-log graph paper.

2.19.6 Study Report

a. The report shall include a narrative describing: the analyses performed; the bases and methods used; and the desired method of coordinated protection of the power system.

b. The study shall include descriptive and technical data for existing devices and new protective devices proposed. The data shall include manufacturers published data, nameplate data, and definition of the fixed or adjustable features of the existing or new protective devices.

c. The report shall document existing power system data including time-current characteristic curves and protective device ratings and settings.

d. The report shall contain fully coordinated composite time-current characteristic curves for each bus in the system, as required to ensure coordinated power system protection between protective devices or equipment. The report shall include recommended ratings and settings of all protective devices in tabulated form.

e. The report shall provide the calculation performed for the

analyses, including computer analysis programs utilized. The name of the software package, developer, and version number shall be provided.

PART 3 EXECUTION

3.1 GENERAL INSTALLATION REQUIREMENTS

Equipment and devices shall be installed and energized in accordance with the manufacturer's published instructions. Circuits installed aerially shall conform to the requirements of Section 16370 ELECTRICAL DISTRIBUTION SYSTEM, AERIAL. Steel conduits installed underground shall be installed and protected from corrosion in conformance with the requirements of Section 16415 ELECTRICAL WORK, INTERIOR. Except as covered herein, excavation, trenching, and backfilling shall conform to the requirements of Section 02316 EXCAVATION, TRENCHING, AND BACKFILLING FOR UTILITIES SYSTEMS. Concrete work shall have minimum 20 MPacompressive strength and conform to the requirements of Section 03300CAST-IN-PLACE STRUCTURAL CONCRETE.

3.1.1 Conformance to Codes

The installation shall comply with the requirements and recommendations of NFPA 70 and IEEE C2 as applicable.

3.1.2 Verification of Dimensions

The Contractor shall become familiar with details of the work, shall verify dimensions in the field, and shall advise the Contracting Officer of any discrepancy before performing any work.

3.2 CABLE AND BUSWAY INSTALLATION

The Contractor shall obtain from the manufacturer an installation manual or set of instructions which addresses such aspects as cable construction, insulation type, cable diameter, bending radius, cable temperature, lubricants, coefficient of friction, conduit cleaning, storage procedures, moisture seals, testing for and purging moisture, etc. The Contractor shall then perform pulling calculations and prepare a pulling plan which shall be submitted along with the manufacturers instructions in accordance with SUBMITTALS.

3.2.1 Cable Installation Plan and Procedure

Cable shall be installed strictly in accordance with the cable manufacturer's recommendations. Each circuit shall be identified by means of a fiber, laminated plastic, or non-ferrous metal tags, or approved equal, in each manhole, handhole, junction box, and each terminal. Each tag shall contain the following information; cable type, conductor size, circuit number, circuit voltage, cable destination and phase identification.

3.2.1.1 Cable Inspection

The cable reel shall be inspected for correct storage positions, signs of physical damage, and broken end seals. If end seal is broken, moisture shall be removed from cable in accordance with the cable manufacturer's recommendations.

3.2.1.2 Duct Cleaning

Duct shall be cleaned with an assembly that consists of a flexible mandrel (manufacturers standard product in lengths recommended for the specific size and type of duct) that is 6.4 mm (1/4 inch) less than inside diameter of duct, 2 wire brushes, and a rag. The cleaning assembly shall be pulled through conduit a minimum of 2 times or until less than a volume of 131 cubic centimeters (8 cubic inches) of debris is expelled from the duct.

3.2.1.3 Duct Lubrication

The cable lubricant shall be compatible with the cable jacket for cable that is being installed. Application of lubricant shall be in accordance with lubricant manufacturer's recommendations.

3.2.1.4 Cable Installation

The Contractor shall provide a cable feeding truck and a cable pulling winch as required. The Contractor shall provide a pulling grip or pulling eye in accordance with cable manufacturer's recommendations. The pulling grip or pulling eye apparatus shall be attached to polypropylene or manilla rope followed by lubricant front end packs and then by power cables. A dynamometer shall be used to monitor pulling tension. Pulling tension shall not exceed cable manufacturer's recommendations. The Contractor shall not allow cables to cross over while cables are being fed into duct. For cable installation in cold weather, cables shall be kept at 10 degrees C (50 degrees F) temperature for at least 24 hours before installation.

3.2.1.5 Cable Installation Plan

The Contractor shall submit a cable installation plan for all cable pulls in accordance with the detail drawings portion of paragraph SUBMITTALS. Cable installation plan shall include:

a. Site layout drawing with cable pulls identified in numeric order of expected pulling sequence and direction of cable pull.

b. List of cable installation equipment.

c. Lubricant manufacturer's application instructions.

d. Procedure for resealing cable ends to prevent moisture from entering cable.

e. Cable pulling tension calculations of all cable pulls.

f. Cable percentage conduit fill.

g. Cable sidewall thrust pressure.

h. Cable minimum bend radius and minimum diameter of pulling wheels used.

i. Cable jam ratio.

j. Maximum allowable pulling tension on each different type and size of conductor.

k. Maximum allowable pulling tension on pulling device.

3.2.2 Duct Line

Medium-voltage cables shall be installed in duct lines where indicated. Cable splices in low-voltage cables shall be made in manholes and handholes only, except as otherwise noted. Neutral and grounding conductors shall be installed in the same duct with their associated phase conductors.

3.3 CABLE JOINTS

Medium-voltage cable joints shall be made by qualified cable splicers only. Qualifications of cable splicers shall be submitted in accordance with paragraph SUBMITTALS. Shields shall be applied as required to continue the shielding system through each entire cable joint. Shields may be integrally molded parts of preformed joints. Shields shall be grounded at each joint or in accordance with manufacturer's recommended practice. Cable joints shall provide insulation and jacket equivalent to that of the associated cable.

3.4 NOT USED

3.5 DUCT LINES

3.5.1 Requirements

Numbers and sizes of ducts shall be as indicated. Duct lines shall be laid with a minimum slope of 100 mm per 30 m. Depending on the contour of the finished grade, the high-point may be at a terminal, a manhole, a handhole, or between manholes or handholes. Short-radius manufactured 90-degree duct bends may be used only for pole or equipment risers, unless specifically indicated as acceptable. The minimum manufactured bend radius shall be 450 mm (18 inches) for ducts of less than 80 mm (3 inch) diameter, and 900 mm (36 inches) for ducts 80 mm (3 inches) or greater in diameter. Otherwise, long sweep bends having a minimum radius of 7.6 m shall be used for a change of direction of more than 5 degrees, either horizontally or vertically. Both curved and straight sections may be used to form long sweep bends, but the maximum curve used shall be 30 degrees and manufactured bends shall be used.

3.5.2 Treatment

Ducts shall be kept clean of concrete, dirt, or foreign substances during construction. Field cuts requiring tapers shall be made with proper tools and match factory tapers. A coupling recommended by the duct manufacturer shall be used whenever an existing duct is connected to a duct of different material or shape. Ducts shall be stored to avoid warping and deterioration with ends sufficiently plugged to prevent entry of any water or solid substances. Ducts shall be thoroughly cleaned before being laid. Plastic ducts shall be stored on a flat surface and protected from the direct rays of the sun.

3.5.3 Concrete Encasement

Ducts requiring concrete encasements shall comply with NFPA 70, except that electrical duct bank configurations for ducts 150 mm (6 inches) in diameter shall be determined by calculation and as shown on the drawings. The separation between adjacent electric power and communication ducts shall conform to IEEE C2. Duct line encasements shall be monolithic construction. Where a connection is made to a previously poured encasement, the new encasement shall be well bonded or doweled to the existing encasement. The Contractor shall submit proposed bonding method

for approval in accordance with the detail drawing portion of paragraph SUBMITTALS. At any point, except railroad and airfield crossings, tops of concrete encasements shall be not less than the cover requirements listed in NFPA 70. Separators or spacing blocks shall be made of steel, concrete, plastic, or a combination of these materials placed not farther apart than 1.2 m on centers. Ducts shall be securely anchored to prevent movement during the placement of concrete and joints shall be staggered at least 150 mm vertically.

3.5.4 Nonencased Direct-Burial

Top of duct lines shall be 1200 mm, but not less than 800 mm below finished grade and shall be installed with a minimum of 75 mm of earth around each duct, except that between adjacent electric power and communication ducts, 300 mm of earth is required. Bottoms of trenches shall be graded toward manholes or handholes and shall be smooth and free of stones, soft spots, and sharp objects. Where bottoms of trenches comprise materials other than sand, a 75 mm layer of sand shall be laid first and compacted to approximate densities of surrounding firm soil before installing ducts. Joints in adjacent tiers of duct shall be vertically staggered at least1 50 mm. The first150 mm layer of backfill cover shall be sand compacted as previously specified. The rest of the excavation shall be backfilled and compacted in 75 to 150 mm layers. Duct banks may be held in alignment with earth. However, high-tiered banks shall use a wooden frame or equivalent form to hold ducts in alignment prior to backfilling.

3.5.5 Installation of Couplings

Joints in each type of duct shall be made up in accordance with the manufacturer's recommendations for the particular type of duct and coupling selected and as approved.

3.5.5.1 NOT USED

3.5.5.2 Plastic Duct

Duct joints shall be made by brushing a plastic solvent cement on insides of plastic coupling fittings and on outsides of duct ends. Each duct and fitting shall then be slipped together with a quick 1/4-turn twist to set the joint tightly.

3.5.6 Duct Line Markers

Duct line markers shall be provided at the ends of long duct line stubouts or for other ducts whose locations are indeterminate because of duct curvature or terminations at completely below-grade structures. In addition to markers, a 0.127 mm (5 mil)brightly colored plastic tape, not less than 75 mm (3 inches) in width and suitably inscribed at not more than 3 m (10 feet) on centers with a continuous metallic backing and a corrosion-resistant 0.0254 mm (1 mil) metallic foil core to permit easy location of the duct line, shall be placed approximately 300 mm below finished grade levels of such lines.

3.6 MANHOLES, HANDHOLES, AND PULLBOXES

3.6.1 NOT USED

3.6.2 NOT USED

3.6.3 NOT USED

3.6.4 NOT USED

3.6.5 Pullboxes

Pullbox tops shall be flush with sidewalks or curbs or placed 15 mm above surrounding grades when remote from curbed roadways or sidewalks. Covers shall be marked "Low-Voltage" and provided with 2 lifting eyes and 2 hold-down bolts. Each box shall have a suitable opening for a ground rod. Conduit, cable, ground rod entrances, and unused openings shall be sealed with mortar.

3.7 PAD-MOUNTED EQUIPMENT INSTALLATION

Pad-mounted equipment, shall be installed on concrete pads in accordance with the manufacturer's published, standard installation drawings and procedures, except that they shall be modified to meet the requirements of this document. Units shall be installed so that they do not damage equipment or scratch painted or coated surfaces. After installation, surfaces shall be inspected and scratches touched up with a paint or coating provided by the manufacturer especially for this purpose.

3.7.1 Concrete Pads

3.7.1.1 Construction

Concrete pads for pad-mounted electrical equipment shall be poured-in-place. Pads shall be constructed as indicated, except that exact pad dimensions and mounting details are equipment specific and are the responsibility of the Contractor. Tops of concrete pads shall be level and shall project 100 mm above finished paving or grade and sloped to drain. Edges of concrete pads shall have 20 mm chamfer. Conduits for primary, secondary, and grounding conductors shall be set in place prior to placement of concrete pads. Where grounding electrode conductors are installed through concrete pads, PVC conduit sleeves shall be installed through the concrete to provide physical protection. To facilitate cable installation and termination, the concrete pad shall be provided with a rectangular hole below the primary and secondary compartments, sized in accordance with the manufacturer's recommended dimensions. Upon completion of equipment installation the rectangular hole shall be filled with masonry grout.

3.7.1.2 Concrete and Reinforcement

Concrete work shall have minimum 20 MPa compressive strength and comform to the requirements of Section 03300 CAST-IN-PLACE STRUCTURAL CONCRETE. Concrete pad reinforcement shall be in accordance with Section 03200 CONCRETE REINFORCEMENT.

3.7.1.3 Sealing

When the installation is complete, the Contractor shall seal all conduit and other entries into the equipment enclosure with an approved sealing compound. Seals shall be of sufficient strength and durability to protect all energized live parts of the equipment from rodents, insects, or other foreign matter.

3.7.2 Padlocks

Padlocks shall be provided for pad-mounted equipment and for each fence gate. Padlocks shall be keyed as directed by the Contracting Officer.

3.8 CONNECTIONS BETWEEN AERIAL AND UNDERGROUND SYSTEMS

Connections between aerial and underground systems shall be made as shown. Underground cables shall be extended up poles in conduit to cable terminations. Conduits shall be secured to the poles by 2-hole galvanized steel pipe straps spaced not more than 3 m apart and with 1 strap not more than 300 mm from any bend or termination. Cable guards shall be secured to poles in accordance with the manufacturer's published procedures. Conduits shall be equipped with bushings to protect cables and minimize water entry. Capnut potheads shall be used to terminate medium-voltage multiple-conductor cable. Cables shall be supported by devices separate from the conduit or guard, near their point of exit from the conduit or guard.

3.9 CONNECTIONS TO BUILDINGS

Cables shall be extended into the various buildings as indicated, and shall be connected to the first applicable termination point in each building. Interfacing with building interior conduit systems shall be at conduit stubouts terminating 1.5 m outside of a building and below finished grade as specified and provided under Section 16415 ELECTRICAL WORK, INTERIOR. After installation of cables, conduits shall be sealed with caulking compound to prevent entrance of moisture or gases into buildings.

3.10 GROUNDING

A ground ring consisting of the indicated configuration of bare copper conductors and driven ground rods shall be installed around pad-mounted equipment as shown. Equipment frames of metal-enclosed equipment, and other noncurrent-carrying metal parts, such as cable shields, cable sheaths and armor, and metallic conduit shall be grounded. At least 2 connections shall be provided from a transformer to the ground mat.

3.10.1 Grounding Electrodes

Grounding electrodes shall be installed as shown on the drawings and as follows:

a. Driven rod electrodes - Unless otherwise indicated, ground rods shall be driven into the earth until the tops of the rods are approximately 300 mm below finished grade.

b. Ground ring - A ground ring shall be installed as shown consisting of bare copper conductors installed 300 mm, plus or minus 75 mm, below finished top of soil grade. Ground ring conductors shall be sized as shown.

c. Additional electrodes - When the required ground resistance is not met, additional electrodes shall be provided interconnected with grounding conductors to achieve the specified ground resistance. The additional electrodes will be up to three, 3 m (10 feet) rods spaced a minimum of 3.7 m apart. In high ground resistance, UL listed chemically charged ground rods may be used. If the resultant resistance exceeds 25 ohms measured not less than 48 hours after rainfall, the Contracting Officer shall be notified

immediately.

3.10.2 Grounding and Bonding Connections

Connections above grade shall be made by the fusion-welding process or with bolted solderless connectors, in compliance with UL 467, and those below grade shall be made by a fusion-welding process. Where grounding conductors are connected to aluminum-composition conductors, specially treated or lined copper-to-aluminum connectors suitable for this purpose shall be used.

3.10.3 Grounding and Bonding Conductors

Grounding and bonding conductors include conductors used to bond transformer enclosures and equipment frames to the grounding electrode system. Grounding and bonding conductors shall be sized as shown, and located to provide maximum physical protection. Bends greater than 45 degrees in ground conductors are not permitted. Routing of ground conductors through concrete shall be avoided. When concrete penetration is necessary, nonmetallic conduit shall be cast flush with the points of concrete entrance and exit so as to provide an opening for the ground conductor, and the opening shall be sealed with a suitable compound after installation.

3.10.4 Surge Arrester Grounding

Surge arresters and neutrals shall be bonded directly to the transformer enclosure and then to the grounding electrode system with a bare copper conductor, sized as shown. Lead lengths shall be kept as short as practicable with no kinks or sharp bends.

3.11 FIELD TESTING

3.11.1 General

Field testing shall be performed in the presence of the Contracting Officer. The Contractor shall notify the Contracting Officer 7 days prior to conducting tests. The Contractor shall furnish all materials, labor, and equipment necessary to conduct field tests. The Contractor shall perform all tests and inspections recommended by the manufacturer unless specifically waived by the Contracting Officer. The Contractor shall maintain a written record of all tests which includes date, test performed, personnel involved, devices tested, serial number and name of test equipment, and test results. Field test reports shall be signed and dated by the Contractor.

3.11.2 Safety

The Contractor shall provide and use safety devices such as rubber gloves, protective barriers, and danger signs to protect and warn personnel in the test vicinity. The Contractor shall replace any devices or equipment which are damaged due to improper test procedures or handling.

3.11.3 Ground-Resistance Tests

The resistance of each grounding electrode system shall be measured using the fall-of-potential method defined in IEEE Std 81. Ground resistance measurements shall be made before the electrical distribution system is energized and shall be made in normally dry conditions not less than 48

hours after the last rainfall. Resistance measurements of separate grounding electrode systems shall be made before the systems are bonded together below grade. The combined resistance of separate systems may be used to meet the required resistance, but the specified number of electrodes must still be provided.

a. Single rod electrode - 25 ohms.

b. Multiple rod electrodes - 10 ohms.

c. Ground ring - 10 ohms.

3.11.4 NOT USED

3.11.5 Medium-Voltage Cable Test

After installation and before the operating test or connection to an existing system, the medium-voltage cable system shall be given a high potential test. Direct-current voltage shall be applied on each phase conductor of the system by connecting conductors as one terminal and connecting grounds or metallic shieldings or sheaths of the cable as the other terminal for each test. Prior to making the test, the cables shall be isolated by opening applicable protective devices and disconnecting equipment. The test shall be conducted with all splices, connectors, and terminations in place. The method, voltage, length of time, and other characteristics of the test for initial installation shall be in accordance with NEMA WC 8 for the particular type of cable installed, except that 28 kV and 35 kV insulation test voltages shall be in accordance with AEIC CS6 as applicable, and shall not exceed the recommendations of IEEE Std 404 for cable joints and IEEE Std 48 for cable terminations unless the cable and accessory manufacturers indicate higher voltages are acceptable for testing. Should any cable fail due to a weakness of conductor insulation or due to defects or injuries incidental to the installation or because of improper installation of cable, cable joints, terminations, or other connections, the Contractor shall make necessary repairs or replace cables as directed. Repaired or replaced cables shall be retested.

3.11.6 Low-Voltage Cable Test

Low-voltage cable, complete with splices, shall be tested for insulation resistance after the cables are installed, in their final configuration, ready for connection to the equipment, and prior to energization. The test voltage shall be 500 volts dc, applied for one minute between each conductor and ground and between all possible combinations conductors in the same trench, duct, or cable, with all other conductors in the same trench, duct, or conduit. The minimum value of insulation shall be:

R in megohms = (rated voltage in kV + 1) x 304,800/(length of cable in meters)

Each cable failing this test shall be repaired or replaced. The repaired cable shall be retested until failures have been eliminated.

3.11.7 Liquid-Filled Transformer Tests

The following field tests shall be performed on all liquid-filled transformers. Pass-fail criteria shall be in accordance with transformer manufacturer's specifications.

a. Insulation resistance test phase-to-ground.

b. Turns ratio test.

c. Correct phase sequence.

d. Correct operation of tap changer.

3.11.8 NOT USED

3.11.9 NOT USED

3.11.10 NOT USED

3.11.11 NOT USED

3.11.12 Pre-Energization Services

Calibration, testing, adjustment, and placing into service of the installation shall be accomplished by a manufacturer's product field service engineer or independent testing company with a minimum of 2 years of current product experience. The following services shall be performed on the equipment listed below. These services shall be performed subsequent to testing but prior to the initial energization. The equipment shall be inspected to ensure that installation is in compliance with the recommendations of the manufacturer and as shown on the detail drawings. Terminations of conductors at major equipment shall be inspected to ensure the adequacy of connections. Bare and insulated conductors between such terminations shall be inspected to detect possible damage during installation. If factory tests were not performed on completed assemblies, tests shall be performed after the installation of completed assemblies. Components shall be inspected for damage caused during installation or shipment to ensure packaging materials have been removed. Components capable of being both manually and electrically operated shall be operated manually prior to the first electrical operation. Components capable of being calibrated, adjusted, and tested shall be calibrated, adjusted, and tested in accordance with the instructions of the equipment manufacturer. Items for which such services shall be provided, but are not limited to, are the following:

a. Pad-mounted transformers

3.11.13 Operating Tests

After the installation is completed, and at such times as the Contracting Officer may direct, the Contractor shall conduct operating tests for approval. The equipment shall be demonstrated to operate in accordance with the requirements herein. An operating test report shall be submitted in accordance with paragraph SUBMITTALS.

3.12 NOT USED

3.13 ACCEPTANCE

Final acceptance of the facility will not be given until the Contractor has successfully completed all tests and after all defects in installation, material or operation have been corrected.

-- End of Section --

SECTION 16415

ELECTRICAL WORK, INTERIOR

PART 1 GENERAL

1.1 REFERENCES

The publications listed below form a part of this specification to the extent referenced. The publications are referred to in the text by basic designation only.

AMERICAN NATIONAL STANDARDS INSTITUTE (ANSI)

ANSI C39.1	(1981; R 1992) Requirements for Electrical Analog Indicating Instruments
ANSI C82.4	(1992) Ballasts for High-Intensity-Discharge and Low-Pressure Sodium Lamps (Multiple-Supply Type)

AMERICAN SOCIETY FOR TESTING AND MATERIALS (ASTM)

ASTM B 1	(1990) Hard-Drawn Copper Wire
ASTM B 8	(1993) Concentric-Lay-Stranded Copper Conductors, Hard, Medium-Hard, or Soft
ASTM D 709	(1992) Laminated Thermosetting Materials

CODE OF FEDERAL REGULATIONS (CFR)

47 CFR 18	Industrial, Scientific, and Medical Equipment

INSTITUTE OF ELECTRICAL AND ELECTRONICS ENGINEERS (IEEE)

IEEE C62.41	(1991) Surge Voltages in Low-Voltage AC Power Circuits
IEEE Std 81	(1983) Guide for Measuring Earth Resistivity, Ground Impedance, and Earth Surface Potentials of a Ground System (Part 1)
IEEE Std 242	(1986; R 1991) Recommended Practice for Protection and Coordination of Industrial and Commercial Power Systems
IEEE Std 399	(1990) Recommended Practice for Industrial and Commercial Power Systems Analysis

NATIONAL ELECTRICAL MANUFACTURERS ASSOCIATION (NEMA)

NEMA AB 1	(1993) Molded Case Circuit Breakers and Molded Case Switches

NEMA FU 1	(1986) Low Voltage Cartridge Fuses
NEMA ICS 1	(1993) Industrial Control and Systems
NEMA ICS 2	(1993) Industrial Control and Systems Controllers, Contactors, Overload Relays Rated Not More Than 2,000 Volts AC or 750 DC
NEMA ICS 3	(1993) Industrial Control and Systems Factory Built Assemblies
NEMA ICS 6	(1993) Industrial Control and Systems Enclosures
NEMA LE 4	(1987) Recessed Luminaires, Ceiling Compatibility
NEMA MG 1	(1993; Rev 1; Rev 2; Rev 3) Motors and Generators
NEMA MG 10	(1994) Energy Management Guide for Selection and Use of Polyphase Motors
NEMA OS 1	(1989) Sheet-Steel Outlet Boxes, Device Boxes, Covers, and Box Supports
NEMA PB 1	(1990) Panelboards
NEMA RN 1	(1989) Polyvinyl-Chloride (PVC) Externally Coated Galvanized Rigid Steel Conduit and Intermediate Metal Conduit
NEMA TC 2	(1990) Electrical Polyvinyl Chloride (PVC) Tubing (EPT) and Conduit (EPC-40 and EPC-80)
NEMA TC 13	(1993) Electrical Nonmetallic Tubing (ENT)
NEMA VE 1	(1991) Metal Cable Tray Systems
NEMA WD 1	(1983; R 1989) General Requirements for Wiring Devices
NEMA WD 6	(1988) Wiring Devices - Dimensional Requirements

NATIONAL FIRE PROTECTION ASSOCIATION (NFPA)

NFPA 70	(1999) National Electrical Code
NFPA 101	(1997) Safety to Life from Fire in Buildings and Structures

UNDERWRITERS LABORATORIES (UL)

UL-03	(1996; Supple) Electrical Construction Materials Directory
UL 1	(1993; Rev thru Jan 1995) Flexible Metal

	Conduit
UL 6	(1993; Rev Mar 1996) Rigid Metal Conduit
UL 20	(1995; Rev thru Apr 1997) General-Use Snap Switches
UL 50	(1995; Rev Oct 1996) Enclosures for Electrical Equipment
UL 67	(1993; Rev thru Dec 1993) Panelboards
UL 83	(1996) Thermoplastic-Insulated Wires and Cables
UL 98	(1994; R Oct 1995) Enclosed and Dead-Front Switches
UL 198D	(1995) Class K Fuses
UL 198E	(1988; Rev Jul 1988) Class R Fuses
UL 198G	(1988; Rev May 1988) Fuses for Supplementary Overcurrent Protection
UL 360	(1996; Rev Mar 1997) Liquid-Tight Flexible Steel Conduit
UL 467	(1993; Rev thru Aug 1996) Grounding and Bonding Equipment
UL 486A	(1991; Rev Oct 1991) Wire Connectors and Soldering Lugs for Use with Copper Conductors
UL 486C	(1997) Splicing Wire Connectors
UL 486E	(1994; Rev thru Feb 1997) Equipment Wiring Terminals for Use with Aluminum and/or Copper Conductors
UL 489	(1996; Rev May 1997) Molded-Case Circuit Breakers, Molded-Case Switches, and Circuit-Breaker Enclosures
UL 508	(1993) Industrial Control Equipment
UL 510	(1994) Insulating Tape
UL 512	(1993; R Dec 1995) Fuseholders
UL 514A	(1996) Metallic Outlet Boxes
UL 514B	(1996) Fittings for Conduit and Outlet Boxes
UL 514C	(1996) Nonmetallic Outlet Boxes, Flush-Device Boxes, and Covers
UL 542	(1994; Rev May 1997) Lampholders, Starters,

	and Starter Holders for Fluorescent Lamps
UL 651	(1995; Rev Jan 1997) Schedule 40 and 80 Rigid PVC Conduit
UL 651A	(1995; Rev Sep 1996) Type EB and A Rigid PVC Conduit and HDPE Conduit
UL 797	(1993; Rev thru Mar 1997) Electrical Metallic Tubing
UL 817	(1994; Rev thru Feb 1997) Cord Sets and Power-Supply Cords
UL 845	(1995; Rev Feb 1996) Motor Control Centers
UL 854	(1996; Rev May 1996) Service-Entrance Cables
UL 869A	(1993; Rev Apr 1994) Reference Standard for Service Equipment
UL 924	(1995; Rev thru May 95) Emergency Lighting and Power Equipment
UL 935	(1995; Rev thru Apr 1997)Fluorescent-Lamp Ballasts
UL 943	(1993; Rev thru Mar 1997)Ground-Fault Circuit Interrupters
UL 1004	(1994; Rev thru Feb 1997) Electric Motors
UL 1029	(1994; Rev Sep 1995) High-Intensity-Discharge Lamp Ballasts
UL 1242	(1996) Intermediate Metal Conduit
UL 1449	(1985; Errata Apr 1986) Transient Voltage Surge Suppressors
UL 1570	(1995) Fluorescent Lighting Fixtures
UL 1572	(1995; Rev thru Sep 96) High Intensity Discharge Lighting Fixtures

1.2 GENERAL

1.2.1 Rules

The installation shall conform to the requirements of NFPA 70 and NFPA 101, unless more stringent requirements are indicated herein or shown.

1.2.2 Coordination

The drawings indicate the extent and the general location and arrangement of equipment, conduit, and wiring. The Contractor shall become familiar with all details of the work and verify all dimensions in the field so that the outlets and equipment shall be properly located and readily accessible. Lighting fixtures, outlets, and other equipment and materials shall be

located to avoid interference with mechanical or structural features; otherwise, lighting fixtures shall be symmetrically located according to the room arrangement when uniform illumination is required, or asymmetrically located to suit conditions fixed by design and shown. Raceways, junction and outlet boxes, and lighting fixtures shall not be supported from sheet metal roof decks. If any conflicts occur necessitating departures from the drawings, details of and reasons for departures shall be submitted and approved prior to implementing any change. The Contractor shall coordinate electrical work with the HVAC and electrical drawings and specifications and provide power related wiring.

1.2.3 Special Environments

1.2.3.1 Weatherproof Locations

Wiring, Fixtures, and equipment in designated locations shall conform to NFPA 70 requirements for installation in damp or wet locations.

1.2.3.2 NOT USED

1.2.3.3 Ducts, Plenums and Other Air-Handling Spaces

Wiring and equipment in ducts, plenums and other air-handling spaces shall be installed using materials and methods in conformance with NFPA 70unless more stringent requirements are indicated in this specification or on the contract drawings.

1.2.4 Standard Products

Material and equipment shall be a standard product of a manufacturer regularly engaged in the manufacture of the product and shall essentially duplicate items that have been in satisfactory use for at least 2 years prior to bid opening.

1.2.5 NAMEPLATES

1.2.5.1 Identification Nameplates

Major items of electrical equipment and major components shall be permanently marked with an identification name to identify the equipment by type or function and specific unit number as indicated. Designation of motors shall coincide with their designation in the motor control center or panel. Unless otherwise specified, identification nameplates shall be made of laminated plastic in accordance with ASTM D 709 with black outer layers and a white core. Edges shall be chamfered. Plates shall be fastened with black-finished round-head drive screws, except motors, or approved nonadhesive metal fasteners. When the nameplate is to be installed on an irregular-shaped object, the Contractor shall devise an approved support suitable for the application and ensure the proper installation of the supports and nameplates. In all instances, the nameplate shall be installed in a conspicuous location. At the option of the Contractor, the equipment manufacturer's standard embossed nameplate material with black paint-filled letters may be furnished in lieu of laminated plastic. The front of each panelboard, motor control center, switchgear, and switchboard shall have a nameplate to indicate the phase letter, corresponding color and arrangement of the phase conductors. The following equipment, as a minimum, shall be provided with identification nameplates:

Minimum 6.4 mm	Minimum 3.2 mm

High Letters	High Letters
Panelboards	Control Power Transformers
Starters	Control Devices
Safety Switches	Instrument Transformers
Motor Control Centers	
Transformers	
Equipment Enclosures	
Switchgear	
Switchboards	
Motors	

Each panel, section, or unit in motor control centers, switchgear or similar assemblies shall be provided with a nameplate in addition to nameplates listed above, which shall be provided for individual compartments in the respective assembly, including nameplates which identify "future," "spare," and "dedicated" or "equipped spaces."

1.2.6 As-Built Drawings

Following the project completion or turnover, within 30 days the Contractor shall furnish two sets of as-built drawings to the Contracting Officer.

1.3 SUBMITTALS

Government approval is required for submittals with a "GA" designation; submittals having an "FIO" designation are for information only. The following shall be submitted in accordance with Section 01330 SUBMITTAL PROCEDURES:

SD-01 Data

Fault Current and Protective Device Coordination Study; GA.

The study shall be submitted along with protective device equipment submittals. No time extensions or similar contract modifications will be granted for work arising out of the requirements for this study. Approval of protective devices proposed shall be based on recommendations of this study, The Government shall not be held responsible for any changes to equipment, device ratings, settings, or additional labor for installation of equipment or devices ordered and/or procured prior to approval of the study.

Manufacturer's Catalog; GA.

Data composed of catalog cuts, brochures, circulars, specifications, product data, and printed information in sufficient detail and scope to verify compliance with the requirements of the contract documents.

Material, Equipment, and Fixture Lists; FIO.

A complete itemized listing of equipment and materials proposed for incorporation into the work. Each entry shall include an item number, the quantity of items proposed, and the name of the manufacturer of each item.

SD-04 Drawings

Interior Electrical Equipment; GA.

Detail drawings consisting of equipment drawings, illustrations, schedules, instructions, diagrams, and other information necessary to define the installation. Detail drawings shall show the rating of items and systems and how the components of an item and system are assembled, function together, and how they will be installed on the project. Data and drawings for component parts of an item or system shall be coordinated and submitted as a unit. Data and drawings shall be coordinated and included in a single submission. Multiple submissions for the same equipment or system are not acceptable except where prior approval has been obtained from the Contracting Officer. In such cases, a list of data to be submitted later shall be included with the first submission. Detail drawings shall show physical arrangement, construction details, connections, finishes, materials used in fabrication, provisions for conduit or busway entrance, access requirements for installation and maintenance, physical size, electrical characteristics, foundation and support details, and equipment weight. Drawings shall be drawn to scale and/or dimensioned. Optional items shall be clearly identified as included or excluded. Detail drawings shall as a minimum include:

a. Motors and rotating machinery.

b. Single line electrical diagrams including primary, metering, sensing and relaying, control wiring, and control logic.

c. Sway bracing for suspended luminaires.

Electrical drawings including single-line diagrams, and schematics or elementary diagrams of each electrical system; internal wiring and field connection diagrams of each electrical device when published by the manufacturer; wiring diagrams of cabinets, panels, units, or separate mountings; interconnection diagrams that show the wiring between separate components of assemblies; field connection diagrams that show the termination of wiring routed between separate items of equipment; internal wiring diagrams of equipment showing wiring as actually provided for this project. Field wiring connections shall be clearly identified.

If departures from the contract drawings are deemed necessary by the Contractor, complete details of such departures, including changes in related portions of the project and the reasons why, shall be submitted with the detail drawings. Approved departures shall be made at no additional cost to the Government.

As-Built Drawings; GA.

The as-built drawings shall be a record of the construction as installed. The drawings shall include all the information shown on the contract drawings, deviations, modifications, and changes from the contract drawings, however minor. The as-built drawings shall be kept at the job site and updated daily. The as-built drawings shall be a full-sized set of prints marked to reflect all deviations, changes, and modifications. The as-built drawings shall be complete and show the location, size, dimensions, part identification, and other information. Additional sheets may be added. The as-built drawings shall be jointly inspected for accuracy and completeness by the Contractor's quality control representative and by the Contracting Officer prior to the submission of each monthly pay estimate. Upon completion of the work, the Contractor shall submit three full sized sets of the marked prints to the Contracting Officer for approval. If upon review, the as-built drawings are found to

contain errors and/or omissions, they will be returned to the Contractor for correction. The Contractor shall correct and return the as-built drawings to the Contracting Officer for approval within ten calendar days from the time the drawings are returned to the Contractor.

SD-08 Statements

On-Site Test; GA.

A detailed description of the Contractor's proposed procedures for on-site tests.

SD-09 Reports

Factory Test Reports; GA.

Six copies of the information described below in 216 x 280 mm binders having a minimum of 5 rings from which material may readily be removed and replaced, including a separate section for each test. Sections shall be separated by heavy plastic dividers with tabs.

a. A list of equipment used, with calibration certifications.

b. A copy of measurements taken.

c. The dates of testing.

d. The equipment and values to be verified.

e. The conditions specified for the test.

f. The test results, signed and dated.

g. A description of adjustments made.

Field Test Plan; GA.

A detailed description of the Contractor's proposed procedures for on-site test submitted 20 days prior to testing the installed system. No field test will be performed until the test plan is approved. The test plan shall consist of complete field test procedures including tests to be performed, test equipment required, and tolerance limits.

Field Test Reports; GA.

Six copies of the information described below in 216 x 280 mm binders having a minimum of 5 rings from which material may readily be removed and replaced, including a separate section for each test. Sections shall be separated by heavy plastic dividers with tabs.

a. A list of equipment used, with calibration certifications.

b. A copy of measurements taken.

c. The dates of testing.

d. The equipment and values to be verified.

e. The conditions specified for the test.

f. The test results, signed and dated.

g. A description of adjustments made.

h. Final position of controls and device settings.

SD-13 Certificates

Materials and Equipment; GA.

The label or listing of the Underwriters Laboratories, Inc., will be accepted as evidence that the materials or equipment conform to the applicable standards of that agency. In lieu of this label or listing, a statement from a nationally recognized, adequately equipped testing agency indicating that the items have been tested in accordance with required procedures and that the materials and equipment comply with all contract requirements will be accepted. Items which are required to be listed and labeled in accordance with Underwriters Laboratories must be affixed with a UL label that states that it is UL listed. No exceptions or waivers will be granted to this requirement. Materials and equipment will be approved based on the manufacturer's published data.

For other than equipment and materials specified to conform to UL publications, a manufacturer's statement indicating complete compliance with the applicable standard of the American Society for Testing and Materials, National Electrical Manufacturers Association, or other commercial standard, is acceptable.

1.4 WORKMANSHIP

Materials and equipment shall be installed in accordance with NFPA 70, recommendations of the manufacturer, and as shown.

PART 2 PRODUCTS

Products shall conform to the respective publications and other requirements specified below. Materials and equipment not listed below shall be as specified elsewhere in this section. Items of the same classification shall be identical including equipment, assemblies, parts, and components.

2.1 NOT USED

2.2 CABLES AND WIRES

Conductors No. 8 AWG and larger diameter shall be stranded. Conductors No. 10 AWG and smaller diameter shall be solid, except that conductors for remote control, alarm, and signal circuits, classes 1, 2, and 3, shall be stranded unless specifically indicated otherwise. Conductor sizes and ampacities shown are based on copper, unless indicated otherwise. All conductors shall be copper.

2.2.1 NOT USED

2.2.2 NOT USED

2.2.3 Insulation

Unless indicated otherwise, or required by NFPA 70, power and lighting wires shall be 600-volt, Type THWN, THHN, or THW conforming to UL 83, except that grounding wire may be type TW conforming to UL 83; remote-control and signal circuits shall be Type TW, THW or TF, conforming to UL 83. Where lighting fixtures require 90-degree Centigrade (C) conductors, provide only conductors with 90-degree C insulation or better.

2.2.4 Bonding Conductors

ASTM B 1, solid bare copper wire for sizes No. 8 AWG and smaller diameter; ASTM B 8, Class B, stranded bare copper wire for sizes No. 6 AWG and larger diameter.

2.2.5 Service Entrance Cables

Service entrance (SE) and underground service entrance (USE) cables, UL 854.

2.2.6 NOT USED

2.2.7 Public Address Cable

NFPA 70, Type CMP 2 conductor, 16 gauge, overall shield.

2.2.8 NOT USED

2.2.9 NOT USED

2.2.10 NOT USED

2.2.11 Tray Cable or Power Limited Tray Cable

UL listed; Type TC or PLTC.

2.2.12 Cord Sets and Power-Supply Cords

UL 817.

2.3 CABLE TRAYS

NEMA VE 1 cable trays shall form a wireway system, and shall be of nominal 75 mm depth. Cable trays shall be constructed of aluminum. Trays shall include splice and end plates, dropouts, and miscellaneous hardware. Edges, fittings, and hardware shall be finished free from burrs and sharp edges. Fittings shall have not less than the load-carrying ability of straight tray sections and shall have manufacturer's minimum standard radius. Radius of bends shall be 610 mm.

2.3.1 NOT USED

2.3.2 Ladder

Ladder-type cable trays shall be of nominal 300 mm width. Rung spacing shall be on 230 mm maximum centers.

2.4 TRANSIENT VOLTAGE SURGE PROTECTION

Transient voltage surge suppressors shall be provided as indicated. Surge suppressors shall meet the requirements of IEEE C62.41 and be UL listed and labeled as having been tested in accordance with UL 1449. Surge suppressor

ratings shall be 480Y/277 volts rms, 3-phase, 4-wire with ground with transient suppression voltage of 800 volts. Fuses shall not be used as surge suppression.

2.5 NOT USED

2.6 CIRCUIT BREAKERS

2.6.1 MOLDED-CASE CIRCUIT BREAKERS

Molded-case circuit breakers shall conform to NEMA AB 1 and UL 489 for circuit breakers and circuit breaker enclosures. Circuit breakers may be installed in panelboards, switchboards, enclosures, motor control centers, or combination motor controllers.

2.6.1.1 Construction

Circuit breakers shall be suitable for mounting and operating in any position. Lug shall be listed for copper and aluminum conductors in accordance with UL 486E. Single-pole circuit breakers shall be full module size with not more than one pole per module. Multi-pole circuit breakers shall be of the common-trip type having a single operating handle such that an overload or short circuit on any one pole will result in all poles opening simultaneously. Sizes of 100 amperes or less may consist of single-pole breakers permanently factory assembled into a multi-pole unit having an internal, mechanical, nontamperable common-trip mechanism and external handle ties. All circuit breakers shall have a quick-make, quick-break overcenter toggle-type mechanism, and the handle mechanism shall be trip-free to prevent holding the contacts closed against a short-circuit or sustained overload. All circuit breaker handles shall assume a position between "ON" and "OFF" when tripped automatically. All ratings shall be clearly visible.

2.6.1.2 Ratings

Voltage ratings shall be not less than the applicable circuit voltage. The interrupting rating of the circuit breakers shall be at least equal to the available short-circuit current at the line terminals of the circuit breaker and correspond to the UL listed integrated short-circuit current rating specified for the panelboards and switchboards. Molded-case circuit breakers shall have nominal voltage ratings, maximum continuous-current ratings, and maximum short-circuit interrupting ratings in accordance with NEMA AB 1. Ratings shall be coordinated with system X/R ratio.

2.6.1.3 NOT USED

2.6.1.4 Thermal-Magnetic Trip Elements

Thermal magnetic circuit breakers shall be provided as shown. Automatic operation shall be obtained by means of thermal-magnetic tripping devices located in each pole providing inverse time delay and instantaneous circuit protection. The instantaneous magnetic trip shall be adjustable and accessible from the front of all circuit breakers on frame sizes above 100 amperes.

2.6.2 Solid-State Trip Elements

Solid-state circuit breakers shall be provided as shown or required for coordination. All electronics shall be self-contained and require no

external relaying, power supply, or accessories. Printed circuit cards shall be treated to resist moisture absorption, fungus growth, and signal leakage. All electronics shall be housed in an enclosure which provides protection against arcs, magnetic interference, dust, and other contaminants. Solid-state sensing shall measure true RMS current with error less than one percent on systems with distortions through the 13th harmonic. Peak or average actuating devices are not acceptable. Current sensors shall be torodial construction, encased in a plastic housing filled with epoxy to protect against damage and moisture and shall be integrally mounted on the breaker. Where indicated on the drawings, circuit breaker frames shall be rated for 100 percent continuous duty. Circuit breakers shall have tripping features as shown on the drawings and as described below:

a. Long-time current pick-up, adjustable from 50 percent to 100 percent of continuous current rating.

b. Adjustable long-time delay.

c. Short-time current pick-up, adjustable from 1.5 to 9 times long-time current setting.

d. Fixed short-time delay.

e. Instantaneous current pick-up, adjustable from 1.5 to 9 times long-time current setting.

2.6.3 NOT USED

2.6.4 SWD Circuit Breakers

Circuit breakers rated 15 amperes and intended to switch 277 volts or less fluorescent lighting loads shall be marked "SWD."

2.6.5 HACR Circuit Breakers

Circuit breakers 60 amperes or below, 240 volts, 1-pole or 2-pole, intended to protect multi-motor and combination-load installations involved in heating, air conditioning, and refrigerating equipment shall be marked "Listed HACR Type."

2.6.6 NOT USED

2.6.7 NOT USED

2.6.8 Ground Fault Circuit Interrupters

UL 943. Breakers equipped with ground fault circuit interrupters shall have ground fault class, interrupting capacity, and voltage and current ratings as indicated.

2.7 NOT USED

2.8 CONDUIT AND TUBING

2.8.1 Electrical, Zinc-Coated Steel Metallic Tubing (EMT)

UL 797

2.8.2 Electrical Nonmetallic Tubing (ENT)

NEMA TC 13.

2.8.3 NOT USED

2.8.4 Flexible Conduit and Steel

General-purpose type, UL 1; liquid tight, UL 360.

2.8.5 Intermediate Metal Conduit

UL 1242.

2.8.6 PVC Coated Rigid Steel Conduit

NEMA RN 1.

2.8.7 NOT USED

2.8.8 Rigid Metal Conduit

UL 6.

2.8.9 Rigid Plastic

NEMA TC 2, UL 651 and UL 651A.

2.9 CONDUIT AND DEVICE BOXES AND FITTINGS

2.9.1 Boxes, Metallic Outlet

NEMA OS 1 and UL 514C.

2.9.2 NOT USED

2.9.3 NOT USED

2.9.4 Boxes, Switch (Enclosed), Surface-Mounted

UL 98.

2.9.5 Fittings for Conduit and Outlet Boxes

UL 514B.

2.9.6 NOT USED

2.9.7 Fittings, PVC, for Use with Rigid PVC Conduit and Tubing

UL 514B.

2.10 CONDUIT COATINGS PLASTIC RESIN SYSTEM

NEMA RN 1, Type A-40.

2.11 CONNECTORS, WIRE PRESSURE

2.11.1 For Use With Copper Conductors

UL 486A.

2.12 ELECTRICAL GROUNDING AND BONDING EQUIPMENT

UL 467.

2.12.1 Ground Rods

Ground rods shall be of copper-clad steel conforming to UL 467 not less than 19 mm in diameter by 3 meter in length sectional type rods may be used driven full length into the earth.

2.13 ENCLOSURES

NEMA ICS 6 unless otherwise specified.

2.13.1 Cabinets and Boxes

Cabinets and boxes with volume greater than 0.0164 cubic meters shall be in accordance with UL 50, hot-dip, zinc-coated, if sheet steel.

2.13.2 Circuit Breaker Enclosures

UL 489.

2.14 FIXTURES, LIGHTING AND FIXTURE ACCESSORIES/COMPONENTS

Standard Drawing 40-06-04 sheets referenced hereinafter and enclosed as an integral part of these specifications, modifications and additional fixtures shown on contract drawings. Fixtures, accessories and components, including ballasts, lampholders, lamps, starters and starter holders, shall conform to industry standards specified below.

2.14.1 Fixture, Auxiliary or Emergency

UL 924.

2.14.2 NOT USED

2.14.3 Fluorescent

a. Fixture: NEMA LE 4 for ceiling compatibility of recessed fixtures and UL 1570. Fixtures shall be plainly marked for proper lamp and ballast type to identify lamp diameter, wattage, color and start type. Marking shall be readily visible to service personnel, but not visible from normal viewing angles.

(1) Electronic Ballast. Electronic ballasts shall consist of a rectifier, high frequency inverter, and power control and regulation circuitry. The ballasts shall be UL listed, Class P, with a Class A sound rating and shall contain no PCBs. Ballasts shall meet 47 CFR 18 for electromagnetic interference and shall not interfere with the operation of other electrical equipment. Design shall withstand line transients per IEEE C62.41, Category A. Unless otherwise indicated, the minimum number of ballasts shall be used to serve each individual fixture, using one, two, three or four lamp ballasts. A single ballast may be used to serve multiple fixtures if they are continuous mounted, factory manufactured for

that installation with an integral wireway, and are identically controlled.

(a) Light output regulation shall be +/- 10%.

(b) Voltage input regulation shall be +/- 10%.

(c) Lamp current crest factor shall be no more than 1.6.

(d) Ballast factor shall be not less than 85% nor more than 100%, unless otherwise indicated.

(e) A 60 Hz filter shall be provided. Flicker shall be no more than 10% with any lamp suitable for the ballast.

(f) Ballast case temperature shall not exceed 25 degree Celsius rise above 40 degree Celsius ambient, when tested in accordance with UL 935.

(g) Total harmonic distortion shall be in the range of 10-20%.

(h) Power factor shall not be less than 0.95.

(i) Ballasts shall operate at a frequency of 20 kHz or more.

(j) Operating filament voltage shall be 2.5 to 4.5 volts.

(k) Warranty. Three year full warranty including a $10 labor allowance.

(l) Ballast Efficacy Factor (BEF) shall be in accordance with the following table. Ballasts and lamps shall be matching rapid start or instant start as indicated on the following table. If 32W-F32-T8 lamps and ballasts are used, they must be either all rapid start or all instant start.

ELECTRONIC FLUORESCENT BALLAST EFFICACY FACTORS*

LAMP TYPE	TYPE OF STARTER & LAMP	NOMINAL OPERATIONAL INPUT VOLTAGE	NUMBER OF LAMPS	MIN. BALLAST EFFICACY FACTOR
32W F32 T8	rapid or instant start	120 or 277 V	1	2.4
			2	1.4
			3	1.0
			4	0.8

*For ballasts not specifically designed for use with dimming controls

The BEF is calculated using the formula:

BEF = Ballast Factor (in percent) / Power Input

Where Power Input = Total Wattage of Combined Lamps and Ballasts.

c. Lampholders, Starters, and Starter Holders: UL 542.

2.14.4 High-Intensity-Discharge

a. Fixture: NEMA LE 4 for ceiling compatibility of recessed fixtures and UL 1572.

b. Ballasts: ANSI C82.4 for multiple supply types and UL 1029. Ballasts shall be labeled "Non-PCB".

2.15 LOW-VOLTAGE FUSES AND FUSEHOLDERS

2.15.1 Fuses, Low Voltage Cartridge Type

NEMA FU 1.

2.15.2 NOT USED

2.15.3 Fuses, Class K, High-Interrupting-Capacity Type

UL 198D.

2.15.4 NOT USED

2.15.5 Fuses, Class R

UL 198E.

2.15.6 NOT USED

2.15.7 Fuses for Supplementary Overcurrent Protection

UL 198G.

2.15.8 NOT USED

2.15.9 Fuseholders

UL 512.

2.16 INSTRUMENTS, ELECTRICAL INDICATING

ANSI C39.1.

2.17 MOTORS, AC, FRACTIONAL AND INTEGRAL

Motors, ac, fractional and integral kilowatt, 373.0 kW and smaller shall conform to NEMA MG 1 and UL 1004for motors; NEMA MG 10 for energy management selection of polyphase motors.

2.17.1 Rating

The kilowatt rating of motors should be limited to no more than 125 percent of the maximum load being served unless a NEMA standard size does not fall within this range. In this case, the next larger NEMA standard motor size should be used.

2.17.2 Motor Efficiencies

All permanently wired polyphase motors of 746 W or more shall meet the minimum full-load efficiencies as indicated in the following table, and as specified in this specification. Motors of 746 W or more with open, drip

proof or totally enclosed fan cooled enclosures shall be high efficiency type, unless otherwise indicated. Motors provided as an integral part of motor driven equipment are excluded from this requirement if a minimum seasonal or overall efficiency requirement is indicated for that equipment by the provisions of another section.

Minimum Motor Efficiencies

kW	Std. Efficiency	High Efficiency
0.746	77.0	85.5
1.12	78.5	85.5
1.49	78.5	85.5
2.24	78.5	88.5
3.73	82.5	88.5
5.60	84.0	90.0
7.46	85.5	90.0
11.2	85.5	91.0
14.9	87.5	92.0
18.7	88.5	92.0
22.4	88.5	92.0
29.8	88.5	92.0
37.3	89.0	92.5
44.8	89.0	92.5
56.9	89.0	95.5
74.6	90.0	93.5
93.3	91.0	94.5
112	91.0	94.5
149	91.0	94.5
187	91.0	94.5
224	91.0	94.5
261	91.0	94.5
298	91.0	94.5
373	91.0	94.5

2.18 MOTOR CONTROLS AND MOTOR CONTROL CENTERS

2.18.1 General

NEMA ICS 1, NEMA ICS 2, NEMA ICS 3 and NEMA ICS 6, and UL 508 and UL 845. Panelboards supplying non-linear loads shall have neutrals sized for 200 percent of rated current.

2.18.2 Motor Starters

Combination starters shall be provided with circuit breakers, or fusible switches, as indicated.

2.18.3 Thermal-Overload Protection

Each motor of 93 W (1/8 hp) or larger shall be provided with thermal-overload protection. Polyphase motors shall have overload protection in each ungrounded conductor. The overload-protection device shall be provided either integral with the motor or controller, or shall be mounted in a separate enclosure. Unless otherwise specified, the protective device shall be of the manually reset type. Single or double pole tumbler switches specifically designed for alternating-current operation only may be used as manual controllers for single-phase motors

having a current rating not in excess of 80 percent of the switch rating.

2.18.4 Low-Voltage Motor Overload Relays

2.18.4.1 General

Thermal overload relays shall conform to NEMA ICS 2 and UL 508. Overload protection shall be provided either integral with the motor or motor controller, and shall be rated in accordance with the requirements of NFPA 70. Standard units shall be used for motor starting times up to 7 seconds. Quick trip units shall be used on hermetically sealed, submersible pumps, and similar motors.

2.18.4.2 Construction

Manual reset type thermal relay shall be melting alloy construction.

2.18.4.3 Ratings

Voltage ratings shall be not less than the applicable circuit voltage. Trip current ratings shall be established by selection of the replaceable overload device and shall not be adjustable. Where the controller is remotely-located or difficult to reach, an automatic reset, non-compensated overload relay shall be provided. Manual reset overload relays shall be provided otherwise, and at all locations where automatic starting is provided. Where the motor is located in a constant ambient temperature, and the thermal device is located in an ambient temperature that regularly varies by more than minus 10 degrees C, an ambient temperature-compensated overload relay shall be provided.

2.18.5 Automatic Control Devices

2.18.5.1 Direct Control

Automatic control devices (such as thermostats, float or pressure switches) which control the starting and stopping of motors directly shall be designed for that purpose and have an adequate kilowatt rating.

2.18.5.2 Pilot-Relay Control

Where the automatic-control device does not have such a rating, a magnetic starter shall be used, with the automatic-control device actuating the pilot-control circuit.

2.18.5.3 Manual/Automatic Selection

a. Where combination manual and automatic control is specified and the automatic-control device actuates the pilot control circuit of a magnetic starter, the magnetic starter shall be provided with a three-position selector switch marked MANUAL-OFF-AUTOMATIC.

b. Connections to the selector switch shall be such that; only the normal automatic regulatory control devices will be bypassed when the switch is in the Manual position; all safety control devices, such as low-or high-pressure cutouts, high-temperature cutouts, and motor-overload protective devices, shall be connected in the motor-control circuit in both the Manual and the Automatic positions of the selector switch. Control circuit connections to any MANUAL-OFF-AUTOMATIC switch or to more than one automatic

regulatory control device shall be made in accordance with wiring diagram approved by the Contracting Officer unless such diagram is included on the drawings. All controls shall be 120 volts or less unless otherwise indicated.

2.19 PANELBOARDS

Dead-front construction, NEMA PB 1 and UL 67.

2.20 RECEPTACLES

2.20.1 NOT USED

2.20.2 Heavy Duty Grade

NEMA WD 1. Devices shall conform to all requirements for heavy duty receptacles.

2.20.3 NOT USED

2.20.4 Ground Fault Interrupters

UL 943, Class A or B.

2.20.5 NOT USED

2.20.6 NEMA Standard Receptacle Configurations

NEMA WD 6.

a. Single and Duplex, 15-Ampere and 20-Ampere, 125 Volt

15-ampere, non-locking: NEMA type 5-15R, locking: NEMA type L5-15R,
20-ampere, non-locking: NEMA type 5-20R, locking: NEMA type L5-20R.

b. Single, 30-Ampere, 125 Volt Locking: NEMA Type L5-30R.

b. Single, 30-Ampere, 250 Volt Locking: NEMA Type L6-30R.

2.21 Service Entrance Equipment

UL 869A.

2.22 SPLICE, CONDUCTOR

UL 486C.

2.23 NOT USED

2.24 SNAP SWITCHES

UL 20.

2.25 TAPES

2.25.1 Plastic Tape

UL 510.

2.25.2 Rubber Tape

UL 510.

2.26 NOT USED

2.27 NOT USED

2.28 NOT USED

2.29 NOT USED

2.30 NOT USED

2.31 WIRING DEVICES

NEMA WD 1 for wiring devices, and NEMA WD 6 for dimensional requirements of wiring devices.

2.32 PUBLIC ADDRESS SPEAKERS

Flush-Mounted cone type speakers shall be provided in areas with a finished ceiling. Industrial horn type speakers shall be provided in work bay areas.

2.32.1 Cone Speakers

SPECIFICATIONS:

8" Cone Speaker with Whizzer for Extended High Frequency Response

Type.....8" dual cone
Frequency range.....30 Hz to 18 kHz
Power Rating.....10 Watts
Sensitivity.....-94dB (1 Watt @ 1 Meter)
Voice Coil Impedance.....8 Ohms
Voice Coil Diameter.....0.75"
Magnet.....4.8 Oz.
Listing.....UL 1480

70 V Transformer

Type.....70.7 V line
Power Rating.....4 Watts
Primary Voltage.....70.7 V
Primary Taps.....0.25, 0.5, 1, 2, 4 W
Secondary Impedance.....8 Ohms

Backboxes shall be provided with mounting rails for acoustical tile ceiling and have an acoustical coating to prevent resonance.

Baffles shall be round steel with a white enamel finish.

2.32.2 Horn Speakers

SPECIFICATIONS:

Horn Speaker

Type.....Industrial loudspeaker with

14" x 6" Cobra-flair bell
Frequency range.....250 Hz to 14 kHz
Power Rating.....30 Watts
Sensitivity.....123dB (30 Watts @ 4 feet)
Voice Coil Impedance.....8 Ohms
Dispersion Angle.....120 deg. x 60 deg.
Listing.....UL 1480

70 V Transformer

Type.....70.7 V line
Power Rating.....30 Watts
Primary Voltage.....70.7 V
Primary Taps.....1.8, 3.7, 7.5, 15, 30 Watts
Secondary Impedance.....8 Ohms

Wiring terminals shall be enclosed and speaker shall be waterproof. Provide with universal mounting bracket.

2.33 COORDINATED POWER SYSTEM PROTECTION

Analyses shall be prepared to demonstrate that the equipment and system constructed meet the specified requirements for equipment ratings, coordination, and protection. They shall include a load flow analysis, a fault current analysis, and protective device coordination study. The studies shall be performed by a registered professional engineer with demonstrated experience in power system coordination in the last three years. The Contractor shall provide a list of references complete with points of contact, addresses and telephone numbers. The selection of the engineer is subject to the approval of the Contracting Officer.

2.33.1 Scope of Analyses

The fault current analysis, and protective device coordination study shall begin at: the source bus and extend down to system buses where fault availability is 10,000 amperes (symmetrical) for building/facility 600 volt level distribution buses.

2.33.2 Determination of Facts

The time-current characteristics, features, and nameplate data for each existing protective device shall be determined and documented. The Contractor shall coordinate with the Contracting Officer for fault current availability at the site.

2.33.3 Single Line Diagram

A single line diagram shall be prepared to show the electrical system buses, devices, transformation points, and all sources of fault current (including generator and motor contributions). A fault-impedance diagram or a computer analysis diagram may be provided. Each bus, device or transformation point shall have a unique identifier. If a fault-impedance diagram is provide, impedance data shall be shown. Locations of switches, breakers, and circuit interrupting devices shall be shown on the diagram together with available fault data, and the device interrupting rating.

2.33.4 Fault Current Analysis

2.33.4.1 Method

The fault current analysis shall be performed in accordance with methods described in IEEE Std 242, and IEEE Std 399.

2.33.4.2 Data

Actual data shall be utilized in fault calculations. Bus characteristics and transformer impedances shall be those proposed. Data shall be documented in the report.

2.33.4.3 Fault Current Availability

Balanced three-phase fault, bolted line-to-line fault, and line-to-ground fault current values shall be provided at each voltage transformation point and at each power distribution bus. The maximum and minimum values of fault available at each location shall be shown in tabular form on the diagram or in the report.

2.33.5 Coordination Study

The study shall demonstrate that the maximum possible degree of selectivity has been obtained between devices specified, consistent with protection of equipment and conductors from damage from overloads and fault conditions. The study shall include a description of the coordination of the protective devices in this project. Provide a written narrative that describes: which devices may operate in the event of a fault at each bus; the logic used to arrive at device ratings and settings; situation where system coordination is not achievable due to device limitations (an analysis of any device curves which order overlap); coordination between upstream and downstream devices. Composite coordination plots shall be provided on log-log graph paper.

2.33.6 Study Report

a. The report shall include a narrative: the analyses performed; the bases and methods used; and the desired method of coordinated protection of the power system.

b. The study shall include descriptive and technical data for existing devices and new protective devices proposed. The data shall include manufacturers published data, nameplate data, and definition of the fixed or adjustable features of the existing or new protective devices.

c. The report shall document utility company data and protective device ratings and settings.

d. The report shall contain fully coordinated composite time-current characteristic curves for each bus in the system, as required to ensure coordinated power system protection between protective devices or equipment. The report shall include recommended ratings and settings of all protective devices in tabulated form.

e. The report shall provide the calculations performed for the analyses, including computer analysis programs utilized. The name of the software package, developer, and version number shall be provided.

PART 3 EXECUTION

3.1 GROUNDING

Grounding shall be in conformance with NFPA 70, the contract drawings, and the following specifications.

3.1.1 Ground Rods

The resistance to ground shall be measured using the fall-of-potential method described in IEEE Std 81. The maximum resistance of a driven ground shall not exceed 25 ohms under normally dry conditions. If this resistance cannot be obtained with a single rod, 2 additional rods not less than 1.8 meters on centers, or if sectional type rods are used, 2 additional sections may be coupled and driven with the first rod. In high-ground-resistance, UL listed chemically charged ground rods may be used. If the resultant resistance exceeds 25 ohms measured not less than 48 hours after rainfall, the Contracting Officer shall be notified immediately. Connections below grade shall be fusion welded. Connections above grade shall be fusion welded or shall use UL 467 approved connectors.

3.1.2 NOT USED

3.1.3 Grounding Conductors

A green equipment grounding conductor, sized in accordance with NFPA 70 shall be provided, regardless of the type of conduit. Equipment grounding bars shall be provided in all panelboards. The equipment grounding conductor shall be carried back to the service entrance grounding connection or separately derived grounding connection. All equipment grounding conductors, shall be bonded or joined together in each wiring box or equipment enclosure. Metallic raceways and grounding conductors shall be checked to assure that they are wired or bonded into a common junction. Metallic boxes and enclosures, if used, shall also be bonded to these grounding conductors by an approved means per NFPA 70.

3.2 WIRING METHODS

Wiring shall conform to NFPA 70, the contract drawings, and the following specifications. Unless otherwise indicated, wiring shall consist of insulated conductors installed in rigid zinc-coated steel conduit or electrical metallic tubing. Where cables and wires are installed in cable trays, they shall be of the type permitted by NFPA 70 for use in such applications. Wire fill in conduits shall be based on NFPA 70 for the type of conduit and wire insulations specified. Wire fill in conduits located in Class I or II hazardous areas shall be limited to 25 percent of the cross sectional area of the conduit.

3.2.1 Conduit and Tubing Systems

Conduit and tubing systems shall be installed as indicated. Conduit sizes shown are based on use of copper conductors with insulation types as described in paragraph WIRING METHODS. Minimum size of raceways shall be 15 mm. Only metal conduits will be permitted when conduits are required for shielding or other special purposes indicated, or when required by conformance to NFPA 70. Nonmetallic tubing may be used in damp, wet or corrosive locations when permitted by NFPA 70 and the conduit or tubing system is provided with appropriate boxes, covers, clamps, screws or other appropriate type of fittings. Electrical metallic tubing (EMT) may be installed only within buildings. EMT may be installed in concrete and

grout in dry locations. EMT installed in concrete or grout shall be provided with concrete tight fittings. EMT shall not be installed in damp or wet locations, or the air space of exterior masonry cavity walls. Bushings, manufactured fittings or boxes providing equivalent means of protection shall be installed on the ends of all conduits and shall be of the insulating type, where required by NFPA 70. Only UL listed adapters shall be used to connect EMT to rigid metal conduit, cast boxes, and conduit bodies. Penetrations of above grade floor slabs, time-rated partitions and fire walls shall be firestopped in accordance with Section 07270 FIRESTOPPING. Except as otherwise specified, IMC may be used as an option for rigid steel conduit in areas as permitted by NFPA 70. Raceways shall not be installed under the firepits of boilers and furnaces and shall be kept 150 mm away from parallel runs of flues, steam pipes and hot-water pipes. Raceways shall be concealed within finished walls, ceilings, and floors unless otherwise shown. Raceways crossing structural expansion joints or seismic joints shall be provided with suitable expansion fittings or other suitable means to compensate for the building expansion and contraction and to provide for continuity of grounding. Wiring installed in underfloor raceway system shall be suitable for installation in wet locations.

3.2.1.1 Pull Wires

A pull wire shall be inserted in each empty raceway in which wiring is to be installed if the raceway is more than 15 meters in length and contains more than the equivalent of two 90-degree bends, or where the raceway is more than 45 meters in length. The pull wire shall be of No. 14 AWG zinc-coated steel, or of plastic having not less than 1.4 MPa (200 psi) tensile strength. Not less than 254 mm of slack shall be left at each end of the pull wire.

3.2.1.2 Conduit Stub-Ups

Where conduits are to be stubbed up through concrete floors, a short elbow shall be installed below grade to transition from the horizontal run of conduit to a vertical run. A conduit coupling fitting, threaded on the inside shall be installed, to allow terminating the conduit flush with the finished floor. Wiring shall be extended in rigid threaded conduit to equipment, except that where required, flexible conduit may be used 150 mm above the floor. Empty or spare conduit stub-ups shall be plugged flush with the finished floor with a threaded, recessed plug.

3.2.1.3 Below Slab-on-Grade or in the Ground

Electrical wiring below slab-on-grade shall be protected by a conduit system. Conduit passing vertically through slabs-on-grade shall be rigid steel or IMC. Rigid steel or IMC conduits installed below slab-on-grade or in the earth shall be field wrapped with 0.254 mm thick pipe-wrapping plastic tape applied with a 50 percent overlay, or shall have a factory-applied polyvinyl chloride, plastic resin, or epoxy coating system.

3.2.1.4 Installing in Slabs Including Slabs on Grade

Conduit installed in slabs-on-grade shall be rigid steel or IMC. Conduits shall be installed as close to the middle of concrete slabs as practicable without disturbing the reinforcement. Outside diameter shall not exceed 1/3 of the slab thickness and conduits shall be spaced not closer than 3 diameters on centers except at cabinet locations where the slab thickness shall be increased as approved by the Contracting Officer. Where conduit

is run parallel to reinforcing steel, the conduit shall be spaced a minimum of one conduit diameter away but not less than 25.4 mm from the reinforcing steel.

3.2.1.5 Changes in Direction of Runs

Changes in direction of runs shall be made with symmetrical bends or cast-metal fittings. Field-made bends and offsets shall be made with an approved hickey or conduit-bending machine. Crushed or deformed raceways shall not be installed. Trapped raceways in damp and wet locations shall be avoided where possible. Care shall be taken to prevent the lodgment of plaster, dirt, or trash in raceways, boxes, fittings and equipment during the course of construction. Clogged raceways shall be cleared of obstructions or shall be replaced.

3.2.1.6 Supports

Except where otherwise permitted by NFPA 70, conduits and tubing shall be securely and rigidly fastened in place at intervals of not more than 3 meters and within 900 mm of boxes, cabinets, and fittings, with approved pipe straps, wall brackets, conduit clamps, conduit hangers, threaded C-clamps, beam clamps, or ceiling trapeze. Loads and supports shall be coordinated with supporting structure to prevent damage or deformation to the structure. Loads shall not be applied to joist bridging. Attachment shall be by wood screws or screw-type nails to wood; by toggle bolts on hollow masonry units; by expansion bolts on concrete or brick; by machine screws, welded threaded studs, heat-treated or spring-steel-tension clamps on steel work. Nail-type nylon anchors or threaded studs driven in by a powder charge and provided with lock washers and nuts may be used in lieu of expansion bolts or machine screws. Raceways or pipe straps shall not be welded to steel structures. Cutting the main reinforcing bars in reinforced concrete beams or joists shall be avoided when drilling holes for support anchors. Holes drilled for support anchors, but not used, shall be filled. In partitions of light steel construction, sheet-metal screws may be used. Raceways shall not be supported using wire or nylon ties. Raceways shall be independently supported from the structure. Upper raceways shall not be used as a means of support for lower raceways. Supporting means will not be shared between electrical raceways and mechanical piping or ducts. Cables and raceways shall not be supported by ceiling grids. Except where permitted by NFPA 70, wiring shall not be supported by ceiling support systems. Conduits shall be fastened to sheet-metal boxes and cabinets with two locknuts where required by NFPA 70, where insulating bushings are used, and where bushings cannot be brought into firm contact with the box; otherwise, a single locknut and bushing may be used. Threadless fittings for electrical metallic tubing shall be of a type approved for the conditions encountered. Additional support for horizontal runs is not required when EMT rests on steel stud cutouts.

3.2.1.7 Exposed Raceways

Exposed raceways shall be installed parallel or perpendicular to walls, structural members, or intersections of vertical planes and ceilings. Raceways under raised floors and above accessible ceilings shall be considered as exposed installations in accordance with NFPA 70definitions.

3.2.1.8 NOT USED

3.2.1.9 NOT USED

3.2.1.10 Communications Raceways

Communications raceways indicated shall be installed in accordance with the previous requirements for conduit and tubing and with the additional requirements that no length of run shall exceed 15 meters for 20 mm sizes, and 30 meters for 25 mm or larger sizes, and shall not contain more than two 90-degrees bends or the equivalent. Additional pull or junction boxes shall be installed to comply with these limitations whether or not indicated. Inside radii of bends in conduits of 25 mm (1 inch) size or larger shall not be less than ten times the nominal diameter.

3.2.2 NOT USED

3.2.3 Cable Trays

Cable trays shall be supported in accordance with the recommendations of the manufacturer but at no more than 1.8 meter intervals. Contact surfaces of aluminum connections shall be coated with an antioxidant compound prior to assembly. Adjacent cable tray sections shall be bonded together by connector plates of an identical type as the cable tray sections. The Contractor shall submit the manufacturer's certification that the cable tray system meets all requirements of Article 318 of NFPA 70. The cable tray shall be installed and grounded in accordance with the provisions of Article 318 of NFPA 70. Data submitted by the Contractor shall demonstrate that the completed cable tray systems will comply with the specified requirements. Cable trays shall terminate 250 mm from both sides of smoke and fire partitions. Conductors run through smoke and fire partitions shall be installed in 103 mm (4 inch) rigid steel conduits with grounding bushings, extending 300 mm beyond each side of the partitions. The installation shall be sealed to preserve the smoke and fire rating of the partitions. Penetrations shall be firestopped in accordance with Section 07270 FIRESTOPPING.

3.2.4 Cables and Conductors

Installation shall conform to the requirements of NFPA 70. Covered, bare or insulated conductors of circuits rated over 600 volts shall not occupy the same equipment wiring enclosure, cable, or raceway with conductors of circuits rated 600 volts or less.

3.2.4.1 Sizing

Unless otherwise noted, all sizes are based on copper conductors and the insulation types indicated. Sizes shall be not less than indicated. Branch-circuit conductors shall be not smaller than No. 12 AWG. Conductors for branch circuits of 120 volts more than 30 meters long from panel to load center, shall be no smaller than No. 10 AWG. Class 1 remote control and signal circuit conductors shall be not less than No. 14 AWG. Class 2 remote control and signal circuit conductors shall be not less than No. 16 AWG. Class 3 low-energy, remote-control and signal circuits shall be not less than No. 22 AWG.

3.2.4.2 NOT USED

3.2.4.3 NOT USED

3.2.4.4 NOT USED

3.2.4.5 Cable Splicing

Splices shall be made in an accessible location. Crimping tools and dies shall be approved by the connector manufacturer for use with the type of connector and conductor.

a. Copper Conductors, 600 Volt and Under: Splices in conductors No. 10 AWG and smaller diameter shall be made with an insulated, pressure-type connector. Splices in conductors No. 8 AWG and larger diameter shall be made with a solderless connector and insulated with tape or heat-shrink type insulating material equivalent to the conductor insulation.

3.2.4.6 Conductor Identification and Tagging

Power, control, and signal circuit conductor identification shall be provided within each enclosure where a tap, splice, or termination is made. Where several feeders pass through a common pull box, the feeders shall be tagged to indicate clearly the electrical characteristics, circuit number, and panel designation. Phase conductors of low voltage power circuits shall be identified by color coding. Phase identification by a particular color shall be maintained continuously for the length of a circuit, including junctions.

a. Color coding shall be provided for service, feeder, branch, and ground conductors. Color shall be green for grounding conductors and white for neutrals; except where neutrals of more than one system are installed in the same raceway or box, other neutral shall be white with colored (not green) stripe. The color coding for three-phase and single-phase low voltage systems shall be as follows:

277/480-volt, 3-phase: Brown(A), orange(B), violet or yellow(C).
120/208-volt, 3-phase: Black(A), red(B), and blue(C).
120/240-volt, 1-phase: Black and red.

b. Conductor phase and voltage identification shall be made by color-coded insulation for all conductors smaller than No. 6 AWG. For conductors No. 6 AWG and larger, identification shall be made by color-coded insulation, or conductors with black insulation may be furnished and identified by the use of half-lapped bands of colored electrical tape wrapped around the insulation for a minimum of 75 mm of length near the end, or other method as submitted by the Contractor and approved by the Contracting Officer.

c. Control and signal circuit conductor identification shall be made by color-coded insulated conductors, plastic-coated self-sticking printed markers, permanently attached stamped metal foil markers, or equivalent means as approved. Control circuit terminals of equipment shall be properly identified. Terminal and conductor identification shall match that shown on approved detail drawings. Hand lettering or marking is not acceptable.

3.3 BOXES AND SUPPORTS

Boxes shall be provided in the wiring or raceway systems where required by NFPA 70 for pulling of wires, making connections, and mounting of devices or fixtures. Pull boxes shall be furnished with screw-fastened covers. Indicated elevations are approximate, except where minimum mounting heights for hazardous areas are required by NFPA 70. Unless otherwise indicated,

boxes for wall switches shall be mounted 1.2 meters above finished floors. Switch and outlet boxes located on opposite sides of fire rated walls shall be separated by a minimum horizontal distance of 600 mm. The total combined area of all box openings in fire rated walls shall not exceed 0.0645 square meters per 9.3 square meters. Maximum box areas for individual boxes in fire rated walls vary with the manufacturer and must not exceed the maximum specified for that box in UL-03. Only boxes listed in UL-03 shall be used in fire rated walls.

3.3.1 Box Applications

Each box shall have not less than the volume required by NFPA 70 for number of conductors enclosed in box. Boxes for metallic raceways, 102 by 102 mm nominal size and smaller, shall be of the cast-metal hub type when located in normally wet locations, when flush and surface mounted on outside of exterior surfaces, or when located in hazardous areas. Cast-metal boxes installed in wet locations and boxes installed flush with the outside of exterior surfaces shall be gasketed. Boxes for mounting lighting fixtures shall be not less than 102 mm square, or octagonal, except smaller boxes may be installed as required by fixture configuration, as approved. Cast-metal boxes with 2.4 mm wall thickness are acceptable. Large size boxes shall be NEMA 1 or as shown. Boxes in other locations shall be sheet steel except that aluminum boxes may be used with aluminum conduit, and nonmetallic boxes may be used with nonmetallic conduit and tubing or nonmetallic sheathed cable system, when permitted by NFPA 70. Boxes for use in masonry-block or tile walls shall be square-cornered, tile-type, or standard boxes having square-cornered, tile-type covers.

3.3.2 Brackets and Fasteners

Boxes and supports shall be fastened to wood with wood screws or screw-type nails of equal holding strength, with bolts and metal expansion shields on concrete or brick, with toggle bolts on hollow masonry units, and with machine screw or welded studs on steel work. Threaded studs driven in by powder charge and provided with lockwashers and nuts, or nail-type nylon anchors may be used in lieu of expansion shields, or machine screws. Penetration of more than 38.1 mm (1-1/2 inches) into reinforced-concrete beams or more than 19.1 mm (3/4 inch) into reinforced-concrete joists shall avoid cutting any main reinforcing steel. The use of brackets which depend on gypsum wallboard or plasterboard for primary support will not be permitted. In partitions of light steel construction, bar hangers with 25 mm long studs, mounted between metal wall studs or metal box mounting brackets shall be used to secure boxes to the building structure. When metal box mounting brackets are used, additional box support shall be provided on the side of the box opposite the brackets. This additional box support shall consist of a minimum 300 mm long section of wall stud, bracketed to the opposite side of the box and secured by two screws through the wallboard on each side of the stud. Metal screws may be used in lieu of the metal box mounting brackets.

3.3.3 Mounting in Walls, Ceilings, or Recessed Locations

In walls or ceilings of concrete, tile, or other non-combustible material, boxes shall be installed so that the edge of the box is not recessed more than 6 mm from the finished surface. Boxes mounted in combustible walls or ceiling material shall be mounted flush with the finished surface. The use of gypsum or plasterboard as a means of supporting boxes will not be permitted. Boxes installed for concealed wiring shall be provided with suitable extension rings or plaster covers, as required. The bottom of

boxes installed in masonry-block walls for concealed wiring shall be mounted flush with the top of a block to minimize cutting of the blocks, and boxes shall be located horizontally to avoid cutting webs of block. Separate boxes shall be provided for flush or recessed fixtures when required by the fixture terminal operating temperature, and fixtures shall be readily removable for access to the boxes unless ceiling access panels are provided.

3.3.4 Installation in Overhead Spaces

In open overhead spaces, cast-metal boxes threaded to raceways need not be separately supported except where used for fixture support; cast-metal boxes having threadless connectors and sheet metal boxes shall be supported directly from the building structure or by bar hangers. Hangers shall not be fastened to or supported from joist bridging. Where bar hangers are used, the bar shall be attached to raceways on opposite sides of the box and the raceway shall be supported with an approved type fastener not more than 600 mm from the box.

3.4 DEVICE PLATES

One-piece type device plates shall be provided for all outlets and fittings. Plates on unfinished walls and on fittings shall be of zinc-coated sheet steel, cast-metal, or impact resistant plastic having rounded or beveled edges. Plates on finished walls shall be of steel with baked enamel finish or impact-resistant plastic and shall be ivory. Screws shall be of metal with countersunk heads, in a color to match the finish of the plate. Plates shall be installed with all four edges in continuous contact with finished wall surfaces without the use of mats or similar devices. Plaster fillings will not be permitted. Plates shall be installed with an alignment tolerance of 1.6 mm. The use of sectional-type device plates will not be permitted. Plates installed in wet locations shall be gasketed and provided with a hinged, gasketed cover, unless otherwise specified.

3.5 RECEPTACLES

3.5.1 Single and Duplex, 15 or 20-ampere, 125 volt

Single and duplex receptacles shall be rated 15 amperes, 125 volts, two-pole, three-wire, grounding type with polarized parallel slots. Bodies shall be of ivory to match color of switch handles in the same room or to harmonize with the color of the respective wall, and supported by mounting strap having plaster ears. Contact arrangement shall be such that contact is made on two sides of an inserted blade. Receptacle shall be side- or back-wired with two screws per terminal. The third grounding pole shall be connected to the metal mounting yoke. Receptacles with ground fault circuit interrupters shall have the current rating as indicated, and shall be UL Class A type unless otherwise shown. Ground fault circuit protection shall be provided as required by NFPA 70 and as indicated on the drawings.

3.5.2 NOT USED

3.5.3 NOT USED

3.5.4 Weatherproof Applications

Weatherproof receptacles shall be suitable for the environment, damp or wet as applicable, and the housings shall be labeled to identify the allowable

use. Receptacles shall be marked in accordance with UL 514A for the type of use indicated; "Damp locations", "Wet Locations", "Wet Location Only When Cover Closed". Assemblies shall be installed in accordance with the manufacturer's recommendations.

3.5.4.1 NOT USED

3.5.4.2 Wet Locations

Receptacles in wet locations shall be installed in an assembly rated for such use whether the plug is inserted or withdrawn, unless otherwise indicated. In a duplex installation, the receptacle cover shall be configured to shield the connections whether one or both receptacles are in use.

3.5.5 NOT USED

3.5.6 NOT USED

3.5.7 NOT USED

3.5.8 NOT USED

3.5.9 NOT USED

3.5.10 NOT USED

3.5.11 Special-Purpose or Heavy-Duty Receptacles

Special-purpose or heavy-duty receptacles shall be of the type and of ratings and number of poles indicated or required for the anticipated purpose. Contact surfaces may be either round or rectangular. One appropriate straight or angle-type plug shall be furnished with each receptacle. Locking type receptacles, rated 30 amperes or less, shall be locked by rotating the plug. Locking type receptacles, rated more than 50 amperes, shall utilize a locking ring.

3.6 WALL SWITCHES

Wall switches shall be of the totally enclosed tumbler type. The wall switch handle and switch plate color shall be ivory. Wiring terminals shall be of the screw type or of the solderless pressure type having suitable conductor-release arrangement. Not more than one switch shall be installed in a single-gang position. Switches shall be rated 20-ampere 120-volt for use on alternating current only. Dimming switches shall be solid-state flush mounted, sized for the loads.

3.7 SERVICE EQUIPMENT

Service-disconnecting means shall be of the type indicated with an external handle for manual operation. When service disconnecting means is a part of an assembly, the assembly shall be listed as suitable for service entrance equipment. Enclosures shall be sheet metal with hinged cover for surface mounting unless otherwise indicated.

3.8 PANELBOARDS

Circuit breakers and switches used as a motor disconnecting means shall be capable of being locked in the open position. Door locks shall be keyed

alike. Nameplates shall be as approved. Directories shall be typed to indicate loads served by each circuit and mounted in a holder behind a clear protective covering. Busses shall be copper.

3.8.1 NOT USED

3.8.2 Panelboards

Panelboards shall be circuit breaker or fusible switch equipped as indicated on the drawings.

3.9 FUSES

Equipment provided under this contract shall be provided with a complete set of properly rated fuses when the equipment manufacturer utilize fuses in the manufacture of the equipment, or if current-limiting fuses are required to be installed to limit the ampere-interrupting capacity of circuit breakers or equipment to less than the maximum available fault current at the location of the equipment to be installed. Fuses shall have a voltage rating of not less than the phase-to-phase circuit voltage, and shall have the time-current characteristics required for effective power system coordination. Time-delay and non-time-delay options shall be as shown.

3.9.1 Cartridge Fuses; Noncurrent-Limiting Type

Cartridge fuses of the noncurrent-limiting type shall be Class H, nonrenewable, dual element, time lag type and shall have interrupting capacity of 10,000 amperes. At 500 percent current, cartridge fuses shall not blow in less than 10 seconds.

3.9.2 Cartridge Fuses; Current-Limiting Type

Cartridge fuses, current-limiting type, Class RK1 or RK5 shall have tested interrupting capacity not less than 200,000 amperes. Fuse holders shall be the type that will reject all Class H fuses.

3.9.3 NOT USED

3.9.4 NOT USED

3.9.5 Motor and Transformer Circuit Fuses

Motor, motor controller, transformer, and inductive circuit fuses shall be Class RK1 or RK5, current-limiting, time-delay with 200,000 amperes interrupting capacity.

3.10 UNDERGROUND SERVICE

Unless otherwise indicated, interior conduit systems shall be stubbed out 1.5 m beyond the building wall and 600 mm below finished grade, for interface with the exterior service lateral conduits and exterior communications. Outside conduit ends shall be bushed when used for direct burial service lateral conductors. Outside conduit ends shall be capped or plugged until connected to exterior conduit systems. Underground service lateral conductors will be extended to building service entrance and terminated in accordance with the requirements of Section 16375 ELECTRICAL DISTRIBUTION SYSTEM, UNDERGROUND and NFPA 70.

3.11 NOT USED

3.12 MOTORS

Each motor shall conform to the kW and voltage ratings indicated, and shall have a service factor and other characteristics that are essential to the proper application and performance of the motors under conditions shown or specified. Three-phase motors for use on 3-phase 208-volt systems shall have a nameplate rating of 200 volts. Unless otherwise specified, all motors shall have open frames, and continuous-duty classification based on a 40 degree C ambient temperature reference. Polyphase motors shall be squirrel-cage type, having normal-starting-torque and low-starting-current characteristics, unless other characteristics are specified in other sections of these specifications or shown on contract drawings. The Contractor shall be responsible for selecting the actual kilowatt (horsepower) ratings and other motor requirements necessary for the applications indicated. When electrically driven equipment furnished under other sections of these specifications materially differs from the design, the Contractor shall make the necessary adjustments to the wiring, disconnect devices and branch-circuit protection to accommodate the equipment actually installed.

3.13 MOTOR CONTROL

Each motor or group of motors requiring a single control shall be provided under other sections of these specifications with a suitable controller and devices that will perform the functions as specified for the respective motors. Each motor of 93 W (1/8 hp) or larger shall be provided with thermal-overload protection. Polyphase motors shall have overload protection in each ungrounded conductor. The overload-protection device shall be provided either integral with the motor or controller, or shall be mounted in a separate enclosure. Unless otherwise specified, the protective device shall be of the manually reset type. Single or double pole tumbler switches specifically designed for alternating-current operation only may be used as manual controllers for single-phase motors having a current rating not in excess of 80 percent of the switch rating. Automatic control devices such as thermostats, float or pressure switches may control the starting and stopping of motors directly, provided the devices used are designed for that purpose and have an adequate kilowatt rating. When the automatic-control device does not have such a rating, a magnetic starter shall be used, with the automatic-control device actuating the pilot-control circuit. When combination manual and automatic control is specified and the automatic-control device operates the motor directly, a double-throw, three-position tumbler or rotary switch shall be provided for the manual control; when the automatic-control device actuates the pilot control circuit of a magnetic starter, the latter shall be provided with a three-position selector switch marked MANUAL-OFF-AUTOMATIC. Connections to the selector switch shall be such that only the normal automatic regulatory control devices will be bypassed when the switch is in the Manual position; all safety control devices, such as low- or high-pressure cutouts, high-temperature cutouts, and motor-overload protective devices, shall be connected in the motor-control circuit in both the Manual and the Automatic positions of the selector switch. Control circuit connections to any MANUAL-OFF-AUTOMATIC switch or to more than one automatic regulatory control device shall be made in accordance with wiring diagram approved by the Contracting Officer unless such diagram is included on the drawings. All controls shall be 120 volts or less unless otherwise indicated.

3.13.1 NOT USED

3.13.2 NOT USED

3.13.3 Contacts

Unless otherwise indicated, contacts in miscellaneous control devices such as float switches, pressure switches, and auxiliary relays shall have current and voltage ratings in accordance with NEMA ICS 2 for rating designation B300.

3.14 MOTOR-DISCONNECT MEANS

Each motor shall be provided with a disconnecting means when required by NFPA 70 even though not indicated. For single-phase motors, a single or double pole toggle switch, rated only for alternating current, will be acceptable for capacities less than 30 amperes, provided the ampere rating of the switch is at least 125 percent of the motor rating. Switches shall disconnect all ungrounded conductors.

3.15 NOT USED

3.16 LAMPS AND LIGHTING FIXTURES

Ballasted fixtures shall have ballasts which are compatible with the specific type and rating of lamps indicated and shall comply with the applicable provisions of the publications referenced.

3.16.1 Lamps

Lamps of the type, wattage, and voltage rating indicated shall be delivered to the project in the original cartons and installed in the fixtures just prior to the completion of the project.

3.16.1.1 NOT USED

3.16.1.2 Fluorescent

Fluorescent lamps for magnetic ballasts shall be as indicated and shall be of a type that will not require starter switches. Lamps shall be of the rapid-start type unless otherwise shown or approved. Fluorescent lamps for electronic ballasts shall be as indicated.

3.16.1.3 High-Intensity-Discharge

High-intensity-discharge lamps shall be the metal halide safety lamp type unless otherwise indicated, shown, or approved.

3.16.2 Fixtures

Fixtures shall be as shown and shall conform to the following specifications and shall be as detailed on the drawings. Illustrations shown on these sheets are indicative of the general type desired and are not intended to restrict selection to fixtures of any particular manufacturer. Fixtures of similar designs and equivalent energy efficiency, light distribution and brightness characteristics, and of equal finish and quality will be acceptable if approved. In suspended acoustical ceilings with fluorescent fixtures, the fluorescent emergency light fixtures shall be furnished with self-contained battery packs.

3.16.2.1 Accessories

Accessories such as straps, mounting plates, nipples, or brackets shall be provided for proper installation. Open type fluorescent fixtures with exposed lamps shall have a wire-basket type guard.

3.16.2.2 Suspended Fixtures

Suspended fixtures shall be provided with swivel hangers in order to ensure a plumb installation. Pendants, rods, or chains 1.2 meters or longer excluding fixture, shall be braced to limit swinging. Bracing shall be 3 directional, 120 degrees apart. Single unit suspended fluorescent fixtures shall have twin-stem hangers. Multiple unit or continuous-row fluorescent units shall have a tubing or stem for wiring at one point, and a tubing or rod suspension provided for each length of chassis including one at each end. Maximum distance between adjacent tubing or stems shall be 3.1 meters.
Rods shall be of not less than 4.8 mm (3/16 inch) diameter. Flexible raceway shall be installed to each fixture from an overhead junction box. Fixture to fixture wiring installation is allowed only when fixtures are installed end to end in a continuous run.

3.16.2.3 Ceiling Fixtures

Ceiling fixtures shall be coordinated with and suitable for installation in, on, or from the suspended ceiling provided under other sections of these specifications. Installation and support of fixtures shall be in accordance with the NFPA 70 and manufacturer's recommendations. Recessed fixtures shall have adjustable fittings to permit alignment with ceiling panels. Recessed fixtures installed in fire-resistive type of suspended ceiling construction shall have the same fire rating as the ceiling or shall be provided with fireproofing boxes having materials of the same fire rating as the ceiling panels, in conformance with UL-03. Surface-mounted fixtures shall be suitable for fastening to the structural support for ceiling panels.

3.16.2.4 Sockets

Sockets of industrial, strip, and other open type fluorescent fixtures shall be of the type requiring a forced movement along the longitudinal axis of the lamp for insertion and removal of the lamp.

3.16.3 Emergency Light Sets

Emergency light sets shall conform to UL 924 with the number of heads as indicated. Sets shall be permanently connected to the wiring system by conductors installed in conduit.

3.17 BATTERY CHARGERS

Battery chargers shall be installed in conformance with NFPA 70.

3.18 EQUIPMENT CONNECTIONS

All wiring not furnished and installed under other sections of the specifications for the connection of electrical equipment as indicated on the drawings shall be furnished and installed under this section of the specifications. Connections shall comply with the applicable requirements of paragraph WIRING METHODS. Flexible conduits 2 m or less in length

shall be provided to all electrical equipment subject to periodic removal, vibration, or movement and for all motors. All motors shall be provided with separate grounding conductors. Liquid-tight conduits shall be used in damp or wet locations.

3.18.1 Motors and Motor Control

Motors, motor controls, and motor control centers shall be installed in accordance with NFPA 70, the manufacturer's recommendations, and as indicated. Wiring shall be extended to motors, motor controls, and motor control centers and terminated.

3.18.2 Installation of Government-Furnished Equipment

Wiring shall be extended to the equipment and terminated.

3.19 CIRCUIT PROTECTIVE DEVICES

The Contractor shall calibrate, adjust, set and test each new adjustable circuit protective device to ensure that they will function properly prior to the initial energization of the new power system under actual operating conditions.

3.20 PAINTING AND FINISHING

Field-applied paint on exposed surfaces shall be provided under Section 09900 PAINTING, GENERAL.

3.21 REPAIR OF EXISTING WORK

The work shall be carefully laid out in advance, and where cutting, channeling, chasing, or drilling of floors, walls, partitions, ceiling, or other surfaces is necessary for the proper installation, support, or anchorage of the conduit, raceways, or other electrical work, this work shall be carefully done, and any damage to building, piping, or equipment shall be repaired by skilled mechanics of the trades involved at no additional cost to the Government.

3.22 FIELD TESTING

Field testing shall be performed in the presence of the Contracting Officer. The Contractor shall notify the Contracting Officer 7 days prior to conducting tests. The Contractor shall furnish all materials, labor, and equipment necessary to conduct field tests. The Contractor shall perform all tests and inspection recommended by the manufacturer unless specifically waived by the Contracting Officer. The Contractor shall maintain a written record of all tests which includes date, test performed, personnel involved, devices tested, serial number and name of test equipment, and test results. All field test reports will be signed and dated by the Contractor.

3.22.1 Safety

The Contractor shall provide and use safety devices such as rubber gloves, protective barriers, and danger signs to protect and warn personnel in the test vicinity. The Contractor shall replace any devices or equipment which are damaged due to improper test procedures or handling.

3.22.2 Ground-Resistance Tests

The resistance of each grounding electrode system shall be measured using the fall-of-potential method defined in IEEE Std 81. Soil resistivity in the area of the grid shall be measured concurrently with the grid measurements. Ground resistance measurements shall be made before the electrical distribution system is energized and shall be made in normally dry conditions not less than 48 hours after the last rainfall. Resistance measurements of separate grounding electrode systems shall be made before the systems are bonded together below grade. The combined resistance of separate systems may be used to meet the required resistance, but the specified number of electrodes must still be provided.

a. Single rod electrode - 25 ohms.

b. Grid electrode - 10 ohms.

3.22.3 Ground-Grid Connection Inspection

All below-grade ground-grid connections will be visually inspected by the Contracting Officer before backfilling. The Contractor shall notify the Contracting Officer 24 hours before the site is ready for inspection.

3.22.4 NOT USED

3.22.5 NOT USED

3.22.6 Motor Tests

a. Phase rotation test to ensure proper directions.

b. Insulation resistance of each winding to ground.

c. Vibration test.

3.22.7 NOT USED

3.22.8 NOT USED

3.22.9 Circuit Breaker Tests

The following field tests shall be performed on circuit breakers.

3.22.9.1 NOT USED

3.22.9.2 NOT USED

3.22.9.3 Circuit Breakers, Molded Case

a. Insulation resistance test phase-to-phase, all combinations.

b. Insulation resistance test phase-to-ground, each phase.

c. Closed breaker contact resistance test.

d. Manual operation of the breaker.

3.23 OPERATING TESTS

After the installation is completed, and at such time as the Contracting

Officer may direct, the Contractor shall conduct operating tests for approval. The equipment shall be demonstrated to operate in accordance with the specified requirements. An operating test report shall be submitted in accordance with paragraph FIELD TEST REPORTS.

3.24 NOT USED

3.25 ACCEPTANCE

Final acceptance of the facility will not be given until the Contractor has successfully completed all tests and after all defects in installation, material or operation have been corrected.

-- End of Section --

SECTION 16528

EXTERIOR LIGHTING INCLUDING SECURITY AND CCTV APPLICATIONS

PART 1 GENERAL

1.1 REFERENCES

The publications listed below form a part of this specification to the extent referenced. The publications are referred to in the text by basic designation only.

AMERICAN ASSOCIATION OF STATE HIGHWAY AND TRANSPORTATION OFFICIALS (AASHTO)

AASHTO LTS-2	(1985; Rev 1986, 1987, 1988) Standard Specifications for Structural Supports for Highway Signs, Luminaires and Traffic Signals

AMERICAN NATIONAL STANDARDS INSTITUTE (ANSI)

ANSI C2	(1999) National Electrical Safety Code
ANSI C78.1351	(1989) 250-Watt, 100-Volt S50 Single-Ended High-Pressure Sodium Lamps
ANSI C80.1	(1990) Rigid Steel Conduit - Zinc Coated
ANSI C82.4	(1992) Ballasts for High-Intensity-Discharge and Low-Pressure Sodium Lamps (Multiple-Supply Type)
ANSI C119.1	(1986) Sealed Insulated Underground Connector Systems Rated 600 Volts
ANSI C136.2	(1985) Luminaires Voltage Classification
ANSI C136.3	(1989) Luminaire Attachments - for Roadway Lighting Equipment
ANSI C136.6	(1990) Roadway Lighting Equipment - Metal Heads and Reflector Assemblies - Mechanical and Optical Interchangeability
ANSI C136.9	(1990) Roadway Lighting Equipment - Socket Support Assemblies for Metal Heads - Mechanical Interchangeability
ANSI C136.10	(1988) Locking-type Photocontrol Devices and Mating Receptacles - Physical and Electrical Interchangeability and Testing for Roadway Lighting Equipment
ANSI C136.11	(1988) Multiple Sockets for Roadway Lighting Equipment

ANSI C136.13	(1992) Metal Brackets for Wood Poles
ANSI C136.15	(1986) High-Intensity-Discharge and Low-Pressure Sodium Lamps in Luminaires - Field Identification

AMERICAN SOCIETY FOR TESTING AND MATERIALS (ASTM)

ASTM A 36	(1994a) Carbon Structural Steel
ASTM A 123	(1989a) Zinc (Hot-Dip Galvanized) Coatings on Iron and Steel Products
ASTM A 153	(1982; R 1987) Zinc Coating (Hot-Dip) on Iron and Steel Hardware
ASTM B 2	(1988) Medium-Hard-Drawn Copper Wire
ASTM B 8	(1993) Concentric-Lay-Stranded Copper Conductors, Hard, Medium-Hard, or Soft
ASTM B 117	(1994) Operating Salt Spray (Fog) Testing Apparatus
ASTM D 1654	(1992) Evaluation of Painted or Coated Specimens Subjected to Corrosive Environments

ILLUMINATING ENGINEERING SOCIETY OF NORTH AMERICA (IESNA)

IESNA ARP-8	(1983) Roadway Lighting

INSTITUTE OF ELECTRICAL AND ELECTRONICS ENGINEERS (IEEE)

IEEE Std 81	(1983) Guide for Measuring Earth Resistivity, Ground Impedance, and Earth Surface Potentials of a Ground System

NATIONAL ELECTRICAL MANUFACTURERS ASSOCIATION (NEMA)

NEMA OS 1	(1989) Sheet-Steel Outlet Boxes, Device Boxes, Covers, and Box Supports
NEMA RN 1	(1989) Polyvinyl-Chloride (PVC) Externally Coated Galvanized Rigid Steel Conduit and Intermediate Metal Conduit

NATIONAL FIRE PROTECTION ASSOCIATION (NFPA)

NFPA 70	(1999) National Electrical Code

UNDERWRITERS LABORATORIES (UL)

UL 6	(1993) Rigid Metal Conduit
UL 44	(1991; Rev thru Jan 1995) Rubber-Insulated Wires and Cables

UL 98	(1994; Rev Feb 1995) Enclosed and Dead-Front Switches
UL 467	(1993) Grounding and Bonding Equipment
UL 486A	(1991; Rev Oct 1991) Wire Connectors and Soldering Lugs for Use with Copper Conductors
UL 486B	(1991; Rev thru Apr 1992) Wire Connections for Use with Aluminum Conductors
UL 514A	(1991) Metallic Outlet Boxes
UL 514B	(1992; Rev thru Apr 1995) Fittings for Conduit and Outlet Boxes
UL 651	(1989; Rev thru Dec 1989) Schedule 40 and 80 Rigid PVC Conduit
UL 854	(1991; Rev thru Apr 1993) Service-Entrance Cables
UL 1572	(1991; Rev thru Jul 1994) High Intensity Discharge Lighting Fixtures

1.2 SYSTEM DESCRIPTION

1.2.1 Lighting System

The lighting system shall be configured as specified and shown. The system shall include all fixtures, hardware, poles, cables, connectors, adapters and appurtenances needed to provide a fully functional lighting system.

1.2.2 NOT USED

1.2.3 Electrical Requirements

The equipment shall operate from a voltage source as shown, plus or minus 10 percent, and 60 Hz, plus or minus 2 percent.

1.2.4 NOT USED

1.2.5 NOT USED

1.2.6 Interface Between Lighting System and Power Distribution

Conductors shall be as indicated.

1.2.7 Nameplates

Each major component of equipment shall have a nonferrous metal or engraved plastic nameplate which shall show, as a minimum, the manufacturer's name and address, the catalog or style number, the electrical rating in volts, and the capacity in amperes or watts.

1.2.8 Standard Products

Materials and equipment shall be standard products of manufacturer

regularly engaged in the manufacture of such products. Items of equipment shall essentially duplicate equipment that has been in satisfactory use at least 2 years prior to bid opening.

1.2.9 Unusual Service Conditions

Equipment and materials furnished under this section shall be suitable for the following unusual service conditions: altitude 200 m, ambient temperature -20 degrees C.

1.3 CORROSION PROTECTION

1.3.1 Aluminum Materials

Aluminum shall not be used in contact with earth or concrete. Where aluminum conductors are connected to dissimilar metal, fittings conforming to UL 486B shall be used.

1.3.2 Ferrous Metal Materials

1.3.2.1 Hardware

Ferrous metal hardware shall be hot-dip galvanized in accordance with ASTM A 153 and ASTM A 123.

1.3.2.2 Equipment

Equipment and component items, including but not limited to metal poles and ferrous metal luminaires not hot-dip galvanized or porcelain enamel finished, shall be provided with corrosion-resistant finishes which shall withstand 480 hours of exposure to the salt spray test specified in ASTM B 117 without loss of paint or release of adhesion of the paint primer coat to the metal surface in excess of 1.6 mm (1/16 inch) from the test mark. The scribed test mark and test evaluation shall have a rating of not less than 7 in accordance with TABLE 1, (procedure A) of ASTM D 1654. Cut edges or otherwise damaged surfaces of hot-dip galvanized sheet steel or mill galvanized sheet steel shall be coated with a zinc rich paint conforming to the manufacturer's standard.

1.3.3 Finishing

Painting required for surfaces not otherwise specified and finish painting of items only primed at the factory, shall be as specified in Section 09900 PAINTING, GENERAL.

1.4 SUBMITTALS

Government approval is required for submittals with a "GA" designation; submittals having an "FIO" designation are for information only. The following shall be submitted in accordance with section 01330 SUBMITTAL PROCEDURES:

SD-01 Data

Equipment and Materials; GA.

Data published by the manufacturer of each item on the list of equipment and material, to permit verification that the item proposed is of the correct size, properly rated or applied, or is otherwise suitable for the

application and fully conforms to the requirements specified.

SD-04 Drawings

Lighting System; GA.

Detail drawings for the complete system and for poles, lighting fixtures, bracket arms, and controllers.

As-Built Drawings; FIO.

Final as-built drawings shall be finished drawings on mylar or vellum and shall be delivered with the final test report.

SD-09 Reports

Operating Test; GA.

Test procedures and reports for the Operating Test. After receipt by the Contractor of written approval of the test procedures, the Contractor shall schedule the tests. The final test procedures report shall be delivered after completion of the tests.

Ground Resistance Measurements; GA.

The measured resistance to ground of each separate grounding installation, indicating the location of the rods, the resistance of the soil in ohms per millimeter and the soil conditions at the time the measurements were made. The information shall be in writing.

SD-19 Operation and Maintenance Manuals

Lighting System; GA.

A draft copy of the operation and maintenance manuals, prior to beginning the tests for use during site testing. Final copies of the manuals as specified bound in hardback, loose-leaf binders, within 30 days after completing the field test. The draft copy used during site testing shall be updated with any changes required, prior to final delivery of the manuals. Each manual's contents shall be identified on the cover. The manual shall include names, addresses, and telephone numbers of each subcontractor installing equipment and systems, and nearest service representatives for each item of equipment for each system. The manuals shall have a table of contents and tab sheets. Tab sheets shall be placed at the beginning of each chapter or section and at the beginning of each appendix. The final copies delivered after completion of the field test shall include modifications made during installation checkout and acceptance.

PART 2 PRODUCTS

2.1 STANDARD PRODUCT

Material and equipment shall be the standard product of a manufacturer regularly engaged in the manufacture of the product and shall essentially duplicate items that have been in satisfactory use for at least 2 years prior to bid opening. Items of the same classification shall be identical including equipment, assemblies, parts, and components.

2.2 BRACKET ARMS

2.2.1 On Aluminum, Steel, Fiberglass, and Concrete Poles

Poles shall be provided with bracket arms of the support arm style and of the length indicated on drawings. Bracket arms shall conform to the design of the pole provided. The bracket arms shall be capable of supporting the equipment to be mounted on it with the maximum wind and ice loading encountered at the site. Strength of bracket arms shall be in accordance with ANSI C136.13. Steel brackets shall be galvanized. Wood bracket arms shall not be used.

2.3 CABLE

The Contractor shall provide all wire and cable. Wire and cable components shall be able to withstand the jobsite environment for a minimum of 20 years.

2.3.1 Insulated Cable

Cable shall be type USE conforming to UL 854, with copper conductors and type RHW or XHHW insulation conforming to UL 44, and shall include green ground conductor. Cable shall be provided with insulation of a thickness not less than that given in column A of TABLE 15.1 of UL 854. Cable shall be rated 600 volts. Parts of the cable system such as splices and terminations shall be rated not less than 600 volts. The size and number of conductors and the number of cables shall be as indicated. Conductors larger than No. 8 AWG shall be stranded.

2.3.2 NOT USED

2.3.3 Bare Copper Conductors

Medium-hard-drawn copper conductors shall conform to ASTM B 2 and ASTM B 8.

2.4 NOT USED

2.5 CABLE SPLICES AND CONNECTORS

Cable splices and connectors shall conform to UL 486A. Underground splices and connectors shall also conform to the requirements of ANSI C119.1.

2.6 CABLE BOXES

Boxes and covers shall be made of cast iron with zinc coated or aluminized finish, and shall be of the sizes indicated on drawings. The minimum inside dimensions shall be not less than 304.8 mm (12 inches) square by 152.4 mm (6 inches) deep and not less than required to house the cable splice. A suitable gasket shall be installed between the box and cover for watertightness. A sufficient number of screws shall be installed to hold the cover in place along the entire surface of contact. Grounding lugs shall be provided.

2.7 NOT USED

2.8 CONDUIT, DUCTS AND FITTINGS

2.8.1 Conduit, Rigid Steel

Rigid steel conduit shall conform to ANSI C80.1 and UL 6.

2.8.2 Conduit Coatings

Underground metallic conduit and fittings shall be coated with a plastic resin system conforming to NEMA RN 1, Type 40. Epoxy systems may also be used.

2.8.3 Conduit Fittings and Outlets

2.8.3.1 Boxes, Metallic Outlets

NEMA OS 1 and UL 514A.

2.8.3.2 NOT USED

2.8.3.3 NOT USED

2.8.3.4 Boxes, Switch (Enclosed), Surface Mounted

UL 98.

2.8.3.5 Fittings for Conduit and Outlet Boxes

UL 514B.

2.8.3.6 NOT USED

2.8.3.7 Fittings, PVC, for Use with Rigid PVC Conduit and Tubing

UL 514B.

2.8.4 Non-Metallic Duct

Non-metallic duct lines and fittings utilized for underground installation shall be suitable for the application. Duct shall be thick-wall, single, round-bore type. Material of one type shall be used. Schedule 40 polyvinyl chloride (PVC) shall conform to UL 651. Plastic utility duct and fittings manufactured without a UL label or listing shall be provided with a certification as follows: "The materials are suitable for use with 75 degree C (167 degrees F) wiring. No reduction of properties in excess of that specified for materials with a UL label or listing will be experienced if samples of the finished product are operated continuously under the normal conditions that produce the highest temperature in the duct."

2.9 NOT USED

2.10 GROUND RODS

Ground rods shall be of copper clad steel conforming to UL 467 not less than 19 mm (3/4 inch) in diameter by 3 m (10 feet) in length of the sectional type driven full length into earth.

2.11 POLES

Metal poles shall be the pole manufacturer's standard design for supporting the number of fixtures indicated. Poles shall be designed for a wind velocity of 44.7 meters per second (100 mph) at the base of the pole, for a wind gust factor of 1.3, and for the height and drag factors recommended by

AASHTO LTS-2. The effective projected area of luminaires and other pole-mounted devices shall be taken into account in pole design. Poles shall have grounding provisions. The type of pole shaft material provided shall not be mixed on any project. Grounding connection shall be provided near the bottom of each metal pole and at each concrete pole anchor base. Scratched, stained, chipped, or dented poles shall not be installed.

2.11.1 NOT USED

2.11.2 Steel Poles

Steel poles shall be hot-dip galvanized in accordance with ASTM A 123and shall not be painted. Poles shall have tapered tubular members, round in cross-section. Pole shafts shall be one piece. Poles shall be welded construction with no bolts, rivets, or other means of fastening except as specifically approved. Pole markings shall be approximately 900 to 1270 mm above grade and shall include manufacturer, year of manufacture, top and bottom diameters, length, and a loading tree. Attachment requirements shall be provided as indicated, including grounding provisions. Climbing facilities are not required. Bases shall be of the anchor bolt-mounted type.

2.11.3 NOT USED

2.11.4 NOT USED

2.11.5 NOT USED

2.11.6 Anchor Bolts

Anchor bolts shall be the pole manufacturer's standard, but not less than necessary to meet the pole wind and ice loading, herein and other specified design requirements.

2.12 NOT USED

2.13 NOT USED

2.14 NOT USED

2.15 ILLUMINATION

2.15.1 General Lighting

Luminaires, ballasts, lamps, and control devices required for general area shall be as shown.

2.16 LAMPS AND BALLASTS, HIGH INTENSITY DISCHARGE (HID) SOURCES

2.16.1 High-Pressure Sodium

Lamps shall conform to ANSI C78.1351. Ballasts shall conform to ANSI C82.4, or UL 1029. High-pressure sodium lamps shall be clear.

2.17 NOT USED

2.18 NOT USED

2.19 LUMINAIRE COMPONENTS

Luminaire components shall conform to the following: attachments, ANSI C136.3; voltage classification, ANSI C136.2; field identification marking, ANSI C136.15; interchangeability, ANSI C136.6 and ANSI C136.9; and sockets, ANSI C136.11.

2.20 LIGHTING CONTROL EQUIPMENT

2.20.1 Photo-Control Devices

Photo-control devices shall conform to ANSI C136.10. Each photo-control element shall be a replaceable, weatherproof, plug-in or twist-lock assembly adjustable operation range of approximately 5.4 to 53.8 lux. Luminaires shall be equipped with weatherproof plug-in or twist-lock receptacle to receive the photo-control element. Devices shall be of the double-throw type suitable for use with a mechanically held lighting contractor.

2.21 PHOTOMETRIC DISTRIBUTION CLASSIFICATION

Photometrics shall conform to IESNA ARP-8.

2.22 LUMINAIRES, FLOODLIGHTING

2.22.1 HID

HID lighting fixtures shall conform to UL 1572.

2.23 FIXTURES

Standard fixtures shall be as detailed on drawings. Illustrations shown on these sheets or on the drawings are indicative of the general type desired and are not intended to restrict selection to fixtures of any particular manufacturer. Fixtures of similar design, equivalent light distribution and brightness characteristics, equal finish and quality will be acceptable as approved.

2.23.1 Accessories

Accessories such as straps, mounting plates, nipples, or brackets shall be provided for proper installation.

2.23.2 NOT USED

2.23.3 In-Line Fuse

An in-line fuse shall be provided for each fixture, and shall consist of a fuse and a UL approved waterproof fuse holder rated at 30 amperes, 600 volts, with insulated boots. Fuse rating shall be 300 volts.

PART 3 EXECUTION

3.1 GENERAL

The Contractor shall install all system components, including government furnished equipment, and appurtenances in accordance with the manufacturer's instructions, ANSI C2, and contract documents, and shall furnish necessary hardware, fixtures, cables, wire, connectors, interconnections, services, and adjustments required for a complete and

operable system.

3.1.1 Current Site Conditions

The Contractor shall verify that site conditions are in agreement with the design package. The Contractor shall report all changes to the site or conditions that will affect performance of the system to the Government. The Contractor shall not take any corrective action without written permission from the Government.

3.2 NOT USED

3.3 PREVENTION OF CORROSION

3.3.1 Aluminum

Aluminum shall not be used in contact with earth or concrete, and where connected to dissimilar metal, shall be protected by approved fittings and treatment.

3.3.2 Steel Conduits

Steel conduits shall not be installed within concrete slabs-on-grade. Steel conduits installed underground or under slabs-on-grade, or penetrating slabs-on-grade, shall be field wrapped with 254 micrometers (0.010 inch) thick pipe-wrapping plastic tape applied with a 50 percent overlap, or shall have a factory-applied plastic resin, epoxy coating. Zinc coating may be omitted from steel conduit which has a factory-applied epoxy coating.

3.3.3 Cold Galvanizing

Field welds and/or brazing on factory galvanized boxes, enclosures, conduits, etc. shall be coated with a cold galvanized paint containing at least 95 percent zinc by weight.

3.4 CABLE INSTALLATION

Cable and all parts of the cable system such as splices and terminations shall be rated not less than 600 volts. The size and number of conductors and the number of cables shall be as indicated. Conductors larger than No. 8 AWG shall be stranded. Each circuit shall be identified by means of fiber or nonferrous metal tags, or approved equal, in each handhole and at each terminal.

3.4.1 Splices

Splices below grade shall be made with nonpressure-filled resin systems using transparent, interlocking, self-venting, longitudinally split plastic molds. Splices above grade shall be made with sealed insulated pressure connectors and shall provide insulation and jacket equal to that of the cable. In order to prevent moisture from entering the splice, jackets shall be cut back to expose the required length of insulation between the jacket and the tapered end of the insulation.

3.4.2 Installation in Duct Lines

Ground and neutral conductors shall be installed in duct with the associated phase conductors. Cable splices shall be made in handholes only.

3.4.3 NOT USED

3.4.3.1 NOT USED

3.4.3.2 Requirements for Installation in Duct

Cable shall be installed in duct lines. Ground and neutral conductors shall be installed in duct with the associated phase conductors. Pulling of cable into conduit from a fixed reel position will be permitted. Installation shall be in accordance with NFPA 70.

3.4.3.3 NOT USED

3.4.3.4 NOT USED

3.4.3.5 Warning Tape

Cable shall be placed below a plastic warning tape buried in the same trench or slot. A 0.127 mm (5 mil) red colored plastic tape, not less than 75 mm (3 inches) in width and suitably inscribed at not more than 3 m (10 feet) on centers with a continuous metallic backing and a corrosion-resistant 0.0254 mm (1 mil) metallic foil core to permit easy location of the buried cable, shall be placed approximately 300 mm below finished grade.

3.5 NOT USED

3.6 NOT USED

3.7 NOT USED

3.8 CONNECTIONS TO BUILDINGS

Cables shall be extended into the various buildings as indicated and shall be properly connected to the indicated equipment. Empty conduits to the indicated equipment from a point 1.5 m outside the building wall and 600 mm below finished grade are specified in Section 16415 ELECTRICAL WORK, INTERIOR. After installation of cables, conduits shall be sealed to prevent moisture or gases from entering the building.

3.9 DUCT LINES

3.9.1 Requirements

Numbers and size of ducts shall be as indicated or required if not shown. Duct lines shall be laid with a minimum slope of 100 mm per 30 m. Depending on the contour of the finished grade, the high point may be at a terminal, a manhole, a handhole, or between manholes or handholes. Short radius manufactured 90 degree duct bends may be used only for pole or equipment risers, unless specifically indicated as acceptable. The minimum manufactured bend radius shall be 450 mm (18 inches) for ducts of less than 80 mm (3 inches) in diameter, and 900 mm (36 inches) for duct 80 mm (3 inches) or greater in diameter. Otherwise, long sweep bends having a minimum radius of 7.6 m (25 feet) shall be used for a change of direction of more than 5 degrees, either horizontally or vertically. Both curved and straight sections may be used to form long sweep bends, but the maximum curve used shall be 30 degrees and manufactured bends shall be used. Ducts shall be provided with end bells when duct lines terminate in manholes or

handholes.

3.9.2 Treatment

Ducts shall be kept clean of concrete, dirt, or foreign substances during construction. Field cuts requiring tapers shall be made with proper tools and shall match factory tapers. A coupling recommended by the duct manufacturer shall be used when an existing duct is connected to a duct of different material or shape. Ducts shall be stored to avoid warping and deterioration with ends sufficiently plugged to prevent entry of any water or solid substances. Ducts shall be thoroughly cleaned before being laid. Plastic ducts shall be stored on a flat surface and protected from the direct rays of the sun.

3.9.3 NOT USED

3.9.4 Nonencased Direct-Burial

Top of duct lines shall be not less than 800 mm below finished grade and shall be installed with a minimum of 75 mm of earth around each duct, except that between adjacent electric power and communication ducts, 300 mm of earth is required. Bottom of trenches shall be smooth and free of stones, soft spots, and sharp objects. Where bottoms of trenches comprise materials other than sand, a 75 mm layer of sand shall be laid first and compacted to approximate densities of surrounding firm soil before installing ducts. Joints in adjacent tiers of duct shall be vertically staggered at least 150 mm. The first 150 mm layer of backfill cover shall be sand compacted as previously specified. The rest of the excavation shall be backfilled and compacted in 75 to 150 mm layers. Duct banks may be held in alignment with earth.

3.9.5 Installation of Couplings

Joints in each type of duct shall be made up in accordance with the manufacturer's recommendation for the particular type of duct and coupling selected and as approved.

3.9.5.1 Plastic Duct

Duct joints shall be made by brushing a plastic solvent on insides of plastic coupling fittings and on outsides of duct ends. Each duct and fitting shall then be slipped together with a quick 1/4 turn to set the joint tightly.

3.10 HANDHOLES

The exact locations shall be determined after carefully considering the locations of other utilities, grading, and paving. Exact locations shall be approved before construction is started.

3.11 POLE INSTALLATION

Pole lengths shall provide a luminaire mounting height of 12.2 m (40 feet). Luminaire mounting height may be increased by the height of the transformer base where required. The pole wiring harness shall be connected to the luminaire. Pole installation shall conform to the manufacturer's recommendations, NFPA 70, and ANSI C2. Poles shall be set straight and plumb.

3.11.1 Pole Brackets

Brackets shall be installed as specified by the manufacturer and as shown on drawings. Mounting hardware shall be sized appropriately to secure the mount, luminaire, and housing with wind and ice loading normally encountered at the site. Identical brackets shall be used with one type of luminaire.

3.11.2 Concrete Foundations

Concrete foundations shall have anchor bolts accurately set in the foundation using a template supplied by the pole manufacturer. Once the concrete has cured, the pole shall be set on the foundation, leveled on the foundation bolts, and secured with the holding nuts. The space between the foundation and the pole base shall be grouted. Concrete and grout work shall conform to Section 03300 CONCRETE FOR BUILDING CONSTRUCTION. Concrete shall be 21 MPa (3000 psi) at 28 days.

3.11.3 NOT USED

3.11.4 NOT USED

3.11.5 Pole Installation

Poles shall be mounted on cast-in-place or power-installed screw foundations. Concrete poles shall be embedded in accordance with the details shown. Conduit elbows shall be provided for cable entrances into pole interiors.

3.11.5.1 Cast-In-Place Foundations

Concrete foundations, sized as indicated, shall have anchor bolts accurately set in foundations using templates supplied by the pole manufacturer. Concrete work and grouting is specified in Section 03300 CONCRETE FOR BUILDING CONSTRUCTION. After the concrete has cured, pole anchor bases shall be set on foundations and leveled by shimming between anchor bases and foundations or by setting anchor bases on leveling nuts and grouting. Poles shall be set plumb. Anchor bolts shall be the manufactures standard, and not less than necessary to meet the pole wind loading and other specified design requirements.

3.11.5.2 Power-Installed Screw Foundations

Power-installed screw foundations having the required strength mounting bolt, and top plate dimensions may be utilized. Screw foundations shall be of at least 6.4 mm (1/4 inch) thick structural steel conforming to ASTM A 36 and hot-dip galvanized in accordance with ASTM A 123. Conduit slots in screw foundation shafts and top plates shall be marked to indicate orientation. Design calculations indicating adequate strength shall be approved before installation of any screw foundation is permitted.

3.12 LIGHTING

3.12.1 Lamps

Lamps of the proper type, wattage, and voltage rating shall be delivered to the project in the original containers and installed in the fixtures just before completion of the project.

3.12.2 Fixture Installation

Standard fixtures shall be installed as detailed and recommended by manufacturer. Illustrations shown on these sheets or on the drawings are indicative of the general type desired and are not intended to restrict selection of fixtures to any particular manufacturer. Fixtures of similar design, equivalent light-distribution and brightness characteristics, and equal finish and quality will be acceptable as approved.

3.12.2.1 Accessories

Accessories such as straps, mounting plates, nipples, or brackets shall be installed as required for proper installation.

3.12.2.2 In-Line Fuses

An in-line fuse shall be provided for each fixture.

3.13 NOT USED

3.14 LIGHTING CONTROL SYSTEM

Lighting control shall be by contactors and control devices as shown on the drawings.

3.15 GROUNDING

Grounding shall be in conformance with NFPA 70, the contract drawings, and the following. Grounding conductors shall be soft-drawn, stranded copper. Ground rods shall be driven into the earth so that after the installation is complete, the top of the ground rod will be approximately 300 mm below finished grade, except in handholes.

3.15.1 Ground Rods

The resistance to ground shall be measured using the fall-of-potential method described in IEEE Std 81. The maximum resistance of a driven ground rod shall not exceed 25 ohms under normally dry conditions. Whenever the required ground resistance is not met, additional electrodes shall be provided interconnected with grounding conductors, to achieve the specified ground resistance. The additional electrodes shall be up to three, 3 m (10 feet) rods spaced a minimum of 3 m (10 feet) apart driven perpendicular to grade. In high ground resistance, UL listed chemically charged ground rods may be used. If the resultant resistance exceeds 25 ohms measured not less than 48 hours after rainfall, the Contracting Officer shall be notified immediately. Connections below grade shall be fusion welded. Connections above grade shall be fusion welded or shall use UL 467 approved connectors.

3.15.2 Items to be Grounded

Ground conductors, metallic conduits, junction boxes, and noncurrent-carrying metallic parts of equipment shall be grounded. Connections above grade shall be made with solderless connectors, and those below grade shall be made by a fusion-welding process.

3.15.3 Lighting Pole

One ground rod shall be provided at each pole. Bases of metal or concrete lighting poles shall be connected to ground rods by means of No. 8 AWG bare

copper wire. Lighting fixture brackets on wood and concrete poles shall be grounded to a No. 6 AWG bare copper grounding conductor connected to the ground rod.

3.16 TESTS

3.16.1 NOT USED

3.16.2 Operating Test

After the installation is completed and at such time as the Contracting Officer may direct, the Contractor shall conduct an operating test for approval. The equipment shall be demonstrated to operate in accordance with the requirements specified. The test shall be performed in the presence of the Contracting Officer. The Contractor shall furnish instruments and personnel required for the test, and the Government will furnish the necessary electric power.

3.16.3 Ground Resistance Measurements

The resistance to ground shall be measured by the fall-of-potential method described in IEEE Std 81.

The contractor shall maintain a separate set of drawings, elementary diagrams and wiring diagrams of the lighting to be used for "as-built" drawings. This set shall be accurately kept up to date by the Contractor with all changes and additions to the lighting system. In addition to being complete and accurate, this set of drawings shall be kept neat and shall not be used for installation purposes. Upon completion of the as-built drawings, a representative of the Government will review the as-built work with the Contractor. If the as-built work is not complete, the Contractor will be so advised and shall complete the work as required.

-- End of Section --

SECTION 16710

PREMISES DISTRIBUTION SYSTEM

PART 1 GENERAL

1.1 REFERENCES

The publications listed below form a part of this specification to the extent referenced. The publications are referred to in the text by basic designation only.

ELECTRONIC INDUSTRIES ASSOCIATION (EIA)

EIA ANSI/TIA/EIA-568-A	(1995) Commercial Building Telecommunications Cabling Standard
EIA ANSI/TIA/EIA-569	(1996) Commercial Building Standard for Telecommunications Pathways and Spaces
EIA ANSI/TIA/EIA-606	(1993) Administration Standard for the Telecommunications Infrastructure of Commercial Buildings
EIA ANSI/TIA/EIA-607	(1994) Commercial Building Grounding and Bonding Requirements for Telecommunications
EIA TSB 67	(1995) Transmission Performance Specifications for Field Testing of Unshielded Twisted Pair Cabling Systems

INSULATED CABLE ENGINEERS ASSOCIATION (ICEA)

ICEA S-80-576	(1994) Communications Wire and Cable for Wiring of Premises

NATIONAL FIRE PROTECTION ASSOCIATION (NFPA)

NFPA 70	(1999) National Electrical Code

1.2 SYSTEM DESCRIPTION

The premises distribution system shall consist of inside-plant horizontal, riser, and backbone cables and connecting hardware to transport telephone and data (including LAN) signals between equipment items in a building.

1.3 ENVIRONMENTAL REQUIREMENTS

Connecting hardware shall be rated for operation under ambient conditions of 0 to 60 degrees C and in the range of 0 to 95 percent relative humidity, noncondensing.

1.4 QUALIFICATIONS

1.4.1 Minimum Contractor Qualifications

All work under this section shall be performed by and all equipment shall be furnished and installed by a certified Telecommunications Contractor, hereafter referred to as the Contractor. With the exception of furnishing and installing conduit, electrical boxes, and pullwires, this work shall not be done by the Electrical Contractor. The Contractor shall have the following qualifications in Telecommunications Systems installation:

a. Contractor shall have a minimum of 3 years experience in the application, installation and testing of the specified systems and equipment.

b. All supervisors and installers assigned to the installation of this system or any of its components shall have factory certification from each equipment manufacturer that they are qualified to install and test the provided products. General electrical trade staff (electricians) shall not be used for the installation of the premises distribution system cables and associated hardware.

c. All installers assigned to the installation of this system or any of its components shall have a minimum of 3 years experience in the installation of the specified copper and fiber optic cable and components.

1.4.2 Minimum Manufacturer Qualifications

The equipment and hardware provided under this contract will be from manufacturers that have a minimum of 3 years experience in producing the types of systems and equipment specified.

1.5 SUBMITTALS

Government approval is required for submittals with a "GA" designation; submittals having an "FIO" designation are for information only. The following shall be submitted in accordance with Section 01330 SUBMITTAL PROCEDURES:

SD-01 Data

Spare Parts; FIO.

Lists of spare parts, tools, and test equipment for each different item of material and equipment specified, after approval of detail drawings, not later than 1 month prior to the date of beneficial occupancy. The data shall include a complete list of parts and supplies, with current unit prices and source of supply, and a list of spare parts recommended for stocking.

SD-04 Drawings

Premises Distribution System; GA.

Detail drawings including a complete list of equipment and material. Detail drawings shall contain complete wiring and schematic diagrams and other details required to demonstrate that the system has been coordinated and will function properly as a system. Drawings shall include vertical riser diagrams, equipment rack details, elevation drawings of telecommunications closet walls, outlet face plate details for all outlet configurations, sizes and types of all cables, conduits, and cable trays. Drawings shall show proposed layout and anchorage of equipment and

appurtenances, and equipment relationship to other parts of the work including clearance for maintenance and operation.

Record Drawings; GA.

Record drawings for the installed wiring system infrastructure per EIA ANSI/TIA/EIA-606. The drawings shall show the location of all cable terminations and location and routing of all backbone and horizontal cables. The identifier for each termination and cable shall appear on the drawings.

SD-06 Instructions

Manufacturer's Recommendations; GA.

Where installation procedures, or any part thereof, are required to be in accordance with the recommendations of the manufacturer of the material being installed, printed copies of these recommendations, prior to installation shall be provided. Installation of the item will not be allowed to proceed until the recommendations are received and approved.

SD-08 Statements

Test Plan; GA.

Test plan defining the tests required to ensure that the system meets technical, operational and performance specifications, 30 days prior to the proposed test date. The test plan must be approved before the start of any testing. The test plan shall identify the capabilities and functions to be tested, and include detailed instructions for the setup and execution of each test and procedures for evaluation and documentation of the results.

Qualifications; GA.

The qualifications of the Manufacturer, Contractor, and the Installer to perform the work specified herein. This shall include proof of the minimum qualifications specified herein.

SD-09 Reports

Test Reports; GA.

Test reports in booklet form with witness signatures verifying execution of tests. Test results will also be provided on 89 mm diskettes in ASCII format. Reports shall show the field tests performed to verify compliance with the specified performance criteria. Test reports shall include record of the physical parameters verified during testing. Test reports shall be submitted within 14 days after completion of testing.

SD-13 Certificates

Premises Distribution System; GA.

Written certification that the premises distribution system complies with the EIA ANSI/TIA/EIA-568-A, EIA ANSI/TIA/EIA-569, and EIA ANSI/TIA/EIA-606 standards.

Materials and Equipment; GA.

Where materials or equipment are specified to conform, be constructed or tested to meet specific requirements, certification that the items provided conform to such requirements. Certification by a nationally recognized testing laboratory that a representative sample has been tested to meet the requirements, or a published catalog specification statement to the effect that the item meets the referenced standard, will be acceptable as evidence that the item conforms. Compliance with these requirements does not relieve the Contractor from compliance with other requirements of the specifications.

Installers; GA.

The Contractor shall submit certification that all the installers are factory certified to install and test the provided products.

SD-18 Records

Record Keeping and Documentation; GA.

Documentation on cables and termination hardware in accordance with EIA ANSI/TIA/EIA-606.

1.6 DELIVERY AND STORAGE

Equipment delivered and placed in storage shall be stored with protection from the weather, humidity and temperature variation, dirt and dust or other contaminants.

1.7 OPERATION AND MAINTENANCE MANUALS

Commercial off the shelf manuals shall be furnished for operation, installation, configuration, and maintenance for all products provided as a part of the premises distribution system. Specification sheets for all cable, connectors, and other equipment shall be provided.

1.8 RECORD KEEPING AND DOCUMENTATION

1.8.1 Cables

A record of all installed cable shall be provided in hard copy format per EIA ANSI/TIA/EIA-606. The cable records shall include the required data fields for each cable and complete end-to-end circuit report for each complete circuit from the assigned outlet to the entry facility per EIA ANSI/TIA/EIA-606.

1.8.2 Termination Hardware

A record of all installed patch panels and outlets shall be provided in hard copy format per EIA ANSI/TIA/EIA-606. The hardware records shall include only the required data fields per EIA ANSI/TIA/EIA-606.

PART 2 PRODUCTS

2.1 MATERIALS AND EQUIPMENT

Materials and equipment shall be the standard products of a manufacturer regularly engaged in the manufacture of the products and shall be the manufacturer's latest standard design that has been in satisfactory use for at least 1 year prior to installation. Materials and equipment shall

conform to the respective publications and other requirements specified below and to the applicable requirements of NFPA 70.

2.2 UNSHIELDED TWISTED PAIR CABLE SYSTEM

2.2.1 Cable Insulation

For each individual Category 5 cable, the insulation, material used on each pair shall be exactly the same in all physical, electrical, and chemical respects. The use of Teflon insulated, plenum rated Category 5 cable is acceptable for both plenum and non-plenum applications. If Teflon insulated plenum rated cable is used by the Contractor, it shall be Type 4x0, where all four pairs are Teflon insulated. Type 3x1 and 2x2 are not acceptable.

2.2.2 Riser Cable

Riser cable shall meet the requirements of ICEA S-80-576 and EIA ANSI/TIA/EIA-568-A for Category 3 100-ohm unshielded twisted pair cable. Cable shall be label-verified. Cable jacket shall be factory marked at regular intervals indicating verifying organization and performance level. Conductors shall be solid untinned copper 24 AWG. Cable shall be rated CMR per NFPA 70.

2.2.3 Horizontal Cable

Horizontal cable shall meet the requirements of EIA ANSI/TIA/EIA-568-A for Category 5 horizontal cable. Cable shall be label-verified. Cable jacket shall be factory marked at regular intervals indicating verifying organization and performance level. Conductors shall be solid untinned copper 24 AWG. Cable shall be rated CMG per NFPA 70.

2.2.4 Connecting Hardware

Connecting and cross-connecting hardware shall be the same category as the cable it serves. Hardware shall be in accordance with and EIA ANSI/TIA/EIA-568-A.

2.2.4.1 Telecommunications Outlets

Wall and desk outlet plates shall come equipped with up to four modular jacks as shown on drawings. Modular jacks shall be the same category as the cable they terminate and shall meet the requirements of EIA ANSI/TIA/EIA-568-A. Modular jack pin/pair configuration shall be T568A per EIA ANSI/TIA/EIA-568-A. Modular jacks shall be unkeyed. Faceplates shall be provided and shall be ivory in color, impact resistant plastic. Outlet assemblies used in the premises distribution system shall consist of modular jacks assembled into both simplex and duplex outlet assemblies in single or double gang covers as specified in this section and as indicated on the drawings. The modular jacks shall conform to the requirements of EIA ANSI/TIA/EIA-568-A, Category 5 (as shown).

2.2.4.2 Patch Panels

Patch panels for data service shall consist of eight-position modular jacks, with rear mounted type 110 insulation displacement connectors, arranged in rows or columns on 480 mm (19 inch) rack mounted panels. Jack pin/pair configuration shall be T568A per EIA ANSI/TIA/EIA-568-A. Jacks shall be unkeyed. Panels shall be provided with labeling space.

2.2.4.3 Patch Cords

Patch cords shall be cable assemblies consisting of flexible, twisted pair stranded wire with eight-position plugs at each end. Cable shall be label-verified. Cable jacket shall be factory marked at regular intervals indicating verifying organization and performance level. Patch cords shall be wired straight through; pin numbers shall be identical at each end and shall be paired to match T568A patch panel jack wiring per EIA ANSI/TIA/EIA-568-A. Patch cords shall be unkeyed. Patch cords shall be factory assembled.

2.2.4.4 Terminal Blocks

Terminal blocks for voice service shall be wall mounted wire termination units consisting of insulation displacement connectors mounted in plastic blocks, frames or housings. Blocks shall be type 66 which meet the requirements of EIA ANSI/TIA/EIA-568-A for category 3. Blocks shall be mounted on standoffs and shall include cable management hardware. Insulation displacement connectors shall terminate 22 or 24 gauge solid copper wire as a minimum, and shall be connected in pairs so that horizontal cable and connected jumper wires are on separate connected terminals.

2.3 NOT USED

2.4 NOT USED

2.5 NOT USED

2.6 EQUIPMENT RACKS

2.6.1 Floor Mounted Open Frame

Floor mounted equipment racks shall be welded steel relay racks with uprights to mount equipment 480 mm (19 inches) wide. Uprights shall be 75 mm deep channel, 32 mm wide, drilled and tapped 12-24 in a 13 mm pattern. Racks shall be provided with a standard top crossmember, and predrilled base plate to allow floor fastening. Open frame equipment racks shall be 2.1 m in height and painted. AC outlets shall be provided as shown.

2.6.2 NOT USED

2.6.3 Cable Guides

Cable guides shall be specifically manufactured for the purpose of routing cables, wires and patch cords horizontally and vertically on 480 mm (19 inch) equipment racks. Cable guides shall consist of ring or bracket-like devices mounted on rack panels for horizontal use or individually mounted for vertical use. Cable guides shall mount to racks by screws and/or nuts and lockwashers.

2.7 EQUIPMENT MOUNTING BACKBOARD

Plywood backboards shall be provided, sized as shown, painted with white or light grey fire retardant paint.

2.8 TELECOMMUNICATIONS OUTLET BOXES

Electrical boxes for telecommunication outlets shall be 117 mm square by 53 mm deep with minimum 9 mm deep single or two gang plaster ring as shown. Provide a minimum 25 mm conduit.

PART 3 EXECUTION

3.1 INSTALLATION

System components and appurtenances shall be installed in accordance with NFPA 70, manufacturer's instructions and as shown. Necessary interconnections, services, and adjustments required for a complete and operable signal distribution system shall be provided. Components shall be labeled in accordance with EIA ANSI/TIA/EIA-606. Penetrations in fire-rated construction shall be firestopped in accordance with Section 07270 FIRESTOPPING. Conduits, outlets cable trays, and raceways shall be installed in accordance with Section 16415 ELECTRICAL WORK, INTERIOR. Wiring shall be installed in accordance with EIA ANSI/TIA/EIA-568-A and as specified in Section 16415 ELECTRICAL WORK, INTERIOR. Wiring, and terminal blocks and outlets shall be marked in accordance with EIA ANSI/TIA/EIA-606. Cables shall not be installed in the same cable tray, utility pole compartment, or floor trench compartment with ac power cables. Cables not installed in conduit or wireways shall be properly secured and neat in appearance and, if installed in plenums or other spaces used for environmental air, shall comply with NFPA 70 requirements for this type of installation.

3.1.1 Horizontal Distribution Cable

The rated cable pulling tension shall not be exceeded. Cable shall not be stressed such that twisting, stretching or kinking occurs. Cable shall not be spliced. Cable shall not be run through structural members or in contact with pipes, ducts, or other potentially damaging items. Placement of cable parallel to power conductors shall be avoided, if possible; a minimum separation of 300 mm (12 inches) shall be maintained when such placement cannot be avoided. Cables shall be terminated; no cable shall contain unterminated elements. Minimum bending radius shall not be exceeded during installation or once installed. Cable ties shall not be excessively tightened such that the transmission characteristics of the cable are altered.

3.1.2 NOT USED

3.1.3 Telecommunications Outlets

3.1.3.1 Faceplates

As a minimum each jack shall be labeled as to its function and a unique number to identify cable link.

3.1.3.2 Cables

Unshielded twisted pair and fiber optic cables shall have a minimum of 150 mm of slack cable loosely coiled into the telecommunications outlet boxes. Minimum manufacturers bend radius for each type of cable shall not be exceeded.

3.1.4 Terminal Blocks

Terminal blocks shall be mounted in orderly rows and columns. Adequate

vertical and horizontal wire routing areas shall be provided between groups of blocks. Industry standard wire routing guides shall be utilized.

3.1.5 Unshielded Twisted Pair Patch Panels

Patch panels shall be mounted in equipment racks with sufficient modular jacks to accommodate the installed cable plant plus 10 percent spares. Cable guides shall be provided above, below and between each panel.

3.1.6 Fiber Optic Patch Panels

Patch panels shall be mounted in equipment racks with sufficient ports to accommodate the installed cable plant. A slack loop of fiber shall be provided within each panel. Loop shall be 900 mm in length. The outer jacket of each cable entering a patch panel shall be secured to the panel to prevent movement of the fibers within the panel, using clamps or brackets specifically manufactured for that purpose.

3.1.7 Equipment Racks

Open frame equipment racks shall be bolted to the floor. Cable guides shall be bolted or screwed to racks. Racks shall be installed level.

3.1.8 Rack Mounted Equipment

Equipment to be rack mounted shall be securely fastened to racks by means of the manufacturer's recommended fasteners.

3.2 TERMINATION

Cables and conductors shall sweep into termination areas; cables and conductors shall not bend at right angles. Manufacturer's minimum bending radius shall not be exceeded. When there are multiple system type drops to individual workstations, relative position for each system shall be maintained on each system termination block or patch panel.

3.2.1 Unshielded Twisted Pair Cable

Each pair shall be terminated on appropriate outlets, terminal blocks or patch panels. No cable shall be unterminated or contain unterminated elements. Pairs shall remain twisted together to within the proper distance from the termination as specified in EIA ANSI/TIA/EIA-568-A. Conductors shall not be damaged when removing insulation. Wire insulation shall not be damaged when removing outer jacket.

3.3 GROUNDING

Signal distribution system ground shall be installed in the telecommunications entrance facility and in each telecommunications closet in accordance with EIA ANSI/TIA/EIA-607 and Section 16415 ELECTRICAL WORK, INTERIOR. Equipment racks shall be connected to the electrical safety ground.

3.4 ADDITIONAL MATERIALS

The Contractor shall provide the following additional materials required for facility startup.

a. 10 of each type outlet.

b. 10 of each type cover plate.

3.5 ADMINISTRATION AND LABELING

3.5.1 Labeling

3.5.1.1 Labels

All labels shall be in accordance with EIA ANSI/TIA/EIA-606.

3.5.1.2 Cable

All cables will be labeled using color labels on both ends with encoded identifiers per EIA ANSI/TIA/EIA-606.

3.5.1.3 Termination Hardware

All workstation outlets and patch panel connections will be labeled using color coded labels with encoded identifiers per EIA ANSI/TIA/EIA-606.

3.6 TESTING

Materials and documentation to be furnished under this specification are subject to inspections and tests. All components shall be terminated prior to testing. Equipment and systems will not be accepted until the required inspections and tests have been made, demonstrating that the signal distribution system conforms to the specified requirements, and that the required equipment, systems, and documentation have been provided.

3.6.1 Unshielded Twisted Pair Tests

All metallic cable pairs shall be tested for proper identification and continuity. All opens, shorts, crosses, grounds, and reversals shall be corrected. Correct color coding and termination of each pair shall be verified in the communications closet and at the outlet. Horizontal wiring shall be tested from and including the termination device in the communications closet to and including the modular jack in each room. These test shall be completed and all errors corrected before any other tests are started.

3.6.2 Category 5 Circuits

All category 5 circuits shall be tested using a test set that meets the Class II accuracy requirements of EIA TSB 67 standard. Testing shall use the Basic Link Test procedure of EIA TSB 67. Cables which contain failed circuits shall be replaced and retested to verify the standard is met.

-- End of Section --

SECTION 16711

TELEPHONE SYSTEM, OUTSIDE PLANT

PART 1 GENERAL

1.1 REFERENCES

The publications listed below form a part of this specification to the extent referenced. The publications are referred to in the text by basic designation only.

AMERICAN SOCIETY FOR TESTING AND MATERIALS (ASTM)

ASTM A 228	(1993) Steel Wire, Music Spring Quality
ASTM C 338	(1993) Softening Point of Glass

ELECTRONIC INDUSTRIES ASSOCIATION (EIA)

EIA ANSI/EIA/TIA-455-25B	(1996) FOTP-25 Repeated Impact Testing of Fiber Optic Cables and Cable Assemblies
EIA ANSI/EIA/TIA-455-30B	(1991) FOTP-30 Frenquency Domain Measurement of Multimode Optical Fiber Information Transmission Capacity
EIA ANSI/EIA-455-33A	(1987) FOTP-33 Fiber Optic Cable Tensile Loading and Bending Test
EIA ANSI/TIA/EIA-455-41A	(1993) FTOP-41 Compressive Loading Resistance of Fiber Optic Cable
EIA ANSI/EIA/TIA-455-46A	(1990) FOTP-46 Spectral Attenuation Measurement for Long-Length, Graded-Index Optical Fibers
EIA ANSI/EIA/TIA-455-47B	(1992) FOTP-47 Output Far Field Radiation Pattern Measurement
EIA ANSI/EIA/TIA-455-51A	(1991) FOTP-51 Pulse Distortion Measurement of Multimode Glass Optical Fiber Information Transmission Capacity
EIA ANSI/EIA/TIA-455-53A	(1990) FOTP-53 Attenuation by Substitution Measurement for Multimode Graded-Index Optical Fibers or Fiber Assemblies Used in Long Length Communications Systems
EIA ANSI/EIA-455-65	(1988) FOTP-65 Optical Fiber Flexure Test
EIA ANSI/EIA-455-81A	(1992) FOTP-81 Compound Flow (Drip) Test for Filled Fiber Optic Cable
EIA ANSI/EIA/TIA-455-82B	(1992) FOTP-82 Fluid Penetration Test for Fluid-Blocked Fiber Optic Cable

INSULATED CABLE ENGINEERS ASSOCIATION (ICEA)

ICEA S-56-434	(1983; R 1991) Polyolefin Insulated Communication Cables for Outdoor Use

INSTITUTE OF ELECTRICAL AND ELECTRONICS ENGINEERS (IEEE)

IEEE C2	(1997) National Electrical Safety Code

NATIONAL FIRE PROTECTION ASSOCIATION (NFPA)

NFPA 70	(1999) National Electrical Code

RURAL ELECTRIFICATION ADMINISTRATION (REA)

REA PC-2	(1995) Splicing Copper and Fiber Optic Cables
REA PC-4	(1976) Acceptance Tests and Measurements of Telephone Plant
REA PE-33	(1985) Shield Bonding Connectors
REA PE-89	(1993) REA Specification for Filled Telephone Cables
REA PE-60	(1979) Trunk Carrier Systems
REA TE&CM 641	(1973) Construction of Buried Plant
REA TE&CM 823	(1980; R Aug 1990) Electrical Protection by Use of Gas Tube Arrestors

UNDERWRITERS LABORATORIES (UL)

UL 497	(1995; Rev thru May 1996) Protectors for Paired Conductor Communication Circuits

1.2 SUBMITTALS

Government approval is required for submittals with a "GA" designation; submittals having an "FIO" designation are for information only. The following shall be submitted in accordance with Section 01330 SUBMITTAL PROCEDURES:

SD-04 Drawings

Telephone System; GA.

Detail drawings consisting of a complete list of equipment and material including manufacturer's descriptive and technical literature, performance charts and curves, catalog cuts and installation instructions. Detail drawings shall also contain complete wiring and schematic diagrams and any other details required to demonstrate that the cable system has been coordinated and will properly support the switching and transmission systems identified in the specification and drawings. Drawings shall show proposed layout and anchorage of equipment and appurtenances, and equipment relationship to other parts of the work including clearance for maintenance

and operations. System drawings showing final configuration, including the location, gauge, pair, duct and innerduct arrangement, or conductor assignment of outside plant, and protector and connector blocks layout at the termination points after installation.

SD-08 Statements

Test Plans; GA.

Test plans shall define all tests required to ensure that the system meets specified required. The test plans shall define milestones for the tests, equipment, personnel, facilities, and supplies required. The test plans shall identify the capabilities and functions to be tested.

SD-09 Reports

Acceptance Tests; GA.

Test reports in booklet form showing all field tests performed, upon completion and testing of the installed system.

Installation Procedures; GA.

Where installation procedures, or any part thereof, are required to be in accordance with the recommendations of the manufacturer of the material being installed, printed copies of these recommendations, prior to installation. Installation of the item will not be allowed to proceed until the recommendations are received and approved.

SD-13 Certificates

Telephone System; GA.

Where materials or equipment are specified to conform to the standards or publications and requirements of FCC, REA, ANSI, ASTM, NFPA, EIA, or UL, proof that the items furnished under this section of the specification conform to the specified requirements.

1.3 DELIVERY AND STORAGE

All cable shall be shipped on reels. The diameter of the drum shall be at least 13 times the diameter of the cable. The reels shall be substantial and so constructed as to prevent damage during shipment and handling. The outer end of the cable shall be securely fastened to the reel head so as to prevent the cable from becoming loose in transit. The inner end of the cable shall project into a slot in the side of the reel, or into a housing on the inner slot of the drum, in such a manner and with sufficient length to make it available for testing. The inner end shall be fastened so as to prevent the cable from becoming loose during installation. End seals shall be applied to each of the cables to prevent moisture from entering the cable. The reels with cable shall be suitable for outside storage conditions when the temperature ranges from minus 40 degrees C to plus 65 degrees C, with relative humidity from 0 to 100 percent. Equipment, other than cable, delivered and placed in storage shall be stored with protection from the weather, humidity and temperature variation, dirt and dust, or other contaminants.

PART 2 PRODUCTS

2.1 STANDARD PRODUCTS

Materials and equipment shall be the standard products of a manufacturer regularly engaged in the manufacture of such products and shall be the manufacturer's latest standard design that has been in satisfactory use for at least 2 years prior to bid opening. Each major component of equipment shall have the manufacturer's name and type identified on the equipment.

2.2 DISTRIBUTION FRAME

2.2.1 NOT USED

2.2.1.1 NOT USED

2.2.1.2 Protector Modules

The protector modules shall be of the three-electrode gas tube type. Protection modules shall be classified as light, medium, heavy, or maximum duty depending on their performance in categories of impulse life, maximum surge impulse and 60 Hz current carrying capacity as specified in REA TE&CM 823. The gas modules shall be fail-short and shall shunt high voltage to ground in less than 100 microseconds, shall have an external spark gap, and shall comply with UL 497.

2.3 CABLE

2.3.1 Copper Conductor Cable

Copper conductor cable shall conform to the following:

2.3.1.1 NOT USED

2.3.1.2 Direct Buried

REA PE-89 with corrugated steel armor and polyethylene jacket.

2.3.2 Fiber Optic Cable

Reeled fiber optic cable shall contain 12 fibers and shall be of continuous manufacture with no factory splices in the fiber.

2.3.2.1 Compatible Components

Materials used within a given cable shall be compatible with all other materials used in the same cable when such materials come into intimate contact. All cable components used shall have no adverse affect on optical transmission or on the mechanical integrity characteristics of the fiber placed in the cable. All materials used shall be nontoxic, noncorrosive, and shall present no dermal hazard. The minimum required material components applied to fiber optic cable construction are central core or sheath strength member, color-coded optical fibers, inner jacket, pulling strength members, and outer jacket.

2.3.2.2 Cable Cores

A central core member or sheath strength member shall be included to serve as a cable core foundation to reduce strain on the fibers but not to serve as a pulling strength member. The material of the central core member shall be nonmetallic. The sheath strength member may be either metallic or

nonmetallic. The metallic strength element shall be spring quality music type wire per ASTM A 228. The nonmetallic strength element shall be glass filament.

2.3.2.3 Optical Fiber

Multimode optical fibers shall be contained in the cable. Multimode fiber shall be the graded index optical glass. The core diameter of the fiber shall be 62.5 microns plus or minus 3 microns. The cladding diameter shall be 125 microns plus or minus 5 microns. The core-cladding offset shall be less than 3 microns. The minimum tensile strength of the fiber after primary protective coating shall be greater than 344 MPa (50,000 psi). The softening point of the clad material of the optical fiber shall be 1630 degrees C plus or minus 50 degrees C in compliance with ASTM C 338.

2.3.2.4 Optical Fiber Coatings

The optical fiber shall be coated with a suitable material to preserve the intrinsic high tensile strength of the glass fiber. The outside diameter of the coated optical fiber shall be 250 microns plus or minus 15 microns. The coating material shall be readily removable, mechanically or chemically, without damaging the optical fibers when the removal is desired.

2.3.2.5 Color Coding

The primary protective coated fiber shall be coated with a color-code coating for individual fiber identification. The maximum outside diameter of color-code coated fiber shall be less than 300 microns.

2.3.2.6 Fiber Protection

The color-code coated fibers shall be surrounded with either loose buffer tubes, channels or other innovative design, or in a tight buffer construction, for protection from external mechanical and environmental influences. The interior of the tube shall be filled with a suitable gel-filling compound to prevent water migration. The loose tube buffering, channel or other innovative design, or tight buffer construction, shall be color coded for the tube identification. The material of the buffering tube shall be PVC, mylar, nylon, or a functionally equivalent material.

2.3.2.7 Tint Requirements

The color concentrates or tints used to color the optical fibers and the buffer tubes shall not be susceptible to migration and chemical reaction with gel-filling compound.

2.3.2.8 Buffer Tubes

The buffer tubes shall be located concentrically around the cable central core member and covered with a black, low or medium density polyethylene inner jacket in accordance with ICEA S-56-434.

2.3.2.9 Filling Compound Requirements

The inner jacket interior and buffer cavity shall contain a gel-type filling compound. The filling compound shall be of suitable viscosity so that it shall protect the optical fibers against the ingress of water and/or soluble chemicals and shall not flow at the temperature of up to 65 degrees C. The gel-filling compound shall be colorless, electrically

nonconducting, inert gel-type, waterproof, nontoxic, with no dermal hazards, and compatible chemically and mechanically with all cable components and associated splice hardware materials to which it may make contact. The gel filling shall be removable, as required, using commercially available products under field conditions.

2.3.2.10 Tensil Strength

The cable shall contain a nonconductive central strength member as a well as a layer of aramid type yarn encircling the cable core. The strength member shall provide a maximum pulling load of 1335 Newtons.

2.3.2.11 Outer Jacket

Black, low or medium density, high-molecular weight, polyethylene materials shall be applied longitudinally over all the inner jacket and sheathing strength member to form the cable outer jacket, in accordance with ICEA S-56-434. The outer jacket shall be smooth, concentric, non-nutrient to fungus, and free from holes, splits, blisters, or other imperfections. The overall outside cable diameter shall not exceed 19.1 mm (0.75 inch).

2.3.2.12 Armor Shield

A metallic armor shield shall be provided for additional tensile strength, rodent protection, and high crush and moisture resistance. The material of the metallic armoring shall be metallic tube or steel corrugation, coated with anti-corrosion material, and sealed at the longitudinal overlap.

2.3.2.13 Fiber Differentiation

The individual optical fiber shall be easily and positively identified from the buffer tube color code and the optical fiber primary coating color code.

2.3.2.14 Cable Labeling

The outer jacket shall bear the manufacturer's name, year of manufacture, and length marker. The length marking shall employ continuous four- or five-digit number in meters, such as:

Manufacturer's Name - Year
XXXX meter

The markings shall be repeated clearly and distinguishably, on every meter on the cable outer jacket. The marking ink shall be fully compatible with the jacket material, nonsmearing, nonwater soluble, abrasion resistant, and durable enough to withstand field handling during placement and subsequent operations.

2.3.2.15 Attenuation

The optical attenuation of each optical fiber in the reeled cable shall be no greater than 1.0 dB/km within a peak emissive region of 850 to 1300 nm. The attenuation shall be measured on completed cable reel length, and normalized linearly to 1 km. The measurement method shall be in accordance with EIA ANSI/EIA/TIA-455-46A or EIA ANSI/EIA/TIA-455-53A.

2.3.2.16 Bandwidth

Each optic fiber within the cable (reeled) shall have its bandwidth

measured between 3 dB optical power points, as compared to a reference signal, for a light source with a peak optical emissive region of 850 to 1300 nm. The effective system bandwidth of at least 1 GHz-km is required. The effective system bandwidth is the bandwidth length product calculated from the measured bandwidth multiplied by the cable length raised to the negative length dependance factor (or gamma factor). Gamma shall be in the range of 0.85 to 0.9. The bandwidth measurement shall be in accordance with EIA ANSI/EIA/TIA-455-30B frequency domain or EIA ANSI/EIA/TIA-455-51A time domain.

2.3.2.17 Numerical Aperture

The numerical aperture of each optical fiber shall be 0.2 plus or minus 0.02 within an optical emissive region of 850 to 1300 nm. The method of numerical aperture measurement shall be in accordance with EIA ANSI/EIA/TIA-455-47B.

2.3.2.18 Bending Tolerance

The cable shall be able to withstand bending to a minimum radius of ten times the cable outer diameter with no tensile load applied, and of twenty times the cable outer diameter with maximum tensile load applied during installation, without damage to cable components or degradation of the optical fiber performance at room temperature.

2.3.2.19 Tensile Load Tolerance

The fiber optic cable shall withstand a pull force of at least 1780 Newtons, to be applied to the pulling strength member during the installation and a tensile load of at least 300 Newtons during operation without incurring any damage or detriment to fiber optic cable and optical performance. The tensile strength test shall be per EIA ANSI/EIA-455-33A.

2.3.2.20 Cyclic Flexing Tolerance

The fiber optic cable shall withstand at least twenty bending cycles at minimum bend radius without damage to the fiber optic cable components or degrading optical performance. The cyclic flexing test shall be in accordance with EIA ANSI/EIA-455-65.

2.3.2.21 Crush Resistance

The minimum crush resistance of the fiber optical cable shall be greater than 650 Newton/cm without damage to cable components or degrading optical performance. The crush resistance test shall be in accordance with EIA ANSI/TIA/EIA-455-41A.

2.3.2.22 Impact Resistance

The fiber optic cable shall be capable of withstanding twenty impacts, at a force of 5 Newtons-meters, without damage to cable components, or degradation of optical performance. The impact resistance test shall be in accordance with EIA ANSI/EIA/TIA-455-25B.

2.3.2.23 Gel Compound Temperature Tolerance

The optic cable shall be tested for the ability of the gel-filling compound in the interior of the inner jacket and buffer to resist flow at the temperature range of minus 40 degrees C to 60 degrees C in accordance with

EIA ANSI/EIA-455-81A.

2.3.2.24 Fluid Penetration Test

The optic cable shall be capable of preventing the entry and axial migration of 62 kPa (9 psi) pressurized water when subjected to fluid penetration testing in accordance with EIA ANSI/EIA/TIA-455-82B.

2.3.2.25 Performance Requirements

The fiber optic cable shall comply with the mechanical performance requirements herein while used in duct applications where the temperature varies minus 20 degrees C to plus 60 degrees C. Optical performance degradation shall be less than 5 percent of the optical performance requirements in the temperature range of minus 20 degrees C to plus 60 degrees C. The fiber optic cable shall not be damaged in storage where the temperature may vary from minus 40 degrees C to plus 65 degrees C.

2.3.2.26 Defects and Imperfections

Fiber optic cables shall be free of material and manufacturing defects, and of dimensional nonuniformities which would seriously impair the functionality of the cables. The fiber optic cables shall also be free from surface imperfections and internal defects which would prevent them from meeting the mechanical and transmission requirements of this specification.

2.4 CONDUIT

Conduit as specified in Section 16415 ELECTRICAL WORK, INTERIOR and Section 16375 ELECTRICAL DISTRIBUTION SYSTEM, UNDERGROUND and as shown shall be furnished.

2.5 NOT USED

2.6 NOT USED

2.7 NOT USED

2.8 NOT USED

2.9 MISCELLANEOUS ITEMS

2.9.1 Shield Connectors

Shield connectors shall make a stable, low-impedance electrical connection between the shield of the communications cable and a conductor such as a strap, bar, or wire. The connector shall be made of tin-plated tempered brass. Shield bond connectors shall comply with REA PE-33.

2.9.2 Grounding Braid

Grounding braid shall provide low electrical impedance connections for dependable shield bonding. The braid shall be made from flat tin-plated copper.

2.9.3 Cable Warning Tape

Cable warning tape shall be a minimum of 75 mm (3 inches) wide, orange in

color, and suitable for buried applications. The warning tape shall be continuously imprinted with the words "WARNING - COMMUNICATIONS CABLE BELOW" at not more than 1.2 m (48 inches) intervals. Tape shall be 5 mil thickness with a corrosion-resistant 1 mil metallic foil core.

PART 3 EXECUTION

3.1 INSTALLATION

All system components and appurtenances shall be installed in accordance with the manufacturer's instructions and as shown. All necessary interconnections, services, and adjustments required for a complete and operable telephone system shall be provided. Final connections to the existing base distribution shall be by others. All installation work must be done in accordance with the safety requirements set forth in the general requirements of IEEE C2 and NFPA 70.

3.1.1 Buried Cable

3.1.1.1 Cable Installation

Buried cable installation shall be accomplished in accordance with the requirements set forth in REA TE&CM 641.

3.1.1.2 Cable Inspection and Repair

All buried cable and wire used in the construction of the project shall be handled with care. Each reel shall be inspected for cuts, nicks or other damage. All damage shall be repaired to the satisfaction of the Contracting Officer. The reel wrap shall remain intact on the reel until the cable or wire is ready to be placed.

3.1.1.3 Cable Laying

Cable laying operations shall commence at a switching location advancing outwards without any breaks to the end of the leads.

3.1.1.4 Cable Depth

Cables shall be placed at a minimum depth of750 mm. A 75 mm (3 inch) wide plastic warning tape shall be placed approximately 450 mm above the cables and not less than 150 mm from ground level.

3.1.1.5 NOT USED

3.1.1.6 Telephone Cable Bends

Telephone cable bends shall have a radius of not less than 10 times the cable diameter.

3.1.1.7 Penetrations

Penetrations in walls, ceilings or other parts of the building, made to provide for cable access, shall be caulked and sealed. All building entries shall be underground through waterproof facilities.

3.1.1.8 Cable Conduit for Traffic Areas

Where direct buried cable will pass under sidewalks, roads or other paved

areas, the cable shall be placed in minimum 103 mm (4 inch) rigid galvanized steel conduit or Schedule 80 PVC. Trenches shall be backfilled with earth and mechanically tamped a 150 mm lifts so that the earth is restored to the same grade as adjacent undisturbed material.

3.1.1.9 Trenchfill and Backfill for Rocky Soil

When placing cable in a trench in rocky soil, the cable shall be cushioned by a fill of sand or selected soil at least 50 mm thick on the floor of the trench before placing the cable or wire. The backfill for at least 100 mm above the wire or cable shall be free from stones, rocks, or other hard or sharp materials which might damage the cable or wire.

3.1.2 NOT USED

3.1.3 NOT USED

3.1.4 NOT USED

3.1.5 Surge Protection

All cables and conductors, except fiber optic cable, which serve as communication lines through off-premise lines, shall have surge protection installed at each end which meet the requirements of REA PE-60.

3.2 SPLICING

3.2.1 Copper Conductor Splices

Copper conductor cable splicing shall be accomplished in accordance with REA PC-2.

3.3 GROUNDING

Except where specifically indicated otherwise, all exposed noncurrent carrying metallic parts of telephone equipment, cable sheaths, cable splices, and terminals shall be grounded.

3.3.1 Master Ground Bar (MGB)

The Contractor shall provide a copper MGB which shall be the hub of the basic grounding system providing a common point of connection for ground from outside cable, MDF, and equipment. The Contractor shall establish a MGB to ground resistance, including ground, of 5 ohms or less.

3.3.2 Incoming Outside Plant Cables

3.3.2.1 Cable Entrance Ground Bar

The Contractor shall provide a Cable Entrance Ground Bar (CEGB) to which all incoming outside plant cable shields shall be bonded directly. The CEGB shall be a copper ground bar provided for the purpose of terminating incoming telephone cable shields on a common connector point. The CEGB shall be connected to the MGB by the most direct route utilizing a copper wire conductor with a total resistance of less than 0.01 ohms.

3.3.2.2 Main Distribution Frame Ground Bar

All shields of cable stubs to connector block shall be bonded to the Main

Distribution Frame Ground Bar (MDFB). The MDFB shall be established by the Contractor and shall consist of a copper ground bar at the bottom of the MDF used as the connection point for the cable stub shields to connector blocks and MDF protector assemblies.

3.3.2.3 Shields

The shields of all incoming cables shall not be bonded across the splice to the cable stubs. The shields of the incoming cables shall be grounded to the CEGB.

3.3.3 Main Distribution Frame Grounding

3.3.3.1 Protection Assemblies

The protector assemblies shall be mounted directly on the backboard. The assemblies shall be connected with a No. 6 AWG copper conductor to provide a low resistance path to the MDFB.

3.3.3.2 MGB Connection

The MDFB shall be connected to the MGB by a copper wire conductor with a total resistance of less than 0.01 total ohms.

3.4 ACCEPTANCE TESTS

The Contractor shall provide all personnel, equipment, instrumentation, and supplies necessary to perform all required testing. Notification of any planned testing shall be given to the Contracting Officer at least 14 days prior to any test, and in no case shall notice be given until after the Contractor has received written Contracting Officer approval of the test plans as specified. The test plans shall define all the tests required to ensure that the system meets technical, operational, and performance specifications. The test plans shall define milestones for the tests, equipment, personnel, facilities, and supplies required. The test plans shall identify the capabilities and functions to be tested.

3.4.1 Copper Conductor Cable

The following acceptance tests shall be performed in accordance with REA PC-4:

a. Shield continuity.

b. Conductor continuity.

c. Conductor insulation resistance.

d. Structural return loss.

e. Cable insertion loss and loss margin at carrier frequencies.

f. Shield ground for single jacketed cables.

g. DC loop resistance.

3.4.2 Fiber Optic Cable

Three optical tests shall be performed: Optical Time Domain Reflectometry

(OTDR) Test, Attenuation Test, and Bandwidth Test. These tests shall be performed on the completed end-to-end spans which include the near-end pre-connectorized single-fiber cable assembly, outside plant as specified, and the far-end pre-connectorized single-fiber cable assembly. The following acceptance tests shall be performed for each fiber in the completed cable length.

3.4.2.1 OTDR Test

The OTDR test shall be used to determine the adequacy of the cable installations. The OTDR tests will show any irregularities, such as discontinuities, micro-bendings, improper splices, for the cable span under test. Hardcopy fiber signature records shall be obtained from the OTDR for each fiber in each span and shall be included in the test results. The OTDR test shall be measured in both directions. A reference length of fiber, 1 km minimum, used as the delay line shall be placed before the new end connector and after the far end patch panel connectors for inspection of connector signature.

3.4.2.2 Attenuation Test

End-to-end attenuation measurements shall be made on all fibers, in both directions, using a 850 nanometer light source at one end and the optical power meter on the other end. These tests will be used to verify that the cable system attenuation requirements are met. The measurement method shall be in accordance with EIA ANSI/EIA/TIA-455-53A.

3.4.2.3 Bandwidth Test

The end-to-end bandwidth of all multimode fiber span links shall be measured by the frequency domain method. The bandwidth shall be measured in both directions on all fibers. The bandwidth measurements shall be in accordance with EIA ANSI/EIA/TIA-455-30B.

-- End of Section --

SECTION 16721

FIRE DETECTION AND ALARM SYSTEM

PART 1 GENERAL

1.1 REFERENCES

The publications listed below form a part of this specification to the extent referenced. The publications are referred to in the text by basic designation only.

INSTITUTE OF ELECTRICAL AND ELECTRONICS ENGINEERS (IEEE)

IEEE C62.41	(1991) Surge Voltages in Low-Voltage AC Power Circuits

NATIONAL FIRE PROTECTION ASSOCIATION (NFPA)

NFPA 70	(1999) National Electrical Code
NFPA 72	(1996) National Fire Alarm Code

UNDERWRITERS LABORATORIES (UL)

UL-04	(1994) Fire Protection Equipment Directory
UL 6	(1993) Rigid Metal Conduit
UL 464	(1990) Audible Signal Appliances
UL 467	(1993) Grounding and Bonding Equipment
UL 797	(1993) Electrical Metallic Tubing
UL 864	(1991; Rev thru May 1994) Control Units for Fire-Protective Signaling Systems
UL 1242	(1983; Rev thru Jul 1993) Intermediate Metal Conduit

1.2 GENERAL REQUIREMENTS

Furnish and install a complete Fire Alarm System as described herein and as shown on the plans; to be wired, connected, and left in first class operating condition. The system shall use closed loop initiating device circuits with individual zone supervision, individual notification appliance circuit supervision, incoming and standby power supervision. Include a control panel, manual pull stations, automatic fire detectors, Audio/Visual devices, all wiring, connections to devices, outlet boxes, junction boxes, and all other necessary materials for a complete operating system.

The fire alarm control panel shall allow for loading or editing special instructions and operating sequences as required. The system is to be capable of on-site programming to accommodate facilitate expansion,

building parameter changes, or changes as required by local codes. All software operations are to be stored in a non-volatile programmable memory within the fire alarm control panel. Loss of primary and secondary power shall not erase the instructions stored in memory.

All panels and peripheral devices shall be the standard product of a single manufacturer and shall display the manufacturer's name on each component. The catalog numbers specified under this section are those of Simplex Time Recorder Co. and constitute the type, product quality, material, and desired operating features.

1.2.1 Nameplates

Major components of equipment shall have the manufacturer's name, address, type or style, voltage and current rating, and catalog number on a noncorrosive and nonheat-sensitive plate which is securely attached to the equipment.

1.2.2 Keys and Locks

Locks shall be keyed alike.

1.2.3 Tags

Tags with stamped identification number shall be furnished for keys and locks.

1.2.4 Verification of Dimensions

The Contractor shall become familiar with all details of the work, verify all dimensions in the field, and shall advise the Contracting Officer of any discrepancy before performing the work.

1.2.5 Compliance

The fire detection and internal alarm system and the central reporting system shall be configured in accordance with NFPA 72. The equipment furnished shall be compatible and be UL listed or FM approved or approved or listed by a nationally recognized testing laboratory in accordance with the applicable NFPA standards.

Additionally, the entire installed system and all integrated system operations shall be within the guidelines of New York BOCA Basic Building Code.

1.2.6 Manufacturer's Services

Services of a manufacturer's representative who is experienced in the installation, adjustment, testing, and operation of the equipment specified shall be provided. The representative shall supervise the installation, adjustment, and testing of the equipment.

1.3 SYSTEM DESIGN

1.3.1 Operation

Under normal condition, the front panel shall display a "SYSTEM NORMAL" message and the current time and date.

Should an abnormal condition be detected, the appropriate LED (Alarm, Supervisory, or Trouble) shall flash. The panel audible signal shall pulse for alarm conditions and sound steadily for trouble and supervisory conditions.

The panel shall display the following information relative to the abnormal condition of a point in the system:

a. Custom location label (40 characters minimum).

b. Type of device (i.e. smoke, pull station, water-flow, etc.)

c. Point status (i.e. alarm, trouble).

These three characteristics relative to an abnormal condition of a point shall be displayed simultaneously in alphanumeric format.

1.3.1.1 History Logging

In addition to any required printer output, the control panel shall have the ability to store a minimum of three hundred (300) events in an alarm log plus a minimum of three hundred (300) events in a separate trouble log.

1.3.1.2 Walk Test With History Logging

The system shall be capable of being tested by one person. While in testing mode, the alarm activation of an initiating device circuit shall be silently logged as an alarm condition in the historical data file. The panel shall automatically reset itself after logging out of the alarm.

1.3.2 Alarm Sequence

1.3.2.1

The system alarm operation subsequent to the alarm activation of any manual station, automatic detection device, or sprinkler flow switch is to be as follows:

a. All selected audible alarm notification appliances shall sound a continuous fire alarm signal until silenced by the alarm silence switch at the control panel.

b. All selected visible alarm notification appliances (Xenon Strobes) shall display a continuous pattern until Extinguished by the Alarm Silence Switch.

c. An alarm is to be displayed on the panel display. The alarm LED shall flash on the control panel and the remote annunciator until the alarm has been acknowledged at the control panel. Once acknowledged, this same LED shall latch on. A subsequent alarm received from another zone after acknowledged shall flash the alarm LED on the control panel and the panel display shall show the new alarm information.

   A pulsing alarm tone shall occur within the control panel and the remote annunciator until acknowledge.

1.3.2.2

The activation of any system smoke detector shall initiate an Alarm Verification operation whereby the panel will reset the activated detector and wait for a second alarm activation. If, within one (1) minute after resetting, a second alarm is reported from the same or any other smoke detector, the system shall process the alarm as described previously. If no second alarm occurs within one minute the system is to resume normal operation. The Alarm Verification is to operate only on smoke detector alarms. Other activated initiating devices shall be processed immediately. The alarm verification operation is to be selectable by device.

1.3.2.3

Alarm and trouble conditions shall be immediately displayed on the control panel front alphanumeric display. If more alarms or troubles are in the system, the operator may scroll to display new alarms.

1.3.2.4

Upon activation of a system “General Alarm”, trouble, and supervisory condition the panel shall communicate this condition to the existing Simplex 2120 Central Monitoring Panel via a dedicated telephone line.

1.3.3 Supervision

1.3.3.1

There shall be a minimum of four independently supervised and independently fused notification appliance circuits for alarm A/V’s and Strobes. Circuits shall be Style 2. Disarrangement conditions of any circuit shall not affect the operation of other circuits.

1.3.3.2

The incoming power to the system shall be supervised so that any power failure must be audibly and visibly indicated at the control panel. A green "power on" LED shall be displayed continuously while incoming power is present.

1.3.3.3

The system batteries shall be supervised so that a low battery condition or disconnection of the battery shall be audibly and visibly indicated at the control panel and the remote annunciator.

1.3.3.4

Alarm initiation devices shall be connected to independent supervised circuits or provided with status polling. Circuits shall be Style 6.

1.3.4 Power Requirements

1.3.4.1

The control panel shall receive 120 VAC power (as noted on the plans) via a dedicated fused disconnect circuit.

1.3.4.2

All circuits requiring system operating power shall be 24VDC and shall be individually fused at the control panel.

1.3.4.3

The electrical contractor shall provide a dedicated electrical circuit to all fire alarm control panels.

1.3.5 MULTIPLE ADDRESSABLE PERIPHERAL NETWORK

1.3.5.1

Communication with addressable devices: The system must provide communication with all initiating and control devices individually. All of these devices are to be individually annunciated at the control panel. Annunciation shall include the following conditions for each point:

a. Alarm
b. Trouble
c. Open
d. Short
e. Ground
f. Device Fail/or Incorrect Device
g. Device Dirty & Almost Dirty (Devices that do not support this feature shall not be considered equal)

1.3.5.2

All addressable devices are to have the capability of being disabled or enabled individually.

1.3.5.3

Up to 500 addressable devices may be multi-dropped from a single pair of wires. Systems that require factory reprogramming to add or delete devices are unacceptable. The system shall be capable of supporting a minimum of 500 addressable points.

1.3.5.4

Each addressable device must be uniquely identified by an address code entered on each device at time of installation. The use of jumpers to set address will not be acceptable due to the potential of vibration and poor contact.

1.4 SUBMITTALS

Government approval is required for submittals with a "GA" designation; submittals having an "FI0" designation are for information only. The following shall be submitted in accordance with Section 01330 SUBMITTAL PROCEDURES:

SD-01 Data

Battery; GA.

Substantiating battery calculations for supervisory and alarm power requirements. Ampere-hour requirements for each system component and each

panel component, and the battery recharging period shall be included.

Voltage Drop; FIO.

Voltage drop calculations for signaling appliance circuits to indicate that sufficient voltage is available for proper appliance operation.

Spare Parts; FIO.

Spare parts data for each different item of material and equipment specified, not later than 1 month prior to the date of beneficial occupancy. Data shall include a complete list of parts and supplies with the current unit prices and source of supply and a list of the parts recommended by the manufacturer to be replaced after 1 year of service.

Qualifications; GA.

Qualifications, with verification of experience and license number, of a Registered Professional Engineer with at least 4 years of current experience in the design of the fire protection and detection systems. This engineer must perform the various specification items required by this section to be performed by a registered Professional Engineer.

SD-04 Drawings

Training; GA.

Lesson plans and training data, in manual format, for the training courses.

SD-08 Statements

Test Procedures; GA.

Detailed test procedures, signed by the Registered Professional Engineer, for the fire detection and alarm system 60 days prior to performing system tests.

SD-09 Reports

Testing; GA.

Test reports in booklet form showing all field tests performed to prove compliance with the specified performance criteria, upon completion and testing of the installed system. Each test report shall document all readings, test results and indicate the final position of controls.

SD-13 Certificates

Equipment; GA.

Certified copies of current approvals or listings issued by UL, FM or other nationally recognized testing laboratory, showing compliance with specified NFPA standards.

Installer; GA.

The Contractor shall provide documentation demonstrating that its fire detection and alarm system installer has been regularly engaged in the installation of fire detection and alarm systems meeting NFPA standards for

a minimum of three years immediately preceding commencement of this contract. Such documentation shall specifically include proof of satisfactory performance on at least three projects similar to that required by these specifications, including the names and telephone numbers of using agency points of contact for each of these projects. Documentation shall indicate the type of each system installed and include a written certificate that each system has performed satisfactorily in the manner specified for a period of not less than 12 months following completion. All such data shall be submitted 30 days prior to commencement of installation for approval of the Contracting Officer. Listing of the installer under "Protective Signaling Services - Local, Auxiliary, Remote Station Proprietary (UUJS)" of UL-04 shall be accepted as equivalent proof of compliance with the foregoing experience requirements.

1.5 DELIVERY AND STORAGE

All equipment delivered and placed in storage shall be stored with protection from the weather, humidity and temperature variation, dirt and dust, and any other contaminants.

PART 2 PRODUCTS

2.1 FIRE ALARM CONTROL PANEL

2.1.1

Where shown on the plans, provide and install a Simplex type 4020 Fire Alarm Control Panel. Construction shall be modular with solid state, microprocessor based electronics. It shall display only those primary controls and displays essential to operation during a fire alarm condition.

A local audible device shall sound during Alarm, Trouble or Supervisory conditions. This audible device shall sound differently during each condition to distinguish one condition from another without having to view the panel.

2.1.2

The Control Panel's display shall be backlit for enhanced readability.

2.1.3

Provide cabinet of sufficient size to accommodate the equipment. The cabinet shall be equipped with locks and transparent door panel providing freedom from tampering yet allowing full view of the various lights and controls.

2.1.4

The panel shall be equipped with a Simplex 4020-6014 network card. The network card shall be configured to connect to the existing campus fire alarm environment via a copper connection. The network card shall report the panel status to the existing Simplex 2120 master control station. The connection between in the 4020 and the 2120 panel shall be a two way communication path with each panel communicating with each other.

2.1.5 Circuit Connections

Circuit conductors entering or leaving the panel shall be connected to

screw-type terminals with each terminal marked for identification.

2.2 STORAGE BATTERIES

Storage Batteries shall be provided and shall be the sealed, lead-calcium type requiring no additional water. The batteries shall have ample capacity, with primary power disconnected, to operate the fire alarm system for a period of 48 hours. Following this period of operation via batteries, the batteries shall have ample capacity to operate all components of the system, including all alarm signaling devices in the total alarm mode for a minimum period of 15 minutes. Batteries shall be sized to deliver 50 percent more ampere/hours based on a 48 hour discharged rate than required for the calculated capacities. Battery cabinet shall be a separate compartment within the control panel. Batteries in the control panel shall be located at the bottom of the panel. Battery shall be provided with overcurrent protection in accordance with NFPA 72.

2.3 BATTERY CHARGER

Battery charger shall be completely automatic, with high/low charging rate, capable of restoring the batteries from full discharge to full charge within 12 hours. A separate ammeter shall be provided for indicating rate of charge. A separate voltmeter shall be provided to indicate the state of the battery charge. A pilot light indicating when batteries are manually placed on a high rate of charge shall be provided as part of the unit assembly if a high rate switch is provided. Charger shall be located in control panel or battery cabinet.

2.4 ADDRESSABLE PULL STATIONS

2.4.1

Addressable, non-coded, double action pull stations shall be SIMPLEX 2099-9761 and will contain electronics that communicate the station's status (alarm, normal) to the control panel over two wires which also provide power to the pull station. The address will be set on each station. The stations will be manufactured from high impact red LEXAN. Lettering will be raised and painted white. The station will mechanically latch upon operation and remain so until manually reset by opening with a key common to all system locks. Pull stations will be single action.

2.4.2

The front of the station is to be hinged to a backplate assembly and must be opened with a key to reset the station. The key shall be common with the control panels. Stations which use Allen wrenches or special tools to reset, will not be accepted. The station shall consist of high impact LEXAN, red in color.

2.4.3

There shall be no limit to the number of stations, detectors, or Zone Adapter Modules, which may be activated or "in alarm" simultaneously.

2.4.4

The addressable manual station shall be Underwriters' Laboratories Inc. listed.

2.5 ADDRESSABLE DEVICE TYPES

2.5.1 General

The system control panel, over its two wire multi-drop channel, must be capable of communicating with the types of addressable devices specified below. Addressable devices will be located as shown on the drawings. All devices will be SIMPLEX “TRUE ALARM” type.

2.5.2 Photoelectric Detector Head

a. The Photoelectric type detector shall be a SIMPLEX 4098-9714

b. Detector shall be compatible with other addressable detectors, addressable manual stations, and addressable Zone Adapter Modules on the same circuit.

c. Units will be able to communicate the following information to the FACP; sensor location, alarm levels, service maintenance messages, service trouble messages.

2.5.3 Addressable Thermal Detector Head

Thermal detector heads shall be a SIMPLEX 4098-9733 plug in unit which mounts to a twist lock base (4098-9792), and shall be UL listed. They will be a combination rate of rise and fixed temperature (135 F) type, automatically restorable.

2.5.4 Addressable Photoelectric Duct Detector

a. The detector shall be a SIMPLEX 4098-9753, non polarized 24VDC type which is compatible with the Fire Alarm Panel and obtains its operating power from the supervisory current in the fire alarm detection loop.

b. Detectors shall be of the solid state photoelectric type and shall operate on the light scattering, photodiode principle.

c. Detector construction shall have a mounting base with a twist lock detecting head that is lockable. The locking feature must be field removable when not required. Contact between the base and head shall be of the bifurcated type utilizing spring type, self-wiping contacts. Removal of the detector head shall interrupt the supervisory current of the fire alarm detection loop and cause a trouble signal at the control panel.

d. A remote test switch shall be furnished for each detector housing. Switch shall be mounted in ceiling below detector.

e. For maintenance purposes, it shall be possible to clean the duct housing sampling tubes by accessing them through the duct housing front cover.

f. Auxiliary SPDT relays and/or remote LED alarm indicators and key operated test stations shall be installed where indicated.

2.5.5 Sprinkler System Monitoring

Zone Adapter Modules shall be used for monitoring of waterflow, and valve tamper.

a. An addressable interface module shall be provided for interfacing normally open direct contact devices to an addressable signaling line circuit. The device shall be a Simplex type Zone Adapter Module (ZAM).

b. ZAM’s will be capable of mounting in a standard electric outlet box. ZAM’s will include cover plates to allow surface or flush mounting. ZAM’s will receive their 24VDC power from a separate two wire pair running from an appropriate power supply.

c. The ZAM shall be supervised and uniquely identified by the control panel. Device identification shall be transmitted to the control panel for processing according to the program instructions. Should the ZAM become non operational, tampered with, or removed, a discrete trouble signal, unique to the device, shall be transmitted to, and annunciated at, the control panel.

d. All devices will be supervised for trouble conditions. The system control panel will be capable of indicating the type of trouble condition (open, short, device missing/failed). Should a device fail, it will not hinder the operation of other system devices. Should a problem occur on a particular wire run, it will not affect other wire runs.

2.6 NOTIFICATION APPLIANCES

Audible appliances shall be heavy duty and conform to the applicable requirements of UL 464. Devices shall be connected into alarm indicating circuits and shall have a separate screw terminal for each conductor. Devices shall have manufacturer's standard finish and color.

2.6.1 Visual Flashing Lamps (Xenon Strobe)

Visual indicating appliances shall be SIMPLEX 4904 comprised of a Xenon flashtube and be entirely solid state. These devices shall be UL listed and be capable of wall mounting. The LEXAN lens shall be pyramidal in shape to allow better visibility. Strobes shall be a minimum of 95CD. All visual only devices shall be red in color. Where more then one strobe is visible, adjacent visuals shall be synchronized with a SIMPLEX sync cube.

2.6.2 Audio/Visual Alarm Indicating Appliances

Audio/Visual units shall be SIMPLEX 4903 and provide a common enclosure for the fire alarm audible and visual alarm devices. The unit shall be complete with a tamper resistant, Pyramidal shaped LEXAN lens with "Fire" lettering visible from a 180 field of view. Integral Xenon strobe shall provide a minimum light output of 95 candela. Unit shall be complete with all mounting hardware. Audio/visual unit shall be UL Listed for its intended purpose. All visual only devices shall be red in color.

2.7 FIRE DETECTION AND ALARM SYSTEM PERIPHERAL EQUIPMENT

2.7.1 Ground Rods

Ground rods shall be of copper clad steel conforming to UL 467 not less than 19 mm (3/4 inch) in diameter by 3 m (10 feet) in length.

2.7.2 Conduit

Conduit and fittings shall comply with UL 6, UL 1242 and UL 797.

2.7.3 Wiring

Wiring for 120V ac power shall be No. 12 AWG minimum. Wiring for low voltage dc circuits shall be No. 16 AWG minimum. Power wiring (over 28 volts) and control wiring shall be isolated. All wiring shall conform to NFPA 70. System field wiring shall be solid copper and installed in metallic conduit or electrical metallic tubing, except rigid plastic conduit may be used under slab-on-grade. All conductors shall be color coded. Conductors used for the same functions shall be similarly color coded. Wiring code color shall remain uniform throughout the circuit. Pigtail or T-tap connections to alarm initiating, supervisory circuits, and alarm indicating circuits are prohibited. T-tapping using screw terminal blocks is allowed for addressable systems.

2.7.4 Special Tools and Spare Parts

Special tools necessary for the maintenance of the equipment shall be furnished. Two spare fuses of each type and size required and five spare lamps and LED's of each type shall be furnished. Two percent of the total number of each different type of detector, but no less than two each, shall be furnished. Fuses and lamps shall be mounted in the fire alarm panel.

PART 3 EXECUTION

3.1 INSTALLATION

All work shall be installed as shown and in accordance with the manufacturer's diagrams and recommendations, unless otherwise specified. Smoke detectors shall not be installed until the building has been thoroughly cleaned.

3.1.1 Power Supply for the System

A single dedicated circuit connection for supplying power to each building fire alarm system shall be provided. The primary power shall be supplied as shown on the drawings. The power supply shall be equipped with a locking mechanism and marked "FIRE ALARM CIRCUIT CONTROL".

3.1.2 Wiring

Conduit size for wiring shall be in accordance with NFPA 70. A looped conduit system shall be used. Wiring for the fire alarm system shall not be installed in conduits, junction boxes, or outlet boxes with conductors of lighting and power systems. No more than one conductor shall be installed under any screw terminal. All circuit conductors entering or leaving any mounting box, outlet box enclosure or cabinet shall be connected to screw terminals with each terminal marked in accordance with the wiring diagram. Connections and splices shall be made using screw terminal blocks. The use of wire nut type connectors are prohibited in the system. Wiring within any control equipment shall be readily accessible without removing any component parts. The fire alarm equipment manufacturer's representative shall be present for the connection of wiring to the control panel.

All junction boxes shall be sprayed red and labeled "Fire Alarm". Wiring color code shall be maintained throughout the installation.

3.1.3 Control Panel

The control panel and its assorted components shall be mounted so that no part of the enclosing cabinet is less than 300 mm nor more than 2 m above the finished floor. All manually operable controls shall be between 900 mm to 1.1 m above the finished floor. Panel shall be installed to comply with the requirements of UL 864.

3.1.4 Detectors

Detectors shall be installed in accordance with NFPA 72. Detectors shall be at least 300 mm from any part of any lighting fixture. Detectors shall be located at least 900 mm from diffusers of air handling systems. Each detector shall be provided with appropriate mounting hardware as required by its mounting location. Detectors which mount in free space shall be mounted directly to the end of the stubbed down rigid conduit drop. Conduit drops shall be firmly secured to minimize detector sway. Where length of conduit drop from ceiling or wall surface exceeds 900 mm, sway bracing shall be provided.

3.1.5 Notification Appliances

Notification appliances shall be mounted a minimum of 2.4 m above the finished floor unless limited by ceiling height or otherwise indicated.

3.2 OVERVOLTAGE AND SURGE PROTECTION

All equipment connected to alternating current circuits shall be protected from surges per IEEE C62.41 and NFPA 70. All cables and conductors which serve as communications links, except fiber optics, shall have surge protection circuits installed at each end. Fuses shall not be used for surge protection.

3.3 GROUNDING

Grounding shall be provided to building ground or ground rods shall be driven. Maximum impedance to ground shall be 25 ohms. Ground rods shall not protrude more than 150 mm above grade.

3.4 TESTING

The Contractor shall notify the Contracting Officer 30 days before the preliminary and acceptance tests are to be conducted. The tests shall be performed in accordance with the approved test procedures in the presence of the Contracting Officer. The control panel manufacturer's representative shall be present to supervise all tests. The Contractor shall furnish all instruments and personnel required for the tests.

3.4.1 Preliminary Tests

Upon completion of the installation, the system shall be subjected to functional and operational performance tests including tests of each installed initiating and notification appliance. Tests shall include the meggering of all system conductors to determine that the system is free from grounded, shorted, or open circuits. The megger test shall be conducted prior to the installation of fire alarm equipment. If

deficiencies are found, corrections shall be made and the system shall be retested to assure that it is functional.

3.4.2 Acceptance Test

Testing shall be in accordance with NFPA 72. The recommended tests in NFPA 72 shall be considered mandatory and shall verify that all previous deficiencies have been corrected. The test shall include the following:

a. Test of each function of the control panel.

b. Test of each circuit in both trouble and normal modes.

c. Tests of alarm initiating devices in both normal and trouble conditions.

d. Tests of each control circuit and device.

e. Tests of each alarm notification appliance.

f. Tests of the battery charger and batteries.

g. Complete operational tests under emergency power supply.

h. Visual inspection of all wiring connections.

i. Opening the circuit at each alarm initiating device and notification appliance to test the wiring supervisory feature.

j. Ground fault

k. Short circuit faults

l. Stray voltage

m. Loop resistance

3.5 TRAINING

Training course shall be provided for the operations and maintenance staff. The course shall be conducted in the building where the system is installed or as designated by the Contracting Officer. The training period shall consist of 1 training day (8 hours per day) and shall start after the system is functionally completed but prior to final acceptance tests. The instructions shall cover all of the items contained in the operating and maintenance instructions.

-- End of Section --