INVITATION FOR BIDS (8A)

MILVAN SUPPORT FACILITY

TOOELE ARMY DEPOT, UTAH

IFB NO. DACA05-98-B-0010
SPECIFICATION NO. 9840
DRAWING FILE NO. 201-25-187

US ARMY CORPS OF ENGINEERS
Sacramento District

PROJECT NO. 044914

DEPARTMENT OF THE ARMY
U.S. ARMY ENGINEER DISTRICT, SACRAMENTO
CORPS OF ENGINEERS
1325 J STREET
SACRAMENTO, CALIFORNIA 95814-2922

REPLY TO
ATTENTION OF

July 6, 1998

Contracting Division

SUBJECT: Required Central Contractor Registration (CCR)

TO: All PROSPECTIVE OFFERORS AND CONTRACTORS

This solicitation incorporates DFARS Clause 252.204-7004, Required Central Contractor Registration. In accordance with this clause, you must be registered in the Department of Defense (DoD) CCR database in order to be eligible for contract award. If you intend to submit an offer for this procurement and are not already registered, you are urged to do so immediately via the Internet. The DOD CCR World Wide Web home page address is: http://ccr.edi.disa.mil. The Defense Logistics Services Center also has a CCR web site at http://www.ccr.dlsc.dla.mil/ which includes an instructional guide.

A "Data Universal Numbering System" (DUNS) number is a mandatory data element for registering. If you do not have a DUNS number, contact Dun and Bradstreet to obtain one at no charge. An offeror within the United States may call 1-800-333-0505. More information about the DUNS number is available from Dun and Bradstreet's Internet home page at http://www.dnb.com/.

A "Commercial and Government Entity" (CAGE) code is another mandatory data element for being registered in the CCR. However, if registration forms from USA companies are submitted without the CAGE code, one will be assigned.

DoD has established a goal of registering an applicant in the CCR database within 48 hours after receipt of a complete and accurate application via the Internet. However, registration of an applicant through a method other than the Internet may take up to 30 days.

Your prompt attention to this matter is vital. Offerors that are not registered should consider applying for registration immediately upon receipt of this solicitation.

Sincerely,

Ruth Anne Ijames
Chief, Contracting Division

TABLE OF CONTENTS

001	COVER SHEET
002	CENTRAL CONTRACTOR REGISTRATION (CCR)
003	TABLE OF CONTENTS
004	DD FORM 1707

SECTION	TITLE
00010	SOLICITATION, OFFER AND AWARD (STANDARD FORM 1442) AND PRICING SCHEDULE (005)
00100	INSTRUCTIONS, CONDITIONS AND NOTICES TO BIDDERS/ OFFERORS AND EVALUATION CRITERIA FOR AWARD
00600	REPRESENTATIONS, CERTIFICATIONS AND OTHER STATEMENTS OF BIDDERS/OFFERORS
00700	CONTRACT CLAUSES
00800	SPECIAL CONTRACT REQUIREMENTS

ATTACHMENTS:

ATCH NO.	
0901	GENERAL WAGE DECISION (ATTACHMENT 1)
0902	DD FORM 2051 (ATTACHMENT 2)
0903	PREAWARD SURVEY (ATTACHMENT 3)
	TECHNICAL SPECIFICATIONS
010	(SEE TECHNICAL SPECIFICATIONS' TABLE OF CONTENTS FOR SPECIFICATION SECTIONS INCLUDED IN THIS SOLICITATION/CONTRACT)
	DRAWINGS (SEPARATE PACKAGE) (LIST OF DRAWINGS-SECTION 00800)

NOTE: AS A MINIMUM ANY CONTRACT AWARDED AS A RESULT OF THIS SOLICITATION SHALL CONSIST OF THE FOLLOWING DOCUMENTS:

STANDARD FORM 1442, SECTIONS 00010, 00700, 00800, TECHNICAL SPECIFICATIONS AND DRAWINGS, AND ATTACHMENTS AS DESCRIBED IN CONTRACT DOCUMENT.

SECTION 00600, AS COMPLETED BY AWARDEE, IS INCORPORATED INTO ANY RESULTANT CONTRACT BY REFERENCE.

SECTION 00100 IS INCLUDED FOR SOLICITATION PURPOSES ONLY. THIS SECTION WILL BE REMOVED, MAINTAINED IN THE CONTRACT FILE AND NOT MADE PART OF THE CONTRACT.

AMENDMENTS ARE INCORPORATED INTO THE RESULTANT CONTRACT.

INFORMATION TO OFFERORS OR BIDDERS

COVER SHEET

1. SOLICITATION NUMBER
DACA05-99-B-0010
Spec. No. 9840

2. *(X one)*

x	a. SEALED BID
	b. NEGOTIATED *(RFP)*
	c. NEGOTIATED *(RFQ)*

INSTRUCTIONS

NOTE THE AFFIRMATIVE ACTION REQUIREMENT OF THE EQUAL OPPORTUNITY CLAUSE WHICH MAY APPLY TO THE CONTRACT RESULTING FROM THIS SOLICITATION.

You are cautioned to note the "Certification of Non-Segregated Facilities" in the solicitation. Failure to agree to the certification will render your reply nonresponsive to the terms of solicitations involving awards of contracts exceeding $25,000 which are not exempt from the provisions of the Equal Opportunity clause.

"Fill-ins" are provided on the face and reverse of Standard Form 1442 or other solicitation documents and Sections of Table of Contents in this solicitation and should be examined for applicability.

See the provision of this solicitation entitled either "Late Bids, Modifications of Bids or Withdrawal of Bids" or "Late Proposals, Modifications of Proposals and Withdrawals of Proposals."

When submitting your reply, the envelope used must be plainly marked with the Solicitation Number, as shown above, and the date and local time set forth for bid opening or receipt of proposals in the solicitation document.

If NO RESPONSE is to be submitted, detach this sheet from the solicitation, complete the information requested on reverse, fold, affix postage, and mail. NO ENVELOPE IS NECESSARY.

Replies must set forth full, accurate, and complete information as required by this solicitation *(including attachments)*. The penalty for making false statements is prescribed in 18 U.S.C. 1001.

3. ISSUING OFFICE *(Complete mailing address, including Zip Code)*
DEPARTMENT OF THE ARMY
U.S. ARMY ENGINEER DISTRICT, SACRAMENTO
CORPS OF ENGINEERS
ATTN: CONTRACTING DIVISION, PLAN ROOM
1325 J STREET
SACRAMENTO, CALIFORNIA 95814-2922

4. ITEMS TO BE PURCHASED *(Brief description)*

SEE SF-1442, BLOCK 10.

TYPE OF CONTRACT: SEE SECTION 00100, FAR CLAUSE 52.216-1

5. PROCUREMENT INFORMATION *(X and complete as applicable)*

	a. THIS PROCUREMENT IS UNRESTRICTED					
x	b. THIS PROCUREMENT IS A 100 % SET-ASIDE FOR ONE OF THE FOLLOWING *(X one)*. (See Section 00700)					(3) Combined Small Business/Labor Area Concerns
	x	(1) Small Business [8(a)]		(2) Labor Surplus Area Concerns		(4) Small Disadvantaged Business Concerns

6. ADDITIONAL INFORMATION

COMPLETE DETAILS FOR PROPER SUBMISSION OF BIDS ARE FOUND IN SECTIONS 00100, 00600 AND ATTACHMENTS. REMINDER: ACKNOWLEDGE ALL AMENDMENTS (FILL IN BACK PAGE OF SF-1442 OR RETURN SIGNED COPY OF SF-30). IF ANY OF THE AMENDMENTS FURNISHED AMENDED PAGES WHICH ARE PART OF THE BID, THE AMENDED PAGES MUST BE USED IN THE BID.

BID WILL INCLUDE:

A. COMPLETED AND SIGNED SF-1442 (SECTION 00010)
B. COMPLETED PRICING SCHEDULE (SECTION 00010)
C. COMPLETED REPRESENTATIONS / CERTIFICATIONS (SECTION 00600)
D. DD FORM 2051, CAGE CODE (SEE SECTION 00100, DFARS 252.204-7001, AND ATTACHMENTS). COMPLETE AND SUBMIT IF YOU DO NOT HAVE A CAGE CODE)
E. ACKNOWLEDGEMENT OF AMENDMENTS, IF ANY AMENDMENTS WERE ISSUED
F. ANY OTHER DOCUMENTS REQUIRED BY THE SOLICITATION (SEE ATTACHMENTS SECTION)

7. POINT OF CONTACT FOR INFORMATION

a. NAME (Last, First, Middle Initial) SEE SECTION 00100	b. ADDRESS *(Include Zip Code)*
c. TELEPHONE NUMBER *(Include Area Code and Extension) (NO COLLECT CALLS)* SEE SECTION 00100	SAME AS BLOCK 3 ABOVE

8. REASONS FOR NO RESPONSE *(X all that apply)*			
	a. CANNOT COMPLY WITH SPECIFICATIONS		b. CANNOT MEET DELIVERY REQUIREMENT
	c. UNABLE TO IDENTIFY THE ITEM(S)		d. DO NOT REGULARLY MANUFACTURE OR SELL THE TYPE OF ITEMS INVOLVED
	e. OTHER *(Specify)*		

9. MAILING LIST INFORMATION *(X one)*				
	YES		NO	WE DESIRE TO BE RETAINED ON THE MAILING LIST FOR FUTURE PROCUREMENT OF THE TYPE OF ITEM(S) INVOLVED.

10. RESPONDING FIRM	
a. COMPANY NAME	b. ADDRESS *(Include Zip Code)*

c. ACTION OFFICER			
(1) Typed or Printed Name *(Last, First, Middle Initial)*	(2) Title	(3) Signature	(4) Date Signed *(YYMMDD)*

DD Form 1707 Reverse, MAR 89

FOLD *FOLD*

FOLD *FOLD*

FROM

AFFIX
STAMP
HERE

SOLICITATION NUMBER	
DATE *(YYMMDD)*	LOCAL TIME

TO

DEPARTMENT OF THE ARMY
U.S. ARMY ENGINEER DISTRICT, SACRAMENTO
CORPS OF ENGINEERS
ATTN: CONTRACTING DIVISION, PLAN ROOM
1325 J STREET
SACRAMENTO, CA 95814-2922

SECTION 00010

SOLICITATION, OFFER AND AWARD (STANDARD FORM 1442) AND PRICING SCHEDULE

SOLICITATION, OFFER, AND AWARD (Construction, Alteration, or Repair)	1. SOLICITATION NO.	2. TYPE OF SOLICITATION	3. DATE ISSUED	PAGE OF PAGES
	DACA05-99-B-0010	[X] SEALED BID (IFB) [ ] NEGOTIATED (RFP)	99 FEB 16	1

IMPORTANT - The "offer" section on the reverse must be fully completed by offeror.

4. CONTRACT NO.	5. REQUISITION/PURCHASE REQUEST NO.	6. PROJECT NO.

7. ISSUED BY CODE

DEPARTMENT OF THE ARMY
U.S. ARMY ENGINEER DISTRICT, SACRAMENTO
CORPS OF ENGINEERS
1325 J STREET
SACRAMENTO, CALIFORNIA 95814-2922

8. ADDRESS OFFER TO

DEPARTMENT OF THE ARMY
U.S. ARMY ENGINEER DISTRICT, SACRAMENTO
UTAH AREA OFFICE
7227 6TH STREET, BUILDING 366
HILL AIR FORCE BASE, UTAH 84056-5214

9. FOR INFORMATION CALL:	A. NAME	B. TELEPHONE NO. (Include area code) (NO COLLECT CALLS)
	See SECTION 00100	See SECTION 00100

SOLICITATION

NOTE: In sealed bid solicitations, "offer" and "offeror" mean "bid" and "bidder".

10. THE GOVERNMENT REQUIRES PERFORMANCE OF THE WORK DESCRIBED IN THESE DOCUMENTS (Title, identifying no., date):

MILVAN SUPPORT FACILITY
TOOELE ARMY DEPOT, UTAH

Specification No. 9840

Description: CONSTRUCTION OF AMMUNITION CONTAINERIZATION COMPLEX ADJACENT TO RAILROAD LINES. WORK INCLUDES CONSTRUCTION OF CONCRETE CONTAINER RECEIVING/TRANSFER SLABS ON GRADE, TWO METAL DUNNAGE BUILDINGS, ONE METAL CONTAINER REPAIR BUILDING, DEMOLITION OF EXISTING PAVEMENT AND NEW PAVEMENT INSTALLATION, DEMOLITION OF BUILDING 71 SM, CURBS/GUTTERS, SITE LIGHTING AND WATER, ONE TON AIR CONDITIONING SYSTEM.

RESPONDERS ARE ADVISED THAT THIS PROJECT MAY BE DELAYED, CANCELED OR REVISED AT ANY TIME DURING THE SOLICITATION, SELECTION, EVALUATION, NEGOTIATION AND/OR FINAL AWARD PROCESS.

Estimated Cost Range of Project: $1,000,000 - 5,000,000

NOTE: THIS PROJECT IS LIMITED TO 8A CONTRACTORS WHOSE APPROVED BUSINESS PLAN IS ON FILE WITH THE SBA UTAH DISTRICT OFFICE AND HAVE SIC CODE 1542 INCLUDED IN THEIR APPROVED SIC CODES. ALL OTHER FIRMS ARE DEEMED INELIGIBLE TO SUBMIT OFFERS.

11. The Contractor shall begin performance within 10 calendar days and complete it within 270 calendar days after receiving [ ] award, [X] notice to proceed. This performance period is [X] mandatory, [ ] negotiable (See SECTION 00800, FAR 52.211-10 .)

12A. THE CONTRACTOR MUST FURNISH ANY REQUIRED PERFORMANCE AND PAYMENT BONDS? (If "YES," indicate within how many calendar days after award in Item 12B.)	12B. CALENDAR DAYS
[X] YES [ ] NO	Ten (10)

13. ADDITIONAL SOLICITATION REQUIREMENTS:

A. Sealed offers in original and O copies to perform the work required are due at the place specified in Item 8 by 2:00 PM (hour) local time, 99 MAR 18 (date). If this is a sealed bid solicitation, offers will be publicly opened at that time. Sealed envelopes containing offers shall be marked to show the offeror's name and address, the solicitation number, and the date and time offers are due.

B. An offer guarantee [X] is, [ ] is not required.

C. All offers are subject to the (1) work requirements, and (2) other provisions and clauses incorporated in the solicitation in full text or by reference.

D. Offers providing less than 60 calendar days for Government acceptance after the date offers are due will not be considered and will be rejected.

OFFER *(Must be fully completed by offeror)*

14. NAME AND ADDRESS OF OFFEROR *(Include ZIP Code)*

15. TELEPHONE NO. *(Include area code)*
( ) FAX ( )

16. REMITTANCE ADDRESS *(Include only if different than Item 14)*

DUNS:_____ CAGE CODE:_____
CODE FACILITY CODE

17. The offeror agrees to perform the work required at the prices specified below in strict accordance with the terms of this solicitation, if this offer is accepted by the Government in writing within _____ calendar days after the date offers are due. *(Insert any number equal to or greater than the minimum requirement stated in Item 13D. Failure to insert any number means the offeror accepts the minimum in Item 13D.)*

AMOUNTS ▶ See Pricing Schedule

18. The offeror agrees to furnish any required performance and payment bonds.

19. ACKNOWLEDGEMENT OF AMENDMENTS
(The offeror acknowledges receipt of amendments to the solicitation - give number and date of each)

AMENDMENT NO.										
DATE										

20A. NAME AND TITLE OF PERSON AUTHORIZED TO SIGN OFFER *(Type or print)*

20B. SIGNATURE

20C. OFFER DATE

AWARD *(To be completed by Government)*

See pg. 3 for 20D

21. ITEMS ACCEPTED:

22. AMOUNT

23. ACCOUNTING AND APPROPRIATION DATA

24. SUBMIT INVOICES TO ADDRESS SHOWN IN ▶ ITEM
(4 copies unless otherwise specified)

25. OTHER THAN FULL AND OPEN COMPETITION PURSUANT TO
☐ 10 U.S.C. 2304(c) ( ) ☐ 41 U.S.C. 253(c) ( )

26. ADMINISTERED BY CODE

27. PAYMENT WILL BE MADE BY

CONTRACTING OFFICER WILL COMPLETE ITEM 28 OR 29 AS APPLICABLE

☐ 28. NEGOTIATED AGREEMENT *(Contractor is required to sign this document and return _____ copies to issuing office.)* Contractor agrees to furnish and deliver all items or perform all work requirements identified on this form and any continuation sheets for the consideration stated in this contract. The rights and obligations of the parties to this contract shall be governed by (a) this contract award, (b) the solicitation, and (c) the clauses, representations, certifications, and specifications incorporated by reference in or attached to this contract.

☐ 29. AWARD *(Contractor is not required to sign this document.)* Your offer on this solicitation is hereby accepted as to the items listed. This award consummates the contract, which consists of (a) the Government solicitation and your offer, and (b) this contract award. No further contractual document is necessary.

30A. NAME AND TITLE OF CONTRACTOR OR PERSON AUTHORIZED TO SIGN *(Type or Print)*

31A. NAME OF CONTRACTING OFFICER *(Type or Print)*

30B. SIGNATURE

30C. DATE

31B. UNITED STATES OF AMERICA
BY

31C. AWARD DATE

BLOCK 20D:

(1) IF THE OFFEROR IS A JOINT VENTURE, EACH PARTICIPANT IN THE JOINT VENTURE MUST COMPLETE THE FOLLOWING:

Company Name	Signature	Title
Company Name	Signature	Title
Company Name	Signature	Title

NOTE: If a corporation is participating as a member of a Joint Venture, the certificate below must also be completed and signed.

CORPORATION AUTHORIZATION TO PARTICIPATE IN JOINT VENTURE CERTIFICATE

I, _____, certify that I am the Secretary of the corporation
(name)
named as a participant in a Joint Venture on this offer; that
_____, who signed said offer on behalf of the corporation, was
(name)
then _____ of said corporation; that the signature thereto is
(title)
genuine; that said contract was duly signed, sealed and attested for and in behalf of said corporation by authority of its governing body; and that the corporation is authorized to participate in the Joint Venture on this offer.

_____
(Name of Corporation)

_____
(Secretary)

(2) IF THE OFFEROR IS A PARTNERSHIP, LIST FULL NAME OF ALL PARTNERS BELOW. SIGNATURES BY ALL PARTNERS HERE SIGNIFY THAT THE INDIVIDUAL WHO SIGNED THE OFFER IN BLOCK 20B HAS THE AUTHORITY TO BIND THE PARTNERSHIP.

Name	Signature
Name	Signature
Name	Signature

(3) IF THE OFFEROR IS A CORPORATION, THE OFFER SHALL BE SIGNED IN THE CORPORATE NAME FOLLOWED BY THE WORD "BY" AND THE SIGNATURE OF THE PERSON AUTHORIZED TO SIGN THE OFFER IN BLOCK 20B. PROVIDE PROOF THAT THE PERSON SIGNING FOR THE CORPORATION HAS THE AUTHORITY TO BIND THE CORPORATION BY COMPLETING THE FOLLOWING CERTIFICATE:

CORPORATION AUTHORIZATION CERTIFICATE

I, _____, certify that I am the Secretary of the
(name)
corporation named as offeror in the within offer; that _____,
(name)
who signed said offer on behalf of the corporation, was then

_____ of said corporation, that the signature
(title)
thereto is genuine; that said contract was duly signed, sealed and attested for in behalf of said corporation by authority of its governing body.

_____
(Name of Corporation)

_____
(Secretary)

(4) IF THE OFFEROR IS AN INDIVIDUAL DOING BUSINESS AS A FIRM, THE OFFER SHALL BE SIGNED BY THAT INDIVIDUAL IN BLOCK 20B FOLLOWED BY THE WORDS "AN INDIVIDUAL DOING BUSINESS AS _____ (INSERT NAME OF FIRM).

(5) WHEN AN AGENT SIGNS THE OFFER, PROVIDE PROOF OF THE AGENT'S AUTHORITY TO BIND THE PRINCIPAL.

PRICING SCHEDULE

CONTRACTOR SHALL FURNISH ALL PLANT, LABOR, MATERIAL, EQUIPMENT, ETC. NECESSARY TO PERFORM ALL WORK IN STRICT ACCORDANCE WITH THE TERMS AND CONDITIONS SET FORTH IN THE CONTRACT TO INCLUDE ALL ATTACHMENTS THERETO.

ITEM NO.	DESCRIPTION	AMOUNT
0001	MILVAN SUPPORT FACILITIES, COMPLETE	$_____

NOTE: Bidders/offerors shall insert either figures or words, but not both.

SECTION 00100

INSTRUCTIONS, CONDITIONS AND NOTICES TO BIDDERS/OFFERORS AND EVALUATION CRITERIA FOR AWARD

SECTION 00100

INSTRUCTIONS, CONDITIONS AND NOTICES TO BIDDERS/OFFERORS
AND EVALUATION CRITERIA FOR AWARD

INDEX

INSTRUCTIONS, CONDITIONS AND NOTICES TO BIDDERS/OFFERORS:

1.	SAACONS 52.0214-4581	INQUIRIES (APR 1992)
2.	SAACONS 52.0214-4582	DIRECTIONS FOR SUBMITTING BIDS/PROPOSALS (APR 1992)
3.	FAR 52.236-27	SITE VISIT (CONSTRUCTION) (FEB 1995), ALTERNATE I (FEB 1995)
4.	FAR 52.204-6	DATA UNIVERSAL NUMBERING SYSTEM (DUNS) NUMBER (APR 1998)
5.	DFARS 252.204-7001	COMMERCIAL AND GOVERNMENT ENTITY (CAGE) CODE REPORTING (DEC 1991)
6.	SAACONS 52.0209-4501	CONTRACTOR RESPONSIBILITY, PREAWARD SURVEY (JUL 1995)
7.	FAR 52.211-1	AVAILABILITY OF SPECIFICATIONS LISTED IN THE GSA INDEX OF FEDERAL SPECIFICATIONS, STANDARDS AND COMMERCIAL ITEM DESCRIPTIONS, FPMR PART 101-29 (AUG 1998)
8.	FAR 52.211-2	AVAILABILITY OF SPECIFICATIONS LISTED IN THE DOD INDEX OF SPECIFICATIONS AND STANDARDS (DODISS) AND DESCRIPTIONS LISTED IN THE ACQUISITION MANAGEMENT SYSTEMS AND DATA REQUIREMENTS CONTROL LIST, DOD 5010.12-L (AUG 1998)
9.	FAR 52.211-14	NOTICE OF PRIORITY RATING FOR NATIONAL DEFENSE USE (SEP 1990)
10.	DFARS 252.211-7002	AVAILABILITY FOR EXAMINATION OF SPECIFICATIONS, STANDARDS, PLANS, DRAWINGS, DATA ITEM DESCRIPTIONS, AND OTHER PERTINENT DOCUMENTS (DEC 1991)
11.	DFARS 252.211-7003	BRAND NAME OR EQUAL (DEC 1991)
12.	SAACONS 52.0211-4805	AVAILABILITY OF CORPS OF ENGINEERS PUBLICATIONS DESCRIPTIONS (AUG 1998)
13.	FAR 52.214-1	SOLICITATION DEFINITIONS--SEALED BIDDING (JUL 1987)
14.	FAR 52.214-3	AMENDMENTS TO INVITATIONS FOR BIDS (DEC 1989)
15.	FAR 52.214-4	FALSE STATEMENTS IN BIDS (APR 1984)
16.	FAR 52.214-5	SUBMISSION OF BIDS (MAR 1997)
17.	FAR 52.214-6	EXPLANATION TO PROSPECTIVE BIDDERS (APR 1984)
18.	FAR 52.214-7	LATE SUBMISSIONS, MODIFICATIONS, AND WITHDRAWALS OF BIDS (MAY 1997)
19.	FAR 52.214-18	PREPARATION OF BIDS--CONSTRUCTION (APR 1984)
20.	FAR 52.214-19	CONTRACT AWARD--SEALED BIDDING--CONSTRUCTION (AUG 1996)
21.	SAACONS 52.0214-4583	TELEGRAPHIC BIDS/OFFERS (APR 1992)
22.	SAACONS 52.0214-4584	FACSIMILE BIDS/OFFERS (APR 1992)
23.	FAR 52.216-1	TYPE OF CONTRACT (APR 1984)

24.	FAR 52.222-23	NOTICE OF REQUIREMENT FOR AFFIRMATIVE ACTION TO ENSURE EQUAL EMPLOYMENT OPPORTUNITY (APR 1984)
25.	FAR 52.225-12	NOTICE OF BUY AMERICAN ACT REQUIREMENT--CONSTRUCTION MATERIALS (MAY 1997) ALTERNATE I (MAY 1997)
26.	SAACONS 52.0228-4504	PERFORMANCE AND PAYMENT BONDS (AUG 1991)
27.	SAACONS 52.0228-4506	INDIVIDUAL SURETIES IN SUPPORT OF BID BONDS (AUG 1991)
28.	SAACONS 52.228-4507	BID GUARANTEE FORM AND AMOUNT (JAN 1993)
29.	DFARS 252.228-7004	BONDS OR OTHER SECURITY (DEC 1991)
30.	FAR 52.233-2	SERVICE OF PROTEST (AUG 1996)
31.	SAACONS 52.0236-4507	ACCEPTANCE OF OFFERS (AUG 1991)
32.	FAR 52.252-3	ALTERATIONS IN SOLICITATION (APR 1984)
33.	FAR 52.252-5	AUTHORIZED DEVIATIONS IN PROVISIONS (APR 1984)

EVALUATION CRITERIA FOR AWARD:

34.	SAACONS 52.0214-4503	EVALUATION FOR AWARD (JAN 1991)

SECTION 00100

INSTRUCTIONS, CONDITIONS AND NOTICES TO BIDDERS/OFFERORS AND EVALUATION CRITERIA FOR AWARD

INSTRUCTIONS, CONDITIONS AND NOTICES TO BIDDERS/OFFERORS :

1. SAACONS 52.0214-4581 INQUIRIES (APR 1992)

Perspective bidders/offerors should submit inquiries related to this solicitation by writing or calling the following (collect calls will not be accepted):

(1) For information related to amendments and information on bid opening dates or dates set for receipt of proposals:

Plan Room Fax (916) 557-7842

(2) For inquiries of a contractual nature (solicitation requirements, interpretation of contractual language) call:

Ms. Loretta Richmond, Contract Specialist (916) 557-5241
or fax questions to (916) 557-7854.

For bid results only call (916) 557-5237. This phone line is dedicated to Government-recorded bid results; it is an unattended number and messages left may not be answered. If this number has no bid information, call the Contract Specialist above.

(3) All **technical** questions on the specifications or drawings will be submitted in writing (or faxed) to:

Department of the Army
U.S. Army Engineer District, Sacramento
Corps of Engineers
ATTN: Contracting Division
1325 J Street
Sacramento CA 95814-2922
FAX: (916) 557-7854

(4) Please include the solicitation number, project title and location of project with your questions. Written inquiries must be received by this office not later than 14 calendar days prior to bid opening date/date set for receipt of offers.

(5) For prospective bidders with electronic mail capabilities, questions of a contractual or technical nature can be sent to **lrichmond@spk.usace.army.mil**. Please include the full name of your company, as well as telephone and fax numbers, in your correspondence.

(6) Oral explanations or instructions are not binding. Any information given to a bidder/offeror which impacts the bid/offer will be given in the form of a written amendment to the solicitation.

2. SAACONS 52.0214-4582 DIRECTIONS FOR SUBMITTING BIDS/PROPOSALS (APR 1992)

Envelopes containing bids/offers must be sealed, marked and addressed as follows:

MARK ENVELOPES:

Solicitation No. DACA05-99-B-0010
Bid Opening/Offer Closing Date: 99 MAR 18
Bid Opening/Offer Closing Time: 2:00 PM (LOCAL TIME)

ADDRESS ENVELOPES TO:

U.S. Army Engineer District, Sacramento
Utah Area Office
7227 6th Street, Bldg. 366
Hill Air Force Base, Utah 84056-5214

Handcarried bids shall be deposited with the Corps of Engineers at the above address prior to bid opening time. For bidders planning to handcarry bids to Hill AFB for the Bid Opening, be sure to plan your time sufficiently. It may take at least 45 minutes to process you through the Visitors' Center to allow entry onto the base. There are Visitors' Centers located at the South and West Gates of the base. Be sure to bring: (1) a valid driver's license, (2) a valid car registration, and (3) proof of insurance. If you do not have all of these documents, you will not be allowed entry onto the base. If the Visitors' Center requires you to have authorization from a Corps of Engineers employee, call (801) 777-2206 or (801) 825-1505.

3. FAR 52.236-27 SITE VISIT (CONSTRUCTION) (FEB 1995), ALTERNATE I (FEB 1995)

(a) The clauses at 52.236-2, Differing Site Conditions, and 52.236-3, Site Investigations and Conditions Affecting the Work, will be included in any contract awarded as a result of this solicitation. Accordingly, offerors or quoters are urged and expected to inspect the site where the work will be performed.

(b) An organized site visit has been schedule for--
Date & Time: 99 MAR 03 @ 9:00 A.M.

(c) Participants will meet at--
Location:
Outside and north of the main gate. Participants will need to submit their name, business, SSAN, and if they are a foreign national by 9:00 A.M. 99 MAR 1. Note, foreign nationals may require more time to receive clearance. (801)777-2200 x-3.

4. FAR 52.204-6 DATA UNIVERSAL NUMBERING SYSTEM (DUNS) NUMBER (APR 1998)

(a) The offeror shall enter, in the block with its name and address on the cover page of its offer, the annotation "DUNS" followed by the DUNS number that identifies the offeror's name and address exactly as stated in the offer. The DUNS number is a nine-digit number assigned by Dun and Bradstreet Information Services.

(b) If the offeror does not have a DUNS number, it should contact Dun and Bradstreet directly to obtain one. A DUNS number will be provided immediately by telephone at no charge to the offeror. For information on obtaining a DUNS number, the offeror, if located within the United States, should call Dun and

Bradstreet at 1-800-333-0505. The offeror should be prepared to provide the following information:

(1) Company name.
(2) Company address.
(3) Company telephone number.
(4) Line of business.
(5) Chief executive officer/key manager.
(6) Date the company was started.
(7) Number of people employed by the company.
(8) Company affiliation.

(c) Offerors located outside the United States may obtain the location and phone number of the local Dun and Bradstreet Information Services office from the Internet home page at http://www.dnb.com/. If an offeror is unable to locate a local service center, it may send an e-mail to Dun and Bradstreet at globalinfo@mail.dnb.com.

5. DFARS 252.204-7001 COMMERCIAL AND GOVERNMENT ENTITY (CAGE) CODE REPORTING (DEC 1991)

(a) The Offeror is requested to enter its CAGE code on its offer in the block with its name and address. The CAGE code entered must be for that name and address. Enter CAGE before the number.

(b) If the Offeror does not have a CAGE code, it may ask the Contracting Officer to request one from the Defense Logistics Services Center (DLSC). The Contracting Officer will--

(1) Ask the Contractor to complete section B of a DD Form 2051, Request for Assignment of a Commercial and Government Entity (CAGE) Code;
(2) Complete section A and forward the form to DLSC; and
(3) Notify the Contractor of its assigned CAGE code.

(c) Do not delay submission of the offer pending receipt of a CAGE code.

6. SAACONS 52.0209-4501 CONTRACTOR RESPONSIBILITY, PREAWARD SURVEY (JUL 1995)

In order to determine a contractor's responsibility for purposes of contract award in accordance with FAR Part 9, the contractor is required to provide a statement regarding previous experience and past performance in performing comparable work, information related to the business organization, financial resources, and/or plant to be used in performing the work (see Attachments, Preaward Survey). The Preaward Survey is attached to the solicitation for information purposes only. It will be required from only the low bidder. After the Bid Opening, the Government will request this information from the low bidder if the low bidder has not had a contract with the **Sacramento District** within the last twelve months and the Government will set a due date for its submission. The Preaward Survey is not required as part of the bid package. In order to be determined to be responsible a prospective contractor must:

a. Have adequate financial resources to perform the contract or the ability to obtain them.

b. Be able to comply with the required or proposed delivery or performance schedule, taking into consideration all existing commercial and governmental business commitments.

c. Have a satisfactory performance record. In making the determination of responsibility, the Government Contracting Officer shall consider relevant past performance information. A prospective contractor shall not be determined responsible or nonresponsible solely on the basis of a lack of relevant performance history except when there are special standards set forth in the solicitation which applies to all bidders that must be met in order to

receive the award. These special standards may be necessary when unusual expertise or specialized facilities are necessary in the performance of the contract; therefore, in order to be determined to be responsible for that particular contract, the offeror must be able to meet those special standards. A prospective contractor that is or recently has been seriously deficient in contract performance shall be presumed to be nonresponsible unless the Contracting Officer determines that the circumstances were beyond the contractor's control or that the contractor has taken appropriate corrective action. Other responsibility considerations by the Contracting Officer will include past efforts by the contractor to apply sufficient tenacity and perseverance to perform acceptably, to meet quality requirements of contracts, and the contractor's past compliance with subcontracting plans (if required) under recent contracts.

d. Have a satisfactory record of integrity and business ethics.

e. Have the necessary organization, experience, accounting and operational controls, and technical skills, or the ability to obtain them (including, as appropriate, such elements as production control procedures, property control systems, quality assurance measures, and safety programs applicable to materials to be produced or services to be performed by the prospective contractor and subcontractors).

f. Have the necessary production, construction, and technical equipment and facilities, or the ability to obtain them.

g. Be otherwise qualified and eligible to receive an award under applicable laws and regulations.

If the contractor or subcontractor does not already have sufficient resources demonstrated in the completed Preaward Survey, acceptable evidence of "the ability to obtain" the required, adequate resources (all of the resources discussed in subparagraphs a, e, and f above) normally consists of a commitment or explicit arrangement that will be in existence at the time of contract award to rent, purchase or otherwise acquire the needed facilities, equipment, other resources, or personnel.

7. FAR 52.211-1 AVAILABILITY OF SPECIFICATIONS LISTED IN THE GSA INDEX OF FEDERAL SPECIFICATIONS, STANDARDS AND COMMERCIAL ITEM DESCRIPTIONS, FPMR PART 101-29 (AUG 1998)

(a) The GSA Index of Federal Specifications, Standards and Commercial Item Descriptions, FPMR Part 101-29, and copies of specifications, standards, and commercial item descriptions cited in this solicitation may be obtained for a fee by submitting a request to--

General Services Administration
Federal Supply Service
Specifications Section, Suite 8100
470 East L'Enfant Plaza, SW
Washington, DC 20407
Telephone (202) 619-8925
Facsimile (202) 619-8978.

(b) If the General Services Administration, Department of Agriculture, or Department of Veterans Affairs issued this solicitation, a single copy of specifications, standards, and commercial item descriptions cited in this solicitation may be obtained free of charge by submitting a request to the addressee in paragraph (a) of this provision. Additional copies will be issued for a fee.

8. FAR 52.211-2 AVAILABILITY OF SPECIFICATIONS LISTED IN THE DOD INDEX OF SPECIFICATIONS AND STANDARDS (DODISS) AND DESCRIPTIONS LISTED IN THE ACQUISITION MANAGEMENT SYSTEMS AND DATA REQUIREMENTS CONTROL LIST, DOD 5010.12-L (AUG 1998)

(a) Copies of specifications, standards, and data item descriptions cited in this solicitation may be obtained for a fee by submitting a request to the--

Department of Defense Single Stock Point (DoDSSP)
Building 4, Section D
700 Robbins Avenue
Philadelphia, PA 19111-5094
Telephone (215) 697-2667/2179
Facsimile (215) 697-1462.

(b) Order forms, pricing information, and customer support information may be obtained--
(1) By telephone at (215) 697-2667/2179; or
(2) Through the DoDSSP Internet site at http://www.dodssp.daps.mil.

9. FAR 52.211-14 NOTICE OF PRIORITY RATING FOR NATIONAL DEFENSE USE (SEP 1990)

Any contract awarded as a result of this solicitation will be ( ) DX rated order; (X) DO rated order certified for national defense use under the Defense Priorities and Allocations System (DPAS) (15 CFR Part 700), and the Contractor will be required to follow all of the requirements of this regulation.

10. DFARS 252.211-7002 AVAILABILITY FOR EXAMINATION OF SPECIFICATIONS, STANDARDS, PLANS, DRAWINGS, DATA ITEM DESCRIPTIONS, AND OTHER PERTINENT DOCUMENTS (DEC 1991)

The specifications, standards, plans, drawings, data item descriptions, and other pertinent documents cited in this solicitation are not available for distribution but may be examined at the following location:

US Army Engineer District, Sacramento
Plan Room
1325 J Street
Sacramento CA 95814-2922

11. DFARS 252.211-7003 BRAND NAME OR EQUAL (DEC 1991)

(a) If items in this solicitation are identified as "brand name or equal," the term is intended to be descriptive not restrictive. The "brand name or equal" description is used to portray the characteristics and level of quality that will satisfy the Government's needs. The salient physical, functional, and other characteristics which "equal" products must meet are specified in the solicitation.
(b) To be considered for award, offers of "equal" products, including products (other than the "brand name" item) of the brand name manufacturer, must--
(1) Meet the salient physical, functional, and other characteristics specified in this solicitation;

(2) Clearly identify the item by--
(i) Brand name, if any; and
(ii) Make or model number;
(3) Include descriptive literature such as cuts, illustrations, drawings, or a clear reference to previously furnished descriptive data or information available to the Contracting Officer; and
(4) Clearly describe any modifications the Offeror plans to make in a product to make it conform to the solicitation requirements. Mark any descriptive material to clearly show the modifications.
(c) The Contracting Officer will evaluate "equal" products on the basis of information furnished by the Offeror or identified in the offer and reasonably available to the Contracting Officer. The Contracting Officer is not responsible for locating or securing any information not identified in the offer and reasonably available.
(d) Unless the Offeror clearly indicates in the offer that the product being offered is an "equal" product, the Contracting Officer will consider the offer as offering a brand name product referenced in the solicitation.

12. SAACONS 52.0211-4805 AVAILABILITY OF CORPS OF ENGINEERS PUBLICATIONS DESCRIPTIONS (AUG 1998)

a. Corps of Engineers publications are available for inspection at the following location:

U.S. Army Corps of Engineers, Sacramento District
1325 J Street
Engineering Division, District Library, 8th Floor
Sacramento, CA 95814-2922
Telephone Number (916) 557-6657

b. Construction Criteria Base (CCB). The Construction Criteria Base (CCB) system available through the National Institute of Building Sciences includes copies of Corps of Engineers methods and specifications. Documents that are available from this or other such sources will no longer be available directly from the Corps and should be obtained from those sources. Information about the CCB and ordering instructions can be obtained from:

National Institute of Building Sciences
1090 Vermont Ave., NW, Suite 700
Washington, D.C. 20005
Phone: 202/289-7800 (ask for CCB Information)

c. The Corps of Engineers manual, EM 385-1-1, Safety and Health Requirements Manual, is available on the Internet at the following location: http://www.usace.army.mil/inet/usace-docs/eng-manuals/em385-1-1/.

13. FAR 52.214-1 SOLICITATION DEFINITIONS--SEALED BIDDING (JUL 1987)

"Government" means United States Government.
"Offer" means "bid" in sealed bidding.
"Solicitation" means an invitation for bids in sealed bidding.

14. FAR 52.214-3 AMENDMENTS TO INVITATIONS FOR BIDS (DEC 1989)

(a) If this solicitation is amended, then all terms and conditions which are not modified remain unchanged.

(b) Bidders shall acknowledge receipt of any amendment to this solicitation (1) by signing and returning the amendment, (2) by identifying the amendment number and date in the space provided for this purpose on the form for submitting a bid, (3) by letter or telegram, or (4) by facsimile, if facsimile bids are authorized in the solicitation. The Government must receive the acknowledgment by the time and at the place specified for receipt of bids.

15. FAR 52.214-4 FALSE STATEMENTS IN BIDS (APR 1984)

Bidders must provide full, accurate, and complete information as required by this solicitation and its attachments. The penalty for making false statements in bids is prescribed in 18 U.S.C. 1001.

16. FAR 52.214-5 SUBMISSION OF BIDS (MAR 1997)

(a) Bids and bid modifications shall be submitted in sealed envelopes or packages (unless submitted by electronic means)--

(1) Addressed to the office specified in the solicitation; and
(2) Showing the time and date specified for receipt, the solicitation number, and the name and address of the bidder.
(b) Bidders using commercial carrier services shall ensure that the bid is addressed and marked on the outermost envelope or wrapper as prescribed in subparagraphs (a)(1) and (2) of this provision when delivered to the office specified in the solicitation.
(c) Telegraphic bids will not be considered unless authorized by the solicitation; however, bids may be modified or withdrawn by written or telegraphic notice.
(d) Facsimile bids, modifications, or withdrawals, will not be considered unless authorized by the solicitation.
(e) Bids submitted by electronic commerce shall be considered only if the electronic commerce method was specifically stipulated or permitted by the solicitation.

17. FAR 52.214-6 EXPLANATION TO PROSPECTIVE BIDDERS (APR 1984)

Any prospective bidder desiring an explanation or interpretation of the solicitation, drawings, specifications, etc., must request it in writing soon enough to allow a reply to reach all prospective bidders before the submission of their bids. Oral explanations or instructions given before the award of a contract will not be binding. Any information given a prospective bidder concerning a solicitation will be furnished promptly to all other prospective bidders as an amendment to the solicitation, if that information is necessary in submitting bids or if the lack of it would be prejudicial to other prospective bidders.

18. FAR 52.214-7 LATE SUBMISSIONS, MODIFICATIONS, AND WITHDRAWALS OF BIDS (MAY 1997)

(a) Any bid received at the office designated in the solicitation after the exact time specified for receipt will not be considered unless it is received before award is made and it--
(1) Was sent by registered or certified mail not later than the fifth calendar day before the date specified for receipt of bids (*e.g.,* a bid submitted in response to a solicitation requiring receipt of bids by the 20th of the month must have been mailed by the 15th);
(2) Was sent by mail (or telegram or facsimile, if authorized) or hand-carried (including delivery by a commercial carrier) if it is determined

by the Government that the late receipt was due primarily to Government mishandling after receipt at the Government installation;

(3) Was sent by U.S. Postal Service Express Mail Next Day Service-Post Office To Addressee, not later than 5:00 p.m. at the place of mailing two working days prior to the date specified for receipt of bids. The term "working days" excludes weekends and U.S. Federal holidays; or

(4) Was transmitted through an electronic commerce method authorized by the solicitation and was received at the initial point of entry to the Government infrastructure not later than 5:00 p.m. one working day prior to the date specified for receipt of bids.

(b) Any modification or withdrawal of a bid is subject to the same conditions as in paragraph (a) of this provision.

(c) The only acceptable evidence to establish the date of mailing of a late bid, modification, or withdrawal sent either by registered or certified mail is the U.S. or Canadian Postal Service postmark both on the envelope or wrapper and on the original receipt from the U.S. or Canadian Postal Service. Both postmarks must show a legible date or the bid, modification, or withdrawal shall be processed as if mailed late. "Postmark" means a printed, stamped, or otherwise placed impression (exclusive of a postage meter machine impression) that is readily identifiable without further action as having been supplied and affixed by employees of the U.S. or Canadian Postal Service on the date of mailing. Therefore, bidders should request the postal clerk to place a legible hand cancellation bull's-eye postmark on both the receipt and the envelope or wrapper.

(d) The only acceptable evidence to establish the time of receipt at the Government installation is the time/date stamp of that installation on the bid wrapper or other documentary evidence of receipt maintained by the installation.

(e) The only acceptable evidence to establish the date of mailing of a late bid, modification, or withdrawal sent by U.S. Postal Service Express Mail Next Day Service-Post Office to Addressee is the date entered by the post office receiving clerk on the "Express Mail Next Day Service-Post Office to Addressee" label and the postmark on the envelope or wrapper and on the original receipt from the U.S. Postal Service. "Postmark" has the same meaning as defined in paragraph (c) of this provision, excluding postmarks of the Canadian Postal Service. Therefore, bidders should request the postal clerk to place a legible hand cancellation bull's-eye postmark on both the receipt and the envelope or wrapper.

(f) Notwithstanding paragraph (a) of this provision, a late modification of an otherwise successful bid that makes its terms more favorable to the Government will be considered at any time it is received and may be accepted.

(g) Bids may be withdrawn by written notice or telegram (including mailgram) received at any time before the exact time set for receipt of bids. If the solicitation authorizes facsimile bids, bids may be withdrawn via facsimile received at any time before the exact time set for receipt of bids, subject to the conditions specified in the provision entitled "Facsimile Bids." A bid may be withdrawn in per- son by a bidder or its authorized representative if, before the exact time set for receipt of bids, the identity of the person requesting withdrawal is established and the person signs a receipt for the bid.

(h) If an emergency or unanticipated event interrupts normal Government processes so as to cause postponement of the scheduled bid opening, and urgent Government requirements preclude amendment of the solicitation or other notice of an extension of the opening date, the time specified for receipt of bids will be deemed to be extended to the same time of day specified in the solicitation on the first work day on which normal Government processes resume.

19. FAR 52.214-18 PREPARATION OF BIDS--CONSTRUCTION (APR 1984)

(a) Bids must be (1) submitted on the forms furnished by the Government or on copies of those forms, and (2) manually signed. The person signing a bid must initial each erasure or change appearing on any bid form.

(b) The bid form may require bidders to submit bid prices for one or more items on various bases, including--

(1) Lump sum bidding;

(2) Alternate prices;

(3) Units of construction; or

(4) Any combination of subparagraphs (1) through (3) above.

(c) If the solicitation requires bidding on all items, failure to do so will disqualify the bid. If bidding on all items is not required, bidders should insert the words "no bid" in the space provided for any item on which no price is submitted.

(d) Alternate bids will not be considered unless this solicitation authorizes their submission.

20. FAR 52.214-19 CONTRACT AWARD--SEALED BIDDING--CONSTRUCTION (AUG 1996)

(a) The Government will evaluate bids in response to this solicitation without discussions and will award a contract to the responsible bidder whose bid, conforming to the solicitation, will be most advantageous to the Government, considering only price and the price-related factors specified elsewhere in the solicitation.

(b) The Government may reject any or all bids, and waive informalities or minor irregularities in bids received.

(c) The Government may accept any item or combination of items, unless doing so is precluded by a restrictive limitation in the solicitation or the bid.

(d) The Government may reject a bid as nonresponsive if the prices bid are materially unbalanced between line items or subline items. A bid is materially unbalanced when it is based on prices significantly less than cost for some work and prices which are significantly overstated in relation to cost for other work, and if there is a reasonable doubt that the bid will result in the lowest overall cost to the Government even though it may be the low evaluated bid, or if it is so unbalanced as to be tantamount to allowing an advance payment.

21. SAACONS 52.0214-4583 TELEGRAPHIC BIDS/OFFERS (APR 1992)

TELEGRAPHIC BIDS/OFFERS ARE NOT ACCEPTABLE.

However, bids/offers may be modified or withdrawn by written or telegraphic notice. Any telegram to modify or withdraw a bid/offer sent to this office must be received in the office designated in the Invitation for Bids/Request for Proposal (IFB/RFP) for receipt of bids/offers not later than the exact date and time set for bid opening/receipt of proposals. A telegraphic modification or withdrawal of a bid/offer received in such office by telephone from the receiving telegraph office not later than the exact date and time set for bid opening/receipt of proposals shall be considered. However, the telephone message shall be confirmed by the telegraph company by sending a copy of the written telegram that formed the basis for the telephone call. The written telegram shall be sealed in an envelope by a proper official and sent to the office designated in the IFB/RFP for receipt of bids/offers. The official shall write on the envelope (1) the date and time of receipt and by whom, and (2) the number of the IFB/RFP, and shall sign the envelope. The

bidder/offeror is responsible to inform the telegraph company of these requirements. No one from this office will be dispatched to the local telegraph office to pick up any telegram for any reason.

22. SAACONS 52.0214-4584 FACSIMILE BIDS/OFFERS (APR 1992)

Facsimile bids/offers, modifications thereto, or cancellations of bids/offers will not be accepted.

23. FAR 52.216-1 TYPE OF CONTRACT (APR 1984)

The Government contemplates award of a firm, fixed-price contract resulting from this solicitation.

24. FAR 52.222-23 NOTICE OF REQUIREMENT FOR AFFIRMATIVE ACTION TO ENSURE EQUAL EMPLOYMENT OPPORTUNITY (APR 1984)

(a) The offeror's attention is called to the Equal Opportunity clause and the Affirmative Action Compliance Requirements for Construction clause of this solicitation.

(b) The goals for minority and female participation, expressed in percentage terms for the Contractor's aggregate workforce in each trade on all construction work in the covered area, are as follows:

Goals for minority participation for each trade	Goals for female participation for each trade
6.0%	6.9%

These goals are applicable to all the Contractor's construction work performed in the covered area. If the Contractor performs construction work in a geographical area located outside of the covered area, the Contractor shall apply the goals established for the geographical area where the work is actually performed. Goals are published periodically in the Federal Register in notice form, and these notices may be obtained from any Office of Federal Contract Compliance Programs office.

(c) The Contractor's compliance with Executive Order 11246, as amended, and the regulations in 41 CFR 60-4 shall be based on (1) its implementation of the Equal Opportunity clause, (2) specific affirmative action obligations required by the clause entitled "Affirmative Action Compliance Requirements for Construction," and (3) its efforts to meet the goals. The hours of minority and female employment and training must be substantially uniform throughout the length of the contract, and in each trade. The Contractor shall make a good faith effort to employ minorities and women evenly on each of its projects. The transfer of minority or female employees or trainees from Contractor to Contractor, or from project to project, for the sole purpose of meeting the Contractor's goals shall be a violation of the contract, Executive Order 11246, as amended, and the regulations in 41 CFR 60-4. Compliance with the goals will be measured against the total work hours performed.

(d) The Contractor shall provide written notification to the Director, Office of Federal Contract Compliance Programs, within 10 working days following award of any construction subcontract in excess of $10,000 at any tier for construction work under the contract resulting from this solicitation. The notification shall list the--

(1) Name, address, and telephone number of the subcontractor;

(2) Employer's identification number of the subcontractor;

(3) Estimated dollar amount of the subcontract;

(4) Estimated starting and completion dates of the subcontract; and
(5) Geographical area in which the subcontract is to be performed.
(e) As used in this Notice, and in any contract resulting from this solicitation, the "covered area" is Davis, Salt Lake, Tooele, and Weber counties, Utah.

25. FAR 52.225-12 NOTICE OF BUY AMERICAN ACT REQUIREMENT--CONSTRUCTION MATERIALS (MAY 1997) ALTERNATE I (MAY 1997)

(a) Offerors are required to comply with the requirements of Federal Acquisition Regulation (FAR) clause 52.225-5, Buy American Act--Construction Materials, of this solicitation. The terms "construction material" and "domestic construction material," as used in this provision, have the meanings set forth in FAR clause 52.225-5.
(b) An offeror requesting a determination regarding the inapplicability of the Buy American Act shall submit such request with its offer, including the information and applicable supporting data required by paragraphs (c) and (d) of FAR clause 52.225-5.
(c) Evaluation of offers. (1) For evaluation of offers, (unless agency regulations specify a higher percentage) the Government will add to the offered price 6 percent of the cost of any foreign construction material proposed for exception from the requirements of the Buy American Act based on claimed unreasonable cost of domestic construction materials in accordance with paragraph (b)(3)(i) of FAR clause 52.225-5.
(2) If the evaluation of offers results in a tie between an offer including such foreign construction material excepted on the basis of unreasonable cost, as evaluated, and an offer including solely domestic construction material or other foreign construction material listed in the solicitation at paragraph (b)(2) of FAR clause 52.225-5, or subsequently excepted in accordance with paragraphs (b)(3)(ii) or (iii) of FAR clause 52.225-5, award shall be made to the offeror that submitted the latter offer.
(d) Alternate offers.
(1) When an offer includes foreign construction material not listed by the Government in the solicitation at paragraph (b)(2) of FAR clause 52.225-5, offerors also may submit alternate offers based on use of equivalent domestic construction material.
(2) If alternate offers are submitted, a separate Standard Form 1442 shall be submitted for each alternate offer, and a separate price comparison table, prepared in accordance with paragraphs (c) and (d) of FAR clause 52.225-5, shall be submitted for each offer that is based on the use of any foreign construction material for which the Government has not yet determined an exception to apply.
(3) If the Government determines that a particular exception requested under paragraph (c) of FAR clause 52.225-5 does not apply, the Government will evaluate only those offers based on use of the equivalent domestic construction material, and the offeror shall be required to furnish such domestic construction material.
(i) In sealed bid procurements, any offer based on use of that particular foreign construction material shall be rejected as nonresponsive.
(ii) In negotiated procurements, any offer based on use of that particular foreign construction material may not be accepted unless revised during negotiations.

26. SAACONS 52.0228-4504 PERFORMANCE AND PAYMENT BONDS (AUG 1991)

The bidder/offeror whose bid/offer is accepted will, within the time established in the bid, enter into a written contract with the Government and

furnish performance and payment bonds on Government Standard Forms in the amounts indicated.

Within ten (10) calendar days after award and prior to Notice to Proceed the contractor shall furnish two bonds, each with good and sufficient surety or sureties acceptable to the Government, namely a performance bond (Standard Form 25) and a payment bond (Standard Form 25-A). The penal sum of such bonds will be as follows:

a. Performance Bond. The penal amount of performance bond shall be one hundred percent (100%) of the original contract price.

b. Payment Bond. The penal amount of payment bond shall equal (i)fifty percent (50%) of the contract price when the contract price is $1,000,000 or less; (ii) forty percent (40%) of the contract price when the contract price is in excess of $1,000,000 but not more than $5,000,000; (iii) $2,500,000 when the contract price is more than $5,000,000.

Any bonds furnished will be furnished by the contractor to the Government prior to Notice to Proceed and commencement of contract performance.

27. SAACONS 52.0228-4506 INDIVIDUAL SURETIES IN SUPPORT OF BID BONDS (AUG 1991)

Bidders/offerors utilizing individual sureties in support of a bid bond shall include a Standard Form (SF) 28 (Affidavit of Individual Surety), accompanied by a pledge of acceptable assets from each person acting as an individual surety, and include these with the SF 24 (Bid Bond), and the bid itself (see clause titled "Pledges of Assets," FAR 52.228-11).

Pledges of acceptable assets shall be in the form of (1) evidence of an escrow account and/or (2) a recorded lien on real estate. If this is an IFB, failure to provide pledges of acceptable assets, with the bid, in the specified form, accompanied by a properly executed SF 24 and SF 28, will render the bidder nonresponsible and thus ineligible for award. If this is an RFP, failure to provide required documentation described herein may cause the offeror to be deemed "unacceptable".

28. SAACONS 52.228-4507 BID GUARANTEE FORM AND AMOUNT (JAN 1993)

When bids/proposals exceed $25,000, the offeror shall furnish a separate bid guarantee in accordance with the solicitation provision titled "Bid Guarantee", FAR 52.228-1. In accordance with FAR 28.101-2 the bid guarantee amount shall be at least 20 percent of the "bid price" but shall not exceed $3 million. When the penal sum is expressed as a percentage, a maximum dollar limitation may be stated. If there are option line items on the Pricing Schedule (Section 00010), the term "bid price" is hereby defined as the total bid not to include any amount for line items designated as "options". In bids/proposals that contain "additives", the "bid price" is defined as the total of all bid items including additive line items. FAR 28.106-1 states that a Standard Form (SF) 24 shall be used for the bid bond. In accordance with FAR 28.202(a)(1), corporate sureties utilized must appear on the list contained in the Department of Treasury Circular 570 titled "Companies Holding Certificates of Authority as Acceptable Sureties on Federal Bonds and Acceptable Reinsuring Companies."

29. DFARS 252.228-7004 BONDS OR OTHER SECURITY (DEC 1991)

(a) Offerors shall furnish a bid guarantee in the amount of 20% of bid/offer with their bids/offers. The offeror receiving notice of award shall furnish--

(1) A performance bond in the penal amount of 100% of contract price; and

(2) Payment in full of any sum due the Government.

(b) The Contractor shall furnish the performance bond to the Contracting Officer within ten (10) days after receipt of the notice of award. The Contracting Officer will not issue the notice to proceed until receipt of an acceptable performance bond and payment of any sum due the Government.

(c) Bonds supported by sureties whose names appear on the list contained in Treasury Department Circular 570 are acceptable. Performance bonds from individual sureties are acceptable if each person acting as a surety provides a SF 28, Affidavit of Individual Surety, and a pledge of assets acceptable to the Contracting Officer.

30. FAR 52.233-2 SERVICE OF PROTEST (AUG 1996)

(a) Protests, as defined in section 33.101 of the Federal Acquisition Regulation, that are filed directly with an agency, and copies of any protests that are filed with the General Accounting Office (GAO), shall be served on the Contracting Officer (addressed as follows) by obtaining written and dated acknowledgment of receipt from:

Contracting Officer
1325 J Street, Rm 878
Sacramento, California 95814

(b) The copy of any protest shall be received in the office designated above within one day of filing a protest with the GAO.

31. SAACONS 52.0236-4507 ACCEPTANCE OF OFFERS (AUG 1991)

A written award or acceptance of an offer, mailed or otherwise furnished to the successful offeror within the time for acceptance specified in the offer, shall result in a binding contract without further action by either party.

32. FAR 52.252-3 ALTERATIONS IN SOLICITATION (APR 1984)

Portions of this solicitation are altered as follows: N/A

33. FAR 52.252-5 AUTHORIZED DEVIATIONS IN PROVISIONS (APR 1984)

(a) The use in this solicitation of any Federal Acquisition Regulation (48 CFR Chapter 1) provision with an authorized deviation is indicated by the addition of "(DEVIATION)" after the date of the provision.

(b) The use in this solicitation of any (48 CFR Chapter 2) provision with an authorized deviation is indicated by the addition of "(DEVIATION)" after the name of the regulation.

EVALUATION CRITERIA FOR AWARD:

34. SAACONS 52.0214-4503 EVALUATION FOR AWARD (JAN 1991)

The Government contemplates award of one contract to the responsive, responsible bidder who submits the low bid for the total of the following items in Pricing Schedule:

All line items listed in Pricing Schedule.

If the solicitation's Pricing Schedule contains options, see evaluation of options clause below for information on the procedure used by the Government to determine "low bid".

END OF SECTION

SECTION 00600

REPRESENTATIONS, CERTIFICATIONS AND OTHER STATEMENTS OF BIDDERS/OFFERORS

SECTION 00600

REPRESENTATIONS, CERTIFICATIONS
AND OTHER STATEMENTS OF BIDDERS/OFFERORS

INDEX

1.	SAACONS 52.0201.4801	SUBMITTAL INFORMATION (NOV 1993)
2.	FAR 52.203-2	CERTIFICATE OF INDEPENDENT PRICE DETERMINATION (APR 1985)
3.	FAR 52.203-11	CERTIFICATION AND DISCLOSURE REGARDING PAYMENTS TO INFLUENCE CERTAIN FEDERAL TRANSACTIONS (APR 1991)
4.	FAR 52.204-3	TAXPAYER IDENTIFICATION (JUN 1997)
5.	FAR 52.204-5	WOMEN-OWNED BUSINESS (OCT 1995)
6.	FAR 52.209-5	CERTIFICATION REGARDING DEBARMENT, SUSPENSION, PROPOSED DEBARMENT, AND OTHER RESPONSIBILITY MATTERS (MAR 1996)
7.	DFARS 252.209-7001	DISCLOSURE OF OWNERSHIP OR CONTROL BY THE GOVERNMENT OF A TERRORIST COUNTRY (MAR 1998)
8.	DFARS 252.209-7003	COMPLIANCE WITH VETERANS' EMPLOYMENT REPORTING REQUIREMENTS (MAR 1998)
9.	FAR 52.214-2	TYPE OF BUSINESS ORGANIZATION--SEALED BIDDING (JUL 1987)
10.	FAR 52.214-17	AFFILIATED BIDDERS (APR 1984)
11.	FAR 52.219-1	SMALL BUSINESS PROGRAM REPRESENTATION (FEB 1998)
12.	FAR 52.219-2	EQUAL LOW BIDS (OCT 1995)
13.	FAR 52.222-21	CERTIFICATION OF NONSEGREGATED FACILITIES (APR 1984)
14.	FAR 52.222-22	PREVIOUS CONTRACTS AND COMPLIANCE REPORTS (APR 1984)
15.	FAR 52.223-1	CLEAN AIR AND WATER CERTIFICATION (APR 1984)
16.	FAR 52.223-3	HAZARDOUS MATERIAL IDENTIFICATION AND MATERIAL SAFETY DATA (JAN 1997)
17.	FAR 52.223-5	POLLUTION PREVENTION AND RIGHT-TO-KNOW INFORMATION (APR 1998)
18.	FAR 52.223-13	CERTIFICATION OF TOXIC CHEMICAL RELEASE REPORTING (OCT 1996)
19.	DFARS 252.223-7001	HAZARD WARNING LABELS (DEC 1991)
20.	DFARS 252.247-7022	REPRESENTATION OF EXTENT OF TRANSPORTATION BY SEA (AUG 1992)

SECTION 00600

REPRESENTATIONS, CERTIFICATIONS AND OTHER STATEMENTS OF BIDDERS/OFFERORS

1. SAACONS 52.0201.4801 SUBMITTAL INFORMATION (NOV 1993)

Solicitation Number: _____

Offeror's Name, Address, Telephone Number, and Fax Number:

_____

_____

_____

_____

_____

Name of Person to Contact Telephone Number

_____

Fax Number

Commercial & Government Entity (CAGE) Code, if known (see Section 00100):

_____

DUNS Number, if known:

_____

2. FAR 52.203-2 CERTIFICATE OF INDEPENDENT PRICE DETERMINATION (APR 1985)

(a) The offeror certifies that--

(1) The prices in this offer have been arrived at independently, without, for the purpose of restricting competition, any consultation, communication, or agreement with any other offeror or competitor relating to (i) those prices, (ii) the intention to submit an offer, or (iii) the methods or factors used to calculate the prices offered;

(2) The prices in this offer have not been and will not be knowingly disclosed by the offeror, directly or indirectly, to any other offeror or competitor before bid opening (in the case of a sealed bid solicitation) or contract award (in the case of a negotiated solicitation) unless otherwise required by law; and

(3) No attempt has been made or will be made by the offeror to induce any other concern to submit or not to submit an offer for the purpose of restricting competition.

(b) Each signature on the offer is considered to be a certification by the signatory that the signatory--

(1) Is the person in the offeror's organization responsible for determining the prices being offered in this bid or proposal, and that the signatory has not participated and will not participate in any action contrary to subparagraphs (a)(1) through (a)(3) above; or

(2)(i) Has been authorized, in writing, to act as agent for the following principals in certifying that those principals have not participated, and will

not participate in any action contrary to subparagraphs (a)(1) through (a)(3) above_____
(insert full name of person(s) in the offeror's organization responsible for determining the prices offered in this bid or proposal, and the title of his or her position in the offeror's organization);

(ii) As an authorized agent, does certify that the principals named in subdivision (b)(2)(i) above have not participated, and will not participate, in any action contrary to subparagraphs (a)(1) through (a)(3) above; and

(iii) As an agent, has not personally participated, and will not participate, in any action contrary to subparagraphs (a)(1) through (a)(3) above.

(c) If the offeror deletes or modifies subparagraph (a)(2) above, the offeror must furnish with its offer a signed statement setting forth in detail the circumstances of the disclosure.

3. FAR 52.203-11 CERTIFICATION AND DISCLOSURE REGARDING PAYMENTS TO INFLUENCE CERTAIN FEDERAL TRANSACTIONS (APR 1991)

(a) The definitions and prohibitions contained in the clause, at FAR 52.203-12, Limitation on Payments to Influence Certain Federal Transactions, included in this solicitation, are hereby incorporated by reference in paragraph (b) of this certification.

(b) The offeror, by signing its offer, hereby certifies to the best of his or her knowledge and belief that on or after December 23, 1989,--

(1) No Federal appropriated funds have been paid or will be paid to any person for influencing or attempting to influence an officer or employee of any agency, a Member of Congress, an officer or employee of Congress, or an employee of a Member of Congress on his or her behalf in connection with the awarding of any Federal contract, the making of any Federal grant, the making of any Federal loan, the entering into of any cooperative agreement, and the extension, continuation, renewal, amendment or modification of any Federal contract, grant, loan, or cooperative agreement;

(2) If any funds other than Federal appropriated funds (including profit or fee received under a covered Federal transaction) have been paid, or will be paid, to any person for influencing or attempting to influence an officer or employee of any agency, a Member of Congress, an officer or employee of Congress, or an employee of a Member of Congress on his or her behalf in connection with this solicitation, the offeror shall complete and submit, with its offer, OMB standard form LLL, Disclosure of Lobbying Activities, to the Contracting Officer; and

(3) He or she will include the language of this certification in all subcontract awards at any tier and require that all recipients of subcontract awards in excess of $100,000 shall certify and disclose accordingly.

(c) Submission of this certification and disclosure is a prerequisite for making or entering into this contract imposed by section 1352, title 31, United States Code. Any person who makes an expenditure prohibited under this provision or who fails to file or amend the disclosure form to be filed or amended by this provision, shall be subject to a civil penalty of not less than $10,000, and not more than $100,000, for each such failure.

4. FAR 52.204-3 TAXPAYER IDENTIFICATION (JUN 1997)

(a) Definitions.

"Common parent," as used in this solicitation provision, means that corporate entity that owns or controls an affiliated group of corporations that files its Federal income tax returns on a consolidated basis, and of which the offeror is a member.

"Corporate status," as used in this solicitation provision, means a designation as to whether the offeror is a corporate entity, an unincorporated

entity (e.g., sole proprietorship or partnership), or a corporation providing medical and health care services.

"Taxpayer Identification Number (TIN)," as used in this solicitation provision, means the number required by the IRS to be used by the offeror in reporting income tax and other returns.

(b) All offerors are required to submit the information required in paragraphs (c) through (e) of this solicitation provision in order to comply with reporting requirements of 26 U.S.C. 6041, 6041A, and 6050M and implementing regulations issued by the Internal Revenue Service (IRS). If the resulting contract is subject to the reporting requirements described in FAR 4.903, the failure or refusal by the offeror to furnish the information may result in a 31 percent reduction of payments otherwise due under the contract.

(c) Taxpayer Identification Number (TIN).

[ ] TIN: _____.

[ ] TIN has been applied for.

[ ] TIN is not required because:

[ ] Offeror is a nonresident alien, foreign corporation, or foreign partnership that does not have income effectively connected with the conduct of a trade or business in the U.S. and does not have an office or place of business or a fiscal paying agent in the U.S.;

[ ] Offeror is an agency or instrumentality of a foreign government;

[ ] Offeror is an agency or instrumentality of a Federal, state, or local government;

[ ] Other. State basis. _____

(d) Corporate Status.

[ ] Corporation providing medical and health care services, or engaged in the billing and collecting of payments for such services;

[ ] Other corporate entity;

[ ] Not a corporate entity;

[ ] Sole proprietorship

[ ] Partnership

[ ] Hospital or extended care facility described in 26 CFR 501(c)(3) that is exempt from taxation under 26 CFR 501(a).

(e) Common Parent.

[ ] Offeror is not owned or controlled by a common parent as defined in paragraph (a) of this clause.

[ ] Name and TIN of common parent:

Name _____

TIN _____

5. FAR 52.204-5 WOMEN-OWNED BUSINESS (OCT 1995)

(a) Representation. The offeror represents that it ( ) is, ( ) is not a women-owned business concern.

(b) Definition. "Women-owned business concern," as used in this provision, means a concern which is at least 51 percent owned by o ne or more women; or in the case of any publicly owned business, at least 51 percent of the stock of which is owned by one or more women; and whose management and daily business operations are controlled by one or more women.

6. FAR 52.209-5 CERTIFICATION REGARDING DEBARMENT, SUSPENSION, PROPOSED DEBARMENT, AND OTHER RESPONSIBILITY MATTERS (MAR 1996)

(a)(1) The Offeror certifies, to the best of its knowledge and belief, that--

(i) The Offeror and/or any of its Principals--

(A) Are [ ] are not [ ] presently debarred, suspended, proposed for debarment, or declared ineligible for the award of contracts by any Federal agency;

(B) Have [ ] have not [ ], within a three-year period preceding this offer, been convicted of or had a civil judgment rendered against them for: commission of fraud or a criminal offense in connection with obtaining, attempting to obtain, or performing a public (Federal, state, or local) contract or subcontract; violation of Federal or state antitrust statutes relating to the submission of offers; or commission of embezzlement, theft, forgery, bribery, falsification or destruction of records, making false statements, or receiving stolen property; and

(C) Are [ ] are not [ ] presently indicted for, or otherwise criminally or civilly charged by a governmental entity with, commission of any of the offenses enumerated in subdivision (a)(1)(i)(B) of this provision.

(ii) The Offeror has [ ] has not [ ], within a three-year period preceding this offer, had one or more contracts terminated for default by any Federal agency.

(2) "Principals," for the purposes of this certification, means officers; directors; owners; partners; and, persons having primary management or supervisory responsibilities within a business entity (e.g., general manager; plant manager; head of a subsidiary, division, or business segment, and similar positions).

THIS CERTIFICATION CONCERNS A MATTER WITHIN THE JURISDICTION OF AN AGENCY OF THE UNITED STATES AND THE MAKING OF A FALSE, FICTITIOUS, OR FRAUDULENT CERTIFICATION MAY RENDER THE MAKER SUBJECT TO PROSECUTION UNDER SECTION 1001, TITLE 18, UNITED STATES CODE.

(b) The Offeror shall provide immediate written notice to the Contracting Officer if, at any time prior to contract award, the Offeror learns that its certification was erroneous when submitted or has become erroneous by reason of changed circumstances.

(c) A certification that any of the items in paragraph (a) of this provision exists will not necessarily result in withholding of an award under this solicitation. However, the certification will be considered in connection with a determination of the Offeror's responsibility. Failure of the Offeror to furnish a certification or provide such additional information as requested by the Contracting Officer may render the Offeror nonresponsible.

(d) Nothing contained in the foregoing shall be construed to require establishment of a system of records in order to render, in good faith, the certification required by paragraph (a) of this provision. The knowledge and information of an Offeror is not required to exceed that which is normally possessed by a prudent person in the ordinary course of business dealings.

(e) The certification in paragraph (a) of this provision is a material representation of fact upon which reliance was placed when making award. If it is later determined that the Offeror knowingly rendered an erroneous certification, in addition to other remedies available to the Government, the Contracting Officer may terminate the contract resulting from this solicitation for default.

7. DFARS 252.209-7001 DISCLOSURE OF OWNERSHIP OR CONTROL BY THE GOVERNMENT OF A TERRORIST COUNTRY (MAR 1998)

(a) Definitions.

As used in this provision-

(1) "Government of a terrorist country" includes the state and the government of a terrorist country, as well as any political subdivision, agency, or instrumentality thereof.

(2) "Terrorist country" means a country determined by the Secretary of State, under section 6(j)(1)(A)) of the Export Administration Act of 1979 (50 U.S.C. App. 2405(j)(i)(A)), to be a country the government of which has repeatedly provided support for acts of international terrorism. As of the date of this provision, terrorist countries include: Cuba, Iran, Iraq, Libya, North Korea, Sudan, and Syria.

(3) "Significant interest" means-

(i) Ownership of or beneficial interest in 5 percent or more of the firm's or subsidiary's securities. Beneficial interest includes holding 5 percent or more of any class of the firm's securities in "nominee shares," "street names," or some other method of holding securities that does not disclose the beneficial owner;

(ii) Holding a management position in the firm, such as a director or officer;

(iii) Ability to control or influence the election, appointment, or tenure of directors or officers in the firm;

(iv) Ownership of 10 percent or more of the assets of a firm such as equipment, buildings, real estate, or other tangible assets of the firm; or

(v) Holding 50 percent or more of the indebtedness of a firm.

(b) Prohibition on award.

In accordance with 10 U.S.C. 2327, no contract may be awarded to a firm or a subsidiary of a firm if the government of a terrorist country has a significant interest in the firm or subsidiary [or, in the case of a subsidiary, the firm that owns the subsidiary], unless a waiver is granted by the Secretary of Defense.

(c) Disclosure.

The Offeror shall disclose any significant interest the government of each of the following countries has in the Offeror or a subsidiary of the Offeror. If the Offeror is a subsidiary, it shall also disclose any significant interest the government of a terrorist country has in any firm that owns or controls the subsidiary. The disclosure shall include--

(1) Identification of each government holding a significant interest; and

(2) A description of the significant interest held by each Government.

8. DFARS 252.209-7003 COMPLIANCE WITH VETERANS' EMPLOYMENT REPORTING REQUIREMENTS (MAR 1998)

By submission of its offer, the offeror represents that, if it is subject to the reporting requirements of 37 U.S.C. 4212(d) (i.e., the VETS-100 report required by Federal Acquisition Regulation clause 52.222-37, Employment Reports on Disabled Veterans and Veterans of the Vietnam Era), it has submitted the more recent report required by 37 U.S.C. 4212(d)).

9. FAR 52.214-2 TYPE OF BUSINESS ORGANIZATION--SEALED BIDDING (JUL 1987)

The bidder, by checking the applicable box, represents that--

(a) It operates as [ ] a corporation incorporated under the laws of the State of _____, [ ] an individual, [ ] a partnership, [ ] a nonprofit organization, or [ ] a joint venture; or

(b) If the bidder is a foreign entity, it operates as [ ] an individual, [ ] a partnership, [ ] a nonprofit organization, [ ] a joint venture, or [ ] a corporation, registered for business in _____. (country)

10. FAR 52.214-17 AFFILIATED BIDDERS (APR 1984)

(a) Business concerns are affiliates of each other when, either directly or indirectly, (1) one concern controls or has the power to control the other, or (2) a third party controls or has the power to control both.

(b) Each bidder shall submit with its bid an affidavit stating that it has no affiliates, or containing the following information:

(1) The names and addresses of all affiliates of the bidder.

(2) The names and addresses of all persons and concerns exercising control or ownership of the bidder and any or all of its affiliates, and whether they exercise such control or ownership as common officers, directors, stockholders holding controlling interest, or otherwise.

11. FAR 52.219-1 SMALL BUSINESS PROGRAM REPRESENTATION (FEB 1998)

(a)(1) The standard industrial classification (SIC) code for this acquisition is 1542 - General Contractors-Nonresidential Buildings, Other Than Industrial Buildings and Warehouses.

(2) The small business size standard is $17,000,000

(3) The small business size standard for a concern which submits an offer in its own name, other than on a construction or service contract, but which proposes to furnish a product which it did not itself manufacture, is 500 employees.

(b) *Representations*. (1) The offeror represents as part of its offer that it [ ] is, [ ] is not a small business concern.

(2) (Complete only if offeror represented itself as a small business concern in paragraph (b)(1) of this provision.) The offeror represents as part of its offer that it [ ] is, [ ] is not a small disadvantaged business concern.

(3) (Complete only if offeror represented itself as a small business concern in paragraph (b)(1) of this provision.) The offeror represents as part of its offer that it [ ] is, [ ] is not a women-owned small business concern.

(c) *Definition*s.

"Joint venture," for purposes of a small disadvantaged business (SDB) set-aside or price evaluation preference (as prescribed at 13 CFR 124.321), is a concern that is owned and controlled by one or more socially and economically disadvantaged individuals entering into a joint venture agreement with one or more business concerns and is considered to be affiliated for size purposes with such other concern(s). The combined annual receipts or employees of the concerns entering into the joint venture must meet the applicable size standard corresponding to the SIC code designated for the contract. The majority of the venture's earnings must accrue directly to the socially and economically disadvantaged individuals in the SDB concern(s) in the joint venture. The percentage of the ownership involvement in a joint venture by disadvantaged individuals must be at least 51 percent.

"Small business concern," as used in this provision, means a concern, including its affiliates, that is independently owned and operated, not dominant in the field of operation in which it is bidding on Government contracts, and qualified as a small business under the criteria in 13 CFR Part 121 and the size standard in paragraph (a) of this provision.

"Small disadvantaged business concern," as used in this provision, means a small business concern that (1) is at least 51 percent unconditionally owned by one or more individuals who are both socially and economically disadvantaged, or a publicly owned business having at least 51 percent of its stock unconditionally owned by one or more socially and economically disadvantaged individuals, and (2) has its management and daily business controlled by one or more such individuals. This term also means a small business concern that is at least 51 percent unconditionally owned by an economically disadvantaged Indian tribe or Native Hawaiian Organization, or a publicly owned business having at least 51 percent of its stock unconditionally owned by one or more of these entities, which has its management and daily business controlled by members of an economically disadvantaged Indian tribe or Native Hawaiian Organization, and which meets the requirements of 13 CFR Part 124.

"Woman-owned small business concern," as used in this provision, means a small business concern--

(1) Which is at least 51 percent owned by one or more women or, in the case of any publicly owned business, at least 51 percent of the stock of which is owned by one or more women; and

(2) Whose management and daily business operations are controlled by one or more women.

(d) *Notice*. (1) If this solicitation is for supplies and has been set aside, in whole or in part, for small business concerns, then the clause in this solicitation providing notice of the set-aside contains restrictions on the source of the end items to be furnished.

(2) Under 15 U.S.C. 645(d), any person who misrepresents a firm's status as a small or small disadvantaged business concern in order to obtain a contract to be awarded under the preference programs established pursuant to section 8(a), 8(d), 9, or 15 of the Small Business Act or any other provision of Federal law that specifically references section 8(d) for a definition of program eligibility, shall--

(i) Be punished by imposition of fine, imprisonment, or both;

(ii) Be subject to administrative remedies, including suspension and debarment; and

(iii) Be ineligible for participation in programs conducted under the authority of the Act.

12. FAR 52.219-2 EQUAL LOW BIDS (OCT 1995)

(a) This provision applies to small business concerns only.

(b) The bidder's status as a labor surplus area (LSA) concern may affect entitlement to award in case of tie bids. If the bidder wishes to be considered for this priority, the bidder must identify, in the following space, the LSA in which the costs to be incurred on account of manufacturing or production (by the bidder of the first-tier subcontractors) amount to more than 50 percent of the contract price.

_____ _____

_____ _____

(c) Failure to identify the labor surplus areas as specified in paragraph (b) of this provision will preclude the bidder from receiving priority consideration. If the bidder is awarded a contract as a result of receiving priority consideration under this provision and would not have otherwise received award, the bidder shall perform the contract or cause the contract to be performed in accordance with the obligations of an LSA concern.

13. FAR 52.222-21 CERTIFICATION OF NONSEGREGATED FACILITIES (APR 1984)

(a) "Segregated facilities," as used in this provision, means any waiting rooms, work areas, rest rooms and wash rooms, restaurants and other eating areas, time clocks, locker rooms and other storage or dressing areas, parking lots, drinking fountains, recreation or entertainment areas, transportation, and housing facilities provided for employees, that are segregated by explicit directive or are in fact segregated on the basis of race, color, religion, or national origin because of habit, local custom, or otherwise.

(b) By the submission of this offer, the offeror certifies that it does not and will not maintain or provide for its employees any segregated facilities at any of its establishments, and that it does not and will not permit its employees to perform their services at any location under its control where segregated facilities are maintained. The offeror agrees that a breach of this certification is a violation of the Equal Opportunity clause in the contract.

(c) The offeror further agrees that (except where it has obtained identical certifications from proposed subcontractors for specific time periods) it will--

(1) Obtain identical certifications from proposed subcontractors before the award of subcontracts under which the subcontractor will be subject to the Equal Opportunity clause;

(2) Retain the certifications in the files; and

(3) Forward the following notice to the proposed subcontractors (except if the proposed subcontractors have submitted identical certifications for specific time periods):

NOTICE TO PROSPECTIVE SUBCONTRACTORS OF REQUIREMENT FOR CERTIFICATIONS OF NONSEGREGATED FACILITIES.

A Certification of Nonsegregated Facilities must be submitted before the award of a subcontract under which the subcontractor will be subject to the Equal Opportunity clause. The certification may be submitted either for each subcontract or for all subcontracts during a period (i.e., quarterly, semiannually, or annually).

NOTE: The penalty for making false statements in offers is prescribed in 18 U.S.C. 1001.

14. FAR 52.222-22 PREVIOUS CONTRACTS AND COMPLIANCE REPORTS (APR 1984)

The offeror represents that--

(a) It [ ] has, [ ] has not, participated in a previous contract or subcontract subject either to the Equal Opportunity clause of this solicitation, the clause originally contained in Section 310 of Executive Order No. 10925, or the clause contained in Section 201 of Executive Order No. 11114;

(b) It [ ] has, [ ] has not, filed all required compliance reports; and

(c) Representations indicating submission of required compliance reports, signed by proposed subcontractors, will be obtained before subcontract awards.

15. FAR 52.223-1 CLEAN AIR AND WATER CERTIFICATION (APR 1984)

The Offeror certifies that--

(a) Any facility to be used in the performance of this proposed contract is [ ] is not [ ] listed on the Environmental Protection Agency (EPA) List of Violating Facilities;

(b) The Offeror will immediately notify the Contracting Officer, before award, of the receipt of any communication from the Administrator, or a designee, of the EPA, indicating that any facility that the Offeror proposes to use for the performance of the contract is under consideration to be listed on the EPA List of Violating Facilities; and

(c) The Offeror will include a certification substantially the same as this certification, including this paragraph (c), in every nonexempt subcontract.

16. FAR 52.223-3 HAZARDOUS MATERIAL IDENTIFICATION AND MATERIAL SAFETY DATA (JAN 1997)

(a) "Hazardous material," as used in this clause, includes any material defined as hazardous under the latest version of Federal Standard No. 313 (including revisions adopted during the term of the contract).

(b) The Offeror must list any hazardous material, as defined in paragraph (a) of this clause, to be delivered under this contract. The hazardous material shall be properly identified and include any applicable identification number, such as National Stock Number or Special Item Number. This information shall also be included on the Material Safety Data Sheet submitted under this contract.

Material (If none, insert None)	Identification No.

(c) This list must be updated during performance of the contract whenever the Contractor determines that any other material to be delivered under this contract is hazardous.

(d) The apparently successful Offeror agrees to submit, for each item as required prior to award, a Material Safety Data Sheet, meeting the requirements of 29 CFR 1910.1200(g) and the latest version of Federal Standard No. 313, for all hazardous material identified in paragraph (b) of this clause. Data shall be submitted in accordance with Federal Standard No. 313, whether or not the apparently successful Offeror is the actual manufacturer of these items. Failure to submit the Material Safety Data Sheet prior to award may result in the apparently successful Offeror being considered nonresponsible and ineligible for award.

(e) If, after award, there is a change in the composition of the item(s) or a revision to Federal Standard No. 313, which renders incomplete or inaccurate the data submitted under paragraph (d) of this clause or the certification submitted under paragraph (c) of this clause, the Contractor shall promptly notify the Contracting Officer and resubmit the data.

(f) Neither the requirements of this clause nor any act or failure to act by the Government shall relieve the Contractor of any responsibility or liability for the safety of Government, Contractor, or subcontractor personnel or property.

(g) Nothing contained in this clause shall relieve the Contractor from complying with applicable Federal, State, and local laws, codes, ordinances, and regulations (including the obtaining of licenses and permits) in connection with hazardous material.

(h) The Government's rights in data furnished under this contract with respect to hazardous material are as follows:

(1) To use, duplicate and disclose any data to which this clause is applicable. The purposes of this right are to--

(i) Apprise personnel of the hazards to which they may be exposed in using, handling, packaging, transporting, or disposing of hazardous materials;

(ii) Obtain medical treatment for those affected by the material; and

(iii) Have others use, duplicate, and disclose the data for the Government for these purposes.

(2) To use, duplicate, and disclose data furnished under this clause, in accordance with subparagraph (h)(1) of this clause, in precedence over any other clause of this contract providing for rights in data.

(3) The Government is not precluded from using similar or data acquired from other sources.

17. FAR 52.223-5 POLLUTION PREVENTION AND RIGHT-TO-KNOW INFORMATION (APR 1998)

(a) Executive Order 12856 of August 3, 1993, requires Federal facilities to comply with the provisions of the Emergency Planning and Community Right-to-Know Act of 1986 (EPCRA) (42 U.S.C. 11001-11050) and the Pollution Prevention Act of 1990 (PPA) (42 U.S.C. 13101-13109).

(b) The Contractor shall provide all information needed by the Federal facility to comply with the emergency planning reporting requirements of Section 302 of EPCRA; the emergency notice requirements of Section 304 of EPCRA; the list of Material Safety Data Sheets required by Section 311 of EPCRA; the emergency and hazardous chemical inventory forms of Section 312 of EPCRA; the toxic chemical release inventory of Section 313 of EPCRA, which includes the reduction and recycling information required by Section 6607 of PPA; and the toxic chemical reduction goals requirements of Section 3-302 of Executive Order 12856.

18. FAR 52.223-13 CERTIFICATION OF TOXIC CHEMICAL RELEASE REPORTING (OCT 1996)

(a) Submission of this certification is a prerequisite for making or entering into this contract imposed by Executive Order 12969, August 8, 1995.

(b) By signing this offer, the offeror certifies that--

(1) As the owner or operator of facilities that will be used in the performance of this contract that are subject to the filing and reporting requirements described in section 313 of the Emergency Planning and Community Right-to-Know Act of 1986 (EPCRA) (42 U.S.C. 11023) and section 6607 of the Pollution Prevention Act of 1990 (PPA) (42 U.S.C. 13106), the offeror will file and continue to file for such facilities for the life of the contract the Toxic Chemical Release Inventory Form (Form R) as described in sections 313(a) and (g) of EPCRA and section 6607 of PPA; or

(2) None of its owned or operated facilities to be used in the performance of this contract is subject to the Form R filing and reporting requirements because each such facility is exempt for at least one of the following reasons: [*Check each block that is applicable*.]

[ ] (i) The facility does not manufacture, process, or otherwise use any toxic chemicals listed under section 313(c) of EPCRA, 42 U.S.C. 11023(c);

[ ] (ii) The facility does not have 10 or more full-time employees as specified in section 313(b)(1)(A) of EPCRA, 42 U.S.C. 11023(b)(1)(A);

[ ] (iii) The facility does not meet the reporting thresholds of toxic chemicals established under section 313(f) of EPCRA, 42 U.S.C. 11023(f) (including the alternate thresholds at 40 CFR 372.27, provided an appropriate certification form has been filed with EPA);

[ ] (iv) The facility does not fall within Standard Industrial Classification Code (SIC) designations 20 through 39 as set forth in section 19.102 of the Federal Acquisition Regulation; or

[ ] (v) The facility is not located within any State of the United States, the District of Columbia, the Commonwealth of Puerto Rico, Guam, American Samoa, the United States Virgin Islands, the Northern Mariana Islands, or any other territory or possession over which the United States has jurisdiction.

19. DFARS 252.223-7001 HAZARD WARNING LABELS (DEC 1991)

(a) "Hazardous material," as used in this clause, is defined in the Hazardous Material Identification and Material Safety Data clause of this contract.

(b) The Contractor shall label the item package (unit container) of any hazardous material to be delivered under this contract in accordance with the Hazard Communication Standard (29 CFR 1910.1200 et seq.). The Standard requires that the hazard warning label conform to the requirements of the standard unless the material is otherwise subject to the labeling requirements of one of the following statutes:

(1) Federal Insecticide, Fungicide and Rodenticide Act;

(2) Federal Food, Drug and Cosmetics Act;

(3) Consumer Product Safety Act;

(4) Federal Hazardous Substances Act; or

(5) Federal Alcohol Administration Act.

(c) The Offeror shall list which hazardous material listed in the Hazardous Material Identification and Material Safety Data clause of this contract will be labeled in accordance with one of the Acts in paragraphs (b)(1) through (5) of this clause instead of the Hazard Communication Standard. Any hazardous material not listed will be interpreted to mean that a label is required in accordance with the Hazard Communication Standard.

Material (if none, insert "none.")	Act

(d) The apparently successful Offeror agrees to submit, before award, a copy of the hazard warning label for all hazardous materials not listed in paragraph (c) of this clause. The Offeror shall submit the label with the Material Safety Data Sheet being furnished under the Hazardous Material Identification and Material Safety Data clause of this contract.

(e) The Contractor shall also comply with MIL-STD-129, Marking for Shipment and Storage (including revisions adopted during the term of this contract).

20. DFARS 252.247-7022 REPRESENTATION OF EXTENT OF TRANSPORTATION BY SEA (AUG 1992)

(a) The Offeror shall indicate by checking the appropriate blank in paragraph (b) of this provision whether transportation of supplies by sea is anticipated under the resultant contract. The term supplies is defined in the Transportation of Supplies by Sea clause of this solicitation.

(b) Representation.

The Offeror represents that it--

_____ Does anticipate that supplies will be transported by sea in the performance of any contract or subcontract resulting from this solicitation.

_____ Does not anticipate that supplies will be transported by sea in the performance of any contract or subcontract resulting from this solicitation.

(c) Any contract resulting from this solicitation will include the Transportation of Supplies by Sea clause. If the Offeror represents that it will not use ocean transportation, the resulting contract will also include the Defense FAR Supplement clause at 252.247-7024, Notification of Transportation of Supplies by Sea.

END OF SECTION

SECTION 00700

CONSTRUCTION CONTRACT CLAUSES

SECTION 00700

CONTRACT CLAUSES

FAR 52.252-2 CLAUSES INCORPORATED BY REFERENCE (FEB 1998)

This contract incorporates one or more clauses by reference, with the same force and effect as if they were given in full text. Upon request, the Contracting Officer will make their full text available. Also, the full text of a clause may be accessed electronically at this/these address(es):

http://www.arnet.gov/References/References.html

CONTRACT CLAUSES BY REFERENCE:

1.	DFARS 252.201-7000	CONTRACTING OFFICER'S REPRESENTATIVE (DEC 1991)
2.	FAR 52.202-1 I	DEFINITIONS (OCT 1995)--ALTERNATE I (APR 1984)
3.	FAR 52.203-3	GRATUITIES (APR 1984)
4.	FAR 52.203-5	COVENANT AGAINST CONTINGENT FEES (APR 1984)
5.	FAR 52.203-6	RESTRICTIONS ON SUBCONTRACTOR SALES TO THE GOVERNMENT (JUL 1995)
6.	FAR 52.203-7	ANTI-KICKBACK PROCEDURES (JUL 1995)
7.	FAR 52.203-10	PRICE OR FEE ADJUSTMENT FOR ILLEGAL OR IMPROPER ACTIVITY (JAN 1997)
8.	FAR 52.203-12	LIMITATION ON PAYMENTS TO INFLUENCE CERTAIN FEDERAL TRANSACTIONS (JUN 1997) (APPLICABLE OVER $100,000)
9.	DFARS 252.203-7001	SPECIAL PROHIBITION ON EMPLOYMENT (JUN 1997)
10.	DFARS 252.203-7002	DISPLAY OF DOD HOTLINE POSTER (DEC 1991) (APPLICABLE OVER $5 MILLION)
11.	FAR 52.204-2 II	SECURITY REQUIREMENTS (AUG 1996)--ALTERNATE II (APR 1984) (APPLICABLE IF CONTRACTOR HAS ACCESS TO CLASSIFIED INFORMATION)
12.	DFARS 252.204-7000	DISCLOSURE OF INFORMATION (DEC 1991) (APPLICABLE IF CONTRACTOR HAS ACCESS TO INFORMATION INAPPROPRIATE FOR RELEASE)
13.	DFARS 252.205-7000	PROVISION OF INFORMATION TO COOPERATIVE AGREEMENT HOLDERS (DEC 1991) (APPLICABLE OVER $500,000)
14.	FAR 52.209-6	PROTECTING THE GOVERNMENT'S INTEREST WHEN SUBCONTRACTING WITH CONTRACTORS DEBARRED, SUSPENDED OR PROPOSED FOR DEBARMENT (JUL 1995)

15.	DFARS 252.209-7000	ACQUISITION FROM SUBCONTRACTORS SUBJECT TO ON-SITE INSPECTION UNDER THE INTERMEDIATE-RANGE NUCLEAR FORCES (INF) TREATY (NOV 1995)
16.	DFARS 252.209-7004	SUBCONTRACTING WITH FIRMS THAT ARE OWNED OR CONTROLLED BY THE GOVERNMENT OF A TERRORIST COUNTRY (MAR 1998)
17.	FAR 52.211-15	DEFENSE PRIORITY AND ALLOCATION REQUIREMENTS (SEP 1990)
18.	FAR 52.211-18	VARIATION IN ESTIMATED QUANTITY (APR 1984) (APPLICABLE IF THERE ARE ESTIMATED-QUANTITY LINE ITEMS IN PRICING SCHEDULE)
19.	FAR 52.214-26	AUDIT AND RECORDS--SEALED BIDDING (OCT 1997) (APPLICABLE IF SEALED BIDDING - SEE BLOCK 2, SF1442 - AND OVER $500,000)
20.	FAR 52.214-27	PRICE REDUCTION FOR DEFECTIVE COST OR PRICING DATA-MODIFICATIONS-SEALED BIDDING (OCT 1997) (APPLICABLE IF SEALED BIDDING - SEE BLOCK 2, SF1442 - AND OVER $500,000)
21.	FAR 52.214-28	SUBCONTRACTOR COST OR PRICING DATA--MODIFICATIONS--SEALED BIDDING (OCT 1997) (APPLICABLE IF SEALED BIDDING - SEE BLOCK 2, SF1442 - AND OVER $500,000)
22.	FAR 52.214-29	ORDER OR PRECEDENCE--SEALED BIDDING (JAN 1986) (APPLICABLE IF SEALED BIDDING - SEE BLOCK 2, SF1442)
23.	FAR 52.215-2	AUDIT AND RECORDS--NEGOTIATION (AUG 1996) (APPLICABLE IF CONTRACTING BY NEGOTIATIONS)
24.	FAR 52.215-10	PRICE REDUCTION FOR DEFECTIVE COST OR PRICING DATA (OCT 1997) (APPLICABLE IF CONTRACTING BY NEGOTIATIONS AND COST OR PRICING DATA IS REQUIRED)
25.	FAR 52.215-11	PRICE REDUCTION FOR DEFECTIVE COST OR PRICING DATA -- MODIFICATIONS (OCT 1997) (APPLICABLE IF CONTRACTING BY NEGOTIATIONS AND COST OR PRICING DATA IS REQUIRED FOR PRICING OF MODIFICATIONS)
26.	FAR 52.215-12	SUBCONTRACTOR COST OR PRICING DATA (OCT 1997) (APPLICABLE FAR 52.215-10 APPLIES)
27.	FAR 52.215-13	SUBCONTRACTOR COST OR PRICING DATA - MODIFICATIONS (OCT 1997) (APPLICABLE FAR 52.215-11 APPLIES)
28.	FAR 52.215-15	TERMINATION OF DEFINED BENEFIT PENSION PLANS (OCT 1997) (APPLICABLE IF COST OR PRICING DATA IS REQUIRED AND FOR WHICH ANY PREAWARD OR POSTAWARD COST DETERMINATIONS WILL BE SUBJECT TO FAR SUBPART 31.2)

29.	FAR 52.215-17	WAIVER OF FACILITIES CAPITAL COST OF MONEY (OCT 1997) (APPLICABLE ANY TIME THE COST PRINCIPLES OF FAR 31.2 APPLY - MODIFICATIONS - AND ORIGINAL BID/OFFER DID NOT INCLUDE FACILITIES CAPITAL COST OF MONEY)
30.	FAR 52.215-18	REVERSION OR ADJUSTMENT OF PLANS FOR POSTRETIREMENT BENEFITS (PRB) OTHER THAN PENSIONS (OCT 1997) (APPLICABLE IF COST OR PRICING DATA WILL BE REQUIRED OR FOR WHICH ANY PREAWARD OR POSTAWARD COST DETERMINATIONS WILL BE SUBJECT TO FAR SUBPART 31.2)
31.	DFARS 252.215-7000	PRICING ADJUSTMENTS (DEC 1991) (APPLICABLE IF FAR 52.215-12 APPLIES)
32.	DFARS 252.215-7002	COST ESTIMATING SYSTEM REQUIREMENTS (JUL 1997) (APPLICABLE IF NEGOTIATED - SEE BLOCK 2, SF 1442 - AND CONTRACT AWARD IS MADE ON THE BASIS OF CERTIFIED COST OR PRICING DATA)
33.	FAR 52.219-6	NOTICE OF TOTAL SMALL BUSINESS SET-ASIDE (JUL 1996) (APPLICABLE IF SET ASIDE FOR SMALL BUSINESS - SEE DD FORM 1707)
34.	FAR 52.219-8	UTILIZATION OF SMALL, SMALL DISADVANTAGED AND WOMEN-OWNED SMALL BUSINESS CONCERNS (JUN 1997)
35.	FAR 52.219-16	LIQUIDATED DAMAGES--SUBCONTRACTING PLAN (AUG 1998) (APPLICABLE IF FAR 52.219-9, OR ALTERNATE I OR II, IS APPLICABLE)
36.	DFARS 252.219-7003	SMALL, SMALL DISADVANTAGED AND WOMEN-OWNED SMALL BUSINESS SUBCONTRACTING PLAN (DOD CONTRACTS) (APR 1996) (APPLICABLE IF FAR 52.219-9 IS APPLICABLE)
37.	FAR 52.222-3	CONVICT LABOR (AUG 1996)
38.	FAR 52.222-4	CONTRACT WORK HOURS AND SAFETY STANDARDS ACT-OVERTIME COMPENSATION (JUL 1995)
39.	FAR 52.222-6	DAVIS-BACON ACT (FEB 1995)
40.	FAR 52.222-7	WITHHOLDING OF FUNDS (FEB 1988)
41.	FAR 52.222-8	PAYROLLS AND BASIC RECORDS (FEB 1988)
42.	FAR 52.222-9	APPRENTICES AND TRAINEES (FEB 1988)
43.	FAR 52.222-10	COMPLIANCE WITH COPELAND ACT REQUIREMENTS (FEB 1988)
44.	FAR 52.222-11	SUBCONTRACTS (LABOR STANDARDS) (FEB 1988)
45.	FAR 52.222-12	CONTRACT TERMINATION--DEBARMENT (FEB 1988)

46.	FAR 52.222-13	COMPLIANCE WITH DAVIS-BACON AND RELATED ACT REGULATIONS (FEB 1988)
47.	FAR 52.222-14	DISPUTES CONCERNING LABOR STANDARDS (FEB 1988)
48.	FAR 52.222-15	CERTIFICATION OF ELIGIBILITY (FEB 1988)
49.	FAR 52.222-26	EQUAL OPPORTUNITY (APR 1984)
50.	FAR 52.222-27	AFFIRMATIVE ACTION COMPLIANCE REQUIREMENTS FOR CONSTRUCTION (APR 1984)
51.	FAR 52.222-35	AFFIRMATIVE ACTION FOR DISABLED VETERANS AND VETERANS OF THE VIETNAM ERA (APR 1998)
52.	FAR 52.222-36	AFFIRMATIVE ACTION FOR WORKERS WITH DISABILITIES (JUN 1998)
53.	FAR 52.222-37	EMPLOYMENT REPORTS ON DISABLED VETERANS AND VETERANS OF THE VIETNAM ERA (APR 1998)
54.	FAR 52.223-2	CLEAN AIR AND WATER (APR 1984) (APPLICABLE OVER $100,000 AND THE ANSWER TO SECTION 00600, 52.223-1, IS YES)
55.	FAR 52.223-6	DRUG-FREE WORKPLACE (JAN 1997)
56.	DFARS 252.223-7002	SAFETY PRECAUTIONS FOR AMMUNITION AND EXPLOSIVES (MAY 1994) (APPLICABLE IF EXPLOSIVES ARE USED)
57.	DFARS 252.223-7003	CHANGE IN PLACE OF PERFORMANCE--AMMUNITION AND EXPLOSIVES (DEC 1991) (APPLICABLE IF EXPLOSIVES ARE USED)
58.	FAR 52.225-11	RESTRICTIONS ON CERTAIN FOREIGN PURCHASES (AUG 1998)
59.	DFARS 252.225-7012	PREFERENCE FOR CERTAIN DOMESTIC COMMODITIES (SEP 1997)
60.	FAR 52.226-1	UTILIZATION OF INDIAN ORGANIZATIONS AND INDIAN-OWNED ECONOMIC ENTERPRISES (SEP 1996) (APPLICABLE IF FAR 52.219-9 IS APPLICABLE)
61.	FAR 52.227-1	AUTHORIZATION AND CONSENT (JUL 1995)
62.	FAR 52.227-4	PATENT INDEMNITY--CONSTRUCTION CONTRACTS (APR 1984)
63.	FAR 52.227-11	PATENT RIGHTS--RETENTION BY THE CONTRACTOR (SHORT FORM) (JUN 1997) (APPLICABLE IF NONSTANDARD WORK AND SMALL BUSINESS - SEE FAR 27.304-3)
64.	FAR 52.227-12	PATENT RIGHTS--RETENTION BY THE CONTRACTOR (LONG FORM) (JAN 1997) (APPLICABLE IF NONSTANDARD WORK AND LARGE BUSINESS - SEE FAR 27.304-3)
65.	DFARS 252.227-7000	NON-ESTOPPEL (OCT 1966)

66.	DFARS 252.227-7022	GOVERNMENT RIGHTS (UNLIMITED) (MAR 1979) (APPLICABLE TO CONSTRUCTION INVOLVING DESIGN SERVICES)
67.	DFARS 252.227-7023	DRAWINGS AND OTHER DATA TO BECOME PROPERTY OF GOVERNMENT (MAR 1979) (APPLICABLE TO CONSTRUCTION INVOLVING DESIGN SERVICES)
68.	DFARS 252.227-7024	NOTICE AND APPROVAL OF RESTRICTED DESIGNS (APR 1984) (APPLICABLE TO CONSTRUCTION INVOLVING DESIGN SERVICES)
69.	DFARS 252.227-7033	RIGHTS IN SHOP DRAWINGS (APR 1966)
70.	DFARS 252.227-7034	PATENTS--SUBCONTRACTS (APR 1984)
71.	DFARS 252.227-7039	PATENTS--REPORTING OF SUBJECT INVENTIONS (APR 1990) (APPLICABLE IF FAR 52.227-11 ABOVE IS APPLICABLE)
72.	FAR 52.228-1	BID GUARANTEE (SEP 1996)
73.	FAR 52.228-2	ADDITIONAL BOND SECURITY (OCT 1997)
74.	FAR 52.228-11	PLEDGES OF ASSETS (FEB 1992)
75.	FAR 52.228-15	PERFORMANCE AND PAYMENT BONDS-–CONSTRUCTION (SEP 1996)
76.	FAR 52.229-3	FEDERAL, STATE, AND LOCAL TAXES (JAN 1991)
77.	FAR 52.229-5	TAXES--CONTRACTS PERFORMED IN U.S. POSSESSIONS OR PUERTO RICO (APR 1984)
78.	DFARS 252.231-7000	SUPPLEMENTAL COST PRINCIPLES (DEC 1991)
79.	FAR 52.232-5	PAYMENTS UNDER FIXED-PRICE CONSTRUCTION CONTRACTS (MAY 1997)
80.	FAR 52.232-17	INTEREST (JUN 1996)
81.	FAR 52.232-23 I	ASSIGNMENT OF CLAIMS (JAN 1986)--ALTERNATE I (APR 1984)
82.	FAR 52.233-1	DISPUTES (OCT 1995)
83.	FAR 52.233-3	PROTEST AFTER AWARD (AUG 1996)
84.	FAR 52.236-2	DIFFERING SITE CONDITIONS (APR 1984)
85.	FAR 52.236-3	SITE INVESTIGATION AND CONDITIONS AFFECTING THE WORK (APR 1984)
86.	FAR 52.236-5	MATERIALS AND WORKMANSHIP (APR 1984)
87.	FAR 52.236-6	SUPERINTENDENCE BY THE CONTRACTOR (APR 1984)
88.	FAR 52.236-7	PERMITS AND RESPONSIBILITIES (NOV 1991)

89.	FAR 52.236-8	OTHER CONTRACTS (APR 1984)
90.	FAR 52.236-9	PROTECTION OF EXISTING VEGETATION, STRUCTURES, EQUIPMENT, UTILITIES, AND IMPROVEMENTS (APR 1984)
91.	FAR 52.236-10	OPERATIONS AND STORAGE AREAS (APR 1984)
92.	FAR 52.236-11	USE AND POSSESSION PRIOR TO COMPLETION (APR 1984)
93.	FAR 52.236-12	CLEANING UP (APR 1984)
94.	FAR 52.236-13 I	ACCIDENT PREVENTION (NOV 1991)--ALTERNATE I (NOV 1991)
95.	FAR 52.236-15	SCHEDULES FOR CONSTRUCTION CONTRACTS (APR 1984) (APPLICABLE IF PERFORMANCE PERIOD EXCEEDS 60 DAYS)
96.	FAR 52.236-17	LAYOUT OF WORK (APR 1984)
97.	FAR 52.236-21 I	SPECIFICATIONS AND DRAWINGS FOR CONSTRUCTION (FEB 1997)--ALTERNATE I (APR 1984)
98.	DFARS 252.236-7000	MODIFICATION PROPOSALS--PRICE BREAKDOWN (DEC 1991)
99.	DFARS 252.236-7008	CONTRACT PRICES-BIDDING SCHEDULES (DEC 1991) (APPLICABLE IF THERE ARE UNIT PRICES)
100.	FAR 52.242-13	BANKRUPTCY (JUL 1995)
101.	FAR 52.242-14	SUSPENSION OF WORK (APR 1984)
102.	DFARS 252.242-7000	POSTAWARD CONFERENCE (DEC 1991)
103.	FAR 52.243-4	CHANGES (AUG 1987)
104.	DFARS 252.243-7001	PRICING OF CONTRACT MODIFICATIONS (DEC 1991)
105.	DFARS 252.243-7002	REQUESTS FOR EQUITABLE ADJUSTMENT (MAR 1998)
106.	FAR 52.244-1	SUBCONTRACTS (FIXED-PRICE CONTRACTS) (OCT 1997) (APPLICABLE OVER $500,000)
107.	FAR 52.245-1	PROPERTY RECORDS (APR 1984) (APPLICABLE IF GOVERNMENT-FURNISHED PROPERTY (GFP) IS INVOLVED AND THE GOVERNMENT WILL MAINTAIN OFFICIAL PROPERTY RECORDS-IF THERE IS ANY GFP SECTION 00800 WILL CONTAIN A LIST OF THE GFP)
108.	FAR 52.245-2	GOVERNMENT PROPERTY (FIXED-PRICE CONTRACTS (DEC 1989) (APPLICABLE IF GOVERNMENT-FURNISHED PROPERTY IS INVOLVED WORTH OVER $100,000-SEE SECTION 00800)
109.	FAR 52.245-4	GOVERNMENT-FURNISHED PROPERTY (SHORT FORM) (APR 1984)

	(APPLICABLE IF GOVERNMENT-FURNISHED PROPERTY IS INVOLVED WORTH $100,000 OR LESS - SEE SECTION 00800)
110. DFARS 252.245-7001	REPORTS OF GOVERNMENT PROPERTY (MAY 1994) (APPLICABLE IF FAR 52.245-2 IS APPLICABLE)
111. FAR 52.246-21	WARRANTY OF CONSTRUCTION (MAR 1994) (NOT APPLICABLE TO CONTRACTS SOLELY FOR DREDGING, EXCAVATION, GRUBBING OR CLEARING; EFARS 46.710)

112. DFARS 252.247-7024	NOTIFICATION OF TRANSPORTATION OF SUPPLIES BY SEA (NOV 1995) (APPLICABLE IF THE ANSWER TO SECTION 00600, DFARS 52.247-7022, IS NEGATIVE)
113. FAR 52.248-3	VALUE ENGINEERING--CONSTRUCTION (MAR 1989) (APPLICABLE OVER $100,000)
114. FAR 52.249-1	TERMINATION FOR CONVENIENCE OF THE GOVERNMENT (FIXED-PRICE) (SHORT FORM) (APR 1984) (APPLICABLE $100,000 OR LESS)
115. FAR 52.249-2 I	TERMINATION FOR CONVENIENCE OF THE GOVERNMENT (FIXED-PRICE) (SEP 1996)--ALTERNATE I (SEP 1996) (APPLICABLE OVER $100,000)
116. FAR 52.249-10	DEFAULT (FIXED-PRICE CONSTRUCTION) (APR 1984)
117. FAR 52.253-1	COMPUTER-GENERATED FORMS (JAN 1991)

END OF SECTION

SECTION 00800

SPECIAL CONTRACT REQUIREMENTS

SECTION 00800

SPECIAL CONTRACT REQUIREMENTS

INDEX

1.	FAR 52.204-4	PRINTING/COPYING DOUBLE-SIDED ON RECYCLED PAPER (JUN 1996)
2.	DFARS 252.204-7003	CONTROL OF GOVERNMENT PERSONNEL WORK PRODUCT (APR 1992)
3.	DFARS 252.204-7004	REQUIRED CENTRAL CONTRACTOR REGISTRATION (MAR 1998)
4.	FAR 52.211-10	COMMENCEMENT, PROSECUTION, AND COMPLETION OF WORK (APR 1994)
5.	FAR 52.211-12	LIQUIDATED DAMAGES--CONSTRUCTION (APR 1984)
6.	SAACONS 52.0211.4853	WORK DAYS AND HOURS (APR 1992)
7.	SAACONS 52.0215-4101	ALTERNATE STRUCTURED APPROACH TO WEIGHTED GUIDELINE METHOD FOR CONSTRUCTION CONTRACTS (EFARS 15.973-100) (MAY 1995)
8.	FAR 52.219-9 I	SMALL, SMALL DISADVANTAGED AND WOMEN-OWNED SMALL BUSINESS SUBCONTRACTING PLAN (AUG 1998)--ALTERNATE I (OCT 1995)
9.	FAR 52.219-14	LIMITATIONS ON SUBCONTRACTING (DEC 1996)
10.	FAR 52.219-18	NOTIFICATION OF COMPETITION LIMITED TO ELIGIBLE 8(a) CONCERNS (JAN 1997)--ALTERNATE I (NOV 1989)
11.	DFARS 252.219-7009	SECTION 8(A) DIRECT AWARD (JUN 1998)
12.	SAACONS 52.0219-4509	SUBCONTRACTING WITH SMALL, SMALL DISADVANTAGED AND WOMEN-OWNED SMALL BUSINESSES (JAN 1996)
13.	SAACONS 52.0219-4811	SMALL BUSINESS ADMINISTRATION REQUIREMENT (JUL 1993)
14.	DFARS 252.222-7001	RIGHT OF FIRST REFUSAL OF EMPLOYMENT--CLOSURE OF MILITARY INSTALLATIONS (APR 1993)
15.	FAR 52.223-14	TOXIC CHEMICAL RELEASE REPORTING (OCT 1996)
16.	DFARS 252.223-7004	DRUG-FREE WORK FORCE (SEP 1988)
17.	DFARS 252.223-7006	PROHIBITION ON STORAGE AND DISPOSAL OF TOXIC AND HAZARDOUS MATERIALS (APR 1993)
18.	SAACONS 52.0223-4803	HAZARDOUS MATERIALS DELIVERED UNDER THIS CONTRACT (MAY 1993)
19.	FAR 52.225-5	BUY AMERICAN ACT--CONSTRUCTION MATERIALS (JUN 1997)
20.	DFARS 252.225-7031	SECONDARY ARAB BOYCOTT OF ISRAEL (JUN 1992)
21.	FAR 52.228-5	INSURANCE--WORK ON A GOVERNMENT INSTALLATION (JAN 1997)
22.	SAACONS 52.0228-4502	MINIMUM INSURANCE REQUIRED (MAY 1993)
23.	EFARS 52.231-5000	EQUIPMENT OWNERSHIP AND OPERATING EXPENSE SCHEDULE (MAR 1995)--EFARS
24.	FAR 52.232-27	PROMPT PAYMENT FOR CONSTRUCTION CONTRACTS (JUN 1997)
25.	SAACONS 52.0232-4501	INVOICES (AUG 1991)
26.	FAR 52.236-4	PHYSICAL DATA (APR 1984)
27.	DFARS 252.236-7001	CONTRACT DRAWINGS, MAPS, AND SPECIFICATIONS (DEC 1991)
28.	SAACONS 52.0236-4581	AVAILABILITY OF UTILITIES SERVICES (APR 1992)
29.	SAACONS 52.0236-4801	SALVAGE AND SCRAP GOVERNMENT PROPERTY (OCT 1993)
30.	SAACONS 52.0239-4001	YEAR 2000 COMPLIANCE (Y2K) - CONSTRUCTION CONTRACTS (JUL 1998)
31.	FAR 52.243-7	NOTIFICATION OF CHANGES (APR 1984)
32.	FAR 52.244-2	SUBCONTRACTS (AUG 1998)

33.	FAR 52.246-12	INSPECTION OF CONSTRUCTION (AUG 1996)
34.	DFARS 252.247-7023	TRANSPORTATION OF SUPPLIES BY SEA (NOV 1995)
35.	EFARS 52.249-5000	BASIS FOR SETTLEMENT OF PROPOSALS (DEC 1995)
36.	FAR 52.252-4	ALTERATIONS IN CONTRACT (APR 1984)
37.	FAR 52.252-6	AUTHORIZED DEVIATIONS IN CLAUSES (APR 1984)

SECTION 00800

SPECIAL CONTRACT REQUIREMENTS

1. FAR 52.204-4 PRINTING/COPYING DOUBLE-SIDED ON RECYCLED PAPER (JUN 1996)

(a) In accordance with Executive Order 12873, dated October 20, 1993, as amended by Executive Order 12995, dated March 25, 1996, the Offeror/Contractor is encouraged to submit paper documents, such as offers, letters, or reports, that are printed/copied double-sided on recycled paper that has at least 20% postconsumer material.

(b) The 20% standard applies to high-speed copies paper, offset paper, forms bond, computer printout paper, and carbonless paper, file folders, white woven envelopes, and other uncoated printed and writing paper, such as writing and office paper, book paper, cotton fiber paper, and cover stock. An alternative to meeting the 20 % postconsumer material standard is 50 % recovered material content of certain industrial by-products.

2. DFARS 252.204-7003 CONTROL OF GOVERNMENT PERSONNEL WORK PRODUCT (APR 1992)

The Contractor's procedures for protecting against unauthorized disclosure of information shall not require Department of Defense employees or members of the Armed Forces to relinquish control of their work products, whether classified or not, to the Contractor.

3. DFARS 252.204-7004 REQUIRED CENTRAL CONTRACTOR REGISTRATION (MAR 1998)

(a) *Definitions.*

As used in this clause--

(1) *Central Contractor Registration (CCR) data base* means the primary DoD repository for contractor information required for the conduct of business with DoD.

(2) *Data Universal Numbering System (DUNS) number* means the 9-digit number assigned by Dun and Bradstreet Information Services to identify unique business entities.

(3) *Data Universal Numbering System +4 (DUNS+4) number* means the DUNS number assigned by Dun and Bradstreet plus a 4-digit suffix that may be assigned by a parent (controlling) business concern.

(4) *Registered in the CCR database* means that all mandatory information, including the DUNS number or the DUNS+4 number, if applicable, and the corresponding commercial and Government Entity (CAGE) code, is in the CCR database; the DUNS number and the CAGE code have been validated; and all edits have been successfully completed.

(b)(1) By submission of an offer, the offeror acknowledges the requirement that a prospective awardee must be registered in the CCR database prior to award, during performance, and through final payment of any contract resulting from this solicitation, except for awards to foreign vendors for work to be performed outside the United States.

(2) The offeror shall provide its DUNS or, if applicable, its DUNS+4 number with its offer, which will be used by the Contracting Officer to verify that the offeror is registered in the CCR database.

(3) Lack of registration in the CCR database will make an offeror ineligible for award.

(4) DoD has established a goal of registering an applicant in the CCR database within 48 hours after receipt of a complete and accurate application

via the Internet. However, registration of an applicant submitting an application through a method other than the Internet may take up to 30 days. Therefore, offerors that are not registered should consider applying for registration immediately upon receipt of this solicitation.

(c) The Contractor is responsible for the accuracy and completeness of the data within the CCR, and for any liability resulting from the Government's reliance on inaccurate or incomplete data. To remain registered in the CCR database after the initial registration, the Contractor is required to confirm on an annual basis that its information in the CCR database is accurate and complete.

(d) Offerors and contractors may obtain information on registration and annual confirmation requirements by calling 1-888-227-2423, or via the Internet at http://ccr.edi.disa.mil.

4. FAR 52.211-10 COMMENCEMENT, PROSECUTION, AND COMPLETION OF WORK (APR 1994)

The Contractor shall be required to (a) commence work under this contract within **(10)** calendar days after the date the Contractor receives the notice to proceed, (b) prosecute the work diligently, and (c) complete the entire work ready for use not later than 270 calendar days after receipt of notice to proceed. The time stated for completion shall include final cleanup of the premises.

5. FAR 52.211-12 LIQUIDATED DAMAGES--CONSTRUCTION (APR 1984)

(a) If the Contractor fails to complete the work within the time specified in the contract, or any extension, the Contractor shall pay to the Government as liquidated damages, the sum of $1,080 for each day of delay.

(b) If the Government terminates the Contractor's right to proceed, the resulting damage will consist of liquidated damages until such reasonable time as may be required for final completion of the work together with any increased costs occasioned the Government in completing the work.

(c) If the Government does not terminate the Contractor's right to proceed, the resulting damage will consist of liquidated damages until the work is completed or accepted.

6. SAACONS 52.0211.4853 WORK DAYS AND HOURS (APR 1992)

Contractor will be required to perform the work required on this project within the normal hours of the workweek at Tooele Army Depot. The workweek at Tooele Army Depot is Monday through Thursday, with normal hours from 6:30 a.m. to 5:00 p.m.

The Federal holidays are:

New Year's Day	Labor Day
Martin Luther King Day	Columbus Day
Presidents' Day	Veterans' Day
Memorial Day	Thanksgiving
Independence Day	Christmas

7. SAACONS 52.0215-4101 ALTERNATE STRUCTURED APPROACH TO WEIGHTED GUIDELINE METHOD FOR CONSTRUCTION CONTRACTS (EFARS 15.973-100) (MAY 1995)

The following alternate structured approach shall be used for all fixed-price construction contract actions.

Factor	Rate	Weight	Value
Degree of risk	20		
Relative difficulty of work	15		
Size of job	15		
Period of performance	15		
Contractor's investment	5		
Assistance by Government	5		
Subcontracting	25		
Total	100%		

Based on the circumstances of the procurement action, each of the above factors shall be weighted from .03 to .12 as indicated below. "Value shall be obtained by multiplying the rate by the weight. The Value column when totaled indicates the fair and reasonable profit percentage under the circumstances of the particular procurement. The profit percentage should be multiplied by the total contract costs, including general and administrative costs.

(1) Degree of risk. Where the work involves no risk or the degree of risk is very small, the weighting should be .03; as the degree of risk increases, the weighting should be increased up to a maximum of .12. Lump sum items shall generally have a higher weight than unit price items; other things to consider include the nature of the work and where it is to be performed. Consider the portion of the work to be done by subcontractors, amount and type of labor included in costs, whether the negotiation is before or after performance of the work, etc. Modifications settled before the fact have much greater risk than those settled after the fact. A weight of .03 is appropriate for after the fact equitable adjustments and/or settlements.

(2) Relative Difficulty of Work: If the work is difficult and complex, the weight should be .12 and should be proportionately reduced to .03 on the simplest of jobs. This factor is tied in to some extent with the degree of risk. Some other things to consider are the nature of the work, by whom it is to be done (i.e., subcontractors, consultants), what is the time schedule.

(3) Size of Job. Work of $100,000 or less shall be weighted at .12. Work estimated between $100,000 and $5,000,000 shall be proportionately weighted from .12 to .05. Work from $5,000,000 to $10,000,000 shall be weighted at .04. Work in excess of $10,000,000 shall be weighted at .03. It should be noted that control of fixed expenses generally improves with increased job magnitude.

(4) Period of Performance. Work not to exceed one month is to be proportionately weighted at .03. Work in excess of 24 months is to be weighted at .12. Durations between one month and 24 months are to be proportionately weighted between .03 and .12.

(5) Contractor's Investment. To be weighted from .03 to .12 on the basis of below average, average and above average. Things to consider include amount of subcontracting, Government-furnished property or data such as surveys, soil tests, method of making progress payments, and any mobilization payment items.

(6) Assistance by Government. To be weighted from .12 to .03 on the basis of average to above average. Consider use of Government-owned property, equipment and facilities, and expediting assistance.

(7) Subcontracting. To be weighted inversely proportional to the amount of subcontracting. Where 80% or more of the work is to be subcontracted use .03. The weighting should be increased proportionately to .12 where all the work is performed by the contractor's own forces.

8. FAR 52.219-9 I SMALL, SMALL DISADVANTAGED AND WOMEN-OWNED SMALL BUSINESS SUBCONTRACTING PLAN (AUG 1998)--ALTERNATE I (OCT 1995)

(a) This clause does not apply to small business concerns.

(b) Definitions. As used in this clause--

"Commercial item" means a product or service that satisfies the definition of commercial item in section 2.101 of the Federal Acquisition Regulation.

"Commercial plan" means a subcontracting plan (including goals) that covers the offeror's fiscal year and that applies to the entire production of commercial items sold by either the entire company or a portion thereof (e.g., division, plant, or product line).

"Individual contract plan" means a subcontracting plan that covers the entire contract period (including option periods), applies to a specific contract, and has goals
that are based on the offeror's planned subcontracting in support of the specific contract, except that indirect costs incurred for common or joint purposes may be allocated on a prorated basis to the contract.

"Master plan" means a subcontracting plan that contains all the required elements of an individual contract plan, except goals, and may be incorporated into individual contract plans, provided the master plan has been approved.

"Subcontract" means any agreement (other than one involving an employer-employee relationship) entered into by a Federal Government prime Contractor or subcontractor calling for supplies or services required for performance of the contract or subcontract.

(c) The apparent low bidder, upon request by the Contracting Officer, shall submit a subcontracting plan, where applicable, which separately addresses subcontracting with small business concerns, with small disadvantaged business concerns and with women-owned small business concerns. If the bidder is submitting an individual contract plan, the plan must separately address subcontracting with small business concerns, small disadvantaged business concerns and women-owned small business concerns, with a separate part for the basic contract and separate parts for each option (if any). The plan shall be included in and made a part of the resultant contract. The subcontracting plan shall be submitted within the time specified by the Contracting Officer. Failure to submit the subcontracting plan shall make the bidder ineligible for the award of a contract.

(d) The offeror's subcontracting plan shall include the following:

(1) Goals, expressed in terms of percentages of total planned subcontracting dollars, for the use of small business concerns, small disadvantaged business concerns and women-owned small business concerns as subcontractors. The offeror shall include all subcontracts that contribute to contract performance, and may include a proportionate share of products and services that are normally allocated as indirect costs.

(2) A statement of--

(i) Total dollars planned to be subcontracted for an individual contract plan; or the offeror's total projected sales, expressed in dollars, and the total value of projected subcontracts to support the sales for a commercial plan;

(ii) Total dollars planned to be subcontracted to small business concerns;

(iii) Total dollars planned to be subcontracted to small disadvantaged business concerns; and

(iv) Total dollars planned to be subcontracted to women-owned small business concerns.

(3) A description of the principal types of supplies and services to be subcontracted, and an identification of the types planned for subcontracting to--

(i) Small business concerns,

(ii) Small disadvantaged business concerns, and

(iii) Women-owned small business concerns.

(4) A description of the method used to develop the subcontracting goals in paragraph (d)(1) of this clause.

(5) A description of the method used to identify potential sources for solicitation purposes (e.g., existing company source lists, the Procurement Automated Source System (PASS) of the Small Business Administration, the National Minority Purchasing Council Vendor Information Service, the Research and Information Division of the Minority Business Development Agency in the Department of Commerce, or small, small disadvantaged and women-owned small business concerns trade associations). A firm may rely on the information contained in PASS as an accurate representation of a concern's size and ownership characteristics for purposes of maintaining a small business source list. A firm may rely on PASS as its small business source list. Use of the PASS as its source list does not relieve a firm of its responsibilities (e.g., outreach, assistance, counseling, publicizing subcontracting opportunities) in this clause.

(6) A statement as to whether or not the offeror included indirect costs in establishing subcontracting goals, and a description of the method used to determine the proportionate share of indirect costs to be incurred with--

(i) Small business concerns;

(ii) Small disadvantaged business concerns; and

(iii) Women-owned small business concerns.

(7) The name of the individual employed by the offeror who will administer the offeror's subcontracting program, and a description of the duties of the individual.

(8) A description of the efforts the offeror will make to assure that small, small disadvantaged and women-owned small business concerns have an equitable opportunity to compete for subcontracts.

(9) Assurances that the offeror will include the clause in this contract entitled "Utilization of Small, Small Disadvantaged and Women-Owned Small Business Concerns" in all subcontracts that offer further subcontracting opportunities, and that the offeror will require all subcontractors (except small business concerns) that receive subcontracts in excess of $500,000 ($1,000,000 for construction of any public facility) to adopt a subcontracting plan that complies with the requirements of this clause.

(10) Assurances that the offeror will--

(i) Cooperate in any studies or surveys as may be required;

(ii) Submit periodic reports so that the Government can determine the extent of compliance by the offeror with the subcontracting plan;

(iii) Submit Standard Form (SF) 294, Subcontracting Report for Individual Contracts, and/or SF 295, Summary Subcontract Report, following the instructions on the forms or as provided in agency regulations; and

(iv) Ensure that its subcontractors agree to submit SF 294 and SF 295.

(11) A description of the types of records that will be maintained concerning procedures that have been adopted to comply with the requirements and goals in the plan, including establishing source lists; and a description of the offeror's efforts to locate small, small disadvantaged and women-owned small business concerns and award subcontracts to them. The records shall include at least the following (on a plant-wide or company-wide basis, unless otherwise indicated):

(i) Source lists (e.g., PASS), guides, and other data that identify small, small disadvantaged and women-owned small business concerns.

(ii) Organizations contacted in an attempt to locate sources that are small, small disadvantaged or women-owned small business concerns.

(iii) Records on each subcontract solicitation resulting in an award of more than $100,000, indicating--

(A) Whether small business concerns were solicited and if not, why not;

(B) Whether small disadvantaged business concerns were solicited and if not, why not;

(C) Whether women-owned small business concerns were solicited and if not, why not; and

(D) If applicable, the reason award was not made to a small business concern.

(iv) Records of any outreach efforts to contact--

(A) Trade associations;

(B) Business development organizations; and

(C) Conferences and trade fairs to locate small, small disadvantaged and women-owned small business sources.

(v) Records of internal guidance and encouragement provided to buyers through--

(A) Workshops, seminars, training, etc., and

(B) Monitoring performance to evaluate compliance with the program's requirements.

(vi) On a contract-by-contract basis, records to support award data submitted by the offeror to the Government, including the name, address, and business size of each subcontractor. Contractors having commercial plans need not comply with this requirement.

(e) In order to effectively implement this plan to the extent consistent with efficient contract performance, the Contractor shall perform the following functions:

(1) Assist small, small disadvantaged and women-owned small business concerns by arranging solicitations, time for the preparation of bids, quantities, specifications, and delivery schedules so as to facilitate the participation by such concerns. Where the Contractor's lists of potential small, small disadvantaged and women-owned small business subcontractors are excessively long, reasonable effort shall be made to give all such small business concerns an opportunity to compete over a period of time.

(2) Provide adequate and timely consideration of the potentialities of small, small disadvantaged and women-owned small business concerns in all "make-or-buy" decisions.

(3) Counsel and discuss subcontracting opportunities with representatives of small, small disadvantaged and women-owned small business firms.

(4) Provide notice to subcontractors concerning penalties and remedies for misrepresentations of business status as small, small disadvantaged or women-owned small business for the purpose of obtaining a subcontract that is to be included as part or all of a goal contained in the Contractor's subcontracting plan.

(f) A master plan on a plant or division-wide basis that contains all the elements required by paragraph (d) of this clause, except goals, may be incorporated by reference as a part of the subcontracting plan required of the offeror by this clause; provided--

(1) The master plan has been approved;

(2) The offeror ensures that the master plan is updated as necessary and provides copies of the approved master plan, including evidence of its approval, to the Contracting Officer; and

(3) Goals and any deviations from the master plan deemed necessary by the Contracting Officer to satisfy the requirements of this contract are set forth in the individual subcontracting plan.

(g) A commercial plan is the preferred type of subcontracting plan for contractors furnishing commercial items. The commercial plan shall relate to

the offeror's planned subcontracting generally, for both commercial and Government business, rather than solely to the Government contract. Commercial plans are also preferred for subcontractors that provide commercial items under a prime contract, whether or not the prime contractor is supplying a commercial item.

(h) Prior compliance of the offeror with other such subcontracting plans under previous contracts will be considered by the Contracting Officer in determining the responsibility of the offeror for award of the contract.

(i) The failure of the Contractor or subcontractor to comply in good faith with--

(1) The clause of this contract entitled "Utilization Of Small, Small Disadvantaged and Women-Owned Small Business Concerns;" or

(2) An approved plan required by this clause, shall be a material breach of the contract.

9. FAR 52.219-14 LIMITATIONS ON SUBCONTRACTING (DEC 1996) (APPLICABLE IF SET ASIDE FOR ANY TYPE OF SMALL BUSINESS INCLUDING 8(a))

(a) This clause does not apply to the unrestricted portion of a partial set-aside.

(b) By submission of an offer and execution of a contract, the Offeror/Contractor agrees that in performance of the contract in the case of a contract for--

(1) Services (except construction). At least 50 percent of the cost of contract performance incurred for personnel shall be expended for employees of the concern.

(2) Supplies (other than procurement from a non-manufacturer of such supplies). The concern shall perform work for at least 50 percent of the cost of manufacturing the supplies, not including the cost of materials.

(3) General construction. The concern will perform at least 15 percent of the cost of the contract, not including the cost of materials, with its own employees.

(4) Construction by special trade contractors. The concern will perform at least 25 percent of the cost of the contract, not including the cost of materials, with its own employees.

10. FAR 52.219-18 NOTIFICATION OF COMPETITION LIMITED TO ELIGIBLE 8(a) CONCERNS (JAN 1997)--ALTERNATE I (NOV 1989)

(a) Offers are solicited only from small business concerns expressly certified by the Small Business Administration (SBA) for participation in the SBA's 8(a) Program and which meet the following criteria at the time of submission of offer--

(1) SIC code 1542 is specifically included in the Offeror's approved business plan;

(2) The Offeror is in conformance with the 8(a) support limitation set forth in its approved business plan; and

(3) The Offeror is in conformance with the Business Activity Targets set forth in its approved business plan or any remedial action direct by the SBA.

(4) The Offeror's approved business plan is on the file and serviced by _____(*Contracting Officer completes by inserting the appropriate SBA District and/or Regional Office(s) as identified by the SBA*).

(b) By submission of its offer, the Offeror represents that it meets all of the criteria set forth in paragraph (a) of this clause.

(c) (DFARS 252.219-7010 ALTERNATE A (JUN 1998) Any award resulting from this solicitation will be made directly by the Contracting Officer to the

successful 8(a) offeror selected through the evaluation criteria set forth in this solicitation.

(d)(1) Agreement. A small business concern submitting an offer in its own name agrees to furnish, in performing the contract, only end items manufactured or produced by small business concerns in the United States. The term "United States" includes its territories and possessions, the Commonwealth of Puerto Rico, the trust territory of the Pacific Islands, and the District of Columbia. If this procurement is processed under simplified acquisition procedures and the total amount of this contract does not exceed $25,000, a small business concern may furnish the product of any domestic firm. This subparagraph does not apply in connection with construction or service contracts.

(2) The _____(*insert name of SBA's contractor*) will notify the _____(*insert name of contracting agency*) Contracting Officer in writing immediately upon entering an agreement (either oral or written) to transfer all or part of its stock or other ownership interest to any other party.

11. DFARS 252.219-7009 SECTION 8(A) DIRECT AWARD (JUN 1998)

(a) This contract is issued as a direct award between the contracting office and the 8(a) Contractor pursuant to the Memorandum of Understanding dated May 6, 1998, between the Small Business Administration (SBA) and the Department of Defense. Accordingly, the SBA is not a party to this contract. SBA does retain responsibility for 8(a) certification, for 8(a) eligibility determinations and related issues, and for providing counseling and assistance to the 8(a) Contractor under the 8(a) Program. The cognizant SBA district office is:

_____

_____

_____

_____

[*To be completed by the Contracting Officer at the time of award*]

(b) The contracting office is responsible for administering the contract and for taking any action on behalf of the Government under the terms and conditions of the contract; provided that the contracting office shall give advance notice to the SBA before it issues a final notice terminating performance, either in whole or in part, under the contract. The contracting office also shall coordinate with the SBA prior to processing any novation agreement. The contracting office may assign contract administration functions to a contract administration office.

(c) The Contractor agrees that--

(1) It will notify the Contracting Officer, simultaneous with its notification to the SBA (as required by SBA's 8(a) regulations at 13 CFR 124.308), when the owner or owners upon whom 8(a) eligibility is based plan to relinquish ownership or control of the concern. Consistent with Section 407 of Pub. L. 100-656, transfer of ownership or control shall result in termination of the contract for convenience, unless the SBA waives the requirement for termination prior to the actual relinquishing of ownership and control; and

(2) It will not subcontract the performance of any of the requirements of this contract without the prior written approval of the SBA and the Contracting Officer.

12. SAACONS 52.0219-4509 SUBCONTRACTING WITH SMALL, SMALL DISADVANTAGED AND WOMEN-OWNED SMALL BUSINESSES (JAN 1996)

Contractors are cautioned that failure of any Contractor to comply in good faith with the Contract Clauses titled (1) Utilization of Small, Small Disadvantaged and Women-Owned Small Business Concerns or (2) Small, Small Disadvantaged and Women-Owned Small Business Subcontracting Plan, when applicable, will be a material breach of contract. In order to assist contractors in developing a source list of small, small disadvantaged and/or women-owned small business concerns you are encouraged to contact your minority contractor associates, the local Minority Business Development Agency and the appropriate General Business Service Centers in your Standard Metropolitan Statistical Area. Contractors may obtain addresses of these sources from:

Write: US Army Engineer District, Sacramento
ATTN: Contracting Division, Deputy for Small Business
1325 J Street, 8th Floor
Sacramento, California 95814-2922

Or Contact: Mr. John Szabo
Deputy for Small Business
Telephone: (916) 557-5202

13. SAACONS 52.0219-4811 SMALL BUSINESS ADMINISTRATION REQUIREMENT (JUL 1993) (APPLICABLE IF 8(a) SET-ASIDE)

A copy of the acceptance document and a copy of the final payment document will be provided to the Small Business Administration (SBA).

14. DFARS 252.222-7001 RIGHT OF FIRST REFUSAL OF EMPLOYMENT--CLOSURE OF MILITARY INSTALLATIONS (APR 1993)

(a) The Contractor shall give Government employees, who have been or will be adversely affected by closure of the military installation where this contract will be performed, the right of first refusal for employment openings under the contract. This right applies to positions for which the employee is qualified, if consistent with post-Government employment conflict of interest standards.

(b) Government personnel seeking preference under this clause shall provide the Contractor with evidence of eligibility from the Government personnel office.

15. FAR 52.223-14 TOXIC CHEMICAL RELEASE REPORTING (OCT 1996)

(a) Unless otherwise exempt, the Contractor as owner or operator of a facility used in the performance of this contract shall file by July 1 for the prior calendar year an annual Toxic Chemical Release Inventory Form (Form R) as described in sections 313(a) and (g) of the Emergency Planning and Community Right-to-Know Act of 1986 (EPCRA)(42 U.S.C. 11023(a) and (g)), and section 6607 of the Pollution Prevention Act of 1990 (PPA) (42 U.S.C. 13106). The Contractor shall file, for each facility subject to the Form R filing and reporting requirements, the annual Form R throughout the life of the contract.

(b) A Contractor owned or operated facility used in the performance of this contract is exempt from the requirement to file an annual Form R if --

(1) The facility does not manufacture, process, or otherwise use any toxic chemicals listed under section 313(c) of EPCRA, 42 U.S.C. 11023(c);

(2) The facility does not have 10 or more full-time employees as specified in section 313(b)(1)(A) of EPCRA, 42 U.S.C. 11023(b)(1)(A);

(3) The facility does not meet the reporting thresholds of toxic chemicals established under section 313(f) of EPCRA, 42 U.S.C. 11023(f) (including the alternate thresholds at 40 CFR 372.27, provided an appropriate certification form has been filed with EPA);

(4) The facility does not fall within Standard Industrial Classification Code (SIC) designations 20 through 39 as set forth in 19.102 of the Federal Acquisition Regulation (FAR); or

(5) The facility is not located within any State of the United States, the District of Columbia, the Commonwealth of Puerto Rico, Guam, American Samoa, the United States Virgin Islands, the Northern Mariana Islands, or any other territory or possession over which the United States has jurisdiction.

(c) If the Contractor has certified to be exempt in accordance with one or more of the criteria in paragraph (b) of this clause, and after award of the contract circumstances change so that any one of its owned or operated facilities used in the performance of this contract is no longer exempt--

(1) The Contractor shall notify the Contracting Officer, and

(2) The Contractor, as owner or operator of a facility used in the performance of this contract that is no longer exempt, shall (i) submit a Toxic Chemical Release Inventory Form (Form R) on or before July 1 for the prior calendar year during which the Contractor becomes eligible; and (ii) continue to file the annual Form R for the life of the contract for such facility.

(d) The Contracting Officer may terminate this contract or take other action as appropriate, if the Contractor fails to comply accurately and fully with the EPCRA and PPA toxic chemical release filing and reporting requirements.

(e) Except for acquisitions for commercial items, as defined in FAR Part 2, the Contractor shall--

(1) For competitive subcontracts expected to exceed $100,000 (including all options), include a solicitation provision substantially the same as the provision at FAR 52.223-13, Certification of Toxic Chemical Release Reporting; and

(2) Include in any resultant subcontract exceeding $100,000 (including all options), the substance of this clause, except this paragraph (e).

16. DFARS 252.223-7004 DRUG-FREE WORK FORCE (SEP 1988)

(a) Definitions.

(1) "Employee in a sensitive position," as used in this clause, means an employee who has been granted access to classified information; or employees in other positions that the Contractor determines involve national security, health or safety, or functions other than the foregoing requiring a high degree of trust and confidence.

(2) "Illegal drugs," as used in this clause, means controlled substances included in Schedules I and II, as defined by section 802(6) of Title 21 of the United States Code, the possession of which is unlawful under Chapter 13 of that Title. The term "illegal drugs" does not mean the use of a controlled substance pursuant to a valid prescription or other uses authorized by law.

(b) The Contractor agrees to institute and maintain a program for achieving the objective of a drug-free work force. While this clause defines criteria for such a program, contractors are encouraged to implement alternative approaches comparable to the criteria in paragraph (c) that are designed to achieve the objectives of this clause.

(c) Contractor programs shall include the following, or appropriate alternatives:

(1) Employee assistance programs emphasizing high level direction, education, counseling, rehabilitation, and coordination with available community resources;

(2) Supervisory training to assist in identifying and addressing illegal drug use by Contractor employees;

(3) Provisions for self-referrals as well as supervisory referrals to treatment with maximum respect for individual confidentiality consistent with safety and security issues;

(4) Provision for identifying illegal drug users, including testing on a controlled and carefully monitored basis. Employee drug testing programs shall be established taking account of the following:

(i) The Contractor shall establish a program that provides for testing for the use of illegal drugs by employees in sensitive positions. The extent of and criteria for such testing shall be determined by the Contractor based on considerations that include the nature of the work being performed under the contract, the employee's duties, the efficient use of Contractor resources, and the risks to health, safety, or national security that could result from the failure of an employee adequately to discharge his or her position.

(ii) In addition, the Contractor may establish a program for employee drug testing--

(A) When there is a reasonable suspicion that an employee uses illegal drugs; or

(B) When an employee has been involved in an accident or unsafe practice;

(C) As part of or as a follow-up to counseling or rehabilitation for illegal drug use;

(D) As part of a voluntary employee drug testing program

(iii) The Contractor may establish a program to test applicants for employment for illegal drug use.

(iv) For the purpose of administering this clause, testing for illegal drugs may be limited to those substances for which testing is prescribed by section 2.1 of Subpart B of the "Mandatory Guidelines for Federal Workplace Drug Testing Programs" (53FR 11980 (April 11, 1988)), issued by the Department of Health and Human Services.

(d) Contractors shall adopt appropriate personnel procedures to deal with employees who are found to be using drugs illegally. Contractors shall not allow any employee to remain on duty or perform in a sensitive position who is found to use illegal drugs until such time as the Contractor, in accordance with procedures established by the Contractor, determines that the employee may perform in such a position.

(e) The provisions of this clause pertaining to drug testing programs shall not apply to the extent they are inconsistent with state or local law, or with an existing collective bargaining agreement; provided that with respect to the latter, the Contractor agrees that those issues that are in conflict will be a subject of negotiation at the next collective bargaining session.

17. DFARS 252.223-7006 PROHIBITION ON STORAGE AND DISPOSAL OF TOXIC AND HAZARDOUS MATERIALS (APR 1993)

(a) Definitions. As used in this clause--

(1) "Storage" means a non-transitory, semi-permanent or permanent holding, placement, or leaving of material. It does not include a temporary accumulation of a limited quantity of a material used in or a waste generated or resulting from authorized activities, such as servicing, maintenance, or repair of Department of Defense (DoD) items, equipment, or facilities.

(2) "Toxic or hazardous materials" means:

(i) Materials referred to in section 101(14) of the Comprehensive Environmental Response, Compensation, and Liability Act (CERCLA) of 1980 (42 U.S.C. 9601(14)) and materials designated under section 102 of CERCLA (42. U.S.C. 9602 (40 CFR Part 302);

(ii) Materials that are of an explosive, flammable, or pyrotechnic nature; or

(iii) Materials otherwise identified by the Secretary of Defense as specified in DoD regulations.

(b) In accordance with 10 U.S.C. 2692, the Contractor is prohibited from storing or disposing of non-DoD-owned toxic or hazardous materials on a DoD installation, except to the extent authorized by a statutory exception to 10 U.S.C. 2692 or as authorized by the Secretary of Defense or his designee.

18. SAACONS 52.0223-4803 HAZARDOUS MATERIALS DELIVERED UNDER THIS CONTRACT (MAY 1993)

(a) If any hazardous materials will be delivered under this contract (see Section 00600, FAR 52.223-3, and DFARS 252.223-7001), the Material Safety Data Sheets (MSDS) for locally purchased, nonstandard stock hazardous material will be submitted to the Corps of Engineers Contracting Officer or Contracting Officer's Representative. For all other materials, the MSDS will also be submitted to U.S. Army Environmental Hygiene Agency, ATTN: HSE-OI, Aberdeen Proving Grounds MD 21010.

(b) Hazardous material is defined in Federal Standard No. 313, sold by the General Services Administration Specifications Unit (3FBP-W), 7th & D Streets, SW, Washington DC 20407.

19. FAR 52.225-5 BUY AMERICAN ACT--CONSTRUCTION MATERIALS (JUN 1997)

(a) *Definitions*. As used in this clause--

"Components" means those articles, materials, and supplies incorporated directly into construction materials.

"Construction material" means an article, material, or supply brought to the construction site for incorporation into the building or work. Construction material also includes an item brought to the site pre-assembled from articles, materials or supplies. However, emergency life safety systems, such as emergency lighting, fire alarm, and audio evacuation systems, which are discrete systems incorporated into a public building or work and which are produced as a complete system, shall be evaluated as a single and distinct construction material regardless of when or how the individual parts or components of such systems are delivered to the construction site.

"Domestic construction material" means (1) an unmanufactured construction material mined or produced in the United States, or (2) a construction material manufactured in the United States, if the cost of its components mined, produced, or manufactured in the United States exceeds 50 percent of the cost of all its components. Components of foreign origin of the same class or kind as the construction materials determined to be unavailable pursuant to subparagraph 25.202(a)(2) of the Federal Acquisition Regulation (FAR) shall be treated as domestic.

(b)(1) The Buy American Act (41 U.S.C. 10a-10d) requires that only domestic construction material be used in performing this contract, except as provided in paragraphs (b)(2) and (b)(3) of this clause.

(2) This requirement does not apply to the excepted construction material or components listed by the Government as follows:

None

[List applicable excepted materials or indicate "None"]

(3) Other foreign construction material may be added to the list in paragraph (b)(2) of this clause if the Government determines that--

(i) The cost would be unreasonable (the cost of a particular domestic construction material shall be determined to be unreasonable when the cost of such material exceeds the cost of foreign material by more than 6 percent, unless the agency head determines a higher percentage to be appropriate);

(ii) The application of the restriction of the Buy American Act to a particular construction material would be impracticable or inconsistent with the public interest; or

(iii) The construction material is not mined, produced, or manufactured in the United States in sufficient and reasonably available commercial quantities of a satisfactory quality.

(4) The Contractor agrees that only domestic construction material will be used by the Contractor, subcontractors, material men, and suppliers in the performance of this contract, except for foreign construction materials, if any, listed in paragraph (b)(2) of this clause.

(c) *Request for determination*.

(1) Contractors requesting to use foreign construction material under paragraph (b)(3) of this clause shall provide adequate information for Government evaluation of the request for a determination regarding the inapplicability of the Buy American Act. Each submission shall include a description of the foreign and domestic construction materials, including unit of measure, quantity, price, time of delivery or availability, location of the construction project, name and address of the proposed contractor, and a detailed justification of the reason for use of foreign materials cited in accordance with paragraph (b)(3) of this clause. A submission based on unreasonable cost shall include a reasonable survey of the market and a completed price comparison table in the format in paragraph (d) of this clause. The price of construction material shall include all delivery costs to the construction site and any applicable duty (whether or not a duty-free certificate may be issued).

(2) If the Government determines after contract award that an exception to the Buy American Act applies, the contract shall be modified to allow use of the foreign construction material, and adequate consideration shall be negotiated. However, when the basis for the exception is the unreasonable price of a domestic construction material, adequate consideration shall not be less than the differential established in paragraph (b)(3)(i) of this clause.

(3) If the Government does not determine that an exception to the Buy American Act applies, the use of that particular foreign construction material will be a failure to comply with the Act.

(d) For evaluation of requests under paragraph (c) of this clause based on unreasonable cost, the following information and any applicable supporting data based on the survey of suppliers shall be included in the request:

FOREIGN AND DOMESTIC CONSTRUCTION
MATERIALS PRICE COMPARISON

CONSTRUCTION MATERIAL DESCRIPTION	UNIT OF MEASURE	QUANTITY	PRICE (DOLLARS)*
Item 1:			
Foreign construction material	_____	_____	_____
Domestic construction			

material	_____	_____	_____
Item 2: Foreign construction material	_____	_____	_____
Domestic construction material	_____	_____	_____

[List name, address telephone number, and contact for suppliers surveyed. Attach copy of response; if oral, attach summary.]
[Include other applicable supporting information.]
*[*Include all delivery costs to the construction site and any applicable duty (whether or not a duty-free entry certificate is issued).]*

20. DFARS 252.225-7031 SECONDARY ARAB BOYCOTT OF ISRAEL (JUN 1992)

(A) Definitions.
As used in this clause--
"Foreign Person" means any person other than a United States person as defined in Section 16(2) of the Export Administration Act of 1979 (50 U.S.C. APP. SEC 2415).
"United States Person" is defined in Section 16(2) of the Export Administration Act of 1979 and means any United States resident or national (other than an individual resident outside the United States and employed by other than a United States person), any domestic concern (including any permanent domestic establishment of any foreign concern), and any foreign subsidiary or affiliate (including any permanent foreign establishment) of any domestic concern which is controlled in fact by such domestic concern, as determined under regulations of the President.
(B) Certification.
By submitting this offer, the offeror, if a foreign person, company or entity, certifies that it--
(1) Does not comply with the secondary Arab boycott of Israel; and
(2) Is not taking or knowingly agreeing to take any action, with respect to the secondary boycott of Israel by Arab countries, which 50 U.S.C. APP. SEC 2407(A) prohibits a United States person from taking.

21. FAR 52.228-5 INSURANCE--WORK ON A GOVERNMENT INSTALLATION (JAN 1997)

(a) The Contractor shall, at its own expense, provide and maintain during the entire performance of this contract, at least the kinds and minimum amounts of insurance required in the Schedule or elsewhere in the contract.
(b) Before commencing work under this contract, the Contractor shall certify to the Contracting Officer in writing that the required insurance has been obtained. The policies evidencing required insurance shall contain an endorsement to the effect that any cancellation or any material change adversely affecting the Government's interest shall not be effective (1) for such period as the laws of the State in which this contract is to be performed prescribe, or (2) until 30 days after the insurer or the Contractor gives written notice to the Contracting Officer, whichever period is longer.
(c) The Contractor shall insert the substance of this clause, including this paragraph (c), in subcontracts under this contract that require work on a Government installation and shall require subcontractors to provide and maintain the insurance required in the Schedule or elsewhere in the contract. The Contractor shall maintain a copy of all subcontractors' proofs of required

insurance, and shall make copies available to the Contracting Officer upon request.

22. SAACONS 52.0228-4502 MINIMUM INSURANCE REQUIRED (MAY 1993)

The contract clause, FAR 52.228-5, applies to this contract even if the work or any portion of the work is not performed on a Government installation. In accordance with FAR 52.228-5 and FAR 28.307-2, the contractor shall procure and thereafter maintain during the entire period of this performance under this contract the following minimum insurance.

TYPE	AMOUNT
Worker's Compensation and Employer's Liability	Comply with Federal and State worker's comp and occupational disease statutes. Employer's liability of at least $100,000
General Liability (Comprehensive)	Bodily injury liability of at least $500,000 per occurrence.
Automobile Liability (Comprehensive):	
Bodily Injury & Property Damage	At least $200,000 per person and $500,000 per occurrence. At least $20,000 per occurrence.
Longshoremen's and Harbor Worker's Compensation (When applicable by location of contract performance)	Coverage complying with applicable Federal statute (33 USC 901 et seq).

23. EFARS 52.231-5000 EQUIPMENT OWNERSHIP AND OPERATING EXPENSE SCHEDULE (MAR 1995)--EFARS

(a) This statement shall become operative only for negotiated contracts where cost or pricing data is requested, and for modifications to sealed bid or negotiated contracts where cost or pricing data is requested. This clause does not apply to terminations. See 52.249-5000, Basis for Settlement of Proposals, and FAR Part 49.

(b) Allowable cost for CONSTRUCTION and marine plant and equipment in sound workable condition owned or controlled and furnished by a contractor or subcontractor at any tier shall be based on actual cost data for each piece of equipment or groups of similar serial and series for which the Government can determine both ownership and operating costs from the contractor's accounting records. When both ownership and operating costs cannot be determined for any piece of equipment or groups of similar serial or series equipment from the contractor's accounting records, costs for that equipment shall be based upon the applicable provisions of EP 1110-1-8, CONSTRUCTION Equipment Ownership and Operating Expense Schedule, Region VII. Working conditions shall be considered to be average for determining equipment rates using the schedule unless specified otherwise by the contracting officer. For equipment not included in the schedule, rates for comparable pieces of equipment may be used or a rate may be developed using the formula provided in the schedule. For forward pricing, the schedule in effect at the time of negotiations shall

apply. For retroactive pricing, the schedule in effect at the time the work was performed shall apply.

(c) Equipment rental costs are allowable, subject to the provisions of FAR 31.105(d)(ii) and FAR 31.205-36. Rates for equipment rented from an organization under common control, lease-purchase arrangements, and sale-leaseback arrangements, will be determined using the schedule, except that actual rates will be used for equipment leased from an organization under common control that has an established practice of leasing the same or similar equipment to unaffiliated lessees.

(d) When actual equipment costs are proposed and the total amount of the pricing action exceeds the small purchase threshold, the contracting officer shall request the contractor to submit either certified cost or pricing data, or partial/limited data, as appropriate. The data shall be submitted on Standard Form 1411, Contract Pricing Proposal Cover Sheet.

NOTE: See also, Specification Section 01505. A copy of the EP 1110-1-8 is available for review in the Corps of Engineers, Sacramento District Office, 1325 J Street, Library, 8th floor, telephone (916) 557-6657. Copies are available for a nominal charge from the Government Printing Office, telephone (202) 512-1800.

24. FAR 52.232-27 PROMPT PAYMENT FOR CONSTRUCTION CONTRACTS (JUN 1997)

Notwithstanding any other payment terms in this contract, the Government will make invoice payments and contract financing payments under the terms and conditions specified in this clause. Payment shall be considered as being made on the day a check is dated or the date of an electronic funds transfer. Definitions of pertinent terms are set forth in section 32.902 of the Federal Acquisition Regulation. All days referred to in this clause are calendar days, unless otherwise specified. (However, see subparagraph (a)(3) concerning payments due on Saturdays, Sundays, and legal holidays.)

(a) *Invoice payments*--

(1) *Types of invoice payments*. For purposes of this clause, there are several types of invoice payments that may occur under this contract, as follows:

(i) Progress payments, if provided for elsewhere in this contract, based on Contracting Officer approval of the estimated amount and value of work or services performed, including payments for reaching milestones in any project:

(A) The due date for making such payments shall be 25 days after receipt of the payment request by the designated billing office. If the designated billing office fails to annotate the payment request with the actual date of receipt at the time of receipt, the payment due date shall be the 25th day after the date of the Contractor's payment request, provided a proper payment request is received and there is no disagreement over quantity, quality, or Contractor compliance with contract requirements.

(B) The due date for payment of any amounts retained by the Contracting Officer in accordance with the clause at 52.232-5, Payments Under Fixed-Price Construction Contracts, shall be as specified in the contract or, if not specified, 30 days after approval for release to the Contractor by the Contracting Officer.

(ii) Final payments based on completion and acceptance of all work and presentation of release of all claims against the Government arising by virtue of the contract, and payments for partial deliveries that have been accepted by the Government (*e.g.*, each separate building, public work, or other division of the contract for which the price is stated separately in the contract):

(A) The due date for making such payments shall be either the 30th day after receipt by the designated billing office of a proper invoice from the Contractor, or the 30th day after Government acceptance of the work or services completed by the Contractor, whichever is later. If the designated billing office fails to annotate the invoice with the date of actual receipt at the time of receipt, the invoice payment due date shall be the 30th day after the date of the Contractor's invoice, provided a proper invoice is received and there is no disagreement over quantity, quality, or Contractor compliance with contract requirements.

(B) On a final invoice where the payment amount is subject to contract settlement actions (*e.g.*, release of claims), acceptance shall be deemed to have occurred on the effective date of the contract settlement.

(2) *Contractor's invoice*. The Contractor shall prepare and submit invoices to the designated billing office specified in the contract. A proper invoice must include the items listed in subdivisions (a)(2)(i) through (a)(2)(ix) of this clause. If the invoice does not comply with these requirements, it shall be returned within 7 days after the date the designated billing office received the invoice, with a statement of the reasons why it is not a proper invoice. Untimely notification will be taken into account in computing any interest penalty owed the Contractor in the manner described in subparagraph (a)(4) of this clause.

(i) Name and address of the Contractor.

(ii) Invoice date. (The Contractor is encouraged to date invoices as close as possible to the date of mailing or transmission.)

(iii) Contract number or other authorization for work or services performed (including order number and contract line item number).

(iv) Description of work or services performed.

(v) Delivery and payment terms (*e.g.*, prompt payment discount terms).

(vi) Name and address of Contractor official to whom payment is to be sent (must be the same as that in the contract or in a proper notice of assignment).

(vii) Name (where practicable), title, phone number, and mailing address of person to be notified in the event of a defective invoice.

(viii) For payments described in subdivision (a)(1)(i) of this clause, substantiation of the amounts requested and certification in accordance with the requirements of the clause at 52.232-5, Payments Under Fixed-Price Construction Contracts.

(ix) Any other information or documentation required by the contract.

(x) While not required, the Contractor is strongly encouraged to assign an identification number to each invoice.

(3) *Interest penalty*. An interest penalty shall be paid automatically by the designated payment office, without request from the Contractor, if payment is not made by the due date and the conditions listed in subdivisions (a)(3)(i) through (a)(3)(iii) of this clause are met, if applicable. However, when the due date falls on a Saturday, Sunday, or legal holiday when Federal Government offices are closed and Government business is not expected to be conducted, payment may be made on the following business day without incurring a late payment interest penalty.

(i) A proper invoice was received by the designated billing office.

(ii) A receiving report or other Government documentation authorizing payment was processed and there was no disagreement over quantity, quality, Contractor compliance with any contract term or condition, or requested progress payment amount.

(iii) In the case of a final invoice for any balance of funds due the Contractor for work or services performed, the amount was not subject to further contract settlement actions between the Government and the Contractor.

(4) *Computing penalty amount*. The interest penalty shall be at the rate established by the Secretary of the Treasury under section 12 of the Contract

Disputes Act of 1978 (41 U.S.C. 611) that is in effect on the day after the due date, except where the interest penalty is prescribed by other governmental authority (*e.g.*, tariffs). This rate is referred to as the "Renegotiation Board Interest Rate," and it is published in the *Federal Register* semiannually on or about January 1 and July 1. The interest penalty shall accrue daily on the invoice principal payment amount approved by the Government until the payment date of such approved principal amount; and will be compounded in 30-day increments inclusive from the first day after the due date through the payment date. That is, interest accrued at the end of any 30-day period will be added to the approved invoice principal payment amount and will be subject to interest penalties if not paid in the succeeding 30-day period. If the designated billing office failed to notify the Contractor of a defective invoice within the periods prescribed in subparagraph (a)(2) of this clause, the due date on the corrected invoice will be adjusted by subtracting from such date the number of days taken beyond the prescribed notification of defects period. Any interest penalty owed the Contractor will be based on this adjusted due date. Adjustments will be made by the designated payment office for errors in calculating interest penalties.

(i) For the sole purpose of computing an interest penalty that might be due the Contractor for payments described in subdivision (a)(1)(ii) of this clause, Government acceptance or approval shall be deemed to have occurred constructively on the 7th day after the Contractor has completed the work or services in accordance with the terms and conditions of the contract. In the event that actual acceptance or approval occurs within the constructive acceptance or approval period, the determination of an interest penalty shall be based on the actual date of acceptance or approval. Constructive acceptance or constructive approval requirements do not apply if there is a disagreement over quantity, quality, or Contractor compliance with a contract provision. These requirements also do not compel Government officials to accept work or services, approve Contractor estimates, perform contract administration functions, or make payment prior to fulfilling their responsibilities.

(ii) The following periods of time will not be included in the determination of an interest penalty:

(A) The period taken to notify the Contractor of defects in invoices submitted to the Government, but this may not exceed 7 days.

(B) The period between the defects notice and resubmission of the corrected invoice by the Contractor.

(C) For incorrect electronic funds transfer (EFT) information, in accordance with the EFT clause of this contract.

(iii) Interest penalties will not continue to accrue after the filing of a claim for such penalties under the clause at 52.233-1, Disputes, or for more than 1 year. Interest penalties of less than $1 need not be paid.

(iv) Interest penalties are not required on payment delays due to disagreement between the Government and the Contractor over the payment amount or other issues involving contract compliance, or on amounts temporarily withheld or retained in accordance with the terms of the contract. Claims involving disputes, and any interest that may be payable, will be resolved in accordance with the clause at 52.233-1, Disputes.

(5) *Prompt payment discounts*. An interest penalty also shall be paid automatically by the designated payment office, without request from the Contractor, if a discount for prompt payment is taken improperly. The interest penalty will be calculated on the amount of discount taken for the period beginning with the first day after the end of the discount period through the date when the Contractor is paid.

(6) *Additional interest penalty*. (i) A penalty amount, calculated in accordance with subdivision (a)(6)(iii) of this clause, shall be paid in addition to the interest penalty amount if the Contractor--

(A) Is owed an interest penalty of $1 or more;

(B) Is not paid the interest penalty within 10 days after the date the invoice amount is paid; and

(C) Makes a written demand to the designated payment office for additional penalty payment, in accordance with subdivision (a)(6)(ii) of this clause, postmarked not later than 40 days after the date the invoice amount is paid.

(ii)(A) Contractors shall support written demands for additional penalty payments with the following data. No additional data shall be required. Contractors shall--

(*1*) Specifically assert that late payment interest is due under a specific invoice, and request payment of all overdue late payment interest penalty and such additional penalty as may be required;

(*2*) Attach a copy of the invoice on which the unpaid late payment interest was due; and

(*3*) State that payment of the principal has been received, including the date of receipt.

(B) Demands must be postmarked on or before the 40th day after payment was made, except that--

(*1*) If the postmark is illegible or nonexistent, the demand must have been received and annotated with the date of receipt by the designated payment office on or before the 40th day after payment was made; or

(*2*) If the postmark is illegible or nonexistent and the designated payment office fails to make the required annotation, the demand's validity will be determined by the date the Contractor has placed on the demand; provided such date is no later than the 40th day after payment was made.

(iii)(A) The additional penalty shall be equal to 100 percent of any original late payment interest penalty except--

(*1*) The additional penalty shall not exceed $5,000;

(*2*) The additional penalty shall never be less than $25; and

(*3*) No additional penalty is owed if the amount of the underlying interest penalty is less than $1.

(B) If the interest penalty ceases to accrue in accordance with the limits stated in subdivision (a)(4)(iii) of this clause, the amount of the additional penalty shall be calculated on the amount of interest penalty that would have accrued in the absence of these limits, subject to the overall limits on the additional penalty specified in subdivision (a)(6)(iii)(A) of this clause.

(C) For determining the maximum and minimum additional penalties, the test shall be the interest penalty due on each separate payment made for each separate contract. The maximum and minimum additional penalty shall not be based upon individual invoices unless the invoices are paid separately. Where payments are consolidated for disbursing purposes, the maximum and minimum additional penalty determination shall be made separately for each contract therein.

(D) The additional penalty does not apply to payments regulated by other Government regulations (*e.g.*, payments under utility contracts subject to tariffs and regulation).

(b) *Contract financing payments*--(1) *Due dates for recurring financing payments*. If this contract provides for contract financing, requests for payment shall be submitted to the designated billing office as specified in this contract or as directed by the Contracting Officer. Contract financing payments shall be made on the [*insert day as prescribed by Agency head; if not prescribed, insert 30th day*] day after receipt of a proper contract financing request by the designated billing office. In the event that an audit or other review of a specific financing request is required to ensure compliance with

the terms and conditions of the contract, the designated payment office is not compelled to make payment by the due date specified.

(2) *Due dates for other contract financing*. For advance payments, loans, or other arrangements that do not involve recurring submissions of contract financing requests, payment shall be made in accordance with the corresponding contract terms or as directed by the Contracting Officer.

(3) *Interest penalty not applicable*. Contract financing payments shall not be assessed an interest penalty for payment delays.

(c) *Subcontract clause requirements*. The Contractor shall include in each subcontract for property or services (including a material supplier) for the purpose of performing this contract the following:

(1) *Prompt payment for subcontractors*. A payment clause that obligates the Contractor to pay the subcontractor for satisfactory performance under its subcontract not later than 7 days from receipt of payment out of such amounts as are paid to the Contractor under this contract.

(2) *Interest for subcontractors*. An interest penalty clause that obligates the Contractor to pay to the subcontractor an interest penalty for each payment not made in accordance with the payment clause--

(i) For the period beginning on the day after the required payment date and ending on the date on which payment of the amount due is made; and

(ii) Computed at the rate of interest established by the Secretary of the Treasury, and published in the *Federal Register*, for interest payments under section 12 of the Contract Disputes Act of 1978 (41 U.S.C. 611) in effect at the time the Contractor accrues the obligation to pay an interest penalty.

(3) *Subcontractor clause flowdown*. A clause requiring each subcontractor to include a payment clause and an interest penalty clause conforming to the standards set forth in subparagraphs (c)(1) and (c)(2) of this clause in each of its subcontracts, and to require each of its subcontractors to include such clauses in their subcontracts with each lower-tier subcontractor or supplier.

(d) *Subcontract clause interpretation*. The clauses required by paragraph (c) of this clause shall not be construed to impair the right of the Contractor or a subcontractor at any tier to negotiate, and to include in their subcontract, provisions that--

(1) *Retainage permitted*. Permit the Contractor or a subcontractor to retain (without cause) a specified percentage of each progress payment otherwise due to a subcontractor for satisfactory performance under the subcontract without incurring any obligation to pay a late payment interest penalty, in accordance with terms and conditions agreed to by the parties to the subcontract, giving such recognition as the parties deem appropriate to the ability of a subcontractor to furnish a performance bond and a payment bond;

(2) *Withholding permitted*. Permit the Contractor or subcontractor to make a determination that part or all of the subcontractor's request for payment may be withheld in accordance with the subcontract agreement; and

(3) *Withholding requirements*. Permit such withholding without incurring any obligation to pay a late payment penalty if--

(i) A notice conforming to the standards of paragraph (g) of this clause previously has been furnished to the subcontractor; and

(ii) A copy of any notice issued by a Contractor pursuant to subdivision (d)(3)(i) of this clause has been furnished to the Contracting Officer.

(e) *Subcontractor withholding procedures*. If a Contractor, after making a request for payment to the Government but before making a payment to a subcontractor for the subcontractor's performance covered by the payment request, discovers that all or a portion of the payment otherwise due such subcontractor is subject to withholding from the subcontractor in accordance with the subcontract agreement, then the Contractor shall--

(1) *Subcontractor notice*. Furnish to the subcontractor a notice conforming to the standards of paragraph (g) of this clause as soon as practicable upon ascertaining the cause giving rise to a withholding, but prior to the due date for subcontractor payment;

(2) *Contracting Officer notice*. Furnish to the Contracting Officer, as soon as practicable, a copy of the notice furnished to the subcontractor pursuant to subparagraph (e)(1) of this clause;

(3) *Subcontractor progress payment reduction*. Reduce the subcontractor's progress payment by an amount not to exceed the amount specified in the notice of withholding furnished under subparagraph (e)(1) of this clause;

(4) *Subsequent subcontractor payment*. Pay the subcontractor as soon as practicable after the correction of the identified subcontract performance deficiency, and--

(i) Make such payment within--

(A) Seven days after correction of the identified subcontract performance deficiency (unless the funds therefor must be recovered from the Government because of a reduction under subdivision (e)(5)(i)) of this clause; or

(B) Seven days after the Contractor recovers such funds from the Government; or

(ii) Incur an obligation to pay a late payment interest penalty computed at the rate of interest established by the Secretary of the Treasury, and published in the *Federal Register*, for interest payments under section 12 of the Contracts Disputes Act of 1978 (41 U.S.C. 611) in effect at the time the Contractor accrues the obligation to pay an interest penalty;

(5) *Notice to Contracting Officer*. Notify the Contracting Officer upon--

(i) Reduction of the amount of any subsequent certified application for payment; or

(ii) Payment to the subcontractor of any withheld amounts of a progress payment, specifying--

(A) The amounts withheld under subparagraph (e)(1) of this clause; and

(B) The dates that such withholding began and ended; and

(6) *Interest to Government*. Be obligated to pay to the Government an amount equal to interest on the withheld payments (computed in the manner provided in 31 U.S.C. 3903(c)(1)), from the 8th day after receipt of the withheld amounts from the Government until--

(i) The day the identified subcontractor performance deficiency is corrected; or

(ii) The date that any subsequent payment is reduced under subdivision (e)(5)(i) of this clause.

(f) *Third-party deficiency reports*--(1) *Withholding from subcontractor*. If a Contractor, after making payment to a first-tier subcontractor, receives from a supplier or subcontractor of the first-tier subcontractor (hereafter referred to as a "second-tier subcontractor") a written notice in accordance with section 2 of the Act of August 24, 1935 (40 U.S.C. 270b, Miller Act), asserting a deficiency in such first-tier subcontractor's performance under the contract for which the Contractor may be ultimately liable, and the Contractor determines that all or a portion of future payments otherwise due such first-tier subcontractor is subject to withholding in accordance with the subcontract agreement, the Contractor may, without incurring an obligation to pay an interest penalty under subparagraph (e)(6) of this clause--

(i) Furnish to the first-tier subcontractor a notice conforming to the standards of paragraph (g) of this clause as soon as practicable upon making such determination; and

(ii) Withhold from the first-tier subcontractor's next available progress payment or payments an amount not to exceed the amount specified in the notice of withholding furnished under subdivision (f)(1)(i) of this clause.

(2) *Subsequent payment or interest charge*. As soon as practicable, but not later than 7 days after receipt of satisfactory written notification that the identified subcontract performance deficiency has been corrected, the Contractor shall--

(i) Pay the amount withheld under subdivision (f)(1)(ii) of this clause to such first-tier subcontractor; or

(ii) Incur an obligation to pay a late payment interest penalty to such first-tier subcontractor computed at the rate of interest established by the Secretary of the Treasury, and published in the *Federal Register*, for interest payments under section 12 of the Contracts Disputes Act of 1978 (41 U.S.C. 611) in effect at the time the Contractor accrues the obligation to pay an interest penalty.

(g) *Written notice of subcontractor withholding*. A written notice of any withholding shall be issued to a subcontractor (with a copy to the Contracting Officer of any such notice issued by the Contractor), specifying--

(1) The amount to be withheld;

(2) The specific causes for the withholding under the terms of the subcontract; and

(3) The remedial actions to be taken by the subcontractor in order to receive payment of the amounts withheld.

(h) *Subcontractor payment entitlement*. The Contractor may not request payment from the Government of any amount withheld or retained in accordance with paragraph (d) of this clause until such time as the Contractor has determined and certified to the Contracting Officer that the subcontractor is entitled to the payment of such amount.

(i) *Prime-subcontractor disputes*. A dispute between the Contractor and subcontractor relating to the amount or entitlement of a subcontractor to a payment or a late payment interest penalty under a clause included in the subcontract pursuant to paragraph (c) of this clause does not constitute a dispute to which the United States is a party. The United States may not be interpleaded in any judicial or administrative proceeding involving such a dispute.

(j) *Preservation of prime-subcontractor rights*. Except as provided in paragraph (i) of this clause, this clause shall not limit or impair any contractual, administrative, or judicial remedies otherwise available to the Contractor or a subcontractor in the event of a dispute involving late payment or nonpayment by the Contractor or deficient subcontract performance or nonperformance by a subcontractor.

(k) *Non-recourse for prime contractor interest penalty*. The Contractor's obligation to pay an interest penalty to a subcontractor pursuant to the clauses included in a subcontract under paragraph (c) of this clause shall not be construed to be an obligation of the United States for such interest penalty. A cost-reimbursement claim may not include any amount for reimbursement of such interest penalty.

25. SAACONS 52.0232-4501 INVOICES (AUG 1991)

The Government shall pay the Contractor upon submission of proper invoices for supplies delivered and accepted or services rendered and accepted for the portion of work actually performed under this contract. Invoices will be submitted in quadruplicate to the address in Block 26, SF1442, which will be completed at time of award. Invoices shall be submitted on ENG Form 93 which will be provided to the Contractor by the Government

26. FAR 52.236-4 PHYSICAL DATA (APR 1984)

Data and information furnished or referred to below is for the Contractor's information. The Government shall not be responsible for any interpretation of or conclusion drawn from the data or information by the Contractor.

(a) The indications of physical conditions on the drawings and in the specifications are the result of site investigations by the Government.

(b) Weather conditions: The Contractor shall satisfy himself/herself as to the hazards likely to arise from weather conditions. Complete weather records and reports may be obtained from any U.S. Weather Bureau Office.

(c) Transportation Facilities: The Contractor shall make his/her own investigation of the conditions of existing public and private roads and of clearances, restrictions, bridge load limits and other limitations affecting transportation and ingress and egress at the job site. The unavailability of transportation facilities or limitations thereon shall not become a basis for claims against the Government or extension of time for completion of the work.

27. DFARS 252.236-7001 CONTRACT DRAWINGS, MAPS, AND SPECIFICATIONS (DEC 1991)

(a) The Government--

(1) Will provide the Contractor, without charge, one set of large-scale contract drawings and specifications except publications incorporated into the technical provisions by reference;

(2) Will furnish additional sets on request, for the cost of reproduction; and

(3) May, at its option, furnish the Contractor one set of reproducibles, or half-size drawings, in lieu of the drawings in paragraph (a)(1) of this clause.

(b) The Contractor shall--

(1) Check all drawings furnished immediately upon receipt;

(2) Compare all drawings and verify the figures before laying out the work;

(3) Promptly notify the Contracting Officer of any discrepancies; and

(4) Be responsible for any errors which might have been avoided by complying with this paragraph (b).

(c) Large scale drawings shall, in general, govern small scale drawings. Figures marked on drawings shall, in general, be followed in preference to scale measurements.

(d) Omissions from the drawings or specifications or the misdescription of details of work which are manifestly necessary to carry out the intent of the drawings and specifications, or which are customarily performed, shall not relieve the Contractor from performing such omitted or misdescribed details of the work, but shall be performed as if fully and correctly set forth and described in the drawings and specifications.

(e) The work shall conform to the specifications and the contract drawings identified on the following index of drawings:

Drawing File No.

201-25-187

Sheet No.	Description	Rev. No.
G1.0	TITLE SHEET	
G1.1	SCHEDULE OF DRAWINGS	
G1.2	PROJECT LOCATION MAPS	
C1.1	SHEET INDEX	

C1.2	TOPOGRAPHY
C1.3	TOPOGRAPHY
C1.4	TOPOGRAPHY
C1.5	TOPOGRAPHY
C1.6	TOPOGRAPHY
C1.7	TOPOGRAPHY
C1.8	TOPOGRAPHY
C1.9	TOPOGRAPHY
C1.10	TOPOGRAPHY
C1.11	TOPOGRAPHY
C1.12	TOPOGRAPHY
C1.13	TOPOGRAPHY
C1.14	TOPOGRAPHY
C1.15	TOPOGRAPHY
C1.16	TOPOGRAPHY
C1.17	TOPOGRAPHY
C2.0	LOCATION OF EXPLORATIONS
C2.2	LOG OF EXPLORATIONS
C2.3	LOG OF EXPLORATIONS
C3	INSPECTION AND REPAIR FACILITY DEMOLITION PLAN, AND LEGEND AND ABBREVIATIONS
C4.0	ACCESS ROAD SITE PLAN AND PROFILE
C4.1	INSPECTION AND REPAIR FACILITY SITE AND UTILITY PLAN
C4.2	K-LINE DEMOLITION AND SITE PLAN
C4.3	G-LINE GRADING AND PAVING PLAN
C4.4	DUNNAGE BUILDING SITE, GRADING AND PAVING PLAN
C5.1	INSPECTION AND REPAIR FACILITY GRADING AND PAVING PLAN
C5.2	K-LINE GRADING AND PAVING PLAN
C5.3	G-LINE GRADING AND PAVING PLAN
C7.1	INSPECTION AND REPAIR FACILITY SECTIONS
C7.2	K-LINE SECTIONS
C7.3	G-LINE SECTIONS
C8.1	SITE DETAILS
C8.2	SITE DETAILS
C8.3	UTILITY DETAILS
C8.4	CHAIN LINK FENCE AND DETAILS
A1.0	EXTERIOR COLOR SCHEDULE AND ABBREVIATIONS
A1.1	FINISH SCHEDULE
A2.0	FLOOR PLAN AND DIMENSION PLAN
A2.1	DUNNAGE BUILDING FLOOR PLANS
A3.0	REPAIR BUILDING ELEVATIONS
A3.1	DUNNAGE BUILDING ELEVATIONS
A3.2	DUNNAGE BUILDING #1 ELEVATIONS
A4.0	BUILDING SECTIONS
A4.1	WALL SECTIONS
A5.0	ROOF PLAN
A6.0	REFLECTED CEILING PLAN AND DETAILS
A7.0	ENLARGED PLAN INTERIOR ELEVATIONS AND DETAILS
A8.0	DOOR, WINDOW AND LOUVER SCHEDULE
A8.1	DOOR AND WINDOW DETAILS
A8.2	LOUVER TYPES
A9.0	MISCELLANEOUS DETAILS

S1.0	TYPICAL NOTES AND DETAILS
S2.0	REPAIR BUILDING/DUNNAGE BUILDING FOUNDATION PLAN
M1.0	MECHANICAL FLOOR PLAN, SCHEDULES AND CONTROLS
M1.1	MECHANICAL FLOOR PLAN, SCHEDULES & CONTROLS
M2.0	REPAIR BUILDING MECHANICAL DETAILS
P1.0	PLUMBING PLAN
E0.0	ELECTRICAL LEGEND
E1.0	DUNNAGE NO. 1 AND REPAIR BUILDING SITE PLAN
E1.1	K-LINE SITE PLAN
E1.2	G-LINE SITE PLAN
E1.3	K-LINE AND G-LINE ONE LINE DIAGRAM
E1.4	DUNNAGE BUILDING NO. 2 SITE PLAN
E2.0	ELECTRICAL DETAILS
E2.1	ELECTRICAL DETAILS
E2.2	ELECTRICAL DETAILS
E2.3	ELECTRICAL DETAILS
E2.4	ELECTRICAL DETAILS
E3.0	DUNNAGE BUILDING NO.1 POWER PLAN
E3.1	DUNNAGE BUILDING NO. 2 POWER PLAN
E3.2	REPAIR BUILING POWER PLAN
E3.3	REPAIR BUILDING MECHANICAL EQUIPMENT PLAN
E3.4	DUNNAGE BUILDING NO. 1 ELECTRICAL ONE-LINE AND SCHEDULES
E3.5	DUNNAGE BUILDING NO. 2 ELECTRICAL ONE-LINE AND SCHEDULES
E3.6	REPAIR BUILDING ELECTRICAL ONE-LINE AND SCHEUDLES
E3.7	K-LINE AND G-LINE ELECTRICAL ONE LINE AND SCHED.
E4.0	DUNNAGE BUILDING NO. 1 LIGHTING PLAN
E4.1	DUNNAGE BUILDING NO. 2 LIGHTING PLAN
E4.2	REPAIR BUILDING LIGHTING PLAN
E4.3	LIGHTING SCHEDULE AND DETAILS
E4.4	K AND G LINE STUFFING AND TRANSFER FACILITY LIGHTING CONTROL DIAGRAM
E5.0	REPAIR BUILDING SIGNAL PLAN
E5.1	DUNNAGE AND REPAIR BUILDING SIGNAL DIAGRAMS AND DETAILS

STANDARD DRAWINGS

(Attached to SPECIFICATION SECTION: TEMPORARY CONSTRUCTION FACILITIES)

Project Sign	150-25-1186
Sign Details	150-25-1232
Safety Sign	80-25-707
Hard Hat Sign	80-25-774

28. SAACONS 52.0236-4581 AVAILABILITY OF UTILITIES SERVICES (APR 1992)

All reasonably required amounts of water, electricity, and other utilities essential to contract performance will be made available to the contractor at no cost to the contractor from existing systems, outlets and supplies. All temporary connections, outlets and distribution lines, as may be required, shall be installed, maintained and removed by the Contractor at Contractor's expense; removal shall be before final acceptance of the work by the Government. The Contractor shall carefully conserve any utilities furnished without charge.

29. SAACONS 52.0236-4801 SALVAGE AND SCRAP GOVERNMENT PROPERTY (OCT 1993)

(a) "Government property" means all property owned by or leased to the Government or acquired by the Government under the terms of the contract. It includes both Government-furnished property and contractor-acquired property.

(b) "Salvage" means Government property in possession of a contractor, including subcontractors, that, because of its worn, damaged, deteriorated, or incomplete condition or specialized nature, has no reasonable prospect of sale or use as serviceable property without major repairs, but has some value in excess of its scrap value.

(c) "Scrap" means Government personal property that has no value except for its basic material content.

(d) In accordance with FAR 45.505-8 the Contractor shall maintain records of all scrap and salvage generated from this contract. The Contractor's records shall contain the following information:

(1) Contract Number

(2) Description of salvageable items or classification (material content) of scrap

(3) Quantity on hand

(e) The Contractor shall provide final accounting and disposition recommendations of all Government property not consumed in performing this contract or delivered to the Government including salvage and scrap. The Government will review the Contractor's records and shall cause correction if the Government disagrees with the classification of items as salvage or scrap. The Contractor shall dispose of the items as directed by the Contracting Officer. Items designated as scrap (agreed to by the Contracting Officer) shall be retained by the Contractor; its disposition shall be the responsibility of the Contractor. See Specification Section 01505, paragraph entitled "Scrap Material". Items designated as salvageable items (agreed to by the Contracting Officer) shall be turned over to the Government.

30. SAACONS 52.0239-4001 YEAR 2000 COMPLIANCE (Y2K) - CONSTRUCTION CONTRACTS (JUL 1998)

(a) In accordance with FAR 39.106, the Contractor shall ensure that with respect to any design, construction, goods, or services under this contract as well as any subsequent task/delivery orders issued under this contract (if applicable), all information technology contained therein shall be Year 2000 compliant. Specifically the Contractor shall:

(1) Perform, maintain, and provide an inventory of all major components to include structures, equipment, items, parts, and furnishings under this contract and each task/delivery order which may be affected by the Year 2000 compliance requirement.

(2) Indicate whether each component is currently Year 2000 compliant or requires an upgrade for compliance prior to Government acceptance.

(3) For any architect-engineering or design work included in this contract, the contractor shall insure that the hardware, firmware, software, and information technology systems separately or in combination with each other or other elements specified in the documents developed under this contract shall be year 2000 compliant in accordance with FAR 39.106.

31. FAR 52.243-7 NOTIFICATION OF CHANGES (APR 1984)

(a) Definitions. "Contracting Officer," as used in this clause, does not include any representative of the Contracting Officer. "Specifically authorized representative (SAR)," as used in this clause, means any person the Contracting Officer has so designated by written notice (a copy of which shall be provided to the Contractor) which shall refer to this subparagraph and

shall be issued to the designated representative before the SAR exercises such authority.

(b) Notice. The primary purpose of this clause is to obtain prompt reporting of Government conduct that the Contractor considers to constitute a change to this contract. Except for changes identified as such in writing and signed by the Contracting Officer, the Contractor shall notify the Administrative Contracting Officer in writing promptly, within 14 calendar days from the date that the Contractor identifies any Government conduct (including actions, inactions, and written or oral communications) that the Contractor regards as a change to the contract terms and conditions. On the basis of the most accurate information available to the Contractor, the notice shall state--

(1) The date, nature, and circumstances of the conduct regarded as a change;

(2) The name, function, and activity of each Government individual and Contractor official or employee involved in or knowledgeable about such conduct;

(3) The identification of any documents and the substance of any oral communication involved in such conduct;

(4) In the instance of alleged acceleration of scheduled performance or delivery, the basis upon which it arose;

(5) The particular elements of contract performance for which the Contractor may seek an equitable adjustment under this clause, including--

(i) What contract line items have been or may be affected by the alleged change;

(ii) What labor or materials or both have been or may be added, deleted, or wasted by the alleged change;

(iii) To the extent practicable, what delay and disruption in the manner and sequence of performance and effect on continued performance have been or may be caused by the alleged change;

(iv) What adjustments to contract price, delivery schedule, and other provisions affected by the alleged change are estimated; and

(6) The Contractor's estimate of the time by which the Government must respond to the Contractor's notice to minimize cost, delay or disruption of performance.

(c) Continued performance. Following submission of the notice required by (b) above, the Contractor shall diligently continue performance of this contract to the maximum extent possible in accordance with its terms and conditions as construed by the Contractor, unless the notice reports a direction of the Contracting Officer or a communication from a SAR of the Contracting Officer, in either of which events the Contractor shall continue performance; provided, however, that if the Contractor regards the direction or communication as a change as described in (b) above, notice shall be given in the manner provided. All directions, communications, interpretations, orders and similar actions of the SAR shall be reduced to writing promptly and copies furnished to the Contractor and to the Contracting Officer. The Contracting Officer shall promptly countermand any action which exceeds the authority of the SAR.

(d) Government response. The Contracting Officer shall promptly, within 14 calendar days after receipt of notice, respond to the notice in writing. In responding, the Contracting Officer shall either--

(1) Confirm that the conduct of which the Contractor gave notice constitutes a change and when necessary direct the mode of further performance;

(2) Countermand any communication regarded as a change;

(3) Deny that the conduct of which the Contractor gave notice constitutes a change and when necessary direct the mode of further performance; or

(4) In the event the Contractor's notice information is inadequate to make a decision under (1), (2), or (3) above, advise the Contractor what additional information is required, and establish the date by which it should be furnished and the date thereafter by which the Government will respond.

(e) Equitable adjustments.

(1) If the Contracting Officer confirms that Government conduct effected a change as alleged by the Contractor, and the conduct causes an increase or decrease in the Contractor's cost of, or the time required for, performance of any part of the work under this contract, whether changed or not changed by such conduct, an equitable adjustment shall be made--

(i) In the contract price or delivery schedule or both; and

(ii) In such other provisions of the contract as may be affected.

(2) The contract shall be modified in writing accordingly. In the case of drawings, designs or specifications which are defective and for which the Government is responsible, the equitable adjustment shall include the cost and time extension for delay reasonably incurred by the Contractor in attempting to comply with the defective drawings, designs or specifications before the Contractor identified, or reasonably should have identified, such defect. When the cost of property made obsolete or excess as a result of a change confirmed by the Contracting Officer under this clause is included in the equitable adjustment, the Contracting Officer shall have the right to prescribe the manner of disposition of the property. The equitable adjustment shall not include increased costs or time extensions for delay resulting from the Contractor's failure to provide notice or to continue performance as provided, respectively, in (b) and (c) above.

32. FAR 52.244-2 SUBCONTRACTS (AUG 1998)

(a) Definitions. As used in this clause--

"Approved purchasing system" means a Contractor's purchasing system that has been reviewed and approved in accordance with Part 44 of the Federal Acquisition Regulation (FAR).

"Consent to subcontract" means the Contracting Officer's written consent for the Contractor to enter into a particular subcontract.

"Subcontract" means any contract, as defined in FAR Subpart 2.1, entered into by a subcontractor to furnish supplies or services for performance of the prime contract or a subcontract. It includes, but is not limited to, purchase orders, and changes and modifications to purchase orders.

(b) This clause does not apply to subcontracts for special test equipment when the contract contains the clause at FAR 52.245-18, Special Test Equipment.

(c) When this clause is included in a fixed-price type contract, consent to subcontract is required only on unpriced contract actions (including unpriced modifications or unpriced delivery orders), and only if required in accordance with paragraph (d) or (e) of this clause.

(d) If the Contractor does not have an approved purchasing system, consent to subcontract is required for any subcontract that--

(1) Is of the cost-reimbursement, time-and-materials, or labor-hour type; or

(2) Is fixed-price and exceeds--

(i) For a contract awarded by the Department of Defense, the Coast Guard, or the National Aeronautics and Space Administration, the greater of the simplified acquisition threshold or 5 percent of the total estimated cost of the contract; or

(ii) For a contract awarded by a civilian agency other than the Coast Guard and the National Aeronautics and Space Administration, either the simplified acquisition threshold or 5 percent of the total estimated cost of the contract.

(e) If the Contractor has an approved purchasing system, the Contractor nevertheless shall obtain the Contracting Officer's written consent before placing the following subcontracts: None.

(f)(1) The Contractor shall notify the Contracting Officer reasonably in advance of placing any subcontract or modification thereof for which consent is required under paragraph (c), (d), or (e) of this clause, including the following information:

(i) A description of the supplies or services to be subcontracted.

(ii) Identification of the type of subcontract to be used.

(iii) Identification of the proposed subcontractor.

(iv) The proposed subcontract price.

(v) The subcontractor's current, complete, and accurate cost or pricing data and Certificate of Current Cost or Pricing Data, if required by other contract provisions.

(vi) The subcontractor's Disclosure Statement or Certificate relating to Cost Accounting Standards when such data are required by other provisions of this contract.

(vii) A negotiation memorandum reflecting--

(A) The principal elements of the subcontract price negotiations;

(B) The most significant considerations controlling establishment of initial or revised prices;

(C) The reason cost or pricing data were or were not required;

(D) The extent, if any, to which the Contractor did not rely on the subcontractor's cost or pricing data in determining the price objective and in negotiating the final price;

(E) The extent to which it was recognized in the negotiation that the subcontractor's cost or pricing data were not accurate, complete, or current; the action taken by the Contractor and the subcontractor; and the effect of any such defective data on the total price negotiated;

(F) The reasons for any significant difference between the Contractor's price objective and the price negotiated; and

(G) A complete explanation of the incentive fee or profit plan when incentives are used. The explanation shall identify each critical performance element, management decisions used to quantify each incentive element, reasons for the incentives, and a summary of all trade-off possibilities considered.

(2) The Contractor is not required to notify the Contracting Officer in advance of entering into any subcontract for which consent is not required under paragraph (c),(d), or (e) of this clause.

(g) Unless the consent or approval specifically provides otherwise, neither consent by the Contracting Officer to any subcontract nor approval of the Contractor's purchasing system shall constitute a determination--

(1) Of the acceptability of any subcontract terms or conditions;

(2) Of the allowability of any cost under this contract; or

(3) To relieve the Contractor of any responsibility for performing this contract.

(h) No subcontract or modification thereof placed under this contract shall provide for payment on a cost-plus-a-percentage-of-cost basis, and any fee payable under cost-reimbursement type subcontracts shall not exceed the fee limitations in FAR 15.404-4(c)(4)(i).

(i) The Contractor shall give the Contracting Officer immediate written notice of any action or suit filed and prompt notice of any claim made against the Contractor by any subcontractor or vendor that, in the opinion of the Contractor, may result in litigation related in any way to this contract, with respect to which the Contractor may be entitled to reimbursement from the Government.

(j) The Government reserves the right to review the Contractor's purchasing system as set forth in FAR Subpart 44.3.

(k) Paragraphs (d) and (f) of this clause do not apply to the following subcontracts, which were evaluated during negotiations: None.

33. FAR 52.246-12 INSPECTION OF CONSTRUCTION (AUG 1996)

(a) Definition. "Work" includes, but is not limited to, materials, workmanship, and manufacture and fabrication of components.

(b) The Contractor shall maintain an adequate inspection system and perform such inspections as will ensure that the work performed under the contract conforms to contract requirements. The Contractor shall maintain complete inspection records and make them available to the Government. All work shall be conducted under the general direction of the Contracting Officer and is subject to Government inspection and test at all places and at all reasonable times before acceptance to ensure strict compliance with the terms of the contract.

(c) Government inspections and tests are for the sole benefit of the Government and do not--

(1) Relieve the Contractor of responsibility for providing adequate quality control measures;

(2) Relieve the Contractor of responsibility for damage to or loss of the material before acceptance;

(3) Constitute or imply acceptance; or

(4) Affect the continuing rights of the Government after acceptance of the completed work under paragraph (i) below.

(d) The presence or absence of a Government inspector does not relieve the Contractor from any contract requirement, nor is the inspector authorized to change any term or condition of the specification without the Contracting Officer's written authorization.

(e) The Contractor shall promptly furnish, at no increase in contract price, all facilities, labor, and material reasonably needed for performing such safe and convenient inspections and tests as may be required by the Contracting Officer. The Government may charge to the Contractor any additional cost of inspection or test when work is not ready at the time specified by the Contractor for inspection or test, or when prior rejection makes reinspection or retest necessary. The Government shall perform all inspections and tests in a manner that will not unnecessarily delay the work. Special, full size, and performance tests shall be performed as described in the contract.

(f) The Contractor shall, without charge, replace or correct work found by the Government not to conform to contract requirements, unless in the public interest the Government consents to accept the work with an appropriate adjustment in contract price. The Contractor shall promptly segregate and remove rejected material from the premises.

(g) If the Contractor does not promptly replace or correct rejected work, the Government may (1) by contract or otherwise, replace or correct the work and charge the cost to the Contractor or (2) terminate for default the Contractor's right to proceed.

(h) If, before acceptance of the entire work, the Government decides to examine already completed work by removing it or tearing it out, the Contractor, on request, shall promptly furnish all necessary facilities, labor, and material. If the work is found to be defective or nonconforming in any material respect due to the fault of the Contractor or its subcontractors, the Contractor shall defray the expenses of the examination and of satisfactory reconstruction. However, if the work is found to meet contract requirements, the Contracting Officer shall make an equitable adjustment for the additional services involved in the examination and reconstruction, including, if completion of the work was thereby delayed, an extension of time.

(i) Unless otherwise specified in the contract, the Government shall accept, as promptly as practicable after completion and inspection, all work required by the contract or that portion of the work the Contracting Officer determines can be accepted separately. Acceptance shall be final and conclusive except for latent defects, fraud, gross mistakes amounting to fraud, or the Government's rights under any warranty or guarantee.

34. DFARS 252.247-7023 TRANSPORTATION OF SUPPLIES BY SEA (NOV 1995)

(a) Definitions. As used in this clause--

(1) "Components" means articles, materials, and supplies incorporated directly into end products at any level of manufacture, fabrication, or assembly by the Contractor or any subcontractor.

(2) "Department of Defense (DoD)" means the Army, Navy, Air Force, Marine Corps, and defense agencies.

(3) "Foreign flag vessel" means any vessel that is not a U.S.-flag vessel.

(4) "Ocean transportation" means any transportation aboard a ship, vessel, boat, barge, or ferry through international waters.

(5) "Subcontractor" means a supplier, materialman, distributor, or vendor at any level below the prime Contractor whose contractual obligation to perform results from, or is conditioned upon, award of the prime contract and who is performing any part of the work or other requirement of the prime contract. However, effective May 1, 1996, the term does not include a supplier, materialman, distributor, or vendor of commercial items or commercial components.

(6) "Supplies" means all property, except land and interests in land, that is clearly identifiable for eventual use by or owned by the DoD at the time of transportation by sea.

(i) An item is clearly identifiable for eventual use by the DoD if, for example, the contract documentation contains a reference to a DoD contract number or a military destination.

(ii) Supplies includes (but is not limited to) public works; buildings and facilities; ships; floating equipment and vessels of every character, type, and description, with parts, subassemblies, accessories, and equipment; machine tools; material; equipment; stores of all kinds; end items; construction materials; and components of the foregoing.

(7) "U.S.-flag vessel" means a vessel of the United States or belonging to the United States, including any vessel registered or having national status under the laws of the United States.

(b) The Contractor shall employ U.S.-flag vessels in the transportation by sea of any supplies to be furnished in the performance of this contract. The Contractor and its subcontractors may request that the Contracting Officer authorize shipment in foreign-flag vessels, or designate available U.S.-flag vessels, if the Contractor or a subcontractor believes that--

(1) U.S.-flag vessels are not available for timely shipment;

(2) The freight charges are inordinately excessive or unreasonable; or

(3) Freight charges are higher than charges to private persons for transportation of like goods.

(c) The Contractor must submit any request for use of other than U.S.-flag vessels in writing to the Contracting Officer at least 45 days prior to the sailing date necessary to meet its delivery schedules. The Contracting Officer will process requests submitted after such date(s) as expeditiously as possible, but the Contracting Officer's failure to grant approvals to meet the shipper's sailing date will not of itself constitute a compensable delay under this or any other clause of this contract. Requests shall contain at a minimum--

(1) Type, weight, and cube of cargo;

(2) Required shipping date;
(3) Special handling and discharge requirements;
(4) Loading and discharge points;
(5) Name of shipper and consignee;
(6) Prime contract number; and
(7) A documented description of efforts made to secure U.S.-flag vessels, including points of contact (with names and telephone numbers) with at least two U.S.-flag carriers contacted. Copies of telephone notes, telegraphic and facsimile message or letters will be sufficient for this purpose.

(d) The Contractor shall, within 30 days after each shipment covered by this clause, provide the Contracting Officer and the Division of National Cargo, Office of Market Development, Maritime Administration, U.S. Department of Transportation, Washington, DC 20590, one copy of the rated on board vessel operating carrier's ocean bill of lading, which shall contain the following information--

(1) Prime contract number;
(2) Name of vessel;
(3) Vessel flag of registry;
(4) Date of loading;
(5) Port of loading;
(6) Port of final discharge;
(7) Description of commodity;
(8) Gross weight in pounds and cubic feet if available;
(9) Total ocean freight in U.S. dollars; and
(10) Name of the steamship company.

(e) The Contractor agrees to provide with its final invoice under this contract a representation that to the best of its knowledge and belief--

(1) No ocean transportation was used in the performance of this contract;
(2) Ocean transportation was used and only U.S.-flag vessels were used for all ocean shipments under the contract;
(3) Ocean transportation was used, and the Contractor had the written consent of the Contracting Officer for all non-U.S.-flag ocean transportation; or
(4) Ocean transportation was used and some or all of the shipments were made on non-U.S.-flag vessels without the written consent of the Contracting Officer. The Contractor shall describe these shipments in the following format:

	Item Description	Contract Line Items	Quantity
Total....			

(f) If the final invoice does not include the required representation, the Government will reject and return it to the Contractor as an improper invoice for the purposes of the Prompt Payment clause of this contract. In the event there has been unauthorized use of non-U.S.-flag vessels in the performance of this contract, the Contracting Officer is entitled to equitably adjust the contract, based on the unauthorized use.

(g) The Contractor shall include this clause, including this paragraph (g) in all subcontracts under this contract, which exceed the simplified acquisition threshold in Part 13 of the Federal Acquisition Regulation.

35. EFARS 52.249-5000 BASIS FOR SETTLEMENT OF PROPOSALS (DEC 1995)

Actual costs will be used to determine equipment costs for a settlement proposal submitted on the total cost basis under FAR 49.206-2(b). In evaluating a termination settlement proposal using the total cost basis, the following principles will be applied to determine allowable equipment costs:

(1) Actual costs for each piece of equipment or groups of similar serial or series equipment need not be available in the Contractor's accounting records to determine total actual equipment costs.

(2) If equipment costs have been allocated to a contract using predetermined rates, those charges will be adjusted to actual costs.

(3) Recorded job costs adjusted for unallowable expenses will be used to determine equipment operating expenses.

(4) Ownership costs (depreciation) will be determined using the Contractor's depreciation schedule (subject to the provisions of FAR 31.205-11).

(5) License, taxes, storage and insurance costs are normally recovered as an indirect expense and unless the Contractor charges these costs directly to contracts, they will be recovered through the indirect expense rate.

36. FAR 52.252-4 ALTERATIONS IN CONTRACT (APR 1984)

Portions of this contract are altered as follows: None

37. FAR 52.252-6 AUTHORIZED DEVIATIONS IN CLAUSES (APR 1984)

(a) The use in this solicitation or contract of any Federal Acquisition Regulation (48 CFR Chapter 1) clause with an authorized deviation is indicated by the addition of "(DEVIATION)" after the date of the clause.

(b) The use in this solicitation or contract of any Department of Defense FAR Supplement (48 CFR Chapter 2) clause with an authorized deviation is indicated by the addition of "(DEVIATION)" after the name of the regulation.

END OF SECTION

ATTACHMENTS

ATTACHMENTS

1. GENERAL WAGE DECISION

2. DD FORM 2051, APPLICATION FOR COMMERCIAL AND GOVERNMENT ENTITY (CAGE) CODE - SEE SECTION 00100, DFARS 252.204-7001. COMPLETE SECTION B, BLOCKS 1 THROUGH 10, OF THE DD FORM 2051 AND RETURN WITH BID/COST PROPOSAL IF YOU DO NOT ALREADY HAVE A CAGE CODE.

   IF YOU HAVE BEEN AWARDED A DOD CONTRACT WITHIN THE PAST SEVERAL YEARS, THE OFFICE THAT MADE THE AWARD WILL PROBABLY HAVE YOUR CAGE CODE NUMBER IN THEIR DATA BASE. (SACRAMENTO DISTRICT WILL NOT HAVE INFORMATION ON LOS ANGELES DISTRICT AWARDS AND VICE VERSA.) IF YOU DO NOT KNOW YOUR CAGE CODE NUMBER, SUBMIT THE DD FORM 2051 WITH YOUR BID/PROPOSAL. PLEASE DO NOT SEND THE DD FORM 2051 AHEAD OF TIME. BE SURE THAT YOU USE A STREET ADDRESS FOR YOUR FIRM, NOT A POST OFFICE BOX.

   DO NOT UNDER ANY CIRCUMSTANCES DELAY SUBMITTING YOUR BID OR PROPOSAL WHILE ATTEMPTING TO OBTAIN A CAGE CODE NUMBER OR INFORMATION ON HOW TO COMPLETE THE DD FORM 2051. FAILURE TO FURNISH A CAGE CODE NUMBER OR THE FORM WILL NOT RENDER YOUR BID/PROPOSAL NONRESPONSIVE.

   IN ORDER TO FILL IN THE STANDARD INDUSTRIAL CLASSIFICATION (SIC) NUMBER AS REQUIRED BY THE DD FORM 2051, YOU WILL FIND THE SIC CODE FOR THIS SOLICITATION IN SECTION 00600, FAR 52.219-1. TO LIST OTHER SIC CODES YOUR FIRM IS ALSO IN THE BUSINESS TO PROVIDE, THE STANDARD INDUSTRIAL CLASSIFICATION MANUAL IS SOLD BY THE NATIONAL TECHNICAL INFORMATION SERVICE, 5285 PORT ROYAL ROAD, SPRINGFIELD, VIRGINIA 22161. THE ORDER NUMBER IS PB 87-100012.

3. PREAWARD SURVEY - SEE SECTION 00100, SAACONS 52.0209-4501. THE PREAWARD SURVEY IS ATTACHED FOR INFORMATION PURPOSES ONLY; IT WILL BE REQUIRED ONLY FROM THE LOW BIDDER AFTER BID OPENING IF THE LOW BIDDER HAS NOT HAD A CONTRACT WITH THE SACRAMENTO DISTRICT, CORPS OF ENGINEERS, IN THE LAST TWELVE-MONTH PERIOD. IT IS NOT REQUIRED AS PART OF THE BID PACKAGE.

General Decision Number UT980005

Superseded General Decision No. UT970005

State: **Utah**
Construction Type:
BUILDING

County(ies):
TOOELE
BUILDING CONSTRUCTION PROJECTS (does not include residential construction consisting of single family homes and apartments up to and including 4 stories)

Modification Number	Publication Date
0	02/13/1998
1	03/13/1998
2	09/18/1998

COUNTY(ies):
TOOELE

ELEC0354E 04/01/1997

	Rates	Fringes
Electricians	19.00	4.87+4.2%

---

* ROOF0091A 10/01/1996

	Rates	Fringes
ROOFERS	15.20	3.45

SHEE0312C 01/01/1997

	Rates	Fringes
SHEET METAL WORKERS (Includes HVAC and Architect/ Roofing)	19.61	5.11

SUUT1002A
CONSTRUCTION DESCRIPTION:

BUILDING CONSTRUCTION (Does not include single family homes and and apartments up to and including 4 stories

SUUT1002A 10/03/1990

	Rates	Fringes
ASBESTOS WORKERS (pipe insulation and removal of insulation from pipe	17.42	4.10
BRICKLAYERS	11.75	1.57
CARPENTER (excluding drywall hangers and batt insulators)	13.75	2.35
CEMENT MASONS	13.40	2.35
DRYWALL HANGERS	13.75	2.35
GLAZIERS	15.00	.83
INSULATORS, (batt & blown)	13.75	2.35
IRONWORKERS	16.65	3.35
LABORERS	10.31	2.19
MASON TENDERS	8.10	1.05
PAINTERS, brush and spray (excluding drywall finishing)	13.57	1.62
PLUMBERS	16.33	2.72
SOFT FLOOR LAYERS	13.65	2.35
SPRINKLER FITTERS	16.68	2.86
TILE SETTERS	12.78	1.69
TRUCK DRIVERS	18.04	4.03
WATER TRUCK	15.90	5.13
POWER EQUIPMENT OPERATOR		
Asphalt paver	13.99	4.81
Backhoe	13.08	4.99

Crane	15.53	5.48
Dozer	13.28	5.48
Front-end loader	13.51	5.03
Motor patrol	14.11	4.88
Roller	12.58	5.48
Screed	13.14	4.94

WELDERS: Receive rate prescribed for craft performing operation to which welding is incidental.

Unlisted classifications needed for work not included within the scope of the classifications listed may be added after award only as provided in the labor standards contract clauses (29 CFR 5.5(a)(1)(v)).

In the listing above, the "SU" designation means that rates listed under that identifier do not reflect collectively bargained wage and fringe benefit rates. Other designations indicate unions whose rates have been determined to be prevailing.

WAGE DETERMINATION APPEALS PROCESS

1.) Has there been an initial decision in the matter? This can be:

* an existing published wage determination
* a survey underlying a wage determination
* a Wage and Hour Division letter setting forth a position on a wage determination matter
* a conformance (additional classification and rate) ruling

On survey related matters, initial contact, including requests for summaries of surveys, should be with the Wage and Hour Regional Office for the area in which the survey was conducted because those Regional Offices have responsibility for the Davis-Bacon survey program. If the response from this initial contact is not satisfactory, then the process described in 2.) and 3.) should be followed.

With regard to any other matter not yet ripe for the formal process described here, initial contact should be with the Branch of Construction Wage Determinations. Write to:

Branch of Construction Wage Determinations
Wage and Hour Division
U. S. Department of Labor

200 Constitution Avenue, N. W.
Washington, D. C. 20210

2.) If the answer to the question in 1.) is yes, then an interested party (those affected by the action) can request review and reconsideration from the Wage and Hour Administrator (See 29 CFR Part 1.8 and 29 CFR Part 7). Write to:

Wage and Hour Administrator
U.S. Department of Labor
200 Constitution Avenue, N. W.
Washington, D. C. 20210

The request should be accompanied by a full statement of the interested party's position and by any information (wage payment data, project description, area practice material, etc.) that the requestor considers relevant to the issue.

3.) If the decision of the Administrator is not favorable, an interested party may appeal directly to the Administrative Review Board (formerly the Wage Appeals Board). Write to:

Administrative Review Board
U. S. Department of Labor
200 Constitution Avenue, N. W.
Washington, D. C. 20210

4.) All decisions by the Administrative Review Board are final.

END OF GENERAL DECISION

REQUEST FOR ASSIGNMENT OF A COMMERCIAL AND GOVERNMENT ENTITY (CAGE) CODE

(See Instructions on Reverse)

Form Approved
OMB No. 0704-0225
Expires Oct 31, 1991

Public reporting burden for this collection of information is estimated to average 7 minutes per response, including the time for reviewing instructions, searching existing data sources, gathering and maintaining the data needed, and completing and reviewing the collection of information. Send comments regarding this burden estimate or any other aspect of this collection of information, including suggestions for reducing this burden, to Department of Defense, Washington Headquarters Services, Directorate for Information Operations and Reports, 1215 Jefferson Davis Highway, Suite 1204, Arlington, VA 22202-4302, and to the Office of Management and Budget, Paperwork Reduction Project (0704-0225), Washington, DC 20503. Please DO NOT RETURN your form to either of these addresses. Send completed form to address on reverse.

SECTION A - TO BE COMPLETED BY INITIATOR

1. REQUESTING GOVERNMENT AGENCY/ACTIVITY

a. NAME: Activity Code: 369

b. ADDRESS (Street, City, State and Zip Code):
Corps of Engineers
1325 J Street, Room 878
Sacramento, CA 95814-2922

2. TYPE CODE REQUESTED (X one)	3. EXCEPTION CODES
a. TYPE A	a. CAO
b. TYPE F	b. ADP

4. INITIATOR

a. TYPED NAME (Last, First, Middle Initial)	b. OFFICE SYMBOL	c. SIGNATURE	d. TELEPHONE NO.
MILLER, RONALD J.	CESPK-CT		(916)557-5205

SECTION B - TO BE COMPLETED BY FIRM TO BE CODED

1. FIRM DO NOT USE A P.O. BOX ADDRESS!

a. NAME (Include Branch of, Division of, etc.)

b. ADDRESS (Street, City, State and Zip Code)

c. CAGE CODE (If previously assigned)

2. IF FIRM PREVIOUSLY OPERATED UNDER OTHER NAME(S) OR OTHER ADDRESS(ES) SPECIFY THE PREVIOUS NAME(S) AND/OR ADDRESS(ES) (Use separate sheet of paper, if necessary)

3. PARENT COMPANY AND AFFILIATED FIRMS (X one, and complete as applicable)

- a. NONE
- b. CURRENTLY AFFILIATED WITH OTHER FIRMS (List name(s) and address(es) of such firms on a separate sheet of paper)
- c. PREVIOUSLY AFFILIATED WITH OTHER FIRMS (List name(s) and address(es) of such firms on a separate sheet of paper)

4. PRIMARY BUSINESS CATEGORY (X one)

- a. MANUFACTURER
- b. DEALER/DISTRIBUTOR
- c. CONSTRUCTION FIRM
- d. SERVICE COMPANY
- e. SALES OFFICE
- f. OTHER (Specify)

5. DISADVANTAGED SMALL BUSINESS STATUS (X one)

- a. APPROVED BY SMALL BUSINESS ADMINISTRATION (SBA) FOR SECTION 8(a) PROGRAM
- b. OTHER DISADVANTAGED SMALL BUSINESS FIRM
- c. NOT DISADVANTAGED SMALL BUSINESS FIRM

6. NUMBER OF EMPLOYEES

7. WOMAN OWNED BUSINESS (X one): a. YES b. NO

8. STANDARD INDUSTRIAL CLASSIFICATION (SIC) CODE(S)

- a. PRIMARY
- b. OTHER (Specify)

9. REMARKS

SOLICITATION NUMBER: DACA05-99-B-0010

CONTRACT SPECIALIST: LORETTA RICHMOND

10. FIRM OFFICIAL

a. TYPED NAME (Last, First, Middle Initial)	b. DATE SIGNED (YYMMDD)	c. SIGNATURE	d. TELEPHONE NO.
			/

INSTRUCTIONS FOR COMPLETING DD FORM 2051

GENERAL NOTE FOR PERSONNEL PREPARING OR PROCESSING THIS REPORT

Coding must be as indicated in the instructions. In cases where specific coding instructions are provided, reference must be made to the Department of Defense Manual for Standard Data Elements, DoD 5000.12-M. Noncompliance with either the coding instructions contained herein or those published in referenced manual will make the organization which fails to comply responsible for required concessions in data base communication.

SPECIFIC INSTRUCTIONS

SECTION A - TO BE COMPLETED BY THE INITIATING GOVERNMENT ACTIVITY

Item 1: Self-explanatory.

Item 2: Mark the type of code being requested.

a. Type A - Manufacturers Code which is used in the Federal Catalog System to identify a certain facility at a specific location which is a possible source for the manufacture and/or design control of items cataloged by the Federal Government; or,

b. Type F - Non-manufacturers Code which is required for identifying an organization/function in MILSCAP. These are assigned to contractors which are non-manufacturers or are manufacturers not qualifying for a Type A Code.

Item 3: If applicable, enter the exception DoD Activity Address Code for the Servicing Contract Administration Office (CAO) or ADP point.

Item 4: Self-explanatory.

SECTION B - TO BE COMPLETED BY THE FIRM TO WHICH THE CODE WILL BE ASSIGNED

Items 1a and 1b: Self-explanatory.

Item 1c: If a CAGE Code (Type A or Type F) was previously assigned, enter it in this block.

Item 2: Self-explanatory.

Item 3: If a block other than "None" is marked, identify the Parent company by a (P) beside the firm name.

SECTION B - *(Continued)*

Item 4: Self-explanatory.

Item 5: A disadvantaged business firm is defined as a firm that is 51%, or more, owned, controlled, and operated by a person(s) who is socially and economically disadvantaged. "Controlled" is defined as exercising the power to make policy decisions. "Operated" is defined as actively involved in the day-to-day management of the firm.

Item 6: Enter the number of employees. This number should include the employees of all affiliates.

Item 7: A woman-owned business is defined as a firm that is 51%, or more, owned, controlled, and operated by a woman or women. "Controlled" and "Operated" are as defined in Item 5.

Item 8: The SIC Code is a Government Index used to identify business activity and indicates the function (manufacturer, wholesaler, retailer, or service) and the line of business in which the company is engaged. If multiple SIC Codes, indicate the primary first, next important, etc.

Items 9 and 10: Self-explanatory.

NOTE: When any future changes are made to the coded facility; i.e., name change, location change, business sold or operations discontinued, etc., written notification stating the appropriate change should be sent to:

Commander
Defense Logistics Services Center
ATTN: DLSC-FBA
Federal Center
74 North Washington
Battle Creek, MI 49017-3084

PREAWARD SURVEY OF PROSPECTIVE CONTRACTORS
CONSTRUCTION CONTRACTS

It is the general policy of the Department of Defense that contracts shall be awarded only to contractors determined to be responsible in accordance with Part 9 of the Federal Acquisition Regulation (FAR).

No contract shall be awarded to any person or firm unless the Contracting Officer first makes an affirmative determination that the prospective contractor is responsible within the meaning of the FAR, Part 9.

Before making a determination of responsibility, the Contracting Officer shall have in his/her possession or obtain information sufficient to satisfy himself/herself that a prospective contractor currently meets the minimum FAR Part 9 standards.

In order to make the required determination and also to expedite the contract award, the following information must be submitted by the Contractor as directed (see Section 00100, SAACONS 52.0209-4501):

A. COMPLETED CONTRACTOR EXPERIENCE DATA FORM WITH SUPPLEMENTAL SCHEDULES A-D (ATTACHED).

B. LATEST FINANCIAL STATEMENTS. IF THE FINANCIAL STATEMENT IS MORE THAN 60 DAYS OLD, SUBMIT A CERTIFICATE STATING THAT THE FIRM’S FINANCIAL CONDITION IS SUBSTANTIALLY THE SAME, OR, IF NOT THE SAME, STATE THE CHANGES THAT HAVE TAKEN PLACE.

C. PROVIDE LETTERS FROM BANKS OR OTHER FINANCIAL INSTITUTIONS WITH WHICH THE CONTRACTOR CONDUCTS BUSINESS. THE LETTERS SHOULD CONTAIN INFORMATION ABOUT YOUR FIRM’S ACCOUNTS, LOANS, LINES OF CREDIT, ETC., PROVIDING INFORMATION LEADING TO A DETERMINATION THAT YOUR FIRM IS "RESPONSIBILE" AS DEFINED IN THE FEDERAL ACQUISITION REGULATION, PART 9, "HAS THE FINANCIAL RESOURCES TO PERFORM THE CONTRACT OR THE ABILITY TO OBTAIN THEM". THE GOVT IS INTERESTED IN FINANCIAL STABILITY, TIMELY PAYMENTS, THE LENGTH AND NATURE OF THE RELATIONSHIP BETWEEN THE FIRM AND THE FINANCIAL INSTITUTION, ETC. WHICH REVEALS THE FIRM’S FINANCIAL ABILITY TO PERFORM THE CONTRACT. THE LETTERS SHOULD ALSO PROVIDE THE NAME AND TELEPHONE NUMBER OF THE BANK REPRESENTATIVE THE GOVERNMENT MAY CONTACT.

BE SURE TO INCLUDE IN YOUR PREAWARD SURVEY, INFORMATION ON ANY CONTRACTS YOU HAVE HAD WITH THE SACRAMENTO DISTRICT OR LOS ANGELES DISTRICT, CORPS OF ENGINEERS, WITHIN THE LAST 12 MONTHS.

THESE DOCUMENTS SHALL BE TREATED BY THE GOVERNMENT AS CONFIDENTIAL.

CONSTRUCTION CONTRACTOR EXPERIENCE DATA

DATE (Day, Month, Year)

1. FIRM NAME

2. MAIN OFFICE ADDRESS (Street, City, State and Telephone)

3. BRANCH OFFICES

4. SERVICES RENDERED
☐ CONSTRUCTION
☐ DESIGN ☐ CONSULTANT

5. ORGANIZATION
☐ INDIVIDUAL ☐ JOINT VENTURE
☐ PARTNERSHIP ☐ CORPORATION

6. DATE ORGANIZED

7. DATE INCORPORATED AND STATE

8. NAMES OF OFFICERS AND OTHER KEY PERSONNEL

I – PRESENT PAYROLL PERSONNEL (List Number of Each Category Below)

PARTNERS	OFFICERS	OTHER KEY	REMAINDER	TOTAL	SUBTOTAL PERMANENT	MAXIMUM PERSONNEL AT ANY TIME
						DATE _____

II – EQUIPMENT OWNED

PRESENT VALUE ($)	ACQUISITION COST ($)

III – FINANCIAL DATA AS OF (Date) _____

CURRENT ASSETS	CURRENT LIABILITIES	NET WORTH

IV – TOTAL CONTRACT VALUE OF CONSTRUCTION AND DEMOLITION IN PAST SIX YEARS EXCLUSIVE OF JOINT VENTURE

19	$
19	$
19	$
19	$
19	$
19	$
AVERAGE ANNUAL $ INCOME	

LARGEST JOB IN PAST SIX YEARS

CONTRACT AMOUNT	DATE

DESCRIPTION

OWNER

V – LARGEST JOB EVER CONTRACTED (If Other Than In Past Six Years)

CONTRACT AMOUNT	DATE

DESCRIPTION

OWNER

VI – TYPE OF WORK IN WHICH FIRM SPECIALIZES

VII – TYPE OF WORK AND ACCEPTABLE LOCATIONS FOR WHICH FIRM DESIRES TO BE CONSIDERED

VIII – COST-REIMBURSEMENT TYPE CONTRACTS

AGENCY OR OWNER	DATE	DESCRIPTION	AMOUNT

TYPED NAME AND POSITION OR TITLE OF PERSON SIGNING

SIGNATURE

NOTE: Use reverse side for remarks, explanations, or detailed description of items reported above.

SCHEDULE A

CONSTRUCTION CONTRACTOR EXPERIENCE DATA

EXISTING COMMITMENTS: (List below the construction projects your firm has under way on this date, including those on which you are presently low bidder but have not received an award.)

CONTRACT NUMBER AND AMOUNT	DESCRIPTION OF WORK	FOR WHOM PERFORMED*	PERCENT COMPLETE	PERCENT SUBLET

* PROVIDE NAME OF ORGANIZATION, POINT OF CONTACT AND TELEPHONE NUMBER FOR CONTACT.

SCHEDULE B

CONSTRUCTION CONTRACTOR EXPERIENCE DATA

EXPERIENCE DATA: (List below the principal construction projects your firm has completed within the past six (6) years.)

CONTRACT NO.	AMOUNT	DESCRIPTION/LOCATION	CONTACT PERSON/PHONE NO	PERCENT SUBLET

SCHEDULE C

CONSTRUCTION CONTRACTOR EXPERIENCE DATA

CONSTRUCTION AND/OR TECHNICAL EQUIPMENT: (List total equipment and facilities owned for performing the work and present status as to whether or not it is committed to existing contracts.)

QUANTITY	DESCRIPTION	CONDITION	YEARS OF SERVICE	PRESENT STATUS

SCHEDULE D

CONSTRUCTION CONTRACTOR EXPERIENCE DATA

TO BE COMPLETED IF PROPOSED MILITARY CONSTRUCTION CONTRACT EXCEEDS $1,000,000.

A. Each contract awarded within the preceding three-month period exceeding $1,000,000 in value with brief description of the contract:

B. Each contract awarded within the preceding three-year period not already physically completed and exceeding $5,000,000 in value with brief description of the contract:

TECHNICAL SPECIFICATIONS

TABLE OF CONTENTS

TECHNICAL SPECIFICATIONS

SECTION	TITLE
	DIVISION 1 - GENERAL REQUIREMENTS
01330	SUBMITTAL PROCEDURES
01410	ENVIRONMENT PROTECTION
01415	METRIC MEASUREMENT
01451	CONTRACTOR QUALITY CONTROL
01500	TEMPORARY CONSTRUCTION FACILITIES
01505	GENERAL REQUIREMENTS
	DIVISION 2 - SITE WORK
02050	DEMOLITION
02052	RENOVATION REQUIREMENTS FOR STRUCTURES CONTAINING LEAD-BASED PAINT
02080	ASBESTOS ABATEMENT
02221	EXCAVATION, FILLING AND BACKFILLING FOR BUILDINGS
02222	EXCAVATION, TRENCHING AND BACKFILLING FOR UTILITIES SYSTEMS
02225	EARTHWORK FOR ROADWAYS
02230	CLEARING AND GRUBBING
02232	SUBBASE COURSE
02241	AGGREGATE BASE COURSE
02513	BITUMINOUS COURSE
02546	AGGREGATE SURFACE COURSE
02592	FIELD MOLDED SEALANTS FOR SEALING JOINTS IN RIGID PAVEMENTS
02611	CONCRETE PAVEMENT FOR PADS
02660	WATER LINES
02730	SANITARY SEWERS
02831	FENCE, CHAIN-LINK
	DIVISION 3 - CONCRETE
03100	STRUCTURAL CONCRETE FORMWORK
03200	CONCRETE REINFORCEMENT
03250	EXPANSION JOINTS AND CONTRACTION JOINTS
03300	CONCRETE FOR BUILDING CONSTRUCTION
	DIVISION 4 - MASONRY
	NOT USED
	DIVISION 5 - METALS
05500	MISCELLANEOUS METAL
	DIVISION 6 - WOOD AND PLASTICS
06100	ROUGH CARPENTRY
06200	FINISH CARPENTRY

DIVISION 7 - THERMAL AND MOISTURE PROTECTION

07270 FIRESTOPPING
07416 STRUCTURAL STANDING SEAM METAL ROOF SYSTEM
07600 SHEET METALWORK, GENERAL
07900 JOINT SEALING

DIVISION 8 - DOORS AND WINDOWS

08110 STEEL DOORS AND FRAMES
08330 OVERHEAD ROLLING DOORS
08520 ALUMINUM WINDOWS
08700 BUILDER'S HARDWARE
08810 GLASS AND GLAZING

DIVISION 9 - FINISHES

09250 GYPSUM WALLBOARD
09310 CERAMIC TILE
09510 ACOUSTICAL CEILINGS
09650 RESILIENT FLOORING
09900 PAINTING, GENERAL

DIVISION 10 - SPECIALTIES

10800 TOILET ACCESSORIES

DIVISION 11 - EQUIPMENT

NOT USED

DIVISION 12 - FURNISHINGS

NOT USED

DIVISION 13 - SPECIAL CONSTRUCTION

13080 SEISMIC PROTECTION FOR MECHANICAL, ELECTRICAL EQUIPMENT
13120 STANDARD METAL BUILDING SYSTEMS

DIVISION 14 - CONVEYING SYSTEMS

NOT USED

DIVISION 15 - MECHANICAL

15250 THERMAL INSULATION FOR MECHANICAL SYSTEMS
15400 PLUMBING (GENERAL PURPOSE)
15488 GAS PIPING SYSTEMS
15565 HEATING SYSTEM; GAS-FIRED HEATERS
15666 WARM AIR HEATING SYSTEM
15653 AIR-CONDITIONING SYSTEM (UNITARY-TYPE)
15895 AIR SUPPLY AND DISTRIBUTION SYSTEM FOR AIR-CONDITIONING SYSTEM
15950 HEATING, VENTILATING AND AIR CONDITIONING HVAC CONTROL SYSTEMS
15990 TESTING, ADJUSTING AND BALANCING OF HVAC SYSTEM

DIVISION 16 - ELECTRICAL

16370	ELECTRICAL DISTRIBUTION SYSTEM, AERIAL
16375	ELECTRICAL DISTRIBUTION SYSTEM, UNDERGROUND
16415	ELECTRICAL WORK, INTERIOR
16528	EXTERIOR LIGHTING
16670	LIGHTNING PROTECTION SYSTEM
16710	PREMISES DISTRIBUTION SYSTEM
16711	TELEPHONE SYSTEM, OUTSIDE PLANT
16721	FIRE DETECTION AND ALARM SYSTEM
16722	FIRE ALARM REPORTING SYSTEM, RADIO TYPE

* * * * *

INDEX

SECTION 01330

SUBMITTAL PROCEDURES

PARAGRAPH		PAGE
PART 1	GENERAL	1
1.1	SUBMITTAL IDENTIFICATION	1
1.2	SUBMITTAL CLASSIFICATION	1
1.3	SUBMITTAL REVIEW AND APPROVAL	1
1.4	APPROVED SUBMITTALS	2
1.5	DISAPPROVED SUBMITTALS	2
1.6	SUBMITTALS	2
1.7	PAYMENT FOR ITEMS FOR WHICH A SUBMITTAL AND APPROVAL IS REQUIRED	2
PART 2	PRODUCTS (Not Applicable)	3
PART 3	EXECUTION	3
3.1	GENERAL	3
3.2	SUBMITTAL REGISTER (ENG FORM 4288)	3
3.3	SCHEDULING	3
3.4	TRANSMITTAL FORM (ENG FORM 4025)	4
3.5	SUBMITTAL PROCEDURE	4
3.6	MECHANICAL ROOM LAYOUT DRAWINGS:	5
3.7	SPARE PARTS LIST AND MAINTENANCE OPERATIONS MANUALS:	5
3.8	AS-BUILT DRAWINGS	6
3.9	CONTROL OF SUBMITTALS	7
3.10	GOVERNMENT APPROVED SUBMITTALS	7
3.11	INFORMATION ONLY SUBMITTALS	7
3.12	STAMPS	8

SECTION 01330

SUBMITTAL PROCEDURES

PART 1 GENERAL

1.1 SUBMITTAL IDENTIFICATION

SD-01 Data

SD-04 Drawings

SD-06 Instructions

SD-07 Schedules

SD-08 Statements

SD-09 Reports

SD-13 Certificates

SD-14 Samples

SD-18 Records

SD-19 Operation and Maintenance Manuals

1.2 SUBMITTAL CLASSIFICATION

Submittals are classified as follows:

1.2.1 Government Approved

Governmental approval is required for extensions of design, critical materials, deviations, equipment whose compatibility with the entire system must be checked, and other items as designated by the Contracting Officer. Within the terms of the Contract Clause entitled "Specifications and Drawings for Construction," they are considered to be "shop drawings."

1.2.2 Information Only

All submittals not requiring Government approval will be for information only. They are not considered to be "shop drawings" within the terms of the Contract Clause referred to above.

1.3 SUBMITTAL REVIEW AND APPROVAL

Before submission, Contractor shall review all submittals prepared by subcontractors, suppliers, and himself, for completeness, accuracy, and compliance with plans and specifications. Contractor shall not use red markings on submittals. Red markings are reserved for use by the Contracting Officer. Approval by Contractor shall be indicated on each drawing by an "Approved" stamp with Contractor's name, signature, and date. The Contractor shall have independent agents not associated with his organization to do the review. The review shall be done by a licensed architect or registered engineers in the appropriate disciplines of architectural, civil, structural, mechanical and electrical, as appropriate. The reviews shall be thorough and complete and authenticated by registered engineer's or architect's stamp. This administration of submittal review must be integrated into the

Contractor's Quality Control Plan. The plan must delineate in precise detail how the Contractor intends to satisfy this requirement. This should include names of organizations, qualifications and names of individuals who will be doing the work with their qualifications/resumes. Supplier's or subcontractors certifications are not acceptable as meeting this requirement of independent review. Submittals not conforming to the requirements of this section will be returned to the Contractor for correction and resubmittal.

1.4 APPROVED SUBMITTALS

The Contracting Officer's approval of submittals shall not be construed as a complete check, but will indicate only that the general method of construction, materials, detailing and other information are satisfactory. Approval will not relieve the Contractor of the responsibility for any error which may exist, as the Contractor under the CQC requirements of this contract is responsible for dimensions, the design of adequate connections and details, and the satisfactory construction of all work. After submittals have been approved by the Contracting Officer, no resubmittal for the purpose of substituting materials or equipment will be considered unless accompanied by an explanation of why a substitution is necessary.

1.5 DISAPPROVED SUBMITTALS

The Contractor shall make all corrections required by the Contracting Officer and promptly furnish a corrected submittal in the form and number of copies specified for the initial submittal. If the Contractor considers any correction indicated on the submittals to constitute a change to the contract, a notice in accordance with the Contract Clause "Changes" shall be given promptly to the Contracting Officer.

1.6 SUBMITTALS

The Contractor may be required to mail Submittals to multiple locations as directed. The location(s) for Government review of Contractor Submittals will be determined at a meeting between the Contractor and the Administrative Contracting Officer.

1.7 PAYMENT FOR ITEMS FOR WHICH A SUBMITTAL AND APPROVAL IS REQUIRED

In accordance with FAR 52.232-5, "Payments Under Fixed-Price Construction Contracts", the Government shall make progress payments to the Contractor monthly based on estimates of work accomplished which meets the standards of quality established under the contract. On items for which submittals must be approved by the Contracting Officer, payment cannot be made for the item until the Government establishes that the item "meets the standards of quality" required by the contract. The Contractor shall not invoice for, nor shall the Government make payment for any item, for which submittal and approval is required, until the item has been submitted and approved as described herein.

PART 2 PRODUCTS (Not Applicable)

PART 3 EXECUTION

3.1 GENERAL

The Contractor shall make submittals as required by the specifications. The Contracting Officer may request submittals in addition to those specified when deemed necessary to adequately describe the work covered in the respective sections. Units of weights and measures used on all submittals shall be the same as those used in the contract drawings. Each submittal shall be complete

and in sufficient detail to allow ready determination of compliance with contract requirements. Prior to submittal, all items shall be checked and approved by the Contractor's Quality Control (CQC) representative and each item shall be stamped, signed, and dated by the CQC representative indicating action taken. Proposed deviations from the contract requirements shall be clearly identified. Submittals shall include items such as: Contractor's, manufacturer's, or fabricator's drawings; descriptive literature including (but not limited to) catalog cuts, diagrams, operating charts or curves; test reports; test cylinders; samples; O&M manuals (including parts list); certifications; warranties; and other such required submittals. Submittals requiring Government approval shall be scheduled and made prior to the acquisition of the material or equipment covered thereby. Samples remaining upon completion of the work shall be picked up and disposed of in accordance with manufacturer's Material Safety Data Sheets (MSDS) and in compliance with existing laws and regulations.

3.2 SUBMITTAL REGISTER (ENG FORM 4288)

At the end of this section is one set of ENG Form 4288 listing items of equipment and materials for which submittals are required by the specifications; this list may not be all inclusive and additional submittals may be required. Columns "d" through "q" have been completed by the Government; the Contractor shall complete columns "a" and "r" through "t" and submit the forms to the Contracting Officer for approval within thirty (30) calendar days after Notice to Proceed. The approved submittal register will become the scheduling document and will be used to control submittals throughout the life of the contract. The submittal register and the progress schedules shall be coordinated.

3.3 SCHEDULING

Submittals covering component items forming a system or items that are interrelated shall be scheduled to be coordinated and submitted concurrently. Certifications to be submitted with the pertinent drawings shall be so scheduled. Adequate time (a minimum of 35 calendar days exclusive of mailing time) shall be allowed and shown on the register for review and approval. No delay damages or time extensions will be allowed for time lost in late submittals.

3.4 TRANSMITTAL FORM (ENG FORM 4025)

The Contractor shall complete ENG Form 4025, "Transmittal of Shop Drawings, Equipment Data, Material Samples, or Manufacturer's Certificates of Compliance" and forward six (6) copies of same with each set of shop drawings, certificates of compliance, materials, fixtures and equipment lists submitted for approval. Four (4) copies of the ENG Form 4025 shall be submitted for information only data. No translucent or coated reproduced copies will be accepted. Each item submitted shall be listed separately on the ENG Form 4025. For new submittals or resubmittals mark the appropriate box; or resubmittals also insert previous transmittal number. Blank ENG Forms 4025 will be furnished by the Contracting Officer on request. Shop drawings shall be either blue line or black line prints on a white background. Blueprints are not acceptable. Each submittal shall be identified with the Contractor's name, Contract Number, Transmittal Number, and Item Number to correspond with Item Number listed on ENG Form 4288. The following identification shall be marked on submittals as applicable:

Contract Number
Project Title and Location
Subcontractor's Name

Supplier's Name or Manufacturer's Name
Specification Section and Paragraph Number
Contract Drawing File Number

3.5 SUBMITTAL PROCEDURE

Submittals shall be made as follows:

3.5.1 Procedures

Submittals required by the CONTRACT CLAUSES and other non-technical parts of the contract are not included in this section. The Contractor shall submit to the Contracting Officer: six (6) copies for approval, and four (4) copies for information only, of all shop drawings, certificates of compliance, materials, fixtures and equipment lists called for under the various headings of these specifications. These drawings, certificates and lists shall be complete and detailed and, prior to submission, must be reviewed and certified correct by the Contractor as required by the Quality Control System paragraph of the Construction Quality Control Section. If approved by the Contracting Officer, four (4) sets of all submittals will be retained by the Contracting Officer and two (2) sets will be returned to the Contractor. Submittals for information only usually will not be returned. The Contractor is encouraged to submit paper documents that are printed/copied double-sided on recycled paper that has at least 20% postconsumer material.

3.5.2 Deviations

For submittals which include proposed deviations requested by the Contractor, the column "variation" of ENG Form 4025 shall be checked. The Contractor shall set forth in writing the reason for any deviations and annotate such deviations on the submittal. The Government reserves the right to rescind inadvertent approval of submittals containing unnoted deviations.

3.6 MECHANICAL ROOM LAYOUT DRAWINGS:

The Contractor shall submit a layout drawing, including appropriate elevations and sections as required, for each Mechanical Room showing the room arrangement he proposes for all pieces of equipment and appurtenances thereto (viz., air-conditioning equipment, boilers, compressors, hot water tanks, pumps, electrical control panels, ducts, piping, etc.), that are to be located in the room. The Mechanical Room floor slab will not be placed until the complete Mechanical Room layout drawing has been submitted and approved. No payment will be made to the Contractor for any of the equipment for the room or its installation until these drawings have been approved. Mechanical Room Layout Drawings shall be identified and submitted in the manner specified for "Shop Drawings". Equipment rooms shown on the drawings are of adequate size to accommodate equipment of required capacities, as available from several manufacturers, with sufficient space left for access, servicing, removal, etc. The use of equipment items with dimensions such as to crowd the space will not be permitted.

3.7 SPARE PARTS LIST AND MAINTENANCE OPERATIONS MANUALS:

Within 30 calendar days after approval of shop drawings and equipment lists, the Contractor shall submit, to the Contracting Officer, **3** copies of spare parts lists and operating and maintenance manuals as required under the various headings of these specifications.

(A) Spare parts lists shall contain the following listed information:

(1) Quantity of parts required for 120 days and one year of operation.

(2) Description of each spare part.

(3) Drawing number and shop drawing reference.

(4) Part equipment code number.

(5) Unit price of each item.

(6) Total price of all items.

(7) Procurement lead time with particular attention to long lead times.

(8) Name and address of nearest supplier.

(9) Such remarks and data as the manufacturer may consider pertinent.

(10) Complete parts list of all replaceable items.

(B) Operation, Maintenance, and Repair Manuals and Instructions:

(1) The requirements for furnishing operating, maintenance, and repair data/manuals and field instructions under this contract are specified in the Technical Specifications. The Contractor shall submit to the Contracting Officer, not later than 60 calendar days after the Notice to Proceed, an outline showing the proposed submittal date(s) of operation and maintenance manuals to be furnished the Government and the scheduled date(s) of all required field instructions to be provided by Contractor furnished personnel or manufacturer's representatives. All operation and maintenance manuals must be furnished to the Contracting Officer not later than 60 calendar days prior to turnover of the facility to the Government.

3.8 AS-BUILT DRAWINGS

(Internet Address: http://www.cbbs.spk.usace.army.mil/html/aeguide.html .)

3.8.1 Definitions

3.8.2 Working As-Built Drawings. The Contractor shall maintain a current record of the work as actually constructed in the form of working as-built drawings. These will typically be red-line mark-ups of the construction plans. The quantity of sets to be red-lined can be found under the paragraph below, Submittal Requirements for Review and Approval . It is the Contractor’s responsibility to ensure the use of the most current drawings. Subject to the approval of the Contracting Officer, a member of the Contractor’s Quality Control Organization will be assigned the sole responsibility for the maintenance and currency of the as-built drawings. Any reassignment of duties concerning the maintenance of the as-built drawings will be promptly reported to the Contracting Officer. Guidelines and drafting standards for preparing working and final as-built drawings can be found on the Internet.

These instructions include submittal requirements for shop drawings.

3.8.3 Final As-Built Drawings. The Contractor shall prepare final, record copy drawings which depict the actual conditions upon completion of

construction. The deliverable required shall be in both hard copy and electronic format.

3.8.3.1 Submittal Requirements for Review and Approval.

3.8.3.1.1 Timeframes

3.8.3.1.1.1 Working as-built drawings.(GA) Three sets of red-line markups shall be submitted after the completion of each major phase of work (or bid items, if appropriate), in conjunction with approval of progress payments.

3.8.3.1.1.2 Final as-built drawings.(GA) All three sets of red-line markups and one new set (hard copy bond or blue-line) of completed final as-built drawings shall be submitted for review within 10 working days prior to the pre-final inspection. If upon review, the drawings are found to contain errors and/or omissions, they shall be returned to the Contractor for corrections.

Within 15 calendar days after the final project inspection, the Contractor shall submit for approval the one copy of updated red-line mark-up CADD files depicting final as-built conditions. If upon review by the Sacramento District, the drawings are found to contain errors and/or omissions, they shall be returned to the Contractor for corrections.

Within 45 calendar days after the final inspection, the Contractor shall transfer the final as-built drawings to the Government according to Paragraph, End-User (Customer Requirements).

3.8.4 End-User (Customer) Requirements

3.8.4.1 CADD Format.

AutoCAD Release 14 for use on NT 4.0 Operating System or Microstation 95 SE for use on Windows 98 Operating System. (No conversion of format will be allowed.)

3.8.4.2 Hard Copy Media and Quantities.

One full size 559 mm x 391 mm on vellum and two (2) half-size 11" x 17" on bond.

3.8.5 Delivering electronic files.

Specific instructions for labeling disks or CD-ROMs, directory structure, indexing and additional documentation requirements are listed on the Internet.

3.9 CONTROL OF SUBMITTALS

The Contractor shall carefully control his procurement operations to ensure that each individual submittal is made on or before the Contractor scheduled submittal date shown on the approved "Submittal Register."

3.10 GOVERNMENT APPROVED SUBMITTALS

Upon completion of review of submittals requiring Government approval, the submittals will be identified as having received approval by being so stamped and dated. Four (4) copies of the submittal will be retained by the Contracting Officer and two (2) copies of the submittal will be returned to the Contractor.

3.11 INFORMATION ONLY SUBMITTALS

Normally submittals for information only will not be returned. Approval of the Contracting Officer is not required on information only submittals. The Government reserves the right to require the Contractor to resubmit any item found not to comply with the contract. This does not relieve the Contractor from the obligation to furnish material conforming to the plans and specifications; will not prevent the Contracting Officer from requiring removal and replacement of nonconforming material incorporated in the work; and does not relieve the Contractor of the requirement to furnish samples for testing by the Government laboratory or for check testing by the Government in those instances where the technical specifications so prescribe.

3.12 STAMPS

Stamps used by the Contractor on the submittal data to certify that the submittal meets contract requirements shall be similar to the following:

CONTRACTOR
(Firm Name)
_____ Approved
_____ Approved with corrections as noted on submittal data and/or attached sheets(s).
SIGNATURE: _____
TITLE: _____
DATE: _____

-- End of Section --

SUBMITTAL REGISTER
(ER 415 1-10)

CONTRACT NO.

TITLE AND LOCATION
MILVAN Support Facility, Tooele AD

CONTRACTOR

SPECIFICATION SECTION
02050

ACTIVITY NO. a.	TRANS-MITTAL NO. b.	ITEM NO c.	SPECIFICATION PARAGRAPH NUMBER d.	DESCRIPTION OF ITEM SUBMITTED e.	TYPE OF SUBMITTAL: DATA f.	DRAWINGS g.	INSTRUCTIONS h.	SCHEDULES i.	STATEMENTS j.	REPORTS k.	CERTIFICATES l.	SAMPLES m.	RECORDS n.	O&M MANUALS o.	CLASSIFICATION: INFORMATION ONLY p.	GOVERNMENT APPROVED q.	REVIEWER r.	CONTRACTOR SCHEDULE DATES: SUBMIT s.	APPROVAL NEEDED BY t.	MATERIAL NEEDED BY u.	CONTRACTOR ACTION: CODE v.	DATE w.	SUBMIT TO GOVERN-MENT x.	GOVERNMENT ACTION: CODE y.	DATE z.	REMARKS aa.
			1.3	Work Plan					X						X											

SUBMITTAL REGISTER
(ER 415 1-10)

CONTRACT NO.

TITLE AND LOCATION
MILVAN Support Facility, Tooele AD

CONTRACTOR

SPECIFICATION SECTION
02080

ACTIVITY NO. a.	TRANS-MITTAL NO. b.	ITEM NO. c.	SPECIFICATION PARAGRAPH NUMBER d.	DESCRIPTION OF ITEM SUBMITTED e.	TYPE OF SUBMITTAL: DATA f.	DRAWINGS g.	INSTRUCTIONS h.	SCHEDULES i.	STATEMENTS j.	REPORTS k.	CERTIFICATES l.	SAMPLES m.	RECORDS n.	O&M MANUALS o.	CLASSIFICATION: INFORMATION ONLY p.	GOVERNMENT APPROVED q.	REVIEWER r.	CONTRACTOR SCHEDULE DATES: SUBMIT s.	APPROVAL NEEDED BY t.	MATERIAL NEEDED BY u.	CONTRACTOR ACTION: CODE v.	DATE w.	SUBMIT TO GOVERN-MENT x.	GOVERNMENT ACTION: CODE y.	DATE z.	REMARKS aa.
			1.12	Materials and Equipment	X										X											
			1.12	Safety Plan	X											X										
			1.12	Asbestos Hazard Abatement Plan	X											X										
			1.12	Initial Exposure Assessment	X																					
			1.12	Site Layout		X										X										
			1.12	Qualification					X							X										
			1.12	Designated Industrial Hygienist					X							X										
				Qualifications																						
			1.12	Landfill and Transporter					X							X										
				Qualifications																						
			1.12	Employee Training and Certification					X							X										
				of Worker Acknowledgment																						
			1.12	Training Material					X						X											
			1.12	Certification of Medical					X							X										
				Requirements																						
			1.12	Negative Exposure Assessment						X																
			1.12	GA.						X																
			1.12	Field Tests						X					X											
			1.12	Air Sampling Results						X						X										
			1.12	Notifications						X						X										
			1.12	Respirator Program									X			X										
			1.12	Asbestos Waste Shipment									X			X										

SUBMITTAL REGISTER
(ER 415 1-10)

CONTRACT NO.

TITLE AND LOCATION
MILVAN Support Facility, Tooele AD

CONTRACTOR

SPECIFICATION SECTION
02221

ACTIVITY NO. a.	TRANS-MITTAL NO. b.	ITEM NO c.	SPECIFICATION PARAGRAPH NUMBER d.	DESCRIPTION OF ITEM SUBMITTED e.	TYPE OF SUBMITTAL: DATA f.	DRAWINGS g.	INSTRUCTIONS h.	SCHEDULES i.	STATEMENTS j.	REPORTS k.	CERTIFICATES l.	SAMPLES m.	RECORDS n.	O&M MANUALS o.	CLASSIFICATION: INFORMATION ONLY p.	GOVERNMENT APPROVED q.	REVIEWER r.	CONTRACTOR SCHEDULE DATES: SUBMIT s.	APPROVAL NEEDED BY t.	MATERIAL NEEDED BY u.	CONTRACTOR ACTION: CODE v.	DATE w.	SUBMIT TO GOVERN-MENT x.	GOVERNMENT ACTION: CODE y.	DATE z.	REMARKS aa.
			3.12	Field Testing Control						X					X											
			1.4	Select Material, Bridging Material						X						X										

SUBMITTAL REGISTER
(ER 415 1-10)

CONTRACT NO.

TITLE AND LOCATION
MILVAN Support Facility, Tooele AD

CONTRACTOR

SPECIFICATION SECTION
02222

ACTIVITY NO. a.	TRANS-MITTAL NO. b.	ITEM NO c.	SPECIFICATION PARAGRAPH NUMBER d.	DESCRIPTION OF ITEM SUBMITTED e.	TYPE OF SUBMITTAL: DATA f.	DRAWINGS g.	INSTRUCTIONS h.	SCHEDULES i.	STATEMENTS j.	REPORTS k.	CERTIFICATES l.	SAMPLES m.	RECORDS n.	O&M MANUALS o.	CLASSIFICATION: INFORMATION ONLY p.	GOVERNMENT APPROVED q.	REVIEWER r.	CONTRACTOR SCHEDULE DATES: SUBMIT s.	APPROVAL NEEDED BY t.	MATERIAL NEEDED BY u.	CONTRACTOR ACTION: CODE v.	DATE w.	SUBMIT TO GOVERN-MENT x.	GOVERNMENT ACTION: CODE y.	DATE z.	REMARKS aa.
			3.4	Field Testing Control						X					X											
			2.1.3	Initial Backfill Materials						X						X										

SUBMITTAL REGISTER
(ER 415 1-10)

CONTRACT NO.

TITLE AND LOCATION
MILVAN Support Facility, Tooele AD

CONTRACTOR

SPECIFICATION SECTION
02225

ACTIVITY NO. a.	TRANS-MITTAL NO. b.	ITEM NO c.	SPECIFICATION PARAGRAPH NUMBER d.	DESCRIPTION OF ITEM SUBMITTED e.	TYPE OF SUBMITTAL: DATA f.	DRAWINGS g.	INSTRUCTIONS h.	SCHEDULES i.	STATEMENTS j.	REPORTS k.	CERTIFICATES l.	SAMPLES m.	RECORDS n.	O&M MANUALS o.	CLASSIFICATION: INFORMATION ONLY p.	GOVERNMENT APPROVED q.	REVIEWER r.	CONTRACTOR SCHEDULE DATES: SUBMIT s.	APPROVAL NEEDED BY t.	MATERIAL NEEDED BY u.	CONTRACTOR ACTION: CODE v.	DATE w.	SUBMIT TO GOVERN-MENT x.	GOVERNMENT ACTION: CODE y.	DATE z.	REMARKS aa.
			3.8	Field Testing Control					X							X										
			2.2.2	Select Material						X						X										
			2.2.3	Bridging Material						X						X										
			3.8	Field Testing Control						X					X											

SUBMITTAL REGISTER
(ER 415 1-10)

CONTRACT NO.

TITLE AND LOCATION
MILVAN Support Facility, Tooele AD

CONTRACTOR

SPECIFICATION SECTION
02232

ACTIVITY NO. a.	TRANS-MITTAL NO. b.	ITEM NO c.	SPECIFICATION PARAGRAPH NUMBER d.	DESCRIPTION OF ITEM SUBMITTED e.	TYPE OF SUBMITTAL: DATA f.	DRAWINGS g.	INSTRUCTIONS h.	SCHEDULES i.	STATEMENTS j.	REPORTS k.	CERTIFICATES l.	SAMPLES m.	RECORDS n.	O&M MANUALS o.	CLASSIFICATION: INFORMATION ONLY p.	GOVERNMENT APPROVED q.	REVIEWER r.	CONTRACTOR SCHEDULE DATES: SUBMIT s.	APPROVAL NEEDED BY t.	MATERIAL NEEDED BY u.	CONTRACTOR ACTION: CODE v.	DATE w.	SUBMIT TO GOVERN-MENT x.	GOVERNMENT ACTION: CODE y.	DATE z.	REMARKS aa.
			1.5	Equipment	X										X											
			3.10	Field Testing Control						X					X											
			1.3	SD-09 Reports						X																
			1.3	Subbase Material						X						X										

SUBMITTAL REGISTER
(ER 415 1-10)

CONTRACT NO.

TITLE AND LOCATION
MILVAN Support Facility, Tooele AD

CONTRACTOR

SPECIFICATION SECTION
02241

ACTIVITY NO. a.	TRANS-MITTAL NO. b.	ITEM NO c.	SPECIFICATION PARAGRAPH NUMBER d.	DESCRIPTION OF ITEM SUBMITTED e.	TYPE OF SUBMITTAL: DATA f.	DRAWINGS g.	INSTRUCTIONS h.	SCHEDULES i.	STATEMENTS j.	REPORTS k.	CERTIFICATES l.	SAMPLES m.	RECORDS n.	O&M MANUALS o.	CLASSIFICATION: INFORMATION ONLY p.	GOVERNMENT APPROVED q.	REVIEWER r.	CONTRACTOR SCHEDULE DATES: SUBMIT s.	APPROVAL NEEDED BY t.	MATERIAL NEEDED BY u.	CONTRACTOR ACTION: CODE v.	DATE w.	SUBMIT TO GOVERN-MENT x.	GOVERNMENT ACTION: CODE y.	DATE z.	REMARKS aa.
			1.6	Plant, Equipment, Machines, and	X										X											
				Tools																						
			1.8	Sampling and Testing						X						X										
			1.8	Sampling and Testing						X					X											
			3.5	Field Quality Control						X					X											

SUBMITTAL REGISTER
(ER 415 1-10)

CONTRACT NO.

TITLE AND LOCATION
MILVAN Support Facility, Tooele AD

CONTRACTOR

SPECIFICATION SECTION
02513

ACTIVITY NO. a.	TRANS-MITTAL NO. b.	ITEM NO c.	SPECIFICATION PARAGRAPH NUMBER d.	DESCRIPTION OF ITEM SUBMITTED e.	TYPE OF SUBMITTAL: DATA f.	DRAWINGS g.	INSTRUCTIONS h.	SCHEDULES i.	STATEMENTS j.	REPORTS k.	CERTIFICATES l.	SAMPLES m.	RECORDS n.	O&M MANUALS o.	CLASSIFICATION: INFORMATION ONLY p.	GOVERNMENT APPROVED q.	REVIEWER r.	CONTRACTOR SCHEDULE DATES: SUBMIT s.	APPROVAL NEEDED BY t.	MATERIAL NEEDED BY u.	CONTRACTOR ACTION: CODE v.	DATE w.	SUBMIT TO GOVERN-MENT x.	GOVERNMENT ACTION: CODE y.	DATE z.	REMARKS aa.
			1.3	Bituminous Pavement						X					X											

SUBMITTAL REGISTER
(ER 415 1-10)

CONTRACT NO.

TITLE AND LOCATION
MILVAN Support Facility, Tooele AD

CONTRACTOR

SPECIFICATION SECTION
02546

ACTIVITY NO. a.	TRANS-MITTAL NO. b.	ITEM NO c.	SPECIFICATION PARAGRAPH NUMBER d.	DESCRIPTION OF ITEM SUBMITTED e.	TYPE OF SUBMITTAL: DATA f.	DRAWINGS g.	INSTRUCTIONS h.	SCHEDULES i.	STATEMENTS j.	REPORTS k.	CERTIFICATES l.	SAMPLES m.	RECORDS n.	O&M MANUALS o.	CLASSIFICATION: INFORMATION ONLY p.	GOVERNMENT APPROVED q.	REVIEWER r.	CONTRACTOR SCHEDULE DATES: SUBMIT s.	APPROVAL NEEDED BY t.	MATERIAL NEEDED BY u.	CONTRACTOR ACTION: CODE v.	DATE w.	SUBMIT TO GOVERN-MENT x.	GOVERNMENT ACTION: CODE y.	DATE z.	REMARKS aa.
			1.5	Equipment	X										X											
			3.7	Sampling and Testing						X						X										
			1.4	Density Test						X						X										

SUBMITTAL REGISTER
(ER 415 1-10)

CONTRACT NO.

TITLE AND LOCATION
MILVAN Support Facility, Tooele AD

CONTRACTOR

SPECIFICATION SECTION
02558

ACTIVITY NO. a.	TRANS-MITTAL NO. b.	ITEM NO c.	SPECIFICATION PARAGRAPH NUMBER d.	DESCRIPTION OF ITEM SUBMITTED e.	TYPE OF SUBMITTAL: DATA f.	DRAWINGS g.	INSTRUCTIONS h.	SCHEDULES i.	STATEMENTS j.	REPORTS k.	CERTIFICATES l.	SAMPLES m.	RECORDS n.	O&M MANUALS o.	CLASSIFICATION: INFORMATION ONLY p.	GOVERNMENT APPROVED q.	REVIEWER r.	CONTRACTOR SCHEDULE DATES: SUBMIT s.	APPROVAL NEEDED BY t.	MATERIAL NEEDED BY u.	CONTRACTOR ACTION: CODE v.	DATE w.	SUBMIT TO GOVERN-MENT x.	GOVERNMENT ACTION: CODE y.	DATE z.	REMARKS aa.
			1.2	Tests						X					X											
			1.2	Waybills and Delivery Tickets									X		X											

SUBMITTAL REGISTER
(ER 415 1-10)

CONTRACT NO.

TITLE AND LOCATION
MILVAN Support Facility, Tooele AD

CONTRACTOR

SPECIFICATION SECTION
02592

ACTIVITY NO. a.	TRANS-MITTAL NO. b.	ITEM NO c.	SPECIFICATION PARAGRAPH NUMBER d.	DESCRIPTION OF ITEM SUBMITTED e.	TYPE OF SUBMITTAL: DATA f.	DRAWINGS g.	INSTRUCTIONS h.	SCHEDULES i.	STATEMENTS j.	REPORTS k.	CERTIFICATES l.	SAMPLES m.	RECORDS n.	O&M MANUALS o.	CLASSIFICATION: INFORMATION ONLY p.	GOVERNMENT APPROVED q.	REVIEWER r.	CONTRACTOR SCHEDULE DATES: SUBMIT s.	APPROVAL NEEDED BY t.	MATERIAL NEEDED BY u.	CONTRACTOR ACTION: CODE v.	DATE w.	SUBMIT TO GOVERN-MENT x.	GOVERNMENT ACTION: CODE y.	DATE z.	REMARKS aa.
			1.2	Manufacturer's Recommendations			X								X											
			1.2	Construction Equipment List				X							X											
			1.2	Materials								X				X										

SUBMITTAL REGISTER
(ER 415 1-10)

CONTRACT NO.

TITLE AND LOCATION
MILVAN Support Facility, Tooele AD

CONTRACTOR

SPECIFICATION SECTION
02611

ACTIVITY NO. a.	TRANS-MITTAL NO. b.	ITEM NO c.	SPECIFICATION PARAGRAPH NUMBER d.	DESCRIPTION OF ITEM SUBMITTED e.	TYPE OF SUBMITTAL: DATA f.	DRAWINGS g.	INSTRUCTIONS h.	SCHEDULES i.	STATEMENTS j.	REPORTS k.	CERTIFICATES l.	SAMPLES m.	RECORDS n.	O&M MANUALS o.	CLASSIFICATION: INFORMATION ONLY p.	GOVERNMENT APPROVED q.	REVIEWER r.	CONTRACTOR SCHEDULE DATES: SUBMIT s.	APPROVAL NEEDED BY t.	MATERIAL NEEDED BY u.	CONTRACTOR ACTION: CODE v.	DATE w.	SUBMIT TO GOVERN-MENT x.	GOVERNMENT ACTION: CODE y.	DATE z.	REMARKS aa.
			1.2	Proportions of Mix						X						X										
			1.2	Plant and Equipment	X											X										
			1.2	Sampling and Testing						X					X											
			3.21	Deleterious Materials						X					X											
			1.2	Cementitious Materials							X				X											

SUBMITTAL REGISTER
(ER 415 1-10)

CONTRACT NO.

TITLE AND LOCATION
MILVAN Support Facility, Tooele AD

CONTRACTOR

SPECIFICATION SECTION
02660

ACTIVITY NO. a.	TRANS-MITTAL NO. b.	ITEM NO. c.	SPECIFICATION PARAGRAPH NUMBER d.	DESCRIPTION OF ITEM SUBMITTED e.	TYPE OF SUBMITTAL: DATA f.	DRAWINGS g.	INSTRUCTIONS h.	SCHEDULES i.	STATEMENTS j.	REPORTS k.	CERTIFICATES l.	SAMPLES m.	RECORDS n.	O&M MANUALS o.	CLASSIFICATION: INFORMATION ONLY p.	GOVERNMENT APPROVED q.	REVIEWER r.	CONTRACTOR SCHEDULE DATES: SUBMIT s.	APPROVAL NEEDED BY t.	MATERIAL NEEDED BY u.	CONTRACTOR ACTION: CODE v.	DATE w.	SUBMIT TO GOVERN-MENT x.	GOVERNMENT ACTION: CODE y.	DATE z.	REMARKS aa.
			3.1	Installation			X								X											
			1.3	Satisfactory Installation			X								X											
			3.3.1	Bacteriological Disinfection						X					X											
			2.7.7	Meters						X					X											

SUBMITTAL REGISTER
(ER 415 1-10)

CONTRACT NO.

TITLE AND LOCATION
MILVAN Support Facility, Tooele AD

CONTRACTOR

SPECIFICATION SECTION
02730

ACTIVITY NO. a.	TRANS-MITTAL NO. b.	ITEM NO c.	SPECIFICATION PARAGRAPH NUMBER d.	DESCRIPTION OF ITEM SUBMITTED e.	TYPE OF SUBMITTAL: DATA f.	DRAWINGS g.	INSTRUCTIONS h.	SCHEDULES i.	STATEMENTS j.	REPORTS k.	CERTIFICATES l.	SAMPLES m.	RECORDS n.	O&M MANUALS o.	CLASSIFICATION: INFORMATION ONLY p.	GOVERNMENT APPROVED q.	REVIEWER r.	CONTRACTOR SCHEDULE DATES: SUBMIT s.	APPROVAL NEEDED BY t.	MATERIAL NEEDED BY u.	CONTRACTOR ACTION: CODE v.	DATE w.	SUBMIT TO GOVERN-MENT x.	GOVERNMENT ACTION: CODE y.	DATE z.	REMARKS aa.
			1.3	Septic Tank		X										X										

SUBMITTAL REGISTER
(ER 415 1-10)

CONTRACT NO.

TITLE AND LOCATION
MILVAN Support Facility, Tooele AD

CONTRACTOR

SPECIFICATION SECTION
03100

ACTIVITY NO. a.	TRANS-MITTAL NO. b.	ITEM NO c.	SPECIFICATION PARAGRAPH NUMBER d.	DESCRIPTION OF ITEM SUBMITTED e.	TYPE OF SUBMITTAL: DATA f.	DRAWINGS g.	INSTRUCTIONS h.	SCHEDULES i.	STATEMENTS j.	REPORTS k.	CERTIFICATES l.	SAMPLES m.	RECORDS n.	O&M MANUALS o.	CLASSIFICATION: INFORMATION ONLY p.	GOVERNMENT APPROVED q.	REVIEWER r.	CONTRACTOR SCHEDULE DATES: SUBMIT s.	APPROVAL NEEDED BY t.	MATERIAL NEEDED BY u.	CONTRACTOR ACTION: CODE v.	DATE w.	SUBMIT TO GOVERN-MENT x.	GOVERNMENT ACTION: CODE y.	DATE z.	REMARKS aa.
			1.3	Design	X										X											
			1.2	Concrete Formwork	X										X											
			1.2	Concrete Formwork		X									X											
			2.1.6	Form Releasing Agents			X								X											

SUBMITTAL REGISTER
(ER 415 1-10)

CONTRACT NO.

TITLE AND LOCATION
MILVAN Support Facility, Tooele AD

CONTRACTOR

SPECIFICATION SECTION
03200

ACTIVITY NO. a.	TRANS-MITTAL NO. b.	ITEM NO c.	SPECIFICATION PARAGRAPH NUMBER d.	DESCRIPTION OF ITEM SUBMITTED e.	TYPE OF SUBMITTAL: DATA f.	DRAWINGS g.	INSTRUCTIONS h.	SCHEDULES i.	STATEMENTS j.	REPORTS k.	CERTIFICATES l.	SAMPLES m.	RECORDS n.	O&M MANUALS o.	CLASSIFICATION: INFORMATION ONLY p.	GOVERNMENT APPROVED q.	REVIEWER r.	CONTRACTOR SCHEDULE DATES: SUBMIT s.	APPROVAL NEEDED BY t.	MATERIAL NEEDED BY u.	CONTRACTOR ACTION: CODE v.	DATE w.	SUBMIT TO GOVERN-MENT x.	GOVERNMENT ACTION: CODE y.	DATE z.	REMARKS aa.
			1.2	Concrete Reinforcement System		X										X										
			1.3	Qualifications					X						X											
			2.2	Reinforcing Steel							X				X											

SUBMITTAL REGISTER
(ER 415 1-10)

CONTRACT NO.

TITLE AND LOCATION
MILVAN Support Facility, Tooele AD

CONTRACTOR

SPECIFICATION SECTION
03250

ACTIVITY NO. a.	TRANS-MITTAL NO. b.	ITEM NO c.	SPECIFICATION PARAGRAPH NUMBER d.	DESCRIPTION OF ITEM SUBMITTED e.	TYPE OF SUBMITTAL: DATA f.	DRAWINGS g.	INSTRUCTIONS h.	SCHEDULES i.	STATEMENTS j.	REPORTS k.	CERTIFICATES l.	SAMPLES m.	RECORDS n.	O&M MANUALS o.	CLASSIFICATION: INFORMATION ONLY p.	GOVERNMENT APPROVED q.	REVIEWER r.	CONTRACTOR SCHEDULE DATES: SUBMIT s.	APPROVAL NEEDED BY t.	MATERIAL NEEDED BY u.	CONTRACTOR ACTION: CODE v.	DATE w.	SUBMIT TO GOVERN-MENT x.	GOVERNMENT ACTION: CODE y.	DATE z.	REMARKS aa.
			1.2	Materials	X										X											
			1.2	Materials							X					X										

SUBMITTAL REGISTER
(ER 415 1-10)

CONTRACT NO.

TITLE AND LOCATION
MILVAN Support Facility, Tooele AD

CONTRACTOR

SPECIFICATION SECTION
03300

ACTIVITY NO. a.	TRANS-MITTAL NO. b.	ITEM NO c.	SPECIFICATION PARAGRAPH NUMBER d.	DESCRIPTION OF ITEM SUBMITTED e.	TYPE OF SUBMITTAL: DATA f.	DRAWINGS g.	INSTRUCTIONS h.	SCHEDULES i.	STATEMENTS j.	REPORTS k.	CERTIFICATES l.	SAMPLES m.	RECORDS n.	O&M MANUALS o.	CLASSIFICATION: INFORMATION ONLY p.	GOVERNMENT APPROVED q.	REVIEWER r.	CONTRACTOR SCHEDULE DATES: SUBMIT s.	APPROVAL NEEDED BY t.	MATERIAL NEEDED BY u.	CONTRACTOR ACTION: CODE v.	DATE w.	SUBMIT TO GOVERN-MENT x.	GOVERNMENT ACTION: CODE y.	DATE z.	REMARKS aa.
			1.4	Proportions of Mix					X							X										
			3.3	Sampling and Testing						X					X											
			2.2	Cementitious Materials							X				X											

SUBMITTAL REGISTER
(ER 415 1-10)

CONTRACT NO.

TITLE AND LOCATION
MILVAN Support Facility, Tooele AD

CONTRACTOR

SPECIFICATION SECTION
05500

ACTIVITY NO. a.	TRANS-MITTAL NO. b.	ITEM NO c.	SPECIFICATION PARAGRAPH NUMBER d.	DESCRIPTION OF ITEM SUBMITTED e.	TYPE OF SUBMITTAL: DATA f.	DRAWINGS g.	INSTRUCTIONS h.	SCHEDULES i.	STATEMENTS j.	REPORTS k.	CERTIFICATES l.	SAMPLES m.	RECORDS n.	O&M MANUALS o.	CLASSIFICATION: INFORMATION ONLY p.	GOVERNMENT APPROVED q.	REVIEWER r.	CONTRACTOR SCHEDULE DATES: SUBMIT s.	APPROVAL NEEDED BY t.	MATERIAL NEEDED BY u.	CONTRACTOR ACTION: CODE v.	DATE w.	SUBMIT TO GOVERN-MENT x.	GOVERNMENT ACTION: CODE y.	DATE z.	REMARKS aa.
			1.2	Miscellaneous Metal Items		X									X											

SUBMITTAL REGISTER
(ER 415 1-10)

CONTRACT NO.

TITLE AND LOCATION
MILVAN Support Facility, Tooele AD

CONTRACTOR

SPECIFICATION SECTION
06200

ACTIVITY NO. a.	TRANS-MITTAL NO. b.	ITEM NO c.	SPECIFICATION PARAGRAPH NUMBER d.	DESCRIPTION OF ITEM SUBMITTED e.	TYPE OF SUBMITTAL: DATA f.	DRAWINGS g.	INSTRUCTIONS h.	SCHEDULES i.	STATEMENTS j.	REPORTS k.	CERTIFICATES l.	SAMPLES m.	RECORDS n.	O&M MANUALS o.	CLASSIFICATION: INFORMATION ONLY p.	GOVERNMENT APPROVED q.	REVIEWER r.	CONTRACTOR SCHEDULE DATES: SUBMIT s.	APPROVAL NEEDED BY t.	MATERIAL NEEDED BY u.	CONTRACTOR ACTION: CODE v.	DATE w.	SUBMIT TO GOVERN-MENT x.	GOVERNMENT ACTION: CODE y.	DATE z.	REMARKS aa.
			1.2	Finish Carpentry		X									X											
			1.2	Kerfed Sills								X			X											

SUBMITTAL REGISTER
(ER 415 1-10)

CONTRACT NO.

TITLE AND LOCATION
MILVAN Support Facility, Tooele AD

CONTRACTOR

SPECIFICATION SECTION
07270

ACTIVITY NO. a.	TRANS-MITTAL NO. b.	ITEM NO c.	SPECIFICATION PARAGRAPH NUMBER d.	DESCRIPTION OF ITEM SUBMITTED e.	TYPE OF SUBMITTAL: DATA f.	DRAWINGS g.	INSTRUCTIONS h.	SCHEDULES i.	STATEMENTS j.	REPORTS k.	CERTIFICATES l.	SAMPLES m.	RECORDS n.	O&M MANUALS o.	CLASSIFICATION: INFORMATION ONLY p.	GOVERNMENT APPROVED q.	REVIEWER r.	CONTRACTOR SCHEDULE DATES: SUBMIT s.	APPROVAL NEEDED BY t.	MATERIAL NEEDED BY u.	CONTRACTOR ACTION: CODE v.	DATE w.	SUBMIT TO GOVERN-MENT x.	GOVERNMENT ACTION: CODE y.	DATE z.	REMARKS aa.
			2.1	Firestopping Materials		X									X											
			2.1	Firestopping Materials							X				X											
			1.5	Installer Qualifications							X				X											
			3.3	Inspection							X				X											

SUBMITTAL REGISTER
(ER 415 1-10)

CONTRACT NO.

TITLE AND LOCATION
MILVAN Support Facility, Tooele AD

CONTRACTOR

SPECIFICATION SECTION
07416

ACTIVITY NO. a.	TRANS-MITTAL NO. b.	ITEM NO. c.	SPECIFICATION PARAGRAPH NUMBER d.	DESCRIPTION OF ITEM SUBMITTED e.	TYPE OF SUBMITTAL: DATA f.	DRAWINGS g.	INSTRUCTIONS h.	SCHEDULES i.	STATEMENTS j.	REPORTS k.	CERTIFICATES l.	SAMPLES m.	RECORDS n.	O&M MANUALS o.	CLASSIFICATION: INFORMATION ONLY p.	GOVERNMENT APPROVED q.	REVIEWER r.	CONTRACTOR SCHEDULE DATES: SUBMIT s.	APPROVAL NEEDED BY t.	MATERIAL NEEDED BY u.	CONTRACTOR ACTION: CODE v.	DATE w.	SUBMIT TO GOVERN-MENT x.	GOVERNMENT ACTION: CODE y.	DATE z.	REMARKS aa.
			1.5	Design Analysis	X										X											
			1.5	Structural Standing Seam Metal Roof		X									X											
				System																						
			1.5	Qualifications					X						X											
			1.5	Test Report for Uplift Resistance of						X					X											
				the SSSMR																						
			1.5	Structural Standing Seam Metal Roof							X				X											
				System																						
			2.3	Accessories								X			X											
			2.1	Roof Panels								X			X											
			2.6	Factory Color Finish								X			X											
			2.4	Fasteners								X			X											
			2.8	Gaskets and Insulating Compounds								X			X											
			2.7	Sealant								X			X											
			2.2	Concealed Anchor Clips								X			X											
			2.5	Subpurlins								X			X											
			2.9	EPDM Rubber Boots								X			X											

SUBMITTAL REGISTER
(ER 415 1-10)

CONTRACT NO.

TITLE AND LOCATION
MILVAN Support Facility, Tooele AD

CONTRACTOR

SPECIFICATION SECTION
07600

ACTIVITY NO. a.	TRANS-MITTAL NO. b.	ITEM NO c.	SPECIFICATION PARAGRAPH NUMBER d.	DESCRIPTION OF ITEM SUBMITTED e.	TYPE OF SUBMITTAL: DATA f.	DRAWINGS g.	INSTRUCTIONS h.	SCHEDULES i.	STATEMENTS j.	REPORTS k.	CERTIFICATES l.	SAMPLES m.	RECORDS n.	O&M MANUALS o.	CLASSIFICATION: INFORMATION ONLY p.	GOVERNMENT APPROVED q.	REVIEWER r.	CONTRACTOR SCHEDULE DATES: SUBMIT s.	APPROVAL NEEDED BY t.	MATERIAL NEEDED BY u.	CONTRACTOR ACTION: CODE v.	DATE w.	SUBMIT TO GOVERN-MENT x.	GOVERNMENT ACTION: CODE y.	DATE z.	REMARKS aa.
			2.1	Materials		X									X											

SUBMITTAL REGISTER
(ER 415 1-10)

CONTRACT NO.

TITLE AND LOCATION
MILVAN Support Facility, Tooele AD

CONTRACTOR

SPECIFICATION SECTION
07900

ACTIVITY NO. a.	TRANS-MITTAL NO. b.	ITEM NO c.	SPECIFICATION PARAGRAPH NUMBER d.	DESCRIPTION OF ITEM SUBMITTED e.	TYPE OF SUBMITTAL: DATA f.	DRAWINGS g.	INSTRUCTIONS h.	SCHEDULES i.	STATEMENTS j.	REPORTS k.	CERTIFICATES l.	SAMPLES m.	RECORDS n.	O&M MANUALS o.	CLASSIFICATION: INFORMATION ONLY p.	GOVERNMENT APPROVED q.	REVIEWER r.	CONTRACTOR SCHEDULE DATES: SUBMIT s.	APPROVAL NEEDED BY t.	MATERIAL NEEDED BY u.	CONTRACTOR ACTION: CODE v.	DATE w.	SUBMIT TO GOVERN-MENT x.	GOVERNMENT ACTION: CODE y.	DATE z.	REMARKS aa.
			2.1	Backing	X										X											
			2.2	Bond-Breaker	X										X											
			2.4	Sealant	X										X											
			2.4	Sealant							X				X											

SUBMITTAL REGISTER
(ER 415 1-10)

CONTRACT NO.

TITLE AND LOCATION
MILVAN Support Facility, Tooele AD

CONTRACTOR

SPECIFICATION SECTION
08110

ACTIVITY NO. a.	TRANS-MITTAL NO. b.	ITEM NO c.	SPECIFICATION PARAGRAPH NUMBER d.	DESCRIPTION OF ITEM SUBMITTED e.	TYPE OF SUBMITTAL: DATA f.	DRAWINGS g.	INSTRUCTIONS h.	SCHEDULES i.	STATEMENTS j.	REPORTS k.	CERTIFICATES l.	SAMPLES m.	RECORDS n.	O&M MANUALS o.	CLASSIFICATION: INFORMATION ONLY p.	GOVERNMENT APPROVED q.	REVIEWER r.	CONTRACTOR SCHEDULE DATES: SUBMIT s.	APPROVAL NEEDED BY t.	MATERIAL NEEDED BY u.	CONTRACTOR ACTION: CODE v.	DATE w.	SUBMIT TO GOVERN-MENT x.	GOVERNMENT ACTION: CODE y.	DATE z.	REMARKS aa.
			1.2	Steel Doors and Frames		X									X											
			2.2	Fire Rated Doors						X					X											
			2.2	Fire Rated Doors							X				X											
			2.3	Thermal Insulated Doors							X															
			1.2	Steel Doors and Frames								X			X											

SUBMITTAL REGISTER
(ER 415 1-10)

CONTRACT NO.

TITLE AND LOCATION
MILVAN Support Facility, Tooele AD

CONTRACTOR

SPECIFICATION SECTION
08330

ACTIVITY NO. a.	TRANS-MITTAL NO. b.	ITEM NO. c.	SPECIFICATION PARAGRAPH NUMBER d.	DESCRIPTION OF ITEM SUBMITTED e.	TYPE OF SUBMITTAL: DATA f.	DRAWINGS g.	INSTRUCTIONS h.	SCHEDULES i.	STATEMENTS j.	REPORTS k.	CERTIFICATES l.	SAMPLES m.	RECORDS n.	O&M MANUALS o.	CLASSIFICATION: INFORMATION ONLY p.	GOVERNMENT APPROVED q.	REVIEWER r.	CONTRACTOR SCHEDULE DATES: SUBMIT s.	APPROVAL NEEDED BY t.	MATERIAL NEEDED BY u.	CONTRACTOR ACTION: CODE v.	DATE w.	SUBMIT TO GOVERN-MENT x.	GOVERNMENT ACTION: CODE y.	DATE z.	REMARKS aa.
			1.3	Overhead Rolling Door Unit	X										X											
			1.3	Overhead Rolling Door Unit		X									X											
			1.3	Overhead Rolling Door Unit			X								X		FIO									
			1.3	Fire Doors							X				X											
			1.3	Overhead Rolling Door Unit								X			X											
			1.3	Operation Manual										X	X											
			1.3	Maintenance and Repair Manual										X	X											

SUBMITTAL REGISTER
(ER 415 1-10)

CONTRACT NO.

TITLE AND LOCATION
MILVAN Support Facility, Tooele AD

CONTRACTOR

SPECIFICATION SECTION
08520

ACTIVITY NO. a.	TRANS-MITTAL NO. b.	ITEM NO c.	SPECIFICATION PARAGRAPH NUMBER d.	DESCRIPTION OF ITEM SUBMITTED e.	TYPE OF SUBMITTAL: DATA f.	DRAWINGS g.	INSTRUCTIONS h.	SCHEDULES i.	STATEMENTS j.	REPORTS k.	CERTIFICATES l.	SAMPLES m.	RECORDS n.	O&M MANUALS o.	CLASSIFICATION: INFORMATION ONLY p.	GOVERNMENT APPROVED q.	REVIEWER r.	CONTRACTOR SCHEDULE DATES: SUBMIT s.	APPROVAL NEEDED BY t.	MATERIAL NEEDED BY u.	CONTRACTOR ACTION: CODE v.	DATE w.	SUBMIT TO GOVERN-MENT x.	GOVERNMENT ACTION: CODE y.	DATE z.	REMARKS aa.
			1.3	Aluminum Windows	X										X											
			1.3	Aluminum Windows		X									X											
			2.3	Insect Screens		X									X											
			1.3	Aluminum Windows			X								X											
			1.3	Aluminum Windows						X					X											
			1.3	Aluminum Windows							X				X											
			1.3	Aluminum Windows								X			X											

SUBMITTAL REGISTER
(ER 415 1-10)

CONTRACT NO.

TITLE AND LOCATION
MILVAN Support Facility, Tooele AD

CONTRACTOR

SPECIFICATION SECTION
08700

ACTIVITY NO. a.	TRANS-MITTAL NO. b.	ITEM NO c.	SPECIFICATION PARAGRAPH NUMBER d.	DESCRIPTION OF ITEM SUBMITTED e.	TYPE OF SUBMITTAL: DATA f.	DRAWINGS g.	INSTRUCTIONS h.	SCHEDULES i.	STATEMENTS j.	REPORTS k.	CERTIFICATES l.	SAMPLES m.	RECORDS n.	O&M MANUALS o.	CLASSIFICATION: INFORMATION ONLY p.	GOVERNMENT APPROVED q.	REVIEWER r.	CONTRACTOR SCHEDULE DATES: SUBMIT s.	APPROVAL NEEDED BY t.	MATERIAL NEEDED BY u.	CONTRACTOR ACTION: CODE v.	DATE w.	SUBMIT TO GOVERN-MENT x.	GOVERNMENT ACTION: CODE y.	DATE z.	REMARKS aa.
			1.2	Hardware and Accessories	X											X										
			1.2	Hardware Schedule				X							X											
			1.2	Keying Schedule				X								X										
			1.2	Hardware and Accessories							X				X											

SUBMITTAL REGISTER
(ER 415 1-10)

CONTRACT NO.

TITLE AND LOCATION
MILVAN Support Facility, Tooele AD

CONTRACTOR

SPECIFICATION SECTION
08810

ACTIVITY NO. a.	TRANS-MITTAL NO. b.	ITEM NO c.	SPECIFICATION PARAGRAPH NUMBER d.	DESCRIPTION OF ITEM SUBMITTED e.	TYPE OF SUBMITTAL: DATA f.	DRAWINGS g.	INSTRUCTIONS h.	SCHEDULES i.	STATEMENTS j.	REPORTS k.	CERTIFICATES l.	SAMPLES m.	RECORDS n.	O&M MANUALS o.	CLASSIFICATION: INFORMATION ONLY p.	GOVERNMENT APPROVED q.	REVIEWER r.	CONTRACTOR SCHEDULE DATES: SUBMIT s.	APPROVAL NEEDED BY t.	MATERIAL NEEDED BY u.	CONTRACTOR ACTION: CODE v.	DATE w.	SUBMIT TO GOVERN-MENT x.	GOVERNMENT ACTION: CODE y.	DATE z.	REMARKS aa.
			1.2	Glass	X										X											
			1.2	Glazing Accessories	X										X											
			1.2	Glazing Materials and Accessories		X									X											
			1.2	Glass							X				X											
			1.2	Glass								X			X											

SUBMITTAL REGISTER
(ER 415 1-10)

CONTRACT NO.

TITLE AND LOCATION
MILVAN Support Facility, Tooele AD

CONTRACTOR

SPECIFICATION SECTION
09250

ACTIVITY NO. a.	TRANS-MITTAL NO. b.	ITEM NO c.	SPECIFICATION PARAGRAPH NUMBER d.	DESCRIPTION OF ITEM SUBMITTED e.	TYPE OF SUBMITTAL: DATA f.	DRAWINGS g.	INSTRUCTIONS h.	SCHEDULES i.	STATEMENTS j.	REPORTS k.	CERTIFICATES l.	SAMPLES m.	RECORDS n.	O&M MANUALS o.	CLASSIFICATION: INFORMATION ONLY p.	GOVERNMENT APPROVED q.	REVIEWER r.	CONTRACTOR SCHEDULE DATES: SUBMIT s.	APPROVAL NEEDED BY t.	MATERIAL NEEDED BY u.	CONTRACTOR ACTION: CODE v.	DATE w.	SUBMIT TO GOVERN-MENT x.	GOVERNMENT ACTION: CODE y.	DATE z.	REMARKS aa.
			1.2	Steel Framing		X									X											
			1.2	Control Joints		X									X											
			1.2	Gypsum Wallboard							X				X											
			1.2	Steel Framing							X				X											

SUBMITTAL REGISTER
(ER 415 1-10)

CONTRACT NO.

TITLE AND LOCATION
MILVAN Support Facility, Tooele AD

CONTRACTOR

SPECIFICATION SECTION
09310

ACTIVITY NO. a.	TRANS-MITTAL NO. b.	ITEM NO. c.	SPECIFICATION PARAGRAPH NUMBER d.	DESCRIPTION OF ITEM SUBMITTED e.	TYPE OF SUBMITTAL: DATA f.	DRAWINGS g.	INSTRUCTIONS h.	SCHEDULES i.	STATEMENTS j.	REPORTS k.	CERTIFICATES l.	SAMPLES m.	RECORDS n.	O&M MANUALS o.	CLASSIFICATION: INFORMATION ONLY p.	GOVERNMENT APPROVED q.	REVIEWER r.	CONTRACTOR SCHEDULE DATES: SUBMIT s.	APPROVAL NEEDED BY t.	MATERIAL NEEDED BY u.	CONTRACTOR ACTION: CODE v.	DATE w.	SUBMIT TO GOVERN-MENT x.	GOVERNMENT ACTION: CODE y.	DATE z.	REMARKS aa.
			2.1	Tile	X										X											
			2.2	Setting-Bed	X										X											
			2.4	Mortar, Grout, and Adhesive	X										X											
			2.1	Tile			X								X											
			1.2	Mortar and Grout			X								X											
			2.1	Tile						X					X											
			2.4	Mortar, Grout, and Adhesive						X					X											
			2.1	Tile								X				X										

SUBMITTAL REGISTER
(ER 415 1-10)

CONTRACT NO.

TITLE AND LOCATION
MILVAN Support Facility, Tooele AD

CONTRACTOR

SPECIFICATION SECTION
09510

ACTIVITY NO. a.	TRANS-MITTAL NO. b.	ITEM NO c.	SPECIFICATION PARAGRAPH NUMBER d.	DESCRIPTION OF ITEM SUBMITTED e.	TYPE OF SUBMITTAL: DATA f.	DRAWINGS g.	INSTRUCTIONS h.	SCHEDULES i.	STATEMENTS j.	REPORTS k.	CERTIFICATES l.	SAMPLES m.	RECORDS n.	O&M MANUALS o.	CLASSIFICATION: INFORMATION ONLY p.	GOVERNMENT APPROVED q.	REVIEWER r.	CONTRACTOR SCHEDULE DATES: SUBMIT s.	APPROVAL NEEDED BY t.	MATERIAL NEEDED BY u.	CONTRACTOR ACTION: CODE v.	DATE w.	SUBMIT TO GOVERN-MENT x.	GOVERNMENT ACTION: CODE y.	DATE z.	REMARKS aa.
			1.3	Acoustical Ceiling System	X										X											
			1.3	Acoustical Ceiling System		X									X											
			2.7	Ceiling Attenuation Class and Test						X					X											
			2.1	Acoustical Units							X				X											
			2.1	Acoustical Units								X				X										

SUBMITTAL REGISTER
(ER 415 1-10)

CONTRACT NO.

TITLE AND LOCATION
MILVAN Support Facility, Tooele AD

CONTRACTOR

SPECIFICATION SECTION
09650

ACTIVITY NO. a.	TRANS-MITTAL NO. b.	ITEM NO c.	SPECIFICATION PARAGRAPH NUMBER d.	DESCRIPTION OF ITEM SUBMITTED e.	TYPE OF SUBMITTAL: DATA f.	DRAWINGS g.	INSTRUCTIONS h.	SCHEDULES i.	STATEMENTS j.	REPORTS k.	CERTIFICATES l.	SAMPLES m.	RECORDS n.	O&M MANUALS o.	CLASSIFICATION: INFORMATION ONLY p.	GOVERNMENT APPROVED q.	REVIEWER r.	CONTRACTOR SCHEDULE DATES: SUBMIT s.	APPROVAL NEEDED BY t.	MATERIAL NEEDED BY u.	CONTRACTOR ACTION: CODE v.	DATE w.	SUBMIT TO GOVERN-MENT x.	GOVERNMENT ACTION: CODE y.	DATE z.	REMARKS aa.
			1.2	Resilient Flooring and Accessories	X										X											
			1.2	Resilient Flooring and Accessories						X					X											
			1.2	Resilient Flooring and Accessories								X				X										

SUBMITTAL REGISTER
(ER 415 1-10)

CONTRACT NO.

TITLE AND LOCATION
MILVAN Support Facility, Tooele AD

CONTRACTOR

SPECIFICATION SECTION
09900

ACTIVITY NO. a.	TRANS-MITTAL NO. b.	ITEM NO. c.	SPECIFICATION PARAGRAPH NUMBER d.	DESCRIPTION OF ITEM SUBMITTED e.	TYPE OF SUBMITTAL: DATA f.	DRAWINGS g.	INSTRUCTIONS h.	SCHEDULES i.	STATEMENTS j.	REPORTS k.	CERTIFICATES l.	SAMPLES m.	RECORDS n.	O&M MANUALS o.	CLASSIFICATION: INFORMATION ONLY p.	GOVERNMENT APPROVED q.	REVIEWER r.	CONTRACTOR SCHEDULE DATES: SUBMIT s.	APPROVAL NEEDED BY t.	MATERIAL NEEDED BY u.	CONTRACTOR ACTION: CODE v.	DATE w.	SUBMIT TO GOVERN-MENT x.	GOVERNMENT ACTION: CODE y.	DATE z.	REMARKS aa.
			2.1	Paint	X											X										
			3.3	Mixing and Thinning			X								X											
			3.3.2	Application			X									X										
			2.1	Paint						X					X											
			2.1.2	Mildewcide and Insecticide							X				X											
			2.1.5	Volatile Organic Compound (VOC)							X															
				Content																						
			1.2	FIO							X															
			2.1	Paint								X			X											

SUBMITTAL REGISTER
(ER 415 1-10)

CONTRACT NO.

TITLE AND LOCATION
MILVAN Support Facility, Tooele AD

CONTRACTOR

SPECIFICATION SECTION
10800

ACTIVITY NO. a.	TRANS-MITTAL NO. b.	ITEM NO c.	SPECIFICATION PARAGRAPH NUMBER d.	DESCRIPTION OF ITEM SUBMITTED e.	TYPE OF SUBMITTAL: DATA f.	DRAWINGS g.	INSTRUCTIONS h.	SCHEDULES i.	STATEMENTS j.	REPORTS k.	CERTIFICATES l.	SAMPLES m.	RECORDS n.	O&M MANUALS o.	CLASSIFICATION: INFORMATION ONLY p.	GOVERNMENT APPROVED q.	REVIEWER r.	CONTRACTOR SCHEDULE DATES: SUBMIT s.	APPROVAL NEEDED BY t.	MATERIAL NEEDED BY u.	CONTRACTOR ACTION: CODE v.	DATE w.	SUBMIT TO GOVERN-MENT x.	GOVERNMENT ACTION: CODE y.	DATE z.	REMARKS aa.
			2.1.2	Finishes	X										X											
			2.2	Accessory Items	X										X											
			2.1.2	Finishes								X			X											
			2.2	Accessory Items								X			X											

SUBMITTAL REGISTER
(ER 415 1-10)

CONTRACT NO.

TITLE AND LOCATION
MILVAN Support Facility, Tooele AD

CONTRACTOR

SPECIFICATION SECTION
13080

ACTIVITY NO. a.	TRANS-MITTAL NO. b.	ITEM NO c.	SPECIFICATION PARAGRAPH NUMBER d.	DESCRIPTION OF ITEM SUBMITTED e.	TYPE OF SUBMITTAL: DATA f.	DRAWINGS g.	INSTRUCTIONS h.	SCHEDULES i.	STATEMENTS j.	REPORTS k.	CERTIFICATES l.	SAMPLES m.	RECORDS n.	O&M MANUALS o.	CLASSIFICATION: INFORMATION ONLY p.	GOVERNMENT APPROVED q.	REVIEWER r.	CONTRACTOR SCHEDULE DATES: SUBMIT s.	APPROVAL NEEDED BY t.	MATERIAL NEEDED BY u.	CONTRACTOR ACTION: CODE v.	DATE w.	SUBMIT TO GOVERN-MENT x.	GOVERNMENT ACTION: CODE y.	DATE z.	REMARKS aa.
			3.1	Bracing and Coupling	X										X											
			3.12	Lighting Fixtures in Buildings	X										X											
			3.11	Miscellaneous Equipment	X										X											
			3.1	Bracing and Coupling		X									X											
			3.3	Flexible Couplings or Joints		X																				
			1.3	FIO_.		X																				
			3.7	Resilient Vibration Isolation Devices		X									X											
			3.12	Lighting Fixtures in Buildings		X									X											
			3.11	Miscellaneous Equipment		X									X											
			2.1.3.1	Flexible Ball Joints							X				X											

SUBMITTAL REGISTER
(ER 415 1-10)

CONTRACT NO.

TITLE AND LOCATION
MILVAN Support Facility, Tooele AD

CONTRACTOR

SPECIFICATION SECTION
13120

ACTIVITY NO. a.	TRANS-MITTAL NO. b.	ITEM NO c.	SPECIFICATION PARAGRAPH NUMBER d.	DESCRIPTION OF ITEM SUBMITTED e.	TYPE OF SUBMITTAL: DATA f.	DRAWINGS g.	INSTRUCTIONS h.	SCHEDULES i.	STATEMENTS j.	REPORTS k.	CERTIFICATES l.	SAMPLES m.	RECORDS n.	O&M MANUALS o.	CLASSIFICATION: INFORMATION ONLY p.	GOVERNMENT APPROVED q.	REVIEWER r.	CONTRACTOR SCHEDULE DATES: SUBMIT s.	APPROVAL NEEDED BY t.	MATERIAL NEEDED BY u.	CONTRACTOR ACTION: CODE v.	DATE w.	SUBMIT TO GOVERN-MENT x.	GOVERNMENT ACTION: CODE y.	DATE z.	REMARKS aa.
			1.4	Design Analysis	X										X											
			1.4	Metal Building Systems		X									X											
			1.4	Qualifications					X						X											
			1.4	Metal Building Systems							X					X										
			2.3.6	Accessories								X			X											
			2.3	Roof and Wall Covering								X			X											
			2.4	Fasteners								X			X											
			2.11	Gaskets and Insulating Compounds								X			X											
			2.10	Sealant								X			X											
			1.4	Wall Liners								X			X											

SUBMITTAL REGISTER
(ER 415 1-10)

CONTRACT NO.

TITLE AND LOCATION
MILVAN Support Facility, Tooele AD

CONTRACTOR

SPECIFICATION SECTION
15250

ACTIVITY NO. a.	TRANS-MITTAL NO. b.	ITEM NO c.	SPECIFICATION PARAGRAPH NUMBER d.	DESCRIPTION OF ITEM SUBMITTED e.	TYPE OF SUBMITTAL: DATA f.	DRAWINGS g.	INSTRUCTIONS h.	SCHEDULES i.	STATEMENTS j.	REPORTS k.	CERTIFICATES l.	SAMPLES m.	RECORDS n.	O&M MANUALS o.	CLASSIFICATION: INFORMATION ONLY p.	GOVERNMENT APPROVED q.	REVIEWER r.	CONTRACTOR SCHEDULE DATES: SUBMIT s.	APPROVAL NEEDED BY t.	MATERIAL NEEDED BY u.	CONTRACTOR ACTION: CODE v.	DATE w.	SUBMIT TO GOVERN-MENT x.	GOVERNMENT ACTION: CODE y.	DATE z.	REMARKS aa.
			1.4	Thermal Insulation Materials								X														

SUBMITTAL REGISTER
(ER 415 1-10)

CONTRACT NO.

TITLE AND LOCATION
MILVAN Support Facility, Tooele AD

CONTRACTOR

SPECIFICATION SECTION
15400

ACTIVITY NO. a.	TRANS-MITTAL NO. b.	ITEM NO c.	SPECIFICATION PARAGRAPH NUMBER d.	DESCRIPTION OF ITEM SUBMITTED e.	TYPE OF SUBMITTAL: DATA f.	DRAWINGS g.	INSTRUCTIONS h.	SCHEDULES i.	STATEMENTS j.	REPORTS k.	CERTIFICATES l.	SAMPLES m.	RECORDS n.	O&M MANUALS o.	CLASSIFICATION: INFORMATION ONLY p.	GOVERNMENT APPROVED q.	REVIEWER r.	CONTRACTOR SCHEDULE DATES: SUBMIT s.	APPROVAL NEEDED BY t.	MATERIAL NEEDED BY u.	CONTRACTOR ACTION: CODE v.	DATE w.	SUBMIT TO GOVERN-MENT x.	GOVERNMENT ACTION: CODE y.	DATE z.	REMARKS aa.
			1.5	Welding	X										X											
			3.4	Vibration-Absorbing Features	X										X											
			1.5	Plumbing System		X									X											
			1.5	Electrical Schematics		X									X											
			1.5	Plumbing System			X								X											
			3.7	Tests, Flushing and Sterilization						X					X											
			1.5	Materials and Equipment							X				X											
			1.5	Bolts							X				X											
			1.5	Plumbing System										X	X											

SUBMITTAL REGISTER
(ER 415 1-10)

CONTRACT NO.

TITLE AND LOCATION
MILVAN Support Facility, Tooele AD

CONTRACTOR

SPECIFICATION SECTION
15488

ACTIVITY NO. a.	TRANS-MITTAL NO. b.	ITEM NO c.	SPECIFICATION PARAGRAPH NUMBER d.	DESCRIPTION OF ITEM SUBMITTED e.	TYPE OF SUBMITTAL: DATA f.	DRAWINGS g.	INSTRUCTIONS h.	SCHEDULES i.	STATEMENTS j.	REPORTS k.	CERTIFICATES l.	SAMPLES m.	RECORDS n.	O&M MANUALS o.	CLASSIFICATION: INFORMATION ONLY p.	GOVERNMENT APPROVED q.	REVIEWER r.	CONTRACTOR SCHEDULE DATES: SUBMIT s.	APPROVAL NEEDED BY t.	MATERIAL NEEDED BY u.	CONTRACTOR ACTION: CODE v.	DATE w.	SUBMIT TO GOVERN-MENT x.	GOVERNMENT ACTION: CODE y.	DATE z.	REMARKS aa.
			1.3	Gas Piping System		X									X											

SUBMITTAL REGISTER
(ER 415 1-10)

CONTRACT NO.

TITLE AND LOCATION
MILVAN Support Facility, Tooele AD

CONTRACTOR

SPECIFICATION SECTION
15565

ACTIVITY NO. a.	TRANS-MITTAL NO. b.	ITEM NO c.	SPECIFICATION PARAGRAPH NUMBER d.	DESCRIPTION OF ITEM SUBMITTED e.	TYPE OF SUBMITTAL: DATA f.	DRAWINGS g.	INSTRUCTIONS h.	SCHEDULES i.	STATEMENTS j.	REPORTS k.	CERTIFICATES l.	SAMPLES m.	RECORDS n.	O&M MANUALS o.	CLASSIFICATION: INFORMATION ONLY p.	GOVERNMENT APPROVED q.	REVIEWER r.	CONTRACTOR SCHEDULE DATES: SUBMIT s.	APPROVAL NEEDED BY t.	MATERIAL NEEDED BY u.	CONTRACTOR ACTION: CODE v.	DATE w.	SUBMIT TO GOVERN-MENT x.	GOVERNMENT ACTION: CODE y.	DATE z.	REMARKS aa.
			1.2	Heating System	X										X											
			1.2	Heating System		X									X											
			1.2	Heating System			X								X											
			3.2	Testing, Adjusting, and Balancing						X					X											

SUBMITTAL REGISTER
(ER 415 1-10)

CONTRACT NO.

TITLE AND LOCATION
MILVAN Support Facility, Tooele AD

CONTRACTOR

SPECIFICATION SECTION
15566

ACTIVITY NO. a.	TRANS-MITTAL NO. b.	ITEM NO c.	SPECIFICATION PARAGRAPH NUMBER d.	DESCRIPTION OF ITEM SUBMITTED e.	TYPE OF SUBMITTAL: DATA f.	DRAWINGS g.	INSTRUCTIONS h.	SCHEDULES i.	STATEMENTS j.	REPORTS k.	CERTIFICATES l.	SAMPLES m.	RECORDS n.	O&M MANUALS o.	CLASSIFICATION: INFORMATION ONLY p.	GOVERNMENT APPROVED q.	REVIEWER r.	CONTRACTOR SCHEDULE DATES: SUBMIT s.	APPROVAL NEEDED BY t.	MATERIAL NEEDED BY u.	CONTRACTOR ACTION: CODE v.	DATE w.	SUBMIT TO GOVERN-MENT x.	GOVERNMENT ACTION: CODE y.	DATE z.	REMARKS aa.
			1.2.4	Heating Equipment	X										X											
			1.2.4	Heating Equipment		X									X											
			3.4	Tests			X								X											
			1.2.4	System Diagrams			X								X											
			3.4	Tests				X							X											
			1.2.4	Field Training				X							X											
			1.2.4	Similar Services					X						X											
			3.4	Tests						X					X											
			1.2.4	Heating Equipment										X	X											

SUBMITTAL REGISTER
(ER 415 1-10)

CONTRACT NO.

TITLE AND LOCATION
MILVAN Support Facility, Tooele AD

CONTRACTOR

SPECIFICATION SECTION
15653

ACTIVITY NO. a.	TRANS-MITTAL NO. b.	ITEM NO c.	SPECIFICATION PARAGRAPH NUMBER d.	DESCRIPTION OF ITEM SUBMITTED e.	TYPE OF SUBMITTAL: DATA f.	DRAWINGS g.	INSTRUCTIONS h.	SCHEDULES i.	STATEMENTS j.	REPORTS k.	CERTIFICATES l.	SAMPLES m.	RECORDS n.	O&M MANUALS o.	CLASSIFICATION: INFORMATION ONLY p.	GOVERNMENT APPROVED q.	REVIEWER r.	CONTRACTOR SCHEDULE DATES: SUBMIT s.	APPROVAL NEEDED BY t.	MATERIAL NEEDED BY u.	CONTRACTOR ACTION: CODE v.	DATE w.	SUBMIT TO GOVERN-MENT x.	GOVERNMENT ACTION: CODE y.	DATE z.	REMARKS aa.
			1.2	Air-Conditioning System	X																					
			1.2	FIO___	X																					
			1.2	Spare Parts Data	X																					
			1.2	FIO_____	X																					
			1.2	Air-Conditioning System		X									X											
			3.1.12	Framed Instructions			X								X											
			3.2	Tests				X							X											
			3.4	Demonstrations				X							X											
			1.3	Qualifications					X						X											
			1.5.1	Verification of Dimensions					X						X											
			3.2	Tests						X					X											
			1.2	System Performance Tests						X					X											
			1.2	Air-Conditioning System							X															
			1.2	FIO_____							X															
			1.2	Service Organizations							X															
			1.2	Operation Manual										X												
			1.2	FIO_____										X												
			1.2	Maintenance Manual										X												

SUBMITTAL REGISTER
(ER 415 1-10)

CONTRACT NO.

TITLE AND LOCATION
MILVAN Support Facility, Tooele AD

CONTRACTOR

SPECIFICATION SECTION
15895

ACTIVITY NO. a.	TRANS-MITTAL NO. b.	ITEM NO c.	SPECIFICATION PARAGRAPH NUMBER d.	DESCRIPTION OF ITEM SUBMITTED e.	TYPE OF SUBMITTAL: DATA f.	DRAWINGS g.	INSTRUCTIONS h.	SCHEDULES i.	STATEMENTS j.	REPORTS k.	CERTIFICATES l.	SAMPLES m.	RECORDS n.	O&M MANUALS o.	CLASSIFICATION: INFORMATION ONLY p.	GOVERNMENT APPROVED q.	REVIEWER r.	CONTRACTOR SCHEDULE DATES: SUBMIT s.	APPROVAL NEEDED BY t.	MATERIAL NEEDED BY u.	CONTRACTOR ACTION: CODE v.	DATE w.	SUBMIT TO GOVERN-MENT x.	GOVERNMENT ACTION: CODE y.	DATE z.	REMARKS aa.
			1.4	Components and Equipment Data	X																					
			1.4	[_____]	X																					
			1.4	Air Supply, Distribution, Ventilation,		X																				
				and Exhaust Equipment																						
			1.4	[_____]		X																				
			1.4	Test Procedures			X																			
			1.4	[_____]			X																			
			1.4	Welding Procedures			X																			
			1.4	System Diagrams			X									X										
			1.4	Test Schedules				X																		
			1.4	[_____]				X																		
			1.4	Field Training Schedule				X																		
			1.4	Similar Services					X																	
			1.4	[_____]					X																	
			1.4	Welding Qualification					X																	
			1.4	Test Reports						X																
			1.4	[_____]						X																
			1.4	Bolts							X															
			1.4	[_____]							X															
			1.4	Air Supply, Distribution, Ventilation,										X												
				and Exhaust Manuals																						
			1.4	[_____]										X												

SUBMITTAL REGISTER
(ER 415 1-10)

CONTRACT NO.

TITLE AND LOCATION
MILVAN Support Facility, Tooele AD

CONTRACTOR

SPECIFICATION SECTION
15950

ACTIVITY NO. a.	TRANS-MITTAL NO. b.	ITEM NO. c.	SPECIFICATION PARAGRAPH NUMBER d.	DESCRIPTION OF ITEM SUBMITTED e.	TYPE OF SUBMITTAL: DATA f.	DRAWINGS g.	INSTRUCTIONS h.	SCHEDULES i.	STATEMENTS j.	REPORTS k.	CERTIFICATES l.	SAMPLES m.	RECORDS n.	O&M MANUALS o.	CLASSIFICATION: INFORMATION ONLY p.	GOVERNMENT APPROVED q.	REVIEWER r.	CONTRACTOR SCHEDULE DATES: SUBMIT s.	APPROVAL NEEDED BY t.	MATERIAL NEEDED BY u.	CONTRACTOR ACTION: CODE v.	DATE w.	SUBMIT TO GOVERN-MENT x.	GOVERNMENT ACTION: CODE y.	DATE z.	REMARKS aa.
			1.3	Equipment Compliance Booklet	X																					
			1.3	[_____]	X																					
			1.3	HVAC Control System		X																				
			1.3	[_____]		X																				
			1.3	Commissioning Procedures					X																	
			1.3	[_____]					X																	
			1.3	Performance Verification Test					X																	
				Procedures																						
			1.3	Training Course Materials					X																	
			1.3	Commissioning Report						X																
			1.3	[_____]						X																
			1.3	Performance Verification Test Report						X																
			1.3	ASME Air-Storage Tank Certificate							X															
			1.3	[_____]							X															
			1.3	Service Organizations									X													
			1.3	[_____]									X													
			1.3	Operation Manual										X												
			1.3	[_____]										X												
			1.3	Maintenance and Repair Manual										X												

SUBMITTAL REGISTER
(ER 415 1-10)

CONTRACT NO.

TITLE AND LOCATION
MILVAN Support Facility, Tooele AD

CONTRACTOR

SPECIFICATION SECTION
15990

ACTIVITY NO. a.	TRANS-MITTAL NO. b.	ITEM NO c.	SPECIFICATION PARAGRAPH NUMBER d.	DESCRIPTION OF ITEM SUBMITTED e.	TYPE OF SUBMITTAL: DATA f.	DRAWINGS g.	INSTRUCTIONS h.	SCHEDULES i.	STATEMENTS j.	REPORTS k.	CERTIFICATES l.	SAMPLES m.	RECORDS n.	O&M MANUALS o.	CLASSIFICATION: INFORMATION ONLY p.	GOVERNMENT APPROVED q.	REVIEWER r.	CONTRACTOR SCHEDULE DATES: SUBMIT s.	APPROVAL NEEDED BY t.	MATERIAL NEEDED BY u.	CONTRACTOR ACTION: CODE v.	DATE w.	SUBMIT TO GOVERN-MENT x.	GOVERNMENT ACTION: CODE y.	DATE z.	REMARKS aa.
			1.2	TAB Related HVAC Submittals	X										X											
			1.2	TAB Schematic Drawings and Report		X									X											
				Forms																						
			1.2	TAB Procedures			X								X											
			1.2	Systems Readiness Check				X							X											
			1.2	TAB Execution				X							X											
			1.2	TAB Verification				X							X											
			1.2	TAB Firm					X						X											
			1.2	TAB Specialist					X						X											
			1.2	Instrument Calibration					X						X											
			1.2	Design Review Report						X					X											
			1.2	Systems Readiness Check Report						X					X											
			1.2	TAB Report						X					X											
			1.2	TAB Verification Report						X					X											
			1.2	Ductwork Leak Testing							X				X											

SUBMITTAL REGISTER
(ER 415 1-10)

CONTRACT NO.

TITLE AND LOCATION
MILVAN Support Facility, Tooele AD

CONTRACTOR

SPECIFICATION SECTION
16370

ACTIVITY NO. a.	TRANS-MITTAL NO. b.	ITEM NO c.	SPECIFICATION PARAGRAPH NUMBER d.	DESCRIPTION OF ITEM SUBMITTED e.	TYPE OF SUBMITTAL: DATA f.	DRAWINGS g.	INSTRUCTIONS h.	SCHEDULES i.	STATEMENTS j.	REPORTS k.	CERTIFICATES l.	SAMPLES m.	RECORDS n.	O&M MANUALS o.	CLASSIFICATION: INFORMATION ONLY p.	GOVERNMENT APPROVED q.	REVIEWER r.	CONTRACTOR SCHEDULE DATES: SUBMIT s.	APPROVAL NEEDED BY t.	MATERIAL NEEDED BY u.	CONTRACTOR ACTION: CODE v.	DATE w.	SUBMIT TO GOVERN-MENT x.	GOVERNMENT ACTION: CODE y.	DATE z.	REMARKS aa.
			1.3	Manufacturer's Catalog	X										X											
			1.3	Material, Equipment, and Fixture	X										X											
				Lists																						
			1.3	Installation Procedures	X										X											
			1.3	Electrical Distribution System		X									X											
			1.3	As-Built Drawings		X									X											
			1.3	Factory Test						X					X											
			3.10	Field Testing						X					X											
			1.3	Test Reports						X					X											
			1.3	Materials and Equipment							X				X											
			1.3	Electrical Distribution System										X	X											

SUBMITTAL REGISTER
(ER 415 1-10)

CONTRACT NO.

TITLE AND LOCATION
MILVAN Support Facility, Tooele AD

CONTRACTOR

SPECIFICATION SECTION
16375

ACTIVITY NO. a.	TRANS-MITTAL NO. b.	ITEM NO c.	SPECIFICATION PARAGRAPH NUMBER d.	DESCRIPTION OF ITEM SUBMITTED e.	TYPE OF SUBMITTAL: DATA f.	DRAWINGS g.	INSTRUCTIONS h.	SCHEDULES i.	STATEMENTS j.	REPORTS k.	CERTIFICATES l.	SAMPLES m.	RECORDS n.	O&M MANUALS o.	CLASSIFICATION: INFORMATION ONLY p.	GOVERNMENT APPROVED q.	REVIEWER r.	CONTRACTOR SCHEDULE DATES: SUBMIT s.	APPROVAL NEEDED BY t.	MATERIAL NEEDED BY u.	CONTRACTOR ACTION: CODE v.	DATE w.	SUBMIT TO GOVERN-MENT x.	GOVERNMENT ACTION: CODE y.	DATE z.	REMARKS aa.
			1.3	Manufacturer's Catalog Data	X										X											
			1.3	Material, Equipment, and Fixture	X										X											
				Lists																						
			1.3	Installation Procedures	X										X											
			1.3	Electrical Distribution System		X									X											
			1.3	As-Built Drawings		X									X											
			1.3	Factory Test						X					X											
			1.3	Field Testing						X					X											
			1.3	Test Reports						X					X											
			1.3	Cable Installation Reports						X					X											
			1.3	Materials and Equipment							X				X											
			1.3	Cable Splicer Qualification							X				X											
			1.3	Cable Installer Qualifications							X				X											
			1.3	Electrical Distribution System										X	X											

SUBMITTAL REGISTER
(ER 415 1-10)

CONTRACT NO.

TITLE AND LOCATION
MILVAN Support Facility, Tooele AD

CONTRACTOR

SPECIFICATION SECTION
16415

ACTIVITY NO. a.	TRANS-MITTAL NO. b.	ITEM NO c.	SPECIFICATION PARAGRAPH NUMBER d.	DESCRIPTION OF ITEM SUBMITTED e.	TYPE OF SUBMITTAL: DATA f.	DRAWINGS g.	INSTRUCTIONS h.	SCHEDULES i.	STATEMENTS j.	REPORTS k.	CERTIFICATES l.	SAMPLES m.	RECORDS n.	O&M MANUALS o.	CLASSIFICATION: INFORMATION ONLY p.	GOVERNMENT APPROVED q.	REVIEWER r.	CONTRACTOR SCHEDULE DATES: SUBMIT s.	APPROVAL NEEDED BY t.	MATERIAL NEEDED BY u.	CONTRACTOR ACTION: CODE v.	DATE w.	SUBMIT TO GOVERN-MENT x.	GOVERNMENT ACTION: CODE y.	DATE z.	REMARKS aa.
			1.3	Warehouse Light Fixtures and	X											X										
				Occupancy Sensor Control Systems																						
			1.3	Manufacturer's Catalog	X										X											
			1.3	Material, Equipment, and Fixture	X										X											
				Lists																						
			1.3	Installation Procedures	X										X											
			1.3	Interior Electrical Equipment		X									X											
			1.3	As-Built Drawings		X									X											
			1.3	On-Site Test					X						X											
			1.3	Factory Test Reports						X					X											
			1.3	Field Test Plan						X					X											
			1.3	Field Test Reports						X					X											
			1.3	Materials and Equipment							X				X											

SUBMITTAL REGISTER
(ER 415 1-10)

CONTRACT NO.

TITLE AND LOCATION
MILVAN Support Facility, Tooele AD

CONTRACTOR

SPECIFICATION SECTION
16528

ACTIVITY NO. a.	TRANS-MITTAL NO. b.	ITEM NO c.	SPECIFICATION PARAGRAPH NUMBER d.	DESCRIPTION OF ITEM SUBMITTED e.	TYPE OF SUBMITTAL: DATA f.	DRAWINGS g.	INSTRUCTIONS h.	SCHEDULES i.	STATEMENTS j.	REPORTS k.	CERTIFICATES l.	SAMPLES m.	RECORDS n.	O&M MANUALS o.	CLASSIFICATION: INFORMATION ONLY p.	GOVERNMENT APPROVED q.	REVIEWER r.	CONTRACTOR SCHEDULE DATES: SUBMIT s.	APPROVAL NEEDED BY t.	MATERIAL NEEDED BY u.	CONTRACTOR ACTION: CODE v.	DATE w.	SUBMIT TO GOVERN-MENT x.	GOVERNMENT ACTION: CODE y.	DATE z.	REMARKS aa.
			1.4	Equipment and Materials	X										X											
			1.4	Spare Parts	X										X											
			1.4	Lighting System		X									X											
			1.4	As-Built Drawings		X									X											
			1.4	Lighting Tests						X					X											
			1.4	Operating Test						X					X											
			1.4	Ground Resistance Measurements						X					X											
			1.4	Lighting System										X	X											

SUBMITTAL REGISTER
(ER 415 1-10)

CONTRACT NO.

TITLE AND LOCATION
MILVAN Support Facility, Tooele AD

CONTRACTOR

SPECIFICATION SECTION
16670

ACTIVITY NO. a.	TRANS-MITTAL NO. b.	ITEM NO c.	SPECIFICATION PARAGRAPH NUMBER d.	DESCRIPTION OF ITEM SUBMITTED e.	TYPE OF SUBMITTAL: DATA f.	DRAWINGS g.	INSTRUCTIONS h.	SCHEDULES i.	STATEMENTS j.	REPORTS k.	CERTIFICATES l.	SAMPLES m.	RECORDS n.	O&M MANUALS o.	CLASSIFICATION: INFORMATION ONLY p.	GOVERNMENT APPROVED q.	REVIEWER r.	CONTRACTOR SCHEDULE DATES: SUBMIT s.	APPROVAL NEEDED BY t.	MATERIAL NEEDED BY u.	CONTRACTOR ACTION: CODE v.	DATE w.	SUBMIT TO GOVERN-MENT x.	GOVERNMENT ACTION: CODE y.	DATE z.	REMARKS aa.
			1.3	Lightning Protection System		X									X											
			1.3	Materials and Equipment							X				X											

SUBMITTAL REGISTER
(ER 415 1-10)

CONTRACT NO.

TITLE AND LOCATION
MILVAN Support Facility, Tooele AD

CONTRACTOR

SPECIFICATION SECTION
16710

ACTIVITY NO. a.	TRANS-MITTAL NO. b.	ITEM NO c.	SPECIFICATION PARAGRAPH NUMBER d.	DESCRIPTION OF ITEM SUBMITTED e.	TYPE OF SUBMITTAL: DATA f.	DRAWINGS g.	INSTRUCTIONS h.	SCHEDULES i.	STATEMENTS j.	REPORTS k.	CERTIFICATES l.	SAMPLES m.	RECORDS n.	O&M MANUALS o.	CLASSIFICATION: INFORMATION ONLY p.	GOVERNMENT APPROVED q.	REVIEWER r.	CONTRACTOR SCHEDULE DATES: SUBMIT s.	APPROVAL NEEDED BY t.	MATERIAL NEEDED BY u.	CONTRACTOR ACTION: CODE v.	DATE w.	SUBMIT TO GOVERN-MENT x.	GOVERNMENT ACTION: CODE y.	DATE z.	REMARKS aa.
			1.5	Spare Parts	X										X											
			1.5	Premises Distribution System		X									X											
			1.5	Record Drawings		X									X											
			1.5	Manufacturer's Recommendations			X								X											
			1.5	Test Plan					X						X											
			1.4	Qualifications					X						X											
			1.5	Test Reports						X					X											
			1.5	Premises Distribution System							X				X											
			2.1	Materials and Equipment							X				X											
			1.5	Installers							X				X											
			1.8	Record Keeping and Documentation									X		X											

SUBMITTAL REGISTER
(ER 415 1-10)

CONTRACT NO.

TITLE AND LOCATION
MILVAN Support Facility, Tooele AD

CONTRACTOR

SPECIFICATION SECTION
16711

ACTIVITY NO. a.	TRANS-MITTAL NO. b.	ITEM NO c.	SPECIFICATION PARAGRAPH NUMBER d.	DESCRIPTION OF ITEM SUBMITTED e.	TYPE OF SUBMITTAL: DATA f.	DRAWINGS g.	INSTRUCTIONS h.	SCHEDULES i.	STATEMENTS j.	REPORTS k.	CERTIFICATES l.	SAMPLES m.	RECORDS n.	O&M MANUALS o.	CLASSIFICATION: INFORMATION ONLY p.	GOVERNMENT APPROVED q.	REVIEWER r.	CONTRACTOR SCHEDULE DATES: SUBMIT s.	APPROVAL NEEDED BY t.	MATERIAL NEEDED BY u.	CONTRACTOR ACTION: CODE v.	DATE w.	SUBMIT TO GOVERN-MENT x.	GOVERNMENT ACTION: CODE y.	DATE z.	REMARKS aa.
			1.4	Spare Parts and Equipment List	X										X											
			1.4	Telephone System		X									X											
			1.4	Record Drawings		X										X										
			3.1	Installation			X									X										
			3.4	Acceptance Tests					X							X										
			3.3	Cutover and Records					X							X										
			3.4	Acceptance Tests						X					X											
			1.4	Telephone System							X				X											
			1.3	Qualifications							X					X										

SUBMITTAL REGISTER
(ER 415 1-10)

CONTRACT NO.

TITLE AND LOCATION
MILVAN Support Facility, Tooele AD

CONTRACTOR

SPECIFICATION SECTION
16721

ACTIVITY NO. a.	TRANS-MITTAL NO. b.	ITEM NO c.	SPECIFICATION PARAGRAPH NUMBER d.	DESCRIPTION OF ITEM SUBMITTED e.	TYPE OF SUBMITTAL: DATA f.	DRAWINGS g.	INSTRUCTIONS h.	SCHEDULES i.	STATEMENTS j.	REPORTS k.	CERTIFICATES l.	SAMPLES m.	RECORDS n.	O&M MANUALS o.	CLASSIFICATION: INFORMATION ONLY p.	GOVERNMENT APPROVED q.	REVIEWER r.	CONTRACTOR SCHEDULE DATES: SUBMIT s.	APPROVAL NEEDED BY t.	MATERIAL NEEDED BY u.	CONTRACTOR ACTION: CODE v.	DATE w.	SUBMIT TO GOVERN-MENT x.	GOVERNMENT ACTION: CODE y.	DATE z.	REMARKS aa.
			1.4	Battery	X										X											
			1.4	Voltage Drop	X											X										
			1.4	Spare Parts	X										X											
			1.4	Qualifications	X											X										
			1.4	Fire Alarm Reporting System		X										X										
			1.4	Fire Alarm Reporting System			X								X											
			1.4	Training			X								X											
			1.4	Test Procedures					X						X											
			1.4	Testing						X					X											
			1.4	Equipment							X				X											
			1.4	Installer							X				X											

SUBMITTAL REGISTER
(ER 415 1-10)

CONTRACT NO.

TITLE AND LOCATION
MILVAN Support Facility, Tooele AD

CONTRACTOR

SPECIFICATION SECTION
16722

ACTIVITY NO. a.	TRANS-MITTAL NO. b.	ITEM NO c.	SPECIFICATION PARAGRAPH NUMBER d.	DESCRIPTION OF ITEM SUBMITTED e.	TYPE OF SUBMITTAL: DATA f.	DRAWINGS g.	INSTRUCTIONS h.	SCHEDULES i.	STATEMENTS j.	REPORTS k.	CERTIFICATES l.	SAMPLES m.	RECORDS n.	O&M MANUALS o.	CLASSIFICATION: INFORMATION ONLY p.	GOVERNMENT APPROVED q.	REVIEWER r.	CONTRACTOR SCHEDULE DATES: SUBMIT s.	APPROVAL NEEDED BY t.	MATERIAL NEEDED BY u.	CONTRACTOR ACTION: CODE v.	DATE w.	SUBMIT TO GOVERN-MENT x.	GOVERNMENT ACTION: CODE y.	DATE z.	REMARKS aa.
			1.3	Battery	X										X											
			1.3	Spare Parts	X										X											
			1.3	Qualifications	X											X										
			1.3	Fire Alarm Reporting System		X										X										
			1.3	Wiring Diagrams		X										X										
			1.3	Fire Alarm Reporting System			X									X										
			1.3	Training			X								X											
			1.3	Test Procedures					X							X										
			3.4	Testing						X						X										
			1.3	Equipment							X					X										

INDEX

SECTION 01410

ENVIRONMENT PROTECTION

PARAGRAPH		PAGE
PART 1	GENERAL	1
1.1	GENERAL REQUIREMENTS	1
1.2	LAND RESOURCES	5
1.3	WATER RESOURCES	6
1.4	AIR RESOURCES	7
1.5	WASTE DISPOSAL	8
1.6	POST CONSTRUCTION CLEANUP	8
1.7	RESTORATION OF LANDSCAPE DAMAGE	8
1.8	MAINTENANCE OF POLLUTION FACILITIES	8
1.9	TRAINING OF CONTRACTOR PERSONNEL	9
PART 2	PRODUCTS (NOT APPLICABLE)	9
PART 3	EXECUTION (NOT APPLICABLE)	9

SECTION 01410

ENVIRONMENT PROTECTION

PART 1 GENERAL

1.1 GENERAL REQUIREMENTS

The Contractor shall perform the work minimizing environmental pollution and damage as the result of construction operations. Environmental pollution and damage is the presence of chemical, physical, or biological elements or agents which adversely affect human health or welfare; unfavorably alter ecological balances of importance to human life; affect other species of importance to humankind; or degrade the utility of the environment for aesthetic, cultural and/or historical purposes. The control of environmental pollution and damage requires consideration of land, water, and air, and includes management of visual aesthetics, noise, solid, chemical, gaseous, and liquid waste, radiant energy and radioactive materials, as well as other pollutants. The environmental resources within the project boundaries and those affected outside the limits of permanent work shall be protected during the entire duration of this contract.

1.1.1 Subcontractors

The Contractor shall ensure compliance with this section by subcontractors.

1.1.2 Environmental Protection Plan

The Contractor shall submit an environmental protection plan within 15 days after receipt of the notice to proceed. Approval of the Contractor's plan will not relieve the Contractor of responsibility for adequate and continuing control of pollutants and other environmental protection measures. The environmental protection plan shall include, but shall not be limited to, the following:

a. A list of Federal, State, and local laws, regulations, and permits concerning environmental protection, pollution control and abatement that are applicable to the Contractor's proposed operations and the requirements imposed by those laws, regulations, and permits.

b. Methods for protection of features to be preserved within authorized work areas like trees, shrubs, vines, grasses and ground cover, landscape features, air and water quality, fish and wildlife, soil, historical, archaeological, and cultural resources.

c. Procedures to be implemented to provide the required environmental protection, to comply with the applicable laws and regulations, and to correct pollution due to accident, natural causes, or failure to follow the procedures of the environmental protection plan.

d. Location of the solid waste disposal area.

e. Drawings showing locations of any proposed temporary excavations or embankments for haul roads, stream crossings, material storage areas, structures, sanitary facilities, and stockpiles of excess or spoil materials.

f. Environmental monitoring plans for the job site, including land, water, air, and noise monitoring.

(1) All construction activity performed on Vandenberg AFB is subject to federal environmental laws including, but not limited to: The National Environmental Policy Act (NAPA); The National Historic Preservation Act (NAPA); Endangered Species Act; Resource Conservation and Recovery Act (RCRA); Comprehensive Environmental Response Liability and Compensation Act (CERLCA); Clean Water Act (CWA); Clean Air Act (CAA); Safe Drinking Water Act (SDWA), and applicable state, regional, and local equivalents. The Contractor is responsible for compliance with these laws. The Environmental Management Office, 30 SPW/ET, is the single point of contact with regulatory agencies

(2) The Contractor shall comply with all Santa Barbara County Air Pollution Control District (APCD) rules and regulations. These include, but are not limited to, the following:

(a) All demolition, site clearing, rough grading, landscape grading, excavation, backfilling, and trenching shall comply with APCD Rules 210, 302, 303, 304, and 306.

(b) All coating/painting operations shall comply with APCD Rules 102FF, 201, 317, 322, 323, 330, 337 and 339.

(c) All construction of new or modified air-conditioning systems shall comply with APCD Rule 335.

(d) All operations with solvents shall comply with APCD Rule 317 and 324.

(e) All sandblasting/corrosion control operations shall comply with California Administrative Code, Title 17, Register 84, No. 35, Sections 92000 through 92540, and shall comply with APCD Rules 303, 304, 306, 205.C.3.b.1, 901, and 1001. All sandblasting equipment must be permitted with a valid Permit to Operate (PTO) from the APCD. Only abrasives which are certified for use in sandblasting operations by the California Air Resources Board (CARB) Advisory may be used.

(3) <u>Hazardous materials:</u>

(a) The Contractor shall be responsible for the removal, storage, transportation, and disposal of all hazardous waste (Title 22, CCR) and designated waste (Title 23, CCR) in accordance with applicable federal, state, local, and base regulations. Copies of all analyses and manifests shall be given to the Government inspector at the time of removal from base and after disposal facility accepts and signs for the waste. Hazardous waste manifests will be signed by 730 CES/CEVC personnel only. Suspected hazardous materials encountered during excavation and construction will require immediate notification of Bioenvironmental Engineering Services (Base Hospital) for examination, possible sampling, and guidance for management. If hazardous or designated waste is identified after award, a negotiated equitable adjustment will be made to the Contract.

(b) Any electrical equipment removed, maintained or repaired as part of this Contract shall be tested for polychlorinated biphenyls (PCBs), a regulated hazardous waste. Testing and laboratory analyses shall be paid for by the Contractor. Testing, removal, storage, transportation and disposal of this material shall follow federal, state and base guidelines. This may include but is not limited to the following: 40 CFR 761 (Federal); Title 22 CCR (California); and OPLAN 8550-XX (VAFB).

(c) Removal of any underground storage tank (UST) shall be

coordinated with the 30 CDG monitor, 6-8095. The Contractor may be required to obtain an (Application for Permit to Remove" from the Santa Barbara County Health Care Service.

g. Traffic control plan including measures to reduce erosion of temporary roadbeds by construction traffic, especially during wet weather, and the amount of mud transported onto paved public roads by vehicles or runoff.

h. Methods of protecting surface and ground water during construction activities.

i. Plan showing the proposed activity in each portion of the work area and identifying the areas of limited use or nonuse. Plan should include measures for marking the limits of use areas.

j. Drawing of borrow area location. Protection measures required at the work site shall apply to the borrow areas including final restoration for subsequent beneficial use of the land.

k. A recycling and waste prevention plan with a list of measures to reduce consumption of energy and natural resources; for example: the possibility to shred fallen trees and use them as mulch shall be considered as an alternative to burning or burial.

l. A settling pond removal plan 45 days prior to removal work. The plan shall include the method of removing and testing of the collected sediment.

m. Training for Contractor's personnel during the construction period.

1.1.3 Permits

The Contractor shall obtain all needed permits or licenses. The Government will not obtain any permits for this project; see Contract Clause PERMITS AND RESPONSIBILITIES. The State department of natural resources, through the national pollutant discharge elimination system (NPDES), requires general permits, a notice of intent, and a notice of discontinuation. The Contractor shall be responsible for implementing the terms and requirements of the appropriate permits as needed and for payment of all fees.

1.1.4 Preconstruction Survey

Prior to starting any onsite construction activities, the Contractor and the Contracting Officer shall make a joint condition survey after which the Contractor shall prepare a brief report indicating on a layout plan the condition of trees, shrubs and grassed areas immediately adjacent to work sites and adjacent to the assigned storage area and access routes as applicable. This report will be signed by both the Contracting Officer and the Contractor upon mutual agreement as to its accuracy and completeness.

1.1.5 Meetings

The Contractor shall meet with representatives of the Contracting Officer to alter the environmental protection plan as needed for compliance with the environmental pollution control program.

1.1.6 Notification

The Contracting Officer will notify the Contractor in writing of any

observed noncompliance with the previously mentioned Federal, State or local laws or regulations, permits, and other elements of the Contractor's environmental protection plan. The Contractor shall, after receipt of such notice, inform the Contracting Officer of proposed corrective action and take such action when approved. If the Contractor fails to comply promptly, the Contracting Officer may issue an order stopping all or part of the work until satisfactory corrective action has been taken. No time extensions shall be granted or costs or damages allowed to the Contractor for any such suspensions.

1.1.7 Litigation

If work is suspended, delayed, or interrupted due to a court order of competent jurisdiction, the Contracting Officer will determine whether the order is due in any part to the acts or omissions of the Contractor, or subcontractors at any tier, not required by the terms of the contract. If it is determined that the order is not due to Contractor's failing, such suspension, delay, or interruption shall be considered as ordered by the Contracting Officer in the administration of the contract under the contract clause SUSPENSION OF WORK.

1.1.8 Previously Used Equipment

The Contractor shall thoroughly clean all construction equipment previously used at other sites before it is brought into the work areas, ensuring that soil residuals are removed and that egg deposits from plant pests are not present; the Contractor shall consult with the USDA jurisdictional office for additional cleaning requirements.

1.1.9 Payment

No separate payment will be made for work covered under this section; all costs associated with this section shall be included in the contract unit and/or lump sum prices in the Bidding Schedule.

1.2 LAND RESOURCES

The Contractor shall confine all activities to areas defined by the drawings and specifications. Prior to the beginning of any construction, the Contractor shall identify the land resources to be preserved within the work area. Except in areas indicated on the drawings or specified to be cleared, the Contractor shall not remove, cut, deface, injure, or destroy land resources including trees, shrubs, vines, grasses, topsoil, and land forms without permission. No ropes, cables, or guys shall be fastened to or attached to any trees for anchorage unless specifically authorized. Where such emergency use is permitted, the Contractor shall provide effective protection for land and vegetation resources at all times as defined in the following subparagraphs. Stone, earth or other material displaced into uncleared areas shall be removed.

1.2.1 Work Area Limits

Prior to any construction, the Contractor shall mark the areas that need not be disturbed under this contract. Isolated areas within the general work area which are to be saved and protected shall also be marked or fenced. Monuments and markers shall be protected before construction operations commence. Where construction operations are to be conducted during darkness, the markers shall be visible. The Contractor's personnel shall be knowledgeable of the purpose for marking and/or protecting particular objects.

1.2.2 Landscape

Trees, shrubs, vines, grasses, land forms and other landscape features indicated and defined on the drawings to be preserved shall be clearly identified by marking, fencing, or wrapping with boards, or any other approved techniques.

1.2.3 Unprotected Erodible Soils

Earthwork brought to final grade shall be finished as indicated. Side slopes and back slopes shall be protected as soon as practicable upon completion of rough grading. All earthwork shall be planned and conducted to minimize the duration of exposure of unprotected soils. Except in cases where the constructed feature obscures borrow areas, quarries, and waste material areas, these areas shall not initially be totally cleared. Clearing of such areas shall progress in reasonably sized increments as needed to use the developed areas as approved by the Contracting Officer.

1.2.4 Disturbed Areas

The Contractor shall effectively prevent erosion and control sedimentation through approved methods including, but not limited to, the following:

a. Retardation and control of runoff. Runoff from the construction site or from storms shall be controlled, retarded, and diverted to protected drainage courses by means of diversion ditches, benches, berms, and by any measures required by area wide plans under the Clean Water Act.

b. Erosion and sedimentation control devices. The Contractor shall construct or install temporary and permanent erosion and sedimentation control features as indicated on the drawings. Berms, dikes, drains, sedimentation basins, grassing, and mulching shall be maintained until permanent drainage and erosion control facilities are completed and operative.

c. Sediment basins. Sediment from construction areas shall be trapped in temporary or permanent sediment basins in accordance with the drawings. The basins shall accommodate the runoff of a local 5 year storm. After each storm, the basins shall be pumped dry and accumulated sediment shall be removed to maintain basin effectiveness. Overflow shall be controlled by paved weirs or by vertical overflow pipes. The collected topsoil sediment shall be reused for fill on the construction site, and/or stockpiled for use at another site. The Contractor shall institute effluent quality monitoring programs as required by State and local environmental agencies.

1.2.5 Contractor Facilities and Work Areas

The Contractor's field offices, staging areas, stockpile storage, and temporary buildings shall be placed in areas designated on the drawings or as directed by the Contracting Officer. Temporary movement or relocation of Contractor facilities shall be made only when approved. Borrow areas shall be managed to minimize erosion and to prevent sediment from entering nearby waters. Spoil areas shall be managed and controlled to limit spoil intrusion into areas designated on the drawings and to prevent erosion of soil or sediment from entering nearby waters. Spoil areas shall be developed in accordance with the grading plan indicated on the drawings. Temporary excavation and embankments for plant and/or work areas shall be controlled to protect adjacent areas from despoilment.

1.3 WATER RESOURCES

The Contractor shall keep construction activities under surveillance, management, and control to avoid pollution of surface and ground waters. Toxic or hazardous chemicals shall not be applied to soil or vegetation when such application may cause contamination of the fresh water reserve. Monitoring of water areas affected by construction shall be the Contractor's responsibility. All water areas affected by construction activities shall be monitored by the Contractor.

1.3.1 Washing and Curing Water

Waste waters directly derived from construction activities shall not be allowed to enter water areas. Waste waters shall be collected and placed in retention ponds where suspended material can be settled out or the water evaporates to separate pollutants from the water. Analysis shall be performed and results reviewed and approved before water in retention ponds is discharged.

1.3.2 Fish and Wildlife

The Contractor shall minimize interference with, disturbance to, and damage of fish and wildlife. Species that require specific attention along with measures for their protection shall be listed by the Contractor prior to beginning of construction operations.

1.4 AIR RESOURCES

Equipment operation and activities or processes performed by the Contractor in accomplishing the specified construction shall be in accordance with the State's rules and all Federal emission and performance laws and standards. Ambient Air Quality Standards set by the Environmental Protection Agency shall be maintained. Monitoring of air quality shall be the Contractor's responsibility. All air areas affected by the construction activities shall be monitored by the Contractor.

1.4.1 Particulates

Dust particles; aerosols and gaseous by-products from construction activities; and processing and preparation of materials, such as from asphaltic batch plants; shall be controlled at all times, including weekends, holidays and hours when work is not in progress. The Contractor shall maintain excavations, stockpiles, haul roads, permanent and temporary access roads, plant sites, spoil areas, borrow areas, and other work areas within or outside the project boundaries free from particulates which would cause the air pollution standards to be exceeded or which would cause a hazard or a nuisance. Sprinkling, chemical treatment of an approved type, light bituminous treatment, baghouse, scrubbers, electrostatic precipitators or other methods will be permitted to control particulates in the work area. Sprinkling, to be efficient, must be repeated to keep the disturbed area damp at all times. The Contractor must have sufficient, competent equipment available to accomplish these tasks. Particulate control shall be performed as the work proceeds and whenever a particulate nuisance or hazard occurs.

1.4.2 Hydrocarbons and Carbon Monoxide

Hydrocarbons and carbon monoxide emissions from equipment shall be controlled to Federal and State allowable limits at all times.

1.4.3 Odors

Odors shall be controlled at all times for all construction activities, processing and preparation of materials.

1.4.4 Sound Intrusions

The Contractor shall keep construction activities under surveillance and control to minimize environment damage by noise. The Contractor shall comply with the provisions of the state rules.

1.5 WASTE DISPOSAL

1.5.1 Solid Wastes

Solid wastes (excluding clearing debris) shall be placed in containers which are emptied on a regular schedule. Handling and disposal shall be conducted to prevent contamination. Segregation measures shall be employed so that no hazardous or toxic waste will become co-mingled with solid waste. The Contractor shall transport solid waste off Government property and dispose of it in compliance with Federal, State, and local requirements for solid waste disposal. The Contractor shall comply with Federal, State, and local laws and regulations.

1.5.2 Chemical Wastes

Chemicals shall be dispensed ensuring no spillage to ground or water. Periodic inspections of dispensing areas to identify leakage and initiate corrective action shall be performed and documented. This documentation will be periodically reviewed by the Government. Chemical waste shall be collected in corrosion resistant, compatible containers. Collection drums shall be monitored and removed to a staging or storage area when contents are within 150 mm (6 inches) of the top. Wastes shall be disposed of in accordance with Federal and local laws and regulations.

1.5.3 Hazardous Wastes

The Contractor shall take sufficient measures to prevent spillage of hazardous and toxic materials during dispensing and shall collect waste in suitable containers observing compatibility. The Contractor shall transport hazardous waste off Government property and dispose of it in compliance with Federal and local laws and regulations. Spills of hazardous or toxic materials shall be immediately reported to the Contracting Officer. Cleanup and cleanup costs due to spills shall be the Contractor's responsibility.

1.5.4 Burning Rubbish and Debris:

Open burning of rubbish, debris and other combustibles will not be permitted on the **Depot**.

1.6 POST CONSTRUCTION CLEANUP

The Contractor shall clean up all areas used for construction.

1.7 RESTORATION OF LANDSCAPE DAMAGE

The Contractor shall restore landscape features damaged or destroyed during construction operations outside the limits of the approved work areas.

1.8 MAINTENANCE OF POLLUTION FACILITIES

The Contractor shall maintain permanent and temporary pollution control facilities and devices for the duration of the contract or for that length of time construction activities create the particular pollutant.

1.9 TRAINING OF CONTRACTOR PERSONNEL

The Contractor's personnel shall be trained in all phases of environmental protection. The training shall include methods of detecting and avoiding pollution, familiarization with pollution standards, both statutory and contractual, and installation and care of devices, vegetative covers, and instruments required for monitoring purposes to ensure adequate and continuous environmental pollution control.

PART 2 PRODUCTS (NOT APPLICABLE)

PART 3 EXECUTION (NOT APPLICABLE)

-- End of Section --

INDEX

SECTION 01415

METRIC MEASUREMENTS

PARAGRAPH		PAGE
PART 1	GENERAL	1
1.1	REFERENCES	1
1.2	GENERAL	1
1.3	USE OF MEASUREMENTS	1
1.4	COORDINATION	2
1.5	RELATIONSHIP TO SUBMITTALS	2
PART 2	PRODUCTS (NOT APPLICABLE)	2
PART 3	EXECUTION (NOT APPLICABLE)	2

SECTION 01415

METRIC MEASUREMENTS

PART 1 GENERAL

1.1 REFERENCES

The publications listed below form a part of this specification to the extent referenced. The publications are referred to in the text by basic designation only.

AMERICAN SOCIETY FOR TESTING AND MATERIALS (ASTM)

ASTM E 380	(1993) Practice for Use of the International System of Units (SI)
ASTM E 621	(1994) Practice for Use of Metric (SI) Units in Building Design and Construction

1.2 GENERAL

This project includes metric units of measurements. The metric units used are the International System of Units (SI) developed and maintained by the General Conference on Weights and Measures (CGPM); the name International System of Units and the international abbreviation SI were adopted by the 11th CGPM in 1960. A number of circumstances require that both metric SI units and English inch-pound (I-P) units be included in a section of the specifications. When both metric and I-P measurements are included, the section may contain measurements for products that are manufactured to I-P dimensions and then expressed in mathematically converted metric value (soft metric) or, it may contain measurements for products that are manufactured to an industry recognized rounded metric (hard metric) dimensions but are allowed to be substituted by I-P products to comply with the law. Dual measurements are also included to indicate industry and/or Government standards, test values or other controlling factors, such as the code requirements where I-P values are needed for clarity or to trace back to the referenced standards, test values or codes.

1.3 USE OF MEASUREMENTS

Measurements shall be either in SI or I-P units as indicated, except for soft metric measurements or as otherwise authorized. The Contractor shall be responsible for all associated labor and materials when authorized to substitute one system of units for another and for the final assembly and performance of the specified work and/or products.

1.3.1 Hard Metric

A hard metric measurement is indicated by an SI value with no expressed correlation to an I-P value, i.e., where an SI value is not an exact mathematical conversion of an I-P value, such as the use of 100 mm in lieu of 4 inches. Hard metric measurements are often used for field data such as distance from one point to another or distance above the floor. Products are considered to be hard metric when they are manufactured to

metric dimensions or have an industry recognized metric designation.

1.3.2 Soft Metric

a. A soft metric measurement is indicated by an SI value which is a mathematical conversion of the I-P value shown in parentheses (e.g. 38.1 mm (1-1/2 inches)). Soft metric measurements are used for measurements pertaining to products, test values, and other situations where the I-P units are the standard for manufacture, verification, or other controlling factor. The I-P value shall govern while the metric measurement is provided for information.

b. A soft metric measurement is also indicated for products that are manufactured in industry designated metric dimensions but are required by law to allow substitute I-P products. These measurements are indicated by a manufacturing hard metric product dimension followed by the substitute I-P equivalent value in parentheses (e.g., 190 x 190 x 390 mm (7-5/8 x 7-5/8 x 15-5/8 inches)).

1.3.3 Neutral

A neutral measurement is indicated by an identifier which has no expressed relation to either an SI or an I-P value (e.g., American Wire Gage (AWG) which indicates thickness but in itself is neither SI nor I-P).

1.4 COORDINATION

Discrepancies, such as mismatches or product unavailability, arising from use of both metric and non-metric measurements and discrepancies between the measurements in the specifications and the measurements in the drawings shall be brought to the attention of the Contracting Officer for resolution.

1.5 RELATIONSHIP TO SUBMITTALS

Submittals for Government approval or for information only shall cover the SI or I-P products actually being furnished for the project. The Contractor shall submit the required drawings and calculations in the same units used in the contract documents describing the product or requirement unless otherwise instructed or approved. The Contractor shall use ASTM E 380 and ASTM E 621 as the basis for establishing metric measurements required to be used in submittals.

PART 2 PRODUCTS (NOT APPLICABLE)

PART 3 EXECUTION (NOT APPLICABLE)

-- End of Section --

INDEX

SECTION 01451

CONTRACTOR QUALITY CONTROL

PARAGRAPH		PAGE
PART 1	GENERAL	1
1.1	REFERENCES	1
PART 2	PRODUCTS (Not Applicable)	2
PART 3	EXECUTION	2
3.1	GENERAL	2
3.2	QUALITY CONTROL PLAN	2
3.3	COORDINATION MEETING	3
3.4	QUALITY CONTROL ORGANIZATION	4
3.5	SUBMITTALS	5
3.6	CONTROL	5
3.7	TESTS	7
3.8	COMPLETION INSPECTION	9
3.9	DOCUMENTATION	10
3.10	IMPLEMENTATION OF GOVERNMENT RESIDENT MANAGEMENT SYSTEM	11
3.12	NOTIFICATION OF NONCOMPLIANCE	11

SECTION 01451

CONTRACTOR QUALITY CONTROL

PART 1 GENERAL

1.1 REFERENCES

The publications listed below form a part of this specification to the extent referenced. The publications are referred to in the text by basic designation only.

AMERICAN SOCIETY FOR TESTING AND MATERIALS (ASTM)

ASTM C 1077	(1996) Standard Practice for Laboratories Testing Concrete and Concrete Aggregates for Use in Construction and Criteria for Laboratory Evaluation
ASTM D 3666	(1996) Standard Specification for Minimum Requirements for Agencies Testing and Inspecting Bituminous Paving Materials
ASTM D 3740	(1994a) Minimum Requirements for Agencies Engaged in the Testing and/or Inspection of Soil and Rock as Used in Engineering Design and Construction
ASTM E 329	(1995b) Agencies Engaged in the Testing and/or Inspection of Materials Used in Construction

SACRAMENTO DISTRICT CONSTRUCTION CONTROL MANUAL

Latest edition published by the U.S. Army Engineer District-Sacramento, Sacramento, California. Copies of this publication are available upon request from the Sacramento District Office during the bidding period. In addition, two copies of the Manual and an initial supply of test forms will be furnished to the successful bidder upon award of this contract. This Manual specifies the minimum number of tests to be made and includes forms which shall be used to report data.

SPK FORM 437 - MATERIALS TEST SUMMARY

Published by U.S. Army Engineer District - Sacramento, Sacramento, California. One set of this form (6 pages), is included in the bid package issued by the Sacramento District Office. This form will be used to summarize the minimum number of materials testing to be made during construction. The successful bidder shall submit three copies of the form to the Contracting Officer's Representative during the preconstruction meeting. To complete the form, the use of the Construction Control Manual is mandatory.

PART 2 PRODUCTS (Not Applicable)

PART 3 EXECUTION

3.1 GENERAL

The Contractor is responsible for quality control and shall establish and maintain an effective quality control system in compliance with the Contract Clause titled "Inspection of Construction." The quality control system shall consist of plans, procedures, and organization necessary to produce an end product which complies with the contract requirements. The system shall cover all construction operations, both onsite and offsite, and shall be keyed to the proposed construction sequence. The project superintendent will be held responsible for the quality of work on the job and is subject to removal by the Contracting Officer for non-compliance with quality requirements specified in the contract. The project superintendent in this context shall mean the individual with the responsibility for the overall management of the project including quality and production.

3.2 QUALITY CONTROL PLAN

3.2.1 General

The Contractor shall furnish for review by the Government, not later than 15 days after receipt of notice to proceed, the Contractor Quality Control (CQC) Plan proposed to implement the requirements of the Contract Clause titled "Inspection of Construction." The plan shall identify personnel, procedures, control, instructions, test, records, and forms to be used. The Government will consider an interim plan for the first 60 days of operation. Construction will be permitted to begin only after acceptance of the CQC Plan or acceptance of an interim plan applicable to the particular feature of work to be started. Work outside of the features of work included in an accepted interim plan will not be permitted to begin until acceptance of a CQC Plan or another interim plan containing the additional features of work to be started.

3.2.2 Content of the CQC Plan

The CQC Plan shall include, as a minimum, the following to cover all construction operations, both onsite and offsite, including work by subcontractors, fabricators, suppliers, and purchasing agents:

a. A description of the quality control organization, including a chart showing lines of authority and acknowledgment that the CQC staff shall implement the three phase control system for all aspects of the work specified. The staff shall include a CQC System Manager who shall report to the project superintendent.

b. The name, qualifications (in resume format), duties, responsibilities, and authorities of each person assigned a CQC function.

c. A copy of the letter to the CQC System Manager signed by an authorized official of the firm which describes the responsibilities and delegates sufficient authorities to adequately perform the functions of the CQC System Manager, including authority to stop work which is not in compliance with the contract. The CQC System Manager shall issue letters of direction to all other various quality control representatives outlining duties, authorities, and responsibilities. Copies of these letters shall also be furnished to the Government.

d. Procedures for scheduling, reviewing, certifying, and managing submittals, including those of subcontractors, offsite fabricators, suppliers, and purchasing agents. These procedures shall be in accordance with Section 01330 SUBMITTAL PROCEDURES.

e. Control, verification, and acceptance testing procedures for each specific test to include the test name, specification paragraph requiring test, feature of work to be tested, test frequency, and person responsible for each test. (Laboratory facilities will be approved by the Contracting Officer.)

f. Procedures for tracking preparatory, initial, and follow-up control phases and control, verification, and acceptance tests including documentation.

g. Procedures for tracking construction deficiencies from identification through acceptable corrective action. These procedures shall establish verification that identified deficiencies have been corrected.

h. Reporting procedures, including proposed reporting formats.

i. A list of the definable features of work. A definable feature of work is a task which is separate and distinct from other tasks, has separate control requirements, and may be identified by different trades or disciplines, or it may be work by the same trade in a different environment. Although each section of the specifications may generally be considered as a definable feature of work, there are frequently more than one definable features under a particular section. This list will be agreed upon during the coordination meeting.

3.2.3 Acceptance of Plan

Acceptance of the Contractor's plan is required prior to the start of construction. Acceptance is conditional and will be predicated on satisfactory performance during the construction. The Government reserves the right to require the Contractor to make changes in his CQC Plan and operations including removal of personnel, as necessary, to obtain the quality specified.

3.2.4 Notification of Changes

After acceptance of the CQC Plan, the Contractor shall notify the Contracting Officer in writing of any proposed change. Proposed changes are subject to acceptance by the Contracting Officer.

3.3 COORDINATION MEETING

After the Preconstruction Conference, before start of construction, and prior to acceptance by the Government of the CQC Plan, the Contractor shall meet with the Contracting Officer or Authorized Representative and discuss the Contractor's quality control system. The CQC Plan shall be submitted for review a minimum of 14 calendar days prior to the Coordination Meeting. During the meeting, a mutual understanding of the system details shall be developed, including the forms for recording the CQC operations, control activities, testing, administration of the system for both onsite and offsite work, and the interrelationship of Contractor's Management and control with the Government's Quality Assurance. Minutes of the meeting shall be prepared by the Government and signed by both the Contractor and the Contracting Officer. The minutes shall become a part of the contract file. There may be occasions when subsequent conferences will be called by either party to reconfirm mutual understandings and/or address deficiencies in the CQC system or procedures which may require corrective action by the Contractor.

3.4 QUALITY CONTROL ORGANIZATION

3.4.1 General

The requirements for the CQC organization are a CQC System Manager and sufficient number of additional qualified personnel to ensure contract compliance. The Contractor shall provide a CQC organization which shall be at the site at all times during progress of the work and with complete authority to take any action necessary to ensure compliance with the contract. All CQC staff members shall be subject to acceptance by the Contracting Officer.

3.4.2 CQC System Manager

The Contractor shall identify as CQC System Manager an individual within his organization at the site of the work who shall be responsible for overall management of CQC and have the authority to act in all CQC matters for the Contractor. The CQC System Manager shall be a construction person with a minimum of 5 years in related work. This CQC System Manager shall be on the site at all times during construction and will be employed by the prime Contractor. The CQC System Manager shall be assigned no other duties. An alternate for the CQC System Manager will be identified in the plan to serve in the event of the System Manager's absence. The requirements for the alternate will be the same as for the designated CQC System Manager.

3.4.3 CQC Personnel

In addition to CQC personnel specified elsewhere in the contract, the Contractor shall provide as part of the CQC organization specialized personnel to assist the CQC System Manager for the following areas: electrical, mechanical, civil, structural, and architectural. These individuals shall be directly employed by the prime Contractor; be responsible to the CQC System Manager; be physically present at the construction site during work on their areas of responsibility; have the necessary education and/or experience in accordance with the experience matrix listed herein. These individuals shall have no other duties other than quality control.

Experience Matrix

Area	Qualifications
a. Civil	Graduate Civil Engineer with 2 years experience in the type of work being performed on this project or technician with 5 yrs related experience
b. Mechanical	Graduate Mechanical Engineer with 2 yrs experience or person with 5 yrs related experience
c. Electrical	Graduate Electrical Engineer with 2 yrs related experience or person with 5 yrs related experience
d. Structural	Graduate Structural Engineer with 2 yrs experience or person with 5 yrs related experience
e. Architectural	Graduate Architect with 2 yrs

experience or person with 5 yrs
related experience

3.4.4 Additional Requirement

In addition to the above experience and/or education requirements the CQC System Manager shall have completed the course entitled "Construction Quality Management For Contractors". This course is periodically offered by the Sacramento District, contact the Contracting Officer for more information.

3.4.5 Organizational Changes

The Contractor shall maintain the CQC staff at full strength at all times. When it is necessary to make changes to the CQC staff, the Contractor shall revise the CQC Plan to reflect the changes and submit the changes to the Contracting Officer for acceptance.

3.5 SUBMITTALS

Submittals shall be made as specified in Section 01330 SUBMITTAL PROCEDURES. The CQC organization shall be responsible for certifying that all submittals are in compliance with the contract requirements.

3.6 CONTROL

Contractor Quality Control is the means by which the Contractor ensures that the construction, to include that of subcontractors and suppliers, complies with the requirements of the contract. At least three phases of control shall be conducted by the CQC System Manager for each definable feature of work as follows:

3.6.1 Preparatory Phase

This phase shall be performed prior to beginning work on each definable feature of work, after all required plans/documents/materials are approved/accepted, and after copies are at the work site. This phase shall include:

a. A review of each paragraph of applicable specifications.

b. A review of the contract drawings.

c. A check to assure that all materials and/or equipment have been tested, submitted, and approved.

d. Review of provisions that have been made to provide required control inspection and testing.

e. Examination of the work area to assure that all required preliminary work has been completed and is in compliance with the contract.

f. A physical examination of required materials, equipment, and sample work to assure that they are on hand, conform to approved shop drawings or submitted data, and are properly stored.

g. A review of the appropriate activity hazard analysis to assure safety requirements are met.

h. Discussion of procedures for controlling quality of the work including repetitive deficiencies. Document construction tolerances and workmanship standards for that feature of work.

i. A check to ensure that the portion of the plan for the work to be performed has been accepted by the Contracting Officer.

j. Discussion of the initial control phase.

k. The Government shall be notified at least 48 hours in advance of beginning the preparatory control phase. This phase shall include a meeting conducted by the CQC System Manager and attended by the superintendent, other CQC personnel (as applicable), and the foreman responsible for the definable feature. The results of the preparatory phase actions shall be documented by separate minutes prepared by the CQC System Manager and attached to the daily CQC report. The Contractor shall instruct applicable workers as to the acceptable level of workmanship required in order to meet contract specifications.

3.6.2 Initial Phase

This phase shall be accomplished at the beginning of a definable feature of work. The following shall be accomplished:

a. A check of work to ensure that it is in full compliance with contract requirements. Review minutes of the preparatory meeting.

b. Verify adequacy of controls to ensure full contract compliance. Verify required control inspection and testing.

c. Establish level of workmanship and verify that it meets minimum acceptable workmanship standards. Compare with required sample panels as appropriate.

d. Resolve all differences.

e. Check safety to include compliance with and upgrading of the safety plan and activity hazard analysis. Review the activity analysis with each worker.

f. The Government shall be notified at least 48 hours in advance of beginning the initial phase. Separate minutes of this phase shall be prepared by the CQC System Manager and attached to the daily CQC report. Exact location of initial phase shall be indicated for future reference and comparison with follow-up phases.

g. The initial phase should be repeated for each new crew to work onsite, or any time acceptable specified quality standards are not being met.

3.6.3 Follow-up Phase

Daily checks shall be performed to assure control activities, including control testing, are providing continued compliance with contract requirements, until completion of the particular feature of work. The checks shall be made a matter of record in the CQC documentation. Final follow-up checks shall be conducted and all deficiencies corrected prior to the start of additional features of work which may be affected by the deficient work. The Contractor shall not build upon nor conceal non-conforming work.

3.6.4 Additional Preparatory and Initial Phases

Additional preparatory and initial phases shall be conducted on the same definable features of work if the quality of on-going work is unacceptable, if there are changes in the applicable CQC staff, onsite production supervision or work crew, if work on a definable feature is resumed after a substantial period of inactivity, or if other problems develop.

3.7 TESTS

3.7.1 Testing Procedure

The Contractor shall perform specified or required tests to verify that control measures are adequate to provide a product which conforms to contract requirements. Upon request, the Contractor shall furnish to the Government duplicate samples of test specimens for possible testing by the Government. Testing includes operation and/or acceptance tests when specified. The Contractor shall procure the services of an independent commercial laboratory that has been inspected by the National Institute of Standards and Technology (NIST) for compliance with ASTM D 3740, D 3666 or C 1077, as applicable. In addition, the laboratory shall be submitted as part of the Contractor’s Quality Control Plan and approved by the Contracting Officer. The Contractor shall perform the following activities and record and provide the following data:

a. Verify that testing procedures comply with contract requirements.

b. Verify that facilities and testing equipment are available and comply with testing standards.

c. Check test instrument calibration data against certified standards.

d. Verify that recording forms and test identification control number system, including all of the test documentation requirements, have been prepared.

e. Results of all tests taken, both passing and failing tests, shall be recorded on the CQC report for the date taken. Specification paragraph reference, location where tests were taken, and the sequential control number identifying the test shall be given. If approved by the Contracting Officer, actual test reports may be submitted later with a reference to the test number and date taken. An information copy of tests performed by an offsite or commercial test facility shall be provided directly to the Contracting Officer. Failure to submit timely test reports as stated may result in nonpayment for related work performed and disapproval of the test facility for this contract.

3.7.2 Testing Laboratories

3.7.2.1 Capability Check

The Government reserves the right to check laboratory equipment in the proposed laboratory for compliance with the standards set forth in the contract specifications and to check the laboratory technician's testing procedures and techniques. Laboratories utilized for testing soils, concrete, asphalt, and steel shall meet criteria detailed in ASTM D 3740 and ASTM E 329.

3.7.3 Onsite Laboratory

The Government reserves the right to utilize the Contractor's control testing laboratory and equipment to make assurance tests and to check the Contractor's testing procedures, techniques, and test results at no additional cost to the Government.

3.7.4 Furnishing or Transportation of Samples for Testing

Costs incidental to the transportation of samples or materials will be borne by the Contractor. Samples of materials for test verification and acceptance testing by the Government shall be delivered to the QA laboratory designated by the Contracting Officer.

Coordination for each specific test, exact delivery location and dates will be made through the Area Office.

3.8 COMPLETION INSPECTION

3.8.1 Punch-Out Inspection

Near the completion of all work or any increment thereof established by a completion time stated in the Special Clause entitled "Commencement, Prosecution, and Completion of Work," or stated elsewhere in the specifications, the CQC System Manager shall conduct an inspection of the work and develop a punch list of items which do not conform to the approved drawings and specifications. Such a list of deficiencies shall be included in the CQC documentation, as required by paragraph DOCUMENTATION below, and shall include the estimated date by which the deficiencies will be corrected. The CQC System Manager or staff shall make a second inspection to ascertain that all deficiencies have been corrected. Once this is accomplished, the Contractor shall notify the Government that the facility is ready for the Government Pre-Final inspection.

3.8.2 Pre-Final Inspection

The Government will perform this inspection to verify that the facility is complete and ready to be occupied. A Government Pre-Final Punch List may be developed as a result of this inspection. The Contractor's CQC System Manager shall ensure that all items on this list have been corrected before notifying the Government so that a Final inspection with the customer can be scheduled. Any items noted on the Pre-Final inspection shall be corrected in a timely manner. These inspections and any deficiency corrections required by this paragraph shall be accomplished within the time slated for completion of the entire work or any particular increment thereof if the project is divided into increments by separate completion dates.

3.8.3 Final Acceptance Inspection

The Contractor's Quality Control Inspection personnel, plus the superintendent or other primary management person, and the Contracting Officer's Representative shall be in attendance at this inspection. Additional Government personnel including, but not limited to, those from Base/Post Civil Facility Engineer user groups, and major commands may also be in attendance. The final acceptance inspection will be formally scheduled by the Contracting Officer based upon results of the Pre-Final inspection. Notice shall be given to the Contracting Officer at least 14 days prior to the final acceptance inspection and shall include the Contractor's assurance that all specific items previously identified to the Contractor as being unacceptable, along with all remaining work performed under the contract, will be complete and acceptable by the date scheduled for the final acceptance

inspection. Failure of the Contractor to have all contract work acceptably complete for this inspection will be cause for the Contracting Officer to bill the Contractor for the Government's additional inspection cost in accordance with the contract clause titled "Inspection of Construction".

3.9 DOCUMENTATION

The Contractor shall maintain current records providing factual evidence that required quality control activities and/or tests have been performed. These records shall include the work of subcontractors and suppliers and shall be on an acceptable form that includes, as a minimum, the following information:

a. Contractor/subcontractor and their area of responsibility.

b. Operating plant/equipment with hours worked, idle, or down for repair.

c. Work performed each day, giving location, description, and by whom. When Network Analysis (NAS) is used, identify each phase of work performed each day by NAS activity number.

d. Test and/or control activities performed with results and references to specifications/drawings requirements. The control phase should be identified (Preparatory, Initial, Follow-up). List deficiencies noted along with corrective action.

e. Quantity of materials received at the site with statement as to acceptability, storage, and reference to specifications/drawings requirements.

f. Submittals reviewed, with contract reference, by whom, and action taken.

g. Off-site surveillance activities, including actions taken.

h. Job safety evaluations stating what was checked, results, and instructions or corrective actions.

i. Instructions given/received and conflicts in plans and/or specifications.

j. Contractor's verification statement.

These records shall indicate a description of trades working on the project; the number of personnel working; weather conditions encountered; and any delays encountered. These records shall cover both conforming and deficient features and shall include a statement that equipment and materials incorporated in the work and workmanship comply with the contract. The original and one copy of these records in report form shall be furnished to the Government daily within 24 hours after the date covered by the report, except that reports need not be submitted for days on which no work is performed. As a minimum, one report shall be prepared and submitted for every 7 days of no work and on the last day of a no work period. All calendar days shall be accounted for throughout the life of the contract. The first report following a day of no work shall be for that day only. Reports shall be signed and dated by the CQC System Manager. The report from the CQC System Manager shall include copies of test reports and copies of reports prepared by all subordinate quality control personnel.

3.10 IMPLEMENTATION OF GOVERNMENT RESIDENT MANAGEMENT SYSTEM

The Contractor shall utilize a Government furnished CQC Daily Report Form. This form may be in addition to other Contractor desired reporting forms. However, all other such reporting forms shall be consolidated into this one Government furnished Daily CQC Report Form. The Contractor will also be required to complete Government-Furnished Input Forms which lists, but is not limited to, Prime Contractor staffing; letter codes; planned cumulative progress earnings; subcontractor information showing trade, name, address, and insurance expiration dates; definable features of work; pay activity and activity information; required Quality Control tests tied to individual activities; planned User Schooling tied to specific specification paragraphs and Contractor activities; and submittal information relating to specification section, description, activity number, review period and expected procurement period. The sum of all activity values shall equal the contract amount, and all Bid Items shall be separately identified, in accordance with the PRICING SCHEDULE. These forms shall be completed to the satisfaction of the Contracting Officer prior to any contract payment (except for Bonds, Insurance and/or Mobilization, as approved by the Contracting Officer) and shall be updated as required.

a. During the course of the contract, the Contractor will receive various Quality Assurance comments from the Government that will reflect corrections needed to Contractor activities or reflect outstanding or future items needing the attention of the Contractor. The Contractor will acknowledge receipt of these comments by specific number reference on his Daily CQC Report and will also reflect on his Daily CQC report when these items are specifically completed or corrected.

b. The Contractor's schedule system shall include, as specific and separate activities, all Preparatory Phase Meetings (inspections); all O&M Manuals; and all Test Plans of Electrical and Mechanical Equipment or Systems that require validation testing or instructions to Government Representatives.

3.11 SAMPLE FORMS

Sample forms enclosed at the end of this section.

1. Test Report Form
2. Daily Contractor Quality Control Form
3. Preparatory Inspection Report Form
4. SPK 437 - Materials Test Summary

3.12 NOTIFICATION OF NONCOMPLIANCE

The Contracting Officer will notify the Contractor of any detected noncompliance with the foregoing requirements. The Contractor shall take immediate corrective action after receipt of such notice. Such notice, when delivered to the Contractor at the work site, shall be deemed sufficient for the purpose of notification. If the Contractor fails or refuses to comply promptly, the Contracting Officer may issue an order stopping all or part of the work until satisfactory corrective action has been taken. No part of the time lost due to such stop orders shall be made the subject of claim for extension of time or for excess costs or damages by the Contractor.

-- End of Section --

(Sample of typical Contractor's Test Report)

TEST REPORT

STRUCTURAL OR BUILDING _____

CONTRACT NO. _____

DESCRIPTION OF ITEM, SYSTEM OR PART OF SYSTEM TESTED: _____

_____

_____

_____

DESCRIPTION OF TEST: _____

_____

_____

_____

_____

NAME AND TITLE OF PERSON IN CHARGE OF PERFORMING TESTS FOR CONTRACTOR:

NAME _____

TITLE _____

SIGNATURE _____

I HEREBY CERTIFY THAT THE ABOVE DESCRIBED ITEM, SYSTEM OR PART OF SYSTEM HAS BEEN TESTED AS INDICATED ABOVE AND FOUND TO BE ENTIRELY SATISFACTORY AS REQUIRED IN THE CONTRACT SPECIFICATIONS.

_____

SIGNATURE OF CONTRACTOR QUALITY CONTROL INSPECTOR

DATE _____

REMARKS: _____

_____

_____

_____

_____

(Sample of Typical DAILY CONSTRUCTION QUALITY CONTROL REPORT)

CONTRACTOR'S NAME
(Address)

DAILY CONSTRUCTION QUALITY CONTROL REPORT

Date: _____ Report No. _____

Contract No.: _____

Name and Location of Project: _____

WEATHER: (Clear) (P. Cloudy) (Cloudy) Temperature: _____

Rainfall _____ Inches Min., _____ Max., _____

	Contractor/Subcontractors	Area of Responsibility
a.	_____	_____
b.	_____	_____
c.	_____	_____
d.	_____	_____
e.	_____	_____
f.	_____	_____
g.	_____	_____

1. WORK PERFORMED TODAY: (Indicate location and description of work performed. Refer to work performed by prime and/or subcontractors by letter in Table above.)

_____

2. PREPARATORY INSPECTION FOR NEXT ITEM OF WORK: (Materials/shop drawings approved, required control testing arranged, all preliminary work has been accomplished as per plans and specifications.)

3. INITIAL INSPECTION: (Address quality of workmanship, assure control testing and materials being used in all work are in compliance with plans and specifications).

---

4. FOLLOW-UP INSPECTIONS: (Assure control testing performed as required and all work performed continues to be in compliance with plans and specifications).

---

5. VERBAL INSTRUCTIONS RECEIVED: (List any instructions given by Government personnel on construction deficiencies, retesting required, etc., with action to be taken.)

---

6. REMARKS: (Cover any conflicts in plans, specifications, or instructions or any delay to the job attributable to weather conditions.)

7. RESULTS OF SAFETY INSPECTION: (Note safety violations and corrective action taken. Indicate phase of work where violations occurred.)

---

8. UPCOMING WORK: (Indicate next major phase of work anticipated and approximate date of Preparatory Inspection meeting to cover this work.)

EQUIPMENT DATA: (Indicate items of construction equipment, other than hand tools, at the job site and whether or not used.)

CONTRACTOR'S VERIFICATION: The above report is complete and correct and all material and equipment used and work performed during this reporting period area in compliance with the contract plans and specifications except as noted above.

_____
Contractor's Approved/Authorized Representative

(Sample of Typical Form)

PREPARATORY INSPECTION OUTLINE
(PART-I)

Contract No.: _____ Date: _____

Title and No. of Technical Section: _____

_____

Reference Contract Drawings: _____

A. PLANNED ATTENDANTS:

	NAME	POSITION	COMPANY
1.			
2.			
3.			
4.			

B. SUBMITTALS REQUIRED TO BEGIN WORK:

	ITEM	SUBMITTAL NO.	ACTION CODE
a.			
b.			
c.			
d.			

I HEREBY DECLARE THAT THE ABOVE REQUIRED MATERIALS DELIVERED TO THE JOBSITE ARE CERTIFIED TO BE THE SAME AS THOSE SUBMITTED AND APPROVED.

_____
QUALITY CONTROL REPRESENTATIVE

C. EQUIPMENT TO BE USED IN EXECUTING WORK:

a. _____
b. _____
c. _____

D. WORK AREAS EXAMINED TO ASCERTAIN THAT ALL PRELIMINARY WORK HAS BEEN COMPLETED:

_____
_____

E. METHODS AND PROCEDURES FOR PERFORMING QUALITY CONTROL - INCLUDING SPECIFIC TESTING REQUIREMENTS:

_____
_____

F. COMPLIANCE WITH AND UPGRADING OF THE SAFETY PLAN AND ACTIVITY HAZARD ANALYSIS INCLUDING REVIEW OF THE ACTIVITY ANALYSIS WITH EACH WORKER:

_____
_____

THE ABOVE METHODS AND PROCEDURES OUTLINED ARE CERTIFIED TO COMPLY WITH THE CONTRACT REQUIREMENTS AND WILL BE PERFORMED AS PLANNED AND SPECIFIED.

_____
QUALITY CONTROL REPRESENTATIVE

(Sample of Typical Form)

PREPARATORY INSPECTION OUTLINE
(PART - II)

A. PERSONS IN ATTENDANCE:

	NAME	POSITION	COMPANY
1.			
2.			
3.			
4.			
5.			
6.			

B. ITEMS OF MUTUAL UNDERSTANDING DEVELOPED DURING REVIEW OF PREPARATORY OUTLINE AND CONTRACT REQUIREMENTS: (Contract items not specifically covered during the preparatory inspection conference are assumed to be in strict conformance with the contract requirements.)

1. _____

2. _____

3. _____

4. _____

5. _____

6. _____

7. _____

8. _____

THE ITEMS NOTED ABOVE CONSTITUTE A MEMORANDUM OF MUTUAL UNDERSTANDING AND WILL BE PERFORMED AS PLANNED AND SPECIFIED.

_____
CONTRACTOR'S APPROVED/AUTHORIZED REPRESENTATIVE

(Sample of Typical Form)

INITIAL PHASE CHECK LIST

Contract No.: _____ Date: _____

Specification Paragraph or Section: _____

Description and Location of Work Inspected: _____

_____

REFERENCE CONTRACT DRAWINGS: _____

A. PERSONNEL PRESENT:

	NAME	POSITION	COMPANY
1.			
2.			
3.			
4.			

B. MATERIALS BEING USED ARE IN STRICT COMPLIANCE WITH THE CONTRACT PLANS AND SPECIFICATIONS: YES_____ NO_____

IF NOT, EXPLAIN: _____

_____

_____

C. PROCEDURES AND/OR WORK METHODS WITNESSED ARE IN STRICT COMPLIANCE WITH THE CONTRACT SPECIFICATIONS: YES_____ NO_____

IF NOT, EXPLAIN: _____

_____

_____

D. WORKMANSHIP IS ACCEPTABLE: YES_____ NO_____

STATE AREAS WHERE IMPROVEMENT IS NEEDED: _____

_____

_____

E. SAFETY VIOLATIONS NOTED: YES_____ NO_____

IF YES, CORRECTIVE ACTION TAKEN: _____

_____

_____

_____

QUALITY CONTROL REPRESENTATIVE

MATERIALS TEST SUMMARY

(See reverse for instructions)

CONTRACT NUMBER	PROJECT	DATE

SECTION/TITLE	TEST	MINIMUM TESTS *(Estimated)*		TOTAL TESTS *(Performed)*			
				CQC		QA	
		CQC	QA	PASS	FAIL	PASS	FAIL
2_____ GRADING	A. LAB-MOISTURE DENSITY W/GRADATION						
	& ATTERBERG LIMITS						
	B. FIELD DENSITY*						
	**(Select materials with gradation)*						
2_____ BUILDINGS	A. LAB-MOISTURE DENSITY W/GRADATION						
	& ATTERBERG LIMITS						
	B. FIELD DENSITY*						
	**(Select materials with gradation)*						
2_____ UTILITIES SYSTEM	A. LAB-MOISTURE DENSITY W/GRADATION						
	& ATTERBERG LIMITS						
	B. FIELD DENSITY*						
	**(Select materials with gradation)*						
2_____ DRAINAGE SYSTEM	A. LAB-MOISTURE DENSITY W/GRADATION						
	& ATTERBERG LIMITS						
	B. FIELD DENSITY*						
	**(Select materials with gradation)*						

MATERIALS TEST SUMMARY

CONTRACT NUMBER	PROJECT	DATE

SECTION/TITLE	TEST	MINIMUM TESTS (Estimated)		TOTAL TESTS (Performed)			
				CQC		QA	
		CQC	QA	PASS	FAIL	PASS	FAIL
2_____ SUBGRADE ROADWAYS	A. LAB-MOISTURE DENSITY W/GRADATION						
	& ATTERBERG LIMITS						
	B. FIELD DENSITY W/GRADATION						
2_____ SUBBASE COURSE	A. LAB-MOISTURE DENSITY W/GRADATION						
	& ATTERBERG LIMITS						
	B. FIELD DENSITY W/GRADATION						
2_____ BASE COURSE	A. LAB-MOISTURE DENSITY W/GRADATION						
	& ATTERBERG LIMITS						
	B. FIELD DENSITY W/GRADATION						
2_____ BITUMINOUS COURSE	A. MARSHALL METHOD						
	B. EXTRACTION (HOT MIX)						
	C. GRADATION (HOT MIX)						
	D. GRADATION (HOT BINS)						
	E. FIELD COMPACTION (CORES)						

CESPK FORM 437
1 AUG 88

MATERIALS TEST SUMMARY

CONTRACT NUMBER	PROJECT	DATE

SECTION/TITLE	TEST	MINIMUM TESTS (Estimated)		TOTAL TESTS (Performed)			
				CQC		QA	
		CQC	QA	PASS	FAIL	PASS	FAIL
2_____ CONCRETE–PAVEMENT	A. *STRENGTH						
	B. SLUMP						
	C. ENTRAINED AIR						
	D. GRADATION						
*(COMPRESSIVE) *(FLEXURAL)							
2_____ SIDEWALK, CURB, & GUTTER	A. COMPRESSIVE STRENGTH						
	B. SLUMP						
	C. ENTRAINED AIR						
	D. GRADATION						
2_____							
2_____							

CESPK FORM 437
1 AUG 88

MATERIALS TEST SUMMARY

CONTRACT NUMBER	PROJECT	DATE

SECTION/TITLE	TEST	MINIMUM TESTS (Estimated)		TOTAL TESTS (Performed)			
				CQC		QA	
		CQC	QA	PASS	FAIL	PASS	FAIL
3_____ CONCRETE – BUIDLING	A. COMPRESSIVE STRENGTH						
	B. SLUMP						
	C. ENTRAINED AIR						
	D. GRADATION						
3_____ CONCRETE – LITEWEIGHT	A. COMPRESSIVE STRENGTH						
	B. SLUMP						
	C. ENTRAINED AIR						
	D. UNIT WEIGHT (PLASTIC)						
	E. UNIT WEIGHT (28 DAY–DRY)						
	F. GRADATION						
3_____ CONCRETE – TILT UP	A. COMPRESSIVE STRENGTH						
	B. SLUMP						
	C. ENTRAINED AIR						
	D. GRADATION						
3_____							

CESPK FORM 437
1 AUG 88

MATERIALS TEST SUMMARY

CONTRACT NUMBER	PROJECT	DATE

SECTION/TITLE	TEST	MINIMUM TESTS (Estimated)		TOTAL TESTS (Performed)			
				CQC		QA	
		CQC	QA	PASS	FAIL	PASS	FAIL
4_____ MASONRY	A. MORTAR COMPRESSIVE STRENGTH						
	B. GROUT COMPRESSIVE STRENGTH						
	C. GRADATION						
	D. CMU – SHRINKAGE, AIR DRY						
	CONDITION, UNIT WEIGHT						
	& COMPRESSIVE STRENGTH						

CESPK FORM 437
1 AUG 88

INSTRUCTIONS FOR COMPLETION OF CESPK FORM 437
MATERIALS TEST SUMMARY

1. **All entries shall be made with pen.**

2. **SECTION/TITLE**: Sections which require contractor quality control testing during the placement of construction materials are listed. The titles are condensed versions of the full specification title. Review the technical specifications and complete as follows:

   A. Insert after a number the applicable letter to complete the section designation. For example, 2____ grading to 2_A_ grading.

   B. If a section is not a part of the technical specifications, insert 'not applicable' (N/A) after a number. For example, 2_____ grading to 2_N/A_ grading.

   C. Blank spaces are provided to permit addition of other sections as required by the specifications.

3. **TEST**: Tests that are specified to be performed by the technical specifications are listed for each section. Blank spaces are provided for additional tests as required by the specifications. An asterisk indicates that action should be taken as noted. For example, gradation must be taken when testing field density for select materials in **SECTION: GRADING**.

4. **MINIMUM TESTS (ESTIMATED)**: Under the Contractor Quality Control (CQC) column, enter the minimum number of tests required to accomplish the specified work. For the prelisted selections, the test frequencies are specified in the Construction Control Manual (CCM). For an additive section, the CCM may not indicate the test frequency. In this case, check the technical specifications or the contract drawings for requirements. Quality Assurance (QA) column will be completed by the Contracting Officer Representative (COR).

5. **TOTAL TESTS (PERFORMED)**: CQC and QA columns will be completed by the COR.

*U.S. GPO: 1989-785-022/13506

INDEX

SECTION 01500

TEMPORARY CONSTRUCTION FACILITIES

PARAGRAPH		PAGE
PART 1	GENERAL	1
1.1	APPLICABLE PUBLICATIONS	1
1.2	GENERAL REQUIREMENTS	1
1.3	BULLETIN BOARD, PROJECT SIGN, AND PROJECT SAFETY SIGN	2
1.4	CONTRACTOR'S TEMPORARY FACILITIES	3
1.5	TEMPORARY PROJECT SAFETY FENCING	5
1.6	HOUSEKEEPING AND CLEANUP	5
1.7	RESTORATION OF STORAGE AREA	5
PART 2	PRODUCTS (NOT APPLICABLE)	5
PART 3	EXECUTION (NOT APPLICABLE)	5

SECTION 01500

TEMPORARY CONSTRUCTION FACILITIES

PART 1 GENERAL

1.1 APPLICABLE PUBLICATIONS:

The publications listed below form a part of this specification to the extent referenced. The publications are referred to in the text by the basic designation only.

DEPARTMENT OF COMMERCE (DOC)

DOC PS 1	(1983) Construction and Industrial Plywood
DOC PS 20	(1970) American Softwood Lumber Standard.

FEDERAL SPECIFICATIONS (FS)

FS TT-E-2784	(Rev A) Enamel (Acrylic-Emulsion, Exterior)

AMERICAN NATIONAL STANDARDS INSTITUTE (ANSI)

ANSI Z535.1	(1991) Safety Color Code

AMERICAN SOCIETY FOR TESTING AND MATERIALS (ASTM)

ASTM F 547	(1977; R 1990) Definitions of Terms Relating to Nails for Use with Wood and Wood-Base Materials

U.S. ARMY CORPS OF ENGINEERS

EM 385-1-1	Safety and Health Requirements Manual (3 September 1996).

WEST COAST LUMBER INSPECTION BUREAU (WCLIB)

WCLIB 16	(1970; Rev 1983) Standard Grading and Dressing Rules for Douglas Fir, Western Hemlock, Western Red Cedar, White Fir, Sitka Spruce Lumber

WESTERN WOOD PRODUCTS ASSOCIATION (WWPA)

WWPA-01	(1991; Supple No. 1) Western Lumber Grading Rules 91

1.2 GENERAL REQUIREMENTS

1.2.1 Site Plan

The Contractor shall prepare a site plan indicating the proposed location and dimensions of any area to be fenced and used by the Contractor, the number of trailers to be used, avenues of ingress/egress to the fenced area and details of the fence installation. Any areas which may have to be graveled to

prevent the tracking of mud shall also be identified. The Contractor shall also indicate if the use of a supplemental or other staging area is desired.

1.2.2 Identification of Employees

The Contractor shall be responsible for furnishing to each employee and for requiring each employee engaged on the work to display identification as approved and directed by the Contracting Officer. Prescribed identification shall immediately be delivered to the Contracting Officer for cancellation upon release of any employee. When required, the Contractor shall obtain and provide fingerprints of persons employed on the project. Contractor and subcontractor personnel shall wear identifying markings on hard hats clearly identifying the company for whom the employee works.

1.2.3 Employee Parking

Contractor employees shall park privately owned vehicles in an area designated by the Contracting Officer. This area will be within reasonable walking distance of the construction site. Contractor employee parking shall not interfere with existing and established parking requirements of the military installation.

1.3 BULLETIN BOARD, PROJECT SIGN, AND PROJECT SAFETY SIGN

1.3.1 Bulletin Board

Immediately upon beginning of work, the Contractor shall provide a weatherproof glass-covered bulletin board not less than 915 by 1220 mm (36 by 48 inches) in size for displaying the Equal Employment Opportunity poster, a copy of the wage decision contained in the contract, Wage Rate Information poster, and other information approved by the Contracting Officer. The bulletin board shall be located at the project site in a conspicuous place easily accessible to all employees, as approved by the Contracting Officer. Legible copies of the aforementioned data shall be displayed until work is completed. Upon completion of work the bulletin board shall be removed by and remain the property of the Contractor.

1.3.2 Project and Safety Signs

(A) General:

The Contractor shall construct and erect one project sign, one safety sign and a minimum of 1 hard hat signs at locations designated by the Contracting Officer. The signs shall conform to the requirements of the drawings attached at the end of this section. The signs shall be erected as soon as possible and within 15 days after date of commencement of work under this contract. The data required by the safety sign shall be corrected daily.

(B) Materials:

(1) Lumber shall conform to DOC PS 20 and grading rules of applicable grading agencies, WCLIB or WWPA. Grade shall be "Standard" or better Douglas Fir, S4S and shall be stamped S-Dry.

(2) Plywood: Plywood shall conform to DOC PS 1, Grade AC, Group 1, Exterior.

(3) Bolts, Nuts and Nails: Bolts and nuts shall be galvanized, and type, and size best suited for intended for use. Nails shall conform to ASTM F 547.

(4) Paint: Type of paint for primer, finish coats, and lettering, shall be as indicated on the attached standard drawing, Project Sign, paragraph PAINTING. The color of signs and lettering shall be as directed by the Contracting Officer. Safety signs shall be painted in the same colors as the project sign. Hard hat signs shall be painted as indicated on the attached drawing.

(5) Decals: Corps of Engineers castle decal and the hard hat decal called for on the signs will be furnished by the Government.

(C) Construction:

(1) Signs shall be constructed as detailed on attached drawings.

(2) Painting: All exposed surfaces and edges of plywood shall be given one coat of linseed oil and be wiped prior to applying primer. All exposed surfaces of signs and supports shall be given one coat of primer and one finish coat as indicated. All lettering shall be sized as indicated. Width of letter stroke shall be 1/6 of the letter height, except as noted.

(D) Maintenance and Disposal:

The Contractor shall maintain the signs in good condition throughout the life of the project. Signs shall remain the property of the Contractor and upon completion of the project they shall be removed from the site.

1.4 CONTRACTOR'S TEMPORARY FACILITIES

1.4.1 Administrative Field Offices

The Contractor shall provide and maintain administrative field office facilities within the construction area at the designated site. Government office and warehouse facilities will not be available to the Contractor's personnel.

1.4.2 Storage Area

The Contractor shall construct a temporary 1.8 meter (6 foot) high chain link fence around trailers and materials. The fence shall include plastic strip inserts, colored **green,** so that visibility through the fence is obstructed. Fence posts may be driven, in lieu of concrete bases, where soil conditions permit. Trailers, materials, or equipment shall not be placed or stored outside the fenced area unless such trailers, materials, or equipment are assigned a separate and distinct storage area by the Contracting Officer away from the vicinity of the construction site **but within the military boundaries.** Trailers, equipment, or materials shall not be open to public view with the exception of those items which are in support of ongoing work on any given day. Materials shall not be stockpiled outside the fence in preparation for the next day's work. At the end of each work day mobile equipment, such as tractors, wheeled lifting equipment, cranes, trucks, and like equipment, shall be parked within the fenced area.

1.4.3 Supplemental Storage Area

Upon Contractor's request, the Contracting Officer will designate another or supplemental area for the Contractor's use and storage of trailers, equipment, and materials. This area may not be in close proximity of the construction site but shall be within the military boundaries. Fencing of materials or equipment will not be required at this site; however, the Contractor shall be responsible for cleanliness and orderliness of the area used and for the security of any material or equipment stored in this area. Utilities will not be provided to this area by the Government.

1.4.4 Appearance of Trailers

Trailers utilized by the Contractor for administrative or material storage purposes shall present a clean and neat exterior appearance and shall be in a state of good repair. Trailers which, in the opinion of the Contracting Officer, require exterior painting or maintenance will not be allowed on **the military property.**

1.4.5 Maintenance of Storage Area

Fencing shall be kept in a state of good repair and proper alignment. Should the Contractor elect to traverse with construction equipment or other vehicles grassed or unpaved areas which are not established roadways, such areas shall be covered with a layer of gravel as necessary to prevent rutting and the tracking of mud onto paved or established roadways; gravel gradation shall be at the Contractor's discretion. Grass located within the boundaries of the construction site shall be mowed for the duration of the project. Grass and vegetation along fences, buildings, under trailers, and in areas not accessible to mowers shall be edged or trimmed neatly.

1.4.6 Security Provisions

Adequate outside security lighting shall be provided at the Contractor's temporary facilities. The Contractor shall be responsible for the security of its own equipment; in addition, the Contractor shall notify the appropriate law enforcement agency requesting periodic security checks of the temporary project field office.

1.5 TEMPORARY PROJECT SAFETY FENCING

As soon as practicable, but not later than 15 days after the date established for commencement of work, the Contractor shall furnish and erect temporary project safety fencing at the work site. The safety fencing shall be a high visibility orange colored, high density polyethylene grid or approved equal, a minimum of 1.07 meters (42 inches) high, supported and tightly secured to steel posts located on maximum 3 meters (10 foot) centers, constructed at the approved location. The safety fencing shall be maintained by the Contractor during the life of the contract and, upon completion and acceptance of the work, shall become the property of the Contractor and shall be removed from the work site.

1.6 HOUSEKEEPING AND CLEANUP:

Pursuant to the requirements of paragraph, CLEANING UP and paragraph, ACCIDENT PREVENTION, of the CONTRACT CLAUSES, Section 00700, the Contractor shall assign sufficient personnel to insure strict compliance. The Contractor shall submit a detailed written plan for implementation of this requirement. The plan will be presented as part of the preconstruction safety plan and will provide for keeping the total construction site, structures and accessways

free of debris and obstructions at all times. Work will not be allowed in those areas that, in the opinion of the Contracting Officer's representative, have unsatisfactory cleanup and housekeeping at the end of the preceding day's normal work shift. At least once each day all areas shall be checked by the Quality Control person of the Prime Contractor and the findings recorded on the Quality Control Daily Report. In addition, the Quality Control person will take immediate action to insure compliance with this requirement. Housekeeping and cleanup shall be assigned by the Contractor to specific personnel. The name(s) of the personnel shall be available at the project site; each person will be supplied with a distinctively marked hard hat, to be worn from the beginning to the end of the project.

1.7 RESTORATION OF STORAGE AREA

Upon completion of the project and after removal of trailers, materials, and equipment from within the fenced area, the fence shall be removed and will become the property of the Contractor. Areas used by the Contractor for the storage of equipment or material, or other use, shall be restored to the original or better condition. Gravel used to traverse grassed areas shall be removed and the area restored to its original condition, including top soil and seeding as necessary.

PART 2 PRODUCTS (NOT APPLICABLE)

PART 3 EXECUTION (NOT APPLICABLE)

-- End of Section --

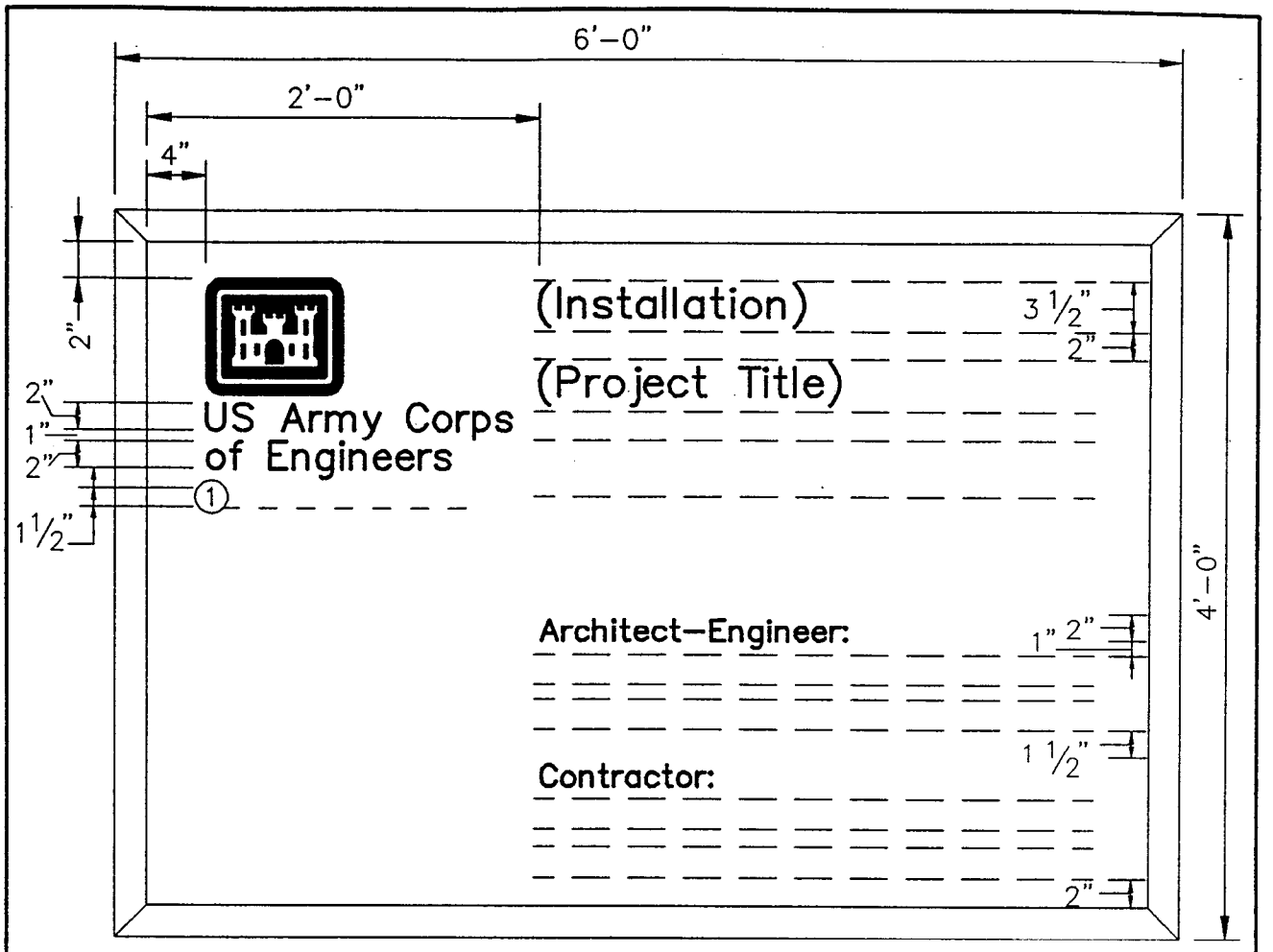

(1) "[insert construction district name] DISTRICT"

SIGN MATERIALS

POST 4" X 4" X 3/4" EXTERIOR PLYWOOD 4'-0" X 6'-0" X 1"X2" FRAMING WITH MITERED CORNERS. EDGES OF PLYWOOD SHALL BE SEALED PRIOR TO PAINTING.

PAINTING

COLORS SHALL BE AS DIRECTED BY THE CONTRACTING OFFICER. ALL SURFACES SHALL BE GIVEN ONE COAT OF EXTERIOR PAINT MEETING FS TT-E-2784, TYPE III, (FLAT) AND ONE COAT OF EXTERIOR ENAMEL PAINT MEETING FS TT-E-2784, TYPE II (SEMI-GLOSS). ALL PAINTED LETTERING SHALL BE EXTERIOR PAINT MEETING FS TT-E-2784, TYPE II (SEMI-GLOSS). THE CASTLE INSIGNIA WILL BE FURNISHED BY THE GOVERNMENT IN PRESSURE SENSITIVE VINYL FOR AFFIXING BY THE CONTRACTOR.

LETTERING

ALL LETTERING IS TO BE HELVETICA BOLD OR HELVETICA MEDIUM. LETTERING SIZES SHALL BE DETERMINED BY THE AMOUNT OF INFORMATION TO BE PRINTED ON THE SIGN, NO LETTERING HEIGHT SHALL EXCEED THE SIZE SPECIFIED. ALL INFORMATION IS TO BE LAID OUT AS SHOWN.

PROJECT SIGN

STANDARD DETAIL
PROJECT SIGN
U S ARMY
U S ARMY ENGINEER DISTRICT
SACRAMENTO

Drawn T. Tufts — Not to Scale
Checked R. Simmons — NOVEMBER 1993
File No. 150-25-1186

ACAD DRAWING: SIGN1186.DWG 2 NOV. 93

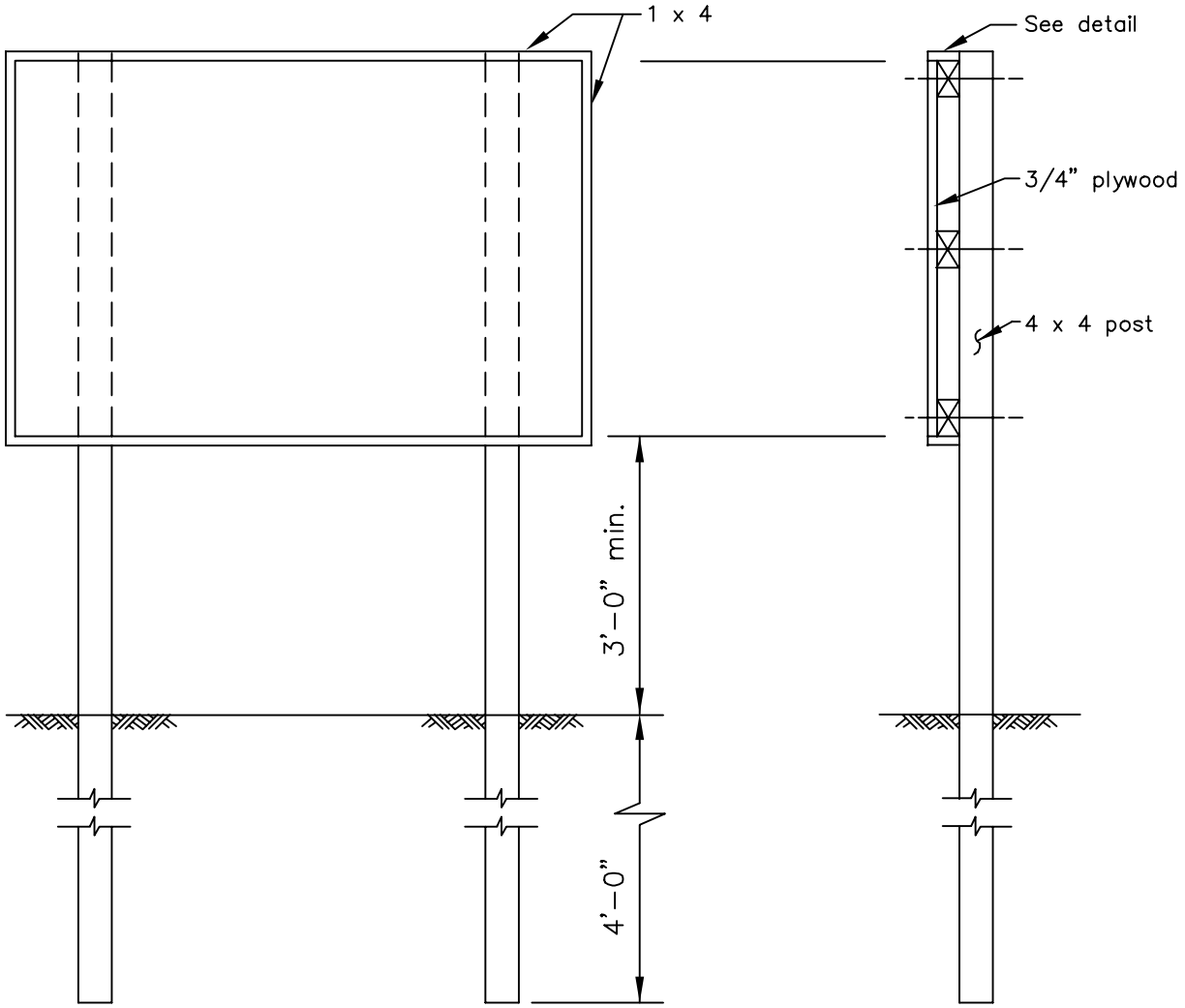

ELEVATION

SECTION

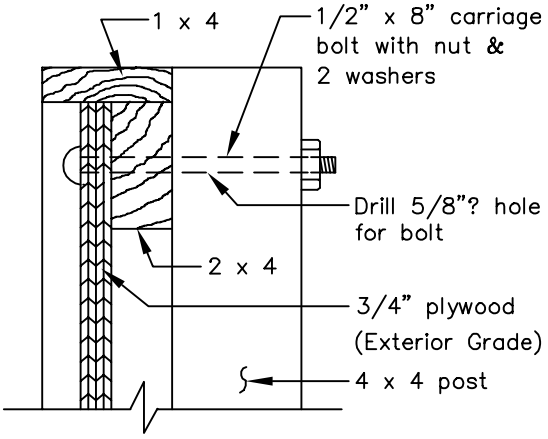

DETAIL

GENERAL NOTES:

1. Lumber to be cut & formed accurately.
2. Secure 1 x 4 and plywood with 6d finish nails at not less than 12" O.C.
3. All exposed nails to be set & holes filled with putty.
4. Sign to be set in good solid ground & backfill carefully tamped into place.
5. Where necessary posts shall be braced to provide a solid installation.
6. Paint primer (Fed. Spec. TT-P-25)
   Paint primer (Fed. Spec. TT-E-529)

STANDARD DETAIL

SIGN DETAILS

U.S. ARMY ENGINEER DISTRICT
SACRAMENTO

Drawn M.Koenig — Not to Scale
Checked R. Simmons — 1987
File No. 150-25-1232

ACAD Drawing SIGN1232.DWG 198

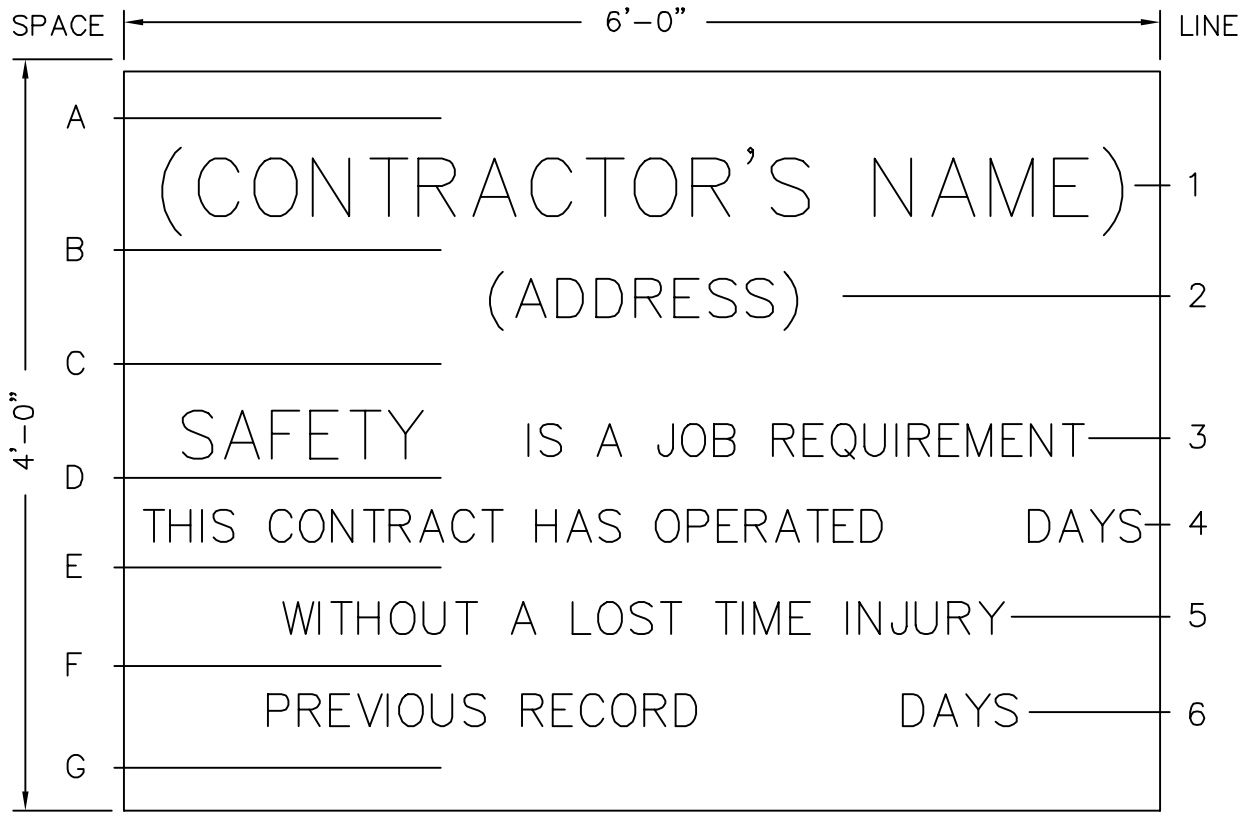

SCHEDULE

SPACE	HEIGHT	LINE	DESCRIPTION	LETTER HEIGHT
A	5"			
		1	CONTRACTOR'S NAME	5"
B	3"			
		2	ADDRESS	3"
C	6"			
		3	SAFETY IS A JOB REQUIREMENT	4 1/2" & 3"
D	3"			
		4	ALL LETTERING	3"
E	3"			
		5	ALL LETTERING	3"
F	3"			
		6	ALL LETTERING	3"
G	5"			

NOTE:

LETTERING SHALL BE BLACK No. 27038, FEDERAL STANDARD 595A.
SIGN SHALL BE INSTALLED IN THE SAME MANNER
AS THE PROJECT SIGN.

STANDARD DETAIL

SAFETY SIGN

U S ARMY ENGINEER DISTRICT
SACRAMENTO

Drawn T. Tufts Not to Scale
Checked R. Simmons AUG. 1988
File number 80-25-707

ACAD DRAWING: SIGN 707 DWG. 9, DEC. 88

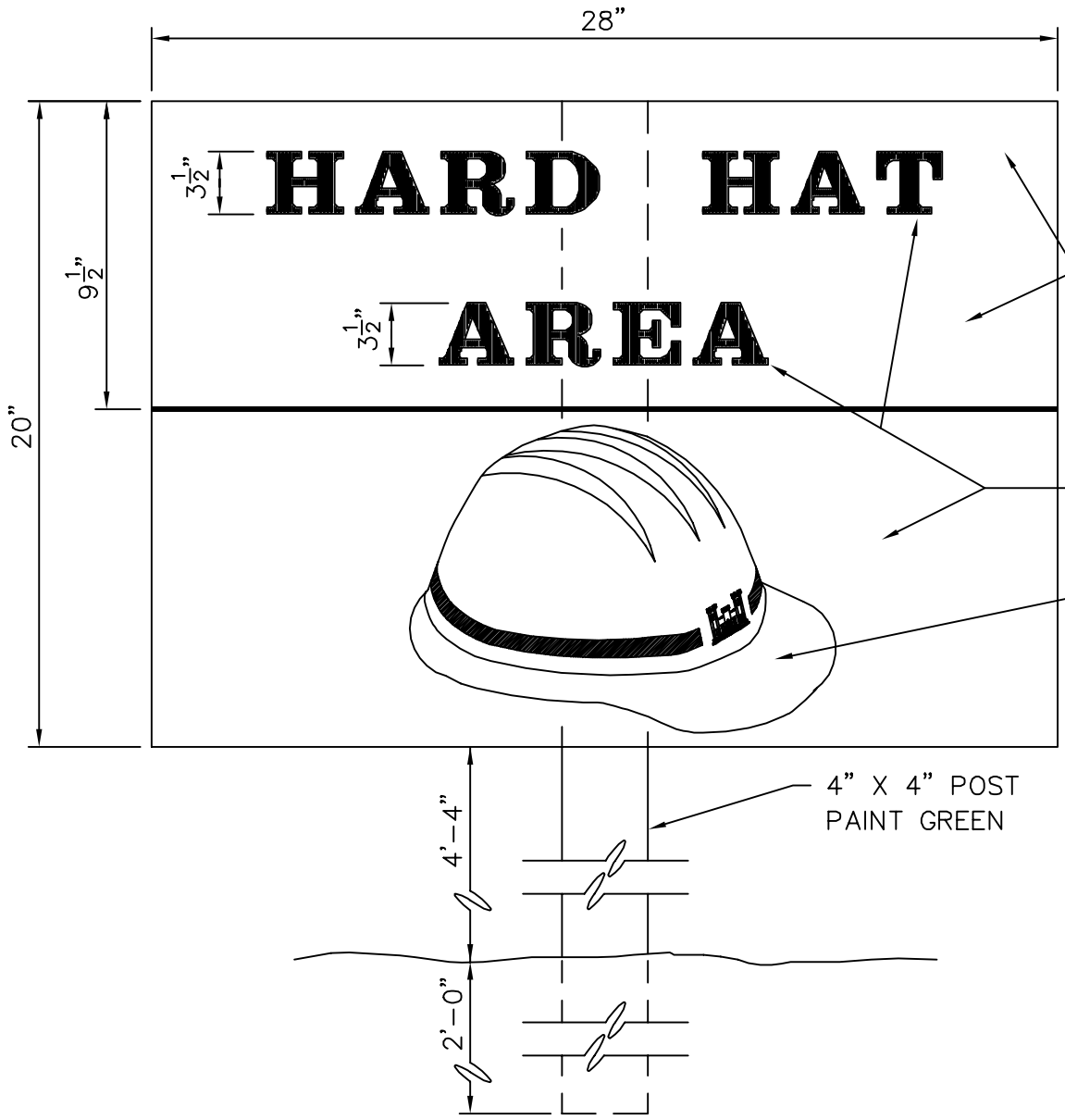

GENERAL NOTES:

1. Green & White Paint shall be opaque glossy as specified in ANSI Z535.1

2. Bolt Sign to post w/$2\frac{1}{2}$" dia. Carriage Bolts.

STANDARD DETAIL

HARD HAT SIGN

U.S. ARMY ENGINEER DISTRICT
SACRAMENTO

Drawn T. Tufts — Not to Scale
Checked R. Simmons — JAN. 1996
File No. 80-25-774

ACAD DRAWING: SIGN774 DWG. 31, JAN. 96

INDEX

SECTION 01505

GENERAL REQUIREMENTS

PARAGRAPH		PAGE
PART 1	GENERAL	1
1.1	SCRAP MATERIAL	1
1.2	WRITTEN GUARANTEES AND GUARANTOR'S LOCAL REPRESENTATIVE	1
1.3	PRICING OF CONTRACTOR-FURNISHED PROPERTY	1
1.4	TEMPORARY ELECTRIC WIRING	1
1.5	UTILITIES NOT SHOWN	2
1.6	GENERAL SAFETY REQUIREMENTS	2
1.7	PLANNED UTILITY OUTAGES AND STREET CLOSURES	4
1.8	EXCAVATION PERMITS	5
1.9	TIME EXTENSIONS FOR UNUSUALLY SEVERE WEATHER	5
1.10	EQUIPMENT OWNERSHIP AND OPERATING EXPENSE SCHEDULE	6
1.11	EQUIPMENT DATA FORM	6
1.12	SPECIAL CONSTRUCTION AND SECURITY PROCEDURES	6
1.13	SOIL DENSITY TEST (USING METERS CONTAINING RADIOACTIVE MATERIALS)	8
PART 2	PRODUCTS (NOT APPLICABLE)	8
PART 3	EXECUTION (NOT APPLICABLE)	8

SECTION 01505

GENERAL REQUIREMENTS

PART 1 GENERAL

1.1 SCRAP MATERIAL

Materials specified to be removed and become the property of the Contractor are designated as scrap, and the Contractor, by signing this contract, hereby acknowledges that he has made due allowance for value, if any, of such scrap in the contract price.

1.2 WRITTEN GUARANTEES AND GUARANTOR'S LOCAL REPRESENTATIVE:

Prior to completion of the contract, the Contractor shall obtain and furnish to the Contracting Officer's representative written guarantees for all the equipment and/or appliances furnished under the contract. The Contractor shall furnish with each guarantee: The name, address, and telephone number of the guarantor's representative nearest to the location where the equipment and/or appliances are installed, who, upon request of the Using Service's representative, will honor the guarantee during the guaranty period and will provide the services prescribed by the terms of the guarantee.

1.3 PRICING OF CONTRACTOR-FURNISHED PROPERTY:

At the request of the Contracting Officer, the Contractor shall promptly furnish and shall cause any subcontractors to furnish, in like manner, unit prices and descriptive data required by the Government for property record purposes of fixtures and equipment furnished and installed by the Contractor.

1.4 TEMPORARY ELECTRIC WIRING:

(A) Temporary Power and Lighting:

The Contractor shall provide construction power facilities in accordance with the safety requirements of the National Electrical Code NFPA No. 70 and the SAFETY AND HEALTH REQUIREMENTS MANUAL EM 385-1-1. The Contractor, or his delegated subcontractor, shall enforce all the safety requirements of electrical extensions for the work of all subcontractors. All work shall be accomplished by skilled electrical tradesmen in a workmanlike manner, as approved by the Contracting Officer.

(B) Construction Equipment:

In addition to the requirements of EM 385-1-1, SAFETY AND HEALTH REQUIREMENTS MANUAL, all temporary wiring conductors installed for operation of construction tools and equipment shall be either Type TW or THW contained in metal raceways, or may be multiconductor cord. Temporary wiring shall be secured above the ground or floor in a workmanlike manner and shall not present an obstacle to persons or equipment. Open wiring may only be used outside of buildings, and then only in strict accordance with the provisions of the National Electrical Code.

(C) Circuit Protection:

In addition to the present requirements in EM 385-1-1 and the National Electrical Code, all 15 and 20-ampere receptacle outlets used for obtaining power during construction shall have ground fault circuit interrupters (GFCI) for personnel protection. Block and brick saws shall also be equipped with GFCI. The Contracting Officer may allow an exception to this requirement for circuits for concrete vibrators or circuits operating at other than 60 Hertz normal (in both cases an assured grounding program as described in the National Electrical Code, except utilizing the daily inspection frequency of the grounding means of such equipment, may be permitted). The assured grounding program will not be permitted as a substitute for usage of GFCI'S except as described above. All generator-powered 15- and 20-ampere, 60 Hertz receptacle outlets shall have GFCI'S, and shall be properly grounded. A testing means shall be provided which will impose a measured fault of 5 milliamperes, plus or minus 1 milliamperes, and result in tripping the GFCI unit.

1.5 UTILITIES NOT SHOWN:

If the Contractor encounters, within the construction limits of the entire project, utilities not shown on the plans and not visible as to the date of this contract and such utilities will interfere with construction operations, he shall immediately notify the Contracting Officer in writing to enable a determination by the Contracting Officer as to the necessity for removal or relocation. If such utilities are removed or relocated as directed by the Contracting Officer, the Contractor shall be entitled to equitable adjustment for any additional pertinent work or delay.

1.6 GENERAL SAFETY REQUIREMENTS:

(A) General:

The Corps of Engineers Safety and Health Requirements Manual, EM 385-1-1, (see Contract Clauses, Section 00700, ACCIDENT PREVENTION) and the Occupational Safety and Health Act (OSHA) Standards for Construction (Title 29, Code of Federal Regulations Part 1926 as revised from time to time); General Industry Standards (Title 29, Code of Federal Regulations Part 1910 as revised from time to time); and the National Fire Protection Association Codes are applicable to this contract. In case of conflict the most stringent requirement of the standards is applicable.

(B) The Prime Contractor's superintendent

The Prime Contractor's superintendent shall take an active role in enforcing the safety requirements by participation in safety conferences, hazard analysis (see below), tool box meetings, walk-through inspections, correction of violations, etc., and including that of the subcontractor's work.

(C) Job Hazard Analysis:

Based on the construction schedule, the Contractor shall submit a job hazard analysis of each major phase of work prior to entering that phase of activity. The analysis shall include major or high risk hazards, as well as commonly recurring deficiencies that might possibly be encountered for that operation, and shall identify proposed methods and techniques of accomplishing each phase in a safe manner. The Prime Contractor's superintendent shall take active participation in the Job Hazard Analysis, including the subcontractors' work. Prior to start of actual work a meeting shall be held with Prime Contractor, Government, and affected subcontractor to review the Job Hazard

Analysis. In addition, job site meetings shall be held to indoctrinate foreman and workers on details of this analysis.

(D) Violations:

If recurring violations and/or gross violation indicate that the safety performance is unsatisfactory, corrective action shall be taken as directed, and at the discretion of the Contracting Officer the retention or some part thereof will be withheld from the progress payment until corrective action has been completed.

(E) Elevated Work Areas:

Workers in elevated work areas in excess of 6 feet above an adjoining surface require special safety attention. In addition to the provisions of EM 385-1-1, the following safety measures are required to be submitted to the Contracting Officer's Representative. Prior to commencement of work in elevated work areas, the Contractor shall submit drawings depicting all provisions of his positive protection system including, but not limited to, all details of guard rails.

(1) Positive protection for workmen engaged in the installation of structural steel and steel joists shall be provided by safety nets, tie-off's, hydraulic man lifts, scaffolds, or other required means. Decking crews must be tied-off or work over nets or platforms not over 6 feet below the work area. Walking on beams and/or girders and the climbing of columns is prohibited without positive protection.

(2) Perimeter guard rails shall be installed at floor, roof, or wall openings more than 6 feet above an adjoining surface and on roof perimeters. Rails shall be designed to protect all phases of elevated work including, but not limited to, roofing operations and installation of gutters and flashing. Rails around roofs may not be removed until all work on the roof is complete and all traffic on or across the roof ceases. Rails shall be designed by a licensed engineer to provide adequate stability under any anticipated impact loading. As a minimum, the rails shall consist of a top rail at a height of 42 inches, a mid rail and a toe board. Use of tie-offs, hydraulic man lifts, scaffolds, or other means of roof edge protection methods may be utilized on small structures such as family housing, prefabricated metal buildings, etc.

(F) Fire Prevention:

Twenty-four hours notice shall be given to the Contracting Officer for coordination with the Facility Fire Department prior to conducting any fire hazardous operation. Cutting or welding will be permitted only in areas that are or have been made fire safe. Where possible, all combustibles shall be located at least 35 feet horizontally from the work site. Where such location is impracticable, combustibles shall be protected with fire blankets and/or protective welding screens to prevent slag from running out of the work area. Edges of covers at the floor shall be tight to prevent sparks from going under them. This precaution is also important at overlaps where several covers are used to protect a large pile. The Contractor shall not allow any welding/cutting or open flame operations in facilities that are protected by a wet pipe fire sprinkler or an automatic detection system, if the system is out of service. First priority of work will be to return the suppression/detection system to operational condition. Return the fire detection and/or suppression system back to an operational status (if possible) during periods that the facility is unoccupied, and at the end of

the work day. The Contractor shall post a fire guard for a 24 hour period (or certify to the Fire Department that the facility is safe) after welding, cutting, and open flame operations in a facility when: (a) fire detection and suppression system can not be returned to service; (b) fire detection or suppression systems do not exist. Other fire prevention precautions shall be in accordance with the latest National Fire Codes.

(G) Recordkeeping/Reporting Requirements:

On all contract operations, the Prime Contractor shall be responsible for recording and reporting all accident exposure and experience incident work. (This includes exposure and experience of the prime contractor and his/her sub-contractor(s)). As a minimum these records shall include exposure work-hours and a log of occupational injuries and illnesses. (OSHA Form 200 or state equivalent as prescribed by 29 CFR 1904.5) Reference EM 385-1-1, 01.D.04.

(H) Accident Reporting:

In addition to the requirements for reporting accidents in accordance with EM 385-1-1, Section 1, the Prime Contractor will submit at the 50% point and 100% of project completion, a written summary of worker's compensation claims filed by workers on the project. The report will include all subcontractors. The main report covering the Prime Contractor claims will be certified as "correct and true" by the Contractor's compensation insurance carrier. The same certification will be required for subcontractor reports.

1.7 PLANNED UTILITY OUTAGES AND STREET CLOSURES:

All utility outages and street closures shall be of as short a duration as possible and shall be scheduled as far in advance as possible with the Contracting Officer, in no case less than (14) days before the outage or closure. The Contractor shall obtain in writing from the Contracting Officer a statement or schedule giving the permissible times of outages or closures for particular installations and the maximum time allowed for each. The Contractor shall strictly observe such schedules and will be held responsible for any violations.

1.8 EXCAVATION PERMITS:

All excavation permits will be issued to the Contractor from the Directorate of Engineering and Housing (DEH), through the Contracting Officer. The appropriate form, for this request, may be obtained from the Contracting Officer. Processing time required is 14 calendar days. Questions concerning the excavation permit should be directed to the Contracting Officer.

1.9 TIME EXTENSIONS FOR UNUSUALLY SEVERE WEATHER:

(A) This provision specifies the procedure for the determination of time extensions for unusually severe weather in accordance with the CONTRACT CLAUSE, Section 00700, entitled "DEFAULT (FIXED-PRICE CONSTRUCTION)". In order for the Contracting Officer to award a time extension under this clause, the following conditions must be satisfied:

(1) The weather experienced at the project site during the contract period must be found to be unusually severe, that is, more severe than the adverse weather anticipated for the project location during any given month.

(2) The unusually severe weather must actually cause a delay to the completion of the project. The delay must be beyond the control and without the fault or negligence of the Contractor.

(B) The following schedule of monthly anticipated adverse weather delays is based on National Oceanic and Atmospheric Administration (NOAA) or similar data for the project location and will constitute the base line for monthly weather time evaluations. The Contractor's progress schedule must reflect these anticipated adverse weather delays in all weather dependent activities.

MONTHLY ANTICIPATED ADVERSE WEATHER DELAY
WORK DAYS BASED ON (5) DAY WORK WEEK

JAN	FEB	MAR	APR	MAY	JUN	JUL	AUG	SEP	OCT	NOV	DEC
(20)	(16)	(14)	(08)	(05)	(03)	(02)	(02)	(02)	(05)	(13)	(21)

(C) Upon acknowledgement of the Notice to Proceed (NTP) and continuing throughout the contract, the Contractor will record on the daily CQC report, the occurrence of adverse weather and resultant impact to normally scheduled work. Actual adverse weather delay days must prevent work on critical activities for 50 percent or more of the Contractor's scheduled work day. (ER 415-1-15, 31 OCT 89)

1.10 EQUIPMENT OWNERSHIP AND OPERATING EXPENSE SCHEDULE

(A) Allowable cost for construction and marine plant and equipment in sound workable condition owned or controlled and furnished by a Contractor or subcontractor at any tier shall be based on actual cost data when the Government can determine both ownership and operating costs for each piece of equipment or equipment groups of similar serial and series from the Contractor's accounting records. When both ownership and operating costs cannot be determined from the Contractor's accounting records, equipment costs shall be based upon the applicable provisions of EP 1110-1-8, "Construction Equipment Ownership and Operating Expense Schedule", Region VII. Working conditions shall be considered to be average for determining equipment rates using the schedule unless specified otherwise by the Contracting Officer. For equipment not included in the schedule, rates for comparable pieces of equipment may be used or a rate may be developed using the formula provided in the schedule. For forward pricing, the schedule in effect at the time of negotiations shall apply. For retrospective pricing, the schedule in effect at the time the work was performed shall apply.

(B) Equipment rental costs are allowable, subject to the provisions of FAR 31.105(d)(ii) and FAR 31.205-36 substantiated by certified copies of paid invoices. Rates for equipment rented from an organization under common control, lease-purchase or sale-leaseback arrangements will be determined using the schedule except that rental costs leased from an organization under common control that has an established practice of leasing the same or similar equipment to unaffiliated leasees are allowable. Costs for major repairs or overhaul are unallowable.

(C) When actual equipment costs are proposed and the total amount of the pricing action is over $25,000, cost or pricing data shall be submitted on Standard Form 1411, "Contract Pricing Proposal Cover Sheet". By submitting cost or pricing data, the Contractor grants to the Contracting Officer or an authorizing representative the right to examine those books, records, documents and other supporting data that will permit evaluation of the

proposed equipment costs. After price agreement, the Contractor shall certify that the equipment costs or pricing data submitted are accurate, complete and current.

1.11 EQUIPMENT DATA FORM

In conjunction with paragraph, EQUIPMENT OWNERSHIP AND OPERATING EXPENSE SCHEDULE, above the Contractor shall furnish SPK Form 450 for all necessary equipment to perform work requiring adjustment of contract price and shall submit these forms with the modification proposals. A sample form is at the end of this section.

1.12 SPECIAL CONSTRUCTION AND SECURITY PROCEDURES:

(A) Work Schedule:

(1) The Contractor shall perform the work required on this project within the normal hours of the work week at Tooele Army Depot. The work week at Tooele Army Depot is Monday through Thursday, with normal hours from 6:30 am to 5:00 pm. The Contractor is responsible for making an evaluation of this required four (4) day, forty (40) hour work week and include this requirement in the preparation of his bid/offer. The Contractor's progress schedule shall reflect this requirement for a four (4) day, forty (40) hour work week. Any work that the Contractor wishes to perform outside of these hours must have prior approval from the Contracting Officer's Representative. The Contractor shall obtain this approval by submitting a written request to the Contracting Officer's Representative no later than seven (7) working days in advance of the dates requested by the Contractor.

(2) The Communications Office shall be notified at least 24 hours before excavation activities are started. The Contractor shall make sure all lines are located before excavation commences.

(3) Construction vehicles entering the Depot shall pass a safety inspection.

(4) Vehicles entering the Depot shall be insured and licensed.

(5) Admittance to the Work Site: The Contractor is solely responsible for all acts committed by persons admitted to the Government work site at the request of the Contractor.

(B) Security Procedures:

(1) All Contractor employees shall be U.S. citizens.

(2) Foreign Nationals: Army regulations prohibit foreign nationals from entering Army installations without prior written approval from the installation's commander. Requests for foreign national employees to enter the depot shall be submitted for approval to the Director of Law Enforcement and Security at least 14 days prior to the desired date of employment. Such requests shall be fully justified and will be considered on a case-by-case basis.

(3) Initial and subsequent issuance of access badge for all Contractor personnel.

(4) Citations can be issued by Depot security guards. Violators may have to appear in magistrate court in answer to a citation.

(5) Drivers shall carry a valid driver's license.

(6) Equipment: All mobile equipment (e.g., trucks, forklifts) shall be secured after normal duty hours. Commercial type vehicles shall have the ignition key removed and the doors locked and windows rolled up.

(7) Property Pass: Contractor/subcontractor personnel hauling material/equipment into or out of Tooele Army Depot shall have in their possession a valid DA Form 1818, Individual Property Pass, signed by an authorized representative of Facilities Engineering Division or the Tooele Army Depot supervisor assigned to the project. Incoming material listed on a purchase order from the Contractor will be sufficient to allow the material onto the depot.

(8) Vehicle/Package Inspection Program: All vehicles/packages entering onto, within the confines of, or departing Tooele Army Depot are subject to inspection by authorized security personnel.

(9) Any questions pertaining to security operations/regulations should be directed to Mr. Warren Stewart or Ms. Nicole Higgins, Ext. 2559/2568.

1.13 SOIL DENSITY TEST (USING METERS CONTAINING RADIOACTIVE MATERIALS):

(A) Nuclear methods are not acceptable for soil and soil-aggregate density tests required by this contract except as stated in DIVISION 2. Testing for official results shall be conducted as specified in DIVISION 2 of this contract. If the Contractor proposes to use meters containing radioactive materials to obtain unofficial results for his own convenience, the Contractor shall adhere to the following requirements:

(B) In accordance with 06.E of EM 385-1-1, Safety and Health Requirements Manual, the Contractor shall obtain a service permit to use, store, operate, or handle a radiation producing machine or radioactive materials on a Department of Defense (DoD) Installation. The service permit shall be obtained from the appropriate U.S. Army Command through the Contracting Officer's Representative. The Contractor should notify the Contracting Officer during the pre-work conference if a radiation producing device will be utilized on a DoD Installation in order to determine the permit application requirements, and allow a lead time of 45 days for obtaining a permit.

(C) The Contractor is responsible for providing a copy of any Nuclear Regulatory Commission (NRC) licenses per the Code of Federal Regulations 10 CFR "Energy" for all radioactive sources brought onto the DoD installation by the Contractor and/or subcontractors. These licenses shall be provided to the Contracting Officer's Representative, before the radioactive sources is allowed on the DoD installation.

PART 2 PRODUCTS (NOT APPLICABLE)

PART 3 EXECUTION (NOT APPLICABLE)

-- End of Section --

CONTRACTOR EQUIPMENT DATA SHEET *(Data to be furnished by Contractor for all equipment to be used on modifications as required under the special provisions of the contract.)*

DATE

CONTRACTOR

CONTRACT NUMBER

1. EQUIPMENT DESCRIPTION _____

2. MODEL AND SERIES _____

3. YEAR PURCHASED _____

4. PURCHASED PRICE AT YEAR PURCHASE _____

5. LIST PRICE YEAR OF MANUFACTURE _____

6. YEAR MANUFACTURED _____

7. EQUIPMENT HORSEPOWER _____

8. CARRIER HORSEPOWER _____

9. FUEL TYPE _____

10. SHIPPING WEIGHT _____

11. TIRE SIZE: FRONT - _____ DRIVE - _____ TRAILING - _____

REMARKS:

SECTION TABLE OF CONTENTS

DIVISION 02 - SITE WORK

SECTION 02050

DEMOLITION

PART 1 GENERAL

1.1 REFERENCES
1.2 GENERAL REQUIREMENTS
1.3 SUBMITTALS
1.4 DUST CONTROL
1.5 PROTECTION
1.5.1 Protection of Personnel
1.5.2 Protection of Existing Property
1.5.3 Protection of Trees
1.5.4 Environmental Protection
1.6 BURNING
1.7 USE OF EXPLOSIVES

PART 2 PRODUCTS (Not Applicable)

PART 3 EXECUTION

3.1 EXISTING STRUCTURES
3.2 UTILITIES
3.3 DISPOSITION OF MATERIAL
3.3.1 Unsalvageable Material
3.4 CLEAN UP

-- End of Section Table of Contents --

SECTION 02050

DEMOLITION

PART 1 GENERAL

1.1 REFERENCES

The publications listed below form a part of this specification to the extent referenced. The publications are referred to in the text by basic designation only.

ENGINEERING MANUALS (EM)

EM 385-1-1	(1992) U.S. Army Corps of Engineers Safety and Health Requirements Manual

1.2 GENERAL REQUIREMENTS

The work includes demolition, salvage of identified items and materials, and removal of resulting rubbish and debris. Rubbish and debris shall be removed from Government property daily, unless otherwise directed, to avoid accumulation at the demolition site. Materials that cannot be removed daily shall be stored in areas specified by the Contracting Officer. In the interest of occupational safety and health, the work shall be performed in accordance with EM 385-1-1, Section 23, Demolition, and other applicable Sections. In the interest of conservation, salvage shall be pursued to the maximum extent possible; salvaged items and materials shall be disposed of as specified.

1.3 SUBMITTALS

Government approval is required for submittals with a "GA" designation; submittals having an "FIO" designation are for information only. The following shall be submitted in accordance with Section 01330 SUBMITTAL PROCEDURES:

SD-08 Statements

Work Plan; FIO.

The procedures proposed for the accomplishment of the work. The procedures shall provide for safe conduct of the work, including procedures and methods to provide necessary supports, lateral bracing and shoring when required, careful removal and disposition of materials specified to be salvaged, protection of property which is to remain undisturbed, coordination with other work in progress, and timely disconnection of utility services. The procedures shall include a detailed description of the methods and equipment to be used for each operation, and the sequence of operations in accordance with EM 385-1-1.

1.4 DUST CONTROL

The amount of dust resulting from demolition shall be controlled to prevent the spread of dust to occupied portions of the construction site and to

avoid creation of a nuisance in the surrounding area. Use of water will not be permitted when it will result in, or create, hazardous or objectionable conditions such as ice, flooding and pollution.

1.5 PROTECTION

1.5.1 Protection of Personnel

During the demolition work the Contractor shall continuously evaluate the condition of the structure being demolished and take immediate action to protect all personnel working in and around the demolition site. No area, section, or component of floors, roofs, walls, columns, pilasters, or other structural element will be allowed to be left standing without sufficient bracing, shoring, or lateral support to prevent collapse or failure while workmen remove debris or perform other work in the immediate area.

Floors, roofs, walls, columns, pilasters, and other structural components that are designed and constructed to stand without lateral support or shoring, and are determined to be in stable condition, may be allowed to remain standing without additional bracing, shoring, of lateral support until demolished. The Contractor shall ensure that no elements determined to be unstable are left unsupported and shall be responsible for placing and securing bracing, shoring, or lateral supports as may be required as a result of any cutting, removal, or demolition work performed under this contract.

1.5.2 Protection of Existing Property

Before beginning any demolition work, the Contractor shall survey the site and examine the drawings and specifications to determine the extent of the work. The Contractor shall take necessary precautions to avoid damage to existing items to remain in place, to be reused, or to remain the property of the Government; any damaged items shall be repaired or replaced as approved by the Contracting Officer. The Contractor shall coordinate the work of this section with all other work and shall construct and maintain shoring, bracing, and supports as required. The Contractor shall ensure that structural elements are not overloaded and shall be responsible for increasing structural supports or adding new supports as may be required as a result of any cutting, removal, or demolition work performed under this contract.

1.5.3 Protection of Trees

Trees within the project site which might be damaged during demolition and which are indicated to be left in place shall be protected by a 1.83 m (6 foot) high fence. The fence shall be securely erected a minimum of 1.5 m from the trunk of individual trees or follow the outer perimeter of branches or clumps of trees. Any tree designated to remain that is damaged during the work under this contract shall be replaced in kind or as approved by the Contracting Officer.

1.5.4 Environmental Protection

The work shall comply with the requirements of Section 01410.

1.6 BURNING

The use of burning at the project site for the disposal of refuse and debris will not be permitted.

1.7 USE OF EXPLOSIVES

Use of explosives will not be permitted.

PART 2 PRODUCTS (Not Applicable)

PART 3 EXECUTION

3.1 EXISTING STRUCTURES

Existing structures indicated shall be removed to grade . All foundations shall be removed and excavation filled to grade..

3.2 UTILITIES

Existing utilities shall be removed as indicated. When utility lines are encountered that are not indicated on the drawings, the Contracting Officer shall be notified prior to further work in that area.

3.3 DISPOSITION OF MATERIAL

Title to material and equipment to be demolished, except Government salvage and historical items, is vested in the Contractor upon receipt of notice to proceed. The Government will not be responsible for the condition, loss or damage to such property after notice to proceed.

3.3.1 Unsalvageable Material

Concrete, masonry, and other noncombustible material, except concrete permitted to remain in place, shall be disposed of off site at the contractors expense.

3.4 CLEAN UP

Debris shall be removed and transported in a manner that prevents spillage on streets or adjacent areas. Local regulations regarding hauling and disposal shall apply.

-- End of Section --

INDEX
02052

RENOVATION REQUIREMENTS FOR STRUCTURES
CONTAINING LEAD-BASED PAINT

PART 1 GENERAL 02052-1

1.1 SCOPE OF WORK 02052-1

1.2 REFERENCES 02052-1

1.3 DEFINTIONS 02052-2

1.4 SUBMITTALS 02052-3

PART 2 PRODUCTS - Not Used 02052-5

PART 3 EXECUTION 02052-5

3.1 AIR SAMPLING REQUIREMENTS 02052-5

3.2 MEDICAL SURVEILLANCE 02052-6

3.3 TRAINING 02052-7

3.4 ENGINEERING CONTROLS 02052-7

3.5 ADMINISTRATIVE CONTROLS 02052-8

3.6 RESPIRATORY PROTECTION PROGRAM 02052-8

3.7 PERSONAL PROTECTIVE CLOTHING 02052-8

3.8 DECONTAMINATION PROCEDURES 02052-9

3.9 WORK PRACTICE CONTROLS 02052-9

3.10 CLEAN-UP AND DISPOSAL 02052-9

SECTION 02052

RENOVATION REQUIREMENTS FOR STRUCTURES CONTAINING LEAD-BASED PAINT

PART 1 GENERAL

1.1 SCOPE OF WORK

This section is applicable to the [renovation/demolition] of buildings containing lead-based paint. Portions of the paint in [Bldg, Site], are known to contain up to [-----] mg/kg lead. The Contractor shall implement this section to protect the worker, the environment, and the surrounding community from the potential hazards associated with lead-based paint. [Some of the requirements of this specification, such as submittals of plans, programs and personnel, are duplicated in Section 02080, Asbestos; however, the intent is that those duplicated requirements be met by a single submittal.]

[Although this section does not require lead-based paint abatement, the Contractor shall strip all surfaces covered with toxic preservatives, including coatings which generate toxic substances upon heating for a distance of at least four inches (4") from the area of heat application before welding, cutting or brazing on such surfaces.]

[The Contractor shall HEPA vacuum and/or wet scrape all peeling and flaking paint from the substrate. The removed paint chips shall be packaged in properly labeled lined DOT-acceptable containers for disposal. Testing of the material shall be in accordance with disposal facility requirements. Costs for testing and disposal shall be borne by the Contractor.]

1.2 REFERENCES

The publications listed below form a part of this specification to the extent referenced. The publications are referred to in the text by basic designation only.

1.2.1 U. S. ARMY CORPS OF ENGINEERS (USACE)

EM 385-1-1 Safety and Health Requirements Manual, Oct 1992.

1.2.2 U. S. ARMY ENGINEERING AND HOUSING SUPPORT CENTER

TN 420-70-2 Lead-Based Paint: Hazard Identification and Abatement, 3 September 1991.

1.2.3 OCCUPATIONAL SAFETY AND HEALTH ADMINISTRATION (OSHA)

29 CFR 1926.62	Lead Exposure in Construction
29 CFR 1910.20	Access to Employee Exposure and Medical Records
29 CFR 1926.21	Safety, Training, and Education

1.2.4 CALIFORNIA DIVISION OF OCCUPATIONAL SAFETY AND HEALTH (Cal/OSHA)

8 CCR, Subchapter 4	Construction Safety Orders
8 CCR, Subchpt 4, Art. 31	Renovation
8 CCR, Subchpt 7, 5216	Lead

1.2.5 UNDERWRITERS LABORATORIES (UL)

UL 586	High-Efficiency, Particulate, Air Filter Units, 18 October 1990, 7th Edition.

1.2.6 AMERICAN NATIONAL STANDARDS INSTITUTE (ANSI)

ANSI Z9.2 (1979)	Fundamentals Governing the Design and Operation of Local Exhaust Systems
ANSI Z87.1	(1989) Occupational and Educational Eye and Face Protection
ANSI Z88.2	(1992) Practices for Respiratory Protection

1.3 DEFINTIONS

1.3.1 **Action Level** means employee exposure, without regard to the use of respirators, to an airborne concentration of lead of 30 micrograms per cubic meter of air (30 µg/m3) calculated as an 8-hour time-weighted average (TWA).

1.3.2 **Competent Person** means one who is capable of identifying existing and predictable lead hazards in the surroundings or working conditions and who has authorization to take prompt corrective measures to eliminate them.

1.3.3 **Lead** means metallic lead, all inorganic lead compounds, and organic lead soaps.

Excluded from this definition are all other organic lead compounds.

1.3.4 **Permissible Exposure Limit (PEL)** an airborne concentration of lead of 50 µg/m3 averaged over an 8-hour period.

1.3.5 **Time-Weighted Average (TWA)** an 8-hour average of airborne lead concentration per cubic meter of air which represents the employees 8-hour workday.

1.4 SUBMITTALS

Government approval is required for submittals with a "GA" designation; submittals having an "FIO" designation are for information only. The following shall be submitted in accordance with Section 01300 SUBMITTAL DESCRIPTIONS:

1.4.1 SD-01 Data

1.4.1.1 Materials and Equipment (FIO): Manufacturer's catalog data for all materials and equipment to be used in the work, including brand name, model, capacity, performance characteristics and any other pertinent information.

a. HEPA vacuum equipment
b. Air monitoring equipment
c. Respirators

1.4.1.2 Contractor's Safety Plan (GA): All subcontractors shall comply with the Contractor's written Safety and Occupational Health Program (SHP), Injury and Illness Prevention Program (IIPP) and comprehensive site-specific Accident Prevention Plan (APP) submitted to the Contracting Officer. The subcontractor may submit an additional APP which addresses Activity Hazard Analyses for each major phase of work. The required respiratory protection and hazard communication program shall be incorporated into the APP. This plan must be accepted in writing by the CO prior to start of any site work.

1.4.1.3 Lead Compliance Program (GA): In accordance with the requirements of 29 CFR 1926.62 (e)(2) the Contractor shall submit a lead compliance program to address the strategies for protecting workers from exposure to lead. All Accident Prevention Program elements required but not specifically covered in the Lead Compliance Program shall be addressed in the APP. The lead compliance program shall be submitted to the Contracting Officer (CO) at least 30 days prior to the date that [renovation/demolition] is to begin on any structures containing lead-based paint. The program shall include all items required by 29 CFR 1926.62 (e)(2) and the following additional items:

a. Lead Work Areas

b. Air Sampling Plan
c. Medical Surveillance Plan
d. Engineering Controls
e Personal Protective Equipment
f. Decontamination Procedures
g. Methods of Dust Control
h. Employee Training Requirements
i. Monitoring/Exposure Records

1.4.2 SD-04 Drawings

Site Layout (FIO): The Contractor shall provide a sketch showing the location, size, and details of [renovation/demolition] areas, and an evaluation of the lead dust generation potential of each task to be performed. The sketch shall also show the location and demarcation of the decontamination and support areas of the project.

1.4.3 SD-08 Statements

1.4.3.1 Qualifications (GA): A written qualifications and organization report providing evidence of qualifications of the Contractor, Contractor's onsite supervisor (competent person), Contractor workers, all subcontractors (to include disposal transportation and disposal facility firms), subcontractor supervisors, subcontractor workers, to perform [renovation/demolition] of structures containing lead-based paint as required herein. The competent person shall have completed a minimum of 48-hours of training in inspection, management, and abatement of lead-based paint. The report shall specify the Contractor's staff organization to include subcontractors, and testing laboratory chain of command to be used for this project.

1.4.3.2 Analytical Laboratory (FIO): The name and location of the analytical laboratory for air monitoring shall be submitted. The Contractor shall furnish documentation that the laboratory performing the analysis is an EPA National Lead Laboratory Accreditation Program (NLLAP) accredited laboratory and that it is rated proficient in the NIOSH/EPA Environmental Lead Proficiency Analytical Testing Program (ELPAT). Certification shall include accreditation for heavy metal analysis, list of experience relevant to analysis of lead in air, and a Quality Assurance and Quality Control Program. Currently, the American Association for Laboratory Accreditation (ASLA) and the American Industrial Hygiene Association (AIHA) are the EPA recognized laboratory accreditors. Documentation shall include the date of accreditation or reaccreditation.

1.4.4 SD-09 Reports

1.4.4.1 Air Sampling Results (GA): Air sample analysis shall be completed and results provided within 24 hours after completion of a sampling period. The CO shall be notified immediately of any airborne levels of lead in excess of the action level. Written sampling results shall be provided

within 5 working days of the date of collection. The air sampling results shall be documented on a Contractor's daily air monitoring log. The daily air monitoring log shall contain the following information for each sample:

a. Date sample collected
b. Date sample analyzed
c. Sample number
d. Sample type (e.g., P = Personal, A = Area)
e. Sample period (start time, stop time, elapsed time (minutes) and TWA calculation
f. Sampling pump manufacturer - model and serial number
g. Average flow rate (liters per minute (L/min))
h. Total air volume sampled (liters (l))
i. Sample results (µg/m3)
j. Location/activity/name where sample collected
k. Calibration method used to calibrate the sampling pumps
l. Name and location of the laboratory conducting the sample analyses

1.4.5 SD-18 Records

1.4.5.1 Respirator Program (GA): Records of the respirator program as required by ANSI Z88.2, 29 CFR 1910.134, and 29 CFR 1926.62.

PART 2 PRODUCTS - Not Used.

PART 3 EXECUTION

3.1 AIR SAMPLING REQUIREMENTS

Contractor shall conduct air sampling for breathing zone concentrations. Air monitoring of airborne concentrations of lead shall be in accordance with 29 CFR 1926.62 and as specified herein.

3.1.1 Air monitoring shall use the collection procedures prescribed in the National Institute of Occupational Safety and Health (NIOSH) 7082 method, and analyzed using either the NIOSH or OSHA 125 method. Until exposures below the Action Level of 30 micrograms per cubic meter of air are established, the Contractor shall provide NIOSH/MSHA certified respiratory protection and protective clothing and equipment. Once airborne exposures are established, the CIH shall determine appropriate respiratory protection, protective clothing and equipment, and air monitoring frequency.

3.1.2 The Contractor shall perform breathing-zone sampling of contaminants to document employees are adequately protected while performing work. All exposures shall be calculated without regard to respiratory protection. Sampling shall consist of full-shift (at least 7 hours sampling time for an 8-hour shift, or at least 90% of the work shift for shifts in excess of 8 hours)

personal samples representative of each classification of worker. Personal samples shall be collected for the first day of work. For each job classification, the person sampled shall be the employee thought to have the greatest possibility of exposure.

3.1.3 The sampling results shall be available within 24 hours of completion of sampling. Results of the previous day's monitoring shall be posted on the information board at the worksite for workers to review.

3.1.4 The Contractor shall maintain a complete record of air sampling and training. Air Sample Records shall include the documents listed below:

3.1.4.1 Chain of Custody form.

3.1.4.2 Date(s), number, duration, location and results of each of the samples taken, including a description of the sampling procedure used to determine representative employee exposure where applicable.

3.1.4.3 A description of the sampling and analytical methods used and evidence of their accuracy.

3.1.4.4 The type of respiratory protective devices worn, if any.

3.1.4.5 Name, social security number, and job classification of the employee monitored and of all other employees whose exposure the measurement is intended to represent.

3.1.4.6 The environmental variables that could affect the measurement of employee exposure.

3.1.5 A field log shall be kept for all samples collected and shall include: sample control number; date sampled; locations; sample identification number; sampler's initials; date sent to analytical laboratory; date analytical results received from laboratory; and date results reported to the COR.

3.2 MEDICAL SURVEILLANCE

3.2.1 The Contractor shall provide a respiratory physical to evaluate pulmonary status as required by 29 CFR 1910.134 and 29 CFR 1926.62 (j) for all workers required to wear respirators.

3.2.2 The Contractor shall provide a comprehensive medical surveillance program prior to assignment and at least annually thereafter for all employees. Medical examinations shall include a work history and a medical history, with particular attention to past lead exposure (occupational

and non-occupational); personal habits (smoking, hygiene); past gastrointestinal, hematologic, renal, cardiovascular, reproductive and neurological problems; a thorough physical examination, with particular attention to teeth, gums, hematologic, gastrointestinal, renal, cardiovascular, and neurological systems; and a blood pressure measurement. A blood sample and analysis which determines blood lead level; hemoglobin and hematocrit determinations, red cell indices, and examination of peripheral smear morphology; zinc protoporphyrin, blood urea nitrogen and serum creatinine; a routine urinalysis with microscopic examination; and any laboratory or other test which the examining physician deems necessary by sound medical practice. Copies of written opinions pertaining to both respiratory protection and lead exposure by the physician performing the physicals shall be available for each employee at the job site for the COR review.

3.2.3 The Contractor shall demonstrate to the CO's satisfaction worker's exposures and blood lead levels prior to start of work on this project. The workers' blood lead levels shall be provided prior to start of work to document that all are below the 25 microgram per deciliter (ug/dl) of whole blood level. All analyses shall be conducted by a laboratory licensed by the Center for Disease Control, United States Department of Health, Education and Welfare (CDC) or which has received a satisfactory grade in blood lead proficiency testing from CDC in the prior twelve months.

3.2.4 Within two weeks of the completion of the project, and prior to fi levels shall be submitted to assure that workers' blood lead levels are All analyses shall be conducted by a laboratory licensed by the Center States Department of Health, Education and Welfare (CDC) or which ha in blood lead proficiency testing from CDC in the prior twelve months.

3.3 TRAINING

3.3.1 The Contractor shall provide all employees involved in lead abatement or [renovation/ demolition] training necessary to comply with the requirements of 29 CFR 1926.62. The Contractor shall assure that all employees with the potential to be exposed to dust containing lead are informed of the following:

3.3.1.1 The specific nature of the operations which could result in exposure to lead above the action level.

3.3.1.2 The purpose, proper selection, fitting, use, and limitations of respirators.

3.3.1.3 The purpose and a description of the medical surveillance program, and the medical removal protection program including information concerning the adverse health effects associated with excessive exposure to lead (with particular attention to the adverse reproductive effects on both males and females).

3.3.1.4 The engineering controls and work practices associated with the employees' job assignments.

3.3.1.5 The contents of any work plan in effect.

3.3.2 A record of this training shall be available at the job site for COR review.

3.4 ENGINEERING CONTROLS

The Contractor shall implement engineering and work practice controls (including administrative controls) to minimize employee exposure to lead. Wherever the engineering and work practice controls which can be instituted are not sufficient to reduce employee exposure below the action level, the employer shall nonetheless use them to reduce exposures to the lowest feasible level and shall supplement them by the use of respiratory protection. The Contractor shall submit written plans which include a description of each operation in which lead may be emitted; a description of the specific means that will be employed to reduce exposure; the reason the specific engineering controls were selected; and air monitoring data which documents the success of these controls in prior, similar projects.

3.5 ADMINISTRATIVE CONTROLS

3.5.1 All work areas shall be posted for authorized entry only. The posting shall be at any possible entry into the area. Only personnel who have met the training and medical surveillance requirements shall be allowed to enter. A log of all entrants to the work area shall be kept and submitted to the CO at the end of the project.

3.5.2 The Contractor shall assure that no food, beverage, and/or tobacco are present or used in the work area. At any possible entry into the area, the following bilingual warning signs (printed in English and Spanish) must be posted:

WARNING
LEAD WORK AREA
POISON
NO SMOKING OR EATING

3.5.3 Personnel who do not meet the requirements for entry or who do not follow the requirements for entry shall not be permitted on the site.

3.6 RESPIRATORY PROTECTION PROGRAM

The Contractor shall implement and submit a Respiratory Protection Program according to 29 CFR 1910.134(b) and 29 CFR 1926.62 (f). The Contractor shall require that all employees wear only NIOSH/MSHA approved respirators with High Efficiency Particulate Air (HEPA) filters. The Contractor shall assure where respirators are used that workers are not exposed to

environments where lead concentrations exceed 500 µg/m3 if half- mask air purifying respirators are utilized, or 2500 µg/m3 if full-face air purifying respirators are utilized.

3.7 PERSONAL PROTECTIVE CLOTHING

The Contractor shall provide and assure that each employee uses appropriate protective clothing such as coveralls or similar full-body disposable clothing, in accordance with 29 CFR 1926.62 (g). The Contractor shall assure that all protective clothing is removed at the completion of a work shift and left on site. Personnel shall be prohibited from wearing potentially contaminated clothing off the site. The removal of dust from protective clothing or equipment by blowing, shaking, or any other means which disperses lead into the air shall be prohibited.

3.8 DECONTAMINATION PROCEDURES

The Contractor shall provide hygiene facilities for employees as required by 29 CFR 1926.62 (i). The Contractor shall establish a decontamination area away from any area where dust could potentially be generated. The decontamination area shall consist of, at a minimum, a vacuum equipped with a HEPA filter (UL 586 filter system capable of collecting and retaining lead-contaminated dust), respirator cleaning and storage area, and clothing storage and/or disposal area. The Contractor shall furnish facilities which provide tepid water for hand and face washing. Employees shall be required to remove personal protective equipment and clothing and wash the hands and face before eating, drinking, smoking, chewing gum or tobacco, taking medications, applying makeup, or touching the hands to the face or mouth.

3.9 WORK PRACTICE CONTROLS

3.91 Dust Control. To protect the worker and the surrounding environment, the Contractor shall control all visible dust emissions. To assure this, the Contractor may use any combination of the following controls, or may propose his own control measures.

a. Wetting surfaces that could potentially produce lead dust with water.
b. Using only HEPA-vacuumed tools for work.
[c. Drilling for new installations through a wet sponge.]
[d. Construction of a mini enclosure for invasive work.]

3.9.2 Work shall be stopped if there are visible emissions that cannot be controlled by any method.

3.10 INSPECTION

The Contractor shall cooperate and coordinate all work with the C requirements. The CO shall inspect each area to assure that all visible

3.11 CLEAN-UP AND DISPOSAL

3.11.1 Disposal Facilities: The Contractor shall be responsible for locating
accept all materials removed from the site, including hazardous paint d
as clean containment materials and used protective clothing, and any w
contain lead. The Contractor shall ensure that dust and water containi
accumulate in a manner that will allow them entry into the storm or s

3.11.2 Segregation of Waste: The Contractor shall segregate the leaded
a hazardous waste or recycling facility. The solid waste (paint) and liq
separately and labeled as required by the recycling disposal facility and
Any water generated must be contained and sampled to determine dispo
be segregated until characterized.

3.11.3 Status of Waste: The painted portion of the demolition debris upo
may be disposed of as general construction debris[, provided the Contr
structure without segregation of materials].

[3.11.4 Segregation of Demolition Debris for Cogeneration: The Contrac
portion of the demolition debris for cogeneration.]

3.11.5 Paint Removed From the Substrate: Should any cracked or peelin
substrate [or any coating be removed prior to the application of heat],
[California W.E.T. (STLC)] [TCLP] lead testing on representative samples
in accordance with disposal facility requirements. The results of such
the CO prior to disposal of the debris. Results in excess of five millig
establish the waste to be hazardous requiring disposal at a Class I lan
be removed from the facility within 90 days of first day of accumulatio

3.11.6 Permits: The Contractor shall obtain any and all permits required
the waste, and shall provide all documentation required by the disposal
the Government.

3.11.7 Payment for Hazardous Waste: Payment for disposal of hazardo
until a signed copy of the manifest from the treatment or disposal fa
lead-containing materials delivered is returned and a copy is furnished

---END OF SECTION---

SECTION TABLE OF CONTENTS

DIVISION 02 - SITE WORK

SECTION 02080

ASBESTOS ABATEMENT

PART 1 GENERAL

1.1 REFERENCES
1.2 DEFINITIONS
1.2.1 Adequately Wet
1.2.1.1 Agressive Method
1.2.2 Amended Water
1.2.2.1 Asbestos
1.2.2.2 [Asbestos-Containing Construction Material (CAL OSHA):
1.2.2.3 Asbestos-Containing Material
1.2.2.4 Authorized Person
1.2.3 Friable ACM
1.2.4 Nonfriable ACM
1.2.5 Category I Nonfriable ACM
1.2.6 Category II Nonfriable ACM
1.2.6.1 Class I Asbestos Work
1.2.6.2 Class II Asbestos Work
1.2.6.3 Class III Asbestos Work
1.2.6.4 Class IV Asbestos Work
1.2.6.5 Competent Person
1.2.6.6 Critical Barrier
1.2.6.7 Disturbance
1.2.6.8 Intact
1.2.6.9 Negative Initial Exposure Assessment
1.2.7 Asbestos Regulated Work Area
1.2.8 Time-Weighted Average (TWA)
1.3 DESCRIPTION OF WORK
1.4 SECURITY
1.5 MEDICAL REQUIREMENTS
1.5.1 Medical Examinations
1.5.2 Medical and Exposure Records
1.6 TRAINING
1.7 RESPIRATORY PROTECTION PROGRAM
1.8 HAZARD COMMUNICATION PROGRAM
1.9 SAFETY AND HEALTH COMPLIANCE
1.10 INDUSTRIAL HYGIENIST (IH)
1.10.1 COMPETENT PERSON
1.11 PERMITS, LICENSES AND NOTIFICATIONS

WARNING: Text in tags exceeds the maximum length of 300 characters

1.12 SUBMITTALS
1.13 PERSONAL PROTECTIVE EQUIPMENT
1.13.1 Respirators
1.13.2 Whole Body Protection
1.13.2.1 Coveralls

1.13.2.2 Gloves
1.13.2.2.1 Head Covering
1.14 Protective Eye Wear
1.15 Other Items
1.16 WARNING SIGNS AND TAPE
1.17 WARNING LABELS
1.18 TOOLS
1.19 RENTAL EQUIPMENT
1.20 AIR MONITORING EQUIPMENT
1.21 EXPENDABLE SUPPLIES
1.21.1 Disposal Containers
1.21.2 Disposal Bags
1.21.3 Leak-tight Wrapping
1.21.4 Sheet Plastic
1.21.5 Wetting Agents
1.21.5.1 Amended Water
1.21.5.2 Removal Encapsulant
1.22 MATERIAL SAFETY DATA SHEETS
1.23 OTHER ITEMS
1.24 PRECONSTRUCTION CONFERENCE

PART 2 PRODUCTS - NOT USED

PART 3 EXECUTION

3.1 GENERAL
3.2 PROTECTION OF ADJACENT WORK OR AREAS TO REMAIN
3.3 CLEAN-UP
3.4 ASBESTOS HANDLING PROCEDURES
3.4.1 Removal of ACM From Exterior Architectural Systems
3.5 FINAL CLEANING AND VISUAL INSPECTION
3.6 AIR SAMPLING
3.6.1 Sampling During Asbestos Abatement Work
3.7 SITE INSPECTION
3.8 CLEAN-UP AND DISPOSAL
3.8.1 Housekeeping
3.8.2 Title to Materials
3.8.3 Collection and Disposal of Asbestos
3.8.4 Asbestos Waste Shipment Record

-- End of Section Table of Contents --

SECTION 02080

ASBESTOS ABATEMENT

PART 1 GENERAL

1.1 REFERENCES

The publications listed below form a part of this specification to the extent referenced. The publications are referred to in the text by basic designation only.

AMERICAN NATIONAL STANDARDS INSTITUTE (ANSI)

ANSI Z87.1	(1989; Errata; Z87.1a) Occupational and Educational Eye and Face Protection
ANSI Z88.2	(1992) Respiratory Protection

AMERICAN SOCIETY FOR TESTING AND MATERIALS (ASTM)

ASTM E 1368	(1990) Visual Inspection of Asbestos Abatement Projects

CODE OF FEDERAL REGULATIONS (CFR)

CFR 29 Part 1910	Occupational Safety and Health Standards
CFR 29 Part 1926	Safety and Health Regulations for Construction
CFR 40 Part 61	National Emission Standards for Hazardous Air Pollutants
CFR 40 Part 763	Asbestos

ENVIRONMENTAL PROTECTION AGENCY (EPA)

EPA 340/1-90-018	(1990) Asbestos/NESHAP Regulated Asbestos Containing Materials Guidance
EPA 340/1-90-019	(1990) Asbestos/NESHAP Adequately Wet Guidance

NATIONAL FIRE PROTECTION ASSOCIATION (NFPA)

NFPA 10	(1990) Portable Fire Extinguishers
NFPA 70	(1993) National Electrical Code

NATIONAL INSTITUTE FOR OCCUPATIONAL SAFETY AND HEALTH (NIOSH)

NIOSH Pub No. 84-100	(1984; Supple 1985, 1987, 1988 & 1990) NIOSH Manual of Analytical Methods

1.2 DEFINITIONS

1.2.1 Adequately Wet

A term as defined in CFR 40 Part 61, Subpart M and EPA 340/1-90-019that means to sufficiently mix or penetrate with liquid to prevent the release of particulates. If visible emissions are observed coming from asbestos-containing material (ACM), then that material has not been adequately wetted. However, the absence of visible emissions is not sufficient evidence of being adequately wetted.

1.2.1.1 Agressive Method

Removal or disturbance of building material by sanding, abrading, grinding, or other method that breaks, crumbles, or disintegrates intact ACM.

1.2.2 Amended Water

Water containing a wetting agent or surfactant with a surface tension of at least 29 dynes per square centimeter when tested in accordance with ASTM D 1331.

1.2.2.1 Asbestos

Asbestos includes chrysotile, amosite, crocidolite, tremolite asbestos, anthophylite asbestos, actinolite asbestos, and any of these minerals that have been chemically treated and/or altered.

1.2.2.2 [Asbestos-Containing Construction Material (CAL OSHA):

Any manufactured construction material which contains more than one tenth of one percent asbestos by weight.]

1.2.2.3 Asbestos-Containing Material

Any material containing more than one percent asbestos

1.2.2.4 Authorized Person

Any person authorized by the Contractor and/or Contracting Officer and required by work duties to be present in regulated areas.

1.2.3 Friable ACM

A term as defined in CFR 40 Part 61, Subpart M and EPA 340/1-90-018that means any material containing more than 1 percent asbestos as determined using the method specified in CFR 40 Part 763, Appendix A, Subpart F, Section 1, Polarized Light Microscopy, that when dry, can be crumbled, pulverized, or reduced to powder by hand pressure. If the asbestos content is less than 10 percent as determined by a method other than point counting by polarized light microscopy (PLM), verify the asbestos content by point counting using PLM.

1.2.4 Nonfriable ACM

A term as defined in CFR 40 Part 61, Subpart M and EPA 340/1-90-018that means any material containing more than 1 percent asbestos as determined using the method specified in CFR 40 Part 763, Appendix A, Subpart F, Section 1, Polarized Light Microscopy, that, when dry, cannot be crumbled, pulverized or reduced to powder by hand pressure.

1.2.5 Category I Nonfriable ACM

A term as defined in CFR 40 Part 61, Subpart M and EPA 340/1-90-018that means asbestos-containing packings, gaskets, resilient floor covering, and asphalt roofing products containing more than 1 percent asbestos as determined using the method specified in CFR 40 Part 763, Appendix A, Subpart F, Section 1, Polarized Light Microscopy.

1.2.6 Category II Nonfriable ACM

A term as defined in CFR 40 Part 61, Subpart M and EPA 340/1-90-018that means any material, excluding Category I nonfriable ACM, containing more than 1 percent asbestos as determined using the methods specified in Appendix A, Subpart F, CFR 40 Part 763, Section 1, Polarized Light Microscopy, that when dry, cannot be crumbled, pulverized, or reduced to powder by hand pressure.

1.2.6.1 Class I Asbestos Work

Activities involving the removal of thermal system insulation (TSI) and surfacing ACM.

1.2.6.2 Class II Asbestos Work

Activities involving the removal of ACM which is not thermal system insulation or surfacing material. This includes, but is not limited to, the removal of asbestos-containing wallboard, floor tile and sheeting, roofing and siding shingles, and construction mastic.

1.2.6.3 Class III Asbestos Work

Repair and maintenance operations, where ACM, including thermal system insulation and surfacing material, is likely to be disturbed.

1.2.6.4 Class IV Asbestos Work

Maintenance and custodial activities during which employees contact ACM and activities to clean up waste and debris containing ACM.

1.2.6.5 Competent Person

In addition to the definition in CFR 29 1926.32 (f), one who is capable of identifying existing asbestos hazards in the workplace and selecting the appropriate control strategy for asbestos exposure, who has the authority to take prompt corrective measures to eliminate them.

1.2.6.6 Critical Barrier

One or more layers of 6-mil plastic sealed over all openings into a work area or any other similarly placed physical barrier sufficient to prevent airborne asbestos in a work area from migrating to an adjacent area.

1.2.6.7 Disturbance

Contact which releases fibers from ACM or debris containing ACM. This term includes activities that disrupt the matrix of ACM, render ACM friable, or generate visible debris. Disturbance includes cutting away small amounts of ACM no greater than the amount which can be contained in one standard sized glove bag or waste bag in order to access a building component. In

no event shall the amount of ACM so disturbedexceed that which can be contained in one glove bag or waste bag which shall not exceed 60 inches in length and width.

1.2.6.8 Intact

ACM which has not crumbled, been pulverized, or otherwise deteriorated so that it is no longer likely to be bound with its matrix.

1.2.6.9 Negative Initial Exposure Assessment

A demonstration by the Contractor that employee exposure during an operation is expected to be consistently below the PELs (TWA and Excursion Limit).

1.2.7 Asbestos Regulated Work Area

An asbestos regulated work area is an area established by the Contractor to demarcaate areas where Class I, II and III asbestos work is conducted, and any adjoining area where debris and waste from sudh asbestos work accumulate; and a work area within which airborne concentrations of asbestos exceed or there is a renewable possiblity they may exceed the permissible exposure limit. This area may be contained and controlled either by an enclosed containment (full containment area, single or double bulkhead containment area, mini-containment area), modified containment, glove bag or outdoor techniques, where asbestos containing materials (ACM) operations are performed and isolated by physical boundaries to prevent the spread of ACM and control access to authorized persons. A full containment, single or double bulkhead containment area, mini-containment area, modified containment, and glove bag work area is isolated within a containment enclosure in which ACM operations are performed. An outdoor regulated work area is not isolated within a containment enclosure, but is otherwise secured by means of physical barriers, boundary warning tape, and signage, etc., to control access by unauthorized persons.

1.2.8 Time-Weighted Average (TWA)

The TWA is an 8-hour time weighted average of airborne concentration of fibers (longer than 5 micrometers) per cubic centimeter of air which represents the employee's 8-hour workday as determined by Appendix A of CFR 29 Part 1926, Section 1926.58.

1.3 DESCRIPTION OF WORK

The work covered by this section includes the requirements for the removal or encapsulation of materials containing asbestos, construction, alteration, repair, maintenance or renovation of structures, substrates, asbestos spill/emergency cleanup, transportation, disposal, storage, containment of, and housekeeping activities involving asbestos or products containing asbestos. Activities include Class II work involving asbestos containing materials (ACM) which are encountered during repair, construction and demolition projects and describes procedures and equipment required to protect workers and occupants of the work area from contact with airborne asbestos fibers and ACM dust and debris. More specific operational procedures shall be outlined in the required Asbestos Hazard Abatement Plan called for elsewhere in this specification. The specific ACM to be abated is identified and a summary of each individual ACM abatement work task is included in Table 1, "Summary of Asbestos Abatement Work Tasks". The summary information, for each work task, identifies: the

number of work tasks in alpha sequence (i.e. A, B, C,... etc.;); the location of the ACM; brief description of the material; the required asbestos technique to be employed (removal, encapsulation, encasement, enclosure, repair); the OSHA work Class designation (I, II, III, IV)the friability designation (friable, nonfriable category I or nonfriable category II); the form and condition (interior architectural (IA), exterior architectural (EA), or mechanical and electrical (ME) and the condition - good, fair, poor); quantity (linear and /or square feet); the required RESPONSE ACTION DETAIL SHEET number specific to the work task (depicts the abatement technique requirements and item to be abated) and the required SET-UP DETAIL SHEET numbers (depicts the required methods of containment and control) specified by the Response Action Detail Sheet. The required RESPONSE ACTION DETAIL and SET-UP DETAIL SHEETS for each work task are appended to Table 1, herein. This abatement work is governed by CFR 40 Part 763.

1.4 SECURITY

A log book shall be kept documenting entry into and out of the asbestos regulated work area. Entry into asbestos regulated work areas shall only be by personnel authorized by the Contractor and Contracting Officer. Personnel authorized to enter asbestos regulated work areas shall be trained, medically evaluated and wear the personal protective equipment, as required by this specification, for the specific asbestos regulated work area to be entered.

1.5 MEDICAL REQUIREMENTS

Medical requirements shall conform to CFR 29 Part 1926, Section 1926.58.

1.5.1 Medical Examinations

Before being exposed to airborne asbestos fibers, workers shall be provided with a comprehensive medical examination as required by CFR 29 Part 1926, Section 1926.58 and other pertinent state or local requirements. This requirement must have been satisfied within the past year. The same medical examination shall be given on an annual basis to employees engaged in an occupation involving asbestos and within 30 calendar days before or after the termination of employment in such occupation. X-ray films of asbestos workers shall be identified to the consulting radiologist and medical record jackets shall be marked with the word "asbestos."

1.5.2 Medical and Exposure Records

Complete and accurate records shall be maintained of each employee's medical examinations, medical records and exposure data as required by CFR 29 Part 1910, Section 1910.20 and CFR 29 Part 1926, Section 1926.58 for a period of 50 years after termination of employment. Records of the required medical examinations and exposure data shall be made available for inspection and copying to: The Assistant Secretary of Labor for Occupational Safety and Health (OSHA) or authorized representatives of the employee and an employee's physician upon request of the employee or former employee. Maintain on file at the work site for review as requested by the Contracting Officer, a copy of the required medical certification for each employee.

1.6 TRAINING

Within 1 year prior to assignment and commencement of work on this asbestos

abatement project, each worker directly involved in Class I, II and III activities, handling ACM, ACM generated wastes to include packaging and transporting such wastes for disposal, shall take and successfully complete a course of asbestos training as specified by United States Environmental Protection Agency (EPA) requirements at CFR 40 Part 763, Subpart E, Appendix C. Workers shall take and successfully complete the "Worker" course. On-site supervisors and technical support personnel shall take and successfully complete the "Contractor/ Supervisor" course. Worker and Contractor/Supervisor courses taken more than 1 year prior to commencement of work are acceptable provided that the individual has successfully completed the annual refresher training as required by the regulatory agency. In addition, prior to the commencement of work, each worker shall be instructed by the Contractor's industrial hygienist and onsite "competent person" supervisor in the following project specific training: the hazards and health effects of the specific types of ACM to be abated, the content and requirements of the Contractor's Asbestos Hazard Abatement Plan, Accident Prevention Plan, Hazard Communication Program, Respiratory Protection Program, site-specific safety and health precautions, work practices, the use requirements and limitations of the personal protective clothing, equipment, and respirators to be used, hands-on-training for each asbestos abatement technique to be employed, heat and/or cold stress monitoring specific to this project, personal hygiene and housekeeping requirements, air monitoring program and procedures, medical surveillance to include medical and exposure record keeping procedures, the association of cigarette smoke and asbestos-related disease, security procedures, emergency response requirements and the contents of CFR 29 Part 1926, Section 1926.58 and its Appendices. Training shall also include, for each employee, a respirator fit test administered by the Contractor's Industrial Hygienist as required by CFR 29 Part 1926, Section 1926.58.

1.7 RESPIRATORY PROTECTION PROGRAM

The Contractor's Industrial Hygienist shall establish in writing, and implement a respiratory protection program in accordance with CFR 29 Part 1926, Section 1926.58, CFR 29 Part 1910, Section 1910.134, ANSI Z88.2, CGA G-7 and CGA G-7.1. DETAIL SHEET NO. 12 entitled "Respiratory Protection Table" is appended herein and shall be used by the Contractor's Industrial Hygienist to establish minimum respiratory protection requirements based on measured or anticipated levels of airborne asbestos fiber concentrations encountered during the performance of the asbestos abatement work. The Contractor's respiratory protection program shall include, but not be limited to, the following elements:

a. The company policy, used for the assignment of individual responsibility, accountability, and implementation of the respiratory protection program.

b. The standard operating procedures covering the selection and use of respirators. Respiratory selection shall be determined by the hazard to which the worker is exposed.

c. Medical evaluation of each user to verify that the worker may be assigned to an activity where respiratory protection is required.

d. Training in the proper use and limitations of respirators.

e. Respirator fit-testing, i.e., quantitative, qualitative and individual functional fit checks.

f. Regular cleaning and disinfection of respirators.

g. Routine inspection of respirators during cleaning and after each use when designated for emergency use.

h. Storage of respirators in convenient, clean, and sanitary locations.

i. Surveillance of work area conditions and degree of employee exposure (e.g., through air monitoring).

j. Regular evaluation of the continued effectiveness of the respiratory protection program.

k. Recognition and procedures for the resolution of special problems as they affect respirator use (e.g., no facial hair that comes between the respirator face piece and face or interferes with valve function; prescription eye wear usage; prohibition of wearing contact lenses; etc.).

l. Proper training in putting on and removing respirators.

1.8 HAZARD COMMUNICATION PROGRAM

A hazard communication program shall be established and implemented in accordance with CFR 29 Part 1926, Section 1926.59.

1.9 SAFETY AND HEALTH COMPLIANCE

In addition to detailed requirements of this specification, the work shall comply with applicable laws, ordinances, criteria, rules, and regulations of Federal, state, regional, and local authorities regarding handling, storing, transporting, and disposing of asbestos waste materials and with the applicable requirements of CFR 29 Part 1910, CFR 29 Part 1926, CFR 40 Part 61, Subpart A, and CFR 40 Part 61, Subpart M, NFPA 10, NFPA 70, NFPA 90A, NFPA 101. Matters of interpretation of standards shall be submitted to the appropriate administrative agency for resolution before starting work. Where the requirements of this specification, applicable laws, rules, criteria, ordinances, regulations, and referenced documents vary, the most stringent requirement as defined by the Contracting Officer shall apply.

1.10 INDUSTRIAL HYGIENIST (IH)

All air sampling and training shall be conducted under the direction of an IH experienced in asbestos abatement and who is currently certified in the comprehensive practice of industrial hygiene by the American Board of Industrial Hygiene (ABIH). The IH shall have a minimum of 2 years asbestos abatement experience and shall have successfully completed the Contractors and Supervisors and Project Designer courses. For the purpose of this contract, the Contractor shall retain the services of an independent IH to perform all contract required air monitoring.

1.10.1 COMPETENT PERSON

On all worksites where employees are engaged in Class I or II asbestos work, the competent person shall perform or supervise the following duties, as applicable:

a. Set up the regulalted area, enclosure, or other containment;
b. Ensure (by on-site inspection) the integrity of the enclosure or containment;
c. Set up procedures to control entry to and exit from the enclosure and/or area;
d. Supuervise all employee exposure monitoring and ensure that it is conducted as required;
e. Ensure that employees working within the enclosure and/or using glove bags wear protective clothing and respirators as required.
f. Ensure through on-site supervision that employees set up and remove engineering controls, use work practices and personal protective equipment in compliance witih all requirements;
g. Ensure that employees use the hygiene facilities and observe the decontamination procedures specified;
h. Ensure through on-site inspections that engineering controls are functioning properly and employees are using proper work practices; and,
i. Ensure notification of other employees on site.

1.11 PERMITS, LICENSES AND NOTIFICATIONS

Necessary permits and licenses shall be obtained in conjunction with the project asbestos abatement, transportation and disposal actions and timely notification furnished of such actions required by Federal, state, regional, and local authorities and as otherwise specified herein. The Contractor shall notify the Regional Office of the USEPA, state's environmental protection agency responsible for asbestos air emissions, local air pollution control district/agency and the Contracting Officer in writing at least 10 days prior to the commencement of work in accordance with CFR 40 Part 61, Subpart M, state and local requirements to include the mandatory "Notification of Demolition and Renovation Record" form and other required notification documents. Notification shall be by Certified Mail - Return Receipt Requested. The Contractor shall furnish copies of the receipts to the CO prior to the commencement of work.

The Contractor shall notify the CO if any of the following occur:

a. If the Contractor or any of its subcontractors are served with notice of violation of any law, regulation, permit or license which relates to this Contract.

b. Proceedings are commenced which could lead to revocation of related permits or licenses.

c. Permits, licenses or other government authorizations relating to this Contract are revoked.

d. Litigation is commenced which would affect this Contract.

e. If the Contractor or any of its Subcontractors become aware that its equipment or facilities are not in compliance or may fail to comply in the future with applicable laws or regulations.

1.12 SUBMITTALS

Government approval is required for submittals with a "GA" designation; submittals having an "FIO" designation are for information only. The following shall be submitted in accordance with Section 01300 SUBMITTAL

DESCRIPTIONS:

SD-01 Data

Materials and Equipment; FIO.

Manufacturer's catalog data for all materials and equipment to be used in the work, including brand name, model, capacity, performance characteristics and any other pertinent information. Test results and certificates from the manufacturer of encapsulants substantiating compliance with performance requirements of these specifications. Material Safety Data Sheets for all chemicals to be used onsite in the same format as implemented in the Contractor's HAZARD COMMUNICATION PROGRAM.

a. Vacuum equipment

b. Air monitoring equipment

c. Respirators

d. Personal protective clothing and equipment

e. Disposal Containers

f. Sheet Plastic

g. Wetting Agent

Safety Plan; GA.

A written Safety and Occupational Health Program (SHP) and a comprehensive site-specific Accident Prevention Plan (APP) at least 30 days prior to start of work. The APP shall include the submission during the project, of Activity Hazard Analyses for each major phase of work. The required respiratory protection and hazard communication program shall be incorporated into the APP. This plan must be accepted in writing by the Contracting Officer prior to start of any site work.

Asbestos Hazard Abatement Plan; GA.

A detailed plan of the response actions to be taken (ACM items to be abated and method of abatement for each abatement work task - see each RESPONSE ACTION DETAIL SHEET) and the control procedures (containment techniques to include safety precautions and work procedures; See SET-UP DETAIL SHEETS) to be used in the abatement of the ACM. The plan shall take into consideration all the individual ACM abatement work tasks as summarized in paragraph DESCRIPTION OF WORK and table 1. The plan shall be prepared by, signed and sealed including certification number and dated by the Contractor's IH. Such plan shall include, but not be limited to the precise personal protective equipment to be used, the location of asbestos regulated work areas including clean and dirty areas, access tunnels, decontamination unit (clean room, shower room, equipment room, storage areas such as load-out unit), abatement method, level of supervision to include roles, responsiblities and authorities, interface of trades involved in the construction, sequencing of asbestos related work, disposal procedures and plan, type of wetting agent and asbestos encapsulant to be used, location of local exhaust equipment, planned air monitoring strategies, and a detailed description of the method to be employed in

order to control the spread of ACM wastes and airborne fiber concentrations. The plan shall also include both fire and medical emergency response procedures and the specific security procedures to be used for all asbestos regulated work areas. The asbestos hazard abatement plan shall be submitted at least 30 days prior to start of work. This plan must be accepted in writing prior to the start of any asbestos abatement work.

Initial Exposure Assessment;GA

The Contractor shall ensure that a "competent person" conducts an exposure assessment immdiately before or at the initiation of the operation to ascertain expected exposures during that operation. The assessment must be comleted and the results submitted in the Asbestos Hazard Abatement Plan. In addition to measurement results, the assessment must review relevant controls and conditions, factors that influence the degree. These include, but are not limited to, the degree and quality of supervision and of employee training, techniques used for wetting the ACM in the various circumstances encountered, placing and repositioning the ventilation equipment, and impacts due to weather conditions. The assessment must be based on the competent person's review of all aspects of the Contractor's performance doing similar jobs. Only if similar controls are used and the work supervised by the same or similarly trained personnel, may past data be relied on. The assessment shall include consideration of all observations, information or calculations which indicate employee exposure to asbestos, including any previous monitoring conducted in the workplace, or of the operations of the Contractor which indicate the levels of airborne asbestos likely to be encountered on the job. However, the assessment may conclude that exposures are likely to be consistently below the PELs only as a conclusion of a "negative exposure assessment". The Contractor shall monitor employees at the beginning of the project. The exposure assessment shall be updated to reflect actual conditions based on the results of exposure monitoring.

SD-04 Drawings

Site Layout; GA.

Descriptions, detail project drawings, site layout to include work site containment area techniques as prescribed on SET-UP DETAIL SHEETS, local exhaust ventilation system locations, decontamination and load-out units, other temporary waste storage facility, access tunnels, location of temporary utilities electrical, water, sewer and boundaries of each asbestos regulated work area.

SD-08 Statements

Qualification; GA.

A written qualifications and organization report providing evidence of qualifications of the Contractor, Contractor's onsite supervisor (competent person), Contractor workers, all subcontractors (to include disposal transportation and disposal facility firms), subcontractor supervisors, subcontractor workers, independent IH firm, independent testing laboratory, and testing laboratory analysts, to perform asbestos abatement activities as required herein. The report shall specify the Contractor's staff organization to include subcontractors, independent IH firm and testing laboratory chain of command to be used for this project. The report shall be signed by the Contractor and the principals of all subcontractor,

independent IH and testing laboratory firms and certify that all firms and personnel involved in the asbestos abatement project fully understand the contents of CFR 29 Part 1926, CFR 40 Part 61, Subparts M, and the Federal, state and local requirements specified in paragraph SAFETY AND HEALTH COMPLIANCE. The Contractor's qualification report shall contain information required below:

a. Evidence that Contractor's full-time onsite supervisor is designated as, and is qualified to be a "competent person" in accordance with CFR 29 Part 1926 and is experienced in the administration and supervision of asbestos abatement projects, including initial exposure assessments, work practices, abatement methods, protective measures for personnel, inspection of asbestos abatement work areas, evaluating the integrity of containment barriers, placement and operation of local exhaust systems, ACM generated waste containment and disposal procedures, decontamination units installation and maintenance requirements, site safety and health requirements, etc. This designated "competent person" onsite supervisor shall be responsible for compliance with applicable Federal, state and local requirements, the Contractor's SHP and APP and the Asbestos Hazard Abatement Plan. The Contractor shall submit evidence that this person has a minimum of 2 years of on-the-job asbestos abatement supervisory experience.

b. The name, address and telephone number of each independent testing laboratory selected to perform the sample analyses and report the results. The testing laboratory shall be completely independent from the Contractor as recognized by Federal, state or local regulations. For each laboratory selected to conduct phase contrast microscopy (PCM) of airborne samples using the methods specified by CFR 29 Part 1926 and NIOSH Pub No. 84-100 Method 7400; written verification of the following criteria, signed by the Testing Laboratory principal and the Contractor shall be submitted:

(1) The laboratory is proficient in conducting phase contrast microscopy (PCM) of airborne samples using the methods specified by CFR 29 Part 1926.1101, OSHA method ID-160, the most current version of NIOSH-01 Method 7400, and transmission electron microscopy (TEM) Method 7402. The laboratory is currently judged proficient in counting airborne asbestos samples by PCM by successful participation within the past year in the American Industrial Hygiene Association (AIHA) Proficiency Analytical Testing (PAT) Program.

(2) The name of each selected microscopist who will analyze airborne samples by PCM with substantiating verification that such person possesses the demonstrated proficiency to conduct PCM analysis by; being judged proficient in counting samples as a current participating analyst in the AIHA PAT Program, and having successfully completed the Asbestos Sampling and Analysis course (NIOSH 582 or equivalent; a copy of course completion certificate is required). When the PCM analysis is to be conducted onsite, the following additional information is required: written documentation certifying that the onsite analyst has been judged proficient in counting samples as a current participating analyst in the AIHA PAT program, written documentation and course completion certificate certifying successful completion of the

Asbestos Samplling and Analysis Course (NIOSH 582 or equivalent), and the name, address and telephone number of an independent testing laboratory which will perform sample analyses and report the results of at least five (5%) of all samples and 100% of all clearance samples meeting the requirements of (1) above.

(3) The laboratory is fully equipped and each analyst possesses demonstrated proficiency to confirm NIOSH Pub No. 84-100 Method 7400 PCM sample analyses results from the same filter by conducting NIOSH Pub No. 84-100 Method 7402 TEM analyses.

Designated Industrial Hygienist Qualifications; GA.

The name, address, telephone number, and resume of the Industrial Hygienist (IH) selected to prepare the Contractor's Asbestos Hazard Abatement Plan, prepare and perform training, direct air monitoring and assist the Contractor's competent person supervisor in implementing and ensuring safety and health requirements are complied with during the performance of all required work. The IH shall be a person who is board certified in the comprehensive or specialized practice of industrial hygiene as determined and documented by the American Board of Industrial Hygiene (ABIH), and has a minimum of 2 years of comprehensive experience in planning and overseeing asbestos abatement activities. The IH shall submit evidence of completion of an Asbestos Supervisor and Asbestos Project Design courses and subsequent refresher training. The IH shall be completely independent from the Contractor and shall not be an employee of the Contractor or be an employee or principal of a firm recognized by Federal, state, or local regulations that would constitute a business relationship that would not be considered independent. A copy of the IH's current valid ABIH Certification shall be included. In addition, the designated IH shall prepare and the Contractor shall submit the name, address, telephone numbers and resumes of additional IH's and industrial hygiene technicians (IHT) who will be assisting the designated IH in performing onsite tasks. IHs and IHTs supporting the designated IH shall have completed an Asbestos Contractor/Supervisor course and have a minimum of 2 full years of practical onsite asbestos abatement experience. The formal reporting relationship between the designated IH and the support IHs and IHTs, the Contractor's competent person, and the Contractor shall be indicated. The resume of each designated IH shall be signed by the designated IH and Contractor. The resume of each designated IH's support IH and IHT staff shall be signed by the individual for whom the resume was prepared and the designated IH.

Landfill and Transporter Qualifications; GA.

Written evidence that the landfill for disposal is approved for asbestos disposal by the USEPA and state and local regulatory agencies. Copies of signed agreements between the Contractor, and each subcontractor to include transporters and the asbestos waste disposal facility to accept and dispose of all asbestos containing waste generated during the performance of this contract. Qualification resumes of each subcontractor transporter to be used, indicating previous experience in transport and disposal of asbestos waste to include all required state and local waste hauler requirements for asbestos.

Employee Training and Certification of Worker Acknowledgment; GA.

The following training documentation for each employee to be engaged in the abatement work :

a. Copy of certification of accreditation for completion of "workers" course (for workers) or "Contractor/Supervisor" Course (for Contractors and onsite supervisory staff) meeting the requirements of EPA's CFR 40 Part 763 or more stringent state criteria, and all subsequent annual refresher training certificates meeting same requirements.

b. A copy of a Contractor generated form entitled Certificate of Workers Acknowledgment shall be completed for each employee in the same format and containing the same information as the example certificate appended to this section.

Training Material; FIO.

A copy of the written project site-specific training material as indicated in CFR 29 Part 1926, Section 1926.58 that will be used to train all on-site employees. This training document shall be signed by the Contractor's IH and competent person supervisor.

Certification of Medical Requirements; GA.

For each worker, a written medical opinion prepared and signed by a licensed physician indicating the following:

a. Summary of the results of the examination.

b. The potential for an existing physiological condition that would place the employee at an increased risk of health impairment from exposure to asbestos.

c. The ability of the individual to wear personal protective equipment including respirators while performing strenuous work tasks under cold stress and/or heat stress conditions.

d. A statement that the employee has been informed of the results of the examination, been provided a copy of the results, informed of the increased risk of lung cancer attributable to the combined effect of smoking and asbestos exposure, and informed of any medical condition that may result from asbestos exposure.

SD-09 Reports

Negative Exposure Assessment;
GA.

The Contractor may demonstrate that employee exposures will be below the PELs by data which conform to the following criteria:

a. Objective data demonstrating that the product or material containing asbestos minerals or the activity involving such product or material cannot release airborne fibers ini concentrations exceeding the TWA and excursion limit under those work conditions having the greatest potential for releasing asbestos; or

b. Where the Contractor has monitored prior asbestos jobs for the PEL and the excursion limit within 12 months of the current or projected job, the monitoring and analhysis were performed in compliance with CFR 29 Part 1926.1101; and the data were obtained during work operations conducted

under workplace conditions "closely resembling" the processes, type of material, control methods, work practices, and environmental conditions used and prevailing in the Contractor's current operations, the operations were conducted by employees whose training and experience were no more extensive than that of employees performing the current job, and these data show that under the conditoins prevailing and which will prevail in the current workplace there is a high degree of certainty that employee exposures will not exceed the TWA and excursion limit; or

c. The results of initial exposure monitoring of the current job made from breathing zone samples that are representative of the 8-hour TWA and 30-minute short-term exposures of each employee covering the operations which are most likely during the performance of the entire asbestos job to result in exposures over the PELs.

Field Tests; FIO.

a. Air sampling reports.

b. Pressure differential recording local exhaust system.

c. Asbestos disposal waste disposal record report.

Air Sampling Results; GA.

Air sample fiber counting shall be completed and results provided within 24 hours after completion of a sampling period. The Contracting Officer shall be notified immediately of any airborne levels of asbestos fibers in excess of established requirements. Written sampling results shall be provided within 5 working days of the date of collection. The written results shall be signed by testing laboratory analyst, testing laboratory principal, the Contractor's IH and the Contractor's IH. The air sampling results shall be documented on a Contractor's daily air monitoring log. The daily log shall identify the calibration method used to calibrate the sampling pumps, the name and location of the laboratory conducting the sample analyses, print name, signature, and date block for the industrial hygienist who conducted the sampling and the review verifying the accuracy of the information.

Notifications; GA.

The Contracting Officer shall be notified in writing 10 days prior to the start of asbestos work. The local fire department shall be notified 3 days before fire-proofing material is removed from a building and the notice shall specify when the material contains asbestos. A copy of the written notification shall be provided to any rental company concerning the intended use of rental equipment and the possibility of asbestos contamination, the decontamination procedures that will be used prior to the return of the equipment. A copy of the rental company's written acknowledgment and agreement shall be included in the submittal.

SD-18 Records

Respirator Program; GA.

Records of the respirator program as required by ANSI Z88.2, CFR 29 Part 1910, Section 1910.134, CFR 29 Part 1926, Section 1926.58.

Asbestos Waste Shipment; GA.

Final completed copies of the Waste Shipment Record for all shipments of waste material as specified in CFR 40 Part 61, Subpart M and other required state waste manifest shipment records as specified herein. Detailed information of all asbestos waste disposals on the "MANDATORY WASTE SHIPMENT RECORD" form in accordance with revised CFR 40 Part 61, Subpart M. Such completed forms signed and dated by the agent of the landfill shall be submitted within 3 days after date of delivery of ACM to the landfill.

1.13 PERSONAL PROTECTIVE EQUIPMENT

Three complete sets of personal protective equipment shall be made available to the Contracting Officer and authorized visitors for entry to the asbestos regulated work area at all times for inspection of the asbestos regulated work area. Contracting Officer and authorized visitors shall be provided with training equivalent to that provided to Contractor employees in the selection, fitting, and use of the required personal protective equipment and the site safety and health requirements. Contractor workers shall be provided with personal protective clothing and equipment as specified herein and the Contractor shall ensure that it is worn properly. The Contractor's Industrial Hygienist and designated competent person supervisor shall select and approve all the required personal protective clothing and equipment to be used.

1.13.1 Respirators

General: The Contractor shall provide respirators and ensure that they are used as required by 1926.1101. Respirators shall be used in the following circumstances:

a. During all Class I asbestos jobs.
b. During all Class II work where the ACM is not removed in a substantially intact state.
c. During all work where employees are exposed above the TWA or excursion limit.

Respirator Selection:

Where respirators are used, the Contractor shall select and provide, at no cost to the employee, the appropriate respirator as specified in Setup Detail Sheet 14, and shall ensure that the employee uses the respirator provided.

The Contractor shall select respirators from among those jointly approved as being acceptable for protection by the Mine Safety and Health Administration (MSHA) and the National Institute for Occupational Safety and Health (NIOSH) under the provisions of 30 CFR 11.

The Contractor shall provide a tight-fitting powered, air-purifying respirator in lieu of any negative-pressure respirator specified in Setup Detail Sheet 14 whenever:

a. An employee chooses to use this type of respirator, and
b. This respirator will provide adequate protection to the employee.

In addition to the above selection criterion, the Contractor shall provide a half-mask air purifying respirator, other than a disposable respirator, equipped with high-efficiency filters whenever the employee performs the following activities: Class II and III asbestos jobs where the Contractor does not produce a negative exposure assessment; and Class

III jobs where TSI or surfacing ACM is being disturbed.

In addition to the above selection criteria, the Contractor shall provide a full facepiece supplied air respirator operated in the pressure demand mode equipped with an auxiliary positive pressure self-contained breathing apparatus for all employees within the regulated area where Class I work is being performed for which a negative exposure assessment has not been produced.

The upgrading or downgrading of respirator type, from the minimum requirements specified for start-up, shall be made by the Contractor's IH based on the monitoring results or initial exposure assessment. All recommendations made by the Contractor's IH to downgrade respirator type shall be submitted in writing to the Contracting Officer for acceptance.

Respirator Program:

Where respiratory protection is used, the Contractor shall institute a respirator program in accordance with CFR 29 Part 1910.134.

The Contractor shall permit each employee who uses a fillter respirator to change the filter elements whenever an increase in breathing resistance is detected and shall maintain an adequate supply of filter elements for this purpose.

Employees who wear respirators shall be permitted to leave work areas to wash their faces and respirator facepieces whenever necessary to prevent skin irritation associated with respirator use.

Respirator Fit Testing:

The Contractor shall ensure that the respirator issued to the employee exhibits the least ossible facepiece leakage and that the respirator is fitted properly.

The Contractor shall perform either quantitative or qualitative face fit tests at the time of initial fitting and at least every 6 months thereafter for each employee wearing a negative-pressure respirator. The qualitative fit tests may be used only for testing the fit of half-mask respirators where they are permitted to be worn, or of full-facepiece air purifying respirators where they are worn at levels at which hald-facepiece air purifying respirators are permitted. A qualitative or quantitative fit test conforming to CFR 29 Part 1926, Appendix C shall be conducted by the Contractor's IH for each Contractor worker required to wear a respirator, and for the Contracting Officer and authorized visitors who enter an asbestos regulated work area where respirators are required to be worn.

1.13.2 Whole Body Protection

Personnel exposed to asbestos shall be provided with whole body protection as specified herein and such protection shall be worn properly. The Contractor's IH and competent person supervisor shall select and approve the whole body protection to be used. The competent person shall examine worksuits worn by employees at least once per workshift for rips or tears that may occur during performance of work. When rips or tears are detected while an employoee is working, rips and tears shall be immediately mended, or the worksuit shall be immediately replaced. Disposable whole body protection shall be disposed of as asbestos contaminated waste upon exiting from the asbestos regulated work area.

1.13.2.1 Coveralls

Disposable - breathable coveralls with a zipper front shall be provided. Sleeves shall be secured at the wrists, and foot coverings secured at the ankles. See DETAIL SHEET 13.

1.13.2.2 Gloves

Gloves shall be provided to protect hands. Cloth gloves may be worn inside the plastic or rubber gloves for comfort, but shall not be used alone. Where there is the potential for hand injuries (i.e., scrapes, punctures, cuts, etc.) an appropriate glove shall be provided and used.

1.13.2.2.1 Head Covering

Hood type disposable head covering shall be provided. In addition, protective head gear (hard hats) shall be provided as required. Hard hats shall only be removed from the asbestos regulated work area after being thoroughly decontaminated.

1.14 Protective Eye Wear

Contact lenses shall not be worn in asbestos regulated work areas. When vision correction is necessary to perform the work task, prescription safety eye wear shall be used. Fog-proof goggles shall be worn by personnel engaged in asbestos abatement activities in the asbestos regulated work area when the use of a full face-piece respirator is not required. Eye protection provided shall be in accordance with ANSI Z87.1.

1.15 Other Items

All other items of whole body protection shall be provided as required and approved by the Contractor's IH.

1.16 WARNING SIGNS AND TAPE

Contractor shall ensure that all personnel understand the warning signs. Warning signs and tape printed in English and the language spoken by the workers shall be provided at the regulated boundaries and entrances to asbestos regulated work areas. Signs shall be located at such a distance that personnel may read the sign and take the necessary protective steps required before entering the area. Warning signs as shown and described in DETAIL SHEET 11 appended herein shall be in vertical format conforming to CFR 29 Part 1910, and CFR 29 Part 1926, minimum 500 by 360 mm and displaying the following legend in the lower panel:

Legend	Lettering
Danger	76 mm (3-inch) Sans Serif Gothic or Block
Asbestos	25 mm (1-inch) Sans Serif Gothic or Block
Cancer and Lung Disease Hazard	25 mm (1-inch) Sans Serif Gothic or Block

Authorized Personnel Only	25 mm (1-inch) Sans Serif Gothic or Block
Authorized Personnel Only	25 mm (1-inch) Gothic
Respirators and Protective Clothing are Required in this Area	25 mm (1-inch) Gothic

Spacing between lines shall be at least equal to the height of the upper of any two lines. Warning tape shall be provided as shown and described on DETAIL SHEET 11, appended herein. Decontamination unit signage shall be as shown and described on DETAIL SHEET 15, appended herein.

1.17 WARNING LABELS

Warning labels shall be affixed to all asbestos disposal containers used to contain asbestos materials, scrap, waste debris, and other products contaminated with asbestos. Containers with preprinted warning labels conforming to requirements specified herein are acceptable. Warning labels shall be as described in DETAIL SHEET 14 appended herein, shall conform to CFR 29 Part 1926 and shall be of sufficient size to be clearly legible displaying the following legend:

DANGER
CONTAINS ASBESTOS FIBERS
AVOID CREATING DUST
CANCER AND LUNG DISEASE
HAZARD

1.18 TOOLS

Vacuums shall be leak proof to the filter, equipped with HEPA filters, be of sufficient capacity and provide the necessary capture velocity at the nozzle or nozzle attachment to efficiently collect, transport and retain the ACM waste material. Power tools shall not be used to remove ACM unless the tool is equipped with effective, integral HEPA filtered exhaust ventilation capture and collection system or has otherwise been approved for use by the Contracting Officer. All residual asbestos shall be removed from reusable tools prior to storage and reuse. Reusable tools shall be thoroughly decontaminated prior to being removed from asbestos regulated work areas.

1.19 RENTAL EQUIPMENT

If rental equipment is to be used, written notification shall be provided to the rental agency, concerning the intended use of the equipment, the possibility of asbestos contamination of the equipment and the steps that will be taken to decontaminate such equipment. A written acceptance of the terms of the Contractor's notification shall be obtained from the rental agency.

1.20 AIR MONITORING EQUIPMENT

The Contractor's IH shall select and approve the air monitoring equipment to be provided and used by the Contractor for evaluation of airborne asbestos fiber concentrations. The equipment shall include, but not be limited to:

a. High-volume sampling pumps that can be calibrated and operated at a constant airflow up to approximately 10 liters per minute when equipped with a sampling train of tubing and filter cassette,

b. Low-volume, battery powered, body-attachable, portable personal pumps that can be calibrated to a constant airflow up to approximately 3.5 liters per minute when equipped with a sampling train of tubing and filter cassette, and a self-contained rechargeable power pack capable of sustaining the calibrated flow rate for a minimum of 10 hours. The pumps shall also be equipped with an automatic flow control unit which shall maintain a constant flow even as filter resistance increases due to accumulation of fiber and debris on the filter surface,

c. Standard 25 millimeter diameter, 0.8 micrometer pore size, mixed cellulose ester membrane filters and cassettes with nonconductive barrels and shrink bands, to be used with low flow pumps in accordance with CFR 29 Part 1926, for personal air sampling,

d. Standard 25 millimeter diameter, 0.45 micrometer pore size, mixed cellulose ester membrane filters and cassettes with non-conductive barrels and shrink bands, to be used with high flow pumps when conducting environmental area sampling using NIOSH Pub No. 84-100 Methods 7400 and 7402 and the transmission electric microscopy method specified at CFR 40 Part 763,

e. Appropriate plastic tubing to connect the air sampling pump to the selected filter cassette,

f. A flow calibrator capable of calibration to within plus or minus 2 percent of reading over a temperature range of minus 20 degrees C (minus 4 degrees F) to plus 60 degrees C (140 degrees F) and traceable to a National Institute for Standards and Technology (NIST) primary standard.

1.21 EXPENDABLE SUPPLIES

1.21.1 Disposal Containers

Leak-tight disposal containers shall be provided for ACM generated wastes as described in DETAIL SHEETS 9A, 9B, 9C and 14 and as specified herein. Leak-tight means that solids, liquids or dust cannot escape or spill out. All disposal containers shall be either pre-labeled or affixed with OSHA warning label as specified in CFR 29 Part 1926.

1.21.2 Disposal Bags

One hundred fifty two thousandths millimeter (6 mil) thick leak-tight pre-labeled (OSHA warning label) bags shall be provided for placement of asbestos generated waste as described in DETAIL SHEET 9A.

1.21.3 Leak-tight Wrapping

Two layers of 0.152 mm (6 mil) (minimum) thick polyethylene sheet stock shall be used for the containment of removed asbestos-containing components or materials such as reactor vessels, large tanks, boilers, insulated pipe segments and other materials too large to be placed in disposal bags as described in DETAIL SHEET 9B. Upon placement of the ACM component or material, each layer shall be individually leak-tight sealed with duct tape.

1.21.4 Sheet Plastic

Sheet plastic shall be provided as specified herein and in the largest sheet size necessary to minimize seams, as indicated on the project drawings.

1.21.5 Wetting Agents

1.21.5.1 Amended Water

Amended water shall meet the requirements of ASTM D 1331.

1.21.5.2 Removal Encapsulant

Removal encapsulant (a penetrating encapsulant) shall be provided when conducting removal abatement activities that require a longer removal time or are subject to rapid evaporation of amended water. The removal encapsulant shall be capable of wetting the ACM and retarding fiber release during disturbance of the ACM equal to or greater than provided by amended water. Performance requirements for penetrating encapsulants are specified in paragraph ENCAPSULANTS.

1.22 MATERIAL SAFETY DATA SHEETS

Material safety data sheets (MSDSs) shall be provided for all hazardous materials brought onto the work-site. One copy shall be provided to the Contracting Officer's onsite Representative and one copy shall be included in the Contractor's Hazard Communication Program.

1.23 OTHER ITEMS

A sufficient quantity of other items shall be provided that may include, but not be limited to: scrapers, brushes, brooms, staple guns, tarpaulins, shovels, rubber squeegees, dust pans, other tools, scaffolding, staging, enclosed chutes, wooden ladders, lumber necessary for the construction of asbestos regulated containment work areas, UL approved temporary electrical equipment, material and chords, ground fault circuit interrupters, water hoses of sufficient length, fire extinguishers, first aid kits, portable toilets, logbooks, log forms, markers with indelible ink, spray paint in bright color to mark areas, project boundary fencing, etc.

1.24 PRECONSTRUCTION CONFERENCE

The Contractor, the Contractor's designated onsite "competent person," supervisor and Contractor's IH shall meet with the Contracting Officer prior to beginning work at a safety preconstruction conference to discuss the details of the Contractor's Asbestos Hazard Abatement Plan, SHP and APP including work procedures and safety precautions. Once accepted by the Contracting Officer, the Asbestos Hazard Abatement Plan, the SHP and APP will be enforced as if an addition to the specification. Any changes required in the specification as a result of the Asbestos Hazard Abatement Plan shall be identified specifically in the plan to allow for free discussion and acceptance by the Contracting Officer prior to the start of work.

PART 2 PRODUCTS - NOT USED

PART 3 EXECUTION

3.1 GENERAL

Asbestos abatement work tasks as summarized in paragraph DESCRIPTION OF WORK and Table 1, shall be performed as specified herein to include the appended Asbestos Abatement DETAIL SHEETS. Personnel shall wear and utilize protective clothing and equipment as specified herein. Eating, smoking, drinking, or applying cosmetics shall not be permitted in the asbestos regulated work area. All hot work (burning, cutting, welding, etc.) shall be conducted under strictly controlled conditions in conformance with CFR 29 Part 1926. Personnel of other trades not engaged in asbestos abatement activities shall not be exposed at any time to airborne concentrations of asbestos unless all the administrative and personal protective provisions as required herein are complied with. Electrical service shall be disconnected where necessary for wet removal. Temporary electrical service shall be provided where needed. If an asbestos spill occurs outside of the asbestos regulated work area, work shall be stopped and the Contracting Officer shall be notified. The condition shall be corrected to the satisfaction of the Contracting Officer including air sampling, prior to resumption of work. The Contractor shall stop abatement work in the asbestos regulated work area immediately when the measured airborne total fiber concentrations, as sampled and analyzed as required herein, (1) equals or exceeds 0.01 f/cc or the preabatement concentration, whichever is greater, - outside the asbestos regulated work area, or (2) equals or exceeds 1.0 f/cc inside the asbestos regulated work area. The Contractor shall correct the condition to the satisfaction of the Contracting Officer, including visual inspection and air samplings. Work resumption will only be allowed upon notification by the Contracting Officer. Corrective actions shall be documented.

3.2 PROTECTION OF ADJACENT WORK OR AREAS TO REMAIN

Asbestos abatement work shall be performed without damage or contamination of adjacent work or area. Where such work or area is damaged or contaminated as verified by the Contracting Officer using visual inspection and/or sample analysis, it shall be restored to its original condition or decontaminated by the Contractor at no expense to the Government as deemed appropriate by the Contracting Officer. This includes inadvertent spill of dirt, dust or debris in which it is reasonable to conclude that asbestos may exist. When these spills occur, work shall stop in all effected areas immediately and the spill shall be cleaned. When satisfactory visual inspection and/or sampling analysis results are obtained and have been evaluated by the Contractor's IH and the Contracting Officer, work may proceed.

3.3 CLEAN-UP

The Contractor shall maintain a clean work area by performing on a daily basis the following housekeeping functions at the end of each shift:

a. Loose ACM shall be prepared for disposal by packaging the waste and removing it from the work area to the load-out area.

3.4 ASBESTOS HANDLING PROCEDURES

The Contractor shall employ proper handling procedures in accordance with CFR 29 Part 1926 and CFR 40 Part 61, Subpart M and the specification requirements herein. The specific abatement techniques and items identified shall be detailed in the Contractor's Asbestos Hazard Abatement Plan including but not limited to details of construction materials, equipment, and handling procedures. Following task descriptions include the appended drawings which detail the required abatement handling technique.

3.4.1 Removal of ACM From Exterior Architectural Systems

Following exterior ACM shall be removed:

Asbestos Cement Siding: See Sheet 81

3.5 FINAL CLEANING AND VISUAL INSPECTION

The abated asbestos regulated work area shall be cleaned by collecting, packing, and storing all gross contamination. Upon completion of the cleaning, the Contractor shall conduct a visual pre-inspection of the cleaned area in preparation for a final inspection. Upon completion of the final cleaning, the Contractor and the Contracting Officer shall conduct a final visual inspection of the cleaned work area in accordance with ASTM E 1368 and document the results on the Final Cleaning and Visual Inspection as specified on the SET-UP DETAIL SHEET 19. If the Contracting Officer rejects the abatement area as not meeting final cleaning requirements, the Contractor shall reclean as necessary and have a follow-on inspection conducted with the Contracting Officer. Recleaning and follow-up reinspections shall be at the Contractor's expense.

3.6 AIR SAMPLING

Sampling and analysis of airborne concentration of asbestos fibers shall be performed in accordance with CFR 29 Part 1926 Section 1926.58, the Contractor's air monitoring plan, and as specified herein. Personal air monitoring samples shall be taken for at least 25 percent of the workers in each shift, or a minimum of two, whichever is greater. Results of the personal samples shall be posted at the job site and made available to the Contracting Officer as specified herein. The Contractor shall maintain a fiber concentration inside enclosed containment regulated work area equal to or less than 0.1 f/cc expressed as an 8 hour, time-weighted average (TWA) during the conduct of the asbestos abatement. If fiber concentration rises above 0.1 f/cc, work procedures shall be investigated with the Contracting Officer to determine the cause. The Contractor's workers shall not be exposed to an airborne fiber concentration in excess of 1.0 f/cc, as average over a sampling period of 30 minutes. Should either an environmental concentration of 1.0 f/cc expressed as an 8-hour TWA or a personal excursion concentration of 1.0 f/cc expressed as a 30-minute sample occur, the Contractor shall stop work immediately, notify the Contracting Officer, and implement additional engineering controls and work practice controls to reduce airborne fiber levels below prescribed limits in the work area. Work shall not restart until authorized by the Contracting Officer. Air monitoring results at the 95 percent confidence level shall be calculated as shown in Table 2 at the end of this section.

3.6.1 Sampling During Asbestos Abatement Work

The Contractor's IH shall provide personal and area sampling as indicated in CFR 29 Part 1926 Section 1926.58, state and local requirements, and in

accordance with the Contractor's air monitoring plan.

3.7 SITE INSPECTION

While performing asbestos removal work, the Contractor shall be subject to onsite inspection by the Contracting Officer who may be assisted by or represented by quality assurance, safety and industrial hygiene personnel. If the work is found to be in violation of this specification, the Contracting Officer or his representative will issue a stop work order to be in effect immediately and until the violation is resolved. Standby time required to resolve the violation shall be at the Contractor's expense.

3.8 CLEAN-UP AND DISPOSAL

3.8.1 Housekeeping

Surfaces of the regulated work area shall be kept free of accumulation of asbestos-containing debris. Meticulous attention shall be given to restricting the spread of dust and debris. When asbestos removal is complete, all asbestos waste is removed from the work site, and final clean-up is completed, the Contracting Officer will certify the areas as safe before the warning signs and boundary warning tape can be removed.

3.8.2 Title to Materials

Material resulting from abatement work, except as specified otherwise, shall become the property of the Contractor and shall be disposed of as specified in applicable local, state, and Federal regulations and herein.

3.8.3 Collection and Disposal of Asbestos

Asbestos waste, asbestos contaminated water, scrap, debris, bags, containers, equipment, and asbestos contaminated clothing, shall be collected and placed in sealed leak-tight, containers (e.g. double 0.152 mm (6-mil) plastic bags) (see Detail Sheet 9A), sealed 0.152 mm (6-mil) double wrapped polyethylene sheet (see Detail Sheet 9.B), sealed fiberboard boxes (see sheet 9.C) or other approved containers. Waste within the containers must be wetted in case the container is breeched. A warning and Department of Transportation (DOT) label shall be affixed or preprinted on each bag; see DETAIL SHEET 14. Waste asbestos material shall be disposed of at an EPA, state and local approved asbestos landfill off Government property. For temporary storage, sealed impermeable containers shall be stored in asbestos waste load-out unit or in a storage/transportation conveyance (i.e.; dumpster, roll-off waste boxes, etc.) in a manner as accepted by and in an area as assigned by the Contracting Officer. Procedure for hauling and disposal shall comply with CFR 40 Part 61, Subpart M, state, regional, and local standards.

3.8.4 Asbestos Waste Shipment Record

The Contractor shall complete and provide final completed copies of the Waste Shipment Record for all shipments of waste material as specified in CFR 40 Part 61, Subpart M and other required state waste manifest shipment records within 3 days of delivery to the landfill.

TABLE 1

SUMMARY OF WORK TASKS

TASK (1)	A
LOCATION (2)	Exterior
DESCRIPTION (3)	Transite Shingles
TECHNIQUE (4)	REM
FRIABLE (5)	
NF-2	X
FORM (6)	EA
CONDITION	G
QUANTITY (7)	1,860 sq ft
RESP. SHEET (8)	81
SET-UP SHEET (9)	9A, 9B, 9C, 11, 12, 13, 14, 19

NOTES:
(1) Alpha sequence of work tasks (A, B, C, etc.) for each asbestos regulated work area. Each category of friability has a separate task.
(2) Specific location of the work (building, floor, area, etc.)
(3) Description of material.
(4) Technique to be used: Removal = REM; Encapsulation = ENCAP; Encasement = ENCAS; Enclosure = ENCL; Repair = REP.
(5) Friability of materials: Friable = FR; Non-friable = NF-1 or NF-2; (number indicates friable category).
(6) Form: Interior or Exterior Architectural = IA or EA; Mechanical/Electrical = ME. Condition: Good = G; Fair = F; Poor = P.
(7) Quantity of ACM in Linear Meters (m); square meters
(8) Response action sheet specifies the material to be abated and the method to be used.
(9) Set-up sheets indicate the containment and control methods to be used in support of the response action.

TABLE 2

FORMULA FOR CALCULATION OF THE 95 PERCENT CONFIDENCE LEVEL

(Reference: NIOSH 7400)

Fibers/cc (01.95 percent CL) = X + [(X) * (1.645) * (CV)]

Where: X = ((E) (AC)) / ((V) (1000))

E = ((F/Nf) - (B/Nb)) / Af

CV = The precision value; 0.45 shall be used unless the analytical laboratory provides the Contracting Officer with documentation (Round Robin Program participation and results) that the laboratory's precision is better.

AC = Effective collection area of the filter in square millimeters

V = Air volume sampled in liters

E = Fiber density on the filter in fibers per square millimeter

F/Nf = Total fiber count per graticule field

B/Nb = Mean field blank count per graticule field

Af = Graticule field area in square millimeters

TABLE 3

NI0SH METHOD 7400

PCM ENVIRONMENTAL AIR SAMPLING PROTOCOL (NON-PERSONAL)

Sample Location	Minimum No. of Samples	Filter Pore Size (Note 1)	Min. Vol.(Note 2) (Liters)	Sampling Rate (liters/min)
Inside Abatement Area	5/140 Square Meters (Notes 3 & 4)	0.45 micrometers	1500	2-10
Each Room in Abatement Area Less than 140 Square Meters	1	0.45 micrometers	1500	2-10
Field Blank	2	0.45 micrometers	0	0
Laboratory Blank	1	0.45 micrometers	0	0

Notes:
1. Type of filter is Mixed Cellulose Ester.

2. Ensure detection limit for PCM analysis is established at 0.005 fibers/cc.

3. One sample should be added for each additional 140 square meters.

4. No less than 5 samples are to be taken per abatement area, plus two field blanks.

TABLE 4

EPA AHERA METHOD: TEM AIR SAMPLING PROTOCOL

Location Sampled	Minimum No. of Samples	Filter Pore Size	Min. Vol. (Liters)	Sampling Rate (liters/min.)
Inside Abatement Area	5	0.45 micrometers	1199	2-10
Outside Abatement Area	5	0.45 micrometers	1199	2-10
Field Blank	2	0.45 micrometers	0	0
Laboratory Blank	1	0.45 micrometers	0	0

Notes:
1. Type of filter is Mixed Cellulose Ester.

2. The detection limit for TEM analysis is 70 structures/square mm.

CERTIFICATE OF WORKER'S ACKNOWLEDGMENT

PROJECT NAME _____ CONTRACT NO. _____
PROJECT ADDRESS _____ _____
CONTRACTOR'S NAME _____
EMPLOYEE'S NAME _____
WORKING WITH ASBESTOS CAN BE DANGEROUS. INHALING ASBESTOS FIBERS HAVE BEEN LINKED WITH TYPES OF LUNG DISEASE AND CANCER. IF YOU SMOKE AND INHALE ASBESTOS FIBERS, THE CHANCE THAT YOU WILL DEVELOP LUNG CANCER IS GREATER THAN THAT OF THE NONSMOKING PUBLIC.

Your employer's contract for the above project requires that: you be provided with and complete formal and project specific training, you be supplied with proper personal protective equipment including respirators, that you be trained in its use and that you receive a medical examination to evaluate your physical capacity to perform your assigned work tasks, under the environmental conditions expected, while wearing the required personal protective equipment. These things are to be done at no cost to you. By signing this certification, you are acknowledging that your employer has met these obligations to you.

Date Completed

FORMAL TRAINING: I have completed a formal training course for: asbestos abatement workers (for workers) (Contractor/ Supervisor) that meets EPA's and this state's requirements. . . . . _____

In addition, I have completed annual refresher as required by EPA and this state's requirements. . . . . _____

PROJECT SPECIFIC TRAINING: I have been provided and have completed the project specific training required by this Contract. My employer's industrial hygienist and competent person supervisor conducted the training. . . . . _____

RESPIRATORY PROTECTION: I have been trained in accordance with the criteria in the Contractor's Respiratory Protection program. I have been trained in the dangers of handling and breathing asbestos dust and in the proper work procedures and use and limitations of the respirator(s) I will wear. I have been trained in and will abide by the facial hair policy of my employer. . . . . _____

RESPIRATOR FIT-TEST TRAINING: I have been trained in the proper selection, fit, use, care, cleaning, and maintenance, and storage of the respirator(s) that I will wear. I have been fit-tested in accordance with the criteria in the Contractor's Respiratory Program and have received a satisfactory fit. I have been assigned my individual respirator. I have been taught how to properly perform positive and negative pressure fit-check upon donning negative pressure respirators each time. . . . . _____

CERTIFICATE (Continued)

MEDICAL EXAMINATION: I have had a medical examination within the last twelve months which was paid for by my employer. The examination included: health history, pulmonary function tests, and may have included an evaluation of a chest x-ray. A physician made determination regarding my physical capacity to perform work tasks on the project while wearing personal protective equipment including a respirator. I was personally provided a copy and informed of the results of that examination. My employer's industrial hygienist evaluated the medical certification provided by the physician and checked the appropriate blank below.
The physician determined that there:

_____ were no limitations to performing the required work tasks;

_____ were identified physical limitations to performing the required work tasks.

Employees Signature _____ date _____

Printed Name _____

Social Security Number _____

Contractor's Industrial Hygienist Signature _____
date _____

Printed Name _____

Social Security Number _____

Date medical exam completed _____

-- End of Section --

SECTION TABLE OF CONTENTS

DIVISION 02 - SITE WORK

SECTION 02221

EXCAVATION, FILLING AND BACKFILLING FOR BUILDINGS

PART 1 GENERAL

1.1 SCOPE OF WORK
1.2 REFERENCES
1.3 DEFINITIONS
1.3.1 Degree of Compaction
1.3.2 Soil Classification Testing
1.3.3 Moisture Content
1.4 SUBMITTALS

PART 2 PRODUCTS

2.1 MATERIALS
2.1.1 Satisfactory Materials
2.1.2 Unsatisfactory Materials
2.1.2.1 Unstable Materials
2.2 CONTROLLED LOW STRENGTH MATERIAL
2.3 BORROW MATERIAL
2.3.1 Selection
2.3.2 Select Material
2.3.3 Bridging Material

PART 3 EXECUTION

3.1 CLEARING AND GRUBBING
3.2 EXCAVATION
3.3 DRAINAGE AND DEWATERING
3.3.1 Drainage
3.3.2 Dewatering
3.4 SHORING
3.5 CLASSIFICATION OF EXCAVATION
3.6 BLASTING
3.7 UTILITY AND DRAIN TRENCHES
3.8 EXCAVATED MATERIALS
3.9 FINAL GRADE OF SURFACES TO SUPPORT CONCRETE
3.10 SUBGRADE PREPARATION
3.11 FILLING AND BACKFILLING
3.12 FIELD TESTING CONTROL
3.12.1 Field Density with Moisture Content
3.12.2 Moisture-Density Relationships
3.12.3 Gradations, Atterberg Limits, and Classification
3.12.4 Testing Schedule
3.13 GRADING
3.14 PROTECTION

-- End of Section Table of Contents --

SECTION 02221

EXCAVATION, FILLING AND BACKFILLING FOR BUILDINGS

PART 1 GENERAL

1.1 SCOPE OF WORK

This section specifies final earthwork for building foundations and slabs-on-grade. Underground utility earthwork in building areas is specified in Section 02222 EXCAVATION, TRENCHING, AND BACKFILLING FOR UTILITIES SYSTEMS.

1.2 REFERENCES

The publications listed below form a part of this specification to the extent referenced. The publications are referred to in the text by basic designation only.

AMERICAN CONCRETE INSTITUTE

ACI 229R	(1994) Controlled Low Strength Materials

AMERICAN SOCIETY FOR TESTING AND MATERIALS (ASTM)

ASTM C 33	(1993) Concrete Aggregates
ASTM C 39	(1986) Compressive Strength of Cylindrical Concrete Specimens
ASTM C 117	(1990) Materials Finer Than 75-um (No.200) Sieve in Mineral Aggregates by Washing
ASTM C 131	(1989) Resistance to Degradation of Small -Size Coarse Aggregate by Abrasion and Impact in the Los Angeles Machine
ASTM C 136	(1993) Sieve Analysis of Fine and Coarse Aggregates
ASTM D 422	(1963; R 1990) Particle-Size Analysis of Soils
ASTM D 1556	(1990) Density and Unit Weight of Soil in Place by the Sand-Cone Method
ASTM D 1557	(1991) Laboratory Compaction Characteristics of Soil Using Modified Effort (56,000 ft-lbf/lbf/cubic ft. (2,700 m-kN/cu. m.))
ASTM D 2216	(1992) Laboratory Determination of Water(Moisture) Content of Soil, Rock, and Soil-Aggregate Mixtures
ASTM D 2217	(1985) Wet Preparation of Soil Samples for Particle Size Analysis and Determination

	of Soil Constants
ASTM D 2487	(1992;R 1993) Classification of Soils for Engineering Purposes (Unified Soil Classification System)
ASTM D 2922	(1991) Density of Soil and Soil-Aggregate in Place by Nuclear Methods (Shallow Depth)
ASTM D 3017	(1988) Water Content of Soil and Rock in Place by Nuclear Methods (Shallow Depth)
ASTM D 3740	(1992) Minimum Requirements for Agencies Engaged in the Testing and/or Inspection of Soil and Rock as Used in Engineering Design and Construction
ASTM D 4318	(1984) Liquid Limit, Plastic Limit, and Plasticity Index of Soils
ASTM E 329	(1998) Agencies Engaged in the Testing and/or Inspection of Materials Used in Construction

CORPS OF ENGINEERS, SACRAMENTO DISTRICT (COE)

CESPK PAM 415-1-2	(1989) Construction Control Manual
EM 385-1-1	(1992) Safety and Health Requirements Manual

1.3 DEFINITIONS

1.3.1 Degree of Compaction

Degree of compaction is the ratio of the field dry density to the maximum dry density determined in the laboratory, expressed as a percentage of the maximum density. The field dry density shall be determined by ASTM D 1556, and the laboratory maximum dry density shall be determined by ASTM D 1557, Procedure C.

1.3.2 Soil Classification Testing

Tests shall be performed by the Contractor for the determination of satisfactory material in accordance with the Construction Control Manual CESPK PAM 415-1-2. Certified test reports shall be furnished to the Contracting Officer for approval prior to use of the material. Materials shall be classified in accordance with ASTM D 2487. Gradations shall be determined in accordance with ASTM C 117 and ASTM C 136. Atterberg Limits shall be determined in conformance with ASTM D 4318, method A on samples prepared in accordance with ASTM D 2217.

1.3.3 Moisture Content

Moisture content is the ratio of the weight of the water to the weight of the solid matter expressed as a percentage and is determined by ASTM D 2216.

1.4 SUBMITTALS

Government approval is required for submittals with a "GA" designation; submittals having an "FIO" designation are for information only. The following shall be submitted in accordance with Section 01300 SUBMITTAL PROCEDURES:

SD-09 Reports

Field Testing Control; FIO. Select Material, Bridging Material; GA.

All laboratory and field tests conducted in accordance with paragraph FIELD TESTING CONTROL. Certified test reports and analyses certifying that the select and bridging material conforms to the specified requirements.

PART 2 PRODUCTS

2.1 MATERIALS

2.1.1 Satisfactory Materials

Satisfactory material shall classify according to ASTM D 2487 as GW, GP, GC, GM, SW, SP, SC, SM, ML, CL and combinations of these such as SP-SM. In addition, satisfactory material shall be free of cobbles and debris and not exceed more than 2% organics.

Native soils excavated within the project limits which are satisfactory may be used for fill and backfill for the building foundation and below the slab-on-grade.

2.1.2 Unsatisfactory Materials

Materials which do not comply with the requirements for satisfactory materials are unsatisfactory. Materials classified in accordance with ASTM D 2487 as CH, MH, Pt, OH, and OL are unsatisfactory.

2.1.2.1 Unstable Materials

Unstable Material is that material that cannot be properly compacted or will not support construction equipment due to excess moisture. Potentially unstable materials are soils with natural moisture contents near or above the plastic limit as determined by ASTM D 4318 or 5 or more percent above the ASTM D 1557 optimum moisture content. Unstable materials are also indicated by waving, rutting, and shoving under the wheels and rollers of construction equipment.

2.2 CONTROLLED LOW STRENGTH MATERIAL

Controlled low strength material(CLSM) shall consist of a lean concrete mix conforming to the following:

1. The requirements of ACI 229R.
2. Type II portland cement in accordance with ASTM C 150.
3. Size 7 concrete coarse aggregate in accordance with ASTM C 33.
4. A compressive strength at 28 days between 550 and 1100 kPa in accordance with ASTM C 39.

2.3 BORROW MATERIAL

Borrow material shall be selected to meet requirements and conditions of the particular fill for which it is to be used.

2.3.1 Selection

Borrow material shall be obtained from sources outside the limits of Government property and is subject to approval by the Contracting Officer. The source of the material shall be the Contractor's responsibility. Unless otherwise provided in the contract, the Contractor shall obtain from the owners of the borrow pit the right to procure material, shall pay all royalties and other expenses involved, and shall develop the source, including rights-of-way for hauling.

2.3.2 Select Material

Select material shall be free of organics and debris and shall conform to the following gradation and Atterberg Limits:

Sieve Size	Percent Passing by Weight
50 mm	100
No. 4	50-90
No. 200	5-35

Liquid Limit of less than 35, plasticity Index of less than 12.

2.3.3 Bridging Material

Bridging material for stabilizing unstable areas shall:

A. Be hard and durable.

B. Have a percentage of wear not to exceed 50 after 500 revolutions according to ASTM C 131.

C. Be well graded.

D. Have the following gradation:

Sieve Size	Percent by Weight Passing
75 mm	100
25 mm	30-50
No. 4	10-30
No. 40	0-10

PART 3 EXECUTION

3.1 CLEARING AND GRUBBING

The areas within lines 1.5 m outside of each building and structure line shall be cleared and grubbed of trees, stumps, roots, brush and other vegetation, debris, existing foundations, pavements, utility lines, structures, fences, and other items that would interfere with construction operations. Stumps, logs, roots, and other organic matter shall be completely removed and the resulting depressions shall be filled with satisfactory material, placed and compacted in accordance with paragraph FILLING AND BACKFILLING. Materials removed shall be disposed of outside the limits of Government-controlled property at the Contractor's responsibility.

3.2 EXCAVATION

Excavation shall conform to the dimensions and elevations indicated for

each building, structure, and footing except as specified hereinafter, and shall include trenching for utility and foundation drainage systems to a point 1.5 m beyond the building line of each building and structure, excavation for outside grease interceptors, underground fuel tanks, and all work incidental thereto. Trenching for utilities is specified in Section 02222 EXCAVATION, TRENCHING, AND BACKFILLING FOR UTILITIES SYSTEMS. Excavation shall extend a sufficient distance from walls and footings to allow for placing and removal of forms. Excavations below indicated depths will not be permitted except to remove unsatisfactory material. Unsatisfactory material encountered below the grades shown shall be removed as directed and replaced with properly compacted select material. No additional compensation shall be forthcoming for the excavation and replacement of materials rendered unsatisfactory by Contractor managed operations. A change in the Contract price shall be considered for incidents where (in the interpretation of the Contracting Officer) unsatisfactory materials are encountered at depths and/or locations that are substantially different from those shown on the Contract Exploration Logs. Satisfactory material removed below the depths indicated without specific direction of the Contracting Officer shall be replaced at no additional cost to the Government to the indicated excavation grade with satisfactory materials. Select material shall be placed and compacted as specified in paragraph FILLING AND BACKFILLING. Determination of elevations and measurements of approved overdepth excavation of unsatisfactory material below grades indicated shall be done under the direction of the Contracting Officer.

3.3 DRAINAGE AND DEWATERING

3.3.1 Drainage

Surface water shall be directed away from excavation and construction sites so as to prevent erosion and undermining of foundations. Diversion ditches, dikes and grading shall be provided and maintained as necessary during construction. Excavated slopes and backfill surfaces shall be protected to prevent erosion and sloughing. Excavation shall be performed so that the site and the area immediately surrounding the site and affecting operations at the site shall be continually and effectively drained. No additional compensation shall be forthcoming for the removal and replacement of materials rendered unsatisfactory because of the Contractor's failure to adequately drain the site.

3.3.2 Dewatering

Groundwater and water from broken utility lines that flow toward or into excavations shall be controlled to prevent sloughing of excavation slopes and walls, boils, uplift and heave in the excavation and to eliminate interference with orderly progress of construction. French drains, sumps, ditches or trenches will not be permitted within 1 meter of the foundation of any structure, except with specific written approval, and after specific contractual provisions for restoration of the foundation area have been made. No additional compensation shall be forthcoming for the removal and replacement of materials rendered unsatisfactory because of the Contractor's failure to adequately dewater excavations.

3.4 SHORING

Shoring, including sheet piling, shall be furnished and installed as necessary to protect workmen, banks, adjacent paving, structures, and utilities. All trench walls shall be in compliance with the Corps of

Engineers Safety and Health Requirements Manual, EM 385-1-1. Shoring, bracing, and sheeting shall be removed as excavations are backfilled, in a manner to prevent caving. No additional compensation shall be forthcoming for shoring.

3.5 CLASSIFICATION OF EXCAVATION

Excavation will be unclassified regardless of the nature of material encountered. No additional compensation shall be forthcoming for the removal of rock or cemented soil materials.

3.6 BLASTING

Blasting will not be permitted.

3.7 UTILITY AND DRAIN TRENCHES

Trenches for underground utilities systems and drain lines shall be excavated as specified in Section 02222 EXCAVATION, TRENCHING, AND BACKFILLING FOR UTILITIES SYSTEMS. Trenches shall be excavated to the required alignment, depth, and slope.

3.8 EXCAVATED MATERIALS

Satisfactory excavated material shall be stockpiled and used for building fill and backfill. Satisfactory material in excess of that required for the permanent work and unsatisfactory material that is considered clean fill shall be disposed off-government property unless a permit is obtained from the Contracting Officer to dispose on-depot. Stripping and construction debris shall be disposed off-government property.

3.9 FINAL GRADE OF SURFACES TO SUPPORT CONCRETE

All foundation excavations shall be inspected and approved by the Contracting Officer prior to the placement of reinforcing steel and again immediately prior to the placement of foundation concrete. No steel or concrete shall be placed in excavations that contain unstable material, standing water, debris, or loose material. The bottoms of foundation excavations may be protected and leveled with a 100 mm layer of controlled low strength material.

3.10 SUBGRADE PREPARATION

Unsatisfactory material in surfaces to receive fill or in excavated areas shall be removed and replaced with select material. The surface shall be scarified to a depth of 150 mm before the fill is started. Sloped surfaces steeper than 1 vertical to 4 horizontal shall be plowed, stepped, benched, or broken up so that the fill material will bond with the existing material. When subgrades are less than the specified density, the ground surface shall be broken up to a minimum depth of 150 mm, pulverized, and compacted to the specified density. When the subgrade is part fill and part cut or ungraded natural ground, the cut or ungraded natural ground portion shall be scarified to a depth of 300 mm and compacted as specified for the adjacent fill. Material shall not be placed on surfaces that are muddy, frozen, or contain frost. Compaction shall be accomplished by sheepsfoot rollers, pneumatic-tired rollers, steel-wheeled rollers, or other approved equipment well suited to the soil being compacted. Material shall be moistened or aerated as necessary to plus or minus 2 percent of the optimum moisture content. Minimum subgrade density shall be as

specified in paragraph FILLING AND BACKFILLING.

3.11 FILLING AND BACKFILLING

Satisfactory material shall be used in bringing fills and backfills to the lines and grades indicated and for replacing unsatisfactory materials. If sufficient satisfactory material cannot be obtained from within the project boundaries, select material shall be used for fill and backfill. Place material in horizontal layers not exceeding 200 mm in loose thickness, or 150 mm when hand-operated compactors are used. After placing, each layer shall be plowed, disked, or otherwise broken up, moistened or aerated as necessary, thoroughly mixed and compacted as specified. Backfilling shall not begin until construction below finish grade has been approved, underground utilities systems have been inspected, tested and approved, forms removed, and the excavation cleaned of trash and debris. Backfill shall be brought to indicated finish grade and shall include backfill for outside grease interceptors and underground fuel tanks. Backfill shall not be placed in wet or frozen areas. Heavy equipment for spreading and compacting backfill shall not be operated closer to foundation or retaining walls than a distance equal to the height of backfill above the top of footing; the area remaining shall be compacted in layers not more than 100 mm in compacted thickness with power-driven hand tampers suitable for the material being compacted. Backfill shall be placed carefully around pipes or tanks to avoid damage to coatings, wrappings, or tanks. Backfill shall not be placed against foundation walls prior to 7 days after completion of the walls. As far as practicable, backfill shall be brought up evenly on each side of the wall and sloped to drain away from the wall. Each layer of fill and backfill shall be compacted to not less than the percentage of maximum dry density specified below at plus or minus 2 percent of the optimum moisture content:

Fill, embankment, and backfill	Percent Laboratory maximum dry density
Under & around footings, and below slabs, steps and ramps	95

Approved compacted subgrades that are disturbed by the Contractor's operations or adverse weather shall be scarified and compacted as specified herein before to the required density prior to further construction thereon. No additional compensation shall be forthcoming for subgrade correction measures. Recompaction over underground utilities and heating lines shall be by hand tamping only.

3.12 FIELD TESTING CONTROL

Contractor quality control testing shall be performed in accordance with the Construction Control Manual, CESPK PAM 415-1-2 and as specified herein. Testing shall be the responsibility of the Contractor and shall be performed by an independent commercial testing laboratory in accordance with Construction Control Manual. Approval of testing facilities shall be based on compliance with ASTM E 329 and ASTM D 3740, and work requiring testing will not be permitted until approved by the Contracting Officer. All field density test results shall be reported in writing to the Contracting Officer no later than close of business the day following the test completion date.

3.12.1 Field Density with Moisture Content

Field in-place density shall be determined in accordance with ASTM D 1556 or ASTM D 2922. When ASTM D 2922 is used, the calibration curves shall be checked, and adjusted if necessary, using the sand cone method as described in paragraph Calibration of the ASTM publication. When ASTM D 2922 is used, the Contractor shall obtain all required clearances and permits for the use of nuclear test methods. ASTM D 2922 results in a wet unit weight of soil and when using this method, ASTM D 3017 shall be used to determine the moisture content of the soil. The calibration curves furnished with the moisture gauges shall be checked along with density calibration checks as described in ASTM D 3017. The calibration checks, using ASTM D 1556 and ASTM D 2216, for both the density and moisture gauges shall be made at the beginning of a job and on each different type of material encountered; a minimum one calibration check shall be performed for each set of five nuclear compaction tests.

3.12.2 Moisture-Density Relationships

Moisture-density relationships shall be determined by the test method outlined in ASTM D 1557, Procedure C.

3.12.3 Gradations, Atterberg Limits, and Classification

Gradation testing for soil materials shall be performed in accordance with ASTM D 422. Atterberg limits shall be determined by ASTM D 4318. Classification shall be determined by the test methods outlined ASTM D 2487.

3.12.4 Testing Schedule

The following number of tests shall be the minimum acceptable for each type operation.

(a) Field Density and Moisture Content: For wall footings and utility trenches, perform one test for each lift or each increment or fraction of 60 meters. For isolated column footings, one random test during backfilling operations at each footing location.

(b) Moisture-Density Relationship with Gradation, Atterberg Limits, and Classification: From a bulk sample; one set of tests for every 5 field density tests (with not less than 1 test for each type of material) for the first 25 field density tests. Thereafter, one additional test for each change in material.

(c) Miscellaneous Granular Materials: For capillary water barrier material and controlled low-strength material aggregate; perform a minimum of two random sieve size analyses and two wear tests for each material source. Perform a minimum of two sieve size analyses and two water content tests for in place sand as the vapor barrier cushion. A minimum of two compressive strength tests shall be performed for each source of controlled low strength material.

3.13 GRADING

Areas within 1.5 m outside of each building and structure line shall be constructed true-to-grade, shaped to drain, and shall be maintained free of trash and debris until final inspection has been completed and the work has been accepted.

3.14 PROTECTION

Settlement or washing that occurs in graded, topsoiled, or backfilled areas prior to acceptance of the work shall be repaired and grades reestablished to the required elevations and slopes.

-- End of Section --

SECTION TABLE OF CONTENTS

DIVISION 02 - SITE WORK

SECTION 02222

EXCAVATION, TRENCHING, AND BACKFILLING FOR UTILITIES SYSTEMS

PART 1 GENERAL

1.1 SCOPE OF WORK
1.2 REFERENCES
1.3 DEFINITIONS
1.3.1 Degree of Compaction
1.3.2 Soil Classification Testing
1.3.3 Moisture Content
1.4 SUBMITTALS

PART 2 PRODUCTS

2.1 MATERIALS
2.1.1 Satisfactory Materials
2.1.2 Unsatisfactory Materials
2.1.2.1 Unstable Materials
2.1.3 Initial Backfill Materials
2.1.3.1 Select Granular Material
2.1.3.2 Controlled Low Strength Material
2.1.3.3 Sand
2.1.4 Plastic Marking Tape

PART 3 EXECUTION

3.1 EXCAVATION
3.1.1 Trench Excavation
3.1.1.1 Bottom Preparation
3.1.1.2 Removal of Unyielding Material
3.1.1.3 Removal of Unstable Material
3.1.1.4 Excavation for Appurtenances
3.1.1.5 Jacking, Boring, and Tunneling
3.1.1.6 Stockpiles
3.2 BACKFILLING AND COMPACTION
3.2.1 Trench Backfill
3.2.1.1 Replacement of Unyielding Material
3.2.1.2 Replacement of Unstable Material
3.2.1.3 Bedding and Initial Backfill
3.2.1.4 Final Backfill
3.2.2 Backfill for Appurtenances
3.3 SPECIAL REQUIREMENTS
3.3.1 Water Lines
3.3.2 Electrical Distribution System
3.3.3 Gas Distribution
3.3.4 Plastic Marking Tape
3.4 FIELD TESTING CONTROL
3.4.1 In-Place Densities
3.4.2 Moisture-Density Relationships
3.4.3 Gradation, Atterberg Limits, and Classification
3.4.4 Miscellaneous Testing
3.4.5 Testing Schedule

3.5 Displacement of Sewers

-- End of Section Table of Contents --

SECTION 02222

EXCAVATION, TRENCHING, AND BACKFILLING FOR UTILITIES SYSTEMS

PART 1 GENERAL

1.1 SCOPE OF WORK

This section specifies all earthwork for underground utilities systems under open areas, buildings, and pavement sections.

1.2 REFERENCES

The publications listed below form a part of this specification to the extent referenced. The publications are referred to in the text by basic designation only.

AMERICAN CONCRETE INSTITUTE

ACI 229R	(1994) Controlled Low Strength Materials

AMERICAN SOCIETY FOR TESTING AND MATERIALS (ASTM)

ASTM C 33	(1993) Concrete Aggregates
ASTM C 39	(1986) Compressive Strength of Cylindrical Concrete Specimens
ASTM C 117	(1990) Materials Finer Than 75-um (No.200) Sieve in Mineral Aggregates by Washing
ASTM C 136	(1993) Sieve Analysis of Fine and Coarse Aggregates
ASTM D 422	(1963; R 1990) Particle-Size Analysis of Soils
ASTM D 1556	(1990) Density and Unit Weight of Soil in Place by the Sand-Cone Method
ASTM D 1557	(1991) Laboratory Compaction Characteristics of Soil Using Modified Effort (56,000 ft-lbf/cu. ft. (2,700 kN-m/cu. m.))
ASTM D 2216	(1992) Laboratory Determination of Water (Moisture) Content of Soil, and Rock
ASTM D 2217	(1985) Wet Preparation of Soil Samples for Particle Size Analysis and Determination of Soil Constants
ASTM D 2487	(1992;R 1993) Classification of Soils for Engineering Purposes (Unified Soil Classification System

ASTM D 2922	(1991) Density of Soil and Soil-Aggregate in Place by Nuclear Methods (Shallow Depth)
ASTM D 3017	(1988) Water Content of Soil and Rock in Place by Nuclear Methods (Shallow Depth)
ASTM D 3740	(1992) Minimum Requirements for Agencies Engaged in the Testing and/or Inspection of Soil and Rock as Used in Engineering Design and Construction
ASTM D 4318	(1984) Liquid Limit, Plastic Limit, and Plasticity Index of Soils

CORPS OF ENGINEERS, SACRAMENTO DISTRICT (COE)

CESPK PAM 415-1-2	(1989) Construction Control Manual

1.3 DEFINITIONS

1.3.1 Degree of Compaction

Degree of compaction is the ratio of the field dry density to the maximum dry density determined in the laboratory, expressed as a percentage of the maximum density. The field dry density shall be determined by ASTM D 1556, and the laboratory maximum dry density shall be determined by ASTM D 1557, Procedure C.

1.3.2 Soil Classification Testing

Tests shall be performed by the Contractor for the determination of satisfactory material in accordance with CESPK PAM 415-1-2, the Construction Control Manual. Certified test reports shall be furnished to the Contracting Officer for approval prior to use of the material. Materials shall be classified in accordance with ASTM D 2487. Gradations shall be determined in accordance with ASTM C 117 and ASTM C 136. Atterberg Limits shall be determined in conformance with ASTM D 4318, method A on samples prepared in accordance with ASTM D 2217.

1.3.3 Moisture Content

Moisture content is the ratio of the weight of the water to the weight of the solid matter expressed as a percentage and is determined by ASTM D 2216.

1.4 SUBMITTALS

Government approval is required for submittals with a "GA" designation; submittals having an "FIO" designation are for information only. The following shall be submitted in accordance with Section 01300 SUBMITTAL PROCEDURES:

SD-09 Reports

Field Testing Control; FIO. Initial Backfill Materials; GA.

All laboratory and field tests conducted in accordance with paragraph FIELD

TESTING CONTROL. Test reports and analyses certifying that the materials proposed for use at the project site conform to the specified requirements.

PART 2 PRODUCTS

2.1 MATERIALS

2.1.1 Satisfactory Materials

Satisfactory material shall classify according to ASTM D 2487 as GW, GP, GC, GM, SW, SP, SC, SM, ML, CL and combinations of these such as SP-SM. In addition, satisfactory material shall be free of cobbles and debris and not exceed more than 2% organics.

Native soils excavated within the project limits which are satisfactory may be used for final backfill in utility trenches.

2.1.2 Unsatisfactory Materials

Materials which do not comply with the requirements for satisfactory materials are unsatisfactory. Materials classified in accordance with ASTM D 2487 as CH, MH, Pt, OH, and OL are unsatisfactory.

2.1.2.1 Unstable Materials

Unstable Material is that material that cannot be properly compacted or will not support construction equipment due to excess moisture. Potentially unstable materials are soils with natural moisture contents near or above the plastic limit as determined by ASTM D 4318 or 5 or more percent above the ASTM D 1557 optimum moisture content. Unstable materials are also indicated by waving, rutting, and shoving under the wheels and rollers of construction equipment.

2.1.3 Initial Backfill Materials

Initial backfill material shall consist of the material specified by the conduit or coating manufacturer for the particular trench configuration and loading condition. In the absence of a conduit or coating manufacturer's specifications, initial backfill shall consist of select granular material, controlled low strength material or sand. Select granular material shall be used for bridging and general bedding and initial backfill. Controlled low strength material shall be used for bridging and bedding and initial backfill under heavily loaded areas and buildings. Sand shall be used as bedding and initial backfill for conduits that are coated for corrosion protection.

2.1.3.1 Select Granular Material

Select granular material shall consist of well-graded sand, gravel, crushed gravel, crushed stone or crushed slag composed of hard, tough and durable particles, and shall contain not more than 10 percent by weight of material passing the number 200 sieve and no less than 95 percent by weight passing the 25.4 mm sieve. The maximum allowable aggregate size shall be 50 mm, or the maximum size recommended by the pipe manufacturer, whichever is smaller.

2.1.3.2 Controlled Low Strength Material

Controlled low strength material (CLSM) shall meet the requirements specified in ACI 229R and shall consist of a lean concrete slurry of type

II portland cement blended with size 7 concrete coarse rounded aggregate conforming to the requirements specified in ASTM C 33. Controlled low strength material shall have a 28-day compressive strength of between 550 and 1100 kPa when tested in accordance with ASTM C 39.

2.1.3.3 Sand

Sand shall conform to ASTM C 33 requirements for concrete fine aggregate. Additionally, sand shall have an in place water content of less than 7 percent as determined by ASTM D 2216.

2.1.4 Plastic Marking Tape

Plastic marking tape shall be acid and alkali-resistant polyethylene film, 150 mm wide with minimum thickness of 0.10 mm. Tape shall have a minimum strength of 12.1 MPa lengthwise and 10.3 MPa crosswise. The tape shall be manufactured with integral wires, foil backing or other means to enable detection by a metal detector when the tape is buried up to 1 meter deep. The tape shall be of a type specifically manufactured for marking and locating underground utilities. The metallic core of the tape shall be encased in a protective jacket or provided with other means to protect it from corrosion. Tape color shall be as specified in TABLE 1 and shall bear a continuous printed inscription describing the specific utility.

TABLE 1. Tape Color

Red:	Electric
Yellow:	Gas, Oil, Dangerous Materials
Orange:	Telephone, Telegraph, Television, Police, and Fire Communications
Blue:	Water Systems
Green:	Sewer Systems

PART 3 EXECUTION

3.1 EXCAVATION

Excavation shall be performed to the lines and grades indicated. Rock excavation shall include removal and disposition of material defined as rock in paragraph MATERIALS. During excavation, material satisfactory for backfilling shall be stockpiled in an orderly manner at a distance from the banks of the trench equal to 1/2 the depth of the excavation, but in no instance closer than 600 mm.Excavated material not required or not satisfactory for backfill shall be removed from the site and shall be disposed of by the Contractor off of Government-controlled land prior to the completion of construction. Grading shall be done as may be necessary to prevent surface water from flowing into the excavation, and any water accumulating therein shall be removed to maintain the stability of the bottom and sides of the excavation. No additional compensation shall be forthcoming for the excavation and replacement of materials from unauthorized overexcavation or materials rendered unsatisfactory by Contractor managed operations. No additional compensation shall be forthcoming for material excavation and replacement due to the Contractor's failure to protect, drain, or dewater the project site. A change in the Contract price shall be considered for incidents where (in the interpretation of the Contracting Officer) where unsatisfactory materials

are not the result of Contractor managed operations and are encountered at depths and/or locations that are substantially different from those shown on the Contract Exploration Logs.

3.1.1 Trench Excavation

The trench shall be excavated as recommended by the manufacturer of the conduit to be installed. Trench walls below the top of the pipe shall be sloped, or made vertical, and of such width as recommended in the manufacturer's installation manual. Where no manufacturer's installation manual is available, trench walls shall be made vertical. Trench walls more than 1.5 meters high shall be shored, cut back to a stable slope, or provided with equivalent means of protection for employees who may be exposed to moving ground or cave in. Vertical trench walls more than 1.5 meters high shall be shored. Trench walls which are cut back shall be excavated to at least the angle of repose of the soil. Special attention shall be given to slopes which may be adversely affected by weather or moisture content. Trenches shall be be excavated to the width specified by the conduit manufacturer for the particular depth and loading condition. In the absence of manufacturer specifications the trench shall be excavated to provide a clearance of 75 to 150 mm between the trench wall and the in place conduit. Where recommended trench widths are exceeded, redesign, stronger pipe, or special installation procedures shall be utilized by the Contractor. The cost of redesign, stronger pipe, or special installation procedures shall be borne by the Contractor without any additional cost to the Government. All trench walls shall be in compliance with the Corps of Engineers Safety and Health Requirements Manual, EM 385-1-1.

3.1.1.1 Bottom Preparation

The bottoms of trenches shall be accurately graded to provide uniform bearing and support for the bottom of each section of the conduit. Stones that are 75 mm or greater in any dimension, or as recommended by the pipe manufacturer, shall be removed to prevent point bearing. Excavation shall be deep enough to provide clearance between the trench and conduit bottoms for the bedding.

3.1.1.2 Removal of Unyielding Material

Where unyielding material is encountered in the bottom of the trench, such material shall be removed to the depth required to provide sufficient clearance for the conduit bedding.

3.1.1.3 Removal of Unstable Material

Where unstable material is encountered in the bottom of the trench, such material shall be removed to the depth directed and replaced to the proper grade or bridged with select granular material or controlled low strength material as directed.

3.1.1.4 Excavation for Appurtenances

Excavation for manholes, catch-basins, inlets, or similar structures shall be of sufficient size to permit the placement and removal of forms for the full length and width of structure footings and foundations as shown. Rock shall be cleaned of loose debris and cut to a firm surface either level, stepped, or serrated, as shown or as directed. Loose disintegrated rock and thin strata shall be removed. Removal of unstable material shall be as

specified above. When concrete or masonry is to be placed in an excavated area, special care shall be taken not to disturb the bottom of the excavation. Excavation to the final grade level shall not be made until just before the concrete or masonry is to be placed.

3.1.1.5 Jacking, Boring, and Tunneling

Unless otherwise indicated, excavation shall be by open cut except that sections of a trench may be jacked, bored, or tunneled if, in the opinion of the Contracting Officer, the pipe, cable, or duct can be safely and properly installed and backfill can be properly compacted in such sections. The Contractor shall vertically and horizontally locate all underground utilities in the vicinity of the operation and shall repair any broken or damaged utilities or pavements at no cost to the Government. The Contractor shall obtain all permits and clearances for the operation. All excavations shall be completely backfilled, compacted, and graded upon completion of testing.

3.1.1.6 Stockpiles

Stockpiles of satisfactory, unsatisfactory, and waste materials shall be placed and graded as specified. Stockpiles shall be kept in a neat and well drained condition, giving due consideration to drainage at all times. The ground surface at stockpile locations shall be cleared, grubbed, and sealed by rubber-tired equipment, excavated satisfactory and unsatisfactory materials shall be separately stockpiled. Stockpiles of satisfactory materials shall be protected from contamination which may destroy the quality and fitness of the stockpiled material. If the Contractor fails to protect the stockpiles, and any material becomes unsatisfactory, such material shall be removed and replaced with satisfactory material from approved sources at no additional cost to the Government. Locations of stockpiles of satisfactory materials shall be subject to prior approval of the Contracting Officer.

3.2 BACKFILLING AND COMPACTION

Backfill material shall consist of satisfactory material and initial backfill material as required. Backfill shall be placed in layers not exceeding 100 mm loose thickness for compaction by hand operated machine compactors, and 200 mm loose thickness for other than hand operated machines, unless otherwise specified. Each layer shall be compacted to densities specified hereinafter.

3.2.1 Trench Backfill

Trenches shall be backfilled to the grade shown. The trench shall be backfilled to 0.6 meters above the top of pipe prior to performing the required pressure tests. The joints and couplings shall be left uncovered during the pressure test and thrust blocks shall be allowed to cure for 48 hours prior to testing. Backfilling shall not be completed until all specified tests are performed and passed.

3.2.1.1 Replacement of Unyielding Material

Unyielding material removed from the bottom of the trench shall be replaced with select granular material or initial backfill material.

3.2.1.2 Replacement of Unstable Material

Unstable material removed from the bottom of the trench or excavation shall be replaced or bridged with select granular material or controlled low strength material as directed.

3.2.1.3 Bedding and Initial Backfill

Bedding shall consist of initial backfill material placed to the thickness shown. Care shall be taken to ensure thorough compaction of the bedding under the haunches of the pipe. Initial backfill material shall be placed and compacted with approved tampers to a height of at least one foot above the utility pipe or conduit. The backfill shall be brought up evenly on both sides of the pipe for the full length of the pipe. Initial backfill shall be placed in 100 mm loose lifts, each lift compacted with an approved hand-operated vibratory plate-type compactor until no additional surface elevation changes occur.

3.2.1.4 Final Backfill

The remainder of the trench, except for special materials for roadways, shall be filled with satisfactory material. Placed conduits shall be protected from crushing by construction vehicles during subsequent construction operations. The Contractor shall repair damaged lines at no additional cost to the Government. Backfill material shall be placed and compacted as follows:

a. Under Buildings: Backfill shall be placed and compacted to a minimum of 95 percent of the maximum laboratory dry density, full depth. Water flooding or jetting methods of compaction will not be permitted.

b. Pavements, Sidewalks, Turfed or Seeded Areas and Miscellaneous Areas: Backfill shall be deposited and compacted to 95 percent of the maximum laboratory dry density, except that the top 150 mm in landscaped areas shall be compacted to 85 percent. Compaction by water flooding or jetting will not be permitted. This requirement shall also apply to all other areas not specifically designated above.

3.2.2 Backfill for Appurtenances

Appurtenant structures shall be backfilled with satisfactory material. After the manhole, catch basin, inlet, or similar structure has been constructed and the concrete has been allowed to cure for 7 days, backfill shall be placed in such a manner that the structure will not be damaged by the shock of falling earth. The backfill material shall be deposited and compacted as specified for final backfill, and shall be brought up evenly on all sides of the structure to prevent eccentric loading and excessive stress.

3.3 SPECIAL REQUIREMENTS

Special requirements for both excavation and backfill relating to the specific utilities are as follows:

3.3.1 Water Lines

Trench to the depth that provides a minimum cover of 900 mm from the existing ground surface, or from the indicated finished grade, whichever is lower, to the top of the pipe.

3.3.2 Electrical Distribution System

Direct burial cable and conduit or duct line shall have a minimum cover of 600 mm from the finished grade, unless otherwise indicated. Special trenching requirements for direct-burial electrical cables and conduits are specified in Section 16375 ELECTRICAL DISTRIBUTION SYSTEM, UNDERGROUND.

3.3.3 Gas Distribution

Trenched shall be excavated to a depth that will provide not less than 600 mm of cover. Trenches shall be graded as specified for pipe-laying requirements in Section 02685 GAS DISTRIBUTION SYSTEM.

3.3.4 Plastic Marking Tape

Warning tapes shall be installed directly above the pipe, at a depth of 450 mm below finished grade unless otherwise shown.

3.4 FIELD TESTING CONTROL

Testing shall be the responsibility of the Contractor and shall be performed at no additional cost to the Government. Testing shall be performed by an approved commercial testing laboratory subject to approval and meeting the requirements specified in ASTM D 3740.

3.4.1 In-Place Densities

Field in-place density shall be determined in accordance with ASTM D 1556 or ASTM D 2922. When ASTM D 2922 is used, the calibration curves shall be checked and adjusted if necessary by the procedure described in ASTM D 2922, paragraph ADJUSTING CALIBRATION CURVE. ASTM D 2922 results in a wet unit weight of soil and when using this method ASTM D 3017 shall be used to determine the moisture content of the soil. The calibration curves furnished with the moisture gauges shall also be checked along with density calibration checks as described in ASTM D 3017. Calibration checks, using ASTM D 1556 and ASTM D 2216, for both the density and moisture gauges shall be made at the beginning of a job and on each different type of material encountered; a minimum one calibration check shall be performed for each set of five nuclear compaction tests.

3.4.2 Moisture-Density Relationships

Moisture-density relationships shall be determined by the test method outlined in ASTM D 1557, Procedure C.

3.4.3 Gradation, Atterberg Limits, and Classification

Gradation testing aggregates shall be performed by the test method outlined in ASTM C 136. Gradation testing for soil materials shall be performed in accordance with ASTM D 422. Atterberg limits shall be determined by ASTM D 4318. Classification shall be determined by the test method outlined in ASTM D 2487.

3.4.4 Miscellaneous Testing

Sieve size analysis for capillary select granular material, sand, and controlled low-strength material aggregate shall be performed in accordance with ASTM C 136.

3.4.5 Testing Schedule

The following number of tests, if performed at the appropriate time, shall be the minimum acceptable for each type operation.

(a) Field Density and Moisture Content: For utility trenches, perform one test for each lift or each increment or fraction of 60 meters. For isolated utility appurtenances, one random test during backfilling operations at each location.

(b) Moisture-Density Relationship with Gradation, Atterberg Limits, and Classification: From a bulk sample; one set of tests for every 5 field density tests (with not less than 1 test for each type of material) for the first 25 field density tests. Thereafter, one additional test for each change in material.

(c) Miscellaneous Granular Materials: For select granular material and controlled low-strength material aggregate; perform a minimum of two random sieve size analyses for each material source. Perform a minimum of two sieve size analyses and two water content tests for in place sand, if used for bedding and initial backfill. A minimum of two compressive strength tests shall be performed for each source of controlled low strength material.

3.5 Displacement of Sewers

After other required tests have been performed and the trench backfill compacted to 0.6 meters above the top of the pipe, the pipe shall be inspected to determine whether significant displacement has occurred. This inspection shall be conducted in the presence of the Contracting Officer. Pipe sizes larger than 900 mm shall be entered and examined. Pipe shall be inspected by shining a light or laser between manholes or manhole locations, or by the use of television cameras passed through the pipe. If, in the judgement of the Contracting Officer, the interior of the pipe shows poor alignment or any other defects that would cause improper functioning of the system, the defects shall be remedied as directed at no additional cost to the Government.

-- End of Section --

SECTION TABLE OF CONTENTS

DIVISION 02 - SITE WORK

SECTION 02225

EARTHWORK FOR ROADWAYS

PART 1 GENERAL

1.1 SCOPE OF WORK
1.2 REFERENCES
1.3 DEFINITIONS
1.3.1 Degree of Compaction
1.3.2 Soil Classification Testing
1.3.3 Moisture Content
1.4 SUBMITTALS
1.5 SUBSURFACE DATA

PART 2 PRODUCTS

2.1 MATERIALS
2.1.1 Satisfactory Material
2.1.2 Unsatisfactory Materials
2.1.2.1 Unstable Materials
2.2 BORROW MATERIAL
2.2.1 Selection
2.2.2 Select Material
2.2.3 Bridging Material

PART 3 EXECUTION

3.1 EXCAVATION
3.2 DITCHES, GUTTERS, AND CHANNEL CHANGES
3.3 BACKFILL ADJACENT TO STRUCTURES
3.4 PREPARATION OF GROUND SURFACE FOR FILL
3.5 FILLS AND EMBANKMENTS
3.6 COMPACTION
3.7 FINISHED EXCAVATION, FILLS, AND EMBANKMENTS
3.8 FIELD TESTING CONTROL
3.8.1 Field Density with Moisture Content
3.8.2 Moisture-Density Relationships
3.8.3 Gradations, Atterberg Limits, and Classification
3.8.4 Testing Schedule
3.9 PROTECTION

-- End of Section Table of Contents --

SECTION 02225

EARTHWORK FOR ROADWAYS

PART 1 GENERAL

1.1 SCOPE OF WORK

This Section specifies earthwork for paved areas and open or landscaped areas. All utility earthwork is specified under Section 02222 EXCAVATION, TRENCHING, AND BACKFILLING FOR UTILITIES SYSTEMS.

1.2 REFERENCES

The publications listed below form a part of this specification to the extent referenced. The publications are referred to in the text by basic designation only.

AMERICAN SOCIETY FOR TESTING AND MATERIALS (ASTM)

ASTM C 117	(1990) Materials Finer Than 75-um (No.200) Sieve in Mineral Aggregates by Washing
ASTM C 131	(1989) Resistance to Degradation of Small-Size Coarse Aggregate by Abrasion and Impact in the Los Angeles Machine
ASTM C 136	Sieve Analysis of Fine and Coarse Aggregates
ASTM D 422	(1963; R 1990) Particle-Size Analysis of Soils
ASTM D 1556	(1990) Density and Unit Weight of Soil in Place by the Sand-Cone Method
ASTM D 1557	(1991) Laboratory Compaction Characteristics of Soil Using Modified Effort (56,000 ft-lbf/cu. ft. (2,700 kN-m/cu.m.))
ASTM D 2216	(1992) Laboratory Determination of Water(Moisture) Content of Soil, Rock, and Soil-Aggregate Mixtures
ASTM D 2217	(1985) Wet Preparation of Soil Samples for Particle Size Analysis and Determination of Soil Constants
ASTM D 2487	(1992;R 1993) Classification of Soils for Engineering Purposes (Unified Soil Classification System)
ASTM D 2922	(1991) Density of Soil and Soil-Aggregate in Place by Nuclear Methods (Shallow Depth)

ASTM D 3017	(1988) Water Content of Soil and Rock in Place by Nuclear Methods (Shallow Depth)
ASTM D 3740	(1992) Minimum Requirements for Agencies Engaged in the Testing and/or Inspection of Soil and Rock as Used in Engineering Design and Construction
ASTM D 4318	(1984) Liquid Limit, Plastic Limit, and Plasticity Index of Soils
ASTM E 329	(1991) Agencies Engaged in the Testing and/or Inspection of Materials Used in Construction

CORPS OF ENGINEERS, SACRAMENTO DISTRICT (COE)

CESPK PAM 415-1-2	(1989) Construction Control Manual

1.3 DEFINITIONS

1.3.1 Degree of Compaction

Degree of compaction is the ratio of the field dry density to the maximum dry density determined in the laboratory, expressed as a percentage of the maximum density. The field dry density shall be determined by ASTM D 1556, and the laboratory maximum dry density shall be determined by ASTM D 1557, Procedure C.

1.3.2 Soil Classification Testing

Tests shall be performed by the Contractor for the determination of satisfactory material in accordance with CESPK PAM 415-1-2, the Construction Control Manual. Certified test reports shall be furnished to the Contracting Officer for approval prior to use of the material. Materials shall be classified in accordance with ASTM D 2487. Gradations shall be determined in accordance with ASTM C 117 and ASTM C 136. Atterberg Limits shall be determined in conformance with ASTM D 4318, method A on samples prepared in accordance with ASTM D 2217.

1.3.3 Moisture Content

Moisture content is the ratio of the weight of the water to the weight of the solid matter expressed as a percentage and is determined by ASTM D 2216.

1.4 SUBMITTALS

Government approval is required for submittals with a "GA" designation; submittals having an "FIO" designation are for information only. The following shall be submitted in accordance with Section 01300 SUBMITTAL PROCEDURES:

SD-08 Statements

Field Testing Control; GA.

Qualifications of the commercial testing laboratory who will be performing

all testing in accordance with paragraph FIELD TESTING CONTROL.

SD-09 Reports

Select Material; GA. Bridging Material; GA.

Certified test reports and analysis certifying that the select material and the bridging material proposed for use at the project site conform to the specified requirements.

SD-09 Reports.

Field Testing Control; FIO.

All tests conducted in accordance with paragraph FIELD TESTING CONTROL.

1.5 SUBSURFACE DATA

Subsurface soil exploration logs are shown on the drawings. The data represent the best subsurface information available; however, variations may exist across the building site.

PART 2 PRODUCTS

2.1 MATERIALS

2.1.1 Satisfactory Material

Satisfactory material shall classify according to ASTM D 2487 as GW, GP, GC, GM, SW, SP, SC, SM, ML, CL and combinations of these such as SP-SM. In addition, satisfactory material shall be free of cobbles and debris and not exceed more than 2% organics.

Native soils excavated within the project limits which are satisfactory may be used for subgrade fill below the pavement base course.

2.1.2 Unsatisfactory Materials

Materials which do not comply with the requirements for satisfactory materials are unsatisfactory. Materials classified in accordance with ASTM D 2487 as CH, MH, Pt, OH, and OL are unsatisfactory.

2.1.2.1 Unstable Materials

Unstable Material is that material that cannot be properly compacted or will not support construction equipment due to excess moisture. Potentially unstable materials are soils with natural moisture contents near or above the plastic limit as determined by ASTM D 4318 or 5 or more percent above the ASTM D 1557 optimum moisture content. Unstable materials are also indicated by waving, rutting, and shoving under the wheels and rollers of construction equipment.

2.2 BORROW MATERIAL

Borrow material shall be selected to meet requirements and conditions of the particular fill for which it is to be used.

2.2.1 Selection

Borrow material shall be obtained from sources outside the limits of

Government property and is subject to approval by the Contracting Officer. The source of the material shall be the Contractor's responsibility. Unless otherwise provided in the contract, the Contractor shall obtain from the owners of the borrow pit the right to procure material, shall pay all royalties and other expenses involved, and shall develop the source, including rights-of-way for hauling.

2.2.2 Select Material

Select material shall be free of organics and debris and shall conform to the following gradation and Atterberg Limits:

Sieve Size	Percent Passing by Weight
51-mm	100
No. 4	50-90
No. 200	5-35

Liquid Limit of less than 35.
Plasticity Index of less than 12.

2.2.3 Bridging Material

Bridging material for stabilizing unstable areas shall:

A. Be hard and durable.

B. Have a percentage of wear not to exceed 50 after 500 revolutions according to ASTM C 131.

C. Be well graded.

D. Have the following gradation:

Sieve Size	Percent by Weight Passing
75 mm	100
25 mm	30-50
No. 4	10-30
No. 40	0-10

PART 3 EXECUTION

3.1 EXCAVATION

Excavation of every description, regardless of material encountered, within the grading limits of the project shall be performed to the lines and grades indicated. Satisfactory excavation material shall be transported to and placed in fill areas within the limits of the work. All unsatisfactory material which does not contain stripping and construction debris, which is clean fill, and surplus satisfactory material shall be spread out in a uniform thin layer outside of the project limits. All construction debris and stripping shall be removed from Government-controlled land, at the Contractor's expense, prior to the completion of construction. In the event that it is necessary to remove unsatisfactory material to a depth greater than specified, the Contracting Officer shall be notified. No additional compensation shall be forthcoming for the excavation and replacement of materials rendered unsatisfactory by Contractor managed operations. A change in the Contract price shall be considered for incidents where (in the interpretation of the Contracting Officer) unsatisfactory materials are encountered at depths and/or locations that are substantially different from those shown on the Contract Exploration Logs. Excavations carried below the depths indicated, without specific

directions, shall be refilled to the proper grade with properly compacted satisfactory material at the Contractor's expense. Excavation and filling shall be performed in a manner and sequence that will provide drainage at all times. Excavations shall be kept free from water while construction therein is in progress.

3.2 DITCHES, GUTTERS, AND CHANNEL CHANGES

Ditches, gutters, and channel changes shall be cut accurately to the cross sections and grades indicated. All roots, stumps, rock, and foreign matter in the sides and bottom of ditches, gutters, and channel changes shall be trimmed and dressed or removed to conform to the slope, grade, and shape of the section indicated. Care shall be taken not to excavate ditches and gutters below the grades indicated. Excessive ditch and gutter excavation shall be backfilled to grade either with satisfactory, thoroughly compacted material or with suitable stone or cobble to form an adequate gutter paving as directed. All ditches and gutters excavated under this section shall be maintained until final acceptance of the work. Satisfactory material excavated from ditches and channel changes may be placed in fill areas. Unsatisfactory and excess excavated material shall be disposed of in accordance with directions in paragraph EXCAVATION. No excavated material shall be deposited closer to the edges of the ditches than indicated and in no case less than 1 meter.

3.3 BACKFILL ADJACENT TO STRUCTURES

Backfill adjacent to structures shall be placed and compacted uniformly in such manner as to prevent wedging action or eccentric loading upon or against the structures. Slopes bounding or within areas to be backfilled shall be stepped or serrated to prevent sliding of the fill. During backfilling operations and in the formation of embankments, equipment that will overload the structure in passing over and compacting these fills shall not be used. Backfill for storm drains and subdrains, including the bedding and backfill for structures other than culverts and drains, shall conform to the additional requirements in other applicable sections.

3.4 PREPARATION OF GROUND SURFACE FOR FILL

All vegetation, such as roots, brush, grass, and all decayed vegetable matter, rubbish, and other unsatisfactory material within the area upon which fill is to be placed, shall be stripped or otherwise removed before the fill is started. In no case will unsatisfactory material remain in the upper 150 mm of the subgrade of the fill area. Sloped ground surfaces steeper than one vertical to four horizontal on which fill is to be placed shall be plowed, stepped, or broken up, as directed, in such manner that the fill material will bond with the existing surface. Prepared surfaces on which compacted fill is to be placed shall be wetted or dried as may be required to obtain the specified moisture content and density.

3.5 FILLS AND EMBANKMENTS

Fills and embankments shall be constructed at the locations and to lines and grades indicated. The completed fill shall conform to the shape of the typical sections indicated or shall meet the requirements of the particular case. Satisfactory material obtained during excavation may be used in forming required fill. Fills shall be constructed of satisfactory material free from roots and other organic material, and trash. The material shall be placed in successive horizontal layers of 200 mm in loose depth for the full width of the cross section and shall be compacted as specified. Each

layer shall be compacted and tested before the overlaying lift is placed. Moisture content of the fill or backfill material shall be adjusted by wetting or aerating, as required, to within plus or minus 2 percent of optimum moisture content as determined from laboratory tests specified in paragraph DEFINITIONS.

3.6 COMPACTION

Each layer of the fill or embankment for open areas shall be compacted to at least 95 percent. Areas to be paved shall be compacted to at least 95 percent of the laboratory maximum dry density. The moisture content shall be within 2 percent of the optimum water content.

3.7 FINISHED EXCAVATION, FILLS, AND EMBANKMENTS

All areas covered by the project, including excavated and filled sections and adjacent transition areas, shall be uniformly smooth-graded. The finished surface shall be reasonably smooth, compacted, and free from irregular surface changes. The degree of finish shall be that ordinarily obtainable from blade-grader operations, except as otherwise specified. Ditches and gutters shall be finished to permit adequate drainage. The surface of areas to be turfed shall be finished to a smoothness suitable for the application of turfing materials. For subgrade areas to be paved, the following shall be accomplished as required: (a) soft or otherwise unsatisfactory material shall be replaced with satisfactory excavated material or other approved materials; (b) rock encountered in the cut sections shall be excavated to a depth of 150 mm below the finished grade elevation; (c) low areas resulting from removal of unsatisfactory material or from excavation of rock shall be brought up to required grade with satisfactory materials, and the entire subgrade shall be shaped to line, grade, and cross section and shall be compacted as specified. The surface of building pads and paved areas on which a base course is to be placed shall vary not more than 15 mm from the established grade and approved cross section. Other surfaces shall be finished not more than 30 mm above or below the established grade or approved cross section.

3.8 FIELD TESTING CONTROL

Contractor quality control testing shall be performed in accordance with the Construction Control Manual, CESPK PAM 415-1-2. Testing shall be the responsibility of the Contractor and shall be performed by an independent commercial testing laboratory in accordance with Construction Control Manual. Approval of testing facilities shall be based on compliance with ASTM E 329 and ASTM D 3740, and work requiring testing will not be permitted until approved by the Contracting Officer. All field density test results shall be reported in writing to the Contracting Officer no later than close of business the day following the test completion date.

3.8.1 Field Density with Moisture Content

Field in-place density shall be determined in accordance with ASTM D 1556 or ASTM D 2922. When ASTM D 2922 is used, the calibration curves shall be checked, and adjusted if necessary, using the sand cone method as described in paragraph Calibration of the ASTM publication. When ASTM D 2922 is used, the Contractor shall obtain all required clearances and permits for the use of nuclear test methods. ASTM D 2922 results in a wet unit weight of soil and when using this method, ASTM D 3017 shall be used to determine the moisture content of the soil. The calibration curves furnished with the moisture gauges shall be checked along with density calibration checks

as described in ASTM D 3017. The calibration checks, using ASTM D 1556 and ASTM D 2216, for both the density and moisture gauges shall be made at the beginning of a job and on each different type of material encountered; a minimum one calibration check shall be performed for each set of five nuclear compaction tests.

3.8.2 Moisture-Density Relationships

Moisture-density relationships shall be determined by the test method outlined in ASTM D 1557, Procedure C.

3.8.3 Gradations, Atterberg Limits, and Classification

Gradation testing for soil materials shall be performed in accordance with ASTM D 422. Atterberg limits shall be determined by ASTM D 4318. Classification shall be determined by the test methods outlined ASTM D 2487.

3.8.4 Testing Schedule

Testing shall be as follows:

(a) Field Density with Moisture Content: For area fills, perform two tests per each increment or fraction of 1000 square meters placed during each 8 hour shift.

(b) Gradation with Atterberg Limits: From compacted material; one test for every 5 field density tests.

(c) Moisture-Density Relationship with Gradations, Atterberg Limits, and Classification: From a bulk sample; one set of tests for every 5 field density tests (with not less than one test for each type of material) for the first 25 field density tests. Thereafter, one additional test for each change in material.

3.9 PROTECTION

Newly graded areas shall be protected from traffic and from erosion, and any settlement or washing away that may occur from any cause, prior to acceptance, shall be repaired and grades re established to the required elevations and slopes. All work shall be conducted in accordance with the environmental protection requirements of the contract.

-- End of Section --

SECTION TABLE OF CONTENTS

DIVISION 02 - SITE WORK

SECTION 02230

CLEARING AND GRUBBING

PART 1 GENERAL

1.1 DEFINITIONS
1.1.1 Clearing
1.1.2 Grubbing

PART 2 PRODUCTS (Not Applicable)

PART 3 EXECUTION

3.1 CLEARING
3.2 GRUBBING
3.3 TREE REMOVAL
3.4 DISPOSAL OF MATERIALS
3.4.1 Materials Other Than Salable Timber

-- End of Section Table of Contents --

SECTION 02230

CLEARING AND GRUBBING

PART 1 GENERAL

1.1 DEFINITIONS

1.1.1 Clearing

Clearing shall consist of the felling, trimming, and cutting of trees into sections and the satisfactory disposal of the trees and other vegetation designated for removal, including down timber, snags, brush, and rubbish occurring in the areas to be cleared.

1.1.2 Grubbing

Grubbing shall consist of the removal and disposal of stumps, roots larger than 75 mm in diameter, and matted roots from the designated grubbing areas.

PART 2 PRODUCTS (Not Applicable)

PART 3 EXECUTION

3.1 CLEARING

Trees, stumps, roots, brush, and other vegetation in areas to be cleared shall be cut off flush with or below the original ground surface, except such trees and vegetation as may be indicated or directed to be left standing. Trees and vegetation to be left standing shall be protected from damage incident to clearing, grubbing, and construction operations by the erection of barriers or by such other means as the circumstances require. Clearing shall also include the removal and disposal of structures that obtrude, encroach upon, or otherwise obstruct the work.

3.2 GRUBBING

Material to be grubbed, together with logs and other organic or metallic debris not suitable for foundation purposes, shall be removed to a depth of not less than 455 mm below the original surface level of the ground in areas indicated to be grubbed and in areas indicated as construction areas under this contract, such as areas for buildings, and areas to be paved. Depressions made by grubbing shall be filled with suitable material and compacted to make the surface conform with the original adjacent surface of the ground.

3.3 TREE REMOVAL

Where indicated or directed, trees and stumps that are designated as trees shall be removed from areas outside those areas designated for clearing and grubbing. This work shall include the felling of such trees and the removal of their stumps and roots as specified in paragraph GRUBBING. Trees shall be disposed of as specified in paragraph DISPOSAL OF MATERIALS.

3.4 DISPOSAL OF MATERIALS

3.4.1 Materials Other Than Salable Timber

Logs, stumps, roots, brush, rotten wood, and other refuse from the clearing and grubbing operations shall be disposed of outside the limits of Government-controlled land at the Contractor's responsibility except when otherwise directed in writing. Such directive will state the conditions covering the disposal of such products and will also state the areas in which they may be placed.

-- End of Section --

SECTION TABLE OF CONTENTS

DIVISION 02 - SITE WORK

SECTION 02232

SUBBASE COURSE

PART 1 GENERAL

1.1 REFERENCES
1.2 DEFINITIONS
1.2.1 Subbase
1.2.2 Degree of Compaction
1.2.3 Moisture Content
1.3 SUBMITTALS
1.4 WEATHER LIMITATIONS
1.5 EQUIPMENT

PART 2 PRODUCTS

2.1 MATERIALS
2.1.1 Subbase Course

PART 3 EXECUTION

3.1 GENERAL REQUIREMENTS
3.2 STOCKPILING MATERIAL
3.3 PREPARATION OF UNDERLYING MATERIAL
3.4 GRADE CONTROL
3.5 MIXING AND PLACING MATERIALS
3.6 LAYER THICKNESS
3.7 COMPACTION
3.8 SMOOTHNESS TEST
3.9 THICKNESS CONTROL
3.10 FIELD TESTING CONTROL
3.10.1 Field Density with Moisture Content
3.10.2 Moisture-Density Relationships
3.10.3 Gradations and Atterberg Limits
3.10.4 Testing Schedule
3.10.4.1 Initial Tests
3.10.4.2 In-Place tests
3.11 MAINTENANCE

-- End of Section Table of Contents --

SECTION 02232

SUBBASE COURSE

PART 1 GENERAL

1.1 REFERENCES

The publications listed below form a part of this specification to the extent referenced. The publications are referred to in the text by basic designation only.

AMERICAN SOCIETY FOR TESTING AND MATERIALS (ASTM)

ASTM C 131	(1996) Resistance to Degradation of Small-Size Coarse Aggregate by Abrasion and Impact in the Los Angeles Machine
ASTM D 422	(1963; R 1990) Particle-Size Analysis of Soils
ASTM D 1556	(1990) Density and Unit Weight of Soil in Place by the Sand-Cone Method
ASTM D 1557	(1991) Laboratory Compaction Characteristics of Soil Using Modified Effort (56,000 ft-lbf/cu. ft. (2,700 kN-m/cu.m.))
ASTM D 2216	(1992) Laboratory Determination of Water(Moisture) Content of Soil, Rock, and Soil-Aggregate Mixtures
ASTM D 2922	(1991) Density of Soil and Soil-Aggregate in Place by Nuclear Methods (Shallow Depth)
ASTM D 3017	(1988; R 1993) Water Content of Soil and Rock in Place by Nuclear Methods (Shallow Depth)
ASTM D 4318	(1993) Liquid Limit, Plastic Limit, and Plasticity Index of Soils

CORPS OF ENGINEERS, SACRAMENTO DISTRICT (COE)

CESPK PAM 415-1-2	(1989) Construction Control Manual

1.2 DEFINITIONS

1.2.1 Subbase

Subbase as used herein is well graded, durable aggregate composed of gravel, sand and binder, uniformly moistened and mechanically stabilized by

compaction.

1.2.2 Degree of Compaction

Degree of compaction is the ratio of the field dry density to the maximum dry density determined in the laboratory, expressed as a percentage of the maximum density. The field dry density shall be determined by ASTM D 1556, and the laboratory maximum dry density shall be determined by ASTM D 1557, Procedure C.

1.2.3 Moisture Content

Moisture content is the ratio of the weight of the water to the weight of the solid matter expressed as a percentage and is determined by ASTM D 2216.

1.3 SUBMITTALS

Government approval is required for submittals with a "GA" designation; submittals having an "FIO" designation are for information only. The following shall be submitted in accordance with Section 01330 SUBMITTAL PROCEDURES:

SD-01 Data

Equipment; FIO.

List of proposed equipment to be used in performance of construction work, including descriptive data.

SD-09 Reports

Field Testing Control; FIO.

All tests conducted in accordance with paragraph FIELD TESTING CONTROL.

SD-09 Reports

Subbase Material; GA.

Certified test reports and analysis certifying that the subbase material proposed for use at the project site conforms to the specified requirements.

1.4 WEATHER LIMITATIONS

Construction shall be done when the atmospheric temperature is above 2 degrees C. When the temperature falls below 2 degrees C, the Contractor shall protect all completed areas by approved methods against detrimental effects of freezing. Completed areas damaged by freezing, rainfall, or other weather conditions shall be corrected to meet specified requirements.

1.5 EQUIPMENT

All plant, equipment, and tools used in the performance of the work will be subject to approval before the work is started and shall be maintained in satisfactory working condition at all times. The equipment shall be adequate and shall have the capability of producing the required compaction, meeting grade controls, thickness control, and smoothness requirements as set forth herein.

PART 2 PRODUCTS

2.1 MATERIALS

2.1.1 Subbase Course

Aggregates shall consist of crushed stone, gravel, sand, or other sound, durable, approved materials processed and blended or naturally combined. Aggregates shall be durable and sound, free from lumps and balls of clay, organic matter, objectionable coatings, and other foreign material. Material retained on the 4.75 mm sieve shall have a percentage of wear not to exceed 50 percent after 500 revolutions when tested as specified in ASTM C 131. Aggregate shall be reasonably uniform in density and quality. Aggregates shall have a maximum size of 75 mm and shall be within the limits specified as follows:

Sieve Designation	Allowable Percentage by Weight Passing Square-Mesh Sieve
4.75 mm(No. 4)	50-90
0.425 mm(No. 40)	10-40
0.075 mm(No. 200)	0-6

The portion of any blended component and of the completed course passing the 0.425 mm shall be either nonplastic or shall have a liquid limit not greater than 25 and a plasticity index not greater than 5.

PART 3 EXECUTION

3.1 GENERAL REQUIREMENTS

Adequate drainage shall be provided during the entire period of construction to prevent water from collecting or standing on the working area. Line and grade stakes shall be provided as necessary for control. Grade stakes shall be in lines parallel to the centerline of the area under construction and suitably spaced for string lining.

3.2 STOCKPILING MATERIAL

Aggregates shall be obtained from off-site sources.

3.3 PREPARATION OF UNDERLYING MATERIAL

Prior to constructing the subbase course, the subgrade shall be cleaned of all foreign substances. The surface shall meet specified compaction and surface tolerances. Ruts, or soft yielding spots, in the underlying courses, subgrade areas having inadequate compaction, and deviations of the surface from the specified requirements, shall be corrected by loosening and removing soft or unsatisfactory material and by adding approved material, reshaping to line and grade, and recompacting to specified density requirements. The finished underlying course shall not be disturbed by traffic or other operations and shall be maintained by the Contractor in a satisfactory condition until the subbase course is placed.

3.4 GRADE CONTROL

The finished and completed subbase course shall conform to the lines, grades, and cross sections shown. The lines, grades, and cross sections shown shall be maintained by means of line and grade stakes placed by the Contractor at the work site.

3.5 MIXING AND PLACING MATERIALS

The materials shall be mixed and placed to obtain uniformity of the subbase material at the water content specified. The Contractor shall make such adjustments in mixing or placing procedures or in equipment as may be directed to obtain the true grades, to minimize segregation and degradation, to reduce or accelerate loss or increase of water.

3.6 LAYER THICKNESS

The compacted thickness of the completed course shall be as indicated. When a compacted layer of 150 mm is specified, the material may be placed in a single layer; when a compacted thickness of more than 150 mm is required, no layer shall exceed 150 mm nor be less than 75 mm when compacted.

3.7 COMPACTION

Each layer of the subbase course shall be compacted as specified with approved compaction equipment. Water content shall be maintained during the compaction procedure to within plus or minus 2 percent of optimum water content, as determined from laboratory tests, as specified in paragraph FIELD TESTING CONTROL. In all places not accessible to the rollers, the mixture shall be compacted with hand-operated power tampers. Compaction shall continue until each layer is compacted through the full depth to at least 95 percent of laboratory maximum density. Any materials that are found to be unsatisfactory shall be removed and replaced with satisfactory subbase material or reworked, as directed, to meet the requirements of this specification.

3.8 SMOOTHNESS TEST

The surface of each layer shall not show deviations in excess of 10 mm when tested with a 3.6 m (12 foot) straightedge applied parallel with and at right angles to the centerline of the area to be paved. Deviations exceeding this amount shall be corrected by removing material, replacing with new material, or reworking existing material and compacting, as directed.

3.9 THICKNESS CONTROL

The completed thickness of the subbase course shall be in accordance with the thickness and grade indicated on the drawings. The thickness of each course shall be measured at intervals providing at least one measurement for each 400 square meters or part thereof of subbase course. The thickness measurement shall be made by test holes, at least 75 mm in diameter through the course. The completed subbase course shall not be more than 13 mm deficient in thickness nor more than 13 mm above or below the established grade. Where any of these tolerances are exceeded, the Contractor shall correct such areas by scarifying, adding new material of proper gradation or removing material, and compacting, as directed. Where the measured thickness is 13 mm or more thicker than shown, the course will be considered as conforming with the specified thickness requirements plus

13 mm. The average job thickness shall be the average of the job measurements as specified above but within 6 mm of the thickness shown.

3.10 FIELD TESTING CONTROL

Contractor quality control testing shall be performed in accordance with the Construction Control Manual, CESPK PAM 415-1-2. Testing shall be the responsibility of the Contractor and shall be performed by an independent commercial testing laboratory in accordance with Construction Control Manual. Approval of testing facilities shall be based on compliance with ASTM E 548 and ASTM D 3740, and work requiring testing will not be permitted until approved by the Contracting Officer. All field density test results shall be reported in writing to the Contracting Officer no later than close of business the day following the test completion date.

3.10.1 Field Density with Moisture Content

Field in-place density shall be determined in accordance with ASTM D 1556 or ASTM D 2922. When ASTM D 2922 is used, the calibration curves shall be checked, and adjusted if necessary, using the sand cone method as described in paragraph Calibration of the ASTM publication. When ASTM D 2922 is used, the Contractor shall obtain all required clearances and permits for the use of nuclear test methods. ASTM D 2922 results in a wet unit weight of soil and when using this method, ASTM D 3017 shall be used to determine the moisture content of the soil. The calibration curves furnished with the moisture gauges shall be checked along with density calibration checks as described in ASTM D 3017. The calibration checks, using ASTM D 1556 and ASTM D 2216, for both the density and moisture gauges shall be made at the beginning of a job and on each different type of material encountered; a minimum one calibration check shall be performed for each set of five nuclear compaction tests.

3.10.2 Moisture-Density Relationships

Moisture-density relationships shall be determined by the test method outlined in ASTM D 1557, Procedure C.

3.10.3 Gradations and Atterberg Limits

Gradation testing for subbase materials shall be performed in accordance with ASTM D 422. Atterberg limits shall be determined by ASTM D 4318.

3.10.4 Testing Schedule

3.10.4.1 Initial Tests

Approval of material: The source of the material shall be selected 30 days prior to the time the material will be required in the work. Approval of the materials will be based on tests for gradation, liquid limit, and plasticity index performed on samples taken from the completed and compacted subbase course. One of each of the following tests shall be performed on the proposed material prior to commencing construction to demonstrate that the proposed material meets all specified requirements prior to installation.

a. Sieve Analysis
b. Liquid limit, plasticity index, moisture-density relationship
c. Wear tests shall be made on subbase course material in conformance with ASTM C 131.

3.10.4.2 In-Place tests

Testing shall be as follows:

(a) Field Density with Moisture Content: For area fills, perform two tests per each increment or fraction of 1000 square meters placed during each 8 hour shift.

(b) Gradation with Atterberg Limits: From compacted material; one test for every 5 field density tests.

(c) Moisture-Density Relationship: From a bulk sample; one set of tests for every 5 field density tests (with not less than one test for each type of material) for the first 25 field density tests. Thereafter, one additional test for each change in material.

3.11 MAINTENANCE

The subbase course shall be maintained in a satisfactory condition until accepted.

-- End of Section --

SECTION TABLE OF CONTENTS

DIVISION 02 - SITE WORK

SECTION 02241

AGGREGATE BASE COURSE

PART 1 GENERAL

1.1 REFERENCES
1.2 DEFINITIONS
1.2.1 Aggregate Base
1.2.2 Degree of Compaction
1.2.3 Moisture Content
1.3 GENERAL
1.4 SUBMITTALS
1.5 WEATHER LIMITATIONS
1.6 PLANT, EQUIPMENT, MACHINES, AND TOOLS
1.6.1 General Requirements
1.6.2 Steel-Wheeled Rollers
1.6.3 Pneumatic-Tired Rollers
1.6.4 Mechanical Spreader
1.6.5 Sprinkling Equipment
1.6.6 Tampers
1.6.7 Straightedge
1.7 STOCKPILING MATERIALS
1.8 SAMPLING AND TESTING
1.8.1 General Requirements
1.8.2 Test Results
1.8.3 Sampling

PART 2 PRODUCTS

2.1 MATERIALS
2.1.1 Aggregates
2.1.1.1 Coarse Aggregate
2.1.2 Binder Material
2.1.3 Gradation

PART 3 EXECUTION

3.1 GENERAL REQUIREMENTS
3.2 STOCKPILING MATERIAL
3.3 PREPARATION OF UNDERLYING COURSE
3.3.1 General Requirements
3.3.2 Grade Control
3.4 INSTALLATION
3.4.1 Mixing and Placing
3.4.2 Edges of Base Course
3.4.3 Compaction
3.4.4 Layer Thickness
3.4.5 Finishing
3.4.5.1 Smoothness
3.4.5.2 Thickness Control
3.5 FIELD QUALITY CONTROL
3.5.1 Field Density With Moisture Content
3.5.2 Gradation With Atterberg Limits

3.5.3 Moisture-Density Relationship
3.5.4 Wear Tests
3.5.5 Smoothness
3.5.6 Thickness
3.6 TRAFFIC
3.7 MAINTENANCE
3.8 DISPOSAL OF UNSATISFACTORY MATERIALS

-- End of Section Table of Contents --

SECTION 02241

AGGREGATE BASE COURSE

PART 1 GENERAL

1.1 REFERENCES

The publications listed below form a part of this specification to the extent referenced. The publications are referred to in the text by basic designation only.

AMERICAN SOCIETY FOR TESTING AND MATERIALS (ASTM)

ASTM C 127	(1988) Specific Gravity and Absorption of Course Aggregate
ASTM C 128	(1988) Specific Gravity and Absorption of Fine Aggregate
ASTM C 131	(1989) Resistance to Degradation of Small-Size Coarse Aggregate by Abrasion and Impact in the Los Angeles Machine
ASTM C 136	(1992) Sieve Analysis of Fine and Coarse Aggregates
ASTM D 75	(1987; R 1992) Sampling Aggregates
ASTM D 422	(1963; R 1990) Particle-Size Analysis of Soils
ASTM D 1556	(1990) Density and Unit Weight of Soil in Place by the Sand-Cone Method
ASTM D 1557	(1991) Laboratory Compaction Characteristics of Soil Using Modified Effort (56,000 ft-lbf/cu. ft. (2,700 kN-m/cu. m.))
ASTM D 2216	(1992) Laboratory Determination of Water(Moisture) Content of Soil, Rock, and Soil-Aggregate Mixtures
ASTM D 2217	(1985) Wet Preparation of Soil Samples for Particle Size Analysis and Determination of Soil Constants
ASTM D 2922	(1991) Density of Soil and Soil-Aggregate in Place by Nuclear Methods (Shallow Depth)
ASTM D 3017	(1988) Water Content of Soil and Rock in Place by Nuclear Methods (Shallow Depth)
ASTM D 3740	(1992) Minimum Requirements for Agencies Engaged in the Testing and/or Inspection

	of Soil and Rock as Used in Engineering Design and Construction
ASTM D 4318	(1993) Liquid Limit, Plastic Limit, and Plasticity Index of Soils
ASTM E 11	(1987) Wire-Cloth Sieves for Testing Purposes

1.2 DEFINITIONS

1.2.1 Aggregate Base

Aggregate base as used herein is well graded, durable aggregate composed of gravel, sand and binder, uniformly moistened and mechanically stabilized by compaction.

1.2.2 Degree of Compaction

Degree of compaction is the ratio of the field dry density to the maximum dry density determined in the laboratory, expressed as a percentage of the maximum density. The field dry density shall be determined by ASTM D 1556, and the laboratory maximum dry density shall be determined by ASTM D 1557, Procedure C.

1.2.3 Moisture Content

Moisture content is the ratio of the weight of the water to the weight of the solid matter expressed as a percentage and is determined by ASTM D 2216.

1.3 GENERAL

The work specified herein consists of the construction of an aggregate base course. The work shall be performed in accordance with this specification and shall conform to the lines, grades, notes and typical sections shown in the plans. Sources of all materials shall be selected well in advance of the time that materials will be required in the work.

1.4 SUBMITTALS

Government approval is required for submittals with a "GA" designation; submittals having an "FIO" designation are for information only. The following shall be submitted in accordance with Section 01300 SUBMITTAL PROCEDURES:

SD-01 Data

Plant, Equipment, Machines, and Tools; FIO.

List of proposed equipment to be used in performance of construction work including descriptive data.

SD-09 Reports

Sampling and Testing; GA.

Approval of materials: certified copies of test results from samples shall

be submitted not less than 30 days before material is required for the work.

SD-09 Reports

Sampling and Testing; FIO. Field Quality Control; FIO.

Calibration curves and related test results prior to using the device or equipment being calibrated. Copies of field test results within 24 hours after the tests are performed. Field tests to be conducted at the frequencies specified.

1.5 WEATHER LIMITATIONS

Base shall not be constructed when the atmospheric temperature is less than 2 degrees C. Base shall not be constructed on subgrades or subbases that are frozen or contain frost. If the temperature falls below 2 degrees C, completed areas shall be protected against any detrimental effects of freezing.

1.6 PLANT, EQUIPMENT, MACHINES, AND TOOLS

1.6.1 General Requirements

Plant, equipment, machines, and tools used in the work shall be subject to approval and shall be maintained in satisfactory working condition at all times. Other compacting equipment may be used in lieu of that specified, where it can be demonstrated that the results are equivalent. The equipment shall be adequate and have the capability of producing the results specified.

1.6.2 Steel-Wheeled Rollers

Steel-wheeled rollers shall be the self-propelled type weighing not less than 9072 kg, with a minimum weight of 53 kg/cm width of rear wheel. Wheels of the rollers shall be equipped with adjustable scrapers. The use of vibratory rollers is optional.

1.6.3 Pneumatic-Tired Rollers

Pneumatic-tired rollers shall be loaded to weigh a minimum of 13,600 kg and have four or more tires. Tires shall be inflated to a minimum pressure of 1034 kPa. The loading shall be equally distributed to all wheels, and the tires shall be uniformly inflated. Towing equipment shall also be pneumatic-tired.

1.6.4 Mechanical Spreader

Mechanical spreader shall be self-propelled or attached to a propelling unit capable of moving the spreader and material truck. The device shall be steerable and shall have variable speeds forward and reverse. The spreader and propelling unit shall be carried on tracks, rubber tires, or drum-type steel rollers that will not disturb the underlying material. The spreader shall contain a hopper, an adjustable screed, and outboard bumper rolls and be designed to have a uniform, steady flow of material from the hopper. The spreader shall be capable of laying material without segregation across the full width of the lane to a uniform thickness and to a uniform loose density so that when compacted, the layer or layers shall conform to thickness and grade requirements indicated. The Contracting Officer may require a demonstration of the spreader prior to approving use

in performance of the work.

1.6.5 Sprinkling Equipment

Sprinkling equipment shall consist of tank trucks, pressure distributors, or other approved equipment designed to apply controlled quantities of water uniformly over variable widths of surface.

1.6.6 Tampers

Tampers shall be of an approved mechanical type, operated by either pneumatic pressure or internal combustion, and shall have sufficient weight and striking power to produce the compaction required.

1.6.7 Straightedge

The Contractor shall furnish and maintain at the site, in good condition, one 3 meter straightedge for each bituminous paver, for use in the testing of the finished surface. Straightedge shall be made available for Government use. Straightedges shall be constructed of aluminum or other lightweight metal and shall have blades of box or box-girder cross section with flat bottom reinforced to insure rigidity and accuracy. Straightedges shall have handles to facilitate movement on pavement.

1.7 STOCKPILING MATERIALS

Materials, including approved material available from excavation and grading, shall be stockpiled in the manner and at locations designated. Before stockpiling of material, storage sites shall be cleared, and sloped to drain. Materials obtained from different sources shall be stockpiled separately.

1.8 SAMPLING AND TESTING

1.8.1 General Requirements

Sample and test according to the Construction Control Manual except as specified herein. Sampling and testing shall be performed by an approved commercial testing laboratory subject to approval and meeting the requirements of ASTM D 3740. No work requiring testing shall be permitted until the facilities have been inspected and approved. The first inspection shall be at the expense of the Government. Cost incurred for any subsequent inspection required because of failure of the facilities to pass the first inspection will be charged to the Contractor. Tests shall be performed as specified herein after to insure that materials and compaction meet specified requirements.

1.8.2 Test Results

Copies of test results shall be furnished to the Contracting Officer within 24 hours of completion of tests. Results shall verify that materials comply with this specification. When a material source is changed, the new material will be tested for compliance. When deficiencies are found, the initial analysis shall be repeated and the material already placed shall be retested to determine the extent of unacceptable material. All in-place unacceptable material shall be replaced or modified as directed by the Contracting Officer.

1.8.3 Sampling

Aggregate samples for laboratory tests shall be taken in accordance with ASTM D 75.

PART 2 PRODUCTS

2.1 MATERIALS

2.1.1 Aggregates

Aggregates shall consist of crushed stone, crushed gravel, angular sand, or other approved material. Aggregates shall be durable and sound, free from lumps of clay, organic matter, objectionable coatings, and other foreign material. Material retained on a 4.75 mm sieve shall be known as coarse aggregate and that passing the 4.75 mm sieve shall be known as binder material.

2.1.1.1 Coarse Aggregate

Only one type of coarse aggregate shall be used on the project. Coarse aggregates, consisting of angular fragments of uniform density and quality, shall have a percentage of wear not to exceed 40 percent after 500 revolutions when tested in accordance with ASTM C 131. The amount of flat and elongated particles shall not exceed 30 percent. A flat particle is one having a ratio of width to thickness greater than 3, and an elongated particle is one having a ratio of length to width greater than 3.

a. Crushed Gravel: Crushed gravel shall be manufactured from gravel particles 50 percent of which by weight are retained on the maximum size gradation sieve specified.

b. Crushed Stone: Crushed stone retained on each sieve specified shall contain at least 50 percent by weight of crushed pieces having two or more freshly fractured faces with the area of each face being at least equal to 75 percent of the smallest midsectional area of the piece. When two fractures are adjacent, the angle between the planes of the fractures must be at least 30 degrees to count as two fractured faces.

2.1.2 Binder Material

Binder material shall consist of screenings, angular sand, or other finely divided mineral matter processed or naturally combined with the coarse aggregate. Liquid-limit and plasticity-index requirements shall apply to any component that is blended to meet the required gradation and shall also apply to the completed course. The portion of any component or of the completed course passing the 0.425 mm sieve shall be either nonplastic or have a liquid limit not greater than 25 and a plasticity index not greater than 5.

2.1.3 Gradation

Requirements for gradation specified shall apply to the completed base course. The aggregates shall have a 25 mm maximum size and shall be continuously graded within the following limits:

Sieve Designation	Percent by Weight Passing Square-mesh Sieve (a)(b)
25 mm(1-inch)	100
13 mm(1/2-inch)	79-91
4.75 mm(No. 4)	49-61
1.00 mm(No. 16)	27-35
75 um(No. 200)	2-8

(a) Similar to 1-Inch Gradation, Untreated Base Course, State of Utah *Standard Specifications*.

(b) The values are based on aggregates of uniform specific gravity, and the percentages passing the various sieves are subject to appropriate correction in accordance with ASTM C 127 and ASTM C 128 when aggregates of varying specific gravities are used.

PART 3 EXECUTION

3.1 GENERAL REQUIREMENTS

Adequate drainage shall be provided during the entire period of construction to prevent water from collecting or standing on the working area. Line and grade stakes shall be provided as necessary for control. Grade stakes shall be in lines parallel to the centerline of the area under construction and suitably spaced for string lining.

3.2 STOCKPILING MATERIAL

Aggregates shall be obtained from off-site sources.

3.3 PREPARATION OF UNDERLYING COURSE

3.3.1 General Requirements

Before constructing aggregate base course, the previously constructed underlying course shall be cleaned of foreign substances. Surface of underlying course shall meet the specified compaction and surface tolerances. Subgrade shall conform to Section 02225 EARTHWORK FOR ROADWAYS. Ruts or soft, yielding spots that may appear in the underlying course, areas having inadequate compaction, and deviations of the surface from requirements specified shall be corrected. Finished underlying course shall not be disturbed by traffic or other operations and shall be maintained in a satisfactory condition until base course is placed.

3.3.2 Grade Control

Underlying material shall be excavated to sufficient depth for the required base course thickness so that the finished base course with the subsequent surface course will meet the fixed grade. Finished and completed area shall conform to the lines, grades, cross section, and dimensions indicated.

3.4 INSTALLATION

3.4.1 Mixing and Placing

Materials shall be mixed by the stationary plant, traveling plant, or road mix method and placed in such a manner as to obtain uniformity of the aggregate base course material and at a uniform optimum water content for compaction. The Contractor shall make such adjustments in mixing or placing procedures or in equipment to obtain the true grades, to minimize segregation and degradation, to reduce or accelerate loss or increase of water, and to ensure a satisfactory base course.

3.4.2 Edges of Base Course

Approved material shall be placed along edges of aggregate base course in such quantities as will compact to thickness of the course being constructed, or to the thickness of each layer in a multiple layer course, allowing in each operation at least a 300 mm width of the shoulder to be rolled and compacted simultaneously with rolling and compacting of each layer of base course.

3.4.3 Compaction

Each layer of aggregate base course, including shoulders, shall be compacted. Water content shall be maintained at optimum. Density of compacted mixture shall be at least 98 percent of laboratory maximum density. Rolling shall begin at the outside edge of the surface and proceed to the center, overlapping on successive trips at least one-half the width of the roller. Alternate trips of the roller shall be slightly different lengths. Speed of the roller shall be such that displacement of the aggregate does not occur. Areas inaccessible to the rollers shall be compacted with mechanical tampers, and shall be shaped and finished by hand methods.

3.4.4 Layer Thickness

Compacted thickness of the aggregate course shall be as indicated. No layer shall be in excess of 150 mm nor less than 100 mm in compacted thickness.

3.4.5 Finishing

The surface of the top layer shall be finished to grade and cross section shown. Finished surface shall be of uniform texture. Light blading during compaction may be necessary for the finished surface to conform to the lines, grades, and cross sections. Should the surface for any reason become rough, corrugated, uneven in texture, or traffic marked prior to completion, such unsatisfactory portion shall be scarified, reworked, recompacted, or replaced as directed.

3.4.5.1 Smoothness

Surface of each layer shall show no deviations in excess of 9.5 mm when tested with the 3 meter straightedge. Deviations exceeding this amount shall be corrected by removing material and replacing with new material, or by reworking existing material and compacting, as directed.

3.4.5.2 Thickness Control

Compacted thickness of the base course shall be within 12 mm of the thickness indicated. Where the measured thickness is more than 12 mm deficient, such areas shall be corrected by scarifying, adding new material of proper gradation, reblading, and recompacting as directed. Where the

measured thickness is more than 12 mm thicker than indicated, the course shall be considered as conforming to the specified thickness requirements. Average job thickness shall be the average of all thickness measurements taken for the job, but shall be within 6 mm of the thickness indicated.

3.5 FIELD QUALITY CONTROL

3.5.1 Field Density With Moisture Content

Field in-place density shall be determined in accordance with ASTM D 1556 or ASTM D 2922. When ASTM D 2922 is used, the calibration curves shall be checked, and adjusted if necessary, using the sand cone method as described in paragraph Calibration of the ASTM publication. ASTM D 2922 results in a wet unit weight of soil, and when using this method, ASTM D 3017 shall be used to determine the moisture content of the soil. The calibration curves furnished with the moisture gauges shall be checked along with density calibration checks as described in ASTM D 3017. If ASTM D 2922 is used, in-place densities shall be checked by ASTM D 1556 and ASTM D 2216at least once for every 5 nuclear density tests of completed base course. Calibration curves and calibration test results shall be furnished within 24 hours of the conclusion of the tests. Perform two field density tests with moisture contents for each increment or fraction of 1000 square meters placed during each 8 hour shift.

3.5.2 Gradation With Atterberg Limits

Before starting work, at least one sample of material shall be tested for gradation and Atterberg limit compliance. After the initial test, perform two sets of tests, on compacted material, for every 5 field density tests. Gradations shall be in accordance with ASTM C 136 and ASTM D 422 on sieves conforming to ASTM E 11. Atterberg limits shall be determined by the test method outlined in ASTM D 4318.

3.5.3 Moisture-Density Relationship

Perform one moisture-density relationship test for every 5 field density tests (with not less than 1 test for each type of material). Moisture-density relationships from bulk samples shall be established with the test method outlined in ASTM D 1557, Procedure C.

3.5.4 Wear Tests

One wear test shall be run for every five field density tests (with not less than 1 test for each type of material). Wear tests shall be performed on bulk samples in accordance with ASTM C 131.

3.5.5 Smoothness

Measurements for deviation from grade and cross section shown shall be taken in successive positions parallel to the road centerline with a 3 meter straightedge. Measurements shall also be taken perpendicular to the road centerline at 15 meter intervals.

3.5.6 Thickness

Thickness of the base course shall be measured at intervals in such a manner as to ensure one measurement for each 250 square meters of base course. Measurements shall be made by taking differential elevations at preselected locations between the subgrade and the top of the completed

base course. Locations and subgrade elevations shall be delivered to the Contracting Officer prior to base course placement. Locations and top of base course elevations shall be delivered to the Contracting Officer within 24 hours of base course completion.

3.6 TRAFFIC

Completed portions of the area may be opened to traffic, provided there is no marring or distorting of the surface by the traffic. Heavy equipment shall not be permitted except when necessary to construction, and then the area shall be protected against marring or damage to the completed work.

3.7 MAINTENANCE

The aggregate base course shall be maintained in a satisfactory condition until accepted. Maintenance shall include immediate repairs to any defects and shall be repeated as often as necessary to keep the area intact.

3.8 DISPOSAL OF UNSATISFACTORY MATERIALS

Removed in-place materials that are unsuitable for the base course material that is removed for the required correction of defective areas, and waste material and debris shall be disposed of as directed.

-- End of Section --

SECTION TABLE OF CONTENTS

DIVISION 02 - SITE WORK

SECTION 02513

BITUMINOUS COURSE

PART 1 GENERAL

1.1 SUMMARY (Not Applicable)
1.2 REFERENCES
1.3 SUBMITTALS
1.4 PLANT, EQUIPMENT, MACHINES, AND TOOLS
1.4.1 Mixing Plants
1.4.2 Other Equipment
1.4.2.1 Spreaders
1.4.2.2 Blowers and Brooms
1.4.2.3 Saws
1.4.2.4 Small Tools
1.4.2.5 Straightedge
1.4.3 Rollers
1.4.3.1 Steel Wheeled Rollers
1.4.3.2 Pneumatic-tired Rollers
1.5 WEATHER LIMITATIONS

PART 2 PRODUCTS

2.1 AGGREGATES
2.1.1 Coarse Aggregates
2.1.2 Fine Aggregates
2.1.3 Mineral Filler
2.1.4 Aggregate Gradation
2.2 BITUMINOUS MATERIAL
2.3 COMPOSITION OF MIXTURE
2.3.1 Job-Mix Formula
2.3.2 Test Properties of Bituminous Mixtures
2.3.3 Nonabsorptive Aggregate
2.3.4 Absorptive Aggregate
2.3.5 Stripping of Aggregates

PART 3 EXECUTION

3.1 SAMPLING AND TESTING
3.1.1 Testing Frequency
3.2 TREATMENT OF UNDERLYING SURFACE
3.3 MIXING TEMPERATURE
3.4 TRANSPORTATION OF BITUMINOUS MIXTURE
3.5 PLACING
3.6 COMPACTION OF ASPHALT MIXTURE
3.6.1 Rolling
3.6.1.1 Vibratory Steel Wheeled Rollers
3.6.1.2 Mixture Density
3.6.1.3 Compacted Thickness
3.7 JOINTS AND EDGES
3.7.1 Transverse Joints

3.7.2 Longitudinal Joints
3.7.3 Pavement Edges
3.8 PROTECTION OF PAVEMENT
3.9 SURFACE REQUIREMENTS

-- End of Section Table of Contents --

SECTION 02513

BITUMINOUS COURSE
(CENTRAL-PLANT HOT MIX)

PART 1 GENERAL

1.1 SUMMARY (Not Applicable)

1.2 REFERENCES

The publications listed below form a part of this specification to the extent referenced. The publications are referred to in the text by basic designation only.

AMERICAN SOCIETY FOR TESTING AND MATERIALS (ASTM)

ASTM C 88	(1990) Soundness of Aggregates by Use of Sodium Sulfate or Magnesium Sulfate
ASTM C 127	(1988; R 1993) Specific Gravity and Absorption of Course Aggregate
ASTM C 128	(1993) Specific Gravity and Absorption of Fine Aggregate
ASTM C 131	(1996) Resistance to Degradation of Small-Sized Course Aggregate by Abrasion and Impact in the Los Angeles Machine
ASTM C 136	(1996a) Sieve Analysis of Fine and Coarse Aggregates
ASTM D 5	(1995) Penetration of Bituminous Materials
ASTM D 75	(1987; R 1992) Sampling Aggregates
ASTM D 140	(1993) Sampling Bituminous Materials
ASTM D 242	(1995) Mineral Filler for Bituminous Paving Mixtures
ASTM D 1559	(1989) Resistance to Plastic Flow of Bituminous Mixtures Using Marshall Apparatus
ASTM D 2041	(1995) Theoretical Maximum Specific Gravity and Density of Bituminous Paving Mixtures
ASTM D 3381	(1992) Viscosity-Graded Asphalt Cement for Use in Pavement Construction
ASTM D 3666	(1996a) Minimum Requirement for Agencies Testing and Inspecting Bituminous Paving Materials

DEPARTMENT OF THE ARMY, CORPS OF ENGINEERS

CESPK PAM 415-1-2	Construction Control Manual
COE CRD-C 171	Determining Percentage of Crushed Particles in Aggregate

1.3 SUBMITTALS

Government approval is required for submittals with a "GA" designation; submittals having an "FIO" designation are for information only. The following shall be submitted in accordance with Section 01300 SUBMITTAL DESCRIPTIONS:

SD-09 Reports

Bituminous Pavement; FIO.

Copies of test results.

1.4 PLANT, EQUIPMENT, MACHINES, AND TOOLS

1.4.1 Mixing Plants

Mixing plant shall be a weigh-batch, continuous-mix type or dryer drum type and operated so as to produce a mixture within the job-mix formula. The plant shall have a minimum capacity of 90 metric tons per hour.

1.4.2 Other Equipment

1.4.2.1 Spreaders

Bituminous-materials spreaders shall be self-propelled, capable of producing a finished surface conforming to the smoothness requirements specified hereinafter. The use of a spreader that leaves indentations or other objectionable irregularities in the freshly-laid mix is not permitted.

1.4.2.2 Blowers and Brooms

Blowers and brooms shall be of the power type suitable for cleaning the surface to be paved.

1.4.2.3 Saws

Saws shall be of the power type, capable of rapidly cutting pavement and trimming joints and edges of pavement.

1.4.2.4 Small Tools

Small tools available on the work shall consist of the following: rakes, lutes, shovels, tampers, smoothing irons, pavement cutters, portable heater for heating small tools, wood sandles and stilt sandals of standard type, and other small tools as may be required. A sufficient number shall be available at all times. The lutes shall be constructed of metal and shall consist of a plate or sheet 1 meter x 0.1 meter attached to a handle properly braced. Hand tampers shall weigh not less than 12 kg and have a tamping face not larger than 0.032 square meters.

1.4.2.5 Straightedge

The Contractor shall furnish and maintain at the site, in good condition, one 3.66 meter (12-foot) straightedge for each bituminous paver. The straightedge shall be made available for Government use. Straightedges shall be constructed of aluminum or other lightweight metal and shall have blades of box-girder cross section with flat bottom reinforced to insure rigidity and accuracy. Straightedges shall have handles to facilitate movement on the pavement.

1.4.3 Rollers

The minimum number of rollers for each spreader shall be one 2-axle tandem roller and one pneumatic-tired roller, with separate operator for each roller.

1.4.3.1 Steel Wheeled Rollers

Steel-wheel rollers shall be a self-propelled 2-axle tandem roller weighing not less than 9 metric tons. The rollers shall have adjustable wheel scrapers, water tanks, and sprinkling apparatus to keep the wheels sufficiently wet to prevent the bituminous mixture from sticking to the wheels. The rollers shall be capable of reversing without backlash and shall be free from worn parts. The roller wheels shall not have flat or pitted areas or projections that will leave marks in the pavement.

1.4.3.2 Pneumatic-tired Rollers

Pneumatic-tired rollers shall be self-propelled and shall consist of two axles on which are mounted multiple pneumatic-tired wheels in such manner that the rear group of wheels will not follow in the tracks of the forward group but spaced to give essentially uniform coverage with each pass. Axles shall be mounted in a rigid frame provided with a loading platform or body suitable for ballast loading. Tires shall be smooth and capable of being inflated to at least 420 kPa. Construction of roller shall be such that each wheel can be loaded to a minimum of 1360 kg.

1.5 WEATHER LIMITATIONS

Bituminous course shall be constructed only when base course and existing pavement is dry. Unless otherwise directed, bituminous course shall not be constructed when temperature of the surface of existing pavement or base course is below 5 degrees C.

PART 2 PRODUCTS

2.1 AGGREGATES

Aggregates shall consist of crushed stone, crushed gravel, screenings, sand, and mineral filler. Aggregates shall have a satisfactory service record in bituminous pavement construction, and the source selected shall be approved by the Contracting Officer. The combined aggregates and mineral filler shall meet the requirements of subsequent paragraphs AGGREGATE GRADATION and COMPOSITION OF MIXTURE.

2.1.1 Coarse Aggregates

Coarse aggregate shall consist of clean, sound, durable particles meeting the following requirements:

a. Degradation not greater that 40 percent after 500 revolutions when tested in accordance with ASTM C 131.

b. Loss not greater than 12 percent after five cycles of testing in accordance with ASTM C 88, using sodium sulfate.

c. Aggregate fractured faces shall be tested in accordance with COE CRD-C 171.

2.1.2 Fine Aggregates

Fine aggregate shall consist of clean, sound, durable, angular particles produced by crushing stone or gravel that meet the requirements for wear and soundness specified for coarse aggregates. This requirement shall apply to material before blending with natural sand when blending is necessary.

2.1.3 Mineral Filler

Material passing the 75 um sieve shall be known as mineral filler, and shall conform to ASTM D 242.

2.1.4 Aggregate Gradation

The aggregate gradation as determined by ASTM C 136 shall fall within the limits of the following:

Sieve Designation	Percent by Weight Passing Square-mesh Sieve (a)
25 mm	100
12.5 mm	71-91
9.5 mm	62-82
4.75 mm	43-59
2.36 mm	26-40
1.18 mm	14-28
300 um	5-17
75 um	2-6

(a) Similar to Utah Gradation: 100 percent crushed, 19 mm, number 2 as specified in Paragraph 402.2.2.3 of the State of Utah Department of Transportation *Standard Specifications for Road and Bridge Construction*.

2.2 BITUMINOUS MATERIAL

Bituminous material to be mixed with the mineral aggregates shall be paving asphalt conforming to ASTM D 3381, Viscosity-Graded Asphalt Cement for Use in Pavement Construction as listed in Table of the ASTM D 3381, Requirements for Asphalt Cement Viscosity-Graded at 60 degrees C. **Paving asphalt viscosity grade shall be AC-10**. Certified results of tests conducted in accordance with ASTM D 5 shall be submitted in advance of any paving, showing the penetration at 25 degrees C for the AC grades of asphalt that will actually be used in the paving mix of this project. In addition, the penetration range at 25 degrees C shall be 25.

2.3 COMPOSITION OF MIXTURE

2.3.1 Job-Mix Formula

The job-mix formula shall be performed in accordance with ASTM D 1559 and shall be submitted by the Contractor a minimum of 30 days prior to the commencement of paving operations. No bituminous mixture shall be manufactured until it has been approved by the Contracting Officer. Data shall be presented with respect to the asphalt cement content in tabulated form, as well as graphical form, and shall include curves for unit weight, percent voids of total mix, percent voids filled, stability, and the optimum asphalt content. Additionally, the formula shall indicate the percentage and specific gravity of each bin fraction of aggregate, percentage absorption and specific gravity of asphalt, temperature of the mixture as discharged from the mixer; and test results which show that the job mix formula will produce a bituminous mixture which meets all requirements of this specification. The Contractor may, at its option, use ASTM D 2041 to determine the theoretical specific gravity for the paving mixture. If ASTM D 2041 is used, the physical test properties of the paving mixture shall meet the requirements of TABLE 1, located herein after, regardless of whether the aggregates are absorptive or non-absorptive. Previously established test results will be acceptable provided that the tests were performed within the last six months. The asphalt in the job-mix formula shall be between 4.5% and 7.5% of the weight of the total mix. If requested by the Contracting Officer, samples of the aggregates and asphalt shall be submitted for approval of the job-mix formula.

2.3.2 Test Properties of Bituminous Mixtures

2.3.3 Nonabsorptive Aggregate

When the water absorption value of the entire blend of aggregate does not exceed 2.5 percent as determined by ASTM C 127 and ASTM C 128, aggregate is designated as nonabsorptive. The test method outlined in ASTM D 2041 may be utilized for the determination of the theoretical maximum specific gravity and density of the paving mixture providing that the mixture meets the requirements of Table 1. The apparent specific gravity shall be used in computing the voids total mix and voids filled with bitumen. Stability and flow shall be determined in accordance with ASTM D 1559. The mixture shall meet the requirements of Table 1 herein.

TABLE 1. NONABSORPTIVE AGGREGATE MIXTURE

Test Property	50-Blow Compaction
Stability, minimum, Newtons	4450
Flow, 0.25 mm units	8 minimum, 20 maximum
Voids total mix, percent	3-5
Voids filled with bitumen, percent	75-85

2.3.4 Absorptive Aggregate

When the water absorption value of the entire blend of aggregate exceeds 2.5 percent as determined in ASTM C 127 and ASTM C 128, the aggregate is designated as absorptive. The test method outlined in ASTM D 2041 may be utilized for the determination of the theoretical maximum specific gravity and density of the paving mixture providing that the mixture meets the requirements of Table 2. Bulk-impregnated specific gravity shall be used in computing the percentages of voids total mix and voids filled with

bitumen. Stability and flow shall be determined in accordance with ASTM D 1559. The mixture shall meet the requirements in Table 2, herein.

TABLE 2. ABSORPTIVE AGGREGATE MIXTURE

Test Property	50-Blow Compaction
Stability, minimum, Newtons	4450
Flow, 0.25 mm units	8 minimum, 20 maximum
Voids total mix, percent	2-4
Voids filled with bitumen, percent	80-90

2.3.5 Stripping of Aggregates

After 24 hours immersion in water bath controlled at a temperature of 60 degrees C, the retained stability of job-mix formula test specimens shall be at least 75 percent of the stability of companion specimens prepared for the job-mix formula when tested in accordance with ASTM D 1559. If the retained stability is less than the required 75 percent, the aggregates shall be either rejected or treated by one of the following procedures until the retained stability reaches the required 75 percent: (1) Addition of heat-stable additives to bitumen; (2) addition of hydrated lime, or other cementitious material containing free lime, as a portion of the mineral filler.

PART 3 EXECUTION

3.1 SAMPLING AND TESTING

The testing laboratory and all field and laboratory testing personnel shall meet the requirements specified in ASTM D 3666. Aggregate sampling shall be performed in accordance with ASTM D 75. Bituminous materials shall be sampled in accordance with ASTM D 140. All 100 mm in diameter core samples shall be suitable to determine conformance with stability, density, thickness and other specified requirements. An approved core drill shall be used for cutting samples. The Contractor shall furnish all tools, labor, and materials for cutting samples, testing, and replacing the pavement where samples were removed, to the satisfaction of the Contracting Officer.

3.1.1 Testing Frequency

All sampling and control testing for construction of the pavement shall be performed by the Contractor in accordance with the requirements outlined in Chapter 4 of CESPK PAM 415-1-2.

a. Asphalt: Collect a 1 liter sample of asphalt and the refinery certification. Resample anytime the bituminous material source changes.

b. Aggregate: Collect a minimum of two 23 kg samples of mix aggregate from the hot bins; one sample at the beginning of each 8-hour shift and the other at mid-shift. Each 23 kg sample shall be split in half. The two half-samples (from the beginning and mid-shift) shall be labeled and packed separately and submitted to the Contracting Officer within 24 hours of sampling. Retain two half-samples for QC testing.

c. Hot Mix: Collect a minimum of two 32 kg samples of hot mix from the belt or transport truck; one sample at the beginning of each 8-hour shift

and the other at mid-shift. Each 32 kg sample shall be split in half. The two half-samples (from the beginning and mid-shift) shall be labeled and packed separately and submitted to the Contracting Officer within 24 hours of sampling. Retain two half-samples for QC testing.

d. Core Specimens: Collect 1 set of 5 cores per each hot mix sample collected (if possible, 2 cores from the centerline of joints). Number cores and note the locations obtained on the as-built drawings. From each set, 2 cores shall be submitted to the Contracting Officer (preferably 1 core from a joint centerline). Retain remaining cores for QC testing. Testing shall be in accordance with the Marshall test procedures of ASTM D 1559 and shall meet or surpass the requirements specified herein before. No payment will be made for areas of pavement deficient in composition, density, or thickness until they are removed and replaced by the Contractor as directed by the Contracting Officer.

e. Smoothness Testing: Perform testing at 15 meter intervals along the section centerlines of the parking areas and access ways as specified in the paragraph SURFACE REQUIREMENTS.

3.2 TREATMENT OF UNDERLYING SURFACE

Prior to laying a bituminous course, the underlying surface shall be cleaned of loose and foreign matter by sweeping with power sweepers, power brooms, and hand brooms, as directed. The surface to be paved shall receive a prime coat conforming to Section 02558 BITUMINOUS TACK AND PRIME COATS.

3.3 MIXING TEMPERATURE

Temperature of asphalt and aggregate at time of mixing shall not exceed 163 degrees C when asphalt is added.

3.4 TRANSPORTATION OF BITUMINOUS MIXTURE

The bituminous mixture shall be transported from the mixing plant to the site in trucks having tight, clean, smooth bodies with a minimum coating of concentrated solution of hydrated lime and water to prevent adhesion of the mixture. Each load of mixture shall be covered with canvas or other suitable material to protect the mixture from the weather and to prevent loss of heat. Mixtures having temperatures greater than 163 degrees C, mixtures having temperatures less than 118 degrees C, or mixtures which foam or show indications of moisture will be rejected. Hauling over freshly laid material is not permitted.

3.5 PLACING

Contact surfaces of previously constructed pavement, curbs, manholes, or other structures shall be sprayed with a thin coat of bituminous tack coat in accordance with Section 02558 BITUMINOUS TACK AND PRIME COATS. The mechanical spreader shall be adjusted and its speed regulated so that the course being placed will be smooth and continuous without tears and pulling. The course will be of such depth that after compaction, the cross section, grade, and contour will be as shown on the drawings. In areas where the use of machine spreading is impractical, the mixture shall be spread by hand. Unless otherwise directed, placing shall begin on the high side of areas with a one-way slope or along the centerline of areas with a crowned section and shall be in the direction of the main traffic flow. Placing of the mixture shall be as continuous as possible, and the speed of

placing shall be adjusted to permit proper rolling.

3.6 COMPACTION OF ASPHALT MIXTURE

Compaction of asphalt mixture shall be accomplished by the steel wheel rollers and pneumatic-tired roller specified above.

3.6.1 Rolling

Rolling shall begin as soon after placing as the mixture will support the roller without undue displacement. Breakdown rolling shall consist of at least three coverages of a layer of asphalt mixture with a steel wheel roller, immediately followed by at least three coverages with a pneumatic-tired roller. A coverage is defined to be as many passes in either direction as may be necessary to cover the entire width of lane with overlap between passes. Each layer shall be additionally compacted by a final rolling of not less than one coverage with a 2-axle tandem roller. The speed of the rollers shall not exceed 3 miles per hour and rolling shall be performed in such a manner to avoid cracking, shoving, or displacement of the hot mixture.

3.6.1.1 Vibratory Steel Wheeled Rollers

Use of vibratory steel wheel roller for breakdown and finish rolling is subject to prior approval. Vibratory roller shall be operated with the vibratory units off for finish rolling. The maximum weight of the vibratory roller shall not exceed 45 kN.

3.6.1.2 Mixture Density

The bituminous mixture shall be compacted to at least 95 percent of the density of the laboratory specimen of the same mixture subjected to 50 blows of a standard Marshall hammer on each side of the specimen. In areas not accessible to the roller the mixture shall be compacted with hot hand tampers. The compacted surface shall be smooth and free from roller marks, ruts, humps, depressions, or irregularities.

3.6.1.3 Compacted Thickness

The mixture shall be placed in one lift and compacted to the thicknesses indicated within the tolerances specified herein.

3.7 JOINTS AND EDGES

Joints between old and new pavements or between successive day's work, or joints that have become cold because of delay, shall be made to insure continuous bond between old and new sections of course. All joints shall have the same texture, density, and smoothness as other sections of course. Contact surfaces of previously constructed pavements that have become coated with dust, sand or other objectionable material shall be cleaned by brushing or cut back with approved power saw, as directed. The surface against which new material is placed shall be sprayed with a thin, uniform coat of bituminous tack coat.

3.7.1 Transverse Joints

The roller shall pass over the unprotected end of freshly placed mixture only when placing of course is discontinued or when delivery of mixture is interrupted to the extent that unrolled material may become cold. In all

cases, edge of the previously placed course shall be sawn back to expose an even, vertical surface the full thickness of the course.

3.7.2 Longitudinal Joints

Edges of previously placed strip that have cooled or are irregular, honeycombed, poorly compacted, damaged, or otherwise defective, and unsatisfactory sections of the joint shall be sawn back to expose clean, sound surface for full thickness of the course as directed.

3.7.3 Pavement Edges

Edges of pavement adjacent to shoulders shall be trimmed neatly to line. An earth berm of selected material not less than 0.3 meters wide shall be placed against and to the full height of the pavement surface as soon as practicable after final rolling has been completed and pavement has sufficiently hardened.

3.8 PROTECTION OF PAVEMENT

No vehicular traffic shall be permitted on the pavement for at least 6 hours after final rolling.

3.9 SURFACE REQUIREMENTS

The finished surface shall not vary more than 6 mm (1/4-inch) from a3.66 meter straightedge. The straightedge shall be furnished by the Contractor. Defective areas and any other areas that impound surface water shall be corrected by and at the expense of the Contractor. Straightedge testing shall be performed as a Contractor Quality Control requirement to demonstrate compliance.

-- End of Section --

SECTION TABLE OF CONTENTS

DIVISION 02 - SITE WORK

SECTION 02546

AGGREGATE SURFACE COURSE

PART 1 GENERAL

1.1 REFERENCES
1.2 DEFINITIONS
1.2.1 Aggregate Surface Course
1.2.2 Degree of Compaction
1.2.3 Moisture Content
1.3 GENERAL
1.4 SUBMITTALS
1.5 EQUIPMENT
1.6 WEATHER LIMITATIONS

PART 2 PRODUCTS

2.1 AGGREGATES
2.1.1 Coarse Aggregates
2.1.2 Fine Aggregates
2.1.3 Gradation Requirements
2.1.4 Liquid Limit and Plasticity Index

PART 3 EXECUTION

3.1 STOCKPILING MATERIALS
3.2 PREPARATION OF UNDERLYING COURSE SUBGRADE
3.3 GRADE CONTROL
3.4 MIXING AND PLACING MATERIALS
3.5 LAYER THICKNESS
3.6 COMPACTION
3.7 SAMPLING AND TESTING
3.7.1 General Requirements
3.7.2 Test Results
3.7.3 Sampling
3.7.4 Field Density with Moisture Content
3.7.5 Gradation with Atterberg Limits
3.7.6 Moisture-Density Relationship
3.7.7 Wear Tests
3.7.8 Approval of Materials
3.8 EDGES OF AGGREGATE-SURFACED ROAD
3.9 SMOOTHNESS TEST
3.10 THICKNESS CONTROL
3.11 MAINTENANCE

-- End of Section Table of Contents --

SECTION 02546

AGGREGATE SURFACE COURSE

PART 1 GENERAL

1.1 REFERENCES

The publications listed below form a part of this specification to the extent referenced. The publications are referred to in the text by basic designation only.

AMERICAN SOCIETY FOR TESTING AND MATERIALS (ASTM)

ASTM C 131	(1989) Resistance to Degradation of Small-Size Coarse Aggregate by Abrasion and Impact in the Los Angeles Machine
ASTM C 136	(1995a) Sieve Analysis of Fine and Coarse Aggregates
ASTM D 75	(1987; R 1992) Sampling Aggregates
ASTM D 422	(1963; R 1990) Particle-Size Analysis of Soils
ASTM D 1556	(1990) Density and Unit Weight of Soil in Place by the Sand-Cone Method
ASTM D 1557	(1991) Laboratory Compaction Characteristics of Soil Using Modified Effort (56,000 ft-lbf/cu. ft. (2,700 kN-m/cu. m.))
ASTM D 2216	(1992) Laboratory Determination of Water(Moisture) Content of Soil, Rock, and Soil-Aggregate Mixtures
ASTM D 2922	(1991) Density of Soil and Soil-Aggregate in Place by Nuclear Methods (Shallow Depth)
ASTM D 3017	(1988; R 1993) Water Content of Soil and Rock in Place by Nuclear Methods (Shallow Depth)
ASTM D 3740	(1994a) Minimum Requirements forAgencies Engaged in the Testing and/or Inspection of Soil and Rock as Used in Engineering Design and Construction
ASTM D 4318	(1993) Liquid Limit, Plastic Limit, and Plasticity Index of Soils
ASTM E 11	(1995) Wire-Cloth Sieves for Testing Purposes

1.2 DEFINITIONS

1.2.1 Aggregate Surface Course

The aggregate surface course is composed of well-graded, durable aggregate and includes gravel, sand and binder, is uniformly moistened and mechanically stabilized by compaction.

1.2.2 Degree of Compaction

Degree of compaction is the ratio of the field dry density to the maximum dry density determined in the laboratory, expressed as a percentage of the maximum density. The field dry density shall be determined by ASTM D 1556, and the laboratory maximum dry density shall be determined by ASTM D 1557, Procedure C.

1.2.3 Moisture Content

Moisture content is the ratio of the weight of the water to the weight of the solid matter expressed as a percentage and is determined by ASTM D 2216.

1.3 GENERAL

The work specified herein consists of the construction of an aggregate surface course. The work shall be performed in accordance with this specification and shall conform to the lines, grades, notes and typical sections shown in the plans. Sources of all materials shall be selected well in advance of the time that materials will be required in the work.

1.4 SUBMITTALS

Government approval is required for submittals with a "GA" designation; submittals having an "FIO" designation are for information only. The following shall be submitted in accordance with Section 01330 SUBMITTAL PROCEDURES:

SD-01 Data

Equipment; FIO.

List of proposed equipment to be used in performance of construction work including descriptive data.

SD-09 Reports

Sampling and Testing; GA. Density Test; GA.

Calibration curves and related test results prior to using the device or equipment being calibrated. Copies of field test results within 24 hours after the tests are performed. Test results from samples, not less than 30 days before material is required for the work. Results of laboratory tests for quality control purposes, for approval, prior to using the material.

1.5 EQUIPMENT

All plant, equipment, and tools used in the performance of the work covered by this section will be subject to approval by the Contracting Officer

before the work is started and shall be maintained in satisfactory working condition at all times. The equipment shall be adequate and shall have the capability of producing the required compaction, and meeting the grade controls, thickness controls, and smoothness requirements set forth herein.

1.6 WEATHER LIMITATIONS

Aggregate surface courses shall not be constructed when the ambient temperatures is below 2 degrees C and on subgrades that are frozen or contain frost. It shall be the responsibility of the Contractor to protect, by approved method or methods, all areas of surfacing that have not been accepted by the Contracting Officer. Surfaces damaged by freeze, rainfall, or other weather conditions shall be brought to a satisfactory condition by the Contractor.

PART 2 PRODUCTS

2.1 AGGREGATES

Aggregates shall consist of clean, sound, durable particles of natural gravel, crushed gravel, crushed stone, sand, slag, soil, or other approved materials processed and blended or naturally combined. Aggregates shall be free from lumps and balls of clay, organic matter, objectionable coatings, and other foreign materials. The Contractor shall be responsible for obtaining materials that meet the specification and can be used to meet the grade and smoothness requirements specified herein after all compaction and proof rolling operations have been completed.

2.1.1 Coarse Aggregates

The material retained on the 4.75 mm sieve shall be known as coarse aggregate. Coarse aggregates shall be reasonably uniform in density and quality. The coarse aggregate shall have a percentage of wear not to exceed 50 percent after 500 revolutions as determined by ASTM C 131. The amount of flat and/or elongated particles shall not exceed 20 percent. A flat particle is one having a ratio of width to thickness greater than three; an elongated particle is one having a ratio of length to width greater than three. When the coarse aggregate is supplied from more than one source, aggregate from each source shall meet the requirements set forth herein.

2.1.2 Fine Aggregates

The material passing the 4.75 mm sieve shall be known as fine aggregate. Fine aggregate shall consist of screenings, sand, soil, or other finely divided mineral matter that is processed or naturally combined with the coarse aggregate.

2.1.3 Gradation Requirements

Gradation requirements specified in TABLE I shall apply to the completed aggregate surface. It shall be the responsibility of the Contractor to obtain materials that will meet the gradation requirements after mixing, placing, compacting, and other operations. TABLE I shows permissible gradings for granular material used in aggregate surface roads and airfields. Sieves shall conform to ASTM E 11.

TABLE I. GRADATION FOR AGGREGATE SURFACE COURSES

Sieve Designation	Percent Passing
25 mm	100
9.5 mm	50-85
4.7 mm	35-65
2.00 mm	25-50
0.425 mm	15-30
0.075 mm	8-15

2.1.4 Liquid Limit and Plasticity Index

The portion of the completed aggregate surface course passing the 0.425 mm sieve shall have a maximum liquid limit of 35 and a plasticity index of 4 to 9.

PART 3 EXECUTION

3.1 STOCKPILING MATERIALS

Prior to stockpiling the material, the storage sites shall be cleared and leveled by the Contractor. Approved aggregate surface course(ASC) material shall be stockpiled in the manner and at the locations designated. ASC shall be stockpiled in such a manner that will prevent segregation and shall be obtained from off-site sources.

3.2 PREPARATION OF UNDERLYING COURSE SUBGRADE

The underlying subbase course, including shoulders, shall be cleaned of all foreign substances. At the time of surface course construction, the underlying subbase shall contain no frozen material. Ruts or soft yielding areas having inadequate compaction and deviations of the surface from the requirements set forth herein shall be corrected by loosening and removing soft or unsatisfactory material and by adding approved material, reshaping to line and grade and recompacting to density requirements specified in Section 02232 SUBBASE COURSE. The completed underlying course shall not be disturbed by traffic or other operations and shall be maintained by the Contractor in a satisfactory condition until the surface course is placed.

3.3 GRADE CONTROL

Finished and completed surface course shall conform to the lines, grades, cross section and dimensions indicated.

3.4 MIXING AND PLACING MATERIALS

The materials shall be mixed and placed in such a manner as to obtain uniformity of the material and at a uniform optimum water content for compaction. The Contractor shall make such adjustments in mixing or placing procedures or in equipment so as to minimize segregation and degradation, to obtain the desired water content, and to meet compaction requirements from the top to the base of layer.

3.5 LAYER THICKNESS

The aggregate material shall be placed in a layer of uniform thickness.

When a compacted layer of 175 mm or less is specified, the material may be placed in a single layer; when a compacted thickness of more than 175 mm is required, no layer shall exceed 175 mm nor be less than 75 mm when compacted.

3.6 COMPACTION

Each layer of the aggregate surface course shall be compacted with approved compaction equipment. The water content during the compaction procedure shall be maintained at optimum plus or minus two percent. In locations not accessible to the rollers, the mixture shall be compacted with mechanical tampers. Compaction shall continue until each layer through the full depth is compacted to at least 98 percent of laboratory maximum density. Any materials that are found to be unsatisfactory shall be removed and replaced with satisfactory material or reworked to produce a satisfactory material.

3.7 SAMPLING AND TESTING

3.7.1 General Requirements

Sample and test according to the Construction Control Manual except as specified herein. Sampling and testing shall be performed by an approved commercial testing laboratory subject to approval and meeting the requirements of ASTM D 3740. No work requiring testing shall be permitted until the facilities have been inspected and approved. The first inspection shall be at the expense of the Government. Cost incurred for any subsequent inspection required because of failure of the facilities to pass the first inspection will be charged to the Contractor. Tests shall be performed as specified herein after to insure that materials and compaction meet specified requirements.

3.7.2 Test Results

Copies of test results shall be furnished to the Contracting Officer within 24 hours of completion of tests. Results shall verify that materials comply with this specification. When a material source is changed, the new material will be tested for compliance. When deficiencies are found, the initial analysis shall be repeated and the material already placed shall be retested to determine the extent of unacceptable material. All in-place unacceptable material shall be replaced or modified as directed by the Contracting Officer.

3.7.3 Sampling

Sampling for material gradation, liquid limit, and plastic limit tests shall be taken in conformance with ASTM D 75.

3.7.4 Field Density with Moisture Content

Field in-place density shall be determined in accordance with ASTM D 1556 or ASTM D 2922. When ASTM D 2922 is used, the calibration curves shall be checked, and adjusted if necessary, using the sand cone method as described in paragraph Calibration of the ASTM publication. ASTM D 2922 results in a wet unit weight of soil, and when using this method, ASTM D 3017 shall be used to determine the moisture content of the soil. The calibration curves furnished with the moisture gauges shall be checked along with density calibration checks as described in ASTM D 3017. If ASTM D 2922 is used, in-place densities shall be checked by ASTM D 1556 and ASTM D 2216at least once for every 5 nuclear density tests of completed aggregate surface

course. Calibration curves and calibration test results shall be furnished within 24 hours of the conclusion of the tests. Perform two tests per each increment or fraction of 1000 square meters placed during each 8 hour shift.

3.7.5 Gradation with Atterberg Limits

Before starting work, at least one sample of material shall be tested in accordance with ASTM C 136 and ASTM D 422 on sieves conforming to ASTM E 11. Atterberg limits shall be determined by the test method outlined in ASTM D 4318. After the initial test, perform two sets of tests, on compacted material, for every 5 field density tests.

3.7.6 Moisture-Density Relationship

Moisture-density relationships from bulk samples shall be established with the test method outlined in ASTM D 1557, Procedure C. Perform one test for every 5 field density tests; but do no less than 1 test for each type of material.

3.7.7 Wear Tests

Wear tests shall be performed on bulk samples in accordance with ASTM C 131. One test shall be run for every five field density tests, but not less than 1 test for each type of material.

3.7.8 Approval of Materials

The source of the material to be used for producing aggregates shall be selected 30 days prior to the time the material will be required in the work. Approval of sources not already approved by the Corps of Engineers will be based on an inspection by the Contracting Officer. Tentative approval of materials will be based on appropriate test results on the aggregate source. Final approval of the materials will be based on tests for gradation, liquid limit, and plasticity index performed on samples taken from the completed and compacted surface course.

3.8 EDGES OF AGGREGATE-SURFACED ROAD

Approved material shall be placed along the edges of the aggregate surface course in such quantity as to compact to the thickness of the course being constructed. When the course is being constructed in two or more layers, at least 300 mm of shoulder width shall be rolled and compacted simultaneously with the rolling and compacting of each layer of the surface course.

3.9 SMOOTHNESS TEST

The surface of each layer shall not show any deviations in excess of 9 mm when tested with a 3 meter straightedge applied both parallel with and at right angles to the centerline of the paving lane. Deviations exceeding this amount shall be corrected by the Contractor by removing material, replacing with new material, or reworking existing material and compacting, as directed.

3.10 THICKNESS CONTROL

The completed thickness of the aggregate surface course shall be within 13 mm plus or minus, of the thickness indicated on plans. The thickness of the aggregate surface course shall be measured at intervals in such manner

that there will be a thickness measurement for at least each 500 square meters of the aggregate surface course. The thickness measurement shall be made by test holes at least 75 mm in diameter through the aggregate surface course. When the measured thickness of the aggregate surface course is more than 13 mm deficient in thickness, the Contractor, at no additional expense to the Government, shall correct such areas by scarifying, adding mixture of proper gradation, reblading, and recompacting, as directed. Where the measured thickness of the aggregate surface course is more than 13 mm thicker than that indicated, it shall be considered as conforming with the specified thickness requirements plus 13 mm. The average job thickness shall be the average of the job measurements determined as specified above, but shall be within 6 mm of the thickness indicated. When the average job thickness fails to meet this criterion, the Contractor shall, at no additional expense to the Government, make corrections by scarifying, adding or removing mixture of proper gradation, and reblading and recompacting, as directed.

3.11 MAINTENANCE

The aggregate surface course shall be maintained in a condition that will meet all specification requirements until accepted.

-- End of Section --

SECTION TABLE OF CONTENTS

DIVISION 02 - SITE WORK

SECTION 02558

BITUMINOUS TACK AND PRIME COATS

PART 1 GENERAL

1.1 REFERENCES
1.2 SUBMITTALS
1.3 PLANT, EQUIPMENT, MACHINES AND TOOLS
1.3.1 General Requirements
1.3.2 Bituminous Distributor
1.3.3 Power Brooms and Power Blowers
1.4 WEATHER LIMITATIONS

PART 2 PRODUCTS

2.1 TACK COAT
2.2 PRIME COAT

PART 3 EXECUTION

3.1 PREPARATION OF EMULSION
3.2 PREPARATION OF SURFACE
3.3 APPLICATION RATE
3.3.1 Tack Coat
3.3.2 Prime Coat
3.4 APPLICATION TEMPERATURE
3.4.1 Viscosity Relationship
3.4.2 Temperature Ranges
3.5 APPLICATION
3.6 CURING PERIOD
3.7 FIELD QUALITY CONTROL
3.8 SAMPLING AND TESTING
3.8.1 Sampling
3.8.2 Calibration Test
3.8.3 Trial Applications
3.8.3.1 Tack Coat Trial Application Rate
3.8.3.2 Prime Coat Trial Application Rate
3.8.4 Sampling and Testing During Construction

-- End of Section Table of Contents --

SECTION 02558

BITUMINOUS TACK AND PRIME COATS

PART 1 GENERAL

1.1 REFERENCES

The publications listed below form a part of this specification to the extent referenced. The publications are referred to in the text by basic designation only.

AMERICAN SOCIETY OF TESTING AND MATERIALS (ASTM)

ASTM D 140	(1993) Sampling Bituminous Materials
ASTM D 977	(1991) Emulsified Asphalt
ASTM D 2027	(1976; R 1992) Cutback Asphalt (Medium-Curing Type)
ASTM D 2397	(1994) Cationic Emulsified Asphalt
ASTM D 2995	(1993) Determining Application Rate of Bituminous Distributors
ASTM D 3666	(1996a) Minimum Requirement for Agencies Testing and Inspecting Bituminous Paving Materials

1.2 SUBMITTALS

Government approval is required for submittals with a "GA" designation; submittals having an "FIO" designation are for information only. The following shall be submitted in accordance with Section 01300 SUBMITTAL PROCEDURES:

SD-09 Reports

Tests; FIO.

Copies of all test results for bituminous materials, within 24 hours of completion of tests. Certified copies of the manufacturer's test reports indicating compliance with applicable specified requirements, not less than 30 days before the material is required in the work.

SD-18 Records

Waybills and Delivery Tickets; FIO.

Waybills and delivery tickets, during progress of the work.

1.3 PLANT, EQUIPMENT, MACHINES AND TOOLS

1.3.1 General Requirements

Plant, equipment, machines and tools used in the work shall be subject to approval and shall be maintained in a satisfactory working condition at all times.

1.3.2 Bituminous Distributor

The distributor shall have pneumatic tires of such size and number to prevent rutting, shoving or otherwise damaging the base surface or other layers in the pavement structure. The distributor shall be designed and equipped to spray the bituminous material in a uniform coverage at the specified temperature, at readily determined and controlled rates with an allowable variation from the specified rate of not more than plus or minus 5 percent, and at variable widths. Distributor equipment shall include a separate power unit for the bitumen pump, full-circulation spray bars, tachometer, pressure gauges, volume-measuring devices, adequate heaters for heating of materials to the proper application temperature, a thermometer for reading the temperature of tank contents, and a hand hose attachment suitable for applying bituminous material manually to areas inaccessible to the distributor. The distributor shall be equipped to circulate and agitate the bituminous material during the heating process.

1.3.3 Power Brooms and Power Blowers

Power brooms and power blowers shall be suitable for cleaning the surfaces to which the bituminous coat is to be applied.

1.4 WEATHER LIMITATIONS

Bituminous coat shall be applied only when the surface to receive the bituminous coat is dry. Bituminous coat shall be applied only when the atmospheric temperature in the shade is 10 degrees Cor above and when the temperature has not been below 2 degrees C for the 12 hours prior to application.

PART 2 PRODUCTS

2.1 TACK COAT

Emulsified asphalt shall conform to ASTM D 977, Grade SS-1. Cationic emulsified asphalt shall conform to ASTM D 2397, Grade CSS-1.

2.2 PRIME COAT

Cutback asphalt shall conform to ASTM D 2027, Grade MC-70.

PART 3 EXECUTION

3.1 PREPARATION OF EMULSION

Bituminous materials for emulsions shall be diluted by adding equal volumes of bituminous material and compatible water. If the bituminous material is to be diluted in the field, first test the mix by placing equal volumes of emulsion and water in a glass quart jar (do not use a metal container, as it could cause the mixture to "break") and mix for one minute. If the mixture "breaks", a different source of water or bituminous material is required.

3.2 PREPARATION OF SURFACE

Immediately before applying the bituminous coat, all loose material, dirt, clay, or other objectionable material shall be removed from the surface to be treated. The surface shall be dry and clean at the time of treatment.

3.3 APPLICATION RATE

The exact quantities within the range specified, which may be varied to suit field conditions, will be determined by the Contracting Officer.

3.3.1 Tack Coat

Bituminous material for the tack coat shall be applied in quantities of not less than 0.20 liter nor more than 0.70 liters per square meter of pavement surface.

3.3.2 Prime Coat

Bituminous material for the prime coat shall be applied in quantities of not less than 0.70 liter nor more than 1.80 liters per square meter of pavement surface.

3.4 APPLICATION TEMPERATURE

3.4.1 Viscosity Relationship

Asphalt application temperature shall provide an application viscosity between 10 and 60 seconds, Saybolt Furol, or between 20 and 120 square mm/sec, kinematic. The temperature viscosity relation shall be furnished to the Contracting Officer.

3.4.2 Temperature Ranges

The viscosity requirements shall determine the application temperature to e used. The following is a normal range of application temperatures:

Liquid Asphalts	
MC-70	50-107 degrees C
Emulsions	
SS-1	20-70 degrees C
CSS-1	20-70 degrees C

3.5 APPLICATION

Following preparation and subsequent inspection of the surface, the bituminous coat shall be applied at the specified rate with uniform distribution over the surface to be treated. All areas and spots missed by the distributor shall be properly treated with the hand spray. Until the succeeding layer of pavement is placed, the surface shall be maintained by protecting the surface against damage and by repairing deficient areas at no additional cost to the Government. If required, clean dry sand shall be spread to effectively blot up any excess bituminous material. No smoking, fires, or flames other than those from the heaters that are a part of the equipment shall be permitted within 8 meters of heating, distributing, and transferring operations of bituminous material other than bituminous emulsions. To obtain uniform application of the prime coat on the surface

treated at the junction of previous and subsequent applications, building paper shall be spread on the surface for a sufficient distance back from the ends of each application to start and stop the prime coat on the paper. Immediately after application, the building paper shall be removed and disposed of.

3.6 CURING PERIOD

Following application of the bituminous material and prior to application of the succeeding layer of pavement, the bituminous coat shall be allowed to cure and to obtain evaporation of any volatiles or moisture. Prime coat shall be allowed to cure without being disturbed for a period of at least 48 hours or longer, as may be necessary to attain penetration into the treated course.

3.7 FIELD QUALITY CONTROL

Field quality control shall be conducted by personnel meeting the requirements outlined in ASTM D 3666. Samples of the materials used shall be obtained by the Contractor as directed, under the supervision of the Contracting Officer. Samples may be retained and tested by the Government at no cost to the Contractor.

3.8 SAMPLING AND TESTING

Sampling and testing shall be performed by an approved commercial testing laboratory or by facilities furnished by the Contractor. No work requiring testing will be permitted until the facilities have been inspected and approved.

3.8.1 Sampling

The samples of bituminous material, unless otherwise specified, shall be in accordance with ASTM D 140. Sources from which bituminous materials are to be obtained shall be selected and notification thereof furnished the Contracting Officer within 15 days after the award of the contract.

3.8.2 Calibration Test

The Contractor shall furnish all equipment, materials, and labor necessary to calibrate the bituminous distributor. Calibration shall be made with the approved job material and prior to applying the bituminous coat material to the prepared surface. Calibration of the bituminous distributor shall be in accordance with ASTM D 2995.

3.8.3 Trial Applications

Before providing the complete bituminous coat, three lengths of at least 30 meters for the full width of the distributor bar shall be applied to evaluate the amount of bituminous material that can be satisfactorily applied.

3.8.3.1 Tack Coat Trial Application Rate

Unless otherwise authorized, the trial application rate of bituminous tack coat materials shall be applied in the amount of 0.20 liters per square meter. Other trial applications shall be made using various amounts of material as may be deemed necessary.

3.8.3.2 Prime Coat Trial Application Rate

Unless otherwise authorized, the trial application rate of bituminous materials shall be applied in the amount of 1.10 liters per square meter. Other trial applications shall be made using various amounts of material as may be deemed necessary.

3.8.4 Sampling and Testing During Construction

Quality control sampling and testing shall be performed as required in paragraph FIELD QUALITY CONTROL.

-- End of Section --

SECTION TABLE OF CONTENTS

DIVISION 02 - SITE WORK

SECTION 02592

FIELD MOLDED SEALANTS FOR SEALING JOINTS IN RIGID PAVEMENTS

PART 1 GENERAL

1.1 REFERENCES
1.2 SUBMITTALS
1.3 SAFETY
1.4 TEST REQUIREMENTS
1.5 EQUIPMENT
1.5.1 Joint Cleaning Equipment
1.5.1.1 Tractor-Mounted Routing Tool
1.5.1.2 Concrete Saw
1.5.1.3 Sandblasting Equipment
1.5.1.4 Hand Tools
1.5.2 Sealing Equipment
1.5.2.1 Hot-Poured Sealing Equipment
1.6 DELIVERY AND STORAGE
1.7 ENVIRONMENTAL CONDITIONS

PART 2 PRODUCTS

2.1 SEALANTS
2.2 PRIMERS
2.3 BACKUP MATERIALS
2.4 BOND BREAKING TAPES

PART 3 EXECUTION

3.1 PREPARATION OF JOINTS
3.1.1 Sawing
3.1.1.1 Refacing of Joints
3.1.1.2 Refacing of Random Cracks
3.1.2 Sandblasting
3.1.3 Back-Up Material
3.1.4 Bond Breaking Tape
3.1.5 Rate of Progress of Joint Preparation
3.2 PREPARATION OF SEALANT
3.2.1 Hot-Poured Sealants
3.3 INSTALLATION OF SEALANT
3.3.1 Time of Application
3.3.2 Sealing Joints
3.4 INSPECTION
3.4.1 Joint Cleaning
3.4.2 Joint Sealant Application Equipment
3.4.3 Joint Sealant
3.5 CLEAN-UP
3.6 CONSTRUCTION QUALITY CONTROL

-- End of Section Table of Contents --

SECTION 02592

FIELD MOLDED SEALANTS FOR SEALING JOINTS IN RIGID PAVEMENTS

PART 1 GENERAL

1.1 REFERENCES

The publications listed below form a part of this specification to the extent referenced. The publications are referred to in this text by the basic designation only.

AMERICAN SOCIETY FOR TESTING AND MATERIALS (ASTM)

ASTM C 509	(1994) Elastomeric Cellular Preformed Gasket and Sealing Material
ASTM D 789	(1994) Determination of Relative Viscosity, Melting Point, and Moisture Content of Polyamide (PA)

FEDERAL SPECIFICATIONS (FS)

FS SS-S-1401	(Rev C; Am 1; Notice 1) Sealant, Joint, Non-Jet-Fuel-Resistant, Hot-Applied, for Portland Cement and Asphalt Concrete Pavements

1.2 SUBMITTALS

Government approval is required for submittals with a "GA" designation; submittals having an "FIO" designation are for information only. The following shall be submitted in accordance with Section 01300 SUBMITTAL PROCEDURES:

SD-06 Instructions

Manufacturer's Recommendations; FIO.

Where installation procedures, or any part thereof, are required to be in accordance with the manufacturer's recommendations, printed copies of these recommendations, 60 days prior to use on the project. Installation of the material will not be allowed until the recommendations are received. Failure to furnish these recommendations can be cause for rejection of the material.

SD-07 Schedules

Construction Equipment List; FIO.

List of proposed equipment to be used in performance of construction work including descriptive data, 60 days prior to use on the project.

SD-14 Samples

Materials; GA.

Samples of the materials (sealant, primer if required, and backup material), in sufficient quantity for testing and approval 60 days prior to the beginning of work. No material will be allowed to be used until it has been approved.

1.3 SAFETY

Joint sealant shall not be placed within 8 meters of any liquid oxygen (LOX) equipment, LOX storage, or LOX piping. Joints in this area shall be thoroughly cleaned and left unsealed.

1.4 TEST REQUIREMENTS

The joint sealant and backup or separating material shall be tested for conformance with the referenced applicable material specification. The Contracting Officer shall be notified in writing of the proposed sources of joint sealant at least 60 days prior to the date the materials will be required at the project site. Testing of the materials shall be performed in an approved independent laboratory and certified copies of the test reports shall be submitted and approved. If the use of a primer is recommended for the proposed sealing system, the laboratory test for bond shall be conducted using the primer in accordance with the manufacture's recommendations. The Contractor shall furnish samples of materials, in sufficient quantity to be tested, upon request. Conformance with the requirements of the laboratory tests specified will not constitute final acceptance of the materials. Final acceptance will be based on the performance of the in-place materials.

1.5 EQUIPMENT

Machines, tools, and equipment used in the performance of the work required by this section shall be approved before the work is started and shall be maintained in satisfactory condition at all times.

1.5.1 Joint Cleaning Equipment

1.5.1.1 Tractor-Mounted Routing Tool

The routing tool used for removing old sealant from the joints shall be of such shape and dimensions and so mounted on the tractor that it will not damage the sides of the joints. The tool shall be designed so that it can be adjusted to remove the old material to varying depths as required. The use of V-shaped tools or rotary impact routing devices will not be permitted. Hand-operated spindle routing devices may be used to clean and enlarge random cracks.

1.5.1.2 Concrete Saw

A self-propelled power saw with water-cooled diamond or abrasive saw blades will be provided for cutting joints to the depths and widths specified or for refacing joints or cleaning sawed joints where sandblasting does not provide a clean joint.

1.5.1.3 Sandblasting Equipment

Sandblasting equipment shall include an air compressor, hose, and long-wearing venturi-type nozzle of proper size, shape and opening. The

maximum nozzle opening should not exceed 6.4 mm (1/4 inch). The air compressor shall be portable and shall be capable of furnishing not less than 71 liters per second (150 cubic feet per minute) and maintaining a line pressure of not less than 621 kPa (90 psi) at the nozzle while in use. Compressor capability under job conditions must be demonstrated before approval. The compressor shall be equipped with traps that will maintain the compressed air free of oil and water. The nozzle shall have an adjustable guide that will hold the nozzle aligned with the joint approximately 1 inch above the pavement surface. The height, angle of inclination and the size of the nozzle shall be adjusted as necessary to secure satisfactory results.

1.5.1.4 Hand Tools

Hand tools may be used, when approved, for removing defective sealant from a crack and repairing or cleaning the crack faces.

1.5.2 Sealing Equipment

1.5.2.1 Hot-Poured Sealing Equipment

The unit applicators used for heating and installing FS SS-S-1401 joint sealant materials shall be mobile and shall be equipped with a double-boiler, agitator-type kettle with an oil medium in the outer space for heat transfer; a direct-connected pressure-type extruding device with a nozzle shaped for inserting in the joint to be filled; positive temperature devices for controlling the temperature of the transfer oil and sealant; and a recording type thermometer for indicating the temperature of the sealant. The applicator unit shall be designed so that the sealant will circulate through the delivery hose and return to the inner kettle when not in use.

1.6 DELIVERY AND STORAGE

Materials delivered to the job site shall be inspected for defects, unloaded, and stored with a minimum of handling to avoid damage. Storage facilities shall be provided by the Contractor at the job site for maintaining materials at the temperatures and conditions recommended by the manufacturer.

1.7 ENVIRONMENTAL CONDITIONS

The ambient air temperature and the pavement temperature within the joint wall shall be a minimum of 10 degrees C and rising at the time of application of the materials. Sealant shall not be applied if moisture is observed in the joint.

PART 2 PRODUCTS

2.1 SEALANTS

Sealants shall conform to the following requirement:
Type II Sealant: FS SS-S-1401

2.2 PRIMERS

The use of primers when recommended by the manufacturer of the proposed sealant is authorized in accordance with the manufacturer's instructions.

2.3 BACKUP MATERIALS

The backup material shall be a compressible, nonshrinking, nonstaining, nonabsorbing material and shall be nonreactive with the joint sealant. The material shall have a melting point at least 3 degrees C greater than the pouring temperature of the sealant being used when tested in accordance with ASTM D 789. The material shall have a water absorption of not more than 5 percent of the sample weight when tested in accordance with ASTM C 509. The backup material shall be 25 plus or minus 5 percent larger in diameter than the nominal width of the crack.

2.4 BOND BREAKING TAPES

The bond breaking tape or separating material shall be a flexible, nonshrinkable, nonabsorbing, nonstaining, and nonreacting adhesive-backed tape. The material shall have a melting point at least 3 degrees C greater than the pouring temperature of the sealant being used when tested in accordance with ASTM D 789. The bond breaker tape shall be approximately 3 mm wider than the nominal width of the joint and shall not bond to the joint sealant.

PART 3 EXECUTION

3.1 PREPARATION OF JOINTS

Immediately before the installation of the sealant, the joints shall be thoroughly cleaned to remove all laitance, curing compound, filler, protrusions of hardened concrete, and old sealant from the sides and upper edges of the joint space to be sealed.

3.1.1 Sawing

3.1.1.1 Refacing of Joints

Refacing of joints shall be accomplished using a concrete saw as specified in paragraph EQUIPMENT to saw through sawed and filler-type joints to loosen and remove material until the joint is clean and open to the full specified width and depth. The blade shall be stiffened with a sufficient number of suitable dummy (or used) blades or washers. Immediately following the sawing operation, the joint opening shall be thoroughly cleaned using a water jet to remove all saw cuttings and debris.

3.1.1.2 Refacing of Random Cracks

Sawing of the cracks shall be accomplished using a power-driven concrete saw as specified in paragraph EQUIPMENT. The saw blade shall be 152 mm (6 inch) or less in diameter to enable the saw to follow the trace of the crack. The blade shall be stiffened as necessary with suitable dummy (or used) blades or washers. Immediately following the sawing operation, the crack opening shall be thoroughly cleaned using a water jet to remove all saw cuttings and debris.

3.1.2 Sandblasting

The newly exposed concrete joint faces and the pavement surfaces extending a minimum of 13 mm from the joint edges shall be sandblasted clean. A multiple-pass technique shall be used until the surfaces are free of dust,

dirt, curing compound, filler, old sealant residue, or any foreign debris that might prevent the bonding of the sealant to the concrete. After final cleaning and immediately prior to sealing, the joints shall be blown out with compressed air and left completely free of debris and water.

3.1.3 Back-Up Material

When the joint opening is of a greater depth than indicated for the sealant depth, the lower portion of the joint opening shall be plugged or sealed off using a back-up material to prevent the entrance of the sealant below the specified depth. Care shall be taken to ensure that the backup material is placed at the specified depth and is not stretched or twisted during installation.

3.1.4 Bond Breaking Tape

Where inserts or filler materials contain bitumen, or the depth of the joint opening does not allow for the use of a backup material, a bond breaker separating tape will be inserted to prevent incompatibility with the filler materials and three-sided adhesion of the sealant. The tape shall be securely bonded to the bottom of the joint opening so it will not float up into the new sealant.

3.1.5 Rate of Progress of Joint Preparation

The stages of joint preparation which include sandblasting, air pressure cleaning and placing of the back-up material shall be limited to only that lineal footage that can be sealed during the same day.

3.2 PREPARATION OF SEALANT

3.2.1 Hot-Poured Sealants

Sealants conforming to FS SS-S-1401 shall not be heated in excess of the safe heating temperature recommended by the manufacturer as shown on the sealant containers. Sealant that has been overheated or subjected to application temperatures for over 4 hours or that has remained in the applicator at the end of the day's operation shall be withdrawn and wasted.

3.3 INSTALLATION OF SEALANT

3.3.1 Time of Application

Joints shall be sealed immediately following final cleaning of the joint walls and following the placement of the separating or backup material. Open joints that cannot be sealed under the conditions specified, or when rain interrupts sealing operations shall be recleaned and allowed to dry prior to installing the sealant.

3.3.2 Sealing Joints

Immediately preceding, but not more than 15 m ahead of the joint sealing operations, a final cleaning with compressed air shall be performed. The joints shall be filled from the bottom up to 3 mm plus or minus 1.5 mm below the pavement surface. Excess or spilled sealant shall be removed from the pavement by approved methods and shall be discarded. The sealant shall be installed in such a manner as to prevent the formation of voids and entrapped air. Traffic shall not be permitted over newly sealed pavement until authorized by the Contracting Officer. When a primer is

recommended by the manufacturer, it shall be applied evenly to the joint faces in accordance with the manufacturer's instructions. Joints shall be checked frequently to ensure that the newly installed sealant is cured to a tack-free condition within the time specified.

3.4 INSPECTION

3.4.1 Joint Cleaning

Joints shall be inspected during the cleaning process to correct improper equipment and cleaning techniques that damage the concrete pavement in any manner. Cleaned joints shall be approved prior to installation of the separating or back-up material and joint sealant.

3.4.2 Joint Sealant Application Equipment

The application equipment shall be inspected to ensure conformance to temperature requirements, proper proportioning and mixing (if two-component sealant) and proper installation. Evidences of bubbling, improper installation, failure to cure or set shall be cause to suspend operations until causes of the deficiencies are determined and corrected.

3.4.3 Joint Sealant

The joint sealant shall be inspected for proper rate of cure and set, bonding to the joint walls, cohesive separation within the sealant, reversion to liquid, entrapped air and voids. Sealants exhibiting any of these deficiencies at any time prior to the final acceptance of the project shall be removed from the joint, wasted, and replaced as specified herein at no additional cost to the Government.

3.5 CLEAN-UP

Upon completion of the project, all unused materials shall be removed from the site and the pavement shall be left in a clean condition.

3.6 CONSTRUCTION QUALITY CONTROL

Attention is directed to SECTION: CONSTRUCTION QUALITY CONTROL which requires the Contractor to perform quality control inspection, testing, and reporting.

-- End of Section --

SECTION TABLE OF CONTENTS

DIVISION 02 - SITE WORK

SECTION 02611

CONCRETE PAVEMENT FOR PADS

PART 1 GENERAL

1.1 REFERENCES
1.2 SUBMITTALS
1.3 GENERAL REQUIREMENTS
1.3.1 Composition
1.3.2 Strength and Air Content
1.3.3 Production, Sampling and Testing of Aggregates
1.4 DELIVERY AND STORAGE OF MATERIALS
1.4.1 Cement and Pozzolan
1.4.2 Aggregates
1.5 GRADE CONTROL
1.6 PROPORTIONING
1.6.1 Mixture Proportions
1.6.1.1 Average Strength
1.6.1.2 Test Records Exceeding 29
1.6.1.3 Test Records Less Than 29
1.6.2 Measurement
1.6.3 Workability
1.7 EQUIPMENT, APPROVAL AND MAINTENANCE

PART 2 PRODUCTS

2.1 AGGREGATE
2.1.1 Size and Grading
2.1.2 Deleterious Substances
2.1.3 Sand
2.2 ADMIXTURES
2.2.1 Air-entraining Admixture
2.2.2 Retarder
2.2.3 Water-Reducer
2.3 CEMENTITIOUS MATERIALS
2.3.1 Cement
2.3.2 Portland-Pozzolan Cement
2.3.3 Pozzolan
2.4 CURING MATERIALS
2.5 DOWELS
2.6 JOINT FILLER
2.6.1 For Expansion Joints
2.6.2 For Contraction Joints
2.7 REINFORCEMENT
2.7.1 Bar mats
2.7.2 Reinforcing bars
2.8 WATER
2.9 EPOXY RESIN

PART 3 EXECUTION

3.1 SUBGRADE, BASE, FORMS, AND STRINGLINE
3.1.1 Underlying Material
3.1.2 Forms
3.1.2.1 Steel Forms
3.1.2.2 Wood Forms
3.1.3 Form Setting
3.1.4 Stringline
3.1.5 BATCHING, MIXING AND TRANSPORTATION
3.1.5.1 Type of Plant
3.1.5.1.1 Scales
3.2 Protection
3.3 Concrete Mixers
3.3.1 General Requirements
3.3.2 Truck Mixers
3.4 Transportation Equipment
3.5 PLACING
3.5.1 General
3.5.2 Placing Reinforcing Steel
3.5.3 Placement During Cold Weather
3.5.4 Placing During Warm Weather
3.6 FIELD TEST SPECIMENS
3.6.1 General
3.6.2 Specimens for Strength Tests
3.7 FINISHING
3.7.1 Machine Finishing - Fixed Forms
3.7.1.1 Equipment
3.7.1.2 Finishing
3.7.1.3 Mechanical Floating
3.7.1.4 Other Types of Finishing Equipment
3.7.2 Hand Finishing
3.7.2.1 Equipment
3.7.2.2 Finishing and Floating
3.7.3 Surface Correction and Testing
3.7.4 Texturing
3.7.4.1 Burlap-Drag Texture
3.7.5 Edging
3.7.6 Outlets in Pavement
3.8 CURING
3.8.1 General
3.8.2 Curing Procedures
3.8.2.1 White Burlap-polyethylene Sheet
3.8.2.2 Membrane Curing
3.9 FORM REMOVAL
3.10 PLAN GRADE AND SURFACE-SMOOTHNESS REQUIREMENTS
3.10.1 Plan Grade
3.10.2 Surface Smoothness
3.11 SURFACE TESTS, DEFICIENCIES AND CORRECTIONS
3.11.1 Equipment
3.11.2 Grade Conformance Tests
3.11.3 Surface-smoothness Determinations
3.11.4 Deficiencies and Corrections
3.12 TOLERANCES IN PAVEMENT THICKNESS
3.12.1 Thickness Determination
3.12.2 Permissible Deficiency
3.12.2.1 Pavement Deficient in Thickness
3.13 REPAIRS OF DEFECTIVE PAVEMENT SLABS
3.13.1 Spalls

3.13.2 Broken Slabs
3.13.2.1 Materials
3.13.2.2 Epoxy Injection
3.13.2.2.1 Preparation of Crack Area
3.14 Epoxy Injection Placement
3.15 REMOVAL AND REPLACEMENT OF DEFECTIVE PAVEMENT AREAS
3.16 JOINTS
3.16.1 Longitudinal Construction Joints
3.16.2 Transverse Construction Joints
3.16.3 Expansion Joints
3.16.4 Contraction Joints
3.16.4.1 Sawed Joints
3.16.5 Dowels
3.16.5.1 Fixed Form Installation
3.16.6 Sealed Joints
3.17 PAVEMENT PROTECTION
3.18 CONTRACTOR QUALITY CONTROL
3.18.1 General
3.18.2 Inspection Details and Frequency of Testing
3.18.2.1 Fine Aggregate
3.18.2.1.1 Grading
3.19 Moisture Content
3.20 Coarse Aggregate
3.21 Deleterious Materials
3.22 Scales
3.23 Batch-Plant Control
3.24 Concrete
3.24.1 Air Content Tests
3.24.2 Slump Tests
3.24.3 Test Cylinders
3.25 Curing
3.26 Reports
3.27 CONSTRUCTION QUALITY CONTROL

-- End of Section Table of Contents --

SECTION 02611

CONCRETE PAVEMENT FOR PADS

PART 1 GENERAL

1.1 REFERENCES

The publications listed below form a part of this specification to the extent referenced. The publications are referred to in the text by basic designation only.

AMERICAN CONCRETE INSTITUTE (ACI)

ACI 211.1	(1991) Standard Practice for Selecting Proportions for Normal, Heavyweight, and Mass Concrete

AMERICAN SOCIETY FOR TESTING AND MATERIALS (ASTM)

ASTM A 184	(1990) Fabricated Deformed Steel Bar Mats for Concrete Reinforcement
ASTM A 615	(1996) Deformed and Plain Billet-Steel Bars for Concrete Reinforcement
ASTM A 675	(1990) Steel Bars, Carbon, Hot-Wrought, Special Quality Mechanical Properties.
ASTM C 31	(1991) Making and Curing Concrete Test Specimens in the Field
ASTM C 33	(1993) Concrete Aggregates
ASTM C 70	(1985) Surface Moisture in Fine Aggregate.
ASTM C 94	(1996) Ready-Mixed Concrete
ASTM C 117	(1990) Materials Finer than No. 75-um (No. 200) Sieve in Mineral Aggregates by washing.
ASTM C 123	(1994) Lightweight Pieces in Aggregate.
ASTM C 136	(1995a) Sieve Analysis of Fine and Coarse Aggregates
ASTM C 142	(1978; R 1990) Clay Lumps and Friable Particles in Aggregates.
ASTM C 143	(1990a) Slump of Hydraulic Cement Concrete
ASTM C 150	(1996) Portland Cement
ASTM C 171	(1995) Sheet Materials for Curing Concrete

ASTM C 174	(1987, R 1991) Measuring Length of Drilled Concrete Cores.
ASTM C 192	(1990a) Making and Curing Concrete Test Specimens in the Laboratory
ASTM C 231	(1991b) Air Content of Freshly Mixed Concrete by the Pressure Method
ASTM C 260	(1995) Air-Entraining Admixtures for Concrete
ASTM C 295	(1990) Petrographic Examination of Aggregates for Concrete.
ASTM C 494	(1992) Chemical Admixtures for Concrete
ASTM C 566	(1989) Total Moisture Content of Aggregate by Drying.
ASTM C 595	(1995a) Blended Hydraulic Cements
ASTM C 618	(1996a) Coal Fly Ash and Raw or Calcined Natural Pozzolan for Use as a Mineral Admixture in Portland Cement Concrete
ASTM C 881	(1990) Epoxy-Resin-Base Bonding Systems for Concrete
ASTM D 1751	(1983; R 1991) Preformed Expansion Joint Filler for Concrete Paving and Structural Construction (Nonextruding and Resilient Bituminous Types)
ASTM D 1752	(1984; R 1992) Preformed Sponge Rubber and Cork Expansion Joint Fillers for Concrete Paving and Structural Construction
ASTM D 2828	(1971; R 1981) Nonbituminous Inserts for Contraction Joints in Portland Cement Concrete Airfield Pavements, Sewable Type.

U.S. ARMY CORPS OF ENGINEERS HANDBOOK FOR CEMENT AND CONCRETE (CRD)

COE CRD-C 130	(1989) Scratch Hardness of Coarse Aggregate Particles.
COE CRD-C 300	(1990) Specifications for Membrane-Forming Compounds for Curing Concrete

NATIONAL INSTITUTE OF STANDARDS AND TECHNOLOGY (NIST)

NIST HB 44	(1995) NIST Handbook 44: Specifications, Tolerances, and Other Technical Requirements for Weighing and Measuring Devices

1.2 SUBMITTALS

Government approval is required for submittals with a "GA" designation; submittals having an "FIO" designation are for information only. The following shall be submitted in accordance with Section 01300 SUBMITTAL DESCRIPTIONS:

SD-09 Reports

Proportions of Mix; GA.

The results of trial mix along with a statement giving the maximum nominal coarse aggregate size and the proportions of all ingredients that will be used in the manufacture of each strength of concrete, at least 30 days prior to commencing concrete placing operations. Mix proportioning shall be the responsibility of the Contractor. Aggregate weights shall be based on the saturated surface dry condition. The statement shall be accompanied by test results from an independent commercial testing laboratory, attesting that the proportions selected will produce concrete of the qualities indicated. No substitutions shall be made in the materials used in the work without additional tests to show that the quality of the concrete is satisfactory.

SD-01 Data

Plant and Equipment; GA.

Submittals for approval on plant, equipment, and construction methods shall be made no later than 60 days prior to initial placement. The Contracting Officer shall be given access at all times to all parts of the plant and equipment for checking adequacy of the equipment in use; operation of the plant, verifying weights, proportions, temperature, mixing time, and character of the materials.

SD-09 Reports

Sampling and Testing; FIO.

Certified copies of laboratory test reports, including all test data, for admixtures, expansion joint filler, and curing compounds. These tests shall be made by an approved commercial laboratory or by a laboratory maintained by the manufacturers of the materials.

SD-09 Reports

Deleterious Materials; FIO.

Certified copies of laboratory test reports, including all test data, for deleterious materials. These tests shall be made by an approved commercial laboratory or by a laboratory maintained by the manufacturers of the materials.

SD-13 Certificates

Cementitious Materials; FIO.

Manufacturer's certification of compliance, accompanied by mill test

reports attesting that the materials meet the requirements of the specification under which it is furnished for cement or pozzolan. No cement or pozzolan shall be used until notice of acceptance has been given. Cement or pozzolan may be subjected to check testing by the Government from samples obtained at the mill, at transfer points, or at the project site.

1.3 GENERAL REQUIREMENTS

1.3.1 Composition

Concrete shall be composed of cementitious material, fine aggregate, coarse aggregate, water, an air entraining admixture, and at the option of the contractor, other admixtures.

1.3.2 Strength and Air Content

The proportioning of the mix, which shall be based on ACI 211.1, shall use materials approved by the Contracting Officer and in conformance with these specifications, shall be the responsibility of the Contractor. The Contractor shall design the mix to achieve a compressive strength of 28 Mpa at 28 days. Compressive strength shall be determined from laboratory cylinders in accordance with ASTM C 192. Seven day strengths are taken for the purpose of determining early strength of the concrete for construction loading and are not to be considered in evaluating the 28 day strength of the concrete. The air content of the concrete shall be maintained at 6 percent plus or minus 1 percent. The Contracting Officer shall be notified prior to any changes to the proportions of the mix.

1.3.3 Production, Sampling and Testing of Aggregates

For each shift of concrete paving operation, the Contractor shall perform grading, fineness modulus, moisture content, particle shape tests and certain tests for suspect deleterious substances to determine conformance with the specification requirements. Grading, fineness modulus, moisture content, and particle shape tests shall be performed in accordance with PARAGRAPH: CONTRACTOR QUALITY CONTROL. Tests for suspect deleterious substances shall be performed on aggregate samples taken from the aggregate plant. During the first part of the paving operation, sampling and testing for these tests should be once every shift of concrete placement. When the test data from four consecutive tests for each type of testing show only test results which comply with the provisions in these specifications, the frequency of the testing, on approval of the Contracting Officer, may be reduced.

1.4 DELIVERY AND STORAGE OF MATERIALS

1.4.1 Cement and Pozzolan

Cementitious materials shall be dry and free from lumps and caking when delivered. Immediately upon receipt at the site of the work, cementitious materials shall be stored in a dry, weathertight, and properly ventilated structure.

1.4.2 Aggregates

Each size of aggregate shall be stored separately in free-draining stockpiles and shall be handled and stored in such manner as to avoid breakage, segregation, or contamination by foreign materials.

1.5 GRADE CONTROL

The lines and grades shown for each pavement category of the contract shall be established and maintained by means of line and grade stakes placed at the jobsite by the Contractor in accordance with the SPECIAL PROVISIONS. Elevations of all bench marks used by the Contractor for controlling pavement operations at the jobsite and for finished pavement grade lines and elevations will be established and maintained by the Government.

1.6 PROPORTIONING

1.6.1 Mixture Proportions

The proportions of all material entering into the concrete mixtures shall be as determined in Paragraph: STRENGTH AND AIR CONTENT. The proportions will be changed only when necessary to maintain the workability, strength, and standard of quality required for the concrete covered by these specifications, and to meet the varying conditions encountered during the construction. Changes shall be the responsibility of the Contractor, and the Contracting Officer shall be notified in writing. The use of pozzolan shall be mandatory at a mass of 15 to 35 percent of the total cementitious material used in the mix.

1.6.1.1 Average Strength

In meeting the strength requirements specified, the selected mixture proportion shall produce an average compressive strength exceeding the specified strength by the amount indicated below. Where a concrete production facility has test records, a standard deviation shall be established. Test records from which a standard deviation is calculated shall represent materials, quality control procedures, and conditions similar to those expected; shall represent concrete produced to meet a specified strength or strengths within 7 Mpa of that specified for proposed work; and shall consist of at least 30 consecutive tests. A strength test shall be the average of the strengths of two cylinders made from the same sample of concrete and tested at 28 days or at other test age designated for determination of the specified strength.

1.6.1.2 Test Records Exceeding 29

Required average compressive strength used as the basis for selection of concrete proportions shall be the larger of the specified strength plus the standard deviation multiplied by 1.34 or the specified strength plus the standard deviation multiplied by 2.33 minus 500.

1.6.1.3 Test Records Less Than 29

Where a concrete production facility does not have test records meeting the above requirements but does have a record based on 15 to 29 consecutive tests, a standard deviation may be established as the product of the calculated standard deviation and a modification factor from the following table:

No. of tests (1)	Modification factor for standard deviation
less than 15	See Note

No. of tests (1)	Modification factor for standard deviation
15	1.16
20	1.08
25	1.03
30 or more	1.00

(1) Interpolate for intermediate numbers of tests.

Note: When a concrete production facility does not have field strength test records for calculation of standard deviation or the number of tests is less than 15, the required average strength shall be:

a. The specified strength plus 7 specified strength of less than 21 MPa.

b. The specified strength plus 8 for specified strengths of 21 to 35 MPa.

1.6.2 Measurement

All aggregates and cementitious materials shall be measured by weight. Mixing water and air-entraining admixtures may be measured by volume or by weight.

1.6.3 Workability

The water content of the concrete shall be the minimum necessary to obtain the workability required for the specific conditions and methods of placement. The slump of the concrete shall be maintained at the lowest practical value and shall not exceed 75 mm for concrete placement using fixed forms or 30 mm for slip-form placement, when tested in accordance with ASTM C 143. Every effort shall be made to insure that the concrete, as it reaches the paver, is as uniform as possible from batch to batch. If wet batches are encountered, they shall be wasted. If the addition of water is necessary to provide the required slump to the mixed concrete, the mixture design water-cement ratio shall not be exceeded.

1.7 EQUIPMENT, APPROVAL AND MAINTENANCE

Dependable and sufficient equipment that is appropriate and adequate to meet the approved plan and schedule for the work specified shall be furnished by the Contractor and assembled at the work site sufficiently early before the start of paving to permit thorough inspection, calibration of weighing and measuring devices, adjustment of parts, and making required repairs. The equipment shall be approved in writing by the Contracting Officer and maintained in good working condition by the Contractor.

PART 2 PRODUCTS

2.1 AGGREGATE

Fine and coarse aggregates shall conform to ASTM C 33 and the requirements herein. Coarse aggregate shall consist of crushed or uncrushed gravel, crushed stone, or a combination thereof. Aggregates as delivered to the

mixers shall consist of clean, hard, uncoated particles meeting the requirements of ASTM C 33. Dust and other coating shall be removed from the coarse aggregates by washing. Fine aggregate shall consist of natural and/or manufactured sand, or a combination of the two, and shall be composed of clean, hard, durable particles. Dust and other coating shall be removed from the coarse aggregates by washing.

2.1.1 Size and Grading

The maximum nominal size of the coarse aggregate shall be 38 mm in accordance with ASTM C 33 Table 2, Size No. 467.

2.1.2 Deleterious Substances

The amount of deleterious substances in each size group shall not exceed the limits shown below, determined in accordance with ASTM C 142, ASTM C 117, ASTM C 123, ASTM C 295 and COE CRD-C 130 (applicable only to material coarser than 9.5 mm).

Deleterious Materials

Material	Percentage by Weight	
	Coarse Aggregate(1)	Fine Aggregate (2)
Clay lumps and friable particles	1.0	1.0
Material finer than No. 200 sieve	1.0 (3)	3.0
Lightweight particles	1.0 (4)	0.5
Other soft particles	2.0	

NOTES:

1 The total of all deleterious substances shall not exceed 4.0 percent of the weight of the aggregate. The percentage of material finer than No. 200 sieve shall not be included in this total.

2 The total of all deleterious materials shall not exceed 3.0 percent of the weight of the aggregate. Sand shall be washed if material is found to have material finer than the 200 sieve.

3 Limit for material finer than No. 200 sieve will be increased to 1.5 percent for crushed aggregates consisting of crusher dust that is essentially free from clay or shale.

4 The separation medium shall have specific gravity of 2.0.

2.1.3 Sand

Maximum percentage of sand by total weight of saturated surface dry aggregate shall be 40%.

2.2 ADMIXTURES

Admixtures shall conform to the following:

2.2.1 Air-entraining Admixture

Air-entraining admixture shall be an approved substance or compound conforming to ASTM C 260.

2.2.2 Retarder

A retarding admixture shall meet the requirements of ASTM C 494, Type B, except that the 6-month and 1-year compressive strength tests are waived. The use of the admixture is at the option of the Contractor and may only be used for fixed form placement method. Retarder may not be used for slipform placing method.

2.2.3 Water-Reducer

A water-reducing admixture shall meet the requirements of ASTM C 494, Type A except that the 6-month and 1-year compressive strength tests are waived. The admixture may be added to the concrete mixture only when its use is approved or directed. A type D admixture shall not be used in mixes used for slip-form paving.

2.3 CEMENTITIOUS MATERIALS

2.3.1 Cement

Cement shall be portland cement conforming to ASTM C 150, Type II, Low Alkali Cement. The physical requirements for false set shall apply.

2.3.2 Portland-Pozzolan Cement

Portland-pozzolan cement shall conform to the requirements of ASTM C 595, Type IP, but shall meet the volume requirements noted in the last sentence of paragraph 1.6.1 Mixture Proportioning.

2.3.3 Pozzolan

Pozzolan shall conform to ASTM C 618, Class F. Supplementary physical requirements in Table 1A & 2A shall apply including reactivity with alkalies. Maximum loss on ignition for pozzolan shown in Table 1 of ASTM C 618 shall be 3.0 percent.

2.4 CURING MATERIALS

Curing materials shall conform to the following:

a. White burlap-polyethylene sheet shall conform to ASTM C 171.
b. Membrane curing compound shall be a pigmented type conforming to Corps of Engineers Specification COE CRD-C 300.

2.5 DOWELS

Dowels shall be plain steel bars conforming to ASTM A 675, grade 80, and of the sizes and dimensions indicated.

2.6 JOINT FILLER

2.6.1 For Expansion Joints

Filler shall be preformed materials conforming to ASTM D 1751 or ASTM D 1752.

2.6.2 For Contraction Joints

Sewable type contraction joint inserts shall conform to ASTM D 2828.

2.7 REINFORCEMENT

All reinforcement shall be free from loose flaky rust, loose scale, oil, grease, mud, or other coatings that might reduce and bond with concrete.

2.7.1 Bar mats

Bar mat shall conform to ASTM A 184

2.7.2 Reinforcing bars

Reinforcing bars shall conform to ASTM A 615, grade 40

2.8 WATER

Water for washing aggregate and for mixing and curing concrete shall be fresh and free from injurious amounts of oil, acid, salt, alkali, organic matter, or other deleterious substances.

2.9 EPOXY RESIN

Epoxy resin shall conform to ASTM C 881.

PART 3 EXECUTION

3.1 SUBGRADE, BASE, FORMS, AND STRINGLINE

3.1.1 Underlying Material

The prepared surface of the subgrade or base course material shall be kept free of foreign matter, waste concrete and/or cement, and debris at all times and shall be thoroughly wetted down sufficiently in advance to insure a firm, moist condition when the concrete is placed. In cold weather the underlying material shall be prepared and so protected that it will be entirely free from frost when the concrete is placed. The use of chemicals to eliminate frost in the underlying material will not be permitted. Crossing of the prepared subgrade at specified intervals for construction purposes may be permitted for any type of subgrade, provided rutting or indentations do not occur. If traffic has been allowed to use the prepared subgrade, the surface shall be checked and corrected before concrete is placed.

3.1.2 Forms

Forms shall be of steel, except that wood forms may be used on curves having a radius of 45 meters or less, and for fillets. Forms shall be equal in depth to the edge thickness of the slab as shown, and shall not be built up except as permitted below. When the project required several different slab thicknesses, forms may be built up with metal or wood to provide an increase in depth of not more than 25 percent.

3.1.2.1 Steel Forms

Steel forms shall be furnished in sections not less than 3 meter in length, except that on curves having a radius of 45 meters or less, the length of the sections shall be five feet unless the sections are flexible or curved to the proper radius. The top surface of a form shall vary not more than 3

mm in 3 meter from a true line. The face of the form shall vary not more than 6 mm in 3 meter from a true plan. Forms with battered top surfaces, warps, bends, kinks, or distorted faces or bases shall be removed from the project.

3.1.2.2 Wood Forms

Wood forms for curves and fillets shall be made of well-seasoned surfaced plank or plywood, straight, and free from warp or bend. Wood forms shall be adequate in strength and rigidly braced.

3.1.3 Form Setting

The forms shall be set on firm material cut true to grade so that each form section when placed will be firmly in contact with the underlying layer for its entire length and base width. The length of pins and quantity provided in each section shall be sufficient to hold the form at the correct line and grade. When tested by a 3.7-meters straight-edge, the top of the form shall conform to the requirements specified for the finished surface of the concrete. Forms shall be set well in advance of concrete placement. They shall be cleaned and oiled each time before concrete is placed.

3.1.4 Stringline

Stringline shall be accurately and securely installed well in advance of concrete placement. Staked supports shall be placed at intervals to eliminate sag with the stringline is tightened. The stringline shall be high strength wire that will allow sufficient tension to be applied to remove sag between supports. The stringline at the supports shall be easily adjusted in both the horizontal and vertical directions. When necessary to leave gaps in the stringline, supports on either side of the gap shall be secured to avoid disturbing the remainder of the stringline when the portion across the gap is positioned and tightened. Vertical and horizontal positioning of the stringline shall be such that the finished pavement shall conform to the alinement and grade elevations shown.

3.1.5 BATCHING, MIXING AND TRANSPORTATION

3.1.5.1 Type of Plant

The Contractor shall provide semiautomatic or automatic concrete plant conforming to the applicable requirements of ASTM C 94, except as specified below. The concrete plant may be located on or off the Government premises as approved.

3.1.5.1.1 Scales

The Contractor shall provide standard test weights and any other auxiliary equipment required for checking the operating performance of each scale or other measuring device. Periodic tests shall be made when and as directed, in the presence of the Contracting Officer. Upon completion of each check test and before further use of the indicating, or control devices, such adjustments, repairs, or replacements shall be made as required to secure satisfactory performance.

3.2 Protection

Weighing, indicating, recording and control equipment shall be protected against exposure to dust and weather.

3.3 Concrete Mixers

3.3.1 General Requirements

The mixing time will be increased when necessary to secure the required uniformity and consistency of the concrete. Excessive overmixing requiring additions of water will not be permitted. The mixers shall be maintained in satisfactory operating condition, and mixer drums shall be kept free of hardened concrete. Mixer blades shall be replaced when worn down more than 10 percent of their original depth. The use of a mixer that at any time produces unsatisfactory results shall be promptly discontinued until repaired.

3.3.2 Truck Mixers

Truck mixers shall be used for fixed form placement. Transportation of concrete batched at a batch plant shall be transported to the point of placement by truck agitator or truck mixer. Truck mixers, the mixing of concrete therein, and concrete uniformity, shall conform to the requirements of ASTM C 94. A truck mixer may be used either for complete mixing (transit mixing) or to finish the partial mixing done in a stationary mixer (shrink-mixed). Each truck shall be equipped with two counters from which it will be possible to determine the number of revolutions at mixing speed and the number of revolutions at agitating speed.

3.4 Transportation Equipment

All transporting equipment shall conform to ASTM C 94 except as modified herein. Vehicles and equipment transporting concrete shall be capable of delivering and discharging the concrete without segregation. The transfer and distribution of the concrete from vehicles shall be by mechanical spreader, or concrete bucket and crane.

3.5 PLACING

3.5.1 General

Concrete shall be placed between stationary forms. When concrete is truck mixed or when a truck mixer or a agitator is used for transporting concrete, the concrete shall be deposited between the stationary forms within 1-1/2 hours from the time the cement is introduced to the aggregates. When the length of haul makes it impossible to deliver truck mixed concrete within these time limits, batching of cement and a portion of the mixing water shall be delayed until the truck mixer is at or near the construction site. At no case shall the water cement ratio of the proposed mix be exceeded by the addition of extra mixing water. Concrete shall be deposited as close as possible to its final position in the pavement cross section.

3.5.2 Placing Reinforcing Steel

The type and amount of steel reinforcement shall be as shown on the drawings. For pavement thickness of 305 mm or more, the reinforcement steel shall be installed by the strike-off method wherein the concrete is deposited on the underlying material, consolidated and struck to the indicated elevation of the steel reinforcement. The reinforcement shall be laid upon the prestruck surface, and the remaining concrete shall then be

placed and finished in the required manner. Any portions of the bottom layer of concrete that have been placed more than 30 minutes without being covered with the top layer shall be removed and replaced with newly mixed concrete without additional cost to the Government. For pavements less than 305 mm thick, the reinforcement may be positioned on suitable chairs prior to concrete placement.

3.5.3 Placement During Cold Weather

Concrete placement shall be discontinued when the air temperature reaches 4 degrees C and is falling and shall not be resumed until the air temperature reaches 2 degrees C and is rising. Provision shall be made to protect the concrete from freezing during the specified curing period. Concrete damaged by freezing shall be removed and replaced in conformance with Paragraph: REMOVAL AND REPLACEMENT OF DEFECTIVE PAVEMENT AREAS below.

3.5.4 Placing During Warm Weather

During periods of warm weather when the maximum daily air temperature is likely to exceed 29 degrees C, the following precautions shall be taken. The forms shall be sprinkled with water immediately before placing the concrete. The concrete temperature shall not exceed 32 degrees C when placed. The aggregates and/or mixing water shall be cooled as necessary.

3.6 FIELD TEST SPECIMENS

3.6.1 General

Concrete samples shall be furnished by the Contractor, and shall be taken in the field by the Contractor at his expense to determine the slump, air content, and strength of the concrete. Cylinders will be made for determining conformance with the strength requirements of these specifications and, when required, for determining the time at which pavements may be placed in service. The air content will be determined in conformance with ASTM C 231. Test cylinders shall be molded and cured in conformance with ASTM C 31. The Contractor shall furnish all materials, labor and facilities required for molding, curing, and protecting test cylinders at the site and under the supervision of the Contracting Officer.

3.6.2 Specimens for Strength Tests

Compressive strength cylinders shall be made each shift that concrete is placed. Each group of cylinders shall be molded from the same batch of concrete, and shall consist of a sufficient number of specimens to provide two tests at each test age. One group of specimens shall be made during each shift. However, at the start of paving operations and when the aggregate source, aggregate characteristics, or mix design is changed, additional groups of test cylinders may be required until the Contracting Officer is satisfied that the concrete mixture being used complies with the strength requirements of these specifications. Test ages shall be 7 days and 28 days.

3.7 FINISHING

Finishing operations shall be started immediately after concrete placement. Finishing shall be by the machine method except that where so indicated, the hand method will be permitted on odd slab widths or shapes and in event of breakdown of the mechanical equipment to finish concrete. The sequence of operations shall be as follows: screeding, consolidation, floating,

straight edging, and texturing.

3.7.1 Machine Finishing - Fixed Forms

3.7.1.1 Equipment

The finishing machine shall be operated to strike-off screed, and consolidate the concrete. Machines that cause displacement of side forms or that cause frequent delays due to mechanical failure shall be replaced. Finishing machines riding the edge of a previously constructed slab shall be made to protect the surface to these slabs.

3.7.1.2 Finishing

The finishing machine shall make as many trips over each area of pavement as necessary to compact the concrete and produce a surface of uniform texture, true to grade. However, excessive manipulation that brings to the surface an excess of mortar and water will not be permitted, and any equipment that cannot produce the required compaction and surface finish without an excessive number of trips will be considered unsatisfactory. The top of the form or pavement edge upon which the finishing machine travels shall be kept clean.

3.7.1.3 Mechanical Floating

After completion of finishing, the mechanical float shall be operated to smooth and finish the pavement to grade. If required, additional concrete shall be placed and screeded, and the float operated over the same area until a satisfactory surface is produced.

3.7.1.4 Other Types of Finishing Equipment

Concrete finishing equipment of types other than specified above may be used on a trial basis. The use of equipment that fails to produce finished concrete of the quality and consistency required by these specifications shall be discontinued, and the concrete shall be finished with approved equipment and in the manner specified above.

3.7.2 Hand Finishing

3.7.2.1 Equipment

Vibrators, a strike template, and a longitudinal float shall be provided for hand finishing. The template shall be at least 305 mm longer than the width of pavement being finished and shall be of an approved design, sufficiently rigid to retain its shape, and constructed of metal or other suitable material shod with metal. The longitudinal float shall be at least 3 meters long, of approved design, rigid and substantially braced and shall maintain a plane surface on the bottom of the base.

3.7.2.2 Finishing and Floating

After vibration, the concrete shall be struck off and screeded to the crown, cross section, and elevation required. If necessary, additional concrete shall be placed and screeded, and the float operated until a satisfactory surface has be produced.

3.7.3 Surface Correction and Testing

After transverse finishing is completed but while the concrete is stall plastic, the surface shall then be tested for trueness with a 3.7 meters straightedge held in successive positions parallel and at right angles to the centerline of the pavement, and the whole area covered as necessary to detect variations. The straightedge shall be advanced along the pavement in successive stages. Depressions shall be immediately filled with freshly mixed concrete, struck off, consolidated, and refinished. Projections above the required elevation shall also be struck off and refinished. The straightedge testing and finishing shall continue until the entire surface of the concrete is free from observable departure from the straightedge and conform to the surface requirements specified under subparagraph: "Surface Smoothness" below.

3.7.4 Texturing

Before the surface sheen has disappeared and before the concrete becomes nonplastic, the surface of the pavement shall be given the texture as described below.

3.7.4.1 Burlap-Drag Texture

Surface texture shall be applied by dragging the surface of the pavement, in the direction of the concrete placement, with an approved multiple-ply burlap drag at least 0.9 meter in width and equal in length to the width of the slab. The leading transverse edge of the drag shall be securely fastened to a lightweight pole or traveling bridge, and at least 305 mm of the burlap shall be in contact with the pavement during dragging operation. The drag shall be operated with the burlap moist and the burlap shall be cleaned and changed as required. The dragging shall be done so as to produce a uniform finished surface having a fine sandy texture without disfiguring marks.

3.7.5 Edging

After texturing has been completed, the edge of slabs along the forms, where indicated or directed, shall be carefully finished with an edging tool to form a smooth surface of the required radius. Tool marks shall be eliminated, and the edges shall be smooth and true to line. No edging shall be performed on the edges of slipformed lanes.

3.7.6 Outlets in Pavement

Recesses for the tie down anchors and other outlets in the pavement shall be constructed to conform to the details and dimensions shown. The concrete in these areas shall be carefully finished to provide a surface of the same texture as the surrounding area that will be within the requirements of PLAN GRADE AND SURFACE-SMOOTHNESS REQUIREMENTS below.

3.8 CURING

3.8.1 General

Concrete shall be protected against loss of moisture and rapid temperature changes for at least seven days from the beginning of the curing operation. Unhardened concrete shall be protected from rain and flowing water. All equipment needed for adequate curing and protection of the concrete shall be on hand and ready to install before actual concrete placement begins. If any selected method of curing does not afford the proper curing and protection against concrete cracking, the damaged pavement will be removed

and replaced and another method of curing shall be employed as directed.

3.8.2 Curing Procedures

Concrete curing shall be continued for the duration of the required curing period by the following method.

3.8.2.1 White Burlap-polyethylene Sheet

White burlap-polyethylene covers shall be at least 305 mm longer than necessary to cover the entire width and edge of the pavement lane. Adjacent mats shall overlap at least 152 mm. The mats shall be thoroughly wetted before placing and shall be kept continuously wet and in intimate contact with the pavement edges and surface for the duration of the required curing period

3.8.2.2 Membrane Curing

A uniform coating of white pigmented membrane curing compound shall be applied to the entire exposed surface of the concrete as soon after finishing as free water has disappeared from the finished surface. Formed surfaces shall be coated immediately after the forms are removed and in no case longer than one hour after removal of forms. The concrete shall not be allowed to dry before the application of the membrane. If any drying has occurred, the surface of the concrete shall be moistened with a fine spray of water, and the curing compound applied as soon as the free water disappears. The curing compound shall be applied to the finished surfaces by means of an approved multiple nozzle automatic spraying machine. The curing compound in the drum used for the spraying operation shall be thoroughly and continuously agitated mechanically throughout the full depth of the drum during the application. The curing compound shall be applied with a coverage rate of not more than 4.9 meters square per liter. The application of curing compound by hand-operated pressure sprayers will be permitted only on odd widths or shapes of slabs where indicated, and on concrete surfaces exposed by the removal of forms. Concrete surfaces that are subjected to heavy rainfall within three hours after the curing compound has been applied shall be resprayed by the method and at the coverage specified above. Areas where the curing compound is damaged by subsequent construction operations within the curing period shall be resprayed.

3.9 FORM REMOVAL

Forms shall remain in place at least 12 hours after the concrete has been placed. When conditions are such that the early-strength gain of the concrete is delayed, the forms shall be left in place for a longer period as directed. Forms shall be removed without injuring the concrete. Any concrete found defective after form removal shall be satisfactorily repaired promptly.

3.10 PLAN GRADE AND SURFACE-SMOOTHNESS REQUIREMENTS

The finished surfaces of airfield and heliport pavement, when tested as specified below in SURFACE TESTS, DEFICIENCIES, AND CORRECTIONS, shall conform to the grade line and elevations shown and the surface-smoothness requirements specified herein.

3.10.1 Plan Grade

The finished surfaces of the pavement shall conform, within the tolerances shown in Table 1, to the lines, grades, and cross sections shown. The finished surface of the pavements shall vary not more than 12.7 mm above or below the plan grade line or elevation established and approved at the jobsite in accordance with GRADE CONTROL above. However, the above 12.7 mm deviation from the approved grade line and elevation will not be permitted in areas where closer conformance with planned grade and elevation is required for the proper functioning of appurtenant structures. The finished surfaces of new abutting pavements shall coincide at their juncture. Where a new pavement abuts an existing pavement, transition pavement strip of the type and dimensions indicated shall be installed.

3.10.2 Surface Smoothness

The finished surface of pavements shall have no abrupt change of 3.2 mm or more and shall not deviate from the testing edge of an approved 3.7 m straightedge more than the tolerances shown for the respective pavement category in Table 1 below:

TABLE 1

Item No.	Pavement Category	Direction of Testing	Tolerances
1.	All paved areas	Longitudinal	6.4 mm
		Transverse	6.4 mm

3.11 SURFACE TESTS, DEFICIENCIES AND CORRECTIONS

The finished surface of each pavement category of the contract shall be tested for conformance with the respective requirements of PLAN GRADE AND SURFACE-SMOOTHNESS REQUIREMENTS above.

3.11.1 Equipment

The Contractor shall furnish and maintain at the jobsite in good condition, one 3.7 m straightedge for each paving spread for use in testing the fresh and hardened portland-cement concrete surfaces. These straightedges shall be constructed of aluminum or magnesium alloy and shall have blades of box or box-girder cross section with flat bottom, adequately reinforced to insure rigidity and accuracy. Straightedges shall have handles for operation on the pavement.

3.11.2 Grade Conformance Tests

Each pavement category will be checked for conformance with subparagraph Plan Grade above. The finished surface will be treated by the Contracting Officer by running lines of levels at intervals of 7.6 m or less apart longitudinally and transversely to determine the elevation of the completed pavement. Within 30 days after the completion of concrete placement in the respective pavement areas, the Contracting Officer will inform the Contractor in writing of all areas defective in plan-grade requirements.

3.11.3 Surface-smoothness Determinations

After the concrete has hardened sufficiently to permit walking thereon, but not later than 36 hours after placement, the surface of the pavement shall be tested by the Contractor with a 3.7 m straightedge or other approved device, operated in such manner as to reveal all surface irregularities exceeding the tolerances specified in Table 1 above, except that deviations

from the approved straightedge greater than specified tolerances caused by edge slump along slip formed longitudinal construction joints shall not be considered in smoothness determinations in the transverse direction. Deviations greater than specified tolerances caused by high areas along slipformed longitudinal construction joints shall be considered in smoothness determination in the transverse direction. The entire area of the pavement shall be tested in both a longitudinal and transverse direction on parallel lines ten feet or less apart. The straightedge shall be held in contact with the surface and moved ahead one-half the length of the straightedge for each successive measurement. Straightedge lines shall be carried continuously across joints. Other devices that reveal surface irregularities exceeding specified tolerances may be used when approved. Straightedge testing for acceptance or rejection of the finished pavement surface will be performed by the Contracting Officer as soon as possible and not later than 48 hours after the end of the curing period, except that straightedge testing across longitudinal construction joints will be accomplished with 48 hours after the end of the curing period of the concrete placed in the adjacent lane.

3.11.4 Deficiencies and Corrections

High areas shall be reduced either by rubbing the freshly finished concrete with carborundum brick and water when the concrete is less than 36 hours old or by grinding the hardened concrete with an approved surface grinding machine when the concrete is older than 36 hours. The area corrected by grinding the hardened surface shall not exceed 5 percent of the area of any integral slab and the depth of grinding shall not exceed 63 mm. All pavement areas requiring plan grade, surface smoothness or edge slump corrections in excess of the limits specified above, shall be removed and replaced in conformance with Paragraph: REMOVAL AND REPLACEMENT OF DEFECTIVE PAVEMENT AREAS. Areas exceeding 2.3 square meter that have been corrected by rubbing or grinding will be retextured by transverse grooving. The groves shall be 3.2 to 6.4 mm on 50.8 mm centers and shall be carried into, and tapered to zero depth within the non-corrected surface. All areas in which rubbing or grinding has been performed will be subject to the thickness tolerances specified in Paragraph: TOLERANCE IN PAVEMENT THICKNESS.

3.12 TOLERANCES IN PAVEMENT THICKNESS

Pavements shall be of the thicknesses indicated on the plans. Deficiencies in the thickness shall be treated as described below. Testing shall be the responsibility of the Contractor and shall be performed by an approved commercial testing laboratory at no additional cost to the Government.

3.12.1 Thickness Determination

The thickness of the pavement shall be determined on the basis of measurements made on cores drilled from points in the pavement, within seven days after placement of the concrete. Cores generally shall be taken from every other lane of the paved area or as directed by the Contracting Officer. Measurement of individual cores shall be performed in accordance with ASTM C 174. The core holes shall be refilled by the Contractor with portland cement concrete bonded to the pavement with epoxy-resin grout.

3.12.2 Permissible Deficiency

Permissible deficiency in pavement thickness will be up to but not including 6.4 mm of the specified thickness.

3.12.2.1 Pavement Deficient in Thickness

When measurement of any core indicates that the pavement is deficient in thickness 6.4 mm or more, additional cores shall be drilled at 7.6 meters intervals along the center line of the lane on each side of the deficient core, until the cores indicate that the deficiency in thickness is less than 6.4 mm. Pavement areas deficient in slab thickness 6.4 mm or more shall be removed or replaced with pavement of the indicated thickness in conformance with Paragraph: REMOVAL AND REPLACEMENT OF DEFECTIVE PAVEMENT AREAS. Partial slabs to be removed and replaced shall extend across the full paving lane width midway between adjacent cores or to the regularly scheduled transverse joint should such a joint fall between the cores. If the Contractor believes that the cores and measurement taken are not sufficient to indicate fairly the actual thickness of the pavement, additional cores and measurements will be taken provided the Contractor will bear the extra cost of drilling the cores and filling the holes in the pavement as directed. When surface grinding and texture restoration is required that results in thickness deficiencies which exceed the permissible deviations, the concrete removal and replacement requirements will apply as contained in Paragraph: REMOVAL AND REPLACEMENT OF DEFECTIVE PAVEMENT AREAS.

3.13 REPAIRS OF DEFECTIVE PAVEMENT SLABS

Broken slabs, random cracks, nonworking contraction joints near cracks, and spalls along joints and cracks shall be replaced or repaired as specified below. The Contracting Officer will be responsible for determining, by means of a structural evaluation, whether defective pavement shall be repaired as specified below or replaced as specified in Paragraph: REMOVAL AND REPLACEMENT OF DEFECTIVE PAVEMENT AREAS.

3.13.1 Spalls

Spalls along joints or at other locations shall be repaired as specified in TM 5-822-9 at no additional cost to the Government.

3.13.2 Broken Slabs

Broken slabs and random cracks shall be repaired by pressure epoxy-grout injection as specified hereinafter at no additional cost to the Government. Epoxy injection repairs shall be in locations as directed by the Contracting Officer.

3.13.2.1 Materials

Epoxy-resin based binder shall be two-component material formulated to meet the requirements of ASTM C 881, Type I, Grade I, Class determined by ambient temperature. Epoxy grout mixture shall be in accordance with manufacturer's recommendations for each particular area to be repaired.

3.13.2.2 Epoxy Injection

3.13.2.2.1 Preparation of Crack Area

Remove all surface contamination by wire brushing, scraping or light sandblasting and remove dust in crack with light air jet. After approval of the preparation operation, the Contractor shall apply a seal to the surface of the crack, leaving ports for injection of epoxy material in

accordance with the manufacturer's recommendations. After epoxy injection, the Contractor shall deepen the adjacent sawed joint to at least 1/3 the pavement thickness.

3.14 Epoxy Injection Placement

The Contractor shall perform the necessary drilling and grouting at all random cracks which develop. The epoxy material shall be proportioned and injected as recommended by the manufacturer of the material for the intended use. The concrete cracks shall be mapped and the injection shall be on center-to-center spacing necessary to perform structural bonding to the full depth of the crack. Epoxy injection of cracks shall not be started until the concrete has cured for a minimum of 7 days and the injection shall be completed within 14 days after placement.

3.15 REMOVAL AND REPLACEMENT OF DEFECTIVE PAVEMENT AREAS

Defective pavement shall be removed and replaced as specified herein with pavements of the thickness and quality required by these specifications. In no case shall concrete removal and replacement result in a slab less than the full paving lane width or a joint less than 3 meters from a regularly scheduled transverse joint. When a portion of the unfractured slab is replaced, a saw cut three inches deep shall be made transversely across the slab in the required location, and the concrete shall be removed to provide an essentially vertical face in the remaining portion of the slab. Just prior to placement of concrete, the slab face shall be cleaned of debris and loose concrete, dust removed with light air jet, and then thoroughly coated with a thixotropic epoxy-resin adhesive manufactured specifically for bonding fresh portland cement concrete to existing hardened concrete. Longitudinal construction joints and transverse contraction joints shall not be coated with epoxy-resin adhesive. Asphaltic emulsion or other approved bond-breaking medium shall be pointed on vertical construction and contraction joint faces. Longitudinal and transverse joints of the replaced slab or portion thereof shall be constructed as indicated. The joints shall be sealed as specified in SECTION: JOINT SEALING IN CONCRETE PAVEMENTS. The replaced pavement will be paid for at the contract price but no payment will be made for the defective pavements removed nor for the cost of removing the defective pavements.

3.16 JOINTS

3.16.1 Longitudinal Construction Joints

Longitudinal construction joints between paving lanes shall be located as indicated. When the concrete is placed using stationary forms, metal forms securely fastened to the concrete form shall be used to form the keyway in the plastic concrete. Longitudinal construction joints shall be edged and subsequently sawed to provide a groove at the top conforming to the details and dimensions indicated.

3.16.2 Transverse Construction Joints

Transverse construction joints shall be installed at the end of each day's placing operations and at any other points within a paving lane when concrete placement is interrupted for 30 minutes or longer. Transverse construction joints shall be installed in the location of a planned joint. When concrete placement cannot be continued, the transverse construction joint shall be saw cut full depth and removed back to the nearest

transverse joint. Transverse construction joints shall be doweled as shown. When the construction joint is located at planned transverse joints, one half of each dowel shall be painted and oiled to permit movement at the joint. These joints shall be edged and subsequently sawed to provide a groove at the top conforming to the details and dimensions indicated.

3.16.3 Expansion Joints

Expansion joints shall be formed by means of a preformed filler material. The filler shall be securely held in position by means of approved metal supports which shall remain in the pavement. A removable metal channel cap bar shall be used to hold the parts of the joint in proper position and protect the filler from damage during concreting operations. The cap bar shall be removable without damage to the pavement to provide a space for sealing of the joint. Expansion joints shall be formed about structures and features that project through, into, or against the pavement, using joint filler of the type, thickness, and width indicated, and installed in such manner as to form a complete, uniform separation between the structure and pavement.

3.16.4 Contraction Joints

Transverse and longitudinal contraction joints shall be sawed and constructed as indicated. Longitudinal contraction joints shall be constructed by sawing a groove in the hardened concrete with a power-driven saw in conformance with subparagraph "3.12.4.1 Sawed Joints" below, unless otherwise approved. Transverse contraction joints shall be constructed in conformance with subparagraphs "3.12.4.1 Sawed Joints" below, unless otherwise approved.

3.16.4.1 Sawed Joints

Sawed joints shall be constructed by sawing a groove in the concrete with a 3.2 mm blade to the full depth as indicated. After expiration of the curing period, the upper portion of the groove shall be widened by sawing to the width and depth indicated. The time of sawing shall vary depending on existing and anticipated weather conditions, and shall be such as to prevent uncontrolled cracking of the pavement. Sawing of the joints shall commence as soon as the concrete has hardened sufficiently to permit cutting the concrete without chipping, spalling, or tearing. The sawed faces of joints will be inspected for undercutting or washing of the concrete due to the early sawing, and sawing shall be delayed if undercutting is sufficiently deep to cause structural weakness or excessive toughness in the joint. The sawing operation shall be carried on as required during both day and night regardless of weather conditions. The joints shall be sawed at the required spacing consecutively in the sequence of the concrete placement. The saw cut shall not vary more than 12.7 mm from the true joint alinement. Before sawing a joint, the concrete shall be examined closely for cracks, and the joint shall not be sawed if a crack has occurred near the joint location. Sawing shall be discontinued when a crack develops ahead of the saw cut. Immediately after joint is sawed, the saw cut and adjacent concrete surface shall be thoroughly flushed with water until all waste from sawing is removed from the joint. Any membrane-cured surface damaged during the sawing operations shall be resprayed as soon as the surface becomes dry. An ample supply of saw blades shall be available on the job before concrete placement is started, and at least one standby sawing unit in good working order shall be available at the jobsite at all times during the sawing operation.

3.16.5 Dowels

3.16.5.1 Fixed Form Installation

Fixed form installation of dowels shall be prepared and placed across joints where indicated, corrected aligned and securely held in the proper horizontal and vertical position during placing and finishing operations. Installation by removing and replacing dowels in preformed holes will not be permitted. Dowels in longitudinal and transverse construction joints shall be held securely in place parallel to the surface as indicated , by means of devices fastened to the form. Dowels in longitudinal joints shall be omitted when the center of the dowel would be located within a horizontal distance from a transverse joint equal to 1/4 of slab thickness. Dowels shall be installed within 3.2 mm per meter of length of correct alignment. The Contractor shall furnish as approved template for checking the position of the dowels. The portion of each dowel intended to move within the concrete or expansion cap shall be painted with one coat of red-lead or blue-lead paint. The painted portion shall be wiped clean and coated with a film of lubricating oil before concrete is placed.

3.16.6 Sealed Joints

Joints shall be sealed immediately following curing of the concrete or as soon thereafter as weather conditions permit, as directed. Joints shall be sealed as specified in SECTION: JOINT SEALING IN CONCRETE PAVEMENTS.

3.17 PAVEMENT PROTECTION

The Contractor shall protect the pavement against all damage prior to final acceptance of the work by the Government. Traffic shall be excluded from the pavement until the concrete is at least 14 days old, or for a longer period if so directed. As a construction expedient in paving intermediate lanes between newly paved lanes, operation of the paver and batch-hauling equipment will be permitted on the pavement after the pavement has been cured for seven days and the joints have been sealed or otherwise protected. Also, the subgrade planer, a concrete finishing machine, and similar equipment may be permitted to ride upon the edges of previously constructed slabs when the concrete has attained a minimum flexural strength of 2.8 Mpa, and provided further that adequate means are furnished to prevent damage to the slab edge.

3.18 CONTRACTOR QUALITY CONTROL

3.18.1 General

The Contractor shall perform the inspection and tests described above and in Paragraph: INSPECTION DETAILS AND FREQUENCY OF TESTING. All testing shall be accomplished by use of the Contractor's own laboratory or by using the services of a commercial laboratory approved by the Contracting Officer. The Government reserves the right to check laboratory equipment employed for compliance with the test standards, and the right to sample and test materials at any time.

3.18.2 Inspection Details and Frequency of Testing

3.18.2.1 Fine Aggregate

3.18.2.1.1 Grading

During each shift when the concrete plant is operating there shall be one sieve analysis in accordance with ASTM C 117 and ASTM C 136 for the fine aggregate.

3.19 Moisture Content

Two tests for moisture content in accordance with ASTM C 70 and ASTM C 566 will be made during each shift of mixing plant operation. An additional test shall be made whenever the slump is shown to be out of control or excessive variation in workability is reported by the placing foreman.

3.20 Coarse Aggregate

During each shift in which concrete plant is operating there shall be a sieve analysis in accordance with ASTM C 117 and ASTM C 136 for each size of coarse aggregate. Samples shall be taken from the batch plant bins.

3.21 Deleterious Materials

Petrographic examination and tests for deleterious materials shall be performed according to the standards and limits stated in paragraph 2.1.2 Deleterious Substances. The frequency of testing shall be:

1) Prior to concrete placement
2) At the midpoint of concrete placement
3) Near the conclusion of concrete placement, and
4) Anytime there is a change in the source of aggregate or the quality of aggregate as determined by the Contracting Officer.

3.22 Scales

The accuracy of the scales shall be checked by test weights as directed by the Contracting Officer, for conformance with the applicable requirements of NBS NIST HB 44. Once a week the accuracy of each batching device shall be checked during a weighing operation by noting and recording the required weight, and the actual weight batched.

3.23 Batch-Plant Control

When the concrete plant is operating, the measurement of all constituent materials including cement, each size of aggregate, water and admixtures shall be continuously monitored. The aggregate weights and amount of water subtracted to compensate for free moisture in the aggregates shall be adjusted as necessary. The amount of air-entraining agent shall be adjusted to control air content within specified limits. A report shall be prepared indicating type and source of cement used, amount and source of admixtures used, aggregate source, the required aggregate and water weights per cubic meter, amount of water as free moisture in each size of aggregate and the batched aggregate and water weights per cubic yard for each class of concrete batched during plant operation.

3.24 Concrete

3.24.1 Air Content Tests

Three tests for air content shall be made on randomly selected batches of concrete during each shift of concrete production. Additional tests shall be made when excessive variation in workability is reported by the placing foreman or Government inspector. Tests shall be made in accordance with ASTM C 231.

3.24.2 Slump Tests

A minimum of three slump tests shall be made on randomly selected batches of each class of concrete during each 8 hour period of concrete production in accordance with ASTM C 143. Additional tests shall be made when excessive variations in workability is reported by the placing foreman or Government inspector.

3.24.3 Test Cylinders

A minimum of one set of four cylinders shall be made for each 250 cubic meters placed or one per every 8-hour shift, whichever is greater. However, at the start of paving operations and when the aggregate source, aggregate characteristics, or mix proportioning is changed, additional sets may be required until the Contracting Officer is satisfied that the concrete mixture being used complies with the strength requirements of these specifications. Test cylinders shall be tested in pairs at 7 days and 28 days of age. One slump and air content test of those herein before specified shall be taken with each set of cylinders. Concrete samples shall be secured in conformance with ASTM C 31, expect that the use of cardboard molds will not be permitted.

3.25 Curing

No curing compound shall be applied until the Contractor has verified that the compound is properly mixed and ready for spraying. At the end of each shift the Contractor shall determine the quantity of compound used and the area of concrete surface covered and compute the rate of coverage in meter per liter, noting whether coverage is uniform.

3.26 Reports

All results of tests conducted at the project site shall be reported in accordance with SECTION: CONSTRUCTION QUALITY CONTROL.

3.27 CONSTRUCTION QUALITY CONTROL

Attention is directed to SECTION: CONSTRUCTION QUALITY CONTROL which requires the Contractor to perform quality control inspection, testing, and reporting.

-- End of Section --

SECTION TABLE OF CONTENTS

DIVISION 02 - SITE WORK

SECTION 02660

WATER DISTRIBUTION SYSTEM

PART 1 GENERAL

1.1 REFERENCES
1.2 PIPING
1.2.1 Service Lines
1.2.2 Plastic Pipe
1.2.3 Excavation, Trenching, and Backfilling
1.3 SUBMITTALS
1.4 HANDLING
1.4.1 Polyethylene (PE) Pipe
1.4.2 Miscellaneous Plastic Pipe and Fittings

PART 2 PRODUCTS

2.1 PIPE
2.1.1 Plastic Pipe
2.1.1.1 Polyethylene Plastic (PE)
2.1.1.2 Polyvinyl Chloride (PVC) Plastic Pipe
2.1.2 Copper Tubing
2.2 FITTINGS AND SPECIALS
2.2.1 Polyvinyl Chloride (PVC) Pipe
2.2.2 Copper Tubing
2.3 JOINTS
2.3.1 Plastic Pipe
2.3.1.1 Polyethylene (PE) Pipe
2.3.1.2 Polyvinyl Chloride Pipe
2.3.2 Isolation Joints
2.3.3 Copper Tubing
2.4 VALVES
2.4.1 Check Valves
2.4.2 Gate Valves
2.5 VALVE BOXES
2.6 FIRE HYDRANTS
2.7 MISCELLANEOUS ITEMS
2.7.1 Service Clamps
2.7.2 Corporation Stops
2.7.3 Goosenecks
2.7.4 Service Stops
2.7.5 Tapping Sleeves
2.7.6 Disinfection
2.7.7 Meters
2.7.7.1 Displacement Type

PART 3 EXECUTION

3.1 INSTALLATION

3.1.1 Cutting of Pipe
3.1.2 Adjacent Facilities
3.1.2.1 Sewer Lines
3.1.2.2 Water Lines
3.1.2.3 Copper Tubing
3.1.2.4 Nonferrous Metallic Pipe
3.1.3 Joint Deflection
3.1.3.1 Flexible Plastic Pipe
3.1.4 Placing and Laying
3.1.4.1 Plastic Pipe Installation
3.1.4.2 Connections
3.1.4.3 Penetrations
3.1.4.4 Flanged Pipe
3.1.5 Jointing
3.1.5.1 Polyethylene (PE) Pipe
3.1.5.2 Polyvinyl Chloride (PVC) Plastic Pipe
3.1.5.3 Copper Tubing
3.1.5.4 Isolation Joints and Dielectric Fittings
3.1.5.5 Connections
3.1.6 Service Lines
3.1.6.1 Service Lines 50 mm (2 Inches) and Smaller
3.1.6.2 Service Lines 50 mm (2 Inches) in Size
3.1.7 Setting of Fire Hydrants, Meters, Valves and Valve Boxes
3.1.7.1 Fire Hydrants
3.1.7.2 Valves
3.1.8 Thrust Restraint
3.1.8.1 Thrust Blocks
3.2 HYDROSTATIC TESTS
3.2.1 Pressure Test
3.2.2 Leakage Test
3.2.3 Time for Making Test
3.2.4 Concurrent Hydrostatic Tests
3.3 DISINFECTION
3.3.1 Bacteriological Disinfection
3.3.2 Lead Residual
3.4 CLEANUP

-- End of Section Table of Contents --

SECTION 02660

WATER DISTRIBUTION SYSTEM

PART 1 GENERAL

1.1 REFERENCES

The publications listed below form a part of this specification to the extent referenced. The publications are referred to in the text by basic designation only.

AMERICAN SOCIETY FOR TESTING AND MATERIALS (ASTM)

ASTM B 88	(1993a) Seamless Copper Water Tube
ASTM D 1784	(1992) Rigid Poly(Vinyl Chloride) (PVC) Compounds and Chlorinated Poly(Vinyl Chloride) (CPVC) Compounds
ASTM D 1785	(1993) Poly(Vinyl Chloride) (PVC) Plastic Pipe, Schedules 40, 80, and 120
ASTM D 2241	(1993) Poly(Vinyl Chloride) (PVC) Pressure-Rated Pipe (SDR Series)
ASTM D 2464	(1993) Threaded Poly(Vinyl Chloride) (PVC) Plastic Pipe Fittings, Schedule 80
ASTM D 2466	(1993) Poly(Vinyl Chloride) (PVC) Plastic Pipe Fittings, Schedule 40
ASTM D 2467	(1993) Socket-Type Poly(Vinyl Chloride) (PVC) Plastic Pipe Fittings, Schedule 80
ASTM D 2564	(1993) Solvent Cements for Poly(Vinyl Chloride) (PVC) Plastic Piping Systems
ASTM D 2657	(1990) Heat-Joining Polyolefin Pipe and Fittings
ASTM D 2774	(1972; R 1983) Underground Installation of Thermoplastic Pressure Piping
ASTM D 2855	(1993) Making Solvent-Cemented Joints with Poly(Vinyl Chloride) (PVC) Pipe and Fittings
ASTM F 477	(1993) Elastomeric Seals (Gaskets) for Joining Plastic Pipe

AMERICAN SOCIETY OF MECHANICAL ENGINEERS (ASME)

ASME B1.20.1	(1983; R 1992) Pipe Threads, General Purpose (Inch)

ASME B16.1	(1989) Cast Iron Pipe Flanges and Flanged Fittings
ASME B16.26	(1988) Cast Copper Alloy Fittings for Flared Copper Tubes

AMERICAN WATER WORKS ASSOCIATION (AWWA)

AWWA B300	(1992) Hypochlorites
AWWA B301	(1992) Liquid Chlorine
AWWA C104	(1990) Cement-Mortar Lining for Ductile-Iron Pipe and Fittings for Water
AWWA C110	(1993) Ductile-Iron and Gray-Iron Fittings, 3 In. Through 48 In. (75 mm through 1200 mm), for Water and Other Liquids
AWWA C111	(1990) Rubber-Gasket Joints for Ductile-Iron Pressure Pipe and Fittings
AWWA C153	(1994) Ductile-Iron Compact Fittings, 3 In. Through 16 In., for Water and Other Liquids
AWWA C500	(1993) Gate Valves for Water and Sewerage Systems
AWWA C502	(1985) Dry-Barrel Fire Hydrants
AWWA C651	(1992) Disinfecting Water Mains
AWWA C700	(1990; C700a) Cold-Water Meters - Displacement Type, Bronze Main Case
AWWA C706	(1991; C706a) Direct-Reading Remote-Registration Systems for Cold-Water Meters
AWWA C800	(1989) Underground Service Line Valves and Fittings
AWWA C900	(1989; C900a) Polyvinyl Chloride (PVC) Pressure Pipe, 4 In. Through 12 In., for Water Distribution
AWWA C901	(1988; Errata Apr 1988) Polyethylene (PE) Pressure Pipe and Tubing, 1/2 In. Through 3 In., for Water Service
AWWA M23	(1980) Manual: PVC Pipe - Design and Installation

ASBESTOS CEMENT PIPE PRODUCERS ASSOCIATION (ACPPA)

ACPPA-01	(1988) Recommended Work Practices for A/C

Pipe

MANUFACTURERS STANDARDIZATION SOCIETY OF THE VALVE AND FITTINGS INDUSTRY (MSS)

MSS SP-80	(1987) Bronze Gate, Globe, Angle and Check Valves

NATIONAL FIRE PROTECTION ASSOCIATION (NFPA)

NFPA 49	(1991) Hazardous Chemicals Data
NFPA 325M	(1991) Fire Hazard Properties of Flammable Liquids, Gases, and Volatile Solids
NFPA 704	(1990) Identification of the Fire Hazards of Materials

NSF INTERNATIONAL (NSF)

NSF Std 14	(1965; Rev Nov 1990) Plastics Piping System Components and Related Materials

STEEL STRUCTURES PAINTING COUNCIL (SSPC)

SSPC Paint 21	(1991) White or Colored Silicone Alkyd Paint
SSPC Paint 25	(1991) Red Iron Oxide, Zinc Oxide, Raw Linseed Oil and Alkyd Primer (without Lead and Chromate Pigments)

1.2 PIPING

This section covers water service lines and connections to building service at a point approximately 1.5 m outside buildings and structures to which service is required. The Contractor shall have a copy of the manufacturer's recommendations for each material or procedure to be utilized available at the construction site at all times.

1.2.1 Service Lines

Piping for water service lines less than 80 mm (3 inches) in diameter shall be polyvinyl chloride (PVC) plastic, polyethylene, or copper tubing, unless otherwise shown or specified. Piping for water service lines for sizes 80 mm (3 inches) and larger shall be polyvinyl chloride (PVC) plastic through 300 mm (12 inch) .

1.2.2 Plastic Pipe

All plastic piping system components (PVC, polyethylene) intended for transportation of potable water shall comply with NSF Std 14 and shall be legibly marked with their symbol.

1.2.3 Excavation, Trenching, and Backfilling

Excavation, trenching, and backfilling shall be in accordance with the applicable provisions of Section 02222 EXCAVATION, TRENCHING, AND BACKFILLING FOR UTILITIES SYSTEMS, except as modified herein.

1.3 SUBMITTALS

Government approval is required for submittals with a "GA" designation; submittals having an "FIO" designation are for information only. The following shall be submitted in accordance with Section 01330 SUBMITTAL PROCEDURES:

SD-06 Instructions

Installation; FIO.

The manufacturer's recommendations for each material or procedure to be utilized.

Satisfactory Installation; FIO.

A statement signed by the principal officer of the contracting firm stating that the installation is satisfactory and in accordance with the contract drawings and specifications and the manufacturer's prescribed procedures and techniques, upon completion of the project and before final acceptance.

SD-09 Reports

Bacteriological Disinfection; FIO.

Test results from commercial laboratory verifying disinfection.

Meters; FIO.

Manufacturer's certificate stating that each meter furnished has been tested for accuracy of registration and compliance with the accuracy and capacity requirements of the appropriate AWWA standard.

1.4 HANDLING

Pipe and accessories shall be handled so as to ensure delivery to the trench in sound, undamaged condition. Particular care shall be taken not to injure the pipe coating or lining. If the coating or lining of any pipe or fitting is damaged, the repair shall be made by the Contractor at his expense in a satisfactory manner. No other pipe or material of any kind shall be placed inside a pipe or fitting after the coating has been applied. Pipe shall be carried into position and not dragged. Use of pinch bars and tongs for aligning or turning pipe will be permitted only on the bare ends of the pipe. The interior of pipe and accessories shall be thoroughly cleaned of foreign matter before being lowered into the trench and shall be kept clean during laying operations by plugging or other approved method. Before installation, the pipe shall be inspected for defects. Material found to be defective before or after laying shall be replaced with sound material without additional expense to the Government. Rubber gaskets that are not to be installed immediately shall be stored in a cool and dark place.

1.4.1 Polyethylene (PE) Pipe

PE pipe, fittings, and accessories shall be handled in conformance with AWWA C901.

1.4.2 Miscellaneous Plastic Pipe and Fittings

Polyvinyl Chloride (PVC) shall be handled and stored in accordance with the manufacturer's recommendations. Storage facilities shall be classified and marked in accordance with NFPA 704, with classification as indicated in NFPA 49 and NFPA 325M.

PART 2 PRODUCTS

2.1 PIPE

Pipe shall conform to the respective specifications and other requirements specified below.

2.1.1 Plastic Pipe

2.1.1.1 Polyethylene Plastic (PE)

Pipe, tubing, and heat-fusion fittings shall conform to AWWA C901.

2.1.1.2 Polyvinyl Chloride (PVC) Plastic Pipe

Pipe, couplings and fittings shall be manufactured of material conforming to ASTM D 1784, Class 12454B.

a. Pipe Less Than 100 mm (4 inch) Diameter:

(1) Screw-Joint: Pipe shall conform to dimensional requirements of ASTM D 1785 Schedule 80, with joints meeting requirements of 1.03 MPa (150 psi) working pressure, 1.38 MPa (200 psi) hydrostatic test pressure, unless otherwise shown or specified. Pipe couplings when used, shall be tested as required by ASTM D 2464.

(2) Elastomeric-Gasket Joint: Pipe shall conform to dimensional requirements of ASTM D 1785. Schedule 40 with joints meeting the requirements of 1.03 MPa (150 psi) working pressure, 1.38 MPa (200 psi) hydrostatic test pressure, unless otherwise shown or specified, or it may be pipe conforming to requirements of ASTM D 2241, elastomeric joint, with the following applications:

SDR	Maximum Working Pressure MPa	Minimum Hydrostatic Pressure MPa
26	0.689	0.917
21	0.827	1.103
17	1.034	1.379
13.5	1.379	1.834

(3) Solvent Cement Joint: Pipe shall conform to dimensional

requirements of ASTM D 1785 or ASTM D 2241 with joints meeting the requirements of 1.03 MPa (150 psi) working pressure and 1.38 MPa (200 psi) hydrostatic test pressure.

b. Pipe 100 mm (4 inch) through 300 mm (12 Inch) Diameter: Pipe, couplings and fittings shall conform to AWWA C900, Class 150, CIOD pipe dimensions, elastomeric-gasket joint, unless otherwise shown or specified.

2.1.2 Copper Tubing

Copper tubing shall conform to ASTM B 88, Type K, annealed.

2.2 FITTINGS AND SPECIALS

2.2.1 Polyvinyl Chloride (PVC) Pipe

a. For pipe less than 100 mm (4 inch) diameter, fittings for threaded pipe shall conform to requirements of ASTM D 2464, threaded to conform to the requirements of ASME B1.20.1 for use with Schedule 80 pipe and fittings, fittings for solvent cement jointing shall conform to ASTM D 2466 or ASTM D 2467, and fittings for elastomeric-gasket joint pipe shall be iron conforming to AWWA C110 or AWWA C111. Iron fittings and specials shall be cement-mortar lined (standard thickness) in accordance with AWWA C104.

b. For pipe 100 mm (4 inch) diameter and larger, fittings and specials shall be iron, bell end in accordance with AWWA C110, 1.03 MPa (150 psi) pressure rating unless otherwise shown or specified, except that profile of bell may have special dimensions as required by the pipe manufacturer; or may be fittings and specials of the same material as the pipe with elastomeric gaskets, all in conformance with AWWA C900. Iron fittings and specials shall be cement-mortar lined (standard thickness) in accordance with AWWA C104. Fittings shall be bell and spigot or plain end pipe, or as applicable. Ductile iron compact fittings shall be in accordance with AWWA C153.

2.2.2 Copper Tubing

Fittings and specials shall be flared and conform to ASME B16.26.

2.3 JOINTS

2.3.1 Plastic Pipe

2.3.1.1 Polyethylene (PE) Pipe

Joints for pipe fittings and couplings shall be strong tight joints as specified for PE in Paragraph INSTALLATION. Joints connecting pipe of differing materials shall be made in accordance with the manufacturer's recommendation as approved by the Contracting Officer.

2.3.1.2 Polyvinyl Chloride Pipe

Joints, fittings, and couplings shall be as specified for PVC pipe. Joints

connecting pipe of differing materials shall be made in accordance with the manufacturer's recommendations as approved by the Contracting Officer.

2.3.2 Isolation Joints

Isolation joints shall be installed between nonthreaded ferrous and nonferrous metallic pipe, fittings and valves. Isolation joints shall consist of a sandwich-type flange isolation gasket of the dielectric type, isolation washers, and isolation sleeves for flange bolts. Isolation gaskets shall be full faced with outside diameter equal to the flange outside diameter. Bolt isolation sleeves shall be full length. Units shall be of a shape to prevent metal-to-metal contact of dissimilar metallic piping elements.

a. Sleeve-type couplings shall be used for joining plain end pipe sections. The two couplings shall consist of one steel middle ring, two steel followers, two gaskets, and the necessary steel bolts and nuts to compress the gaskets.

b. Split-sleeve type couplings may be used in aboveground installations when approved in special situations and shall consist of gaskets and a housing in two or more sections with the necessary bolts and nuts.

2.3.3 Copper Tubing

Joints shall be compression-pattern flared and shall be made with fittings hereinafter specified.

2.4 VALVES

2.4.1 Check Valves

Check valves shall be designed for a minimum working pressure of 1.03 MPa (150 psi) or as indicated. Valves shall have a clear waterway equal to the full nominal diameter of the valve. Valves shall open to permit flow when inlet pressure is greater than the discharge pressure, and shall close tightly to prevent return flow when discharge pressure exceeds inlet pressure. The size of the valve, working pressure, manufacturer's name, initials, or trademark shall be cast on the body of each valve. Valves 50 mm (2 inches) and larger shall be outside lever and spring or outside lever and weighttype.

b. Valves larger than 50 mm (2 inches) shall be iron body, bronze mounted, shall have flanged ends, and shall be the non-slam type. Flanges shall be the Class 125 type conforming to ASME B16.1.

2.4.2 Gate Valves

Gate valves shall be designed for a working pressure of not less than 1.03 MPa (150 psi). Valve connections shall be as required for the piping in which they are installed. Valves shall have a clear waterway equal to the full nominal diameter of the valve, and shall be opened by turning counterclockwise. The operating nut or wheel shall have an arrow, cast in the metal, indicating the direction of opening.

a. Valves smaller than 80 mm (3 inches) shall be all bronze and

shall conform to MSS SP-80, Type 1, Class 150.

b. Valves 80 mm (3 inches) and larger shall be iron body, bronze mounted, and shall conform to AWWA C500. Flanges shall not be buried. An approved pit shall be provided for all flanged connections.

2.5 VALVE BOXES

Valve boxes shall be cast iron or concrete, except that concrete boxes may be installed only in locations not subjected to vehicular traffic. Cast-iron boxes shall be extension type with slide-type adjustment and with flared base. The minimum thickness of metal shall be 5 mm. Concrete boxes shall be the standard product of a manufacturer of precast concrete equipment. The word "WATER" shall be cast in the cover. The box length shall adapt, without full extension, to the depth of cover required over the pipe at the valve location.

2.6 FIRE HYDRANTS

Hydrants shall be dry-barrel type conforming to AWWA C502 with valve opening at least 125 mm (5 inches) in diameter and designed so that the flange at the main valve seat can be removed with the main valve seat apparatus remaining intact, closed and reasonably tight against leakage and with a breakable valve rod coupling and breakable flange connections located no more than 200 mm above the ground grade Hydrants shall have a 150 mm (6 inch) bell connection, two 65 mm (2-1/2 inch) hose connections and one 115 mm (4-1/2 inch) pumper connection. Outlets shall have American National Standard fire-hose coupling threads. Working parts shall be bronze. Design, material, and workmanship shall be similar and equal to the latest stock pattern ordinarily produced by the manufacturer. Hydrants shall be painted with one coat of red iron oxide, zinc oxide primer conforming to SSPC Paint 25 and two finish coats of silicone alkyd paint conforming to SSPC Paint 21, of the installation's standard colors or as directed by the Contracting Officer. Suitable bronze adapter for each outlet, with caps, shall be furnished.

2.7 MISCELLANEOUS ITEMS

2.7.1 Service Clamps

Service clamps shall have a pressure rating not less than that of the pipe to be connected and shall be either the single or double flattened strap type. Clamps shall have a galvanized malleable-iron body with cadmium plated straps and nuts. Clamps shall have a rubber gasket cemented to the body.

2.7.2 Corporation Stops

Corporation stops shall have standard corporation stop thread conforming to AWWA C800 on the inlet end, with flanged joints, compression pattern flared tube couplings, or wiped joints for connections to goosenecks.

2.7.3 Goosenecks

Copper tubing for gooseneck connections shall conform to the applicable requirements of ASTM B 88, Type K, annealed. Length of cable requirement

connections shall be in accordance with standard practice.

2.7.4 Service Stops

Service stops shall be water-works inverted-ground-key type, oval or round flow way, tee handle, without drain. Pipe connections shall be suitable for the type of service pipe used. All parts shall be of bronze with female iron-pipe-size connections or compression-pattern flared tube couplings, and shall be designed for a hydrostatic test pressure not less than 1.375 MPa (200 psi).

2.7.5 Tapping Sleeves

Tapping sleeves of the sizes indicated for connection to existing main shall be the cast gray, ductile, or malleable-iron, split-sleeve type with flanged or grooved outlet, and with bolts, follower rings and gaskets on each end of the sleeve. Construction shall be suitable for a maximum working pressure of 1.03 MPa . Bolts shall have square heads and hexagonal nuts. Longitudinal gaskets and mechanical joints with gaskets shall be as recommended by the manufacturer of the sleeve. When using grooved mechanical tee, it shall consist of an upper housing with full locating collar for rigid positioning which engages a machine-cut hole in pipe, encasing an elastomeric gasket which conforms to the pipe outside diameter around the hole and a lower housing with positioning lugs, secured together during assembly by nuts and bolts as specified, pretorqued to 67.8 Newton meters (50 foot-pound).

2.7.6 Disinfection

Chlorinating materials shall conform to the following:

Chlorine, Liquid: AWWA B301.

Hypochlorite, Calcium and Sodium: AWWA B300.

2.7.7 Meters

Meters shall be the type and size shown on the drawings or specified herein. Meters of each of the various types furnished and installed under this contract shall be supplied by one manufacturer.

2.7.7.1 Displacement Type

Displacement type meters shall conform to AWWA C700. Registers shall be straight-reading and shall read in U.S. gallons. Meters in sizes 13 mm through 25 mm shall be frost-protection design. Connections shall be suitable to the type of pipe and conditions encountered. Register type shall be a direct-reading remote register designed in accordance with AWWA C706. Meters shall comply with the accuracy and capacity requirements of AWWA C700.

PART 3 EXECUTION

3.1 INSTALLATION

3.1.1 Cutting of Pipe

Cutting of pipe shall be done in a neat and workmanlike manner without damage to the pipe. Unless otherwise recommended by the manufacturer and

authorized by the Contracting Officer, cutting shall be done with an approved type mechanical cutter. Wheel cutter shall be used when practicable. Copper tubing shall be cut square and all burrs shall be removed.

3.1.2 Adjacent Facilities

3.1.2.1 Sewer Lines

Where the location of the water pipe is not clearly defined in dimensions on the drawings, the water pipe shall not be laid closer horizontally than 3 m from a sewer except where the bottom of the water pipe will be at least 300 mm above the top of the sewer pipe, in which case the water pipe shall not be laid closer horizontally than 1.8 m from the sewer. Where water lines cross under gravity-flow sewer lines, the sewer pipe for a distance of at least 3 m each side of the crossing shall be fully encased in concrete or shall be made of pressure pipe with no joint located within 900 mm horizontally of the crossing. Water lines shall in all cases cross above sewage force mains or inverted siphons and shall be not less than 600 mm above the sewer main. Joints in the sewer main, closer horizontally than 900 mm to the crossing, shall be encased in concrete.

3.1.2.2 Water Lines

Water lines shall not be laid in the same trench with sewer lines, gas lines, fuel lines, or electric wiring.

3.1.2.3 Copper Tubing

Copper tubing shall not be installed in the same trench with ferrous piping materials.

3.1.2.4 Nonferrous Metallic Pipe

Where nonferrous metallic pipe, e.g. copper tubing, crosses any ferrous piping material, a minimum vertical separation of 300 mm shall be maintained between pipes.

3.1.3 Joint Deflection

3.1.3.1 Flexible Plastic Pipe

Maximum offset in alignment between adjacent pipe joints shall be as recommended by the manufacturer and approved by the Contracting Officer, but in no case shall it exceed 5 degrees.

3.1.4 Placing and Laying

Pipe and accessories shall be carefully lowered into the trench by means of derrick, ropes, belt slings, or other authorized equipment. Under no circumstances shall any of the water-line materials be dropped or dumped into the trench. Care shall be taken to avoid abrasion of the pipe coating. Except where necessary in making connections with other lines or as authorized by the Contracting Officer, pipe shall be laid with the bells facing in the direction of laying. The full length of each section of pipe shall rest solidly upon the pipe bed, with recesses excavated to accommodate bells, couplings, and joints. Pipe that has the grade or joint disturbed after laying shall be taken up and relaid. Pipe shall not be laid in water or when trench conditions are unsuitable for the work. Water

shall be kept out of the trench until joints are complete. When work is not in progress, open ends of pipe, fittings, and valves shall be securely closed so that no trench water, earth, or other substance will enter the pipes or fittings. Where any part of the coating or lining is damaged, the repair shall be made by the Contractor at his expense in a satisfactory manner. Pipe ends left for future connections shall be valved, plugged, or capped, and anchored, as shown.

3.1.4.1 Plastic Pipe Installation

PE Pipe shall be installed in accordance with ASTM D 2774. PVC pipe shall be installed in accordance with AWWA M23.

3.1.4.2 Connections

Where connections are made between new work and existing mains, the connections shall be made by using specials and fittings to suit the actual conditions. When made under pressure, these connections shall be installed using standard methods as approved by the Contracting Officer. Connections to existing asbestos-cement pipe shall be made in accordance with ACPPA-01.

3.1.4.3 Penetrations

Pipe passing through walls of valve pits and structures shall be provided with ductile-iron or Schedule 40 steel wall sleeves. Annular space between walls and sleeves shall be filled with rich cement mortar. Annular space between pipe and sleeves shall be filled with mastic.

3.1.4.4 Flanged Pipe

Flanged pipe shall only be installed above ground or with the flanges in valve pits.

3.1.5 Jointing

3.1.5.1 Polyethylene (PE) Pipe

Jointing shall comply with ASTM D 2657, Technique I-Socket Fusion or Technique II-Butt Fusion.

3.1.5.2 Polyvinyl Chloride (PVC) Plastic Pipe

a. Pipe less than 100 mm (4 inch) diameter: Threaded joints shall be made by wrapping the male threads with approved thread tape or applying an approved lubricant, then threading the joining members together. The joint shall be tightened using strap wrenches to prevent damage to the pipe and/or fitting. To avoid excessive torque, joints shall be tightened no more than one thread past hand-tight. Preformed rubber-ring gaskets for elastomeric-gasket joints shall be made in accordance with requirements of ASTM F 477 and as required herein. All pipe ends for push-on joints shall be beveled to facilitate assembly and marked to indicate when the pipe is fully seated. The gasket shall be prelubricated to prevent displacement. The gasket and ring groove in the bell or coupling shall match. The manufacturer of the pipe or fitting shall supply the elastomeric gasket. Couplings shall be provided with stops or centering rings to assure that the coupling is centered on the joint. Solvent cement joints shall use sockets conforming to the requirements of ASTM D 2467. The solvent cement

used shall meet the requirements of ASTM D 2564; the joint assembly shall be made in accordance with ASTM D 2855 and the manufacturer's specific recommendations.

b. Pipe 100 mm (4 inch) through 300 mm (12 inch) diameter: Joints shall be elastomeric-gasket as specified in AWWA C900. Jointing procedure shall be as specified for pipe less than 100 mm (4 inch) diameter with configuration using elastomeric ring gasket.

3.1.5.3 Copper Tubing

Joints shall be made with flared fittings. The flared end tube shall be pulled tightly against the tapered part of the fitting by a nut which is part of the fitting, so there is metal-to-metal contact.

3.1.5.4 Isolation Joints and Dielectric Fittings

Isolation joints and dielectric fittings shall be installed in accordance with details specified in paragraph JOINTS. Dielectric unions shall be encapsulated in a field-poured coal-tar covering, with at least 3 mm thickness of coal tar over all fitting surfaces.

3.1.5.5 Connections

Connections between different types of pipe and accessories shall be made with transition fittings approved by the Contracting Officer.

3.1.6 Service Lines

Service lines shall include the pipeline connecting building piping to water distribution lines to the connections with the building service at a point approximately 1.5 m outside the building where such building service exists. Where building services are not installed, the Contractor shall terminate the service lines approximately 1.5 m from the site of the proposed building at a point designated by the Contracting Officer. Such service lines shall be closed with plugs or caps. All service stops and valves shall be provided with service boxes. Service lines shall be constructed in accordance with the following requirements:

3.1.6.1 Service Lines 50 mm (2 Inches) and Smaller

Service lines 50 mm (2 inches) and smaller shall be connected to the main by a directly-tapped corporation stop or by a service clamp. A corporation stop and a copper gooseneck shall be provided with either type of connection. Maximum sizes for directly-tapped corporation stops and for outlets with service clamps shall be as in TABLE I. Where 2 or more gooseneck connections to the main are required for an individual service, such connections shall be made with standard branch connections. The total clear area of the branches shall be at least equal to the clear area of the service which they are to supply.

3.1.6.2 Service Lines 50 mm (2 Inches) in Size

Service lines 50 mm (2 inches) in size shall have a gate valve.

3.1.7 Setting of Fire Hydrants, Meters, Valves and Valve Boxes

3.1.7.1 Fire Hydrants

Fire hydrants shall be located and installed as shown. Each hydrant shall be connected to the main with a 150 mm (6 inch) branch line having at least as much cover as the distribution main. Hydrants shall be set plumb with pumper nozzle facing the roadway, with the center of the lowest outlet not less than 450 mm above the finished surrounding grade, and the operating nut not more than 1.2 m above the finished surrounding grade. Fire hydrants designated on the drawings as low profile shall have the lowest outlet not less than 450 mm above the finished surrounding grade, the top of the hydrant not more than 600 mm above the finished surrounding grade. Except where approved otherwise, the backfill around hydrants shall be thoroughly compacted to the finished gradeline immediately after installation to obtain beneficial use of the hydrant as soon as practicable. The hydrant shall be set upon a slab of concrete not less than 100 mm thick and 400 mm square. Not less than 2 cubic meters of free-draining broken stone or gravel shall be placed around and beneath the waste opening of dry barrel hydrants to ensure drainage.

3.1.7.2 Valves

After delivery, valves shall be drained to prevent freezing and shall have the interiors cleaned of all foreign matter before installation. Stuffing boxes shall be tightened and valves shall be fully opened and fully closed to ensure that all parts are in working condition. Valves and valve boxes shall be installed where shown or specified, and shall be set plumb. Valve boxes shall be centered on the valves. Boxes shall be installed over each outside gate valve unless otherwise shown. Where feasible, valves shall be located outside the area of roads and streets. Earth fill shall be carefully tamped around each valve box or pit to a distance of 1.2 m on all sides of the box, or the undisturbed trench face if less than 1.2 m.

3.1.8 Thrust Restraint

Plugs, caps, tees and bends deflecting 11-1/4 degrees or more, either vertically or horizontally, on waterlines 100 mm (4 inches) in diameter or larger, and fire hydrants shall be provided with thrust restraints. Valves shall be securely anchored or shall be provided with thrust restraints to prevent movement. Thrust restraints shall be either thrust blocks or, for ductile-iron pipes, restrained joints.

3.1.8.1 Thrust Blocks

Thrust blocking shall be concrete of a mix not leaner than: 1 cement, 2-1/2 sand, 5 gravel; and having a compressive strength of not less than 14 MPa after 28 days. Blocking shall be placed between solid ground and the hydrant or fitting to be anchored. Unless otherwise indicated or directed, the base and thrust bearing sides of thrust blocks shall be poured directly against undisturbed earth. The sides of thrust blocks not subject to thrust may be poured against forms. The area of bearing shall be as shown or as directed. Blocking shall be placed so that the fitting joints will be accessible for repair. Steel rods and clamps, protected by galvanizing or by coating with bituminous paint, shall be used to anchor vertical down bends into gravity thrust blocks.

3.2 HYDROSTATIC TESTS

3.2.1 Pressure Test

After the pipe is laid, the joints completed, fire hydrants permanently installed, and the trench partially backfilled leaving the joints exposed for examination, the newly laid piping or any valved section of piping shall, unless otherwise specified, be subjected for 1 hour to a hydrostatic pressure test of 1.38 MPa (200 psi). Each valve shall be opened and closed several times during the test. Exposed pipe, joints, fittings, hydrants, and valves shall be carefully examined during the partially open trench test. Joints showing visible leakage shall be replaced or remade as necessary. Cracked or defective pipe, joints, fittings, hydrants and valves, discovered in consequence of this pressure test shall be removed and replaced with sound material, and the test shall be repeated until the test results are satisfactory. The requirement for the joints to remain exposed for the hydrostatic tests may be waived by the Contracting Officer when one or more of the following conditions is encountered:

a. Wet or unstable soil conditions in the trench.

b. Compliance would require maintaining barricades and walkways around and across an open trench in a heavily used area that would require continuous surveillance to assure safe conditions.

c. Maintaining the trench in an open condition would delay completion of the contract.

The Contractor may request a waiver, setting forth in writing the reasons for the request and stating the alternative procedure proposed to comply with the required hydrostatic tests. Backfill placed prior to the tests shall be placed in accordance with the requirements of Section 02222 EXCAVATION, TRENCHING, AND BACKFILLING FOR UTILITIES SYSTEMS.

3.2.2 Leakage Test

Leakage test shall be conducted after the pressure tests have been satisfactorily completed. The duration of each leakage test shall be at least 2 hours, and during the test the water line shall be subjected to not less than 1.38 MPa (200 psi) pressure. Leakage is defined as the quantity of water to be supplied into the newly laid pipe, or any valved or approved section thereof, necessary to maintain pressure within 34.5 kPa (5 psi) of the specified leakage test pressure after the pipe has been filled with water and the air expelled. No piping installation will be accepted if leakage exceeds the allowable leakage which is determined by the following formula:

L = 0.0001351ND(P raised to 1/2 power)

L = Allowable leakage in gallons per hour
N = Number of joints in the length of pipeline tested
D = Nominal diameter of the pipe in inches
P = Average test pressure during the leakage test, in psi gauge

Should any test of pipe disclose leakage greater than that calculated by the above formula, the defective joints shall be located and repaired until the leakage is within the specified allowance, without additional cost to the Government.

3.2.3 Time for Making Test

Except for joint material setting or where concrete thrust blocks necessitate a 5-day delay, pipelines jointed with rubber gaskets, mechanical or push-on joints, or couplings may be subjected to hydrostatic pressure, inspected, and tested for leakage at any time after partial completion of backfill. Cement-mortar lined pipe may be filled with water as recommended by the manufacturer before being subjected to the pressure test and subsequent leakage test.

3.2.4 Concurrent Hydrostatic Tests

The Contractor may elect to conduct the hydrostatic tests using either or both of the following procedures. Regardless of the sequence of tests employed, the results of pressure tests, leakage tests, and disinfection shall be satisfactory as specified. All replacement, repair or retesting required shall be accomplished by the Contractor at no additional cost to the Government.

a. Pressure test and leakage test may be conducted concurrently.

b. Hydrostatic tests and disinfection may be conducted concurrently, using the water treated for disinfection to accomplish the hydrostatic tests. If water is lost when treated for disinfection and air is admitted to the unit being tested, or if any repair procedure results in contamination of the unit, disinfection shall be reaccomplished.

3.3 DISINFECTION

3.3.1 Bacteriological Disinfection

Before acceptance of potable water operation, each unit of completed waterline shall be disinfected as prescribed by AWWA C651. The disinfection shall be repeated until tests indicate the absence of pollution for at least 2 full days. The unit will not be accepted until satisfactory bacteriological results have been obtained.

3.3.2 Lead Residual

Following the bacteriological disinfection and testing, the system shall be flushed with a sufficient velocity of water and sufficient tests performed at each hot- and cold-water discharge point until no more than 15 ppb lead residuals remain in the system. All tests and samples shall be performed in accordance with state and, if applicable, Federal regulations. Samples for testing are to be collected after a 6-hour continuous period of no flushing, and will be considered first draw samples. The commercial laboratory must be certified by the state's approving authority for examination of potable water. Lead residual test results are to be submitted to the Contracting Officer. The system will not be accepted until satisfactory bacteriological results and lead residual test results have been obtained. All flushing and testing for lead residuals, including all costs, are the responsibility of the Contractor.

3.4 CLEANUP

Upon completion of the installation of water lines, and appurtenances, all debris and surplus materials resulting from the work shall be removed.

-- End of Section --

SECTION TABLE OF CONTENTS

DIVISION 02 - SITE WORK

SECTION 02730

SANITARY SEWERS

PART 1 GENERAL

1.1 REFERENCES
1.2 GENERAL REQUIREMENTS
1.3 SUBMITTALS

PART 2 PRODUCTS

2.1 PIPE
2.1.1 Plastic Pipe
2.1.1.1 ABS Pipe
2.1.1.2 PVC Pipe
2.1.1.3 High Density Polyethylene Pipe
2.1.2 Ductile Iron Pipe
2.1.3 Clay Pipe
2.2 FITTINGS
2.2.1 Concrete Pipe
2.2.2 Plastic Pipe
2.2.2.1 ABS Pipe
2.2.2.2 PVC Pipe
2.2.2.3 High Density Polyethylene Pipe
2.2.3 Ductile Iron Pipe
2.2.4 Clay Pipe
2.3 JOINTS
2.3.1 Concrete Pipe
2.3.2 Plastic Pipe
2.3.2.1 ABS Pipe
2.3.2.2 High Density Polyethylene Pipe
2.3.3 Ductile Iron Pipe
2.3.4 Clay Pipe
2.4 CEMENT MORTAR
2.4.1 Portland Cement
2.4.2 Portland Cement Concrete
2.5 STRUCTURES
2.5.1 SEPTIC TANK
2.5.2 Junction Box

PART 3 EXECUTION

3.1 INSTALLATION
3.1.1 Adjacent Facilities
3.1.1.1 Water Lines
3.1.2 Pipe Laying
3.1.2.1 Caulked Joints
3.1.2.2 Trenches
3.1.2.3 Backfill

3.1.2.4 Width of Trench
3.1.2.5 Joints
3.1.2.6 Handling and Storage
3.1.3 Leakage Tests
3.1.4 Test for Deflection
3.2 BUILDING CONNECTIONS
3.3 CLEANOUTS AND OTHER APPURTENANCES

-- End of Section Table of Contents --

SECTION 02730

SANITARY SEWERS

PART 1 GENERAL

1.1 REFERENCES

The publications listed below form a part of this specification to the extent referenced. The publications are referred to in the text by basic designation only.

AMERICAN SOCIETY FOR TESTING AND MATERIALS (ASTM)

ASTM C 14	(1995) Concrete Sewer, Storm Drain, and Culvert Pipe
ASTM C 94	(1995) Ready-Mixed Concrete
ASTM C 150	(1995) Portland Cement
ASTM C 270	(1995a) Mortar for Unit Masonry
ASTM C 425	(1995) Compression Joints for Vitrified Clay Pipe and Fittings
ASTM C 443	(1994) Joints for Circular Concrete Sewer and Culvert Pipe, Using Rubber Gaskets
ASTM C 700	(1995) Vitrified Clay Pipe, Extra Strength, Standard Strength, and Perforated
ASTM C 828	(1990) Low-Pressure Air Test of Vitrified Clay Pipe Lines
ASTM C 924	(1989) Concrete Pipe Sewer Lines by Low-Pressure Air Test Method
ASTM D 1784	(1992) Rigid Poly(Vinyl Chloride) (PVC) Compounds and Chlorinated Poly(Vinyl Chloride) (CPVC) Compounds
ASTM D 2680	(1995)Acrylonitrile-Butadiene-Styrene (ABS) and Poly(Vinyl Chloride) (PVC) Composite Sewer Piping
ASTM D 2751	(1993) Acrylonitrile-Butadiene-Styrene (ABS) Sewer Pipe and Fittings
ASTM D 3034	(1994) Type PSM Poly(Vinyl Chloride) (PVC) Sewer Pipe and Fittings
ASTM D 3212	(1992) Joints for Drain and Sewer Plastic Pipes Using Flexible Elastomeric Seals

ASTM D 3350	(1993) Polyethylene Plastics Pipe and Fittings Materials
ASTM F 402	(1993) Safe Handling of Solvent Cements, Primers, and Cleaners Used for Joining Thermoplastic Pipe and Fittings
ASTM F 714	(1994) Polyethylene (PE) Plastic pipe (SDR-PR) Based on Outside Diameter
ASTM F 794	(1995a) Poly(Vinyl Chloride) (PVC) Profile Gravity Sewer Pipe and Fittings Based on Controlled Inside Diameter
ASTM F 894	(1995) Polyethylene (PE) Large Diameter Profile Wall Sewer and Drain Pipe
ASTM F 949	(1993a) Poly(Vinyl Chloride) (PVC) Corrugated Sewer Pipe with a Smooth Interior and Fittings

AMERICAN WATER WORKS ASSOCIATION (AWWA)

AWWA C110	(1993) Ductile-Iron and Gray-Iron Fittings, 3 In. Through 48 In. (75 mm through 1200 mm), for Water and Other Liquids
AWWA C111	(1990) Rubber-Gasket Joints for Ductile-Iron Pressure Pipe and Fittings
AWWA C115	(1988) Flanged Ductile-Iron Pipe with Threaded Flanges
AWWA C151	(1991) Ductile-Iron Pipe, Centrifugally Cast, for Water or Other Liquids

NATIONAL FIRE PROTECTION ASSOCIATION (NFPA)

NFPA 49	(1994) Hazardous Chemicals Data
NFPA 325M	(1991) Fire Hazard Properties of Flammable Liquids, Gases, and Volatile Solids
NFPA 704	(1990) Identification of the Fire Hazards of Materials

UNI-BELL PVC PIPE ASSOCIATION (UBPPA)

UBPPA UNI-B-6	(1990) Recommended Practice for the Low-Pressure Air Testing of Installed Sewer Pipe
UBPPA UNI-B-9	(1990; Addenda 1994) Recommended Performance Specification for Polyvinyl Chloride (PVC) Profile Wall Gravity Sewer Pipe and Fittings Based on Controlled

Inside Diameter (Nominal Pipe Sizes 4-48 inch)

1.2 GENERAL REQUIREMENTS

The construction required herein shall include appurtenant structures and building sewers to points of connection with the building drains 1.5 m outside the building to which the sewer system is to be connected. The Contractor shall replace damaged material and redo unacceptable work at no additional cost to the Government. Excavation and backfilling is specified in Section 02222 EXCAVATION, TRENCHING, AND BACKFILLING FOR UTILITIES SYSTEMS. Backfilling shall be accomplished after inspection by the Contracting Officer. Force mains and inverted siphons are specified in Section 02732 FORCE MAINS AND INVERTED SIPHONS; SEWER. Before, during, and after installation, plastic pipe and fittings shall be protected from any environment that would result in damage or deterioration to the material. The Contractor shall have a copy of the manufacturer's instructions available at the construction site at all times and shall follow these instructions unless directed otherwise by the Contracting Officer. Solvents, solvent compounds, lubricants, elastomeric gaskets, and any similar materials required to install the plastic pipe shall be stored in accordance with the manufacturer's recommendation and shall be discarded if the storage period exceeds the recommended shelf life. Solvents in use shall be discarded when the recommended pot life is exceeded.

1.3 SUBMITTALS

Government approval is required for submittals with a "GA" designation; submittals having an "FIO" designation are for information only. The following shall be submitted in accordance with Section 01330 SUBMITTAL PROCEDURES:

SD-04 Drawings

Septic Tank; GA

PART 2 PRODUCTS

2.1 PIPE

Pipe shall conform to the respective specifications and other requirements specified below.

2.1.1 Plastic Pipe

Acrylonitrile-butadiene-styrene (ABS) and polyvinyl chloride (PVC) composite sewer piping shall conform to ASTM D 2680.

2.1.1.1 ABS Pipe

ASTM D 2751.

2.1.1.2 PVC Pipe

ASTM D 3034, Type PSM with a maximum SDR of 35, Size 380 mm (15 inch) or less in diameter. ASTM F 949 for corrugated sewer pipes with a smooth interior. PVC shall be certified by the compounder as meeting the requirements of ASTM D 1784, cell Class 12454B. The pipe stiffness shall

be greater than or equal to 735/D for cohesionless material pipe trench backfills.

2.1.1.3 High Density Polyethylene Pipe

ASTM F 714, size 100 mm (4 inch)) through 1200 mm (48 inch). The polyethylene shall be certified by the resin producer as meeting the requirements of ASTM D 3350, cell Class 334433C. The pipe stiffness shall be greater than or equal to 1170/D for cohesionless material pipe trench backfills.

2.1.2 Ductile Iron Pipe

Pipe shall conform to AWWA C151 unless otherwise shown or specified.

2.1.3 Clay Pipe

ASTM C 700 Extra strength.

2.2 FITTINGS

Fittings shall be compatible with the pipe supplied and shall have a strength not less than that of the pipe. Fittings shall conform to the respective specifications and other requirements specified below.

2.2.1 Concrete Pipe

ASTM C 14 for pipe 600 mm (24 inches) or less in diameter.

2.2.2 Plastic Pipe

ABS and PVC composite sewer pipe fittings shall conform to ASTM D 2680.

2.2.2.1 ABS Pipe

ASTM D 2751.

2.2.2.2 PVC Pipe

ASTM D 3034 for type PSM pipe. ASTM F 949 for corrugated sewer pipe with a smooth interior. UBPPA UNI-B-9 and ASTM F 794, Series 46, for ribbed sewer pipe with smooth interior.

2.2.2.3 High Density Polyethylene Pipe

ASTM F 894.

2.2.3 Ductile Iron Pipe

Mechanical fittings shall conform to AWWA C110, rated for 1.03 MPa (150 psi). Push-on fittings shall conform to AWWA C110and AWWA C111, rated for 10.3 MPa (150 psi).

2.2.4 Clay Pipe

ASTM C 700 Extra strength.

2.3 JOINTS

Joints installation shall comply with the manufacturer's instructions.

2.3.1 Concrete Pipe

Joints and gaskets shall conform to ASTM C 443.

2.3.2 Plastic Pipe

Flexible plastic pipe (PVC or high density polyethylene pipe) gasketed joints shall conform to ASTM D 3212.

2.3.2.1 ABS Pipe

ASTM D 2751, solvent weld or bell and spigot O-ring joint, size 300 mm (12 inches) or less in diameter, dimensions and tolerances in accordance with Table 2 therein.

2.3.2.2 High Density Polyethylene Pipe

Rubber gasket joints shall conform to ASTM C 443.

2.3.3 Ductile Iron Pipe

Push-on joints shall conform to AWWA C111. Mechanical joints shall conform to AWWA C111 as modified by AWWA C151. Flanged joints shall conform to AWWA C115.

2.3.4 Clay Pipe

Compression joints shall conform to ASTM C 425.

2.4 CEMENT MORTAR

Cement mortar shall conform to ASTM C 270, Type M with Type II cement.

2.4.1 Portland Cement

Portland cement shall conform to ASTM C 150, Type II for concrete used in concrete pipe and concrete pipe fittings.

2.4.2 Portland Cement Concrete

Portland cement concrete shall conform to ASTM C 94, compressive strength of 28 MPa at 28 days. Concrete in place shall be protected from freezing and moisture loss for 7 days.

2.5 STRUCTURES

2.5.1 SEPTIC TANK

The septic tank shall be precast concrete and shall be located as shown. Precast unit shall be any precast unit commercially available for the capacity indicated. Shop drawings of the precast septic tank shall be submitted for approval. Septic tank shall be installed per manufacturer's directions and as indicated on the drawings.

2.5.2 Junction Box

Junction Box shall be precast concrete and installed where shown.

PART 3 EXECUTION

3.1 INSTALLATION

3.1.1 Adjacent Facilities

3.1.1.1 Water Lines

Where the location of the sewer is not clearly defined by dimensions on the drawings, the sewer shall not be closer horizontally than 3 m to a water-supply main or service line, except that where the bottom of the water pipe will be at least 300 mm above the top of the sewer pipe, the horizontal spacing may be a minimum of 2 m. Where gravity-flow sewers cross above water lines, the sewer pipe for a distance of 3 m on each side of the crossing shall be fully encased in concrete or shall be acceptable pressure pipe with no joint closer horizontally than 1 m to the crossing. The thickness of the concrete encasement including that at the pipe joints shall be not less than 100 mm.

3.1.2 Pipe Laying

a. Pipe shall be protected during handling against impact shocks and free fall and the pipe interior shall be free of extraneous material.

b. Pipe laying shall proceed upgrade with the spigot ends of bell-and-spigot pipe and tongue ends of tongue-and-groove pipe pointing in the direction of the flow. Each pipe shall be laid accurately to the line and grade shown on the drawings. Pipe shall be laid and centered so that the sewer has a uniform invert. As the work progresses, the interior of the sewer shall be cleared of all superfluous materials.

c. Before making pipe joints all surfaces of the portions of the pipe to be joined shall be clean and dry. Lubricants, primers, and adhesives shall be used as recommended by the pipe manufacturer. The joints shall then be placed, fitted, joined, and adjusted to obtain the degree of water tightness required.

d. ABS composite pipe ends with exposed truss and filler material shall be coated with solvent weld material before making the joint to prevent water or air passage at the joint between the inner and outer wall of the pipe.

e. Installations of solvent weld joint pipe, using ABS or PVC pipe and fittings shall be in accordance with ASTM F 402. All required precautions shall be taken to assure adequate trench ventilation and protection for workers installing the pipe.

3.1.2.1 Caulked Joints

The packing material shall be well packed into the annular space to prevent the entrance of lead into the pipe. The remainder of the space shall be filled with molten lead that is hot enough to show a rapid change in color when stirred. Scum shall be removed before pouring. The lead shall be caulked to form a tight joint without overstraining the bell and shall have a minimum depth of 25 mm after caulking.

3.1.2.2 Trenches

Trenches shall be kept free of water and as dry as possible during bedding, laying, and jointing and for as long a period as required. When work is not in progress, open ends of pipe and fittings shall be satisfactorily closed so that no trench water or other material will enter the pipe or fittings.

3.1.2.3 Backfill

As soon as possible after the joint is made, sufficient backfill material shall be placed along the pipe to prevent pipe movement off line or grade. Plastic pipe shall be completely covered to prevent damage from ultraviolet light.

3.1.2.4 Width of Trench

If the maximum width of the trench at the top of the pipe, as specified in Section 02222 EXCAVATION, TRENCHING, AND BACKFILLING FOR UTILITIES SYSTEMS, is exceeded for any reason other than by direction, the Contractor shall install at no additional cost to the Government such concrete cradling, pipe encasement, or other bedding required to support the added load of the backfill.

3.1.2.5 Joints

Joints between different pipe materials shall be made as specified, using approved jointing materials.

3.1.2.6 Handling and Storage

Pipe, fittings and joint material shall be handled and stored in accordance with the manufacturer's recommendations. Storage facilities for plastic pipe, fittings, joint materials and solvents shall be classified and marked in accordance with NFPA 704, with classification as indicated in NFPA 49 and NFPA 325M.

3.1.3 Leakage Tests

Lines shall be tested for leakage by low pressure air testing, infiltration tests or exfiltration tests, as appropriate. Low pressure air testing for vitrified clay pipes shall be as prescribed in ASTM C 828. Low pressure air testing for concrete pipes shall be as prescribed in ASTM C 828. Low pressure air testing for PVC pipe shall be as prescribed in UBPPA UNI-B-6. Low pressure air testing procedures for other pipe materials shall use the pressures and testing times prescribed in ASTM C 828 and ASTM C 924, after consultation with the pipe manufacturer. Prior to infiltration or exfiltration tests the trench shall be backfilled up to at least the lower half of the pipe. If required, sufficient additional backfill shall be placed to prevent pipe movement during testing, leaving the joints uncovered to permit inspection. Visible leaks encountered shall be corrected regardless of leakage test results. When the water table is 600 mm or more above the top of the pipe at the upper end of the pipeline section to be tested, infiltration shall be measured using a suitable weir or other device acceptable to the Contracting Officer. When the Contracting Officer determines that infiltration cannot be properly tested, an exfiltration test shall be made by filling the line to be tested with water so that a head of at least 600 mm is provided above both the water table and the top of the pipe at the upper end of the pipeline to be

tested. The filled line shall be allowed to stand until the pipe has reached its maximum absorption, but not less than 4 hours. After absorption, the head shall be re-established. The amount of water required to maintain this water level during a 2-hour test period shall be measured. Leakage as measured by either the infiltration test or exfiltration test shall not exceed 50 mL per 5 mm diameter per 100 meters of pipeline per hour. When leakage exceeds the maximum amount specified, satisfactory correction shall be made and retesting accomplished. Testing, correction, and retesting shall be made at no additional cost to the Government.

3.1.4 Test for Deflection

When flexible pipe is used, a deflection test shall be made on the entire length of the installed pipeline not less than 30 days after the completion of all work including the leakage test, backfill, and placement of any fill, grading, paving, concrete, or superimposed loads. Deflection shall be determined by use of a deflection device or by use of a spherical, spheroidal, or elliptical ball, a cylinder, or circular sections fused to a common shaft. The ball, cylinder, or circular sections shall have a diameter, or minor diameter as applicable, of 92.5 percent of the inside diameter of the pipe. A tolerance of plus 0.5 percent will be permitted. The ball, cylinder, or circular sections shall be of a homogeneous material throughout, shall have a density greater than 1.0 as related to water at 4.0 degrees C (39.2 degrees F), and shall have a surface brinell hardness of not less than 150. It shall be center bored and through bolted with a 6.4 mm (1/4 inch) minimum diameter steel shaft having a yield strength of 480 MPa (70,000 psi) or more, with eyes at each end for attaching pulling cables. The eye shall be suitably backed with flange or heavy washer such that a pull exerted on the opposite end of the shaft shall produce compression throughout the remote end of the ball, cylinder or circular section. Circular sections shall be so spaced that the distance from the external faces of the front and back sections shall equal or exceed the diameter of the circular section. Failure of the ball, cylinder, or circular section to pass freely through a pipe run, either by being pulled through or by being flushed through with water, shall be cause for rejection of that run. When a deflection device is used for the test in lieu of the ball, cylinder, or circular sections described, such device shall be approved prior to use. The device shall be sensitive to 1.0 percent of the diameter of the pipe being measured and shall be accurate to 1.0 percent of the indicated dimension. Installed pipe showing deflections greater than 7.5 percent of the normal diameter of the pipe shall be retested by a run from the opposite direction. If the retest also fails, the suspect pipe shall be replaced at no cost to the Government.

3.2 BUILDING CONNECTIONS

Building connections shall include the lines to and connection with the building waste drainage piping at a point approximately 1.5 m outside the building, unless otherwise indicated. Where building drain piping is not installed, the Contractor shall terminate the building connections approximately 1.5 m from the site of the building at a point and in a manner designated.

3.3 CLEANOUTS AND OTHER APPURTENANCES

Cleanouts and other appurtenances shall be installed where shown on the drawings or as directed by the Contracting Officer, and shall conform to the detail of the drawings.

-- End of Section --

SECTION TABLE OF CONTENTS

DIVISION 02 - SITE WORK

SECTION 02831

FENCE, CHAIN-LINK

PART 1 GENERAL

1.1 REFERENCES
1.2 EXISTING FENCE

PART 2 PRODUCTS

2.1 CHAIN LINK FENCE AND FABRIC
2.1.1 Gates
2.1.2 Posts
2.1.3 Braces
2.1.4 Accessories
2.2 CONCRETE

PART 3 EXECUTION

3.1 GENERAL
3.2 POSTS
3.3 BRACES AND TRUSS RODS
3.4 TENSION WIRES
3.5 CHAIN-LINK FABRIC
3.6 GATES

-- End of Section Table of Contents --

SECTION 02831

FENCE, CHAIN-LINK

PART 1 GENERAL

1.1 REFERENCES

The publications listed below form a part of this specification to the extent referenced. The publications are referred to in the text by basic designation only.

AMERICAN SOCIETY FOR TESTING AND MATERIALS (ASTM)

ASTM A 392	(1996) Zinc-Coated SteelChain-Link Fence Fabric
ASTM A 491	(1996) Aluminum-Coated Steel Chain-Link Fence Fabric
ASTM A 824	(1992) Metallic-Coated Steel Marcelled Tension Wire for Use With Chain Link Fence
ASTM C 94	(1996) Ready-Mixed Concrete
ASTM F 626	(1996) Fence Fittings
ASTM F 900	(1994) Industrial and Commercial Swing Gates
ASTM F 1043	(1995) Strength and Protective Coatings on Metal Industrial Chain-Link Fence Framework
ASTM F 1083	(1996) Specification for Pipe, Steel, Hot-Dipped Zinc-Coated (Galvanized) Welded, for Fence Structures
ASTM F 1184	(1994) Industrial and Commercial Horizontal Slide Gates

1.2 EXISTING FENCE

Removal of refuse and disposal of existing fencing shall be as indicated and as specified in Section 02050 DEMOLITION.

PART 2 PRODUCTS

2.1 CHAIN LINK FENCE AND FABRIC

When connecting to existing fence, the type or class of fabric, gates, posts, and accessories shall be equivalent in materials and quality to existing fence. Type and class shall be uniform.

ASTM A 392, Class 1, with minimum coating of 370 grams of zinc per square meter (foot) of coated surface, or ASTM A 491, Type I. Fabric shall be

fabricated of 9-gauge wire woven in 52.4 mm (2 inch) mesh. Fabric height shall be 1.83 meters .

2.1.1 Gates

ASTM F 900 and/or ASTM F 1184. Gate shall be the type and swing shown. Gate frames shall conform to strength and coating requirements of ASTM F 1083 for Group IA, steel pipe, with external coating Type A, nominal pipe size (NPS) 1-1/2. Gate frames shall conform to strength and coating requirements of ASTM F 1043, for Group IC, steel pipe with external coating Type A or Type B, nominal pipe size (NPS) 1-1/2. Gate leaves less than 2.44 meters (8 feet) wide shall have truss rods or intermediate braces. Gate fabric shall be attached by method standard with the manufacturer. Hardware items shall be furnished as required for the operation of the gate. Latches shall be arranged so that padlock will be accessible from both sides of the gate.

2.1.2 Posts

ASTM F 1083, zinc-coated; Group IA, with external coating Type A steel pipe. Group IC steel pipe, zinc-coated with external coating Type A or Type B and Group II, formed steel sections shall meet the strength and coating requirements of ASTM F 1043. Group III, ASTM F 1043, steel H-sections may be used for line posts in lieu of line post shapes specified for other classes. Gate post shall be for the gate type specified subject to the limitation specified in ASTM F 900and/or ASTM F 1184.

2.1.3 Braces

ASTM F 1083, zinc-coated, Group IA, steel pipe, size NPS 1-1/4. Group IC steel pipe, zinc-coated, shall meet the strength and coating requirements of ASTM F 1043. Group II, formed steel sections, size 42.26 mm (1.66 inch) , may be used as braces and rails if Group II line posts are furnished.

2.1.4 Accessories

ASTM F 626. Truss rods shall be furnished for each terminal post. Truss rods shall be provided with turnbuckles or other equivalent provisions for adjustment. ASTM A 824. Tension wire shall be Type I or Type II, Class 2 coating.

2.2 CONCRETE

ASTM C 94, mixture designed for a minimum compressive strength of 14 MPa at 28 days.

PART 3 EXECUTION

3.1 GENERAL

Fence shall be installed to the lines and grades indicated. The area on either side of the fence line shall be cleared to the extent indicated. Line post shall be spaced equidistant at intervals not exceeding 3.05 meters (10 feet). Terminal (corner, gate, and pull) posts shall be set at abrupt changes in vertical and horizontal alignment. Fabric shall be continuous between terminal posts; however, runs between terminal posts shall not exceed 152.4 meters (500 feet).

3.2 POSTS

Posts shall be set plumb and in alignment. Posts shall be set in concrete to the depth indicated unless solid rock is encountered. Where solid rock is encountered, posts shall be set to the lesser of 457 mm (18 inches) in solid rock or indicated depth. All portions of posts set in rock shall be grouted. Portions of posts not set in rock shall be set in concrete from the rock to ground level. Posts set in concrete shall be set in holes not less than indicated diameter. Diameters of holes in solid rock shall be at least 25.4 mm (1 inch) greater than the largest cross section of the post. Concrete and grout shall be thoroughly consolidated around each post, shall be free of voids and finished to form a dome. Concrete and grout shall be allowed to cure for 72 hours prior to attachment of any item to the posts. Group II line posts may be mechanically driven, for temporary fence construction only, if rock is not encountered. Driven posts shall be set a minimum of 914 mm (3 feet) and shall be protected with drive caps when being set.

3.3 BRACES AND TRUSS RODS

Braces and truss rods shall be installed as indicated and in conformance with the standard practice for the fence furnished. No bracing is required on fences 1.8 meters high or less if a top rail is installed.

3.4 TENSION WIRES

Tension wires shall be installed along the top and bottom of the fence line and attached to the terminal posts of each stretch of the fence. Top tension wires shall be installed within the top 305 mm (1 foot) of the installed fabric. Bottom tension wire shall be installed within the bottom 152 mm (6 inches) of the installed fabric. Tension wire shall be pulled taut and shall be free of sag.

3.5 CHAIN-LINK FABRIC

Chain-link fabric shall be installed on the side of the post indicated. Fabric shall be attached to terminal posts with stretcher bars and tension bands. Bands shall be spaced at approximately 381 mm (15 inch) intervals. Fabric shall be pulled taut to provide a smooth, uniform appearance free from sag. Fabric shall be fastened to line posts at approximately 381 mm (15 inch) intervals and fastened to rails and tension wires at approximately 610 mm (24 inch) intervals. Fabric shall be cut by untwisting and removing pickets. Splicing shall be accomplished by weaving a single picket into the ends of the rolls to be joined.

3.6 GATES

Gates shall be installed at the locations shown. Hinged gates shall be mounted to swing as indicated. Latches, stops, and keepers shall be installed as required.

-- End of Section --

SECTION TABLE OF CONTENTS

DIVISION 03 - CONCRETE

SECTION 03100

STRUCTURAL CONCRETE FORMWORK

PART 1 GENERAL

1.1 REFERENCES
1.2 SUBMITTALS
1.3 DESIGN

PART 2 PRODUCTS

2.1 FORM MATERIALS
2.1.1 Forms For Class B Finish
2.1.2 Forms For Class C Finish
2.1.3 Forms For Class D Finish
2.1.4 Retain-In-Place Metal Forms
2.1.5 Form Ties
2.1.6 Form Releasing Agents

PART 3 EXECUTION

3.1 INSTALLATION
3.1.1 Formwork
3.2 CHAMFERING
3.3 COATING
3.4 REMOVAL OF FORMS
3.5 CONSTRUCTION QUALITY CONTROL

-- End of Section Table of Contents --

SECTION 03100

STRUCTURAL CONCRETE FORMWORK

PART 1 GENERAL

1.1 REFERENCES

The publications listed below form a part of this specification to the extent referenced. The publications are referred to in the text by basic designation only.

AMERICAN CONCRETE INSTITUTE (ACI)

ACI 347R (1994) Guide to Formwork for Concrete

AMERICAN HARDBOARD ASSOCIATION (AHA)

AHA A135.4 (1995) Basic Hardboard

DEPARTMENT OF COMMERCE (DOC)

DOC PS 1 (1983) Construction and Industrial Plywood

1.2 SUBMITTALS

Government approval is required for submittals with a "GA" designation; submittals having an "FIO" designation are for information only. The following shall be submitted in accordance with Section 01300 SUBMITTAL PROCEDURES:

SD-01 Data

Design; FIO.

Design analysis and calculations for form design and methodology used in the design.

Concrete Formwork; FIO.

Manufacturer's data including literature describing form materials, accessories, and form releasing agents.

SD-04 Drawings

Concrete Formwork; FIO.

Drawings showing details of formwork including, joints, supports, studding and shoring, and sequence of form and shoring removal.

SD-06 Instructions

Form Releasing Agents; FIO.

Manufacturer's recommendation on method and rate of application of form releasing agents.

1.3 DESIGN

Formwork shall be designed in accordance with methodology of ACI 347R for anticipated loads, lateral pressures, and stresses. Forms shall be capable of producing a surface which meets the requirements of the class of finish specified in Section 03300 CONCRETE FOR BUILDING CONSTRUCTION. Forms shall be capable of withstanding the pressures resulting from placement and vibration of concrete.

PART 2 PRODUCTS

2.1 FORM MATERIALS

2.1.1 Forms For Class B Finish

Forms for Class B finished surfaces shall be plywood panels conforming to DOC PS 1, Grade B-B concrete form panels, Class I or II. Other form materials or liners may be used provided the smoothness and appearance of concrete produced will be equivalent to that produced by the plywood concrete form panels. Forms for round columns shall be the prefabricated seamless type.

2.1.2 Forms For Class C Finish

Forms for Class C finished surfaces shall be shiplap lumber; plywood conforming to DOC PS 1, Grade B-B concrete form panels, Class I or II; tempered concrete form hardboard conforming to AHA A135.4; other approved concrete form material; or steel, except that steel lining on wood sheathing shall not be used. Forms for round columns may have one vertical seam.

2.1.3 Forms For Class D Finish

Forms for Class D finished surfaces, except where concrete is placed against earth, shall be wood or steel or other approved concrete form material.

2.1.4 Retain-In-Place Metal Forms

Retain-in-place metal forms for concrete slabs and roofs shall be as specified in Section 05300 STEEL DECKING.

2.1.5 Form Ties

Form ties shall be factory-fabricated metal ties, shall be of the removable or internal disconnecting or snap-off type, and shall be of a design that will not permit form deflection and will not spall concrete upon removal. Solid backing shall be provided for each tie. Except where removable tie rods are used, ties shall not leave holes in the concrete surface less than 6 mm nor more than 25 mm deep and not more than 25 mm in diameter. Removable tie rods shall be not more than 38 mm in diameter.

2.1.6 Form Releasing Agents

Form releasing agents shall be commercial formulations that will not bond with, stain or adversely affect concrete surfaces. Agents shall not impair subsequent treatment of concrete surfaces depending upon bond or adhesion nor impede the wetting of surfaces to be cured with water or curing compounds.

PART 3 EXECUTION

3.1 INSTALLATION

3.1.1 Formwork

Forms shall be mortar tight, properly aligned and adequately supported to produce concrete surfaces meeting the surface requirements specified in Section 03300 CONCRETE FOR BUILDING CONSTRUCTION and conforming to construction tolerance given in TABLE 1. Where concrete surfaces are to have a Class A or Class B finish, joints in form panels shall be arranged as approved. Where forms for continuous surfaces are placed in successive units, care shall be taken to fit the forms over the completed surface so as to obtain accurate alignment of the surface and to prevent leakage of mortar. Forms shall not be reused if there is any evidence of surface wear and tear or defects which would impair the quality of the surface. Surfaces of forms to be reused shall be cleaned of mortar from previous concreting and of all other foreign material before reuse. Form ties that are to be completely withdrawn shall be coated with a nonstaining bond breaker.

3.2 CHAMFERING

Except as otherwise shown, external corners that will be exposed shall be chamfered, beveled, or rounded by moldings placed in the forms.

3.3 COATING

Forms for Class B finished surfaces shall be coated with a form releasing agent before the form or reinforcement is placed in final position. The coating shall be used as recommended in the manufacturer's printed or written instructions. Forms for Class C and D finished surfaces may be wet with water in lieu of coating immediately before placing concrete, except that in cold weather with probable freezing temperatures coating shall be mandatory. Surplus coating on form surfaces and coating on reinforcing steel and construction joints shall be removed before placing concrete.

3.4 REMOVAL OF FORMS

Forms shall be removed in a manner that will prevent injury to the concrete and ensure the complete safety of the structure. Formwork for columns, walls, side of beams and other parts not supporting the weight of concrete may be removed when the concrete has attained sufficient strength to resist damage from the removal operation but not before at least 24 hours has elapsed since concrete placement. Supporting forms and shores shall not be removed from beams, floors and walls until the structural units are strong enough to carry their own weight and any other construction or natural loads. In no case will supporting forms or shores be removed before the concrete strength has reached 70 percent of design strengths as determined by field cured cylinders or other approved methods. This strength shall be demonstrated by job-cured test specimens, and by a structural analysis

considering the proposed loads in relation to these test strengths and the strength of forming and shoring system. The job-cured test specimens for form removal purposes shall be provided in numbers as directed and shall be in addition to those required for concrete quality control. The specimens shall be removed from molds at the age of 24 hours and shall receive, insofar as possible, the same curing and protection as the structures they represent.

TABLE 1

TOLERANCES FOR FORMED SURFACES

1. Variations from the plumb:	In any 3 m of length ---------6 mm
a. In the lines and surfaces of columns, piers, walls and in arises	Maximum for entire length ---25 mm
b. For exposed corner columns, control-joint grooves, and other conspicuous lines	In any 6 m of length ---------6 mm Maximum for entire length ---13 mm
2. Variation from the level or from the grades indicated on the drawings:	In any 3 m of length ---------6 mm In any bay or in any 6 m of length ---------- 10 mm
a. In slab soffits, ceilings, beam soffits, and in arises, measured before removal of supporting shores	Maximum for entire length ---20 mm
b. In exposed lintels, sills, parapets, horizontal grooves, and other conspicuous lines	In any bay or in any 6 m of length - ---------- 6 mm Maximum for entire length----13 mm
3. Variation of the linear building lines from established position in plan	In any 6 m ----------13 mm Maximum ----------25 mm
4. Variation of distance between walls, columns, partitions	6 mm per 3 m of distance, but not more than 13 mm in any one bay, and not more than 25 mm total variation
5. Variation in the sizes and locations of sleeves, floor openings, and wall opening	Minus ---------- 6 mm Plus ---------- 13 mm
6. Variation in cross-sectional dimensions of columns and beams and in the thickness	Minus ---------- 6 mm Plus ----------13 mm of slabs and walls
7. Footings:	
a. Variation of dimensions	Minus ---------- 13 mm

TABLE 1

TOLERANCES FOR FORMED SURFACES

in plan	Plus ---------- 50 mm when formed or plus 75 mm when placed against unformed excavation
b. Misplacement of eccentricity	2 percent of the footing width in the direction of misplacement but not more than --------- 50 mm
c. Reduction in thickness	Minus ----------5 percent of specified thickness
8. Variation in steps:	Riser ---------- 3 mm
a. In a flight of stairs	Tread ---------- 6 mm
b. In consecutive steps	Riser ---------- 2 mm Tread ---------- 3 mm

3.5 CONSTRUCTION QUALITY CONTROL

Attention is directed to SECTION: CONSTRUCTION QUALITY CONTROL which requires the Contractor to perform quality control inspection, testing, and reporting.

-- End of Section --

SECTION TABLE OF CONTENTS

DIVISION 03 - CONCRETE

SECTION 03200

CONCRETE REINFORCEMENT

PART 1 GENERAL

1.1 REFERENCES
1.2 SUBMITTALS
1.3 QUALIFICATIONS
1.4 DELIVERY AND STORAGE

PART 2 PRODUCTS

2.1 FABRICATED BAR MATS
2.2 REINFORCING STEEL
2.3 WIRE TIES
2.4 SUPPORTS

PART 3 EXECUTION

3.1 REINFORCEMENT
3.1.1 Placement
3.1.2 Splicing
3.2 CONSTRUCTION QUALITY CONTROL

-- End of Section Table of Contents --

SECTION 03200

CONCRETE REINFORCEMENT

PART 1 GENERAL

1.1 REFERENCES

The publications listed below form a part of this specification to the extent referenced. The publications are referred to in the text by basic designation only.

ACI INTERNATIONAL (ACI)

ACI 318/318R	(1995) Building Code Requirements for Reinforced Concrete and Commentary

AMERICAN SOCIETY FOR TESTING AND MATERIALS (ASTM)

ASTM A 82	(1995a) Steel Wire, Plain, for Concrete Reinforcement
ASTM A 184/A 184M	(1996) Fabricated Deformed Steel Bar Mats for Concrete Reinforcement
ASTM A 615	(1996) Deformed and Plain Billet-Steel Bars for Concrete Reinforcement
ASTM A 706/A 706M	(1995b) Low-Alloy Steel Deformed and Plain Bars for Concrete Reinforcement

AMERICAN WELDING SOCIETY (AWS)

AWS D1.4	(1992) Structural Welding Code - Reinforcing Steel

CONCRETE REINFORCING STEEL INSTITUTE (CRSI)

CRSI MSP-1	(1996) Manual of Standard Practice

1.2 SUBMITTALS

Government approval is required for submittals with a "GA" designation; submittals having an "FIO" designation are for information only. The following shall be submitted in accordance with Section 01300 SUBMITTAL PROCEDURES:

SD-04 Drawings

Concrete Reinforcement System; GA

Detail drawings showing reinforcing steel schedules, sizes, grades, and splicing and bending details. Drawings shall show support details including types, sizes and spacing.

SD-08 Statements

Qualifications; FIO

A list of names of qualified welders.

SD-13 Certificates

Reinforcing Steel; FIO

Certified copies of mill reports attesting that the reinforcing steel furnished meets the requirements specified, prior to the installation of reinforcing steel.

1.3 QUALIFICATIONS

Welders shall be qualified in accordance with AWS D1.4. Qualification test shall be performed at the worksite and the Contractor shall notify the Contracting Officer 24 hours prior to conducting tests. Special welding procedures and welders qualified by others may be accepted as permitted by AWS D1.4.

1.4 DELIVERY AND STORAGE

Reinforcement and accessories shall be stored off the ground on platforms, skids, or other supports.

PART 2 PRODUCTS

2.1 FABRICATED BAR MATS

Fabricated bar mats shall conform to ASTM A 184/A 184M.

2.2 REINFORCING STEEL

Reinforcing steel shall be deformed bars conforming to ASTM A 615 or ASTM A 706/A 706M, grade 60 and sizes as indicated. Cold drawn wire used for spiral reinforcement shall conform to ASTM A 82.

2.3 WIRE TIES

Wire ties shall be 16 gauge or heavier black annealed steel wire.

2.4 SUPPORTS

Bar supports for formed surfaces shall be designed and fabricated in accordance with CRSI MSP-1 and shall be steel or precast concrete blocks. Precast concrete blocks shall have wire ties and shall be not less than 100 by 100 mm (4 by 4 inches) when supporting reinforcement on ground. Precast concrete block shall have compressive strength equal to that of the surrounding concrete. Where concrete formed surfaces will be exposed to weather or where surfaces are to be painted, steel supports within 13 mm of concrete surface shall be galvanized, plastic protected or of stainless steel. Concrete supports used in concrete exposed to view shall have the same color and texture as the finish surface. For slabs on grade, supports shall be precast concrete blocks, plastic coated steel fabricated with bearing plates, or specifically designed wire-fabric supports fabricated of

plastic.

PART 3 EXECUTION

3.1 REINFORCEMENT

Reinforcement shall be fabricated to shapes and dimensions shown and shall conform to the requirements ofACI 318/318R. Reinforcement shall be cold bent unless otherwise authorized. Bending may be accomplished in the field or at the mill. Bars shall not be bent after embedment in concrete. Safety caps shall be placed on all exposed ends of vertical concrete reinforcement bars that pose a danger to life safety. Wire tie ends shall face away from the forms.

3.1.1 Placement

Reinforcement shall be free from loose rust and scale, dirt, oil, or other deleterious coating that could reduce bond with the concrete. Reinforcement shall be placed in accordance with ACI 318/318R at locations shown plus or minus one bar diameter. Reinforcement shall not be continuous through expansion joints and shall be as indicated through construction or contraction joints. Concrete coverage shall be as indicated or as required by ACI 318/318R. If bars are moved more than one bar diameter to avoid interference with other reinforcement, conduits or embedded items, the resulting arrangement of bars, including additional bars required to meet structural requirements, shall be approved before concrete is placed.

3.1.2 Splicing

Splices of reinforcement shall conform to ACI 318/318R and shall be made only as required or indicated. Splicing shall be by lapping or by mechanical or welded butt connection; except that lap splices shall not be used for bars larger than No. 11 unless otherwise indicated. Welding shall conform to AWS D1.4. Welded butt splices shall be full penetration butt welds. Lapped bars shall be placed in contact and securely tied or spaced transversely apart to permit the embedment of the entire surface of each bar in concrete. Lapped bars shall not be spaced farther apart than one-fifth the required length of lap or 150 mm. Mechanical butt splices shall be in accordance with the recommendation of the manufacturer of the mechanical splicing device. Butt splices shall develop 125 percent of the specified minimum yield tensile strength of the spliced bars or of the smaller bar in transition splices. Bars shall be flame dried before butt splicing. Adequate jigs and clamps or other devices shall be provided to support, align, and hold the longitudinal centerline of the bars to be butt spliced in a straight line.

3.2 CONSTRUCTION QUALITY CONTROL

Attention is directed to SECTION: CONSTRUCTION QUALITY CONTROL which requires the Contractor to perform quality control inspection, testing, and reporting.

-- End of Section --

SECTION TABLE OF CONTENTS

DIVISION 03 - CONCRETE

SECTION 03250

EXPANSION JOINTS AND CONTRACTION JOINTS

PART 1 GENERAL

1.1 REFERENCES
1.2 SUBMITTALS
1.3 DELIVERY AND STORAGE

PART 2 PRODUCTS

2.1 PREFORMED EXPANSION JOINT FILLER
2.2 SEALANT
2.2.1 Hot-Poured Type

PART 3 EXECUTION

3.1 JOINTS
3.1.1 Sawed Joints
3.1.2 Expansion Joints
3.1.3 Joint Sealant
3.2 CONSTRUCTION QUALITY CONTROL

-- End of Section Table of Contents --

SECTION 03250

EXPANSION JOINTS AND CONTRACTION JOINTS

PART 1 GENERAL

1.1 REFERENCES

The publications listed below form a part of this specification to the extent referenced. The publications are referred to in the text by basic designation only.

AMERICAN SOCIETY FOR TESTING AND MATERIALS (ASTM)

ASTM D 1751	(1983; R 1991) Preformed Expansion Joint Filler for Concrete Paving and Structural Construction (Nonextruding and Resilient Bituminous Types)
ASTM D 1752	(1984; R 1992) Preformed Sponge Rubber and Cork Expansion Joint Fillers for Concrete Paving and Structural Construction
ASTM D 5249	(1992) Backer Material for Use With Cold and Hot-Applied Joint Sealants in Portland-Cement Concrete and Asphalt Joints

FEDERAL SPECIFICATIONS (FS)

FS SS-S-1401	(Rev C; Am 1; Notice 1) Sealant, Joint, Non-Jet-Fuel-Resistant, Hot-Applied, for Portland Cement and Asphalt Concrete Pavements

1.2 SUBMITTALS

Government approval is required for submittals with a "GA" designation; submittals having an "FIO" designation are for information only. The following shall be submitted in accordance with Section 01300 SUBMITTAL PROCEDURES:

SD-01 Data

Materials; FIO.

Manufacturer's catalog data and manufacturer's recommended instructions for joint fillers and sealants.

SD-13 Certificates

Materials; GA.

Certificates of compliance stating that the joint filler and sealant

materials conform to the requirements specified.

1.3 DELIVERY AND STORAGE

Material delivered and placed in storage shall be stored off the ground and protected from moisture, dirt, and other contaminants. Sealants shall be delivered in the manufacturer's original unopened containers. Sealants whose shelf life has expired shall be removed from the site.

PART 2 PRODUCTS

2.1 PREFORMED EXPANSION JOINT FILLER

Expansion joint filler shall be preformed material conforming to ASTM D 1751 or ASTM D 1752. Unless otherwise indicated, filler material shall be 10 mm (3/8 inch) thick and of a width applicable for the joint formed. Backer material, when required, shall conform to ASTM D 5249.

2.2 SEALANT

Joint sealant shall conform to the following:

2.2.1 Hot-Poured Type

FS SS-S-1401

PART 3 EXECUTION

3.1 JOINTS

Joints shall be installed at locations indicated and as authorized.

3.1.1 Sawed Joints

Joint sawing shall be early enough to prevent uncontrolled cracking in the slab, but late enough that this can be accomplished without appreciable spalling. Concrete sawing machines shall be adequate in number and power, and with sufficient replacement blades to complete the sawing at the required rate. Joints shall be cut to true alignment and shall be cut in sequence of concrete placement. Sludge and cutting debris shall be removed.

3.1.2 Expansion Joints

Preformed expansion joint filler shall be used in expansion and isolation joints in slabs around columns and between slabs on grade and vertical surfaces where indicated. The filler shall extend the full slab depth, unless otherwise indicated. The edges of the joint shall be neatly finished with an edging tool of 3 mm (1/8 inch) radius, except where a resilient floor surface will be applied. Where the joint is to receive a sealant, the filler strips shall be installed at the proper level below the finished floor with a slightly tapered, dressed and oiled wood strip temporarily secured to the top thereof to form a recess to the size shown on the drawings. The wood strip shall be removed after the concrete has set. Contractor may opt to use a removable expansion filler cap designed and fabricated for this purpose in lieu of the wood strip. The groove shall be thoroughly cleaned of laitance, curing compound, foreign materials, protrusions of hardened concrete, and any dust which shall be blown out of

the groove with oil-free compressed air.

3.1.3 Joint Sealant

Sawed contraction joints and expansion joints in slabs shall be filled with joint sealant, unless otherwise shown. Joint surfaces shall be clean, dry, and free of oil or other foreign material which would adversely affect the bond between sealant and concrete. Joint sealant shall be applied as recommended by the manufacturer of the sealant. Joints sealed with field molded sealant shall be completely filled with sealant.

3.2 CONSTRUCTION QUALITY CONTROL

Attention is directed to SECTION: CONSTRUCTION QUALITY CONTROL which requires the Contractor to perform quality control inspection, testing, and reporting.

-- End of Section --

SECTION TABLE OF CONTENTS

DIVISION 03 - CONCRETE

SECTION 03300

CONCRETE FOR BUILDING CONSTRUCTION

PART 1 GENERAL

1.1 REFERENCES
1.2 SUBMITTALS
1.3 GENERAL REQUIREMENTS
1.3.1 Strength Requirements
1.3.2 Air Entrainment
1.3.3 Special Properties
1.3.4 Slump
1.3.5 Technical Service for Specialized Concrete
1.4 PROPORTIONS OF MIX
1.4.1 Mixture Proportioning, Normal Weight Concrete
1.4.2 Average Strength
1.4.2.1 Test Records Exceeding 29
1.4.2.2 Test Records Less Than 29
1.5 STORAGE OF MATERIALS

PART 2 PRODUCTS

2.1 ADMIXTURES
2.1.1 Accelerating Admixture
2.1.2 Air-Entraining Admixture
2.1.3 Flowing Concrete Admixture
2.1.4 Water-Reducing or Retarding Admixture
2.2 CEMENTITIOUS MATERIALS
2.2.1 Cement
2.2.2 Portland-Pozzolan Cement
2.2.3 Pozzolan
2.3 AGGREGATES
2.3.1 Normal Weight Aggregate
2.4 CURING MATERIALS
2.4.1 Burlap
2.4.2 Impervious Sheets
2.4.3 Membrane-Forming Compounds
2.5 WATER

PART 3 EXECUTION

3.1 PREPARATION OF SURFACES
3.1.1 Foundations
3.2 BATCHING, MIXING AND TRANSPORTING CONCRETE
3.2.1 Admixtures
3.2.2 Control of Mixing Water
3.3 SAMPLING AND TESTING
3.3.1 Aggregates
3.3.2 Sampling of Concrete

3.3.2.1 Air Content
3.3.2.2 Slump
3.3.3 Evaluation and Acceptance of Concrete
3.3.3.1 Frequency of Testing
3.3.3.2 Testing Procedures
3.3.3.3 Evaluation of Results
3.3.4 Investigation of Low-Strength Test Results
3.4 CONVEYING CONCRETE
3.4.1 Chutes
3.4.2 Buckets
3.4.3 Belt Conveyors
3.4.4 Pumps
3.5 CONCRETE PLACEMENT
3.5.1 Placing Operation
3.5.2 Consolidation
3.5.3 Cold Weather Requirements
3.5.4 Warm Weather Requirements
3.6 CONSTRUCTION JOINTS
3.7 FINISHING CONCRETE
3.7.1 Formed Surfaces
3.7.1.1 Repair of Surface Defects
3.7.1.2 Class B Finish
3.7.1.3 Class C Finish
3.7.1.4 Class D Finish
3.7.2 Unformed Surfaces
3.7.2.1 Rough-Slab Finish
3.7.2.2 Float Finish
3.7.2.3 Trowel Finish
3.7.2.4 Broom Finish
3.8 CURING AND PROTECTION
3.8.1 General
3.8.2 Moist Curing
3.8.3 Membrane Curing
3.9 SETTING BASE PLATES AND BEARING PLATES
3.9.1 Damp-Pack Bedding Mortar
3.9.2 Nonshrink Grout
3.10 CONSTRUCTION QUALITY CONTROL

-- End of Section Table of Contents --

SECTION 03300

CONCRETE FOR BUILDING CONSTRUCTION

PART 1 GENERAL

1.1 REFERENCES

The publications listed below form a part of this specification to the extent referenced. The publications are referred to in the text by basic designation only.

AMERICAN CONCRETE INSTITUTE (ACI)

ACI 117/117R	(1990; Errata) Standard Tolerances for Concrete Construction and Materials
ACI 211.1	(1991) Standard Practice for Selecting Proportions for Normal, Heavyweight, and Mass Concrete
ACI 301	(1996) Standard Specifications for Structural Concrete
ACI 305R	(1991) Hot Weather Concreting
ACI 318/318R	(1995) Building Code Requirements for Reinforced Concrete and Commentary

AMERICAN SOCIETY FOR TESTING AND MATERIALS (ASTM)

ASTM C 31	(1991) Making and Curing Concrete Test Specimens in the Field
ASTM C 33	(1993) Concrete Aggregates
ASTM C 39	(1994) Compressive Strength of Cylindrical Concrete Specimens
ASTM C 42	(1994) Obtaining and Testing Drilled Cores and Sawed Beams of Concrete
ASTM C 94	(1996) Ready-Mixed Concrete
ASTM C 109	(1993) Compressive Strength of Hydraulic Cement Mortars (Using 2-in. or 50-mm Cube Specimens)
ASTM C 143	(1990a) Slump of Hydraulic Cement Concrete
ASTM C 150	(1996) Portland Cement
ASTM C 171	(1995) Sheet Materials for Curing Concrete
ASTM C 172	(1990) Sampling Freshly Mixed Concrete

ASTM C 173	(1994a) Air Content of Freshly Mixed Concrete by the Volumetric Method
ASTM C 192	(1990a) Making and Curing Concrete Test Specimens in the Laboratory
ASTM C 231	(1991b) Air Content of Freshly Mixed Concrete by the Pressure Method
ASTM C 260	(1995) Air-Entraining Admixtures for Concrete
ASTM C 309	(1995) Liquid Membrane-Forming Compounds for Curing Concrete
ASTM C 494	(1992) Chemical Admixtures for Concrete
ASTM C 595	(1995a) Blended Hydraulic Cements
ASTM C 597	(1983; R 1991) Pulse Velocity Through Concrete
ASTM C 618	(1996a) Coal Fly Ash and Raw or Calcined Natural Pozzolan for Use as a Mineral Admixture in Portland Cement Concrete
ASTM C 803	(1990) Penetration Resistance of Hardened Concrete
ASTM C 805	(1985) Rebound Number of Hardened Concrete
ASTM C 1017	(1992) Chemical Admixtures for Use in Producing Flowing Concrete

FEDERAL SPECIFICATIONS (FS)

FS CCC-C-467	(Rev C) Cloth, Burlap, Jute (or Kenaf)

NATIONAL READY-MIXED CONCRETE ASSOCIATION (NRMCA)

NRMCA TMMB-01	(1992) Truck Mixer Agitator and Front Discharge Concrete Carrier Standards of the Truck Mixer Manufacturers Bureau
NRMCA CPMB 100	(1990) Concrete Plant Standards
NRMCA QC 3	(1984) Quality Control Manual: Section 3, Plant Certifications Checklist: Certification of Ready-Mixed Concrete Production Facilities

1.2 SUBMITTALS

Government approval is required for submittals with a "GA" designation; submittals having an "FIO" designation are for information only. The following shall be submitted in accordance with Section 01300 SUBMITTAL PROCEDURES:

SD-08 Statements

Proportions of Mix; GA

The results of trial mix along with a statement giving the maximum nominal coarse aggregate size and the proportions of all ingredients that will be used in the manufacture of each strength of concrete, at least 30 days prior to commencing concrete placing operations. Aggregate weights shall be based on the saturated surface dry condition. The statement shall be accompanied by test results from an independent commercial testing laboratory, attesting that the proportions selected will produce concrete of the qualities indicated. No substitutions shall be made in the materials used in the work without additional tests to show that the quality of the concrete is satisfactory.

SD-09 Reports

Sampling and Testing; FIO

Certified copies of laboratory test reports, including all test data, for aggregate, admixtures, and curing compound. These tests shall be made by an approved commercial laboratory or by a laboratory maintained by the manufacturers of the materials.

SD-13 Certificates

Cementitious Materials; FIO

Manufacturer's certification of compliance, accompanied by mill test reports attesting that the materials meet the requirements of the specification under which it is furnished, for cement and pozzolan. No cement and pozzolan shall be used until notice of acceptance has been given. Cement and pozzolan may be subjected to check testing by the Government from samples obtained at the mill, at transfer points, or at the project site.

1.3 GENERAL REQUIREMENTS

Tolerances for concrete construction and materials shall be in accordance with ACI 117/117R.

1.3.1 Strength Requirements

Structural concrete for lightly loaded slab on grade shall have minimum 28-day compressive strength of 21 MPa. Structural concrete for slab on grade subjected to vehicle traffic shall have minimum 28-day compressive strength of 28 MPa.

1.3.2 Air Entrainment

For exterior concrete, air content by volume of concrete shall be maintained at 5 to 7 percent as determined in conformance with ASTM C 231. Interior concrete shall have 3 to 5 percent air content.

1.3.3 Special Properties

Concrete may contain other admixtures, such as water reducers, superplasticizers, or set retarding agents to provide special properties to the concrete, if approved.

1.3.4 Slump

Slump shall be within the following limits:

Structural Element	Slump in millimeters Minimum	Maximum
Walls, columns and beams	50	100
Foundation walls, substructure walls, footings, pavement, and slabs	25	75
Any structural concrete approved for placement by pumping	None	150

*Where use of superplasticizers are approved to produce flowing concrete these slump requirements do not apply.

1.3.5 Technical Service for Specialized Concrete

The service of a technical representative shall be obtained to oversee proportioning, batching, mixing, placing, consolidating and finishing of specialized structural concrete, such as lightweight or flowing concrete until field controls indicate concrete of specified quality is furnished.

1.4 PROPORTIONS OF MIX

1.4.1 Mixture Proportioning, Normal Weight Concrete

Trial batches shall contain materials proposed to be used in the project. Trial mixtures having proportions, consistencies and air content suitable for the work shall be made based on methodology described in ACI 211.1, using at least three different water-cement ratios. Trial mixes shall be proportioned to produce concrete strengths specified. Trial mixtures shall be designed for maximum permitted slump and air content. The temperature of concrete in each trial batch shall be reported. For each water-cement ratio at least three test cylinders or beams for each test age shall be made and cured in accordance with ASTM C 192. They shall be tested at 7 and 28 days in accordance with ASTM C 39. From these test results a curve shall be plotted showing the relationship between water-cement ratio and strength. For each strength of concrete the maximum allowable water-cement ratio shall be that shown by these curves to produce an average strength as specified in paragraph AVERAGE STRENGTH. Pozzolan shall be utilized and be proportioned by 15 to 35 percent by mass of cement replacement.

1.4.2 Average Strength

In meeting the strength requirements specified, the selected mixture proportion shall produce an average compressive strength exceeding the specified strength by the amount indicated below. Where a concrete production facility has test records, a standard deviation shall be established. Test records from which a standard deviation is calculated shall represent materials, quality control procedures, and conditions similar to those expected; shall represent concrete produced to meet a specified strength or strengths within 7 MPa of that specified for proposed work; and shall consist of at least 30 consecutive tests. A

strength test shall be the average of the strengths of two cylinders made from the same sample of concrete and tested at 28 days or at other test age designated for determination of the specified strength.

1.4.2.1 Test Records Exceeding 29

Required average compressive strength used as the basis for selection of concrete proportions shall be the larger of the specified strength plus the standard deviation multiplied by 1.34 or the specified strength plus the standard deviation multiplied by 2.33 minus 500.

1.4.2.2 Test Records Less Than 29

Where a concrete production facility does not have test records meeting the above requirements but does have a record based on 15 to 29 consecutive tests, a standard deviation may be established as the product of the calculated standard deviation and a modification factor from the following table:

No. of tests (1)	Modification factor for standard deviation
less than 15	See Note
15	1.16
20	1.08
25	1.03
30 or more	1.00

(1) Interpolate for intermediate numbers of tests.

When a concrete production facility does not have field strength test records for calculation of standard deviation or the number of tests is less than 15, the required average strength shall be:

a. The specified strength plus 7 specified strength of less than 21 MPa.

b. The specified strength plus 8 for specified strengths of 21 to 35 MPa.

1.5 STORAGE OF MATERIALS

Cement and pozzolan shall be stored in weathertight buildings, bins, or silos which will exclude moisture and contaminants. Aggregate stockpiles shall be arranged and used in a manner to avoid excessive segregation and to prevent contamination with other materials or with other sizes of aggregates. Reinforcing bars and accessories shall be stored above the ground on platforms, skids or other supports. Other materials shall be stored in such a manner as to avoid contamination and deterioration. Admixtures which have been in storage at the project site for longer than 6 months or which have been subjected to freezing shall not be used unless retested and proven to meet the specified requirements.

PART 2 PRODUCTS

2.1 ADMIXTURES

Admixtures shall conform to the following:

2.1.1 Accelerating Admixture

ASTM C 494, Type C or E.

2.1.2 Air-Entraining Admixture

ASTM C 260.

2.1.3 Flowing Concrete Admixture

ASTM C 1017, Type 1 or 2.

2.1.4 Water-Reducing or Retarding Admixture

ASTM C 494, Type A, B, D, F, or G. Type G admixture shall not be used for slabs-on-grade.

2.2 CEMENTITIOUS MATERIALS

Cementitious materials shall each be of one type and from one source when used in concrete which will have surfaces exposed in the finished structure. Cementitious materials shall conform to one of the following:

2.2.1 Cement

ASTM C 150, Type II, low alkali.

2.2.2 Portland-Pozzolan Cement

ASTM C 595, Type IP, low alkali.

2.2.3 Pozzolan

ASTM C 618, Class F. Loss on ignition shall not exceed 3.0 percent. Supplementary optional chemical requirements shall apply.

2.3 AGGREGATES

Aggregates shall conform to the following:

2.3.1 Normal Weight Aggregate

ASTM C 33. Grading requirement for coarse aggregate shall conform to size number 57. The maximum size aggregate shall be 25.4 mm (1 inches).

2.4 CURING MATERIALS

2.4.1 Burlap

FS CCC-C-467.

2.4.2 Impervious Sheets

ASTM C 171, type optional, except that polyethylene film, if used, shall be white opaque.

2.4.3 Membrane-Forming Compounds

ASTM C 309, Type 1-D, Class A or B.

2.5 WATER

Water shall be potable, except that nonpotable water may be used if it produces mortar cubes having 7- and 28-day strengths at least 90 percent of the strength of similar specimens made with water from a municipal supply. The strength comparison shall be made on mortars, identical except for mixing water, prepared and tested in accordance with ASTM C 109. Water for curing shall not contain any substance injurious to concrete, or which causes staining.

PART 3 EXECUTION

3.1 PREPARATION OF SURFACES

Surfaces to receive concrete shall be clean and free from frost, ice, mud, and water. Conduit and other similar items shall be in place and clean of any deleterious substance.

3.1.1 Foundations

Earthwork shall be as specified in Section 02221 EXCAVATION, FILLING, AND BACKFILLING FOR BUILDINGS. Flowing water shall be diverted without washing over freshly deposited concrete. Rock foundations shall be cleaned by high velocity air-water jets, sandblasting, or other approved methods. Debris and loose, semi-detached or unsound fragments shall be removed. Rock surfaces shall be moist but without free water when concrete is placed. Semiporous subgrades for foundations and footings shall be damp when concrete is placed. Pervious subgrades shall be sealed by blending impervious material with the top 150 mm of the in-place pervious material or by covering with an impervious membrane.

3.2 BATCHING, MIXING AND TRANSPORTING CONCRETE

Ready-mixed concrete shall be batched, mixed and transported in accordance with ASTM C 94, except as otherwise specified. Truck mixers, agitators, and nonagitating units shall comply with NRMCA TMMB-01. Ready-mix plant equipment and facilities shall be certified in accordance with NRMCA QC 3. Site-mixed concrete shall be mixed in accordance with ACI 301. On site plant shall conform to the NRMCA CPMB 100.

3.2.1 Admixtures

Admixtures shall be batched within an accuracy of 3 percent. Where two or more admixtures are used in the same batch, they shall be batched separately and must be compatible. Retarding admixture shall be added within one minute after addition of water is complete or in the first quarter of the required mixing time, whichever is first. Concrete that shows evidence of total collapse or segregation caused by the use of admixture shall be removed from the site.

3.2.2 Control of Mixing Water

No water from the truck system or elsewhere shall be added after the

initial introduction of mixing water for the batch except when on arrival at the jobsite, the slump of the concrete is less than that specified. Water added to bring the slump within the specified range shall not change the total water in the concrete to a point that the approved water-cement ratio is exceeded. The drum shall be turned an additional 30 revolutions, or more, if necessary, until the added water is uniformly mixed into the concrete. Water shall not be added to the batch at any later time.

3.3 SAMPLING AND TESTING

Sampling and Testing is the responsibility of the Contractor and shall be performed by an approved testing agency. All sampling, testing, recording and submittal of test results shall be in accordance with the Construction Control Manual.

3.3.1 Aggregates

Aggregates for normal weight concrete shall be sampled and tested in accordance with ASTM C 33. Gradation tests shall be performed on the first day and every other day thereafter during concrete construction.

3.3.2 Sampling of Concrete

Samples of concrete for air, slump, unit weight, and strength tests shall be taken in accordance with ASTM C 172

3.3.2.1 Air Content

Test for air content shall be performed in accordance with ASTM C 173 or ASTM C 231.

3.3.2.2 Slump

At least 2 slump tests shall be made on randomly selected batches of each mixture of concrete during each day's concrete placement. Tests shall be performed in accordance with ASTM C 143.

3.3.3 Evaluation and Acceptance of Concrete

3.3.3.1 Frequency of Testing

Samples for strength tests of each class of concrete placed each day shall be taken not less than once a day. Number and frequency of test speciments shall be in accordance with the Construction Control Manual. Field cured specimens for determining form removal time or when a structure may be put in service shall be made in numbers directed to check the adequacy of curing and protection of concrete in the structure. The specimens shall be removed from the molds at the age of 24 hours and shall be cured and protected, insofar as practicable, in the same manner as that given to the portion of the structure the samples represent.

3.3.3.2 Testing Procedures

Cylinders for acceptance tests shall be molded and cured in accordance with ASTM C 31. Cylinders shall be tested in accordance with ASTM C 39. A strength test shall be the average of the strengths of two cylinders or beams made from the same sample of concrete and tested at 28 days or at another specified test age.

3.3.3.3 Evaluation of Results

Concrete specified on the basis of compressive strength will be considered satisfactory if the averages of all sets of three consecutive strength test results equal or exceed the specified strength and no individual strength test result falls below the required strength by more than 3.4 MPa. If any of these requirements are not met, the Contracting Officer will require changes in the proportions of the concrete mix.

3.3.4 Investigation of Low-Strength Test Results

When any strength test of standard-cured test cylinder falls below the specified strength requirement by more than 3.4 MPa, or if tests of field-cured cylinders indicate deficiencies in protection and curing, steps shall be taken to assure that load-carrying capacity of the structure is not jeopardized. Nondestructive testing in accordance with ASTM C 597, ASTM C 803 or ASTM C 805 may be permitted by the Contracting Officer to determine the relative strengths at various locations in the structure as an aid in evaluating concrete strength in place or for selecting areas to be cored. Such tests, unless properly calibrated and correlated with other test data, shall not be used a basis for acceptance or rejection. When strength of concrete in place is considered potentially deficient, cores shall be obtained and tested in accordance with ASTM C 42. At least three representative cores shall be taken from each member or area of concrete in place that is considered potentially deficient. The location of cores shall be determined by the Contracting Officer to least impair the strength of the structure. If the concrete in the structure will be dry under service conditions, the cores shall be air dried (temperature 16 to 27 degrees C, relative humidity less than 60 percent) for seven days before testing and shall be tested dry. If the concrete in the structure will be more than superficially wet under service conditions, the cores shall be tested after moisture conditioning in accordance with ASTM C 42. Concrete in the area represented by the core testing will be considered adequate if the average strength of the cores is equal to or at least 85 percent of the specified strength requirement and if no single core is less than 75 percent of the specified strength requirement. If the core tests are inconclusive or impractical to obtain, or if structural analysis does not confirm the safety of the structure, load tests may be directed by the Contracting Officer in accordance with the requirements of ACI 318/318R. Concrete work evaluated by structural analysis or by results of a load test and found deficient shall be corrected in a manner satisfactory to the Contracting Officer. All investigations, testing, load tests, and correction of deficiencies shall be performed, and approved by the Contracting Officer, at the expense of the Contractor.

3.4 CONVEYING CONCRETE

Concrete shall be conveyed from mixer to forms as rapidly as possible and within the time interval specified in paragraph CONCRETE PLACEMENT by methods which will prevent segregation or loss of ingredients. Each load of concrete shall be visually inspected for slump conformance prior to entering the conveyance apparatus or forms. Inspections shall be made by a person who has been certified by the American Concrete Institute to perform such inspection. Concrete which appears to exceed the specified tolerance shall be slumped in accordance with ASTM C 143. Concrete which is determined to exceed the maximum allowable slump shall be returned to the batch plant and wasted at no additional cost to the Government. All slumps, both visual and physical, shall be recorded as required by the Construction Control Manual.

3.4.1 Chutes

When concrete can be placed directly from a truck mixer or other transporting equipment, chutes attached to this equipment may be used. Separate chutes will not be permitted except when specifically approved.

3.4.2 Buckets

Bucket design shall be such that concrete of the required slump can be readily discharged. Bucket gates shall be essentially grout tight when closed. The bucket shall provide means for positive regulations of the amount and rate of deposit of concrete in each dumping position.

3.4.3 Belt Conveyors

Belt conveyors may be used when approved. Belt conveyors shall be designed for conveying concrete and shall be operated to assure a uniform flow of concrete to the final place of deposit without segregation or loss of mortar. Conveyors shall be provided with positive means for preventing segregation of the concrete at transfer points and point of placement.

3.4.4 Pumps

Concrete may be conveyed by positive displacement pumps when approved. Pump shall be the piston or squeeze pressure type. Pipeline shall be steel pipe or heavy duty flexible hose. Inside diameter of the pipe shall be at least three times the maximum size of the coarse aggregate. Distance to be pumped shall not exceed the limits recommended by the pump manufacturer. Concrete shall be supplied to the pump continuously. When pumping is completed, the concrete remaining in the pipeline shall be ejected without contaminating the concrete in place. After each use, the equipment shall be thoroughly cleaned. Flushing water shall be wasted outside the forms.

3.5 CONCRETE PLACEMENT

Mixed concrete which is transported in truck mixers or agitators or concrete which is truck mixed, shall be discharged within 1-1/2 hours or before the drum has revolved 300 revolutions, whichever comes first after the introduction of the mixing water to the cement and aggregates or the introduction of the cement to the aggregates. These limitations may be waived by the Government if the concrete is of such slump after the 1-1/2 hour time or 300 revolution limit has been reached that it can be placed, without the addition of water to the batch. When the concrete temperature exceeds 29 degrees C, the time shall be reduced to 45 minutes. Concrete shall be placed within 15 minutes after it has been discharged from the truck.

3.5.1 Placing Operation

Concrete shall be handled from mixer to forms in a continuous manner until the approved unit of operation is completed. Adequate scaffolding, ramps and walkways shall be provided so that personnel and equipment are not supported by in-place reinforcement. Placing will not be permitted when the sun, heat, wind, or limitations of facilities furnished by the Contractor prevent proper consolidation, finishing and curing. Concrete shall be deposited as close as possible to its final position in the forms, and there shall be no vertical drop greater than 2.5 m except where suitable equipment is provided to prevent segregation and where

specifically authorized. Depositing of the concrete shall be so regulated that it will be effectively consolidated in horizontal layers not more than 300 mm thick, except that all slabs shall be placed in a single layer. Concrete to receive other construction shall be screeded to the proper level to avoid excessive shimming or grouting.

3.5.2 Consolidation

Immediately after placing, each layer of concrete shall be consolidated by internal vibrators, except for slabs 100 mm or less. The vibrators shall at all times be adequate in effectiveness and number to properly consolidate the concrete; a spare vibrator shall be kept at the jobsite during all concrete placing operations. The vibrators shall have a frequency of not less than 8000 vibrations per minute, and the head diameter and amplitude shall be appropriate for the concrete mixture being placed. Vibrators shall be inserted vertically at uniform spacing over the area of placement. The distance between insertions shall be approximately 1-1/2 times the radius of action of the vibrator so that the area being vibrated will overlap the adjacent just-vibrated area by a few inches. The vibrator shall penetrate rapidly to the bottom of the layer and at least 150 mm into the preceding layer if there is such. Vibrator shall be held stationary until the concrete is consolidated and then withdrawn slowly. The use of form vibrators must be specifically approved. Vibrators shall not be used to transport concrete within the forms. Slabs 100 mm and less in thickness shall be consolidated by properly designed vibrating screeds or other approved technique.

3.5.3 Cold Weather Requirements

Special protection measures, approved by the Contracting Officer, shall be used if freezing temperatures are anticipated before the expiration of the specified curing period. The ambient temperature of the air where concrete is to be placed and the temperature of surfaces to receive concrete shall be not less than 4 degrees C. The temperature of the concrete when placed shall be not less than 10 degrees C nor more than 24 degrees C. Heating of the mixing water or aggregates will be required to regulate the concrete placing temperature. Materials entering the mixer shall be free from ice, snow, or frozen lumps. Salt, chemicals or other materials shall not be incorporated in the concrete to prevent freezing. Upon written approval, calcium chloride or chemical admixture conforming to ASTM C 494 Type C or E may be used. Any concrete damaged by inadequate protection or procedure shall be removed and replaced at no additional cost to the government.

3.5.4 Warm Weather Requirements

The temperature of the concrete placed during warm weather shall not exceed 30 degrees C except where an approved retarder is used. The mixing water and/or aggregates shall be cooled, if necessary, to maintain a satisfactory placing temperature. In no case shall the placing temperature exceed 35 degrees C.

3.6 CONSTRUCTION JOINTS

Construction joints shall be located as indicated or approved. Where concrete work is interrupted by weather, end of work shift or other similar type of delay, location and type of construction joint shall be subject to approval of the Contracting Officer. Unless otherwise indicated and except for slabs on grade, reinforcing steel shall extend through construction joints. Construction joints in slabs on grade shall be keyed or doweled as

shown. Concrete columns, walls, or piers shall be in place at least 2 hours, or until the concrete is no longer plastic, before placing concrete for beams, girders, or slabs thereon. In walls having door window openings, lifts shall terminate at the top and bottom of the opening. Other lifts shall terminate at such levels as to conform to structural requirements or architectural details. Where horizontal construction joints are required, a strip of 25.4 mm (1 inch) square-edge lumber, bevelled and oiled to facilitate removal, shall be tacked to the inside of the forms at the construction joint. Concrete shall be placed to a point 25 mm above the underside of the strip. The strip shall be removed 1 hour after the concrete has been placed, and any irregularities in the joint line shall be leveled off with a wood float, and all laitance shall be removed. Prior to placing additional concrete, horizontal construction joints shall be prepared as specified in paragraph PREPARATIONS OF SURFACES.

3.7 FINISHING CONCRETE

3.7.1 Formed Surfaces

3.7.1.1 Repair of Surface Defects

Surface defects shall be repaired within 24 hours after the removal of forms. Honeycombed and other defective areas shall be cut back to solid concrete or to a depth of not less than 25 mm, whichever is greater. Edges shall be cut perpendicular to the surface of the concrete. The prepared areas shall be dampened and brush-coated with neat cement grout. The repair shall be made using mortar consisting of not more than 1 part cement to 2-1/2 parts sand. The mixed mortar shall be allowed to stand to stiffen (approximately 45 minutes), during which time the mortar shall be intermittently remixed without the addition of water. After the mortar has attained the stiffest consistency that will permit placing, the patching mix shall be thoroughly tamped into place by means approved by the Contracting Officer and finished slightly higher than the surrounding surface. For Class B finished surfaces the cement used in the patching mortar shall be a blend of job cement and white cement proportioned to produce a finished repair surface matching, after curing, the color of adjacent surfaces. Holes left after the removal of form ties shall be cleaned and filled with patching mortar. Holes left by the removal of tie rods shall be reamed and filled by dry-packing. Repaired surfaces shall be cured as required for adjacent surfaces. The temperature of concrete, mortar patching material, and ambient air shall be above 10 degrees C while making repairs and during the curing period. Concrete with defects which affect the strength of the member or with excessive honeycombs will be rejected, or the defects shall be corrected as directed.

3.7.1.2 Class B Finish

Where a Class B finish is indicated, fins shall be removed. Concrete surface shall be smooth with a texture at least equal to that obtained through the use of Grade B-B plywood forms.

3.7.1.3 Class C Finish

Where a Class C finish is indicated, fins shall be removed. Concrete surfaces shall be relatively smooth with a texture imparted by the forms used.

3.7.1.4 Class D Finish

Where a Class D finish is indicated, fins exceeding 6 mm in height shall be chipped or rubbed off. Concrete surfaces shall be left with the texture imparted by the forms used.

3.7.2 Unformed Surfaces

In cold weather, the air temperature in areas where concrete is being finished shall not be less than 10 degrees C. In hot windy weather when the rate of evaporation of surface moisture, as determined by methodology presented in ACI 305R, may reasonably be expected to exceed 1 kg per square meter per hour (0.2 per square foot per hour); coverings, windbreaks, or fog sprays shall be provided as necessary to prevent premature setting and drying of the surface. The dusting of surfaces with dry materials or the addition of water during finishing will not be permitted. Finished surfaces shall be plane, with no deviation greater than 8 mm (5/16 inch) when tested with a 3.05 m (10 foot) straightedge. Floor tolerance measurements shall be made as soon as possible after finishing. When forms or shoring are used the measurements shall be made prior to their removal. Surfaces shall be pitched to drains.

3.7.2.1 Rough-Slab Finish

Slabs to receive fill or mortar setting beds shall be screeded with straightedges immediately after consolidation to bring the surface to the required finish level with no coarse aggregate visible.

3.7.2.2 Float Finish

Slabs to receive a steel trowel finish shall be given a float finish. Screeding shall be followed immediately by darbying or bull floating before bleeding water is present, to bring the surface to a true, even plane. After the concrete has stiffened to permit the operation and the water sheen has disappeared, it shall be wood floated. Concrete that portrays stickiness shall be finished with a magnesium float in lieu of a wood float, and left free of ridges and other projections. Float finish is normally specified for surfaces that will receive other treatment such as built-up roofing, nonslip surfacing material or other types of dry-shake surface. It should not be specified as a wearing surface.

3.7.2.3 Trowel Finish

Slabs shall be given a trowel finish immediately following floating. Surfaces shall be trowelled to produce smooth, dense slabs free from blemishes including trowel marks. In lieu of hand finishing, an approved power finishing machine may be used in accordance with the directions of the machine manufacturer. A final hard steel troweling shall be done by hand. Trowel finish will be specified for most wearing surfaces and where a smooth finish is required.

3.7.2.4 Broom Finish

After floating, slabs, where indicated, shall be lightly trowelled, and then broomed with a fiber-bristle brush in a direction transverse to that of the main traffic.

3.8 CURING AND PROTECTION

3.8.1 General

All concrete shall be cured by an approved method for the period of time given below:

Concrete with Type II cement blended with pozzolan	7 days

Immediately after placement, concrete shall be protected from premature drying extremes in temperatures, rapid temperature change, mechanical injury and injury from rain and flowing water. Air and forms in contact with concrete shall be maintained at a temperature above 10 degrees C for the first 3 days and at a temperature above 0 degrees C for the remainder of the specified curing period. Exhaust fumes from combustion heating units shall be vented to the outside of the enclosure and heaters and ducts shall be placed and directed so as not to cause areas of overheating and drying of concrete surfaces or to create fire hazards. All materials and equipment needed for adequate curing and protection shall be available and at the site prior to placing concrete. No fire or excessive heat shall be permitted near or in direct contact with the concrete at any time. Curing shall be accomplished by any of the following methods, or combination thereof, as approved, except that all slabs shall be moist cured for the first 24 hours.

3.8.2 Moist Curing

Concrete to be moist-cured shall be maintained continuously wet for the entire curing period. If water or curing materials used stains or discolors concrete surfaces which are to be permanently exposed, the concrete surfaces shall be cleaned. When wooden forms are left in place during curing, they shall be kept wet at all times. If the forms are removed before the end of the curing period, curing shall be carried out as on unformed surfaces, using suitable materials. Horizontal surfaces shall be cured by ponding, by covering with a 50 mm minimum thickness of continuously saturated sand, or by covering with waterproof paper, polyethylene sheet, polyethylene-coated burlap or saturated burlap.

3.8.3 Membrane Curing

Membrane curing shall not be used on surfaces that are to receive any subsequent treatment depending on adhesion or bonding to the concrete; except a styrene acrylate or chlorinated rubber compound meeting ASTM C 309, Class B requirements may be used for surfaces which are to be painted or are to receive bituminous roofing or waterproofing, or floors that are to receive adhesive applications of resilient flooring. The curing compound selected shall be compatible with any subsequent paint, roofing, waterproofing or flooring specified. Membrane curing compound shall not be used on surfaces that are maintained at curing temperatures with free steam. Curing compound shall be applied to formed surfaces immediately after the forms are removed and prior to any patching or other surface treatment except the cleaning of loose sand, mortar, and debris from the surface. Surfaces shall be thoroughly moistened with water and the curing compound shall be applied to slab surfaces as soon as the bleeding water has disappeared, with the tops of joints being temporarily sealed to prevent entry of the compound and to prevent moisture loss during the curing period. Compound shall be applied in a one-coat continuous operation by mechanical spraying equipment, at a uniform coverage in accordance with the manufacturer's printed instructions. Concrete surfaces which have been subjected to rainfall within 3 hours after curing compound has been applied shall be resprayed by the method and at the coverage specified. On surfaces permanently exposed to view, the surface shall be shaded from direct rays of the sun for the duration of the curing period. Surfaces coated with curing compound shall be kept free of foot and

vehicular traffic, and from other sources of abrasion and contamination during the curing period.

3.9 SETTING BASE PLATES AND BEARING PLATES

After being properly positioned, column base plates, bearing plates for beams and similar structural members, and machinery and equipment base plates shall be set to the proper line and elevation with damp-pack bedding mortar, except where nonshrink grout is indicated. The thickness of the mortar or grout shall be approximately 1/24 the width of the plate, but not less than 20 mm. Concrete and metal surfaces in contact with grout shall be clean and free of oil and grease, and concrete surfaces in contact with grout shall be damp and free of laitance when grout is placed.

3.9.1 Damp-Pack Bedding Mortar

Damp-pack bedding mortar shall consist of 1 part cement and 2-1/2 parts fine aggregate having water content such that a mass of mortar tightly squeezed in the hand will retain its shape but will crumble when disturbed. The space between the top of the concrete and bottom of the bearing plate or base shall be packed with the bedding mortar by tamping or ramming with a bar or rod until it is completely filled.

3.9.2 Nonshrink Grout

Nonshrink grout shall be mixed and placed in accordance with material manufacturer's written recommendations. Forms of wood or other suitable material shall be used to retain the grout. The grout shall be placed quickly and continuously, completely filling the space without segregation or bleeding of the mix.

3.10 CONSTRUCTION QUALITY CONTROL

Attention is directed to SECTION: CONSTRUCTION QUALITY CONTROL which requires the Contractor to perform quality control inspection, testing, and reporting.

-- End of Section --

SECTION TABLE OF CONTENTS

DIVISION 05 - METALS

SECTION 05500

MISCELLANEOUS METAL

PART 1 GENERAL

1.1 REFERENCES
1.2 SUBMITTALS
1.3 GENERAL REQUIREMENTS
1.4 DISSIMILAR MATERIALS
1.5 WORKMANSHIP
1.6 ANCHORAGE
1.7 ALUMINUM FINISHES
1.8 SHOP PAINTING

PART 2 PRODUCTS

2.1 FIRE EXTINGUISHER CABINETS
2.2 MISCELLANEOUS
2.3 WINDOW GUARDS, DIAMOND MESH TYPE

PART 3 EXECUTION

3.1 GENERAL INSTALLATION REQUIREMENTS
3.2 DIAMOND MESH WINDOW GUARDS

-- End of Section Table of Contents --

SECTION 05500

MISCELLANEOUS METAL

PART 1 GENERAL

1.1 REFERENCES

The publications listed below form a part of this specification to the extent referenced. The publications are referred to in the text by basic designation only.

ALUMINUM ASSOCIATION (AA)

AA DAF-45	(1980; R 1993) Designation System for Aluminum Finishes

AMERICAN SOCIETY FOR TESTING AND MATERIALS (ASTM)

ASTM A 123	(1989a) Zinc (Hot-Dip Galvanized) Coatings on Iron and Steel Products
ASTM A 653	(1996) Steel Sheet, Zinc-Coated (Galvanized) or Zinc-Iron Alloy-Coated (Galvannealed) by the Hot-Dip Process
ASTM A 924	(1996a) Steel Sheet, Metallic-Coated by the Hot-Dip Process

AMERICAN WELDING SOCIETY (AWS)

AWS D1.1	(1994) Structural Welding Code - Steel

1.2 SUBMITTALS

Government approval is required for submittals with a "GA" designation; submittals having an "FIO" designation are for information only. The following shall be submitted in accordance with Section 01330 SUBMITTAL PROCEDURES:

SD-04 Drawings

Miscellaneous Metal Items; FIO.

Detail drawings indicating material thickness, type, grade, and class; dimensions; and construction details. Drawings shall include catalog cuts,

erection details, manufacturer's descriptive data and installation instructions, and templates.

1.3 GENERAL REQUIREMENTS

The Contractor shall verify all measurements and shall take all field measurements necessary before fabrication. Welding to or on structural steel shall be in accordance with AWS D1.1. Items specified to be galvanized, when practicable and not indicated otherwise, shall be hot-dip galvanized after fabrication. Galvanizing shall be in accordance with ASTM A 123, ASTM A 653, or ASTM A 924, as applicable. Exposed fastenings shall be compatible materials, shall generally match in color and finish, and shall harmonize with the material to which fastenings are applied. Materials and parts necessary to complete each item, even though such work is not definitely shown or specified, shall be included. Poor matching of holes for fasteners shall be cause for rejection. Fastenings shall be concealed where practicable. Thickness of metal and details of assembly and supports shall provide strength and stiffness. Joints exposed to the weather shall be formed to exclude water.

1.4 DISSIMILAR MATERIALS

Where dissimilar metals are in contact, or where aluminum is in contact with concrete, mortar, masonry, wet or pressure-treated wood, or absorptive materials subject to wetting, the surfaces shall be protected with a coat of bituminous paint or asphalt varnish.

1.5 WORKMANSHIP

Miscellaneous metalwork shall be well formed to shape and size, with sharp lines and angles and true curves. Drilling and punching shall produce clean true lines and surfaces. Welding shall be continuous along the entire area of contact except where tack welding is permitted. Exposed connections of work in place shall not be tack welded. Exposed welds shall be ground smooth. Exposed surfaces of work in place shall have a smooth finish, and unless otherwise approved, exposed riveting shall be flush. Where tight fits are required, joints shall be milled. Corner joints shall be coped or mitered, well formed, and in true alignment. Work shall be accurately set to established lines and elevations and securely fastened in place. Installation shall be in accordance with manufacturer's installation instructions and approved drawings, cuts, and details.

1.6 ANCHORAGE

Anchorage shall be provided where necessary for fastening miscellaneous metal items securely in place. Anchorage not otherwise specified or indicated shall include slotted inserts made to engage with the anchors, expansion shields, and power-driven fasteners when approved for concrete; toggle bolts and through bolts for masonry; machine and carriage bolts for steel; and lag bolts and screws for wood.

1.7 ALUMINUM FINISHES

Unless otherwise specified, aluminum items shall have standard mill finish. The thickness of the coating shall be not less than that specified for protective and decorative type finishes for items used in interior locations or architectural Class I type finish for items used in exterior

locations in AA DAF-45. Items to be anodized shall receive a polished satin finish.

1.8 SHOP PAINTING

Surfaces of ferrous metal except galvanized surfaces, shall be cleaned and shop coated with the manufacturer's standard protective coating unless otherwise specified. Surfaces of items to be embedded in concrete shall not be painted. Items to be finish painted shall be prepared according to manufacturer's recommendations or as specified.

PART 2 PRODUCTS

2.1 FIRE EXTINGUISHER CABINETS

Fire extinguisher cabinets shall be sized to hold 9.5 L portable pressurized water fire extinguishers. Cabinets shall be surface mounted and recessed, see drawings. Cabinet box shall be 1.3 mm steel with a baked enamel finish. Steel door and trim shall be one-piece construction with a continuous hinge. Trim shall be rolled edge and finished in red baked enamel. Door shall be 16 mm thick, one-piece hollow steel, full glazed steel frame with rubber roller catch and satin finish door handle, and have a red baked enamel finish.

2.2 MISCELLANEOUS

Miscellaneous plates and shapes for items that do not form a part of the structural steel framework, such as lintels, sill angles, miscellaneous mountings, and frames, shall be provided to complete the work.

2.3 WINDOW GUARDS, DIAMOND MESH TYPE

Diamond mesh window guards shall be constructed of woven steel wire. Woven-wire panels shall be of 10 gauge, 38 mm mesh secured through weaving bar to 10 mm round or 25 mm channel frame. Corners of frames shall be mitered and welded or mortised and tenoned.

PART 3 EXECUTION

3.1 GENERAL INSTALLATION REQUIREMENTS

All items shall be installed at the locations shown and according to the manufacturer's recommendations. Items listed below require additional procedures as specified.

3.2 DIAMOND MESH WINDOW GUARDS

Diamond mesh window guards shall be mounted on exterior of window frame with 7mm prison - type screws.

-- End of Section --

SECTION TABLE OF CONTENTS

DIVISION 06 - WOODS & PLASTICS

SECTION 06100

ROUGH CARPENTRY

PART 1 GENERAL

1.1 SUBMITTALS
1.2 DELIVERY AND STORAGE

PART 2 PRODUCTS

2.1 INSULATION
2.1.1 Batt or Blanket
2.1.1.1 Glass Fiber Batts and Rolls
2.1.1.2 Mineral Fiber Batt

PART 3 EXECUTION

3.1 INSTALLATION OF INSULATION

-- End of Section Table of Contents --

SECTION 06100

ROUGH CARPENTRY

PART 1 GENERAL

1.1 SUBMITTALS

Government approval is required for submittals with a "GA" designation; submittals having an "FIO" designation are for information only. The following shall be submitted in accordance with Section 01330 SUBMITTAL PROCEDURES:

Insulation; FIO.

Certificate attesting that the glass and mineral fiber, insulation furnished for the project contains recovered material, and showing an estimated percent of such recovered material.

1.2 DELIVERY AND STORAGE

Materials shall be delivered to the site in undamaged condition, stored off ground in fully covered, well ventilated areas, and protected from extreme changes in temperature and humidity.

PART 2 PRODUCTS

2.1 INSULATION

Thermal resistance of insulation shall be not less than the Rsi-values shown. Rsi-values shall be determined at 24 degrees C in accordance with ASTM C 518. Insulation shall contain the highest practicable percentage of recovered material which has been recovered or diverted from solid waste, but not including material reused in a manufacturing process. Where two materials have the same price and performance, the one containing the higher recovered material content shall be provided. Insulation shall be the standard product of a manufacturer and factory marked or identified with manufacturer's name or trademark and R-value. Identification shall be on individual pieces or individual packages. Materials containing more than one percent asbestos will not be allowed.

2.1.1 Batt or Blanket

2.1.1.1 Glass Fiber Batts and Rolls

Glass fiber batts and rolls shall conform to ASTM C 665, Type III foil faced insulation, Class A, having a UL rating of 50 and a smoke developed rating of 150 or less when tested in accordance with ASTM E 84.

Insulation shall have a 0.25 mm (10 mil) thick, white, puncture resistant woven-glass cloth with vinyl facing on one side. Width and length shall suit construction conditions.

2.1.1.2 Mineral Fiber Batt

Mineral fiber batt shall conform to ASTM C 665, Type I unfaced insulation.

PART 3 EXECUTION

3.1 INSTALLATION OF INSULATION

Insulation shall be installed after construction has advanced to a point that the installed insulation will not be damaged by remaining work. For thermal insulation the actual installed thickness shall provide the thermal resistance shown. Insulation shall be installed on the weather side of such items as electrical boxes and water lines. Unless otherwise specified, installation shall be in accordance with the manufacturer's recommendation.

-- End of Section --

SECTION TABLE OF CONTENTS

DIVISION 06 - WOODS & PLASTICS

SECTION 06200

FINISH CARPENTRY

PART 1 GENERAL

1.1 REFERENCES
1.2 SUBMITTALS
1.3 DELIVERY AND STORAGE

PART 2 PRODUCTS

2.1 Kerfed Surrounds
2.1.1 Grading and Marking
2.1.2 Sizes and Patterns
2.1.3 Moisture Content
2.1.4 Kerfed Surrounds
2.2 NAILS

PART 3 EXECUTION

3.1 KERFED SURROUNDS

-- End of Section Table of Contents --

SECTION 06200

FINISH CARPENTRY

PART 1 GENERAL

1.1 REFERENCES

The publications listed below form a part of this specification to the extent referenced. The publications are referred to in the text by basic designation only.

AMERICAN SOCIETY FOR TESTING AND MATERIALS (ASTM)

ASTM F 547	(1977; R 1990) Definitions of Terms Relating to Nails for Use with Wood and Wood-Base Materials

NORTHEASTERN LUMBER MANUFACTURERS ASSOCIATION (NELMA)

NELMA-01	(1993) Standard Grading Rules for Northeastern Lumber

SOUTHERN CYPRESS MANUFACTURER'S ASSOCIATION (SCMA)

SCMA-01	(1986; Supple No. 1, Aug 1993) Standard Specifications for Grades of Southern Cypress

SOUTHERN PINE INSPECTION BUREAU (SPIB)

SPIB-1001	(1994) Standard Grading Rules for Southern Pine Lumber

WEST COAST LUMBER INSPECTION BUREAU (WCLIB)

WCLIB Std 17	(1993; Supples III (A), V (A), & VI (A)) Grading Rules For West Coast Lumber

WESTERN WOOD PRODUCTS ASSOCIATION (WWPA)

WWPA-01	(1995; Supple Nos. 1, 2, and 3)Western Lumber Grading Rules 95

1.2 SUBMITTALS

Government approval is required for submittals with a "GA" designation; submittals having an "FIO" designation are for information only. The following shall be submitted in accordance with Section 01330 SUBMITTAL PROCEDURES:

SD-04 Drawings

Finish Carpentry; FIO.

Drawings shall indicate materials and details of construction, methods of fastening, erection, and installation.

SD-14 Samples

Kerfed Sills; FIO.

Samples shall be of sufficient size to show patterns, color ranges, and types, as applicable, of the material proposed to be used.

1.3 DELIVERY AND STORAGE

Materials shall be delivered to the site in undamaged condition, stored off ground in fully covered, well-ventilated areas, and protected from extreme changes in temperature and humidity.

PART 2 PRODUCTS

2.1 Kerfed Surrounds

The Contractor shall furnish products which optimize design by reducing the amount of wood used (engineered wood), or recycled wood products, and preservatives without arsenic or chromium when the products and methods are competitive in price or directed by the Contracting Officer.

2.1.1 Grading and Marking

Materials shall bear the grademark, stamp or other identifying marks indicating grades of material and rules or standards under which produced. Such identifying marks on a material shall be in accordance with the rule or standard under which the material is produced, including requirements for qualifications and authority of the inspection organization, usage of authorized identification, and information included in the identification. The inspection agency for lumber shall be certified by the Board of Review, American Lumber Standards Committee, to grade the species used. Bundle marking will be permitted in lieu of marking each individual piece. Surfaces that are to be architecturally exposed to view shall not bear grademarks, stamps, or other types of identifying marks.

2.1.2 Sizes and Patterns

Lumber sizes and patterns shall conform to rules or standards under which produced. Sizes and patterns for materials other than lumber shall conform to requirements of the rules or standards under which produced. Size references, unless otherwise specified, are nominal sizes, and actual sizes shall be within manufacturing tolerances allowed by the standard under

which the product is produced.

2.1.3 Moisture Content

The maximum moisture content of untreated kerf surounds shall be 15 percent at the time of delivery to the jobsite and when installed. Moisture content of all other material shall be in accordance with the standard under which the product is produced.

2.1.4 Kerfed Surrounds

Kerfed surrounds shall be of the pattern indicated and shall be of a grade compatible with the finish specified.

2.2 NAILS

Nails shall be the size and type best suited for the purpose and shall conform to ASTM F 547. Screws for use where nailing is impractical shall be size best suited for purpose.

PART 3 EXECUTION

3.1 KERFED SURROUNDS

Kerfed surrounds shall be installed straight, plumb, level and with closely fitted joints. Exposed surfaces shall be machine sanded at the mill. Kerfed surroundsshall be provided in single lengths. Blind nailing shall be used to the extent practicable, and face nailing shall be set and stopped with a nonstaining putty to match the finish applied. Screws shall be used for attachment to metal; setting and stopping of screws shall be of the same quality as required where nails are used.

TABLE I. SPECIES AND GRADE TABLES

Grading Rules	Species	Choice	Clear	C Select	C & Better
NELMA-01	Eastern Cedar			X	
	Eastern Hemlock		X		
	Tamarack				X
	Eastern W. Pine				X
	Northern Pine				X
	Eastern Spruce			X	
	Balsam Fir		X		
CRA-01	Redwood			X	
SCMA-01	Cypress				X
SPIB-1001	Southern Pine	X			
WCLIB Std 17	Douglas Fir	X			
	Larch				X
	Hemlock Fir				X
	Mountain Hemlock				X
	Sitka Spruce				X
WWPA-01	Douglas Fir				X
	Larch				X
	Hemlock Fir		X		
	Mountain Hemlock				X
	Western Larch		X		
	Idaho White Pine	X			
	Lodgepole Pine		X		
	Ponderosa Pine		X		
	Sugar Pine		X		
	Englemann Spruce		X		
	Douglas Fir South		X		
	Subalpine Fir		X		

NOTE 1: Western Cedar under WCLIB Std 17 shall be Grade B; and under WWPA-01, Western Cedar shall be Grade B bevel for siding and Grade A for trim.

NOTE 2: Except as specified in NOTE 3 below, siding and exterior trim shall be any of the species listed above. Interior trim shall be any one of the species listed above and the highest grade of the species for stain or natural finish and one grade below highest grade of species for paint finish.

NOTE 3: Southern Yellow Pine, Douglas Fir, Larch, Western Larch, and Tamarack shall not be used where painting is required and may be used on exterior work only when approved and stained with a preservative type stain.

-- End of Section --

SECTION TABLE OF CONTENTS

DIVISION 07 - THERMAL & MOISTURE PROTECTION

SECTION 07270

FIRESTOPPING

PART 1 GENERAL

1.1 REFERENCES
1.2 SUBMITTALS
1.3 GENERAL REQUIREMENTS
1.4 STORAGE AND DELIVERY
1.5 INSTALLER QUALIFICATIONS

PART 2 PRODUCTS

2.1 FIRESTOPPING MATERIALS
2.1.1 Fire Hazard Classification
2.1.2 Toxicity
2.1.3 Fire Resistance Rating
2.1.3.1 Through-Penetrations

PART 3 EXECUTION

3.1 PREPARATION
3.2 INSTALLATION
3.3 INSPECTION

-- End of Section Table of Contents --

SECTION 07270

FIRESTOPPING

PART 1 GENERAL

1.1 REFERENCES

The publications listed below form a part of this specification to the extent referenced. The publications are referred to in the text by basic designation only.

AMERICAN SOCIETY FOR TESTING AND MATERIALS (ASTM)

ASTM E 84	(1995a) Surface Burning Characteristics of Building Materials
ASTM E 814	(1994b) Fire Tests of Through-Penetration Fire Stops

UNDERWRITERS LABORATORIES (UL)

UL-05	(1995; Supple) Fire Resistance Directory
UL 723	(1993; Rev Apr 1994) Test for Surface Burning Characteristics of Building Materials
UL 1479	(1994) Fire Tests of Through-Penetration Firestops

1.2 SUBMITTALS

Government approval is required for submittals with a "GA" designation; submittals having an "FIO" designation are for information only. The following shall be submitted in accordance with Section 01330 SUBMITTAL PROCEDURES:

SD-04 Drawings

Firestopping Materials; FIO.

Detail drawings including manufacturer's descriptive data, typical details, installation instructions and the fire-test data and/or report as appropriate for the fire resistance rated construction and location. Submittal shall indicate the firestopping material to be provided for each type of application. When more than 5 penetrations are to receive firestopping, drawings shall indicate location and type of application.

SD-13 Certificates

Firestopping Materials; FIO.

Certificates attesting that firestopping material complies with the specified requirements. The label or listing of the Underwriters

Laboratories will be acceptable evidence. In lieu of the label or listing, a written certificate may be submitted from an approved, nationally recognized testing agency equipped to perform such services, stating that the items have been tested and conform to the specified requirements and testing methods.

Installer Qualifications; FIO.

Certification stating that installer is qualified and trained to install the specified firestopping material.

Inspection; FIO.

Manufacturer's representative certification stating that firestopping work has been inspected and found to be applied according to the manufacturer's recommendations and the specified requirements.

1.3 GENERAL REQUIREMENTS

Firestopping shall consist of furnishing and installing a material or a combination of materials to form an effective barrier against the spread of flame, smoke and gases, and maintain the integrity of fire resistance rated partitions, including through-penetrations. Through-penetrations include the annular space around pipes, tubes, conduit, wires, cables and vents.

1.4 STORAGE AND DELIVERY

Materials shall be delivered in the original unopened packages or containers showing name of the manufacturer and the brand name. Materials shall be stored off the ground and shall be protected from damage and exposure to elements. Damaged or deteriorated materials shall be removed from the site.

1.5 INSTALLER QUALIFICATIONS

Installer of firestopping material shall be trained by the manufacturer or the manufacturer's representative, and shall have a minimum of 3 years experience in the installation of firestopping of the type specified.

PART 2 PRODUCTS

2.1 FIRESTOPPING MATERIALS

Firestopping materials shall consist of commercially manufactured products complying with the following minimum requirements:

2.1.1 Fire Hazard Classification

Material shall have a flame spread of 25 or less, and a smoke developed rating of 50 or less, when tested in accordance with ASTM E 84 or UL 723. Material shall be an approved firestopping material as listed in UL-05.

2.1.2 Toxicity

Material shall be nontoxic to humans at all stages of application.

2.1.3 Fire Resistance Rating

Firestopping will not be required to have a greater fire resistance rating

than that of the assembly in which it is being placed.

2.1.3.1 Through-Penetrations

Firestopping materials for through-penetrations, as described in paragraph GENERAL REQUIREMENTS, shall provide "F" and "T" fire resistance ratings in accordance with ASTM E 814 or UL 1479, except that T Ratings are not required for penetrations smaller than or equal to a 100 mm nominal pipe or 0.01 square meter in overall cross sectional area. Fire resistance ratings shall be the following:

a. Penetrations of Fire Resistance Rated Partitions: F Rating = 1 hour, T Rating = 1 hour.

PART 3 EXECUTION

3.1 PREPARATION

Areas to receive firestopping shall be free of dirt, grease, oil, or loose materials which may affect the fitting or fire resistance of the firestopping system.

3.2 INSTALLATION

Firestopping material shall completely fill void spaces regardless of geometric configuration, subject to tolerance established by the manufacturer. Firestopping shall be installed in accordance with manufacturer's written instructions. Firestopping shall be provided in the following locations, except in floor slabs on grade:

a. Penetrations of duct, conduit, tubing, cable and through fire-resistance rated partitions.

b. Penetrations of vertical shafts such as pipe chases, and utility chutes.

c. Gaps at perimeter of fire-resistance rated partitions, such as between the top of the walls and the bottom of roof decks.

d. Other locations where required to maintain fire resistance rating of the construction.

3.3 INSPECTION

Firestopped areas shall not be covered or enclosed until inspection is complete and approved. A manufacturer's representative shall inspect the applications initially to ensure adequate preparations (clean surfaces suitable for application, etc.) and periodically during the work to assure that the completed work has been accomplished according to the manufacturer's written instructions and the specified requirements.

-- End of Section --

SECTION TABLE OF CONTENTS

DIVISION 07 - THERMAL & MOISTURE PROTECTION

SECTION 07416

STRUCTURAL STANDING SEAM METAL ROOF (SSSMR) SYSTEM

PART 1 GENERAL

1.1 REFERENCES
1.2 GENERAL REQUIREMENTS
1.2.1 Manufacturer
1.2.2 Installer
1.3 DESIGN REQUIREMENTS
1.3.1 Design Criteria
1.3.2 Dead Loads
1.3.3 Live Loads
1.3.3.1 Concentrated Loads
1.3.3.2 Uniform Loads
1.3.4 Roof Snow Loads
1.3.5 Wind Loads
1.3.6 Thermal Loads
1.3.7 Framing Members Supporting the SSSMR System
1.3.8 Roof Panels Design
1.3.9 Accessories and Their Fasteners
1.4 PERFORMANCE REQUIREMENTS
1.5 SUBMITTALS
1.6 DELIVERY AND STORAGE
1.7 WARRANTIES
1.7.1 Contractor's Weathertightness Warranty
1.7.2 Manufacturer's Material Warranties.

PART 2 PRODUCTS

2.1 ROOF PANELS
2.1.1 Steel Panels
2.1.2 Aluminum Panels
2.2 CONCEALED ANCHOR CLIPS
2.3 ACCESSORIES
2.4 FASTENERS
2.5 SUBPURLINS
2.6 FACTORY COLOR FINISH
2.7 SEALANT
2.8 GASKETS AND INSULATING COMPOUNDS
2.9 EPDM RUBBER BOOTS

PART 3 EXECUTION

3.1 INSTALLATION
3.1.1 Field Forming of Panels
3.1.2 Subpurlins
3.1.3 Roof Panel Installation
3.1.4 Concealed Anchor Clips
3.2 CLEANING AND TOUCH-UP

-- End of Section Table of Contents --

SECTION 07416

STRUCTURAL STANDING SEAM METAL ROOF (SSSMR) SYSTEM

PART 1 GENERAL

1.1 REFERENCES

The publications listed below form a part of this specification to the extent referenced. The publications are referred to in the text by basic designation only.

ALUMINUM ASSOCIATION (AA)

AA-02	(1994) Aluminum Design Manual: Specifications and Guidelines for Aluminum Structures

AMERICAN IRON AND STEEL INSTITUTE (AISI)

AISI-01	(1986; Addenda 1989) Cold-Formed Steel Design Manual

AMERICAN SOCIETY FOR TESTING AND MATERIALS (ASTM)

ASTM A 463	(1996a) Steel Sheet, Aluminum-Coated, by the Hot-Dip Process
ASTM A 653	(1996) Steel Sheet, Zinc-Coated (Galvanized) or Zinc-Iron Alloy-Coated (Galvannealed) by the Hot-Dip Process
ASTM A 792	(1995) Steel Sheet, 55% Aluminum-Zinc Alloy-Coated by the Hot-Dip Process
ASTM B 209	(1996) Aluminum and Aluminum-Alloy Sheet and Plate
ASTM D 2244	(1993) Calculation of Color Differences from Instrumentally Measured Color Coordinates
ASTM D 4214	(1989) Evaluating the Degree of Chalking of Exterior Paint Films
ASTM E 1592	(1995) Structural Performance of Sheet Metal Roof and Siding Systems by Uniform Static Air Pressure Difference

AMERICAN SOCIETY OF CIVIL ENGINEERS (ASCE)

ASCE 7	(1995) Minimum Design Loads for Buildings and Other Structures

1.2 GENERAL REQUIREMENTS

The Contractor shall furnish a manufacturer's standard product which satisfies all requirements contained herein and has been verified by load testing and independent design analyses to meet the specified design requirements.

1.2.1 Manufacturer

The SSSMR system shall be the product of a manufacturer who has been in the practice of manufacturing SSSMR systems for a period of not less than 3 years and has been involved in at least five projects similar in size and complexity to this project.

1.2.2 Installer

The installer shall be certified by the SSSMR system manufacturer to have experience in installing at least three projects that are of comparable size, scope and complexity as this project for the particular roof system furnished. The installer may be either employed by the manufacturer or be an independent installer.

1.3 DESIGN REQUIREMENTS

The design of the SSSMR system shall be provided by the Contractor as a complete system. Members and connections not indicated on the drawings shall be designed by the Contractor. Roof panels, components, transitions, accessories, and assemblies shall be supplied by the same manufacturer.

1.3.1 Design Criteria

Design criteria shall be in accordance with ASCE 7 unless otherwise specified.

1.3.2 Dead Loads

The dead load shall be the weight of the SSSMR system. Collateral loads such as sprinklers, mechanical and electrical systems, and ceilings shall not be attached to the panels.

1.3.3 Live Loads

1.3.3.1 Concentrated Loads

The panels and anchor clips shall be capable of supporting a 1335 N concentrated load. The concentrated load shall be applied at the panel midspan and will be resisted by a single standing seam metal roof panel assumed to be acting as a beam. The undeformed shape of the panel shall be used to determine the section properties.

1.3.3.2 Uniform Loads

The panels and concealed anchor clips shall be capable of supporting a minimum uniform live load of 960 Pa.

1.3.4 Roof Snow Loads

The design snow loads shall be as shown on the contract drawings.

1.3.5 Wind Loads

The design wind uplift pressure for the roof system shall be as shown on the contract drawings. The design uplift force for each connection assembly shall be that pressure given for the area under consideration, multiplied by the tributary load area of the connection assembly. The safety factor listed below shall be applied to the design force and compared against the ultimate capacity. Prying shall be considered when figuring fastener design loads.

a. Single fastener in each connection.....3.0

b. Two or more fasteners in each connection...2.25

1.3.6 Thermal Loads

Roof panels shall be free to move in response to the expansion and contraction forces resulting from a total temperature range of 122 degrees C during the life of the structure.

1.3.7 Framing Members Supporting the SSSMR System

Any additions/revisions to framing members supporting the SSSMR system to accommodate the manufacturer/fabricator's design shall be the Contractor's responsibility and shall be submitted for review and approval. New or revised framing members and their connections shall be designed in accordance with AISI-01. Maximum deflection under applied live load, snow, or wind load shall not exceed 1/180 of the span length.

1.3.8 Roof Panels Design

Steel panels shall be designed in accordance with AISI-01. Aluminum panels shall be designed in accordance with AA-02. The structural section properties used in the design of the panels shall be determined using the unloaded shape of the roof panels. The calculated panel deflection from concentrated loads shall not exceed 1/180 of the span length. The calculated panel deflection under applied live load, snow, or wind load shall not exceed 1/180 times the span length. Deflections shall be based on panels being continuous across three or more supports. Deflection shall be calculated and measured along the major ribs of the panels.

1.3.9 Accessories and Their Fasteners

Accessories and their fasteners shall be capable of resisting the specified design wind uplift forces and shall allow for thermal movement of the roof panel system. Exposed fasteners shall not restrict free movement of the roof panel system resulting from thermal forces. There shall be a minimum of two fasteners per clip. Single fasteners with a minimum diameter of 9 mm will be allowed when the supporting structural members are prepunched or predrilled.

1.4 PERFORMANCE REQUIREMENTS

The SSSMR shall be tested for wind uplift resistance in accordance with ASTM E 1592; SSSMR systems previously tested and approved by the Corps of Engineers' STANDARD TEST METHOD FOR STRUCTURAL PERFORMANCE OF SSMRS BY UNIFORM STATIC AIR PRESSURE DIFFERENCE may be acceptable. Two tests shall be performed. Test 1 shall simulate the edge condition with one end having crosswise restraint and other end free of crosswise restraint. The maximum span length for the edge condition shall be 750 mm. Test 2 shall simulate the interior condition with both ends free of crosswise restraint. The

maximum span length for the interior condition shall be 1.5 m . External reinforcement, such as clamps on the ribs, shall not be installed to improve uplift resistance. Bolts through seams shall not be installed.

1.5 SUBMITTALS

Government approval is required for submittals with a "GA" designation; submittals having an "FIO" designation are for information only. The following shall be submitted in accordance with Section 01330 SUBMITTAL PROCEDURES:

SD-01 Data

Design Analysis; FIO.

Design analysis signed by a Registered Professional Engineer employed by the SSSMR manufacturer. The design analysis shall include a list of the design loads, roofing system and its components; valley designs, gutter/downspout calculations, screw pullout test results, and shall indicate how expected thermal movements due to the specified temperature rangeare accommodated.

SD-04 Drawings

Structural Standing Seam Metal Roof System; FIO.

Metal roofing drawings and specifications and erection drawings; shop coating and finishing specifications; and other data as necessary to clearly describe design, materials, sizes, layouts, standing seam configuration, construction details, provisions for thermal movement, line of panel fixity, fastener sizes and spacings, sealants and erection procedures. Drawings shall reflect the intent of the architectural detailing using the manufacturer's proprietary products and fabricated items as required. The SSSMR system shop drawings shall be provided by the metal roofing manufacturer.

SD-08 Statements

Qualifications; FIO.

Qualifications of the manufacturer and installer.

SD-09 Reports

Test Report for Uplift Resistance of the SSSMR; FIO.

The report shall include the following information:

a. Details of the SSSMR system showing the roof panel cross-section with dimensions and thickness.

b. Details of the anchor clip, dimensions, and thickness.

c. Type of fasteners, size, and the number required for each connection.

d. Purlins/subpurlins size and spacing used in the test.

e. Description of the seaming operation including equipment used.

f. Maximum allowable uplift pressures. These pressures are determined from the ultimate load divided by a factor of safety equal to 1.65.

g. Any additional information required to identify the SSSMR system tested.

h. Signature and seal of an independent registered engineer who witnessed the test.

SD-13 Certificates

Structural Standing Seam Metal Roof System; FIO.

a. Certification that the actual thickness of uncoated sheets used in SSSMRS components including roofing panels, subpurlins, and concealed anchor clips complies with specified requirements.

b. Certification that materials used in the installation are mill certified.

c. Previous certification of SSSMR system tested under the Corps of Engineers' Standard Test Method in lieu of ASTM E 1592 testing.

d. Certification that the sheets to be furnished are produced under a continuing quality control program and that a representative sample consisting of not less than three pieces has been tested and has met the quality standards specified for factory color finish.

e. Certification of installer.

f. Warranty certificate. At the completion of the project the Contractor shall furnish signed copies of the 5-year Warranty for Structural Standing Seam Metal Roof (SSSMR) System, a sample copy of which is attached to this section, and the 20-year Manufacturer's Material Warranties.

SD-14 Samples

Accessories; FIO.

One sample of each type of flashing, trim, closure, thermal spacer block, cap and similar items. Size shall be sufficient to show construction and configuration.

Roof Panels; FIO.

One piece of each type to be used, 225 mm long, full width.

Factory Color Finish; FIO.

Three 75 by 125 mm samples of each type and color.

Fasteners; FIO.

Two samples of each type to be used, with statement regarding intended use.

If so requested, random samples of bolts, nuts, and washers as delivered to the job site shall be taken in the presence of the Contracting Officer and provided to the Contracting Officer for testing to establish compliance with specified requirements.

Gaskets and Insulating Compounds; FIO.

Two samples of each type to be used and descriptive data.

Sealant; FIO.

One sample, approximately 0.5 kg, and descriptive data.

Concealed Anchor Clips; FIO.

Two samples of each type used.

Subpurlins; FIO.

One piece, 225 mm long.

EPDM Rubber Boots; FIO.

One piece of each type.

1.6 DELIVERY AND STORAGE

Materials shall be delivered to the site in a dry and undamaged condition and stored out of contact with the ground. Materials shall be covered with weathertight coverings and kept dry. Storage conditions shall provide good air circulation and protection from surface staining.

1.7 WARRANTIES

The SSSMR system shall be warranted as outlined below. Any emergency temporary repairs conducted by the owner shall not negate the warranties.

1.7.1 Contractor's Weathertightness Warranty

The SSSMR system shall be warranted by the Contractor on a no penal sum basis for a period of five years against material and workmanship deficiencies; system deterioration caused by ordinary exposure to the elements and service design loads, water leaks, and wind uplift damage. The SSSMR system covered under this warranty shall include the entire roofing system including, but not limited to, the following: panel seams and joint, all accessories, components and trim; penetrations such as vents, curbs, and skylights; interior or exterior gutters and downspouts; eaves, ridge, hip, valley, rake, gable, wall, or other roof system flashings installed to provide a weathertight roof system; and items specified in other sections of these specifications that become part of the structural standing seam metal roof system. All material and workmanship deficiencies, system deterioration caused by ordinary exposure to the elements and service design loads, water leaks and wind uplift damage shall be repaired as approved by the Contracting Officer. This warranty shall warrant and cover the entire cost of repair or replacement, including all material, labor, and related markups. The Contractor may supplement this warranty with written warranties from the installer and/or manufacturer, which shall be submitted along with Contractor's warranty; however, the

Contractor shall be ultimately responsible for this warranty. The Contractor's written warranty shall be as outlined in attached example WARRANTY FOR STRUCTURAL STANDING SEAM METAL ROOF (SSSMR) SYSTEM, and shall start upon final acceptance of the facility or the date the Government takes possession, whichever is earlier. It shall be understood that the Contractor's Performance Bond will remain effective throughout the five year Contractor's warranty period for the entire SSSMR system as outlined above.

1.7.2 Manufacturer's Material Warranties.

The Contractor shall furnish, in writing, the following manufacturer's material warranties which cover all SSSMR system components such as roof panels, anchor clips and fasteners, flashing, accessories, and trim, fabricated from coil material:

a. A manufacturer's 20 year material warranty warranting that the aluminum, zinc-coated steel, aluminum-zinc alloy coated steel or aluminum-coated steel as specified herein will not rupture, structurally fail, fracture, deteriorate, or become perforated under normal design atmospheric conditions and service design loads. Liability under this warranty shall be limited exclusively to the cost of either repairing or replacing nonconforming, ruptured, perforated, or structurally failed coil material.

b. A manufacturer's 20 year exterior material finish warranty on the factory colored finish warranting that the finish, under normal atmospheric conditions at the site, will not crack, peel, or delaminate; chalk in excess of a numerical rating of eight, as determined by ASTM D 4214test procedures; or change color in excess of five CIE or Hunter Lab color difference (delta E) units in accordance with ASTM D 2244. Liability under this warranty is exclusively limited to refinishing with an air-drying version of the specified finish or replacing the defective coated material.

PART 2 PRODUCTS

2.1 ROOF PANELS

Panels shall be eithersteel or aluminum and shall have a factory color finish. Length of sheets shall be sufficient to cover the entire length of any unbroken roof slope for slope lengths that do not exceed 9 m. When length of run exceeds 9 m and panel laps are provided, each sheet in the run shall extend over three or more supports. Sheets longer than 30 m may be furnished if approved by the Contracting Officer. Width of sheets shall provide not more than 609.6mm of coverage in place. SSSMR system with roofing panels greater than 304.8 mm in width shall have standing seams rolled during installation by an electrically driven seaming machine. Height of standing seams shall be not less than 50 mm for rolled seam and 50 mm for seams that are not rolled.

2.1.1 Steel Panels

Steel panels shall be zinc-coated steel conforming to ASTM A 653; aluminum-zinc alloy coated steel conforming to ASTM A 792, AZ 50 coating; or aluminum-coated steel conforming to ASTM A 463, Type 2, coating designation T2 65. Uncoated panels shall be 0.6 mm thick minimum. Panels shall be within 95 percent of tested thickness.

2.1.2 Aluminum Panels

Alloy conforming to ASTM B 209, temper as required for the forming operation, minimum 0.8 mm thick.

2.2 CONCEALED ANCHOR CLIPS

Concealed anchor clips shall be the same as the tested roofing system. Clip bases shall have factory punched or drilled holes for attachment. Clips shall be made from multiple pieces with the allowance for the total thermal movement required to take place within the clip. Single piece clips may be acceptable when the manufacturer can substantiate that the system can accommodate the thermal cyclic movement under sustained live or snow loads.

2.3 ACCESSORIES

Flashing, trim, metal closure strips, caps and similar metal accessories shall be the manufacturer's standard products. Exposed metal accessories shall be finished to match the panels furnished. Molded closure strips shall be bituminous-saturated fiber, closed-cell or solid-cell synthetic rubber or neoprene, or polyvinyl chloride premolded to match configuration of the panels and shall not absorb or retain water. Die cast metal closures shall be installed with double bead tape sealant and fasteners that stitch the panel to a 2 mm preformed backer plate to ensure a positive compression of the tape sealant. The use of a continuous angle butted to the panel ends to form a closure will not be allowed.

2.4 FASTENERS

Fasteners shall be as specified under Section 13120 SPECIAL PURPOSE METAL BUILDING SYSTEMS.

2.5 SUBPURLINS

Cold formed supporting structural members/subpurlins shall have a minimum thickness of 1.5 mm and a minimum tensile yield strength of 345 MPa. Hot rolled structural members shall have a minimum thickness of 6 mm and a minimum tensile yield strength of 248 MPa. Subpurlins shall be galvanized or given one coat of shop paint.

2.6 FACTORY COLOR FINISH

Factory color finish shall be as specified under section 13120 STANDARD METAL BUILDING SYSTEMS.

2.7 SEALANT

Sealants shall be as specified under section 13120 STANDARD METAL BUILDING SYSTEMS.

2.8 GASKETS AND INSULATING COMPOUNDS

Gaskets and insulating compounds shall be as specified under section 13121 STANDARD METAL BUILDING SYSTEMS

2.9 EPDM RUBBER BOOTS

Flashing devices around pipe penetrations shall be flexible, one-piece

devices molded from weather-resistant EPDM rubber. Rubber boot material shall be as recommended by the manufacturer. A silicone sealant shall be added between the top sealing surface of the bot and the pipe that it's sealed against.The boots shall have base rings made of aluminum or corrosion resisting steel that conform to the contours of the roof panel to form a weather-tight seal.The top of the boot shall have a stainless steel drawband.

PART 3 EXECUTION

3.1 INSTALLATION

Installation shall be in accordance with the manufacturer's erection instructions and drawings. Dissimilar materials which are not compatible when contacting each other shall be insulated by means of gaskets or insulating compounds. Molded closure strips shall be installed wherever roofing sheets terminate in open-end configurations, exclusive of flashings. The closure strip installation shall be weather-tight and have sealant applied to both contact surfaces, unless a surface is designed for movement. Screws shall be installed with a clutching screw gun, to assure screws are not stripped. Field test shall be conducted on each gun prior to starting installation and periodically thereafter to assure it is adjusted properly to install particular type and size of screw as recommended by manufacturer's literature. Improper or mislocated drill holes shall be plugged with an oversize screw fastener and gasketed washer; however, sheets with an excess of such holes or with such holes in critical locations shall not be used. Exposed surfaces and edges shall be kept clean and free from sealant, metal cuttings, hazardous burrs, and other foreign material. Stained, discolored, or damaged sheets shall be removed from the site.

3.1.1 Field Forming of Panels

When roofing panels are formed from factory-color-finished steel coils at the project site, the same care and quality control measures that are taken in shop forming of roofing panels shall be observed. Roll former shall be operated by the metal roofing manufacturer's representative. In cold weather conditions, preheating of the steel coils to be field formed shall be performed as necessary just prior to the rolling operations.

3.1.2 Subpurlins

Unless otherwise shown, subpurlins shall be anchored to the purlins or other structural framing members with bolts or screws. . The subpurlin spacing shall not exceed 750 mm on centers at the corner, edge and ridge zones, and 1500 mm maximum on centers for the remainder of the roof. Corner, edge, and ridge zones are as defined in ASCE 7.

3.1.3 Roof Panel Installation

Roof panels shall be installed with the standing seams in the direction of the roof slope. The side seam connections for installed panels shall be completed at the end of each day's work. Method of applying joint sealant shall conform to the manufacturer's recommendation to achieve a complete weather-tight installation. End laps of panels shall be provided in accordance with the manufacturer's instructions. Closures, flashings, EPDM rubber boots, roof curbs, and related accessories shall be installed according to the manufacturer's drawings. Fasteners shall not puncture roofing sheets except as provided for in the manufacturer's instructions

for erection and installation. Expansion joints for the standing seam roof system shall be installed at locations as required by manufacturer.

3.1.4 Concealed Anchor Clips

Concealed anchor clips shall be fastened directly to subpurlins and purlins. Attachment to the substrate (when provided) or to the panels is not permitted. The maximum distance, parallel to the seams, between clips shall be 750 mm on center at the corner, edge, and ridge zones, and 1500 mm maximum on centers for the remainder of the roof.

3.2 CLEANING AND TOUCH-UP

Exposed SSSMR systems shall be cleaned at completion of installation. Debris that could cause discoloration and harm to the panels, flashings, closures and other accessories shall be removed. Grease and oil films, excess sealants, and handling marks shall be removed and the work shall be scrubbed clean. Exposed metal surfaces shall be free of dents, creases, waves, scratch marks, and solder or weld marks. Immediately upon detection, abraded or corroded spots on shop-painted surfaces shall be wire brushed and touched up with the same material used for the shop coat. Factory color finished surfaces shall be touched up with the manufacturer's recommended touch up paint.

CONTRACTOR'S FIVE (5) YEAR NO PENAL SUM WARRANTY

FOR

STRUCTURAL STANDING SEAM METAL ROOF (SSSMR) SYSTEM

PROJECT DESCRIPTION AND LOCATION (Include Bldg. No.):_____
CORPS OF ENGINEERS CONTRACT NUMBER:_____
SPECIFICATION SECTION NUMBER & DESCRIPTION:

07416 STRUCTURAL STANDING SEAM METAL ROOF (SSSMR) SYSTEM

CONTRACTOR:_____

ADDRESS:_____
POINT OF CONTACT:_____
TELEPHONE NUMBER:_____

OWNER:_____

ADDRESS:_____
POINT OF CONTACT:_____
TELEPHONE NUMBER:_____

CONSTRUCTION AGENT:_____

ADDRESS:_____
POINT OF CONTACT:_____
TELEPHONE NUMBER:_____

THE SSSMR SYSTEM INSTALLED ON THE ABOVE NAMED BUILDING IS WARRANTED BY _____ _____ FOR A PERIOD OF FIVE (5) YEARS AGAINST WORKMANSHIP AND MATERIAL DEFICIENCIES, WIND DAMAGE, STRUCTURAL FAILURE AND LEAKAGE. THE SSSMR SYSTEM COVERED UNDER THIS WARRANTY SHALL INCLUDE THE ENTIRE ROOFING SYSTEM, INCLUDING THE STANDING SEAM METAL ROOF PANELS, PANEL FINISHES, ROOFING SECUREMENT COMPONENTS, ALL ACCESSORIES, COMPONENTS, AND TRIM; INCLUDING PENETRATIONS SUCH VENTS, CURBS, SKYLIGHTS; INTERIOR OR EXTERIOR GUTTERS AND DOWNSPOUTS; EAVES, RIDGE, HIP, VALLEY, RAKE, GABLE, WALL, OR OTHER ROOF SYSTEM FLASHINGS INSTALLED TO PROVIDE A WEATHERTIGHT ROOF SYSTEM; AND ITEMS SPECIFIED IN OTHER SECTIONS OF THE SPECIFICATIONS THAT ARE PART OF THE SSSMR SYSTEM. ALL LEAKS SHALL BE REPAIRED AS APPROVED BY THE CONTRACTING OFFICER. THIS WARRANTY SHALL COVER

CONTRACTOR'S FIVE (5) YEAR NO PENAL SUM WARRANTY

FOR

STRUCTURAL STANDING SEAM METAL ROOF (SSSMR) SYSTEM

THE
ENTIRE COST OF REPAIR OR REPLACEMENT, INCLUDING ALL MATERIAL, LABOR, AND RELATED
MARKUPS. THE ABOVE REFERENCED WARRANTY COMMENCED ON THE DATE OF FINAL ACCEPTANCE ON _____ AND WILL REMAIN IN EFFECT FOR STATED DURATION FROM THIS DATE.

SIGNED, DATED, AND NOTARIZED (BY COMPANY PRESIDENT)

_____
(Company President) (Date)

(SEE REVERSE SIDE FOR SUPPLEMENTAL PROVISIONS AND EXCLUSIONS)

CONTRACTOR'S FIVE (5) YEAR NO PENAL SUM WARRANTY

FOR

STRUCTURAL STANDING SEAM METAL ROOF (SSSMR) SYSTEM

(continued)

THE CONTRACTOR MAY SUPPLEMENT THIS WARRANTY WITH WRITTEN WARRANTIES FROM THE INSTALLER AND/OR MANUFACTURER OF THE SSSMR SYSTEM, WHICH SHALL BE SUBMITTED ALONG WITH THE CONTRACTOR'S WARRANTY. HOWEVER, THE CONTRACTOR WILL BE ULTIMATELY RESPONSIBLE FOR THE WARRANTY AS OUTLINED IN THE SPECIFICATIONS AND AS INDICATED IN THIS WARRANTY EXAMPLE.

EXCLUSIONS FROM COVERAGE

1. NATURAL DISASTERS, ACTS OF GOD (LIGHTING, FIRE, EXPLOSIONS, SUSTAINED WIND FORCES IN EXCESS OF THE DESIGN CRITERIA, EARTHQUAKES, AND HAIL).

2. ACTS OF NEGLIGENCE OR ABUSE OR MISUSE BY GOVERNMENT OR OTHER PERSONNEL, INCLUDING ACCIDENTS, VANDALISM, CIVIL DISOBEDIENCE, WAR, OR DAMAGE CAUSED BY FALLING OBJECTS.

3. DAMAGE BY STRUCTURAL FAILURE, SETTLEMENT, MOVEMENT, DISTORTION, WARPAGE, OR DISPLACEMENT OF THE BUILDING STRUCTURE OR ALTERATIONS MADE TO THE BUILDING.

4. CORROSION CAUSED BY EXPOSURE TO CORROSIVE CHEMICALS, ASH OR FUMES GENERATED OR RELEASED INSIDE OR OUTSIDE THE BUILDING FROM CHEMICAL PLANTS, FOUNDRIES, PLATING WORKS, KILNS, FERTILIZER FACTORIES, PAPER PLANTS, AND THE LIKE.

5. FAILURE OF ANY PART OF THE SSSMR SYSTEM DUE TO ACTIONS BY THE OWNER TO INHIBIT FREE DRAINAGE FROM THE ROOF AND ALLOW PONDING WATER. CONTRACTOR'S DESIGN SHALL INSURE FREE DRAINAGE FROM THE ROOF AND NOT ALLOW PONDING WATER.

6. THIS WARRANTY APPLIES TO THE STRUCTURAL STANDING SEAM METAL ROOF (SSSMR) SYSTEM. IT DOES NOT INCLUDE ANY CONSEQUENTIAL DAMAGE TO THE BUILDING INTERIOR OR CONTENTS WHICH IS COVERED BY THE WARRANTY OF CONSTRUCTION CLAUSE INCLUDED IN THIS CONTRACT.

7. THIS WARRANTY CANNOT BE TRANSFERRED TO ANOTHER OWNER WITHOUT WRITTEN CONSENT OF THE CONTRACTOR AND THIS WARRANTY AND THE CONTRACT PROVISIONS WILL TAKE PRECEDENCE OVER ANY CONFLICTS WITH STATE STATUTES, UNLESS OTHERWISE APPROVED IN WRITING BY THE CONTRACTING OFFICER.

LEAKS SHALL BE RESPONDED TO WITHIN 48 HOURS OF RECEIPT OF NOTICE BY TELEPHONE OR IN WRITING FROM EITHER THE OWNER, OR CONTRACTING OFFICER. EMERGENCY REPAIRS, TO PREVENT FURTHER ROOF LEAKS, SHALL BE INITIATED IMMEDIATELY; A WRITTEN PLAN SHALL BE SUBMITTED FOR APPROVAL TO REPAIR OR REPLACE THIS SSSMR SYSTEM WITHIN SEVEN CALENDAR DAYS. ACTUAL WORK FOR PERMANENT REPAIRS OR REPLACEMENT SHALL BE STARTED WITHIN 30 DAYS AFTER RECEIPT OF NOTICE, AND COMPLETED WITHIN A REASONABLE TIME FRAME. IF THE CONTRACTOR FAILS TO ADEQUATELY RESPOND TO THE WARRANTY PROVISIONS, AS STATED IN THE CONTRACT AND AS CONTAINED HEREIN, THE

CONTRACTOR'S FIVE (5) YEAR NO PENAL SUM WARRANTY

FOR

STRUCTURAL STANDING SEAM METAL ROOF (SSSMR) SYSTEM

(continued)

CONTRACTING OFFICER MAY HAVE THE SSSMR SYSTEM REPAIRED OR REPAIRED BY OTHERS AND
CHARGE THE COST TO THE CONTRACTOR.

A FRAMED COPY OF THIS WARRANTY SHALL BE POSTED IN THE MECHANICAL ROOM OR OTHER APPROVED LOCATION DURING THE ENTIRE WARRANTY PERIOD.

-- End of Section --

SECTION TABLE OF CONTENTS

DIVISION 07 - THERMAL & MOISTURE PROTECTION

SECTION 07600

SHEET METALWORK, GENERAL

PART 1 GENERAL

1.1 REFERENCES
1.2 GENERAL REQUIREMENTS
1.2.1 Coordination
1.3 SUBMITTALS
1.4 DELIVERY, STORAGE, AND HANDLING

PART 2 PRODUCTS

2.1 MATERIALS
2.1.1 Accessories
2.1.2 Aluminum Extrusions
2.1.3 Bituminous Cement
2.1.4 Sealant
2.1.5 Fasteners
2.1.6 Felt
2.1.7 Aluminum Alloy Sheet and Plate
2.1.8 Copper
2.1.9 Stainless Steel
2.1.10 Solder
2.1.11 Louver Screen

PART 3 EXECUTION

3.1 GENERAL
3.2 EXPANSION JOINTS
3.3 PROTECTION OF ALUMINUM
3.3.1 Paint
3.3.2 Riveting
3.3.3 Seaming
3.4 CLEATS
3.5 GUTTERS AND DOWNSPOUTS
3.6 FLASHINGS
3.6.1.1 Sill Flashing
3.7 INSTALLATION OF LOUVERS
3.8 CONTRACTOR QUALITY CONTROL

-- End of Section Table of Contents --

SECTION 07600

SHEET METALWORK, GENERAL

PART 1 GENERAL

1.1 REFERENCES

The publications listed below form a part of this specification to the extent referenced. The publications are referred to in the text by basic designation only.

AMERICAN SOCIETY FOR TESTING AND MATERIALS (ASTM)

ASTM A 167	(1996) Stainless and Heat-Resisting Chromium-Nickel Steel Plate, Sheet, and Strip
ASTM B 32	(1995b) Solder Metal
ASTM B 209	(1995) Aluminum and Aluminum-Alloy Sheet and Plate
ASTM B 221	(1996) Aluminum and Aluminum-Alloy Extruded Bars, Rods, Wire, Shapes, and Tubes
ASTM B 370	(1992) Copper Sheet and Strip for Building Construction
ASTM D 226	(1994) Asphalt-Saturated Organic Felt Used in Roofing and Waterproofing
ASTM D 2822	(1991) Asphalt Roof Cement
ASTM D 4022	(1994) Coal Tar Roof Cement, Asbestos Containing
ASTM D 4586	(1993) Asphalt Roof Cement, Asbestos Free

INSECT SCREENING WEAVERS ASSOCIATION (ISWA)

ISWA IWS 089	(1990) Recommended Standards and Specifications for Insect Wire Screening (Wire Fabric)

SHEET METAL AND AIR CONDITIONING CONTRACTORS NATIONAL ASSOCIATION (SMACNA)

SMACNA-02	(1993) Architectural Sheet Metal Manual

1.2 GENERAL REQUIREMENTS

Sheet metalwork shall be accomplished to form weathertight construction without waves, warps, buckles, fastening stresses or distortion, and shall

allow for expansion and contraction.

1.2.1 Coordination

Cutting, fitting, drilling, and other operations in connection with sheet metal required to accommodate the work of other trades shall be performed by sheet metal mechanics. Installation of sheet metal items used in conjunction with roofing shall be coordinated with roofing work to permit continuous roofing operations. Sheet metalwork pertaining to heating, ventilating, and air conditioning is specified in other Sections.

1.3 SUBMITTALS

Government approval is required for submittals with a "GA" designation; submittals having an "FIO" designation are for information only. The following shall be submitted in accordance with Section 01330 SUBMITTAL PROCEDURES:

SD-04 Drawings

Materials; FIO.

Drawings of sheet metal items showing weights, gauges or thicknesses; types of materials; expansion-joint spacing; fabrication details; and installation procedures.

1.4 DELIVERY, STORAGE, AND HANDLING

Materials shall be adequately packaged and protected during shipment and shall be inspected for damage, dampness, and wet-storage stains upon delivery to the jobsite. Materials shall be clearly labeled as to type and manufacturer. Sheet metal items shall be carefully handled to avoid damage. Materials shall be stored in dry, ventilated areas until immediately before installation.

PART 2 PRODUCTS

2.1 MATERIALS

Lead, lead-coated metal, and galvanized steel shall not be used. Any metal listed by SMACNA-02 for a particular item may be used, unless otherwise specified or indicated. Materials shall conform to the requirements specified below and to the thicknesses and configurations established in SMACNA-02. Different items need not be of the same metal, except that if copper is selected for any exposed item, all exposed items shall be copper.

2.1.1 Accessories

Accessories and other items essential to complete the sheet metal installation, though not specifically indicated or specified, shall be provided.

2.1.2 Aluminum Extrusions

ASTM B 221, Alloy 6063, Temper T5.

2.1.3 Bituminous Cement

Type I asphalt cement conforming to ASTM D 2822 or ASTM D 4586. For coal

tar roofing; coal tar cement conforming to ASTM D 4022.

2.1.4 Sealant

Unless otherwise specified, sealant shall be an elastomeric weather resistant sealant as specified in Section 07920 JOINT SEALING.

2.1.5 Fasteners

Fasteners shall be compatible with the fastened material and shall be the type best suited for the application.

2.1.6 Felt

ASTM D 226, Type I.

2.1.7 Aluminum Alloy Sheet and Plate

ASTM B 209, clad, form, alloy, and temper appropriate for use.

2.1.8 Copper

ASTM B 370, Temper H 00.

2.1.9 Stainless Steel

ASTM A 167, Type 302 or 304; fully annealed, dead soft temper.

2.1.10 Solder

ASTM B 32, 95-5 tin-antimony.

2.1.11 Louver Screen

Type III aluminum alloy insect screening conforming to ISWA IWS 089.

PART 3 EXECUTION

3.1 GENERAL

Items such as gutters, downspouts and louvers shall be fabricated in conformance with SMACNA-02 and as indicated. Unless otherwise specified or indicated, exposed edges shall be folded back to form a 13 mm (1/2 inch) hem on the concealed side, and bottom edges of exposed vertical surfaces shall be angled to form drips. Bituminous cement shall not be placed in contact with roofing membranes other than built-up roofing.

3.2 EXPANSION JOINTS

Expansion joints shall be provided as specified in SMACNA-02. Expansion joints in continuous sheet metal shall be provided at 12.0 meter intervals for copper and stainless steel and at 9.6 meter intervals for aluminum, except extruded aluminum gravel stops and fasciae which shall have expansion joints at not more than 3.6 meter spacing. Joints shall be evenly spaced. An additional joint shall be provided where the distance between the last expansion joint and the end of the continuous run is more than half the required interval spacing.

3.3 PROTECTION OF ALUMINUM

Aluminum shall not be used where it will be in contact with copper or where it will contact water which flows over copper surfaces. Aluminum that will be in contact with wet or pressure-treated wood, mortar, concrete, masonry, or ferrous metals shall be protected against galvanic or corrosive action by one of the following methods:

3.3.1 Paint

Alμminum sheet copper not less than 0.14 kg, factory coated both sides with acid- and alkali-resistant bituminous compound not less than 1.8 kg per square meter or factory covered both sides with asphalt-saturated cotton fabric, asphalt saturated glass-fiber fabric, or with 18 kg reinforced kraft paper bonded with asphalt.

b. Stainless steel, Type 304, not less than 0.08 mm all apply to copper, and stainless steel items. Edges of sheet metal shall be pretinned before soldering is begun. Soldering shall be done slowly with well heated soldering irons so as to thoroughly heat the seams and completely sweat the solder through the full width of the seam. Edges of stainless steel to be pretinned shall be treated with soldering acid flux. Soldering shall follow immediately after application of the flux. Upon completion of soldering, the acid flux residue shall be thoroughly cleaned from the sheet metal with a water solution of washing soda and rinsed with clean water.

3.3.2 Riveting

Joints in aluminum sheets 1.0 mm or less in thickness shall be mechanically made.

3.3.3 Seaming

Flat-lock and soldered-lap seams shall finish not less than 25 mm wide. Unsoldered plain-lap seams shall lap not less than 75 mm unless otherwise specified. Flat seams shall be made in the direction of the flow.

3.4 CLEATS

A continuous cleat shall be provided where indicated or specified to secure loose edges of the sheet metalwork. Butt joints of cleats shall be spaced approximately 3 mm apart. The cleat shall be fastened to supporting wood construction with nails evenly spaced not over 300 mm on centers. Where the fastening is to be made to concrete or masonry, screws shall be used and shall be driven in expansion shields set in concrete or masonry.

3.5 GUTTERS AND DOWNSPOUTS

Gutters and downspouts shall be installed as indicated. Gutters shall be supported by continuous cleatsandorby cleats spaced not less than 915 mm (36 inches) apart. Downspouts shall be rigidly attached to the building. Supports for downspouts shall be spaced according to manufacturer's recommendations.

3.6 FLASHINGS

Flashings shall be installed at locations indicated and as specified below. Sealing shall be according to the flashing manufacturer's recommendations. Flashings shall be installed at intersections of roof with vertical surfaces and at projections through roof, except that flashing for heating

and plumbing, including piping, roof, and floor drains, and for electrical conduit projections through roof or walls are specified in other sections. Flashing shall be formed to direct water to the outside of the system.

3.6.1.1 Sill Flashing

Sill flashing shall extend the full width of the sill and not less than 100 mm beyond ends of sill except at control joint where the flashing shall be terminated at the end of the sill.

3.7 INSTALLATION OF LOUVERS

Louvers shall be rigidly attached to the supporting construction. The installation shall be rain-tight. Louver screen shall be installed as indicated.

3.8 CONTRACTOR QUALITY CONTROL

The Contractor shall establish and maintain a quality control procedure for sheet metal used in conjunction with roofing to assure compliance of the installed sheet metalwork with the contract requirements. Any work found not to be in compliance with the contract shall be promptly removed and replaced or corrected in an approved manner. Quality control shall include, but not be limited to, the following:

a. Observation of environmental conditions; number and skill level of sheet metal workers; condition of substrate.

b. Verification of compliance of materials before, during, and after installation.

c. Inspection of sheet metalwork for proper size and thickness, fastening and joining, and proper installation.

The actual quality control observations and inspections shall be documented and a copy of the documentation furnished to the Contracting Officer at the end of each day.

-- End of Section --

SECTION TABLE OF CONTENTS

DIVISION 07 - THERMAL & MOISTURE PROTECTION

SECTION 07900

JOINT SEALING

PART 1 GENERAL

1.1 REFERENCES
1.2 SUBMITTALS
1.3 ENVIRONMENTAL REQUIREMENTS
1.4 DELIVERY AND STORAGE

PART 2 PRODUCTS

2.1 BACKING
2.1.1 Rubber
2.1.2 PVC
2.1.3 Synthetic Rubber
2.2 BOND-BREAKER
2.3 PRIMER
2.4 SEALANT
2.4.1 LATEX
2.4.2 ELASTOMERIC
2.4.3 ACOUSTICAL
2.4.4 BUTYL
2.4.5 PREFORMED
2.5 SOLVENTS AND CLEANING AGENTS

PART 3 EXECUTION

3.1 GENERAL
3.1.1 Surface Preparation
3.1.2 Concrete Surfaces
3.1.3 Steel Surfaces
3.1.4 Aluminum Surfaces
3.1.5 Wood Surfaces
3.2 APPLICATION
3.2.1 Masking Tape
3.2.2 Backing
3.2.3 Bond-Breaker
3.2.4 Primer
3.2.5 Sealant
3.3 CLEANING

-- End of Section Table of Contents --

SECTION 07900

JOINT SEALING

PART 1 GENERAL

1.1 REFERENCES

The publications listed below form a part of this specification to the extent referenced. The publications are referred to in the text by basic designation only.

AMERICAN SOCIETY FOR TESTING AND MATERIALS (ASTM)

ASTM C 509	(1994) Elastomeric Cellular Preformed Gasket and Sealing Material
ASTM C 734	(1993) Low-Temperature Flexibility of Latex Sealants After Artificial Weathering
ASTM C 834	(1995) Latex Sealants
ASTM C 920	(1994) Elastomeric Joint Sealants
ASTM C 1085	(1991) Butyl Rubber-Based Solvent-Release Sealants
ASTM C 1184	(1995) Structural Silicone-Sealants
ASTM D 217	(1994) Cone Penetration of Lubricating Grease
ASTM D 1056	(1991) Flexible Cellular Materials - Sponge or Expanded Rubber
ASTM D 1565	(1981; R 1990) Flexible Cellular Materials - Vinyl Chloride Polymers and Copolymers (Open-Cell Foam)
ASTM E 84	(1996a) Surface Burning Characteristics of Building Materials

1.2 SUBMITTALS

Government approval is required for submittals with a "GA" designation; submittals having an "FIO" designation are for information only. The following shall be submitted in accordance with Section 01330 SUBMITTAL PROCEDURES:

SD-01 Data

Backing; FIO. Bond-Breaker; FIO.

Sealant; FIO.

Manufacturer's descriptive data including storage requirements, shelf life, curing time, instructions for mixing and application, and primer data (if required). A copy of the Material Safety Data Sheet shall be provided for each solvent, primer or sealant material.

SD-13 Certificates

Sealant; FIO.

Certificates of compliance stating that the materials conform to the specified requirements.

1.3 ENVIRONMENTAL REQUIREMENTS

The ambient temperature shall be within the limits of 4 to 32 degrees C when the sealants are applied.

1.4 DELIVERY AND STORAGE

Materials shall be delivered to the job in the manufacturer's original unopened containers. The container label or accompanying data sheet shall include the following information as applicable: manufacturer, name of material, formula or specification number, lot number, color, date of manufacture, mixing instructions, shelf life, and curing time at the standard conditions for laboratory tests. Materials shall be handled and stored to prevent inclusion of foreign materials. Materials shall be stored at temperatures between 4 and 32 degrees C unless otherwise specified by the manufacturer.

PART 2 PRODUCTS

2.1 BACKING

Backing shall be 25 to 33 percent oversize for closed cell and 40 to 50 percent oversize for open cell material, unless otherwise indicated.

2.1.1 Rubber

Cellular rubber sponge backing "A" shall be ASTM D 1056,Type 2, closed cell, Class A, Grade one, round cross section.

2.1.2 PVC

Polyvinyl chloride (PVC) backing "B" shall be ASTM D 1565, Grade VO 12, open-cell foam, round cross section.

2.1.3 Synthetic Rubber

Synthetic rubber backing "C" shall be ASTM C 509, Option I, Type I preformed rods or tubes.

2.2 BOND-BREAKER

Bond-breaker shall be as recommended by the sealant manufacturer to prevent adhesion of the sealant to backing or to bottom of the joint.

2.3 PRIMER

Primer shall be non-staining type as recommended by sealant manufacturer for the application.

2.4 SEALANT

2.4.1 LATEX

Latex Sealant "D" shall be ASTM C 834.

2.4.2 ELASTOMERIC

Elastomeric sealants shall conform to ASTM C 920 and the following:

a. Polysulfide sealant "E": Type S or M, Grade NS or P, Class 25, Use NT, G, A, or O as applicable.

b. Polyurethane sealant "F": Grade NS or P, Class 25 , Use T, NT, M, G, A, or O as applicable.

c. Silicone sealant "G": Type S or M, Grade NS or P, Class 25 , Use NT, M, G, A, or O as applicable.

d. Structural silicone sealant "H": ASTM C 1184, Type S or M, Use G or O as applicable.

2.4.3 ACOUSTICAL

Rubber or polymer-based acoustical sealant "I" shall have a flame spread of 25 or less and a smoke developed rating of 50 or less when tested in accordance with ASTM E 84. Acoustical sealant shall have a consistency of 250 to 310 when tested in accordance with ASTM D 217, and shall remain flexible and adhesive after 500 hours of accelerated weathering as specified in ASTM C 734, and shall be non-staining.

2.4.4 BUTYL

Butyl sealant "J" shall be ASTM C 1085.

2.4.5 PREFORMED

Preformed sealant shall be polybutylene or isoprene-butylene based pressure sensitive weather resistant tape or bead sealant capable of sealing out moisture, air and dust when installed as recommended by the manufacturer. At temperatures from minus 34 to plus 71 degrees C, the sealant shall be non-bleeding and shall have no loss of adhesion.

2.5 SOLVENTS AND CLEANING AGENTS

Solvents, cleaning agents, and accessory materials shall be provided as recommended by the manufacturer.

PART 3 EXECUTION

3.1 GENERAL

3.1.1 Surface Preparation

The surfaces of joints to receive sealant or caulk shall be free of all frost, condensation and moisture. Oil, grease, dirt, chalk, particles of

mortar, dust, loose rust, loose mill scale, and other foreign substances shall be removed from surfaces of joints to be in contact with the sealant. Oil and grease shall be removed with solvent and surfaces shall be wiped dry with clean cloths. For surface types not listed below, the sealant manufacturer shall be contacted for specific recommendations.

3.1.2 Concrete Surfaces

Where surfaces have been treated with curing compounds, oil, or other such materials, the materials shall be removed by sandblasting or wire brushing. Laitance, efflorescence and loose mortar shall be removed from the joint cavity.

3.1.3 Steel Surfaces

Steel surfaces to be in contact with sealant shall be sandblasted or, if sandblasting would not be practical or would damage adjacent finish work, the metal shall be scraped and wire brushed to remove loose mill scale. Protective coatings on steel surfaces shall be removed by sandblasting or by a solvent that leaves no residue.

3.1.4 Aluminum Surfaces

Aluminum surfaces to be in contact with sealants shall be cleaned of temporary protective coatings. When masking tape is used for a protective cover, the tape and any residual adhesive shall be removed just prior to applying the sealant. Solvents used to remove protective coating shall be as recommended by the manufacturer of the aluminum work and shall be non-staining.

3.1.5 Wood Surfaces

Wood surfaces to be in contact with sealants shall be free of splinters and sawdust or other loose particles.

3.2 APPLICATION

3.2.1 Masking Tape

Masking tape shall be placed on the finish surface on one or both sides of a joint cavity to protect adjacent finish surfaces from primer or sealant smears. Masking tape shall be removed within 10 minutes after joint has been filled and tooled.

3.2.2 Backing

Backing shall be installed to provide the indicated sealant depth. The installation tool shall be shaped to avoid puncturing the backing.

3.2.3 Bond-Breaker

Bond-breaker shall be applied to fully cover the bottom of the joint without contaminating the sides where sealant adhesion is required.

3.2.4 Primer

Primer shall be used on wood, or other porous surfaces in accordance with instructions furnished with the sealant. Primer shall be applied to the joint surfaces to be sealed. Surfaces adjacent to joints shall not be

primed.

3.2.5 Sealant

Sealant shall be used before expiration of shelf life. Multi-component sealants shall be mixed according to manufacturer's printed instructions. Sealant in guns shall be applied with a nozzle of proper size to fit the width of joint. Joints shall be sealed as detailed in the drawings. Sealant shall be forced into joints with sufficient pressure to expel air and fill the groove solidly. Sealant shall be installed to the indicated depth without displacing the backing. Unless otherwise indicated, specified, or recommended by the manufacturer, the installed sealant shall be dry tooled to produce a uniformly smooth surface free of wrinkles and to ensure full adhesion to the sides of the joint; the use of solvents, soapy water, etc., will not be allowed. Sealants shall be installed free of air pockets, foreign embedded matter, ridges and sags. Sealer shall be applied over the sealant when and as specified by the sealant manufacturer.

3.3 CLEANING

The surfaces adjoining the sealed joints shall be cleaned of smears and other soiling resulting from the sealant application as work progresses.

-- End of Section --

SECTION TABLE OF CONTENTS

DIVISION 08 - DOORS & WINDOWS

SECTION 08110

STEEL DOORS AND FRAMES

PART 1 GENERAL

1.1 REFERENCES
1.2 SUBMITTALS
1.3 DELIVERY AND STORAGE
1.4 WARRANTY

PART 2 PRODUCTS

2.1 DOORS AND FRAMES
2.2 FIRE RATED DOORS
2.3 THERMAL INSULATED DOORS
2.4 WEATHERSTRIPPING
2.5 LOUVERS
2.6 FACTORY FINISH

PART 3 EXECUTION

3.1 INSTALLATION
3.1.1 Thermal Insulated Doors

-- End of Section Table of Contents --

SECTION 08110

STEEL DOORS AND FRAMES

PART 1 GENERAL

1.1 REFERENCES

The publications listed below form a part of this specification to the extent referenced. The publications are referred to in the text by basic designation only.

AMERICAN SOCIETY FOR TESTING AND MATERIALS (ASTM)

ASTM C 236	(1989; R 1993) Steady-State Thermal Performance of Building Assemblies by Means of a Guarded Hot Box
ASTM C 976	(1990) Thermal Performance of Building Assemblies by Means of a Calibrated Hot Box
ASTM D 2863	(1991) Measuring the Minimum Oxygen Concentration to Support Candle-Like Combustion of Plastics (Oxygen Index)
ASTM E 283	(1991) Determining the Rate of Air Leakage Through Exterior Windows, Curtain Walls, and Doors Under Specified Pressure Differences Across the Specimen

DOOR AND HARDWARE INSTITUTE (DHI)

DHI A115.1G	(1994) Installation Guide for Doors and Hardware

NATIONAL FIRE PROTECTION ASSOCIATION (NFPA)

NFPA 80	X (1995) Fire Doors and Windows
NFPA 80A	(1993) Protection of Buildings from Exterior Fire Exposures
NFPA 101	X (1997) Safety to Life from Fire in Buildings and Structures
NFPA 252	(1995) Fire Tests of Door Assemblies

STEEL DOOR INSTITUTE (SDOI)

SDOI SDI-100	(1991) Standard Steel Doors and Frames
SDOI SDI-106	(1996) Standard Door Type Nomenclature
SDOI SDI-107	(1984) Hardware on Steel Doors

(Reinforcement - Application)

1.2 SUBMITTALS

Government approval is required for submittals with a "GA" designation; submittals having an "FIO" designation are for information only. The following shall be submitted in accordance with Section 01300 SUBMITTAL PROCEDURES:

SD-04 Drawings

Steel Doors and Frames; FIO.

Drawings using standard door type nomenclature in accordance with SDOI SDI-106 indicating the location of each door and frame, elevation of each model of door and frame, details of construction, method of assembling sections, location and extent of hardware reinforcement, hardware locations, type and location of anchors for frames, and thicknesses of metal. Drawings shall include catalog cuts or descriptive data for the doors, frames, and weatherstripping including air infiltration data and manufacturers printed instructions.

SD-09 Reports

Fire Rated Doors; FIO.

A letter by a nationally recognized testing laboratory which identifies the product manufacturer, type, and model; certifying that the laboratory has tested a sample assembly in accordance with NFPA 252 and issued a current listing for same.

SD-13 Certificates

Fire Rated Doors; FIO. Thermal Insulated Doors .

b. Certification of Thermal Insulating Rating: Certification or test report for thermal insulated doors shall show compliance with the specified requirements. The certification, or test report, shall list the parameters and the type of hardware and perimeter seals used to achieve the rating.

SD-14 Samples

Steel Doors and Frames; FIO.

Manufacturer's standard color samples of factory applied finishes.

1.3 DELIVERY AND STORAGE

During shipment, welded unit type frames shall be strapped together in pairs with heads at opposite ends or shall be provided with temporary steel spreaders at the bottom of each frame; and knockdown type frames shall be securely strapped in bundles. Materials shall be delivered to the site in undamaged condition, and stored out of contact with the ground and under a weathertight covering permitting air circulation. Doors and assembled frames shall be stored in an upright position in accordance with DHI A115.1G. Abraded, scarred, or rusty areas shall be cleaned and touched up with

matching finishes.

1.4 WARRANTY

Manufacturer's standard performance guarantees or warranties that extend beyond a 1 year period shall be provided.

PART 2 PRODUCTS

2.1 DOORS AND FRAMES

Doors and frames shall be factory fabricated in accordance with SDOI SDI-100 and the additional requirements specified herein. Door grade shall be heavy duty (Grade II) unless otherwise indicated on the door and door frame schedules. Exterior doors and frames shall be designation A40 galvanized. Doors and frames shall be prepared to receive hardware conforming to the templates and information provided under Section 08700 BUILDERS' HARDWARE. Doors and frames shall be reinforced, drilled, and tapped to receive mortised hinges, locks, latches, and flush bolts as required. Doors and frames shall be reinforced for surface applied hardware. Frames shall be knockdown type and welded type located as shown . Door frames shall be furnished with a minimum of three jamb anchors and one floor anchor per jamb. Anchors shall be not less than 1.2 mm (18 gauge) steel or 4.5 mm (7 gauge) diameter wire. For wall conditions that do not allow the use of a floor anchor, an additional jamb anchor shall be provided. Rubber silencers shall be furnished for installation into factory predrilled holes in door frames; adhesively applied silencers are not acceptable. Reinforcing of door assemblies for closers and other required hardware shall be in accordance with SDOI SDI-100and the conditions of the fire door assembly listing when applicable. Exterior doors shall have top edges closed flush and sealed against water penetration.

2.2 FIRE RATED DOORS

Fire rated door assemblies shall bear the listing identification label of a nationally recognized testing laboratory qualified to perform tests of fire door assemblies in accordance with NFPA 252 and having a listing for the tested assemblies. The fire resistance rating shall be as shown. Doors exceeding the sizes for which listing label service is offered shall be in accordance with NFPA 252. Listing identification labels shall be constructed and permanently applied by a method which results in their destruction should they be removed.

2.3 THERMAL INSULATED DOORS

The interior of thermal insulated doors shall be completely filled with rigid plastic foam permanently bonded to each face panel. The thermal conductance (U-value) through the door shall not exceed 2.33 W/sq m times K (0.41 btu/hr times sq f times f) when tested as an operational assembly in accordance with ASTM C 236 or ASTM C 976. Doors with cellular plastic cores shall have a minimum oxygen index rating of 22 percent when tested in accordance with ASTM D 2863.

2.4 WEATHERSTRIPPING

Unless otherwise specified in Section 08700 BUILDERS' HARDWARE, weatherstripping shall be as follows: Weatherstripping for head and jamb shall be manufacturer's standard elastomeric type of synthetic rubber, vinyl, or neoprene and shall be installed at the factory or on the jobsite

in accordance with the door frame manufacturer's recommendations. Weatherstripping for bottom of doors shall be as shown. Air leakage rate of weatherstripping shall not exceed 0.31 l/s per linear meter (0.20 cfm per linear foot) of crack when tested in accordance with ASTM E 283 at standard test conditions.

2.5 LOUVERS

Where indicated, doors shall be provided with louver sections. Louvers shall be sightproof type inserted into the door. Pierced louvers shall not be used on exterior doors. Inserted louvers shall be stationary. Louvers shall be nonremovable from the unsecure side of interior doors.

2.6 FACTORY FINISH

Doorsandframes shall be phosphatized, primed, and finished with an electrostatic baked on enamel or polyester base factory finish paint system. Color shall be as shown on the color schedule.

PART 3 EXECUTION

3.1 INSTALLATION

Installation shall be in accordance with DHI A115.1G. Preparation for surface applied hardware shall be in accordance with SDOI SDI-107. Rubber silencers shall be installed in door frames after finish painting has been completed; adhesively applied silencers are not acceptable. Weatherstripping shall be installed at exterior door openings to provide a weathertight installation. Installation and operational characteristics of fire doors shall be in accordance with NFPA 80, NFPA 80A and NFPA 101.

3.1.1 Thermal Insulated Doors

Hardware and perimeter seals shall be adjusted for proper operation. Doors shall be sealed weathertight after installation of hardware and shall be in accordance with Section 07920 JOINT SEALING.

-- End of Section --

SECTION TABLE OF CONTENTS

DIVISION 08 - DOORS & WINDOWS

SECTION 08330

OVERHEAD ROLLING DOORS

PART 1 GENERAL

1.1 REFERENCES
1.2 DESCRIPTION
1.2.1 Wind Load Requirements
1.2.2 Operational Cycle Life
1.3 SUBMITTALS
1.4 DELIVERY AND STORAGE
1.5 WARRANTY
1.6 OPERATION AND MAINTENANCE MANUALS
1.7 DOOR HARDWARE

PART 2 PRODUCTS

2.1 OVERHEAD ROLLING DOORS
2.1.1 Curtains
2.1.1.1 Insulated Curtains
2.1.2 Endlocks and Windlocks
2.1.3 Bottom Bar
2.1.4 Guides
2.1.5 Barrel
2.1.6 Springs
2.1.7 Brackets
2.1.8 Hoods
2.1.9 Weatherstripping
2.1.10 Slat Openings
2.1.11 Operation
2.1.11.1 Electric Power Operator With Auxiliary Chain Hoist Operation
2.1.12 Inertia Brake
2.1.13 Locking
2.1.14 Finish

PART 3 EXECUTION

3.1 INSTALLATION

-- End of Section Table of Contents --

SECTION 08330

OVERHEAD ROLLING DOORS

PART 1 GENERAL

1.1 REFERENCES

The publications listed below form a part of this specification to the extent referenced. The publications are referred to in the text by basic designation only.

AMERICAN SOCIETY FOR TESTING AND MATERIALS (ASTM)

ASTM A 653	(1996) Steel Sheet, Zinc-Coated (Galvanized) or Zinc-Iron Alloy-Coated (Galvannealed) by the Hot-Dip process
ASTM E 84	(1996a) Surface Burning Characteristics of Building Materials

AMERICAN SOCIETY OF HEATING, REFRIGERATING, AND AIR-CONDITIONING ENGINEERS (ASHRAE)

ASHRAE-03	(1993) Handbook, Fundamentals I-P Edition

NATIONAL ELECTRICAL MANUFACTURERS ASSOCIATION (NEMA)

NEMA ICS 2	(1993) Industrial Control and Systems Controllers, Contactors, and Overload Relays Rated Not More Than 2,000 Volts AC or 750 Volts DC
NEMA ICS 6	(1993) Industrial Control and Systems Enclosures
NEMA MG 1	(1993; Rev 1, Rev 2, Rev 3) Motors and Generators

NATIONAL FIRE PROTECTION ASSOCIATION (NFPA)

NFPA 80	(1995) Fire Doors and Windows

1.2 DESCRIPTION

Overhead rolling doors shall be spring counterbalanced, rolling type, with interlocking slats, complete with guides, fastenings, hood, brackets, and operating mechanisms, and shall be designed for use on openings as indicated. Each door shall be provided with a permanent label showing the manufacturer's name and address and the model/serial number of the door. Doors in excess of the labelled size shall be deemed oversize and shall be provided with a listing agency oversize label, or a listing agency oversize certificate, or a certificate signed by an official of the manufacturing company certifying that the door and operator have been designed to meet the specified requirements.

1.2.1 Wind Load Requirements

Doors and components shall be designed to withstand the minimum design wind load of 960 pa. Doors shall be constructed to sustain a superimposed load, both inward and outward, equal to 1-1/2 times the minimum design wind load. The door shall support the superimposed loads for a minimum period of 10 seconds without evidence of serious damage and shall be operable after conclusion of the tests. Calculations shall be provided that prove the door design meets the design windload requirements.

1.2.2 Operational Cycle Life

All portions of the door and door operating mechanism that are subject to movement, wear, or stress fatigue shall be designed to operate through a minimum number of 10 cycles per day. One complete cycle of door operation is defined as when the door is in the closed position, moves to the full open position, and returns to the closed position.

1.3 SUBMITTALS

Government approval is required for submittals with a "GA" designation; submittals having an "FIO" designation are for information only. The following shall be submitted in accordance with Section 01330 SUBMITTAL PROCEDURES:

SD-01 Data

Overhead Rolling Door Unit; FIO.

Manufacturer's catalog data, test data, and summary of forces and loads on the walls/jambs.

SD-04 Drawings

Overhead Rolling Door Unit; FIO.

Drawings showing the location of each door including schedules. Drawings shall include elevations of each door type, details and method of anchorage, details of construction, location and installation of hardware, shape and thickness of materials, details of joints and connections, and details of guides, power operators, controls, and other fittings.

SD-06 Instructions

Overhead Rolling Door Unit; FIO.

Manufacturer's preprinted installation instructions.

SD-09 Reports

Tests; FIO.

Written record of fire door drop test.

SD-13 Certificates

Fire Doors; FIO.

Oversize labels or certificates stating that the overhead rolling doors conform to requirements of this section. Certificates for oversize fire doors stating that the doors and hardware are manufactured in compliance with the requirements for doors of this type and class and have been tested and meet the requirements for the class indicated. Certificate is not required when fire door has a listing agency label or oversize label on the door bottom bar.

SD-14 Samples

Overhead Rolling Door Unit; FIO.

Manufacturer's standard color samples of factory applied finishes.

SD-19 Operation and Maintenance Manuals

Operation Manual; FIO.

Maintenance and Repair Manual ; FIO.

Six copies of the system operation manual for each type of door and control system.

1.4 DELIVERY AND STORAGE

Doors shall be delivered to the jobsite wrapped in a protective covering with the brands and names clearly marked thereon. Doors shall be stored in a dry location that is adequately ventilated and free from dirt and dust, water, and other contaminants, and in a manner that permits easy access for inspection and handling.

1.5 WARRANTY

Manufacturer's standard performance guarantees or warranties that extend beyond a 1-year period shall be provided.

1.6 OPERATION AND MAINTENANCE MANUALS

Operating instructions outlining the step-by-step procedures required for motorized door and shutter operation for the overhead rolling door unit shall be provided. The instructions shall include the manufacturer's name, model number, service manual, parts list, and brief description of all equipment and their basic operating features. Maintenance instructions listing routine maintenance procedures, possible breakdowns and repairs, troubleshooting guides, and simplified diagrams for the equipment as installed shall be provided. A complete list of parts and supplies, source of supply, and a list of the high mortality maintenance parts shall be provided.

1.7 DOOR HARDWARE

Door manufacturer shall provide all hardware for a complete assembly, SEE SECTION 08700 BUILDERS' HARDWARE.

PART 2 PRODUCTS

2.1 OVERHEAD ROLLING DOORS

Doors shall be surface-mounted type with guides at jambs set back a sufficient distance to clear the opening. Exterior doors shall be mounted as indicated.

2.1.1 Curtains

The curtains shall roll up on a barrel supported at the head of opening on brackets, and shall be balanced by helical torsion springs. Steel slats for doors less than 4.5 m wide shall be minimum bare metal thickness of 0.85 mm. .Steel slats for doors from 4.5 m to 6.3 m wide shall be minimum bare metal thickness of 1.0 mm. .Steel slats for doors 6.3 m wide and wider shall be minimum bare metal thickness of 1.3 mm. . Slats shall be of the minimum bare metal decimal thickness required for the width indicated and the wind pressure specified above.

2.1.1.1 Insulated Curtains

The slat system shall supply a minimum Rsi-value of .69 when calculated in accordance with ASHRAE-03. Slats shall be of the flat type as standard with the manufacturer. Slats shall consist of a urethane core not less than 17 mm thick, completely enclosed within metal facings. Exterior face of slats shall be gauge as specified for curtains. Interior face shall be not lighter than 0.70 mm. The insulated slat assembly shall have a flame spread rating of not more than 25 and a smoke development factor of not more than 50 when tested in accordance with ASTM E 84.

2.1.2 Endlocks and Windlocks

The ends of each alternate slat for interior doors shall have steel endlocks of manufacturer's stock design.

2.1.3 Bottom Bar

The curtain shall have a standard bottom bar consisting of two hot-dip galvanized steel angles for steel doors. A sensing edge shall be attached to the bottom bar of doors .

2.1.4 Guides

Guides shall be steel structural shapes or formed steel shapes, of a size and depth to provide proper clearance for operation and resistance under the design windload. Guides shall be attached to adjoining construction with fasteners recommended by the manufacturer. Spacing of fasteners shall be as required to meet the minimum design windload. Doors and guides in hazardous areas shall have static grounding.

2.1.5 Barrel

The barrel shall be steel pipe or commercial welded steel tubing of proper diameter for the size of curtain. Deflection shall not exceed 2.5 mm per meter of span. Ends of the barrel shall be closed with metal plugs, machined to fit the pipe. Aluminum plugs are acceptable on non-fire door barrels.

2.1.6 Springs

Oil tempered helical steel counter-balance torsion springs shall be installed within the barrel and shall be capable of producing sufficient

torque to assure easy operation of the door curtain. Access shall be provided for spring tension adjustment from outside of the bracket without removing the hood.

2.1.7 Brackets

Brackets shall be of steel plates to close the ends of the roller-shaft housing, and to provide mounting surfaces for the hood. An operation bracket hub and shaft plugs shall have sealed prelubricated ball bearings.

2.1.8 Hoods

Hoods shall be steel with minimum bare metal thickness of 0.70 mm formed to fit contour of the end brackets, and shall be reinforced with steel rods, rolled beads, or flanges at top and bottom edges. Multiple segment and single piece hoods shall be provided with support brackets of the manufacturer's standard design as required for adequate support.

2.1.9 Weatherstripping

Exterior doors shall be fully weatherstripped. A compressible and replaceable weather seal shall be attached to the bottom bar. Weather seal at door guides shall be continuous vinyl or neoprene, bulb or leaf type, or shall be nylon-brush type. A weather baffle shall be provided at the lintel or inside the hood. Weatherstripping shall be easily replaced without special tools.

2.1.10 Slat Openings

2.1.11 Operation

Doors shall be operated by means of electric power with auxiliary chain hoist. Equipment shall be designed and manufactured for usage in non-hazardous areas.

2.1.11.1 Electric Power Operator With Auxiliary Chain Hoist Operation

Electric power operators shall be heavy-duty industrial type. The unit shall operate the door through the operational cycle life specified. The electric power operator shall be complete with electric motor, auxiliary operation, necessary means of reduction, brake, mounting brackets, push button controls, limit switches, magnetic reversing starter, and all other accessories necessary to operate components specified in other paragraphs of this section. The operator shall be so designed that the motor may be removed without disturbing the limit-switches settings and without affecting the emergency chain operator. Doors shall be provided with an auxiliary operator for immediate emergency manual operation of the door in case of electrical failure. Auxiliary operation shall be by means of galvanized endless chain extending to within 900 mm of the floor. The emergency manual operating mechanism shall be so arranged that it may be operated from the floor without affecting the settings of the limit switches. A mechanical device shall be included that will disconnect the motor from the drive operating mechanism when the auxiliary operator is used. Where control voltages differ from motor voltage, a control voltage transformer shall be provided in and as part of the electric power operator system. Control voltage shall not exceed 120 volts.

a. Motors: Drive motors shall conform to NEMA MG 1, shall be high-starting torque, reversible type, and shall be of sufficient wattage

and torque output to move the door in either direction from any position at a speed range of 0.23 m per second (6 to 8 inches per second) without exceeding the rated capacity. Motors shall be suitable for operation on 120/208 volts, 60 hertz, 3- phase current and shall be suitable for across-the-line starting. Motors shall be designed to operate at full capacity over a supply voltage variation of plus or minus 10 percent of the motor voltage rating. Motors shall be provided with overload protection.

b. Controls: Control equipment shall conform to NEMA ICS 2. Enclosures shall conform to NEMA ICS 6, Type 12 (industrial use), . Exterior control stations shall be weatherproof key-operated type with corrosion-resistant cast-metal cover. Each control station shall be of the three position button type, marked "OPEN," "CLOSE," and "STOP." The "OPEN" and "STOP" controls shall be of the momentary contact type with seal-in contact. The "CLOSE" control shall be of the momentary contact type. When the door is in motion and the "STOP" control is pressed, the door shall stop instantly and remain in the stop position; from the stop position, the door shall be operable in either direction by the "OPEN" or "CLOSE" controls. Controls shall be of the full-guarded type to prevent accidental operation. Readily adjustable limit switches shall be provided to automatically stop the doors at their fully open and closed positions.

c. Sensing Edge Device: The bottom edge of electric power operated doors shall have a pneumatic sensing edge for non-hazardous areas that will reverse the door movement upon contact with an obstruction and cause the door to return to its full open position. The sensing edge shall not substitute for a limit switch. Exterior doors shall be provided with a combination compressible weather seal and sensing edge.

d. Electrical Work: Conduit and wiring necessary for proper operation shall be provided under Section 16415 ELECTRICAL WORK, INTERIOR. Flexible connections between doors and fixed supports shall be made with flexible type SJO cable as appropriate. The cable shall have a spring-loaded automatic take up reel or a coil cord equivalent device.

2.1.12 Inertia Brake

Overhead rolling door shall have a mechanical inertia brake device which will stop the door from free fall in any position, should there be a failure in the motor operator brake or roller chain drive. The unit shall be capable of being reset with a back drive action.

2.1.13 Locking

Locking for motor operated doors shall consist of self-locking gearing with chain lock for emergency hand chain.

2.1.14 Finish

Steel slats and hoods shall be hot-dip galvanized G60 in accordance with ASTM A 653, and shall be treated for paint adhesion and shall receive a factory baked-on finish coat. The paint system shall withstand a minimum of 1500 hours without blistering, bubbling, or rust. Surfaces other than slats, hood, and faying surfaces shall be cleaned and treated to assure maximum paint adherence and shall be given a factory dip or spray coat of

rust inhibitive metallic oxide or synthetic resin primer. Color shall be as indicated on the color schedule on the drawings.

PART 3 EXECUTION

3.1 INSTALLATION

Doors shall be installed in accordance with approved detail drawings and manufacturer's instructions. Anchors and inserts for guides, brackets, motors,switches, hardware, and other accessories shall be accurately located. Upon completion, doors shall be free from warp, twist, or distortion. Doors shall be lubricated, properly adjusted, and demonstrated to operate freely. Fire doors shall be installed in conformance with the requirements of NFPA 80 and the manufacturer's instructions.

-- End of Section --

SECTION TABLE OF CONTENTS

DIVISION 08 - DOORS & WINDOWS

SECTION 08520

ALUMINUM WINDOWS

PART 1 GENERAL

1.1 REFERENCES
1.2 WINDOW PERFORMANCE
1.2.1 Structural Performance
1.2.2 Air Infiltration
1.2.3 Water Penetration
1.3 SUBMITTALS
1.4 QUALIFICATION
1.5 DELIVERY AND STORAGE
1.6 WARRANTY

PART 2 PRODUCTS

2.1 ALUMINUM WINDOW TYPES
2.1.1 Horizontal-Sliding Windows
2.2 WEATHERSTRIPPING
2.3 INSECT SCREENS
2.4 ACCESSORIES
2.4.1 Fasteners
2.4.2 Hardware
2.4.3 Window Anchors
2.5 GLASS AND GLAZING
2.6 FINISH
2.6.1 Anodized Aluminum Finish
2.6.2 Color

PART 3 EXECUTION

3.1 INSTALLATION
3.2 ADJUSTMENTS AND CLEANING
3.2.1 Hardware Adjustments
3.2.2 Cleaning

-- End of Section Table of Contents --

SECTION 08520

ALUMINUM WINDOWS

PART 1 GENERAL

1.1 REFERENCES

The publications listed below form a part of this specification to the extent referenced. The publications are referred to in the text by basic designation only.

ALUMINUM ASSOCIATION (AA)

AA DAF-45	(1980) Designation System for Aluminum Finishes

AMERICAN ARCHITECTURAL MANUFACTURERS ASSOCIATION (AAMA)

AAMA 101	(1993) Voluntary Specifications for Aluminum and Poly(Vinyl Chloride) (PVC) Prime Windows and Glass Doors
AAMA 1503.1	(1988) Voluntary Test Method for Thermal Transmittance and Condensation Resistance of Windows, Doors and Glazed Wall Sections

AMERICAN SOCIETY FOR TESTING AND MATERIALS (ASTM)

ASTM E 283	(1991) Determining the Rate of Air Leakage Through Exterior Windows, Curtain Walls, and Doors Under Specified Pressure Differences Across the Specimen
ASTM E 330	(1990) Structural Performance of Exterior Windows, Curtain Walls, and Doors by Uniform Static Air Pressure Difference
ASTM E 547	(1993) Water Penetration of Exterior Windows, Curtain Walls, and Doors by Cyclic Static Air Pressure Differential

INSECT SCREENING WEAVERS ASSOCIATION (ISWA)

ISWA IWS 089	(1990) Recommended Standards and Specifications for Insect Wire Screening (Wire Fabric)

SCREEN MANUFACTURERS ASSOCIATION (SMA)

SMA 1004	(1987) Aluminum Tubular Frame Screens for Windows

1.2 WINDOW PERFORMANCE

Aluminum windows shall be designed to meet the following performance

requirements. Testing requirements shall be performed by an independent testing laboratory or agency.

1.2.1 Structural Performance

Structural test pressures on window units shall be for positive load (inward) and negative load (outward) in accordance with ASTM E 330. After testing, there shall be no glass breakage, permanent damage to fasteners, hardware parts, support arms or actuating mechanisms or any other damage which could cause window to be inoperable. There shall be no permanent deformation of any main frame, sash or ventilator member in excess of the requirements established by AAMA 101 for the window types and classification specified in this section.

1.2.2 Air Infiltration

Air infiltration shall not exceed the amount established by AAMA 101for each window type when tested in accordance with ASTM E 283.

1.2.3 Water Penetration

Water penetration shall not exceed the amount established by AAMA 101for each window type when tested in accordance with ASTM E 547.

1.3 SUBMITTALS

Government approval is required for submittals with a "GA" designation; submittals having an "FIO" designation are for information only. The following shall be submitted in accordance with Section 01330 SUBMITTAL PROCEDURES:

SD-01 Data

Aluminum Windows; FIO.

Manufacturer's descriptive data and catalog cut sheets.

SD-04 Drawings

Aluminum Windows; FIO. Insect Screens; FIO.

Drawings indicating elevations of window, rough-opening dimensions for each type and size of window, full-size sections, thicknesses of metal, fastenings, methods of installation and anchorage, connections with other work, type of wall construction, size and spacing of anchors, method of glazing, types and locations of operating hardware, mullion details, weatherstripping details, screen details including method of attachment, and window schedules showing locations of each window type.

SD-06 Instructions

Aluminum Windows; FIO.

Manufacturer's preprinted installation instructions and cleaning instructions.

SD-09 Reports

Aluminum Windows; FIO.

Reports for each type of aluminum window attesting that identical windows have been tested and meet all performance requirements established under paragraph WINDOW PERFORMANCE.

SD-13 Certificates

Aluminum Windows; FIO.

Certificates stating that the aluminum windows are AAMA certified conforming to requirements of this section. Labels or markings permanently affixed to the window will be accepted in lieu of certificates.

SD-14 Samples

Aluminum Windows; FIO.

Manufacturer's standard color samples of the specified finishes.

1.4 QUALIFICATION

Window manufacturer shall specialize in designing and manufacturing the type of aluminum windows specified in this section, and shall have a minimum of 2 years of documented successful experience. Manufacturer shall have the facilities capable of meeting contract requirements, single-source responsibility and warranty.

1.5 DELIVERY AND STORAGE

Aluminum windows shall be delivered to project site and stored in accordance with manufacturer's recommendations. Damaged windows shall be replaced with new windows.

1.6 WARRANTY

Manufacturer's standard performance guarantees or warranties that extend beyond a 1 year period shall be provided.

PART 2 PRODUCTS

2.1 ALUMINUM WINDOW TYPES

Aluminum windows shall consist of complete units including sash, glass, frame, weatherstripping, and hardware. Windows shall conform to AAMA 101. Windows shall be double-glazed and shall have a minimum condensation resistance factor of 45 when tested in accordance with AAMA 1503.1. Operable windows shall permit cleaning the outside glass from inside the building.

2.1.1 Horizontal-Sliding Windows

Aluminum horizontal windows shall conform to AAMA 101 HS-C20 type consisting of sliding sash and fixed lite. Sash guides shall be nylon wheels.

2.2 WEATHERSTRIPPING

Weatherstripping for ventilating sections shall be of type designed to meet water penetration and air infiltration requirements specified in this

section in accordance with AAMA 101, and shall be manufactured of material compatible with aluminum and resistant to weather. Weatherstrips shall be factory-applied and easily replaced in the field. Neoprene or polyvinylchloride weatherstripping are not acceptable where exposed to direct sunlight.

2.3 INSECT SCREENS

Insect screens shall be aluminum window manufacturer's standard design, and shall be provided where scheduled on drawings. Insect screens shall be fabricated of roll-formed tubular-shaped aluminum frames conforming to SMA 1004 and (18 x 16) aluminum mesh screening conforming with ISWA IWS 089, Type III.

2.4 ACCESSORIES

2.4.1 Fasteners

Fastening devices shall be window manufacturer's standard design made from aluminum, non-magnetic stainless steel, cadmium-plated steel, nickel/chrome-plated steel or magnetic stainless steel in compliance with AAMA 101. Self-tapping sheet metal screws will not be acceptable for material thicker than 2 mm (1/16 inch).

2.4.2 Hardware

Hardware shall be as specified for each window type and shall be fabricated of aluminum, stainless steel, cadmium-plated steel, zinc-plated steel or nickel/chrome-plated steel of quality established by AAMA 101.

2.4.3 Window Anchors

Anchoring devices for installing windows shall be made of aluminum, cadmium-plated steel, stainless steel, or zinc-plated steel conforming to AAMA 101.

2.5 GLASS AND GLAZING

Aluminum windows shall be designed for inside glazing, field glazing, and for glass types scheduled on drawings and specified in Section 08810GLASS AND GLAZING. Units shall be complete with glass and glazing provisions to meet AAMA 101. Glazing material shall be compatible with aluminum, and shall not require painting.

2.6 FINISH

2.6.1 Anodized Aluminum Finish

Exposed surfaces of aluminum windows shall be finished with anodic coating conforming to AA DAF-45: Architectural Class I, AA-M10-C22-A44, color anodic coating, 0.02 mm (0.7 mil) or thicker. Finish shall be free of scratches and other blemishes.

2.6.2 Color

Color shall be in accordance with the window schedule.

PART 3 EXECUTION

3.1 INSTALLATION

Aluminum windows shall be installed in accordance with approved shop drawings and manufacturer's published instructions. Aluminum surfaces in contact with dissimilar metals other than stainless steel, zinc, cadmium or small areas of white bronze, shall be protected from direct contact using protective materials recommended by AAMA 101. The completed window installation shall be watertight in accordance with Section 07920 JOINT SEALING. Glass and glazing shall be installed in accordance with requirements of this section and Section 08810 GLASS AND GLAZING.

3.2 ADJUSTMENTS AND CLEANING

3.2.1 Hardware Adjustments

Final operating adjustments shall be made after glazing work is complete. Operating sash or ventilators shall operate smoothly and shall be weathertight when in locked position.

3.2.2 Cleaning

Aluminum window finish and glass shall be cleaned on exterior and interior sides in accordance with window manufacturer's recommendations. Alkaline or abrasive agents shall not be used. Precautions shall be taken to avoid scratching or marring window finish and glass surfaces.

-- End of Section --

SECTION TABLE OF CONTENTS

DIVISION 08 - DOORS & WINDOWS

SECTION 08700

BUILDERS' HARDWARE

PART 1 GENERAL

1.1 REFERENCES
1.2 SUBMITTALS
1.3 PREDELIVERY CONFERENCE
1.4 DELIVERY, STORAGE, AND HANDLING
1.5 SPECIAL TOOLS
1.6 WARRANTY
1.7 OPERATION AND MAINTENANCE MANUALS

PART 2 PRODUCTS

2.1 GENERAL HARDWARE REQUIREMENTS
2.2 TEMPLATES
2.3 HINGES
2.3.1 Hinges for Reverse Bevel Doors with Locks
2.3.2 Contractor's Option
2.4 LOCKS AND LATCHES
2.4.1 Mortise Lock and Latchsets
2.4.2 Lock Cylinders (Mortise and Rim)
2.4.3 Lock Trim
2.5 EXIT DEVICES AND EXIT DEVICE ACCESSORIES
2.5.1 Exit Devices and Auxiliary Items
2.5.2 Automatic Flush Bolts
2.5.3 KEYING
2.5.4 DOOR CLOSING DEVICES
2.5.4.1 Surface Type Closers
2.5.4.2 ARCHITECTURAL DOOR TRIM
2.5.4.2.1 Door Protection Plates
2.7 Kick Plates
2.8 AUXILIARY HARDWARE
2.9 MISCELLANEOUS
2.9.2 Metal Thresholds
2.9.3 Rain Drips
2.9.4 Aluminum Housed Type Weatherseals
2.9.5 Key Control Storage System
2.10 FASTENINGS
2.11 FINISHES
2.12 HARDWARE FOR FIRE DOORS

PART 3 EXECUTION

3.1 APPLICATION
3.1.1 Hardware for Fire Doors and Smoke-Control Door Assemblies
3.1.2 Door-Closing Devices
3.1.3 Key Control Storage Systems
3.1.4 Kick Plates
3.1.5 Auxiliary Hardware

3.1.6 Thresholds
3.1.7 Rain Drips
3.1.8 Weatherseals
3.2 OPERATIONAL TESTS
3.3 HARDWARE SETS

-- End of Section Table of Contents --

SECTION 08700

BUILDERS' HARDWARE

PART 1 GENERAL

1.1 REFERENCES

The publications listed below form a part of this specification to the extent referenced. The publications are referred to in the text by basic designation only.

AMERICAN SOCIETY FOR TESTING AND MATERIALS (ASTM)

ASTM E 283	(1991) Determining the Rate of Air Leakage Through Exterior Windows, Curtain Walls and Doors Under Specified Pressure Differences Across the Specimen

BUILDERS HARDWARE MANUFACTURERS ASSOCIATION (BHMA)

BHMA-01	(Effective thru Jun 1995) Directory of Certified Locks & Latches
BHMA-02	(Effective thru Jul 1995) Directory of Certified Door Closers
BHMA-03	(Effective thru Jul 1996) Directory of Certified Exit Devices
BHMA ANSI/BHMA A156.1	(1988) Butts and Hinges
BHMA ANSI/BHMA A156.3	(1994) Exit Devices
BHMA ANSI/BHMA A156.4	(1992) Door Controls - Closers
BHMA ANSI/BHMA A156.5	(1992) Auxiliary Locks & Associated Products
BHMA ANSI/BHMA A156.6	(1994) Architectural Door Trim
BHMA ANSI/BHMA A156.7	(1988) Template Hinge Dimensions
BHMA ANSI/BHMA A156.13	(1994) Mortise Locks & Latches
BHMA ANSI/BHMA A156.16	(1989) Auxiliary Hardware

BHMA ANSI/BHMA A156.18	(1993) Materials and Finishes
BHMA ANSI/BHMA A156.21	(1989) Thresholds

DOOR AND HARDWARE INSTITUTE (DHI)

DHI-03	(1989) Keying Systems and Nomenclature
DHI-04	(1976) Recommended Locations for Builders' Hardware for Custom Steel Doors and Frames
DHI-05	(1990) Recommended Locations for Architectural Hardware for Standard Steel Doors and Frames
DHI-A115.IG	(1994) Installation Guide for Doors and Hardware

NATIONAL FIRE PROTECTION ASSOCIATION (NFPA)

NFPA 80	(1995) Fire Doors and Windows
NFPA 101	(1997) Safety to Life from Fire in Buildings and Structures
NFPA 105	(1993) Installation of Smoke-Control Door Assemblies

1.2 SUBMITTALS

Government approval is required for submittals with a "GA" designation; submittals having an "FIO" designation are for information only. The following shall be submitted in accordance with Section 01330 SUBMITTAL PROCEDURES:

SD-01 Data

Hardware and Accessories; GA.

Manufacturer's descriptive data, technical literature, catalog cuts, and installation instructions. Spare parts data for locksets, exit devices, closers, after approval of the detail drawings, and not later than 1 month prior to the date of beneficial occupancy. The data shall include a complete list of parts and supplies, with current unit prices and source of supply.

SD-07 Schedules

Hardware Schedule; FIO.

Hardware schedule listing all items to be furnished. The schedule shall include for each item: the quantities; manufacturer's name and catalog numbers; the ANSI number specified, sizes; detail information or catalog cuts; finishes; door and frame size and materials; location and hardware set identification cross-references to drawings; corresponding reference standard type number or function number from manufacturer's catalog if not covered by ANSI or BHMA; and list of abbreviations and template numbers.

Keying Schedule; GA.

Keying schedule developed in accordance with DHI-03, after the keying meeting with the user.

SD-13 Certificates

Hardware and Accessories; FIO.

The hardware manufacturer's certificates of compliance stating that the supplied material or hardware item meets specified requirements. Each certificate shall be signed by an official authorized to certify in behalf of the product manufacturer and shall identify quantity and date or dates of shipment or delivery to which the certificates apply. A statement that the proposed hardware items appear in BHMA-01, BHMA-02 and BHMA-03 directories of certified products may be submitted in lieu of certificates.

1.3 PREDELIVERY CONFERENCE

Upon approval of the Hardware Schedule, the construction Contractor shall arrange a conference with the hardware supplier, Contracting Officer and the using agency to determine keying system requirements. Location of the key control storage system, set-up and key identification labeling will also be determined.

1.4 DELIVERY, STORAGE, AND HANDLING

Hardware shall be delivered to the project site in the manufacturer's original packages. Each article of hardware shall be individually packaged in the manufacturer's standard commercial carton or container, and shall be properly marked or labeled to be readily identifiable with the approved hardware schedule. Each change key shall be tagged or otherwise identified with the door for which its cylinder is intended. Where double cylinder functions are used or where it is not obvious which is the key side of a door, appropriate instructions shall be included with the lock and on the hardware schedule. Manufacturer's printed installation instructions, fasteners, and special tools shall be included in each package.

1.5 SPECIAL TOOLS

Special tools, such as those supplied by the manufacturer, unique wrenches, and dogging keys, shall be provided as required to adjust hardware items.

1.6 WARRANTY

Manufacturer's standard performance guarantees or warranties that extend beyond a one year period shall be provided.

1.7 OPERATION AND MAINTENANCE MANUALS

Six complete copies of maintenance instructions listing routine maintenance procedures, possible breakdowns and repairs, and troubleshooting guides shall be provided. .

PART 2 PRODUCTS

2.1 GENERAL HARDWARE REQUIREMENTS

Hardware shall conform to the requirements specified herein and the HARDWARE SETS listing at the end of this section. Hardware set numbers correspond to the set numbers shown on the drawings.

2.2 TEMPLATES

Requirements for hardware to be mounted on metal doors or metal frames shall be coordinated between hardware manufacturer and door or frame manufacturer by use of templates and other information to establish location, reinforcement required, size of holes, and similar details. Templates of hinges shall conform to BHMA ANSI/BHMA A156.7.

2.3 HINGES

Hinges shall conform to BHMA ANSI/BHMA A156.1. Hinges used on metal doors and frames shall also conform to BHMA ANSI/BHMA A156.7. Except as otherwise specified, hinge sizes shall conform to the hinge manufacturer's printed recommendations.

2.3.1 Hinges for Reverse Bevel Doors with Locks

Hinges for reverse bevel doors with locks shall have pins that are made nonremovable by means such as a set screw in the barrel, or safety stud, when the door is in the closed position.

2.3.2 Contractor's Option

Hinges with antifriction bearings may be furnished in lieu of ball bearing hinges, except where prohibited for fire doors by the requirements of NFPA 80.

2.4 LOCKS AND LATCHES

To the maximum extent possible, locksets, latchsets and deadlocks shall be the products of a single manufacturer. Lock fronts for double-acting doors shall be rounded. Strikes for wood frames and pairs of wood doors shall be furnished with wrought boxes.

2.4.1 Mortise Lock and Latchsets

Mortise lock, latchsets, and strikes shall be series 1000 and shall conform to BHMA ANSI/BHMA A156.13, operational Grade 1. Strikes for security doors shall be rectangular without curved lip. Mortise type locks and latches for doors 44 mm thick and over shall have adjustable bevel fronts or otherwise conform to the shape of the door. Mortise locks shall have armored fronts.

2.4.2 Lock Cylinders (Mortise and Rim)

All locksets, lockable exit devices and padlocks shall comply with BHMA ANSI/BHMA A156.5. Lock cylinder shall have not less than six pins. Cylinders shall have key removable type cores. The cylinders shall be compatible with existing locks that were manufactured by Best,and have interchangeable cores.
Construction interchangeable cores shall be provided. Disassembly of lever or lockset shall not be required to remove core from lockset.All locksets and lockable exit devices shall accept same interchangeable cores. An "or" equal manufacturers locking system is acceptable. To be considered "equal" the new locks shall have interchangeable core, 6-pin tumblers, and the key and cores milled to match the existing Best keyway system.

2.4.3 Lock Trim

Lock trim shall be cast, forged, or heavy wrought construction of commercial plain design. In addition to meeting the test requirement of BHMA ANSI/BHMA A156.2 or BHMA ANSI/BHMA A156.13, lever handles, roses, and escutcheons shall be 1.27 mm thick, if unreinforced. If reinforced, the outer shell shall be 0.89 mm thick and the combined thickness shall be 1.78 mm except that knob shanks shall be 1.52 mm thick. Knob diameter shall be 54 to 57 mm. Lever handles shall be of plain design with ends returned to no more than 10 mm from the door face.

2.5 EXIT DEVICES AND EXIT DEVICE ACCESSORIES

Exit devices and exit device accessories shall conform to BHMA ANSI/BHMA A156.3, Grade 1.

2.5.1 Exit Devices and Auxiliary Items

Trim shall be of wrought construction and commercial plain design with straight, beveled, or smoothly rounded sides, corners, and edges. Adjustable strikes shall be provided for rim type and vertical rod devices. Open back strikes shall be provided for pairs of doors with mortise and vertical rod devices; except open back strikes shall be used on labeled doors only where specifically provided for in the published listings. Touch barsshall be provided in lieu of conventional crossbars and arms. Escutcheons shall be provided not less than 175 by 55 mm. Escutcheons shall be cut to suit cylinders and operating trim.

2.5.2 Automatic Flush Bolts

Automatic flush bolts shall be Type 25 in accordance with BHMA ANSI/BHMA A156.3, and shall be installed at the top and bottom of the inactive leaf of pairs of fire rated doors where specified in the hardware sets. Flush bolts shall be mortised in the strike edge of the door.

2.5.3 KEYING

Locks shall be keyed in sets or subsets as scheduled. Locks shall be furnished with the manufacturer's standard construction key system. Change keys for locks shall be stamped with change number and the inscription "U.S. Property - Do Not Duplicate." Keys shall be supplied as follows:

Locks: 3 change keys each lock.

The keys shall be furnished to the Contracting Officer arranged for key control system storage in sets or subsets as scheduled.

2.5.4 DOOR CLOSING DEVICES

Door closing devices shall conform to BHMA ANSI/BHMA A156.4, Grade 1. Closing devices shall be products of one manufacturer for each type specified. The opening resistance of closing devices shall not exceed 67 N applied at the latch stile or exceed 22 N where low opening resistance is scheduled.

2.5.4.1 Surface Type Closers

Surface type closers shall be Grade 1, Series C02000 Full Cover] with options PT-4H, Size 1 or 2 through Size 6, and PT-4D with back check position valve. Except as otherwise specified, sizes shall conform to the manufacturer's published recommendations. Closers for outswinging exterior doors shall have parallel arms or shall be top jamb mounted. Closers for doors close to a wall shall be of narrow projection so as not to strike the wall at the 90-degree open position.

2.5.4.2 ARCHITECTURAL DOOR TRIM

Architectural door trim shall conform to BHMA ANSI/BHMA A156.6.

2.5.4.2.1 Door Protection Plates

2.7 Kick Plates

Kick plates shall be J102 stainless steel. Width of plates shall be 50 mm less than door width for single doors and 25 mm less for pairs of doors. Height shall be 400 mm, except where the bottom rail is less than 400 mm the plate shall extend to within 13 mm of the panel mold or glass bead. Edges of metal plates shall be beveled.

2.8 AUXILIARY HARDWARE

Auxiliary hardware, consisting of door holders, door stops, , shall conform to BHMA ANSI/BHMA A156.16. Lever extension flush bolts shall be Type L14081.Dust-proof strikes shall be Type L04011 for doors that are not fire rated. Dust-proof strikes shall be Type L04021 for fire rated doors. .

2.9 MISCELLANEOUS

2.9.2 Metal Thresholds

Thresholds shall conform to BHMA ANSI/BHMA A156.21. Thresholds for exterior doors shall be extruded aluminum of the type indicated and shall provide proper clearance and an effective seal with specified weather stripping. Where required, thresholds shall be modified to receive projecting bolts of flush boltsand exit devices.
Thresholds for doors accessible to the handicapped shall be beveled with slopes not exceeding 1:2 and with heights not exceeding 13 mm.] [Air leakage rate of weatherstripping shall not exceed 0.775 liters per second per lineal meter of crack when tested in accordance with ASTM E 283 at standard test conditions.

2.9.3 Rain Drips

Extruded aluminum, not less than 1.78 mm thick, painted. Door sill rain drips shall be 38 mm to 44 mm high by 16 mm projection. Overhead rain drips shall be approximately 38 mm high by 63 mm projection and shall extend 50 mm on either side of the door opening width.

2.9.4 Aluminum Housed Type Weatherseals

Weatherseals of the type indicated shall consist of extruded aluminum retainers not less than 1.78 mm wall thickness with vinyl, neoprene, silicone rubber, polyurethane or vinyl brush inserts. Aluminum shall be bronze anodized. Weatherseal material shall be of an industrial/commercial grade. Seals shall remain functional through all weather and temperature conditions. Air leakage rate of weatherstripping shall not exceed 0.775 liters per second per lineal meter of crack when tested in accordance with ASTM E 283 at standard test conditions.

2.9.5 Key Control Storage System

Key control storage system shall conform to BHMA ANSI/BHMA A156.5, Type and capacity shall be properly labeled for key identification. Set up, identification labeling and location of the key control storage shall be as directed at the Predelivery Conference.

2.10 FASTENINGS

Fastenings of proper type, size, quantity, and finish shall be supplied with each article of hardware. Machine screws and expansion shields shall be used for attaching hardware to concrete or masonry. Fastenings exposed to the weather in the finished work shall be of brass, bronze, or stainless steel. Sex bolts, through bolts, or machine screws and grommet nuts, where used on reverse-bevel exterior doors equipped with half-surface or full-surface hinges, shall employ one-way screws or other approved tamperproof screws. Screws for the jamb leaf of half-mortise and full-surface hinges attached to structural steel frames shall be one-way or other approved tamperproof type.

2.11 FINISHES

Unless otherwise specified, finishes shall conform to those identified in BHMA ANSI/BHMA A156.18. Where painting of primed surfaces is required, painting is specified in Section 09900 PAINTING, GENERAL.

2.12 HARDWARE FOR FIRE DOORS

Hardware for fire doors shall conform to the requirements of NFPA 80and NFPA 101.

PART 3 EXECUTION

3.1 APPLICATION

Hardware shall be located in accordance with DHI-04 and DHI-05, except that deadlocks shall be mounted 1220 mm above finish floor. When approved, slight variations in locations or dimensions will be permitted. Application shall be in accordance with DHI-A115.IG or DHI A115-W. Door control devices for exterior doors such as closers and holders, shall be attached to doors with thru bolts and nuts or sex bolts. Alternate fastening methods may be approved by the Contracting Officer when

manufacturers' documentation is submitted to verify that the fastening devices and door reinforcements are adequate to resist wind induced stresses. Electric hardware items and access control devices shall be installed in accordance with manufacturer's printed installation procedures.

3.1.1 Hardware for Fire Doors and Smoke-Control Door Assemblies

Hardware for fire doors shall be installed in accordance with the requirements of NFPA 80. Exit devices installed on fire doors shall have a visible label bearing the marking "Fire Exit Hardware". Other hardware installed on fire doors, such as locksets, closers, and hinges shall have a visible label or stamp indicating that the hardware items have been approved by an approved testing agency for installation on fire-rated doors. Hardware for smoke-control door assemblies shall be installed in accordance with NFPA 105.

3.1.2 Door-Closing Devices

Door-closing devices shall be installed and adjusted in accordance with the templates and printed instructions supplied by the manufacturer of the devices. Insofar as practicable, doors opening to or from halls and corridors shall have the closer mounted on the room side of the door.

3.1.3 Key Control Storage Systems

Key control storage system shall be [installed where directed] [furnished to the Contracting Officer].

3.1.4 Kick Plates

Kick plates shall be installed on the push side of single-acting doors and on both sides of double-acting doors. .

3.1.5 Auxiliary Hardware

Lever extension flush bolts shall be installed at the top and bottom of the inactive leaf of pairs of doors. The bottom bolt shall operate into a dust-proof floor strike or threshold.

3.1.6 Thresholds

Thresholds shall be secured with a minimum of three fasteners per single door width and six fasteners per double door width with a maximum spacing of 300 mm. Exterior thresholds shall be installed in a bed of sealant with expansion anchors and stainless steel screws, except that bronze or anodized bronze thresholds shall be installed with expansion anchors with brass screws. Minimum screw size shall be No. 10 length, dependent on job conditions, with a minimum of 19 mm thread engagement into the floor or anchoring device used.

3.1.7 Rain Drips

Door sill rain drips shall align with the bottom edge of the door. Overhead rain drips shall align with bottom edge of door frame rabbet. Drips shall be set in sealant and fastened with stainless steel screws.

3.1.8 Weatherseals

Weatherseals shall be located as indicated, snug to door face and fastened

in place with color matched metal screws after door and frames have been finish painted. Screw spacing shall be as recommended by manufacturer.

3.2 OPERATIONAL TESTS

Prior to acceptance of any electrical hardware system, an operational test shall be performed to determine if devices are operating as intended by the specifications. Wiring shall be tested for correct voltage, current carrying capacity, and proper grounding. Stray voltages in lock wiring shall be eliminated to prevent locking devices from releasing in critical situations.

3.3 HARDWARE SETS

FINISH	**FINISH DESCRIPTION / BASE METAL**
600	**PRIMED FOR PAINTING / STEEL**
630	**SATIN STAINLESS STEEL**
646	**SATIN NICKEL / STEEL**

HW-1

3 EA.	HINGES, A5111	630
1 EA.	CLOSER C2011 (PAINT TO MATCH ADJACENT DOOR FRAME)	600
1 EA.	LOCKSET, F04 (W/LEVER HANDLES)	646
1 EA.	METAL RAIN DRIP	600
1 EA.	SWEEP SEAL	600
1 EA.	METAL THRESHOLD, J32100	BRONZE
1 EA.	DOOR STOP, L02131	646

HW-2

6 EA.	HINGES, A5111	630
2 EA.	LEVER EXTENSION FLUSH BOLTS,L04181 (AT INACTIVE DOOR)	646
2 EA.	DUSTPROOF STRIKES, L04011	646
1 EA.	LOCKSET, F04 (W/LEVER HANDLES)	646
1 EA.	METAL RAIN DRIP	600
2 EA.	SWEEP SEAL	600
1 EA.	METAL THRESHOLD, J32100	BRONZE

HW-3

3 EA.	HINGES, A5111	630
1 EA.	LOCKSET, F04 (W/LEVER HANDLES)	646
1 EA.	DOOR STOP, L02131	646

HW-4

3 EA.	HINGES, A5111	630
1 EA.	CLOSER, C2011 (PAINT TO MATCH ADJACENT DOOR FRAME)	600
1 EA.	LOCKSET, F04 (W/LEVER HANDLES)	646
1 EA.	DOOR STOP, L02131	646

HW-5

NOT USED

HW-6

ALL HARDWARE FOR A COMPLETE DOOR ASSEMBLY SHALL BE PROVIDED BY THE OVERHEAD ROLLING DOOR MANUFACTURER.
(TO INCLUDE RAIN DRIP, WEATHER STRIPPING, LOCK, ETC.)

HW-7

3 EA.	HINGES, A5111	630
1 EA.	CLOSER C2021 (PAINT TO MATCH ADJACENT DOOR FRAME)	600
1 EA.	LOCKSET, F04 (W/LEVER HANDLES)	646
1 EA.	METAL RAIN DRIP	600
1 EA.	SWEEP SEAL	600
1 EA.	METAL THRESHOLD, J32100	BRONZE
1 EA.	DOOR STOP, L02131	646

-- End of Section --

SECTION TABLE OF CONTENTS

DIVISION 08 - DOORS & WINDOWS

SECTION 08810

GLASS AND GLAZING

PART 1 GENERAL

1.1 REFERENCES
1.2 SUBMITTALS
1.3 SYSTEM DESCRIPTION
1.4 DELIVERY, STORAGE AND HANDLING
1.5 PROJECT/SITE CONDITIONS
1.6 WARRANTY
1.6.1 Insulating Glass

PART 2 PRODUCTS

2.1 INSULATING GLASS
2.1.1 Reflective Insulating Glass
2.2 MIRRORS
2.2.1 Glass Mirrors
2.2.2 Mirror Accessories
2.2.2.1 Mastic
2.2.2.2 Mirror Frames
2.2.2.3 Mirror Clips
2.3 GLAZING ACCESSORIES
2.3.1 Preformed Tape
2.3.2 Sealant
2.3.3 Glazing Gaskets
2.3.3.1 Fixed Glazing Gaskets
2.3.3.2 Wedge Glazing Gaskets
2.3.3.3 Aluminum Framing Glazing Gaskets
2.3.4 Putty and Glazing Compound
2.3.5 Setting and Edge Blocking

PART 3 EXECUTION

3.1 PREPARATION
3.2 INSTALLATION
3.3 CLEANING
3.4 PROTECTION

-- End of Section Table of Contents --

SECTION 08810

GLASS AND GLAZING

PART 1 GENERAL

1.1 REFERENCES

The publications listed below form a part of this specification to the extent referenced. The publications are referred to in the text by basic designation only.

AMERICAN NATIONAL STANDARDS INSTITUTE (ANSI)

ANSI Z97.1	(1984; R 1994) Safety Performance Specifications and Methods of Test for Safety Glazing Materials Used in Buildings

AMERICAN SOCIETY FOR TESTING AND MATERIALS (ASTM)

ASTM C 509	(1994) Elastomeric Cellular Preformed Gasket and Sealing Material
ASTM C 669	(1995) Glazing Compounds for Back Bedding and Face Glazing of Metal Sash
ASTM C 864	(1993) Dense Elastomeric Compression Seal Gaskets, Setting Blocks, and Spacers
ASTM C 920	(1995) Elastomeric Joint Sealants
ASTM C 1036	(1991) Flat Glass
ASTM D 395	(1989; R 1994) Rubber Property - Compression Set
ASTM E 773	(1988) Seal Durability of Sealed Insulating Glass Units
ASTM E 774	(1992) Sealed Insulating Glass Units
ASTM E 1300	(1994) Determining the Minimum Thickness and Type of Glass Required to Resist a Specified Load

COMMERCIAL ITEM DESCRIPTION (CID)

CID A-A-378	(Basic) Putty: Linseed Oil Type, (for Wood-Sash-Glazing)

GLASS ASSOCIATION OF NORTH AMERICA (GANA)

GANA-01	(1990) Glazing Manual

NATIONAL FIRE PROTECTION ASSOCIATION (NFPA)

NFPA 80	(1995) Fire Doors and Fire Windows

1.2 SUBMITTALS

Government approval is required for submittals with a "GA" designation; submittals having an "FIO" designation are for information only. The following shall be submitted in accordance with Section 01330 SUBMITTAL PROCEDURES:

SD-01 Data

Glass; FIO. Glazing Accessories; FIO.

Manufacturer's descriptive product data, handling and storage recommendations, installation instructions, and cleaning instructions.

SD-04 Drawings

Glazing Materials and Accessories; FIO.

Drawings showing complete details of the proposed setting methods, mullion details, edge blocking, size of openings, frame details, materials, and types and thickness of glass.

SD-13 Certificates

Glass; FIO.

Certificates stating that the glass meets the specified requirements. Labels or manufacturers marking affixed to the glass will be accepted in lieu of certificates.

SD-14 Samples

Glass; FIO.

Two 203 x 254 mm samples of each of the following: insulating glass units.

1.3 SYSTEM DESCRIPTION

Glazing systems shall be fabricated and installed watertight and airtight to withstand thermal movement and wind loading without glass breakage, gasket failure, deterioration of glazing accessories, and defects in the work. Glazed panels shall comply with the safety standards, as indicated in accordance with ANSI Z97.1. Glazed panels shall comply with indicated wind/snow loading in accordance with ASTM E 1300.

1.4 DELIVERY, STORAGE AND HANDLING

Glazing compounds shall be delivered to the site in the manufacturer's unopened containers. Glass shall be stored indoors in a safe, well ventilated dry location in accordance with manufacturer's instructions, and shall not be unpacked until needed for installation. Glass shall not be stored on site over 1 month.

1.5 PROJECT/SITE CONDITIONS

Glazing work shall not be started until outdoor temperature is above 5 degrees C and rising, unless procedures recommended by glass manufacturer and approved by Contracting Officer are made to warm the glass and rabbet surfaces. Ventilation shall be provided to prevent condensation of moisture on glazing work during installation. Glazing work shall not be

performed during damp or raining weather.

1.6 WARRANTY

1.6.1 Insulating Glass

Manufacturer shall warrant the insulating glass to be free of fogging or film formation on the internal glass surfaces caused by failure of the hermetic seal for a period of 10 years from Date of Substantial Completion. Warranty shall be signed by manufacturer.

PART 2 PRODUCTS

2.1 INSULATING GLASS

Insulating glass shall be Class A preassembled units of dual-seal construction consisting of lites of glass separated by an aluminum spacer and dehydrated space conforming to ASTM E 773 and ASTM E 774. Aluminum spacer shall be roll-formed, with bent or tightly soldered joints to completely seal the spacer periphery and eliminate moisture and hydrocarbon vapor transmission into airspace through the corners. Primary seal shall be compressed polyisobutylene and the secondary seal shall be a specially formulated silicone. Glass types shall be as follows:

2.1.1 Reflective Insulating Glass

Interior and exterior glass panes for reflective insulating units shall be Type I annealed flat glass, Class 2-tinted, Quality q3 - glazing select, conforming to ASTM C 1036. Glass performance shall be K-Value/Winter Nighttime 6.19, shading coefficient 0.66. Color shall be as shown in the Window Schedule.

2.2 MIRRORS

2.2.1 Glass Mirrors

Glass for mirrors shall be Type I transparent flat type, Class 1-clear, Glazing Quality q1 6 mm (1/4 inch) thick conforming to ASTM C 1036. Glass color shall be clear. Glass shall be coated on one surface with silver coating, copper protective coating, and mirror backing paint. Silver coating shall be highly adhesive pure silver coating of a thickness which shall provide reflectivity of 83 percent or more of incident light when viewed through 6 mm (1/4 inch) thick glass, and shall be free of pinholes or other defects. Copper protective coating shall be pure bright reflective copper, homogeneous without sludge, pinholes or other defects, and shall be of proper thickness to prevent "adhesion pull" by mirror backing paint. Mirror backing paint shall consist of two coats of special scratch and abrasion-resistant paint , and shall be baked in uniform thickness to provide a protection for silver and copper coatings which will permit normal cutting and edge fabrication.

2.2.2 Mirror Accessories

2.2.2.1 Mastic

Mastic for setting mirrors shall be a polymer type mirror mastic resistant to water, shock, cracking, vibration and thermal expansion. Mastic shall be compatible with mirror backing paint, and shall be approved by mirror manufacturer.

2.2.2.2 Mirror Frames

Mirrors shall be provided with mirror frames (J-mold channels) fabricated of one-piece roll-formed Type 304 stainless steel with No. 4 brushed satin finish and concealed fasteners which will keep mirrors snug to wall. Frames shall be 32 x 6 x 6 mm (1-1/4 x 1/4 x 1/4 inch) continuous at top and bottom of mirrors. Concealed fasteners of type to suit wall construction material shall be provided with mirror frames.

2.2.2.3 Mirror Clips

Concealed fasteners of type to suit wall construction material shall be provided with clips.

2.3 GLAZING ACCESSORIES

2.3.1 Preformed Tape

Preformed tape shall be elastomeric rubber extruded into a ribbon of a width and thickness suitable for specific application. Tape shall be of type which will remain resilient, have excellent adhesion, and be chemically compatible to glass, metal, or wood.

2.3.2 Sealant

Sealant shall be elastomeric conforming to ASTM C 920, Type S or M, Grade NS, Class 12.5, Use G, of type chemically compatible with setting blocks, preformed sealing tape and sealants used in manufacturing insulating glass. Color of sealant shall be as selected.

2.3.3 Glazing Gaskets

Glazing gaskets shall be extruded with continuous integral locking projection designed to engage into metal glass holding members to provide a watertight seal during dynamic loading, building movements and thermal movements. Glazing gaskets for a single glazed opening shall be continuous one-piece units with factory-fabricated injection-molded corners free of flashing and burrs. Glazing gaskets shall be in lengths or units recommended by manufacturer to ensure against pull-back at corners. Glazing gasket profiles shall be as indicated on drawings.

2.3.3.1 Fixed Glazing Gaskets

Fixed glazing gaskets shall be closed-cell (sponge) smooth extruded compression gaskets of cured elastomeric virgin neoprene compounds conforming to ASTM C 509, Type 2, Option 1.

2.3.3.2 Wedge Glazing Gaskets

Wedge glazing gaskets shall be high-quality extrusions of cured elastomeric virgin neoprene compounds, ozone resistant, conforming to ASTM C 864, Option 1, Shore A durometer between 65 and 75.

2.3.3.3 Aluminum Framing Glazing Gaskets

Glazing gaskets for aluminum framing shall be permanent, elastic, non-shrinking, non-migrating, watertight and weathertight.

2.3.4 Putty and Glazing Compound

Glazing compound shall conform to ASTM C 669 for face-glazing metal sash. Putty shall be linseed oil type conforming to CID A-A-378for face-glazing primed wood sash. Putty and glazing compounds shall not be used with insulating glass or laminated glass.

2.3.5 Setting and Edge Blocking

Neoprene setting blocks shall be dense extruded type conforming to ASTM D 395, Method B, Shore A durometer between 70 and 90. Edge blocking shall be Shore A durometer of 50 (+ or - 5). Silicone setting blocks shall be required when blocks are in contact with silicone sealant. Profiles, lengths and locations shall be as required and recommended in writing by glass manufacturer.

PART 3 EXECUTION

3.1 PREPARATION

Openings and framing systems scheduled to receive glass shall be examined for compliance with approved shop drawings, GANA-01 and glass manufacturer's recommendations including size, squareness, offsets at corners, presence and function of weep system, face and edge clearance requirements and effective sealing between joints of glass-framing members. Detrimental materials shall be removed from glazing rabbet and glass surfaces and wiped dry with solvent. Glazing surfaces shall be dry and free of frost.

3.2 INSTALLATION

Glass and glazing work shall be performed in accordance with approved shop drawings, GANA-01, glass manufacturer's instructions and warranty requirements. Glass shall be installed with factory labels intact and removed only when instructed. Wired glass and fire/safety rated glass shall be installed in accordance with NFPA 80. Edges and corners shall not be ground, nipped or cut after leaving factory. Springing, forcing or twisting of units during installation will not be permitted.

3.3 CLEANING

Upon completion of project, outside surfaces of glass shall be washed clean and the inside surfaces of glass shall be washed and polished in accordance with glass manufacturer's recommendations.

3.4 PROTECTION

Glass work shall be protected immediately after installation. Glazed openings shall be identified with suitable warning tapes, cloth or paper flags, attached with non-staining adhesives. Reflective glass shall be protected with a protective material to eliminate any contamination of the reflective coating. Protective material shall be placed far enough away from the coated glass to allow air to circulate to reduce heat buildup and moisture accumulation on the glass. Glass units which are broken, chipped, cracked, abraded, or otherwise damaged during construction activities shall be removed and replaced with new units.

-- End of Section --

SECTION TABLE OF CONTENTS

DIVISION 09 - FINISHES

SECTION 09250

GYPSUM WALLBOARD

PART 1 GENERAL

1.1 REFERENCES
1.2 SUBMITTALS
1.3 QUALIFICATIONS
1.4 DELIVERY, STORAGE AND HANDLING
1.5 ENVIRONMENTAL CONDITIONS

PART 2 MATERIALS

2.1 NON-LOADBEARING STUD WALLS
2.1.1 Studs
2.1.2 Runner Tracks
2.2 GYPSUM BOARD
2.2.1 Standard Gypsum Board
2.3 TRIM, MOLDINGS, AND ACCESSORIES
2.3.1 Taping and Embedding Compound
2.3.2 Finishing or Topping Compound
2.3.3 All-Purpose Compound
2.3.4 Joint Tape
2.3.5 Trim, Control Joints, Beads, Stops and Nosings
2.4 FASTENINGS AND ADHESIVES
2.4.2 Screws
2.4.3 Adhesives
2.4.4 Hangers
2.4.5 Wire and Clip Type Fastenings
2.4.5.1 Tie Wire
2.4.5.2 Clips

PART 3 EXECUTION

3.1 INTERIOR WALL FRAMING
3.1.1 Wall Openings
3.1.2 Wall Control Joints
3.2 SUSPENDED CEILING FRAMING
3.2.1 Hangers
3.2.2 Main Runners
3.2.3 Furring Channels
3.2.4 Ceiling Openings
3.2.5 Light Fixtures
3.2.6 Control Joints
3.2.6.1 Interior Ceilings With Perimeter Relief
3.2.6.2 Interior Ceilings Without Perimeter Relief
3.3 APPLICATION OF GYPSUM BOARD
3.3.1 Backing Board
3.4 TRIM, MOLDINGS, AND ACCESSORIES INSTALLATION
3.5 TAPING AND FINISHING
3.6 PATCHING

-- End of Section Table of Contents --

SECTION 09250

GYPSUM WALLBOARD

PART 1 GENERAL

1.1 REFERENCES

The publications listed below form a part of this specification to the extent referenced. The publications are referred to in the text by basic designation only.

AMERICAN SOCIETY FOR TESTING AND MATERIALS (ASTM)

ASTM A 580	(1995a) Stainless and Heat Resisting Steel Wire
ASTM A 853	(1993) Steel Wire, Carbon, for General Use
ASTM B 164	(1993) Nickel-Copper Alloy Rod, Bar, and Wire
ASTM C 36	(1995) Gypsum Wallboard
ASTM C 475	(1994) Joint Compound and Joint Tape for Finishing Gypsum Board
ASTM C 645	(1995) Non-Load (Axial) Bearing Steel Studs, Runners (Track), and Rigid Furring Channels for Screw Application of Gypsum Board
ASTM C 754	(1996) Installation of Steel Framing Members to Receive Screw-Attached Gypsum Board
ASTM C 840	(1996) Application and Finishing of Gypsum Board
ASTM C 1002	(1996a) Steel Drill Screws for the Application of Gypsum Board or Metal Plaster Bases
ASTM C 1047	(1994) Accessories for Gypsum Wallboard and Gypsum Veneer Base

GYPSUM ASSOCIATION (GA)

GA 216	(1996) Application and Finishing of Gypsum Board

1.2 SUBMITTALS

Government approval is required for submittals with a "GA" designation; submittals having an "FIO" designation are for information only. The following shall be submitted in accordance with Section 01330 SUBMITTAL

PROCEDURES:

SD-04 Drawings

Steel Framing; FIO. Control Joints; FIO.

Drawings and installation details for ceiling framing, furring, special wall framing, and framed openings in walls and ceilings.

SD-13 Certificates

Gypsum Wallboard; FIO. Steel Framing; FIO.

Certificates stating that the steel framing and gypsum wallboard meet the specified requirements.

1.3 QUALIFICATIONS

Manufacturer shall specialize in manufacturing the types of material specified and shall have a minimum of 5 years of documented successful experience. Installer shall specialize in the type of gypsum board work required and shall have a minimum of 3 years of documented successful experience.

1.4 DELIVERY, STORAGE AND HANDLING

Materials shall be delivered in original containers bearing the name of manufacturer, contents, and brand name. Materials shall be stored off the ground in a weathertight structure for protection. Gypsum boards shall be stacked flat, off floor and supported to prevent sagging and warpage. Adhesives and joint materials shall be stored in accordance with manufacturer's printed instructions. Damaged or deteriorated materials shall be removed from jobsite.

1.5 ENVIRONMENTAL CONDITIONS

Environmental conditions for application and finishing of gypsum board shall be in accordance with ASTM C 840. During the application of gypsum board without adhesive, a room temperature of not less than 4 degrees C shall be maintained. During the application of gypsum board with adhesive, a room temperature of not less than 10 degrees C shall be maintained for 48 hours prior to application and continuously afterwards until completely dry. Building spaces shall be ventilated to remove water not required for drying joint treatment materials. Drafts shall be avoided during dry hot weather to prevent materials from drying too rapidly.

PART 2 MATERIALS

2.1 NON-LOADBEARING STUD WALLS

2.1.1 Studs

Studs for non-loadbearing walls shall conform to ASTM C 645. Studs shall be C-shaped, roll formed steel with minimum uncoated design thickness of 0.72 mm (0.0284 in) made from G40 hot-dip galvanized coated sheet.

2.1.2 Runner Tracks

Floor and ceiling runner tracks shall conform to ASTM C 645. Tracks shall be prefabricated, U-shaped with minimum 25 mm flanges, unpunched web, thickness to match studs, made from G40 hot-dip galvanized coated sheet.

2.2 GYPSUM BOARD

Gypsum board shall have square-cut ends, tapered or beveled edges and shall be maximum possible length. Gypsum board thickness shall be as shown.

2.2.1 Standard Gypsum Board

Regular gypsum board shall conform to ASTM C 36, and shall be 1200 mm wide.

2.3 TRIM, MOLDINGS, AND ACCESSORIES

2.3.1 Taping and Embedding Compound

Taping and embedding compound shall conform to ASTM C 475. Compound shall be specifically formulated and manufactured for use in embedding tape at gypsum wallboard joints and fastener heads, and shall be compatible with tape and substrate.

2.3.2 Finishing or Topping Compound

Finishing or topping compound shall conform to ASTM C 475. Compound shall be specifically formulated and manufactured for use as a finishing compound for gypsum board.

2.3.3 All-Purpose Compound

All-purpose compound shall be specifically formulated and manufactured to use as a taping and finishing compound, and shall be compatible with tape and substrate.

2.3.4 Joint Tape

Joint tape shall conform to ASTM C 475 and shall be as recommended by gypsum board manufacturer.

2.3.5 Trim, Control Joints, Beads, Stops and Nosings

Items used to protect edges, corners, and to provide architectural features shall be in accordance with ASTM C 1047.

2.4 FASTENINGS AND ADHESIVES

2.4.2 Screws

Screws shall conform to ASTM C 1002. Screws shall be self-drilling and self-tapping steel, Type S for wood or light-gauge steel framing.

2.4.3 Adhesives

Adhesives shall conform to ASTM C 557. For securing gypsum board to metal framing, adhesive shall be as recommended by gypsum board manufacturer.

2.4.4 Hangers

Suspended ceiling runner channel hangers shall be soft, annealed steel wire

not less than No. 8 SWG, conforming to ASTM A 853 or flat iron or steel straps, at least 2 x 22 mm size, coated with zinc, cadmium, or rust-inhibiting paint.

2.4.5 Wire and Clip Type Fastenings

Tie wire, clips, rings, and other fastenings shall be corrosion-resisting steel conforming to ASTM A 580, composition 302, 304, or 316, Condition A, or nickel-copper alloy conforming to ASTM B 164, annealed condition except that walls, partitions, and other vertical surfaces not incorporated in ceiling construction may be erected with soft, annealed steel conforming to ASTM A 853.

2.4.5.1 Tie Wire

Tie wire for constructing partitions and vertical furring, for securing metal lath to supports, and for lacing shall be not less than No. 18 SWG. Tie wire for other applications shall be not less than No. 16 SWG.

2.4.5.2 Clips

Clips used in lieu of tie wire for securing the furring channels to the runner channels in ceiling construction shall be made from strip not less than 3 mm thick or shall be hairpin clip, formed of wire not less than 0.4 mm nominal diameter. Other clips and rings or fastenings of similar materials shall be equivalent in holding power to that provided by tie wire for the specific application.

PART 3 EXECUTION

3.1 INTERIOR WALL FRAMING

Steel framing and furring members shall be installed in accordance with ASTM C 754. Members shall be in alignment with spacings not to exceed the maximum spacings indicated on drawings. Runners shall be aligned accurately at the floor and ceiling and securely anchored.

3.1.1 Wall Openings

The framing system shall provide for the installation and anchorage of the required subframes or finish frames for wall openings at doors. Partitions abutting continuous suspended ceilings shall be strengthened for rigidity at rough openings of more than 750 mm wide. Studs at openings shall be 0.84 mm (0.0329 in) minimum bare metal thickness and fully grouted at jamb anchor inserts. Double studs shall be fastened together with screws and secured to floor and overhead runners.

3.1.2 Wall Control Joints

Control joints for expansion and contraction in the walls shall be constructed with double studs installed 13 mm apart in interior walls or wall furringsas required. Control joint spacing shall not exceed 9 m. Ceiling-height door frames may be used as vertical control joints. Door frames of less than ceiling height may be used as control joints only if standard control joints extend to ceiling from both corners of top of door frame.

3.2 SUSPENDED CEILING FRAMING

Suspended ceiling system framing shall be installed in accordance with ASTM C 754.

3.2.1 Hangers

Hangers shall be spaced not more than 1200 mm along runner channels and 900 mm in the other direction or 1050 mm in both directions unless otherwise indicated. Locations of hanger wires shall be coordinated with other work. Hangers at ends of runner channels shall be located not more than 150 mm from wall. Hanger wire shall be looped around bottom chord of open-web steel joists, or secured to structural elements with suitable fasteners. Sags or twists which develop in the suspended system shall be adjusted. Damaged or faulty parts shall be replaced.

3.2.2 Main Runners

Main runner channels shall be installed in accordance with ASTM C 754. Hanger wires shall be double strand saddle-tied to runner channels and the ends of hanger wire shall be twisted three times around itself. Main runners shall be located to within 150 mm of the paralleling wall to support the ends of cross furring. Main runners shall not come in contact with abutting masonry or concrete walls. Where main runners are spliced, ends shall be overlapped 300 mm with flanges of channels interlocked, and shall be securely tied at each end of splice with wire looped twice around the channels.

3.2.3 Furring Channels

Furring channels shall be spaced in accordance with ASTM C 754. Furring channels shall be secured to the runner channels and to structural supports at each crossing with tie wire, hairpin clips, or equivalent fastenings. Furring channels shall be located within 50 mm of parallel walls and beams, and shall be cut 13 mm short of abutting walls.

3.2.4 Ceiling Openings

Support members shall be provided as required at ceiling openings for access panels, recessed light fixtures, and air supply or exhaust. Support members shall be not less than 38 mm main runner channels and vertically installed suspension wires or straps shall be located to provide at least the minimum support specified herein for furring and wallboard attachment. Intermediate structural members not a part of the structural system, shall be provided for attachment or suspension of support members.

3.2.5 Light Fixtures

Light fixtures shall not be supported directly from suspended ceiling runners. Hanger wires for recessed or surface mounted light fixtures shall be anchored to structure at four corners of light fixtures, and additional wires shall be provided at appropriate locations to carry the weight of light fixtures.

3.2.6 Control Joints

Ceiling control joints for expansion and contraction shall be located where indicated on drawings. A control joint or intermediate blocking shall be installed where ceiling framing members change direction.

3.2.6.1 Interior Ceilings With Perimeter Relief

Control joints shall be installed so that linear dimensions between control joints shall not exceed 15 m in either direction nor more than 230 square meters.

3.2.6.2 Interior Ceilings Without Perimeter Relief

Control joints shall be installed so that linear dimensions between control joints shall not exceed 9 m in either direction nor more than 84 square meters.

3.3 APPLICATION OF GYPSUM BOARD

Gypsum board shall be installed in accordance with ASTM C 840 and GA 216 and as specified. Edges and ends of gypsum boards shall be cut to obtain neat fitting joints. End joints of adjoining boards shall be staggered, and shall be staggered on opposite sides of wall. Boards shall be applied with moderate contact without forcing in place. Holes for pipes, fixtures or other small openings shall be cut with a tool which will provide a neat fit. Screws shall be driven so that the heads are slightly below the plane of paper face. Fracturing the paper face or damaging the core shall be avoided. Trim shall be installed at external and internal angles formed by the intersecting gypsum board surfaces with other surfaces. Corner beads shall be installed to vertical and horizontal corners in accordance with manufacturer's published instructions.

3.3.1 Backing Board

Gypsum board used as a substrate to receive ceramic tile shall be in accordance with ASTM C 840, System X.

3.4 TRIM, MOLDINGS, AND ACCESSORIES INSTALLATION

Trim, moldings and accessories shall be installed in accordance with GA 216.

3.5 TAPING AND FINISHING

Gypsum board taping and finishing shall be performed in accordance with ASTM C 840. Boards shall be kept free of dirt, oil and other foreign matter that could cause a lack of bond. Screw heads, dents, gouges, and cut-outs shall be filled with joint compound and sanded. Accessories at exposed joints, edges, corners, openings, and similar locations shall be taped, floated with joint compound, and sanded to produce surfaces ready for gypsum board finishes.

3.6 PATCHING

Surface defects and damage shall be corrected as required to leave gypsum board smooth, uniform in appearance, and ready to receive finish as specified.

-- End of Section --

SECTION TABLE OF CONTENTS

DIVISION 09 - FINISHES

SECTION 09310

CERAMIC TILE

PART 1 GENERAL

1.1 REFERENCES
1.2 SUBMITTALS
1.3 DELIVERY AND STORAGE
1.4 ENVIRONMENTAL REQUIREMENTS
1.5 WARRANTY

PART 2 PRODUCTS

2.1 TILE
2.1.1 Mosaic Tile
2.2 SETTING-BED
2.2.1 Aggregate for Concrete Fill
2.2.2 Portland Cement
2.2.3 Sand
2.2.4 Hydrated Lime
2.2.5 Metal Lath
2.2.6 Reinforcing Wire Fabric
2.3 WATER
2.4 MORTAR, GROUT, AND ADHESIVE
2.4.1 Latex-Portland Cement Mortar
2.4.2 Ceramic Tile Grout
2.4.3 Organic Adhesive

PART 3 EXECUTION

3.1 PREPARATORY WORK AND WORKMANSHIP
3.2 GENERAL INSTALLATION REQUIREMENTS
3.3 INSTALLATION OF FLOOR TILE
3.3.1 Latex-Portland Cement
3.3.2 Ceramic Tile Grout
3.4 CONTROL JOINTS
3.4.1.1 Floors
3.4.2 CLEANING AND PROTECTING

-- End of Section Table of Contents --

SECTION 09310

CERAMIC TILE

PART 1 GENERAL

1.1 REFERENCES

The publications listed below form a part of this specification to the extent referenced. The publications are referred to in the text by basic designation only.

AMERICAN NATIONAL STANDARDS INSTITUTE (ANSI)

ANSI A108.1A	(1992) Installation of Ceramic Tile in the Wet-Set Method, with Portland Cement Mortar
ANSI A108.1B	(1992) Installation of Ceramic Tile on a Cured Portland Cement Mortar Setting Bed with Dry-Set or Latex Portland Cement Mortar
ANSI A108.5	(1992) Installation of Ceramic Tile with Dry-Set Portland Cement Mortar or Latex-Portland Cement Mortar
ANSI A108.10	(1992) Installation of Grout in Tilework
ANSI A118.4	(1992) Latex-Portland Cement Mortar
ANSI A118.6	(1992) Ceramic Tile Grouts
ANSI A136.1	(1992) Organic Adhesives for Installation of Ceramic Tile
ANSI A137.1	(1988) Ceramic Tile

AMERICAN SOCIETY FOR TESTING AND MATERIALS (ASTM)

ASTM A 185	(1994) Steel Welded Wire Fabric, Plain, for Concrete Reinforcement
ASTM C 33	(1993) Concrete Aggregates
ASTM C 144	(1993) Aggregate for Masonry Mortar
ASTM C 150	(1995) Portland Cement
ASTM C 206	(1984; R 1992) Finishing Hydrated Lime
ASTM C 207	(1991; R 1992) Hydrated Lime for Masonry Purposes
ASTM C 373	(1988) Water Absorption, Bulk Density, Apparent Porosity, and Apparent Specific

	Gravity of Fired Whiteware Products
ASTM C 648	(1984; R 1994) Breaking Strength of Ceramic Tile
ASTM C 847	(1993) Metal Lath
ASTM C 1027	(1984; R 1990) Determining Visible Abrasion Resistance of Glazed Ceramic Tile
ASTM C 1028	(1989) Determining the Static Coefficient of Friction of Ceramic Tile and Other Like Surfaces by the Horizontal Dynamometer Pull-Meter Method

TILE COUNCIL OF AMERICA (TCA)

TCA-01	(1994) Handbook for Ceramic Tile Installation

1.2 SUBMITTALS

Government approval is required for submittals with a "GA" designation; submittals having an "FIO" designation are for information only. The following shall be submitted in accordance with Section 01330 SUBMITTAL PROCEDURES:

SD-01 Data

Tile; FIO. Setting-Bed; FIO. Mortar, Grout, and Adhesive; FIO.

Manufacturer's catalog data.

SD-06 Instructions

Tile; FIO. Mortar and Grout; FIO.

Manufacturers preprinted installation and cleaning instructions.

SD-09 Reports

Tile; FIO. Mortar, Grout, and Adhesive; FIO.
Certificates indicating conformance with specified requirements. A master grade certificate shall be furnished for tile.

SD-14 Samples

Tile; GA.

Samples of sufficient size to show color range, pattern, type and joints.

1.3 DELIVERY AND STORAGE

Materials shall be delivered to the project site in manufacturer's original unopened containers with seals unbroken and labels and hallmarks intact. Materials shall be kept dry, protected from weather, and stored under cover.

1.4 ENVIRONMENTAL REQUIREMENTS

Ceramic tile work shall not be performed unless the substrate and ambient temperature is at least 10 degrees C and rising. Temperature shall be maintained above 10 degrees C while the work is being performed and for at least 7 days after completion of the work. When temporary heaters are used they shall be vented to the outside to avoid carbon dioxide damage to new tilework.

1.5 WARRANTY

Manufacturer's standard performance guarantees or warranties that extend beyond a 1-year period shall be provided.

PART 2 PRODUCTS

2.1 TILE

Tile shall be standard grade conforming to ANSI A137.1. Containers shall be grade sealed. Seals shall be marked to correspond with the marks on the signed master grade certificate. Tile shall be impact resistant with a minimum breaking strength for wall tile of 41 kg and 113 kg for floor tile in accordance with ASTM C 648. Water absorption shall be 0.5 maximum percent in accordance with ASTM C 373. Floor tile shall have a minimum static coefficient of friction of 0.5 in accordance with ASTM C 1028. Tile shall be Class III as rated by the manufacturer when tested in accordance with ASTM C 1027for abrasion resistance as related to foot traffic.

2.1.1 Mosaic Tile

Ceramic mosaic tile and trim shall be unglazed porcelain unpolished with sharply formed face. Tile size shall be 50 by 50 mm . Color shall be as shown on the drawings.

2.2 SETTING-BED

The setting-bed shall be composed of the following:

2.2.1 Aggregate for Concrete Fill

Aggregate shall conform to ASTM C 33. Maximum size of coarse aggregate shall not be greater than one-half the thickness of concrete fill.

2.2.2 Portland Cement

Cement shall conform to ASTM C 150, Type I, white for wall mortar and gray for other uses.

2.2.3 Sand

Sand shall conform to ASTM C 144.

2.2.4 Hydrated Lime

Hydrated lime shall conform to ASTM C 206, Type S or ASTM C 207, Type S.

2.2.5 Metal Lath

Metal lath shall be flat expanded type conforming to ASTM C 847, and weighing not less than 1.4 kg/square meter.

2.2.6 Reinforcing Wire Fabric

Wire fabric shall conform to ASTM A 185. Wire shall be either 50 by 50 mm mesh, 16/16 wire or 38 by 50 mm mesh, 16/13 wire.

2.3 WATER

Water shall be potable.

2.4 MORTAR, GROUT, AND ADHESIVE

Mortar, grout, and adhesive shall conform to the following:

2.4.1 Latex-Portland Cement Mortar

ANSI A118.4.

2.4.2 Ceramic Tile Grout

ANSI A118.6; latex-portland cement grout.

2.4.3 Organic Adhesive

ANSI A136.1, Type I.

PART 3 EXECUTION

3.1 PREPARATORY WORK AND WORKMANSHIP

Surface to receive tile shall be inspected and shall conform to the requirements of ANSI A108.1A or ANSI A108.1B for surface conditions for the type setting bed specified and for workmanship. Variations of surface to be tiled shall fall within maximum values shown below:

TYPE	WALLS	FLOORS
Latex portland cement mortar	3 mm in 2.4 meters	3.0 mm in 3 meters

3.2 GENERAL INSTALLATION REQUIREMENTS

Tile work shall not be started until roughing in for mechanical and electrical work has been completed and tested, and built-in items requiring membrane waterproofing have been installed and tested. Floor tile installation shall not be started in spaces requiring wall tile until after wall tile has been installed. Tile in colors and patterns indicated shall be applied in the area shown on the drawings. Tile shall be installed with the respective surfaces in true even planes to the elevations and grades shown. Special shapes see drawings shall be provided as required for

sills, jambs, recesses, offsets, external corners, and other conditions to provide a complete and neatly finished installation. Tile bases and coves shall be solidly backed with mortar.

3.3 INSTALLATION OF FLOOR TILE

Floor tile shall be installed in accordance with TCA-01, method F112.

3.3.1 Latex-Portland Cement

Latex-portland cement mortar shall be used to install tile directly over properly cured, plane, clean concrete slabs in accordance with ANSI A108.5. Latex portland cement shall be used when installing porcelain ceramic tile.

3.3.2 Ceramic Tile Grout

Ceramic Tile grout shall be prepared and installed in accordance with ANSI A108.10.

3.4 CONTROL JOINTS

Joints shall be formed as indicated and sealed as specified in Section 07920 JOINT SEALING.

3.4.1.1 Floors

Control joints shall be provided over construction joints, control joints, and expansion joints in concrete slabs. Control joints shall also be provided where tile abuts restraining surfaces such as perimeter walls, curbs and columns and at intervals of 7.2 to 10.8 m each way in large interior floor areas and 3.6 to 4.8 m each way in large exterior areas or areas exposed to direct sunlight or moisture. Expansion joints shall extend through setting-beds and fill.

3.4.2 CLEANING AND PROTECTING

Upon completion, tile surfaces shall be thoroughly cleaned in accordance with manufacturer's approved cleaning instructions. Acid shall not be used for cleaning glazed tile. Floor tile with resinous grout or with factory mixed grout shall be cleaned in accordance with instructions of the grout manufacturer. After the grout has set, tile wall surfaces shall be given a protective coat of a noncorrosive soap or other approved method of protection. Tiled floor areas shall be covered with building paper before foot traffic is permitted over the finished tile floors. Board walkways shall be laid on tiled floors that are to be continuously used as passageways by workmen. Damaged or defective tiles shall be replaced.

-- End of Section --

SECTION TABLE OF CONTENTS

DIVISION 09 - FINISHES

SECTION 09510

ACOUSTICAL CEILINGS

PART 1 GENERAL

1.1 REFERENCES
1.2 GENERAL REQUIREMENTS
1.3 SUBMITTALS
1.4 DELIVERY AND STORAGE
1.5 ENVIRONMENTAL REQUIREMENTS
1.6 SCHEDULING
1.7 WARRANTY
1.8 EXTRA MATERIALS

PART 2 PRODUCTS

2.1 ACOUSTICAL UNITS
2.1.1 Units for Exposed-Grid System A
2.2 SUSPENSION SYSTEM
2.3 HANGERS
2.4 ACCESS PANELS
2.5 FINISHES
2.6 COLORS AND PATTERNS
2.7 CEILING ATTENUATION CLASS AND TEST

PART 3 EXECUTION

3.1 INSTALLATION
3.1.1 Suspension System
3.1.1.1 Plumb Hangers
3.1.1.2 Splayed Hangers
3.1.2 Wall Molding
3.1.3 Acoustical Units
3.2 CEILING ACCESS PANELS
3.3 CLEANING

-- End of Section Table of Contents --

SECTION 09510

ACOUSTICAL CEILINGS

PART 1 GENERAL

1.1 REFERENCES

The publications listed below form a part of this specification to the extent referenced. The publications are referred to in the text by basic designation only.

AMERICAN SOCIETY FOR TESTING AND MATERIALS (ASTM)

ASTM C 635	(1995) Manufacture, Performance, and Testing of Metal Suspension Systems for Acoustical Tile and Lay-In Panel Ceilings
ASTM C 636	(1992) Installation of Metal Ceiling Suspension Systems for Acoustical Tile and Lay-In Panel Ceilings
ASTM E 1264	(1990) Standard Classification for Acoustical Ceiling Products
ASTM E 1414	(1991a) Standard Test for Airborne Sound Attenuation Between Rooms Sharing a Common Ceiling Plenum.

UNDERWRITERS LABORATORIES (UL)

UL-05	(1996) Fire Resistance Directory

1.2 GENERAL REQUIREMENTS

Acoustical treatment shall consist of sound controlling units mechanically mounted on a ceiling suspension system. The unit size, texture, finish, and color shall be as specified. The location and extent of acoustical treatment shall be as shown on the drawings.

1.3 SUBMITTALS

Government approval is required for submittals with a "GA" designation; submittals having an "FIO" designation are for information only. The following shall be submitted in accordance with Section 01330 SUBMITTAL PROCEDURES:

SD-01 Data

Acoustical Ceiling System; FIO.

Manufacturer's descriptive data, catalog cuts, and installation instructions.

SD-04 Drawings

Acoustical Ceiling System; FIO.

Drawings showing suspension system, method of anchoring and fastening, details, and reflected ceiling plan.

SD-09 Reports

Ceiling Attenuation Class and Test; FIO.

Reports by an independent testing laboratory attesting that acoustical ceiling systems meet specified sound transmission requirements. Data attesting to conformance of the proposed system to Underwriters Laboratories requirements for the fire endurance rating listed in UL-05 may be submitted in lieu of test reports.

SD-13 Certificates

Acoustical Units; FIO.

Certificate attesting that the mineral based acoustical units furnished for the project contains recycled material and showing an estimated percent of such material.

SD-14 Samples

Acoustical Units; GA.

Two samples of each type of acoustical unit and each type of suspension grid tee section showing texture, finish, and color.

1.4 DELIVERY AND STORAGE

Materials shall be delivered to the site in the manufacturer's original unopened containers with brand name and type clearly marked. Materials shall be carefully handled and stored in dry, watertight enclosures. Immediately before installation, acoustical units shall be stored for not less than 24 hours at the same temperature and relative humidity as the space where they will be installed in order to assure proper temperature and moisture acclimation.

1.5 ENVIRONMENTAL REQUIREMENTS

A uniform temperature of not less than 16 degrees C nor more than 29 degrees C and a relative humidity of not more than 70 percent shall be maintained before, during, and after installation of acoustical units.

1.6 SCHEDULING

Interior finish work such as plastering, concrete and terrazzo work shall be complete and dry before installation. Mechanical, electrical, and other work above the ceiling line shall be completed and heating, ventilating, and air conditioning systems shall be installed and operating in order to maintain temperature and humidity requirements.

1.7 WARRANTY

Manufacturer's standard performance guarantees or warranties that extend beyond a one year period shall be provided.

1.8 EXTRA MATERIALS

Spare tiles of each color shall be furnished at the rate of 5 tiles for each 1000 tiles installed. Tiles shall be from the same lot as those installed.

PART 2 PRODUCTS

2.1 ACOUSTICAL UNITS

Acoustical units shall conform to ASTM E 1264, Class A, and the following requirements:

2.1.1 Units for Exposed-Grid System A

Type: III (mineral fiber with painted finish) or IV (mineral fiber with membrane-faced overlay). Type III or IV acoustical units shall have a minimum recycled material content of 18 percent.
Minimum NRC: 0.55 when tested on mounting No. E-400
Pattern: A, B, C, D,
Nominal size: 600 by 1200 mm.
Edge detail: Trimmed and butt.
Finish: Factory-applied color finish.
Minimum LR coefficient: 0.70.
Minimum CAC: 40.

2.2 SUSPENSION SYSTEM

Suspension system shall be standard exposed-grid , and shall conform to ASTM C 635 for intermediate-duty systems. Surfaces exposed to view shall be aluminum or steel with a factory-applied white baked-enamel finish Wall molding shall have a flange of not less than 23 mm. Standard corners shall be provided.

2.3 HANGERS

Hangers shall be galvanized steel wire. Hangers and attachment shall support a minimum 1330 N ultimate vertical load without failure of supporting material or attachment.

2.4 ACCESS PANELS

Access panels shall match adjacent acoustical units and shall be designed and equipped with suitable framing and fastenings for removal and replacement without damage. Panel shall be not less than 300 by 300 mm or more than 300 by 600 mm. An identification plate of 0.8 mm thick aluminum, 19 mm in diameter, stamped with the letters "AP" and finished the same as the unit, shall be attached near one corner on the face of each access panel.

2.5 FINISHES

Acoustical units and suspension system members shall have manufacturer's standard textures, patterns and finishes as specified. Ceiling suspension system components shall be treated to inhibit corrosion.

2.6 COLORS AND PATTERNS

Colors and patterns for acoustical units and suspension system components

shall be as shown on the drawings.

2.7 CEILING ATTENUATION CLASS AND TEST

Ceiling attenuation class (CAC) range of acoustical units, when required, shall be determined in accordance with ASTM E 1414. Test ceiling shall be continuous at the partition and shall be assembled in the suspension system in the same manner that the ceiling will be installed on the project. System shall be tested with all acoustical units installed.

PART 3 EXECUTION

3.1 INSTALLATION

Acoustical work shall be provided complete with necessary fastenings, clips, and other accessories required for a complete installation. Mechanical fastenings shall not be exposed in the finished work. Hangers shall be laid out for each individual room or space. Hangers shall be placed to support framing around beams, ducts, columns, grilles, and other penetrations through ceilings. Main runners and carrying channels shall be kept clear of abutting walls and partitions. At least two main runners shall be provided for each ceiling span. Wherever required to bypass an object with the hanger wires, a subsuspension system shall be installed, so that all hanger wires will be plumb execpt around obstruction where splayed wires can be used..

3.1.1 Suspension System

Suspension system shall be installed in accordance with ASTM C 636 and as specified herein. There shall be no hanger wires or other loads suspended from underside of steel decking.

3.1.1.1 Plumb Hangers

Hangers shall be plumb and shall not press against insulation covering ducts and pipes.

3.1.1.2 Splayed Hangers

Where hangers must be splayed (sloped or slanted) around obstructions, the resulting horizontal force shall be offset by bracing, countersplaying, or other acceptable means.

3.1.2 Wall Molding

Wall molding shall be provided where ceilings abut vertical surfaces. Wall molding shall be secured not more than 75 mm from ends of each length and not more than 400 mm on centers between end fastenings. Wall molding springs shall be provided at each acoustical unit in semi-exposed or concealed systems.

3.1.3 Acoustical Units

Acoustical units shall be installed in accordance with the approved installation instructions of the manufacturer. Edges of acoustical units shall be in close contact with metal supports, with each other, and in true alignment. Acoustical units shall be arranged so that units less than one-half width are minimized. Units in exposed-grid system shall be held in place with manufacturer's standard hold-down clips, if units weigh less

than 5 kg per square m or if required for fire resistance rating.

3.2 CEILING ACCESS PANELS

Ceiling access panels shall be located directly under the items which require access.

3.3 CLEANING

Following installation, dirty or discolored surfaces of acoustical units shall be cleaned and left free from defects. Units that are damaged or improperly installed shall be removed and new units provided as directed.

-- End of Section --

SECTION TABLE OF CONTENTS

DIVISION 09 - FINISHES

SECTION 09650

RESILIENT FLOORING

PART 1 GENERAL

1.1 REFERENCES
1.2 SUBMITTALS
1.3 DELIVERY AND STORAGE
1.4 ENVIRONMENTAL REQUIREMENTS
1.5 SCHEDULING
1.6 WARRANTY
1.7 EXTRA MATERIALS

PART 2 PRODUCTS

2.1 SHEET VINYL FLOORING TYPE A
2.2 RESILIENT BASE
2.3 TRANSITION STRIP
2.4 ADHESIVE
2.5 POLISH
2.6 CAULKING AND SEALANTS
2.7 MANUFACTURER'S COLOR AND TEXTURE

PART 3 EXECUTION

3.1 EXAMINATION/VERIFICATION OF CONDITIONS
3.2 SURFACE PREPARATION
3.3 MOISTURE TEST
3.4 INSTALLATION OF SHEET VINYL FLOORING
3.5 INSTALLATION OF RESILIENT BASE
3.6 CLEANING
3.7 PROTECTION

-- End of Section Table of Contents --

SECTION 09650

RESILIENT FLOORING

PART 1 GENERAL

1.1 REFERENCES

The publications listed below form a part of this specification to the extent referenced. The publications are referred to in the text by basic designation only.

AMERICAN SOCIETY FOR TESTING AND MATERIALS (ASTM)

ASTM D 4078	(1992) Water Emulsion Floor Polish
ASTM F 1303	(1995) Sheet Vinyl Floor Covering with Backing

1.2 SUBMITTALS

Government approval is required for submittals with a "GA" designation; submittals having an "FIO" designation are for information only. The following shall be submitted in accordance with Section 01330 SUBMITTAL PROCEDURES:

SD-01 Data

Resilient Flooring and Accessories; FIO.

Manufacturer's descriptive data and installation instructions including cleaning and maintenance instructions.

SD-09 Reports

Resilient Flooring and Accessories; FIO.

Copies of test reports showing that representative product samples of the flooring proposed for use have been tested by an independent testing laboratory within the past three years or when formulation change occurred and conforms to the requirements specified.

SD-14 Samples

Resilient Flooring and Accessories; GA.

Three samples of each indicated color and type of flooring and base. Sample size shall be minimum 60 by 100 mm.

1.3 DELIVERY AND STORAGE

Materials shall be delivered to the building site in original unopened containers bearing the manufacturer's name, project identification, and handling instructions. Materials shall be stored in a clean dry area with temperature maintained above 21 degrees C for 2 days prior to

installation, and shall be stacked according to manufacturer's recommendations. Materials shall be protected from the direct flow of heat from hot-air registers, radiators and other heating fixtures and appliances.

1.4 ENVIRONMENTAL REQUIREMENTS

Areas to receive resilient flooring shall be maintained at a temperature above 21 degrees C and below 38 degrees C for 2 days before application, during application and 2 days after application. A minimum temperature of 13 degrees C shall be maintained thereafter.

1.5 SCHEDULING

Resilient flooring application shall be scheduled after the completion of other work which would damage the finished surface of the flooring.

1.6 WARRANTY

Manufacturer's standard performance guarantees or warranties that extend beyond a one year period shall be provided.

1.7 EXTRA MATERIALS

Extra flooring material of each color and pattern shall be furnished at the rate of 0.5 m square meters for each 92 square meters of sheet flooring installed. Extra materials shall be from the same lot as those installed. Extra base material composed of 6 m of each color shall be furnished.

PART 2 PRODUCTS

2.1 SHEET VINYL FLOORING TYPE A

Sheet vinyl flooring shall be composed of a homogeneous, vinyl composition. Flooring shall be not less than 18OO mm wide. Sheet vinyl flooring with backing shall conform to ASTM F 1303, Type II, Grade 1 (minimum wear layer thickness 1.27 mm) and minimum overall thickness 2.03 mm. Sheet vinyl flooring without backing shall meet the overall thickness 2.03 mm, composition, flexibility, indentation, and the solvent resistance requirements of ASTM F 1303, Type II. The solid vinyl color and pattern shall extend through the total thickness of the material.

2.2 RESILIENT BASE

Base shall be manufacturers standard vinyl, coved style (installed with resilient flooring). Base shall be 100 mm high and a minimum 3 mm thick. Preformed outside corners shall be furnished.

2.3 TRANSITION STRIP

A vinyl transition strip tapered to meet abutting material shall be provided.

2.4 ADHESIVE

Adhesive for flooring and wall base shall be as recommended by the flooring manufacturer.

2.5 POLISH

Polish shall conform to ASTM D 4078.

2.6 CAULKING AND SEALANTS

Caulking and sealants shall be in accordance with Section 07920 JOINT SEALING.

2.7 MANUFACTURER'S COLOR AND TEXTURE

Color and texture shall be as shown on the drawings.

PART 3 EXECUTION

3.1 EXAMINATION/VERIFICATION OF CONDITIONS

The Contractor shall examine and verify that site conditions are in agreement with the design package and shall report all conditions that will prevent a proper installation. The Contractor shall not take any corrective action without written permission from the Government.

3.2 SURFACE PREPARATION

Flooring shall be in a smooth, true, level plane, except where indicated as sloped. Before any work under this section is begun, all defects such as rough or scaling concrete, low spots, high spots, and uneven surfaces shall have been corrected, and all damaged portions of concrete slabs shall have been repaired as recommended by the flooring manufacturer. Concrete curing compounds, other than the type that does not adversely affect adhesion, shall be entirely removed from the slabs. Paint, varnish, oils, release agents, sealers, waxers, and adhesives shall be removed, as recommended by the flooring manufacturer.

3.3 MOISTURE TEST

The suitability of the concrete subfloor for receiving the resilient flooring with regard to moisture content shall be determined by a moisture test as recommended by the flooring manufacturer.

3.4 INSTALLATION OF SHEET VINYL FLOORING

Sheet vinyl flooring shall be installed with adhesive in accordance with the manufacturer's written installation instructions. Flooring shall be fitted to the room by hand cutting, straight scribing, or pattern scribing as necessary to suit job conditions. Flooring shall be cut to, and fitted around, all permanent fixtures, built-in furniture and cabinets, pipes, and outlets. Seams shall be cut by overlapping or underscribing as recommended by the manufacturer.

3.5 INSTALLATION OF RESILIENT BASE

Wall base shall be installed with adhesive in accordance with the manufacturer's written instructions. Base joints shall be tight and base shall be even with adjacent resilient flooring. Voids along the top edge of base at masonry walls shall be filled with caulk.

3.6 CLEANING

Immediately upon completion of installation of tile in a room or an area, flooring and adjacent surfaces shall be cleaned to remove all surplus

adhesive. After installation, flooring shall be washed with a cleaning solution, rinsed thoroughly with clear cold water, and, given two coats of polish in accordance with manufacturers written instructions. After each polish coat, floors shall be buffed to an even luster with an electric polishing machine.

3.7 PROTECTION

From the time of laying until acceptance, flooring shall be protected from damage as recommended by the flooring manufacturer. Flooring which becomes damaged, loose, broken, or curled shall be removed and replaced.

-- End of Section --

SECTION TABLE OF CONTENTS

DIVISION 09 - FINISHES

SECTION 09900

PAINTING, GENERAL

PART 1 GENERAL

1.1 REFERENCES
1.2 SUBMITTALS
1.3 PACKAGING, LABELING, AND STORING
1.4 APPROVAL OF MATERIALS
1.5 ENVIRONMENTAL CONDITIONS
1.6 SAFETY AND HEALTH
1.6.1 Worker Exposures
1.6.2 Toxic Compounds
1.6.3 Training
1.6.4 Coordination

PART 2 PRODUCTS

2.1 PAINT
2.1.1 Colors and Tints
2.1.2 Mildewcide and Insecticide
2.1.3 Lead
2.1.4 Chromium
2.1.5 Volatile Organic Compound (VOC) Content

PART 3 EXECUTION

3.1 PROTECTION OF AREAS NOT TO BE PAINTED
3.2 SURFACE PREPARATION
3.2.1 Concrete Surfaces
3.2.2 Ferrous Surfaces
3.2.3 Nonferrous Metallic Surfaces
3.2.4 Gypsum Board Surfaces
3.2.5 Mastic-Type Surfaces
3.2.6 Previously Painted Surfaces
3.3 MIXING AND THINNING
3.3.2 APPLICATION
3.3.2.1 Ventilation
3.3.2.2 Respirators
3.3.2.3 First Coat
3.3.2.4 Timing
3.3.3 Ferrous-Metal Primer
3.4 PIPE COLOR CODE MARKING
3.5 MISCELLANEOUS PAINTING
3.5.1 Lettering
3.6 SURFACES TO BE PAINTED
3.7 SURFACES NOT TO BE PAINTED
3.8 CLEANING
3.9 PAINTING SCHEDULES

-- End of Section Table of Contents --

SECTION 09900

PAINTING, GENERAL

PART 1 GENERAL

1.1 REFERENCES

The publications listed below form a part of this specification to the extent referenced. The publications are referred to in the text by basic designation only.

AMERICAN SOCIETY FOR TESTING AND MATERIALS (ASTM)

ASTM D 4214	(1989) Evaluating the Degree of Chalking of Exterior Paint Films

COMMERCIAL ITEM DESCRIPTIONS (CID)

CID A-A-2247	(Basic) Paint, Latex (Semigloss, Interior)
CID A-A-2542	(Basic) Sealer, Terrazzo and Concrete Floors, Waterbased
CID A-A-2962	(Basic) Enamel, Alkyd

FEDERAL SPECIFICATIONS (FS)

FS TT-E-2784	(Rev A) Enamel (Acrylic-Emulsion, Exterior/Interior, Gloss, Semigloss, and Flat) (Metric)

STEEL STRUCTURES PAINTING COUNCIL (SSPC)

SSPC SP 1	(1982) Solvent Cleaning
SSPC SP 2	(1995) Hand Tool Cleaning
SSPC SP 3	(1995) Power Tool Cleaning
SSPC SP 7	(1994) Brush-Off Blast Cleaning

1.2 SUBMITTALS

Government approval is required for submittals with a "GA" designation; submittals having an "FIO" designation are for information only. The following shall be submitted in accordance with Section 01300 SUBMITTAL PROCEDURES:

SD-01 Data

Paint; GA.

The names, quantity represented, and intended use for the proprietary brands of materials proposed to be substituted for the specified materials when the required quantity of a particular batch is 200 L(50 gal>) or less.

SD-06 Instructions

Mixing and Thinning; FIO. Application; GA.

Manufacturer's current printed product description, material safety data sheets (MSDS) and technical data sheets for each coating system. Detailed mixing, thinning and application instructions, minimum and maximum application temperature, and curing and drying times between coats for epoxy, moisture-curing polyurethane, and liquid glaze coatings. Detailed application instructions for textured coatings shall be provided.

SD-09 ReportsSpecification Formulated

Paint; FIO.

A statement as to the quantity represented and the intended use, plus the following test report for batches in excess of 200 L:

a. A test report showing that the proposed batch to be used meets all specification requirements, or:

b. A test report showing that a previous batch of the same formulation as the batch to be used met all specification requirements, plus, on the proposed batch to be used, a report of test results for properties of weight per liter, viscosity, fineness of grind, drying time, color, and gloss.

SD-13 Certificates

Mildewcide and Insecticide; FIO. Volatile Organic Compound (VOC) Content; FIO.

Certificate stating that paints for interior use contain no mercurial mildewcide or insecticide. Certificate stating that paints proposed for use contain not more than 0.06 percent lead by weight of the total nonvolatile. Certificate stating that paints proposed for use meet Federal VOC regulations and those of the of the local Air Pollution Control Districts having jurisdiction over the geographical area in which the project is located.

SD-14 Samples

Paint; FIO.

While the material is at the site or source of supply, and at a time agreeable to the Contractor and the Contracting Officer, a 1 liter sample of each color and batch, except for quantities of 200 liters(50 gal.) or less, shall be taken by random selection from the sealed containers by the Contractor in the presence of a representative of the Contracting Officer. The contents of the containers to be sampled shall be thoroughly mixed to ensure that the sample is representative. Samples shall be identified by designated name, specification number, manufacturer name and address, batch number, project contract number, intended use, and quantity involved.

1.3 PACKAGING, LABELING, AND STORING

Paints shall be in sealed containers that legibly show the designated name, formula or specification number, batch number, color, quantity, date of manufacture, manufacturer's formulation number, manufacturer's directions including any warnings and special precautions, and name of manufacturer. Pigmented paints shall be furnished in containers not larger than 20 liters.

Paints and thinner shall be stored in accordance with the manufacturer's written directions and as a minimum stored off the ground, under cover, with sufficient ventilation to prevent the buildup of flammable vapors and at temperatures between 4 and 35 degrees C. Paints shall be stored on the project site or segregated at the source of supply sufficiently in advance of need to allow 30 days for testing.

1.4 APPROVAL OF MATERIALS

When specification formulatedsamples are tested, approval of materials will be based on tests of the samples; otherwise, materials will be approved based on test reports furnished with them. If materials are approved based on test reports furnished, samples will be retained by the Government for testing should the materials appear defective during or after application. In addition to any other remedies under the contract the cost of retesting defective materials will be at the Contractor's expense.

1.5 ENVIRONMENTAL CONDITIONS

Unless otherwise recommended by the paint manufacturer, the ambient temperature shall be between 7 and 35 degrees C when applying coatings other than water-thinned. Water-thinned coatings shall be applied only when ambient temperature is between 10 and 32 degrees C.

1.6 SAFETY AND HEALTH

Work shall comply with applicable Federal, State, and local laws and regulations, and with the ACCIDENT PREVENTION PLAN, including the Activity Hazard Analysis as specified in the CONTRACT CLAUSES. The Activity Hazard Analysis shall include analyses of the potential impact of painting operations on painting personnel and on others involved in and adjacent to the work zone.

1.6.1 Worker Exposures

Exposure of workers to hazardous chemical substances shall not exceed limits as established by ACGIH-02, or as required by a more stringent applicable regulation.

1.6.2 Toxic Compounds

Toxic products having ineffective physiological warning properties, such as no or low odor or irritation levels, shall not be used unless approved by the Contracting Officer.

1.6.3 Training

Workers having access to an affected work area shall be informed of the contents of the applicable material data safety sheets (MSDS) and shall be informed of potential health and safety hazard and protective controls associated with materials used on the project. An affected work area is one which may receive mists and odors from the painting operations. Workers involved in preparation, painting and clean-up shall be trained in the safe handling and application, and the exposure limit, for each material which the worker will use in the project. Personnel having a need to use respirators and masks shall be instructed in the use and maintenance of such equipment.

1.6.4 Coordination

Work shall be coordinated to minimize exposure of building occupants, other Contractor personnel, and visitors to mists and odors from preparation, painting and clean-up operations.

PART 2 PRODUCTS

2.1 PAINT

The term "paint" as used herein includes emulsions, enamels, paints, sealers, and other coatings, whether used as prime, intermediate, or finish coat. Paint shall conform to the respective specifications listed for use in the painting schedules at the end of this section, except when the required amount of a material of a particular batch is 200 liters or less, an approved first-line proprietary paint material with similar intended formulation, usage and color to that specified may be used. Additional requirements are as follows:

2.1.1 Colors and Tints

Colors shall be as selected from manufacturer's standard colors, as indicated. Manufacturer's standard color is for identification of color only. Stains shall conform in shade to manufacturer's standard color. The color of the undercoats shall vary slightly from the color of the next coat.

2.1.2 Mildewcide and Insecticide

Paint specified for all coats applied to fabrics and vapor barrier jackets over insulation shall contain a mildewcide that will not adversely affect the color, texture, or durability of the coating. The mildewcide shall be incorporated into the paint by the manufacturer and shall attain a surface disfigurement rating of 8 or greater when tested in accordance with ASTM D 3273 and evaluated in accordance with ASTM D 3274. Mercurial mildewcide shall not be used in interior paint. Insecticides shall not be used in paint.

2.1.3 Lead

Paints containing lead in excess of 0.06 percent by weight of the total nonvolatile content (calculated as lead metal) shall not be used.

2.1.4 Chromium

Paints containing zinc chromate or strontium chromate pigments shall not be used.

2.1.5 Volatile Organic Compound (VOC) Content

Paints shall comply with applicable federal, state and local laws enacted to insure compliance with Federal Clean Air Standards and shall conform to the restrictions of the local air pollution control authority.

PART 3 EXECUTION

3.1 PROTECTION OF AREAS NOT TO BE PAINTED

Items not to be painted which are in contact with or adjacent to painted surfaces shall be removed or protected prior to surface preparation and painting operations. Items removed prior to painting shall be replaced when painting is completed. Following completion of painting, workmen skilled in the trades involved shall reinstall removed items. Surfaces contaminated by coating materials shall be restored to original condition.

3.2 SURFACE PREPARATION

Surfaces to be painted shall be clean and free of foreign matter before application of paint or surface treatments. Oil and grease shall be removed prior to mechanical cleaning. Cleaning shall be programmed so that dust and other contaminants will not fall on wet, newly painted surfaces. Exposed ferrous metals such as nail heads on or in contact with surfaces to be painted with water-thinned paints, shall be spot-primmed with a suitable corrosion-inhibitive primer capable of preventing flash rusting and compatible with the coating specified for the adjacent areas.

3.2.1 Concrete Surfaces

Concrete surfaces shall be allowed to dry at least 30 days before painting, except concrete slab on grade which shall be allowed to cure 90 days before painting. Surfaces shall be cleaned in accordance with ASTM D 4258. Glaze, efflorescence, laitance, dirt, grease, oil, asphalt, surface deposits of free iron and other foreign matter shall be removed prior to painting. Surfaces to receive polyurethane or epoxy coatings shall be acid-etched or mechanically abraded as specified by the coating manufacturer, rinsed with water, allowed to dry, and treated with the manufacturer's recommended conditioner prior to application of the first coat.

3.2.2 Ferrous Surfaces

Ferrous surfaces including those that have been shop-coated, shall be solvent-cleaned or detergent-washed in accordance with SSPC SP 1. Surfaces that contain loose rust, loose mill scale, and other foreign substances shall be cleaned mechanically with hand tools according to SSPC SP 2, power tools according to SSPC SP 3 or by sandblasting according to SSPC SP 7. Shop-coated ferrous surfaces shall be protected from corrosion by treating and touching up corroded areas immediately upon detection.

3.2.3 Nonferrous Metallic Surfaces

Galvanized, aluminum and aluminum-alloy, lead, copper, and other nonferrous metal surfaces shall be solvent-cleaned or detergent-washed in accordance with SSPC SP 1.

3.2.4 Gypsum Board Surfaces

Gypsum board surfaces shall be dry and shall have all loose dirt and dust removed by brushing with a soft brush, rubbing with a cloth, or vacuum-cleaning prior to application of the first-coat material. A damp cloth or sponge may be used if paint will be water-based.

3.2.5 Mastic-Type Surfaces

Mastic-type surfaces shall be prepared by removing foreign material.

3.2.6 Previously Painted Surfaces

Previously painted surfaces damaged during construction shall be thoroughly cleaned of all grease, dirt, dust or other foreign matter. Blistering, cracking, flaking and peeling or other deteriorated coatings shall be removed. Slick surfaces shall be roughened. Damaged areas such as, but not limited to, nail holes, cracks, chips, and spalls shall be repaired with suitable material to match adjacent undamaged areas. Edges of chipped paint shall be feather edged and sanded smooth. Rusty metal surfaces shall be cleaned as per SSPC requirements. Solvent, mechanical, or chemical cleaning methods shall be used to provide surfaces suitable for painting. Chalk shall be removed so that when tested in accordance with ASTM D 4214, the chalk resistance rating is no less than 8. New, proposed coatings shall be compatible with existing coatings. If existing surfaces are glossy, the gloss shall be reduced.

3.3 MIXING AND THINNING

When thinning is approved as necessary to suit surface, temperature, weather conditions, or application methods, paints may be thinned in accordance with the manufacturer's directions. When thinning is allowed, paints shall be thinned immediately prior to application with not more than 0.125 L of suitable thinner per liter. The use of thinner shall not relieve the Contractor from obtaining complete hiding, full film thickness, or required gloss. Thinning shall not cause the paint to exceed limits on volatile organic compounds. Paints of different manufacturers shall not be mixed.

3.3.2 APPLICATION

Painting practices shall comply with applicable federal, state and local laws enacted to insure compliance with Federal Clean Air Standards. Unless otherwise specified or recommended by the paint manufacturer, paint may be applied by brush, roller, or spray. At the time of application, paint shall show no signs of deterioration. Uniform suspension of pigments shall be maintained during application. Each coat of paint shall be applied so dry film shall be of uniform thickness and free from runs, drops, ridges, waves, pinholes or other voids, laps, brush marks, and variations in color, texture, and finish. Hiding shall be complete. Rollers for applying paints and enamels shall be of a type designed for the coating to be applied and the surface to be coated. Special attention shall be given to insure that all edges, corners, crevices, welds, and rivets receive a film thickness equal to that of adjacent painted surfaces. Paints, except water-thinned types, shall be applied only to surfaces that are completely

free of moisture as determined by sight or touch.

3.3.2.1 Ventilation

Affected areas shall be ventilated during paint application so that workers exposure to chemical substances shall not exceed limits as established by ACGIH-02, or as required by a more stringent applicable regulation. Interior work zones having a volume of 280 cubic meters or less shall be ventilated at a minimum of 2 air exchanges per hour. Ventilation in larger work zones shall be maintained by means of mechanical exhaust. Solvent vapors shall be exhausted outdoors, away from air intakes and workers. Return air inlets in the work zone shall be temporarily sealed before start of work until the coatings have dried.

3.3.2.2 Respirators

Operators and personnel in the vicinity of operating paint sprayers shall wear respirators.

3.3.2.3 First Coat

The first coat on plaster, gypsum wallboard, and other surfaces shall include repeated touching up of suction spots or overall application of primer or sealer to produce uniform color and gloss. Excess sealer shall be wiped off after each application.

3.3.2.4 Timing

Surfaces that have been cleaned, pretreated, and otherwise prepared for painting shall be given a coat of the specified first coat as soon as practical after such pretreatment has been completed, but prior to any deterioration of the prepared surface. Sufficient time shall elapse between successive coats to permit proper drying. This period shall be modified as necessary to suit weather conditions. Oil-based or oleoresinous solvent-type paints shall be considered dry for recoating when the paint feels firm, does not deform or feel sticky under moderate pressure of the thumb, and the application of another coat of paint does not cause the undercoat to lift or lose adhesion. Manufacturer's instructions for application, curing and drying time between coats of two-component systems shall be followed.

.

3.3.3 Ferrous-Metal Primer

Primer for ferrous-metal shall be applied to ferrous surfaces to receive paint other than asphalt varnish prior to deterioration of the prepared surface. The semitransparent film applied to some pipes and tubing at the mill is not to be considered a shop coat, but shall be overcoated with the specified ferrous-metal primer prior to application of finish coats.

3.4 PIPE COLOR CODE MARKING

Pipes in exposed areas and in accessible pipe spaces shall be provided with color band and titles adjacent to all valves, except those provided at plumbing fixtures, at not more than 12 meter spacing on straight pipe runs, adjacent to change in direction, and on both sides where pipes pass through walls or floors. Color code marking shall be of the color listed in TABLE I and the size listed in TABLE II. The arrows shall be installed

adjacent to each band to indicate the direction of flow in the pipe. The legends shall be printed in upper-case black letters as listed in TABLE I. Letter sizes shall be as listed in TABLE II. Marking shall be painted or applied using colored, pressure-sensitive adhesive markers of standard manufacture. Paint shall be as specified for insulated and uninsulated piping.

TABLE I. COLOR CODES FOR MARKING PIPE

Material	Band	Letters and Arrow*	Legend
Cold water (potable) WATER	Green	White	POTABLE
Fire protection water WATER	Red	White	FIRE PR.
Hot water (domestic)	Green	White	H.W.
Hot water recirculating (domestic)	Green	White	H.W.R.
High temp. water supply	Yellow	Black	H.T.W.S.
High temp. water return	Yellow	Black	H.T.W.R.
Boiler feed water	Yellow	Black	B.F.
Low temp. water supply (heating)	Yellow	Black	L.T.W.S.
Low temp. water return (heating)	Yellow	Black	L.T.W.R.
Condenser water supply	Green	White	COND. W.S.
Condenser water return	Green	White	COND. W.R.
Chilled water supply	Green	White	C.H.W.S.
Chilled water return	Green	White	C.H.W.R.
Treated water	Yellow	Black	TR. WATER
Chemical feed	Yellow	Black	CH. FEED
Compressed air	Yellow	Black	COMP. AIR
Natural gas	Blue	White	NAT. GAS
Freon	Blue	White	FREON
Fuel oil	Yellow	Black	FUEL OIL
Steam	Yellow	Black	STM.
Condensate	Yellow	Black	COND.

TABLE II. COLOR CODE MARKING SIZES

Outside Diameter of Pipe Covering (mm)	Width of Color Band (mm)	Arrow Length x Width (mm)	Size of Legend Letters and Numerals (mm)
Less than 38	200	200 x 57	13
38 to 60	200	200 x 57	19
60 to 150	300	200 x 57	31
200 to 225	600	300 x 110	63
Over 250	800	300 x 115	88

3.5 MISCELLANEOUS PAINTING

3.5.1 Lettering

Lettering shall be provided as scheduled on the drawings, shall be block type, and shall be black enamel, finished with a protective coating of spar varnish]. Samples shall be approved before application.

3.6 SURFACES TO BE PAINTED

Surfaces listed in the painting schedules at the end of this section, other than those listed in paragraph SURFACES NOT TO BE PAINTED, shall be painted as scheduled.

3.7 SURFACES NOT TO BE PAINTED

Surfaces in the following areas are not to be painted: Unexposed interior ferrous surfaces, and sized vapor barrier jacketing over insulation pipes, in unexposed locations that do not requre color coding. In addition surfaces of hardware, fittings, and other factory finished items shall not be painted.

3.8 CLEANING

Cloths, cotton waste and other debris that might constitute a fire hazard shall be placed in closed metal containers and removed at the end of each day. Upon completion of the work, staging, scaffolding, and containers shall be removed from the site or destroyed in an approved manner. Paint and other deposits on adjacent surfaces shall be removed and the entire job left clean and acceptable.

3.9 PAINTING SCHEDULES

The following painting schedules identify the surfaces to be painted and prescribe the paint to be used and the number of coats of paint to be applied. Contractor options are indicated by ------or------ between optional systems or coats.

EXTERIOR PAINTING SCHEDULE

Surface	First Coat	Second Coat	Third Coat
Ferrous metal unless otherwise specified.	SSPC Paint 25	CID A-A-2962,Type I Class A Grade A	CID A-A-2962,Type I Class A Grade A
Galvanized metal.	FS TT-E-2784 Type III	FS TT-E-2784,TypeII	FS TT-E-2784Type II

INTERIOR PAINTING SCHEDULE

Surface	First Coat	Second Coat	Third Coat
Gypsum Board	CID A-A-2994 Type II	CID A-A-2247	CID A-A-2247
Gypsum Board ceilings in restrooms and janitor rooms unless otherwise specified.	CID A-A-2994 Type II	FS TT-E-2784 Type II	FS TT-E-2784 Type II
Ferrous metal unless otherwise specified.	FS TT-E-2784 Type II	FS TT-E-2784 Type II	
Galvanized metal:	FS TT-E-2784 Type II	Two coats of paint to match adjacent areas	
Metal: Convector enclosures, electrical conduit runs, metallic tubing, uninsulated ducts and pipes, pipe hangers, louvers, grilles, and air outlets in areas having painted adjacent surfaces.	Aluminum and ferrous metal: SSPC Paint 23	FS TT-E-2784 Type II	FS TT-E-2784 Type II
	Galvanized surface: FS TT-P-19	CID A-A-2247	CID A-A-2247
Facing of vapor barrier jackets of presized or adhesive finished cloth over insulation on pipes, ducts,	Two coats of paint to match adjacent areas.		None

INTERIOR PAINTING SCHEDULE

Surface	First Coat	Second Coat	Third Coat
and equipment			
Concrete: floors requiring dust reduction	CID A-A-2542 Type I	None	None

Surface: First Coat Second Coat Third Coat Ferrous Metal Two coats of paint as recommended by the equipment None factory-primedFacing of manufacturer mechanical and electrical equipment.

-- End of Section --

SECTION TABLE OF CONTENTS

DIVISION 10 - SPECIALTIES

SECTION 10800

TOILET ACCESSORIES

PART 1 GENERAL

1.1 SUBMITTALS
1.2 DELIVERY, STORAGE, AND HANDLING

PART 2 PRODUCTS

2.1 MANUFACTURED UNITS
2.1.1 Anchors and Fasteners
2.1.2 Finishes
2.2 ACCESSORY ITEMS
2.2.1 Grab Bar (GB)
2.2.2 Mirror, Metal (MM)
2.2.3 Combination Paper Towel Dispenser/Waste Receptacle Units (PTDWR)
2.2.4 Sanitary Napkin Disposer (SND)
2.2.5 Soap Dispenser (SD)
2.2.6 Shelf, Metal, Light Duty (SMLD)
2.2.7 Toilet Tissue Dispenser (TTD)
2.2.8 Toilet Seat Cover Dispenser (TSCD)

PART 3 EXECUTION

3.1 INSTALLATION
3.2 SCHEDULE

-- End of Section Table of Contents --

SECTION 10800

TOILET ACCESSORIES

PART 1 GENERAL

1.1 SUBMITTALS

Government approval is required for submittals with a "GA" designation, submittals having an "FIO" designation are for information only. The following shall be submitted in accordance with Section 01330 SUBMITTAL PROCEDURES:

SD-01 Data

Finishes; FIO. Accessory Items; FIO.

Manufacturer's descriptive data and catalog cuts indicating materials of construction, fasteners proposed for use for each type of wall construction, mounting instructions, and operation instructions.

SD-14 Samples

Finishes; FIO. Accessory Items; FIO.

One sample of each accessory proposed for use. Approved samples may be incorporated into the finished work, provided they are identified and their locations noted.

1.2 DELIVERY, STORAGE, AND HANDLING

Toilet accessories shall be wrapped for shipment and storage, delivered to the jobsite in manufacturer's original packaging and stored in a clean, dry area protected from construction damage and vandalism.

PART 2 PRODUCTS

2.1 MANUFACTURED UNITS

Toilet accessories shall be provided where indicated in accordance with paragraph SCHEDULE. Each accessory item shall be complete with the necessary mounting plates, shall be of sturdy construction with corrosion resistant surface.

2.1.1 Anchors and Fasteners

Anchors and fasteners shall be capable of developing a restraining force commensurate with the strength of the accessory to be mounted and shall be suited for use with the supporting construction. Exposed fasteners shall have oval heads and shall be finished to match the accessory.

2.1.2 Finishes

Except where noted otherwise, finishes on metal shall be provided as

follows:

Metal	Finish
Stainless steel	No. 4 satin finish
Carbon steel, copper alloy, and brass	Chromium plated, bright

2.2 ACCESSORY ITEMS

Accessory items shall conform to the requirements specified below.

2.2.1 Grab Bar (GB)

Grab bar shall be 1.3 mm (18 gauge) , 32 mm OD Type 304 stainless steel. Grab bar shall be form and length as indicated. Exposed mounting flange shall have set screw mounting holes concealed on the lip of the flange. Grab bar shall have satin finish. Installed bars shall be capable of withstanding a 2.225 kN vertical load without coming loose from the fastenings and without obvious permanent deformation. Space between wall and grab bar shall be 38 mm.

2.2.2 Mirror, Metal (MM)

Metal mirror shall be bright polished stainless steel or chromium plated steel, mirror quality, 0.94 mm minimum thickness, edges turned back 6 mm and recess fitted with tempered hardboard backing, and concealed theft-proof fasteners. Size shall be as shown on drawings.

2.2.3 Combination Paper Towel Dispenser/Waste Receptacle Units (PTDWR)

Dispenser/receptacle shall be semi-recessed and shall have a capacity of 400 sheets of C-fold, single-fold, or quarter-fold towel. Waste receptacle shall be designed to be locked in unit and removable for service. Locking mechanism shall be tumbler key lock. Waste receptacle shall have a capacity of 45 L. Unit shall be fabricated of not less than 0.8 mm stainless steel welded construction with all exposed surfaces having a satin finish. Waste receptacle that accepts reusable liner standard for unit manufacturer shall be provided.

2.2.4 Sanitary Napkin Disposer (SND)

Sanitary napkin disposal shall be constructed of Type 304 stainless steel with removable leak-proof receptacle for disposable liners. Fifty disposable liners of the type standard with the manufacturer shall be provided. Receptacle shall be retained in cabinet by tumbler lock. Disposer shall be provided with a door for inserting disposed napkins, and shall be surface mounted.

2.2.5 Soap Dispenser (SD)

Soap dispenser shall be surface mounted, liquid type consisting of a vertical Type 304 stainless steel tank with holding capacity of 1.2 L with a corrosion-resistant all-purpose valve that dispenses liquid soaps, lotions, detergents and antiseptic soaps.

2.2.6 Shelf, Metal, Light Duty (SMLD)

Light duty metal shelf shall be supported between brackets or on brackets. Brackets shall prevent lateral movement of the shelf. Shelf shall be 600 mm long. Shelf and brackets shall be stainless steel.

2.2.7 Toilet Tissue Dispenser (TTD)

Toilet tissue holder shall be Type II - surface mounted with two rolls of tissue stacked vertically. Cabinet shall be stainless steel, satin finish.

2.2.8 Toilet Seat Cover Dispenser (TSCD)

Toilet seat cover dispensers shall be stainless steel and besurface mounted. Dispenser shall have a minimum capacity of 500 seat covers. Dual access dispensers shall have a minimum capacity of 500 seat covers. Dual access dispensers shall have a minimum capacity of 500 seat covers per side. Combination seat cover dispenser, sanitary napkin disposal and/or toilet tissue dispenser shall meet the requirements of this paragraph, as well paragraph Sanitary Napkin and Tampon Disposer (SND) and paragraph Toilet Tissue Dispenser (TTD) as applicable.

PART 3 EXECUTION

3.1 INSTALLATION

Toilet accessories shall be securely fastened to the supporting construction in accordance with the manufacturer's approved instructions. Accessories shall be protected from damage from the time of installation until acceptance.

3.2 SCHEDULE

Accessories Required

Room or Space	GB	PTDWR	SMLD	SD	TCSD	TTD	SND	WR	MM	SMLD
103 MENS	2	1	1	1	1	1	-	1	1	1
104 WOMENS	2	1	1	1	1	1	1	1	1	1

-- End of Section --

SECTION TABLE OF CONTENTS

DIVISION 13 - SPECIAL CONSTRUCTION

SECTION 13080

SEISMIC PROTECTION FOR MECHANICAL, ELECTRICAL EQUIPMENT

PART 1 GENERAL

1.1 REFERENCES
1.2 SYSTEM DESCRIPTION
1.2.1 General
1.2.2 Mechanical/Electrical Equipment
1.2.3 Mechanical/Electrical Systems
1.2.4 Equipment and Systems
1.2.5 Pipes and Requiring No Special Seismic Restraints
1.2.6 All Other Interior Piping, Conduit
1.3 SUBMITTALS

PART 2 PRODUCTS

2.1 MATERIALS AND EQUIPMENT
2.1.1 Bolts and Nuts
2.1.2 Sway Bracing
2.1.3 Flexible Couplings
2.1.3.1 Flexible Ball Joints
2.1.3.2 Flexible Mechanical Joints
2.1.4 Lighting Fixture Supports

PART 3 EXECUTION

3.1 BRACING AND COUPLING
3.2 BUILDING DRIFT
3.3 FLEXIBLE COUPLINGS OR JOINTS
3.3.1 Building Piping
3.3.2 Underground Piping
3.4 PIPE SLEEVES
3.5 SPREADERS
3.6 ANCHOR BOLTS
3.6.1 Cast-In-Place
3.6.2 Minimum Bolt Sizes, Cast-In-Place Anchor Bolts
3.6.3 Expansion or Chemically Bonded Anchors
3.6.3.1 General Testing
3.6.3.2 Torque Wrench Testing
3.6.3.3 Pullout Testing
3.7 RESILIENT VIBRATION ISOLATION DEVICES
3.7.1 Multidirectional Seismic Snubbers
3.8 SWAY BRACES FOR PIPING
3.8.1 Transverse Sway Bracing
3.8.2 Maximum Span for Transverse Sway Braces in Seismic Zone 4
3.8.3 Longitudinal Sway Bracing
3.8.4 Vertical Runs
3.8.5 Anchor Rods, Angles, and Bars

3.8.6 Maximum Length for Anchor Braces
3.8.7 Clamps and Hangers
3.8.8 Bolts
3.9 SWAY BRACES FOR CONDUIT
3.10 EQUIPMENT SWAY BRACING
3.10.1 Suspended Equipment
3.10.2 Floor or Pad Mounted Equipment
3.10.2.1 Shear Resistance
3.10.2.2 Overturning Resistance
3.11 MISCELLANEOUS EQUIPMENT
3.11.1 Rigidly Mounted Equipment
3.12 LIGHTING FIXTURES IN BUILDINGS
3.12.1 Pendant Fixtures
3.12.2 Recessed Fluorescent Fixtures
3.12.3 Assembly Mounted on Outlet Box
3.12.4 Surface-Mounted Fluorescent Fixtures
3.12.5 Wall-Mounted Emergency Light Unit
3.12.6 Lateral Force

-- End of Section Table of Contents --

SECTION 13080

SEISMIC PROTECTION FOR MECHANICAL, ELECTRICAL EQUIPMENT

PART 1 GENERAL

1.1 REFERENCES

The publications listed below form a part of this specification to the extent referenced. The publications are referred to in the text by basic designation only.

AMERICAN SOCIETY FOR TESTING AND MATERIALS (ASTM)

ASTM A 36	(1996) Carbon Structural Steel
ASTM A 53	(1995a) Pipe, Steel, Black and Hot-Dipped, Zinc-Coated Welded and Seamless
ASTM A 153	(1996) Zinc Coating (Hot-Dip) on Iron and Steel Hardware
ASTM A 307	(1994) Carbon Steel Bolts and Studs, 60,000 PSI Tensile Strength
ASTM A 500	(1993) Cold-Formed Welded and Seamless Carbon Steel Structural Tubing in Rounds and Shapes
ASTM A 563	(1994) Carbon and Alloy Steel Nuts
ASTM A 603	(1994) Zinc-Coated Steel Structural Wire Rope
ASTM A 653	(1996) Steel Sheet, Zinc-Coated (Galvanized) or Zinc-Iron Alloy-Coated (Galvannealed) by the Hot-Dip Process
ASTM E 488	(1990) Strength of Anchors in Concrete and Masonry Elements

AMERICAN SOCIETY OF MECHANICAL ENGINEERS (ASME)

ASME B18.2.1	(1981; Supple 1991; R 1992) Square and Hex Bolts and Screws (Inch Series)
ASME B18.2.2	(1987; R 1993) Square and Hex Nuts (Inch Series)

INTERNATIONAL CONFERENCE OF BUILDING OFFICIALS (ICBO)

ICBO-01	(1994) Uniform Building Code (3 Vol.)

UNDERWRITERS LABORATORIES (UL)

UL 1570	(1995) Fluorescent Lighting Fixtures
UL 1571	(1991; Rev thru Mar 95) Incandescent Lighting Fixtures

1.2 SYSTEM DESCRIPTION

1.2.1 General

The requirements for seismic protection measures described in this section shall be applied to mechanical/electrical equipment and systems specified herein. Seismic protection requirements shall be in accordance with ICBO-01 using an importance factor of 1.0 and shall be provided in addition to any other requirements called for in other sections of these specifications. This facility shall be designed as being in seismic zone 3; no other zone values shall be used to establish bracing requirements. Lateral support against earthquake induced forces shall be accomplished by positive attachments without consideration of friction resulting from gravity loads.

1.2.2 Mechanical/Electrical Equipment

Mechanical/electrical equipment shall include the following items to the extent required on the drawings or in other sections of these specifications:

furnaces
Storage Tanks for
Water Heaters
Water and Gas Piping
Cable Trays
Air Compressor
Control Panels
Switchgear
Light Fixtures
Unit Substations
Transformers
Suspended Ceiling Assemblies
Unit Heaters
Exhaust Fans
Condensing Unit

1.2.3 Mechanical/Electrical Systems

The following mechanical and electrical systems shall be installed as required on the drawings and other sections of these specifications and shall be seismically protected in accordance with this specification:

All Piping Inside the Building in Accordance With This Specification

Piping Outside of Buildings
All Water Supply Systems
Sanitary Sewer Systems

1.2.4 Equipment and Systems

The bracing for the following mechanical/electrical equipment and systems shall be developed by the Contractor in accordance with the requirements of this specification: .

1.2.5 Pipes and Requiring No Special Seismic Restraints

Seismic restraints may be omitted from the following installations:

a. Gas piping less than 25 mm (1 inch) inside diameter.

b. Piping in boiler and mechanical equipment rooms less than 32 mm (1-1/4 inches) inside diameter.

c. All other piping less than 38 mm (1-1/2 inches) inside diameter.

d. Electrical conduit less than 64 mm (2-1/2 inches) inside diameter.

g. Piping suspended by individual hangers 300 mm or less in length from the top of pipe to the bottom of the supporting structural member where the hanger is attached, except as noted below.

In exemptions g. and h. all hangers shall meet the length requirements. If the length requirement is exceeded by one hanger in the run, the entire run shall be braced.

1.2.6 All Other Interior Piping, Conduit

Interior piping, conduit, not covered by paragraphs Exclusion or Pipes Requiring No special Seismic Restraints shall be seismically protected in accordance with the provisions herein.

1.3 SUBMITTALS

Government approval is required for submittals with a "GA" designation; submittals having an "FIO" designation are for information only. The following shall be submitted in accordance with Section 01330 SUBMITTAL PROCEDURES:

SD-01 Data

Bracing and Coupling; FIO. Lighting Fixtures in Buildings; FIO. Miscellaneous Equipment; FIO.

Copies of the design calculations with the detail drawings. Calculations shall be stamped by a registered engineer and shall verify the capability of structural members to which bracing is attached for carrying the load from the brace.

SD-04 Drawings

Bracing and Coupling; FIO. Flexible Couplings or Joints; FIO_. Resilient Vibration Isolation Devices; FIO. . Lighting Fixtures in Buildings; FIO. Miscellaneous Equipment; FIO.

Detail drawings along with catalog cuts, templates, and erection and installation details, as appropriate, for the items listed. Submittals shall be complete in detail; shall indicate thickness, type, grade, class of metal, and dimensions; and shall show construction details, reinforcement, anchorage, and installation with relation to the building construction.

SD-13 Certificates

Flexible Ball Joints; FIO.

Flexible ball joints shall be certified to be suitable for the service intended by the manufacturer, based on not less than 2 years' satisfactory operation in a similar application.

PART 2 PRODUCTS

2.1 MATERIALS AND EQUIPMENT

Materials and equipment shall conform to the requirements specified below:

2.1.1 Bolts and Nuts

Squarehead and hexhead bolts, and heavy hexagon nuts, ASME B18.2.1, ASME B18.2.2, or ASTM A 307 for bolts and ASTM A 563 for nuts. Bolts and nuts used underground and/or exposed to weather shall be galvanized in accordance with ASTM A 153.

2.1.2 Sway Bracing

Material used for members listed in this section and on the drawings, shall be structural steel conforming with the following:

a. Plates, rods, and rolled shapes, ASTM A 36.

b. Wire rope, ASTM A 603.

c. Tubes, ASTM A 500, Grade B .

d. Pipes, ASTM A 53, Type E or S, Grade B.

e. Light gauge angles, less than 6 mm thickness, ASTM A 653 .

2.1.3 Flexible Couplings

Flexible couplings shall have same pressure and temperature ratings as adjoining pip.

2.1.3.1 Flexible Ball Joints

Flexible ball joints shall have cast or wrought steel casing and ball parts capable of 360-degree rotation plus not less than 15-degree angular movement.

2.1.3.2 Flexible Mechanical Joints

a. Mechanical couplings for steel or cast iron pipe shall be of the sleeve type and shall provide a tight flexible joint under all reasonable conditions, such as pipe movement caused by expansion, contraction, slight settling or shifting of the ground, minor variations in trench gradients, and traffic vibrations. Where permitted in other sections of these specifications, joints utilizing split-half couplings with grooved or shouldered pipe ends may be used.

b. Sleeve-type couplings shall be used for joining plain-end pipe sections. The coupling shall consist of one steel middle ring, two steel followers, two gaskets, and necessary steel bolts and nuts to compress the gaskets. Underground bolts shall be high-strength type as specified above.

2.1.4 Lighting Fixture Supports

Fixture supports shall be malleable iron. Lighting fixtures and supports shall conform to UL 1570 or UL 1571 as applicable.

PART 3 EXECUTION

3.1 BRACING AND COUPLING

Bracing and coupling shall conform to the arrangements shown. Provisions of this paragraph apply to all piping within a 1.5 m line around outside of building unless buried in the ground. Piping grouped for support on trapeze-type hangers shall be braced at the same intervals as determined by the smallest diameter pipe of the group. No trapeze-type hanger shall be secured with less than two 13 mm (1/2 inch) bolts. Bracing rigidly attached to pipe flanges, or similar, shall not be used where it would interfere with thermal expansion of piping.

3.2 BUILDING DRIFT

Sway braces for a run shall not be attached to two dissimilar structural elements of a building that may respond differentially during an earthquake unless a flexible joint is provided. Joints capable of accommodating seismic displacements shall be provided where pipes pass through a building seismic or expansion joint, or where rigidly supported pipes connect to equipment with vibration isolators. For threaded piping, swing joints shall be provided. For piping with manufactured ball joints the seismic drift shall be 0.015 _____ meters per meter of height above the base where the seismic separation occurs; this drift value shall be used in place of the expansion given in the manufacturer's selection table.

3.3 FLEXIBLE COUPLINGS OR JOINTS

3.3.1 Building Piping

Flexible couplings or joints in building piping shall be provided at bottom of all pipe risers larger than 90 mm (3-1/2 inches) in diameter. Flexible couplings or joints shall be braced laterally without interfering with the action of the flexible coupling or joint. Cast iron waste and vent piping need only comply with these provisions when caulked joints are used. Flexible bell and spigot pipe joints using rubber gaskets or no-hub fittings may be used at each branch adjacent to tees and elbows for underground waste piping inside of building to comply with these requirements.

3.3.2 Underground Piping

Underground piping and 100 mm (4 inch) or larger conduit, shall have flexible couplings installed where the piping enters the building. The couplings shall accommodate relative movement between the pipe and the building in any direction. Additional flexible couplings shall be provided where shown on the drawings.

3.4 PIPE SLEEVES

Pipe sleeves in interior non-fire rated walls shall be sized as specified elsewhere to provide clearances that will permit differential movement of piping without the piping striking the pipe sleeve.

3.5 SPREADERS

Spreaders shall be provided between adjacent piping runs to prevent contact during seismic activity whenever pipe or insulated pipe surfaces are less than 100 _____ mm apart. Spreaders shall be applied at same interval as sway braces at an equal distance between the sway braces. If rack type hangers are used where the pipes are restrained from contact by mounting to the rack, spreaders are not required for pipes mounted in the rack. Spreaders shall be applied to surface of bare pipe and over insulation on insulated pipes utilizing high-density inserts and pipe protection shields in accordance with the requirements of Section 15250 THERMAL INSULATION FOR MECHANICAL SYSTEMS.

3.6 ANCHOR BOLTS

3.6.1 Cast-In-Place

Floor or pad mounted equipment shall use cast-in-place anchor bolts, except as specified below. Two nuts shall be provided on each bolt. Anchor bolts shall conform to the following tabulation for the various equipment weights and specified seismic zone or the manufacturer's installation recommendations, whichever is the most stringent, unless otherwise shown on the drawings. Anchor bolts that exceed the normal depth of equipment foundation piers or pads shall either extend into concrete floor or the foundation shall be increased in depth to accommodate bolt lengths.

3.6.2 Minimum Bolt Sizes, Cast-In-Place Anchor Bolts

Maximum Equipment Weight (Kg)	Minimum Bolt Sizes (mm)* Zone 4	Zone 3	Zone 2A	Zone 2B	Zone 1
225	13	13	13	13	13
450	13	13	13	13	13
2250	13	13	13	13	13
4500	13	13	13	13	13
9000	13	13	13	13	13
13500	16	13	13	13	13
22500	22	16	13	13	13
45000	**	**	16	22	13

*Based on four bolts per item, a minimum embedment of 12 bolt diameters, a minimum bolt spacing of 16 bolt diameters and a minimum edge distance of 12 bolt diameters. Equivalent total cross-sectional area shall be used when more than four bolts per item are provided. Anchor bolts shall conform to ASTM A 307. Anchor bolts shall have an embedded straight length equal to at least 12 times nominal diameter of the bolt.

**Equipment weighing more than 22,500 kg in Zones 3 and 4 shall have at

least six bolts per item.

3.6.3 Expansion or Chemically Bonded Anchors

Expansion or chemically bonded anchors shall not be used unless test data in accordance with ASTM E 488 has been provided to verify the adequacy of the specific anchor and application. The expansion anchor size shall be not less than that required in paragraph Minimum Bolt Sizes, Cast-In-Place Anchor Bolts. Expansion and chemically bonded anchors shall be installed in accordance with the manufacturer's recommendations. The allowable forces shall be adjusted for the spacing between anchor bolts and the distance between the anchor bolt and the nearest edge, as specified by the manufacturer.

3.6.3.1 General Testing

Expansion and chemically bonded anchors shall be tested in place after installation. The tests shall occur not more than 24 hours after installation of the anchor and shall be conducted by an independent testing agency; testing shall be performed on random anchor bolts as described below.

3.6.3.2 Torque Wrench Testing

Torque wrench testing shall be done on not less than 50 _____ percent of the total installed expansion anchors and at least one anchor _____ anchors for every piece of equipment containing more than two _____ anchors. The test torque shall equal the minimum required installation torque as required by the bolt manufacturer. Torque wrenches shall be calibrated at the beginning of each day the torque tests are performed. Torque wrenches shall be recalibrated for each bolt diameter whenever tests are run on bolts of various diameters. The applied torque shall be between 20 and 100 percent of wrench capacity. The test torque shall be reached within one half turn of the nut, except for 9 mm sleeve anchors which shall reach their torque by one quarter turn of the nut. If any anchor fails the test, similar anchors not previously tested shall be tested until 20 _____ consecutive anchors pass. Failed anchors shall be retightened and retested to the specified torque; if the anchor still fails the test it shall be replaced.

3.6.3.3 Pullout Testing

Expansion and chemically bonded anchors shall be tested by applying a pullout load using a hydraulic ram attached to the anchor bolt. At least 5 _____ percent of the anchors, but not less than three _____ per day shall be tested. The load shall be applied to the anchor without removing the nut; when that is not possible, the nut shall be removed and a threaded coupler shall be installed of the same tightness as the original nut. The test setup shall be checked to verify that the anchor is not restrained from withdrawing by the baseplate, the test fixture, or any other fixtures. The support for the testing apparatus shall be at least 1.5 times the embedment length away from the bolt being tested. Each tested anchor shall be loaded to 1 _____ times the design tension value for the anchor. The anchor shall have no observable movement at the test load. If any anchor fails the test, similar anchors not previously tested shall be tested until 20 _____ consecutive anchors pass. Failed anchors shall be retightened and retested to the specified load; if the anchor still fails the test it shall be replaced.

3.7 RESILIENT VIBRATION ISOLATION DEVICES

Selection of anchor bolts for vibration isolation devices and/or snubbers for equipment base and foundations shall follow the same procedure as in paragraph ANCHOR BOLTS except that an equipment weight equal to five times the actual equipment weight shall be used.

3.7.1 Multidirectional Seismic Snubbers

Multidirectional seismic snubbers employing elastomeric pads shall be installed on all floor- or slab-mounted equipment. These snubbers shall provide 6 mm free vertical and horizontal movement from the static deflection point. Snubber medium shall consist of multiple pads of cotton duct and neoprene or other suitable materials arranged around a flanged steel trunnion so both horizontal and vertical forces are resisted by the snubber medium.

3.8 SWAY BRACES FOR PIPING

Sway braces shall be provided to prevent movement of the pipes under seismic loading. Braces shall be provided in both the longitudinal and transverse directions, relative to the axis of the pipe. The bracing shall not interfere with thermal expansion requirements for the pipes as described in other sections of these specifications.

3.8.1 Transverse Sway Bracing

Transverse sway bracing for steel and copper pipe shall be provided at intervals not to exceed those given in the tabulation below as modified for each seismic zone. All runs shall have a minimum of two transverse braces. Transverse sway bracing for pipes of materials other than steel and copper shall be provided at intervals not to exceed the hanger spacing as specified in Section 15400 PLUMBING, GENERAL PURPOSE.

3.8.2 Maximum Span for Transverse Sway Braces in Seismic Zone 4

Pipe Diameter	Std. Wgt. Steel Pipe - 40S		Ex. Strong Steel Pipe - 80S		Copper Tube Type L	
(mm)	*L(m)	** F(kN)	*L(m)	**F(kN)	*L(m)	**F(kN)
25	6.7	0.30	6.7	0.4	3.4	0.08
40	7.6	0.60	7.9	0.8	3.7	0.16
50	8.8	1.0	9.1	1.3	4.3	0.30
65	9.8	1.7	10.0	2.1	4.8	0.50
80	10.4	2.5	10.7	3.2	5.2	0.70
90	11.0	3.3	11.6	4.1	5.5	1.0
100	11.9	4.3	12.2	5.3	5.8	1.3
125	12.5	6.4	13.4	8.5	6.1	2.1
150	13.7	9.4	14.0	12.2	6.7	3.3
200	14.9	16.6	16.5	22.9	7.9	6.9
250	16.5	27.1	18.0	34.1	8.5	11.7
300	17.7	38.1	18.6	46.0	9.4	17.6

*L = Maximum span between lateral supports multiplied by 1.1 for Zone 3,

**F = Horizontal force on the brace multiplied by 0.8 for Zone 3

NOTE: Bracing shall consist of at least one vertical angle 50 x 50 mm x 16 gauge and one diagonal angle of the same size.

3.8.3 Longitudinal Sway Bracing

Longitudinal sway bracing shall be provided at 12 m intervals except when the location of sway braces is shown on the drawings for the particular piping system. All runs shall have one longitudinal brace minimum. Sway braces shall be constructed in accordance with the drawings. Branch lines, walls, or floors shall not be used as sway braces.

3.8.4 Vertical Runs

Vertical runs of piping shall be braced at not more than 3 m vertical intervals. For tubing, bracing shall be provided at no more than 1.2 m spacing. Vertical braces shall be above the center of gravity of the span being braced. All sway braces shall be constructed in accordance with the drawings. Branch lines, walls, or floors shall not be used as sway braces.

3.8.5 Anchor Rods, Angles, and Bars

Anchor rods, angles, and bars shall be bolted to either pipe clamps or pipe flanges at one end and cast-in-place concrete or masonry insert or clip angles bolted to the steel structure on the other end. Rods shall be solid metal or pipe as specified below. Anchor rods, angles, and bars shall not exceed lengths given in the tabulation below.

3.8.6 Maximum Length for Anchor Braces

Type (kilonewtons)	Size (millimeters)	Maximum Length* (meters)	Allowable Loads*
Angles	38 x 38 x 6	1.5	25.5
	50 x 50 x 6	2.0	34.5
	64 x 38 x 6	2.5	43.5
	75 x 64 x 6	2.5	48.0
	75 x 75 x 6	3.0	53.0
Rods	91	1.0	16.5
	22	1.0	22.0
Flat Bars	38 x 6	0.4	14.0
	50 x 6	0.4	18.0
	50 x 10	0.5	28.5
Pipes (40s)	25	2.0	18.0
	32	2.8	24.5
	40	3.2	29.5
	50	4.0	39.5

*Based on the slenderness ratio of l/r = 200 and ASTM A 36 steel, where l is the length of the brace and r is the least radius of gyration of the brace.

3.8.7 Clamps and Hangers

Clamps or hangers on uninsulated pipes shall be applied directly to pipe. Insulated piping shall have clamps or hangers applied over insulation in accordance with Section 15250 THERMAL INSULATION FOR MECHANICAL SYSTEMS.

3.8.8 Bolts

Bolts used for attachment of anchors to pipe and structure shall be not less than 13 mm (1/2 inch) diameter.

3.9 SWAY BRACES FOR CONDUIT

Conduit shall be braced as for an equivalent weight pipe.

3.10 EQUIPMENT SWAY BRACING

3.10.1 Suspended Equipment

Equipment sway bracing shall be provided for items supported from overhead floor or roof structures. Braces shall consist of angles, rods, wire rope, bars, or pipes arranged as shown and secured at both ends with not less than 13 mm (1/2 inch) bolts. Braces shall conform to paragraph Maximum Length for Anchor Braces. Sufficient braces shall be provided for equipment to resist a horizontal force equal to 1.13 times the weight of equipment without exceeding safe working stress of bracing components. Details of equipment bracing shall be submitted for approval. In lieu of bracing with vertical supports, these items may be supported with hangers inclined at 45 degrees directed up and radially away from equipment and oriented symmetrically in 90-degree intervals on the horizontal plane, bisecting the angles of each corner of the equipment, provided that supporting members are properly sized to support operating weight of equipment when hangers are inclined at a 45-degree angle.

3.10.2 Floor or Pad Mounted Equipment

3.10.2.1 Shear Resistance

Floor mounted equipment shall be bolted to the floor. Requirements for the number and installation of bolts to resist shear forces shall be in accordance with paragraph ANCHOR BOLTS.

3.10.2.2 Overturning Resistance

The ratio of the height of the equipment (measured from the base to the center of gravity of the equipment) to the minimum distance between anchor bolts shall be used to determine if overturning forces need to be considered in the sizing of anchor bolts. If this ratio is greater than 2.22 the bolt values in paragraph Minimum Bolt Sizes, Cast-In-Place Anchor Bolts shall not be used and calculations shall be provided to verify the adequacy of the anchor bolts for combined shear and overturning.

3.11 MISCELLANEOUS EQUIPMENT

3.11.1 Rigidly Mounted Equipment

The following specific items of equipment to be furnished under this contract shall be constructed and assembled to withstand a horizontal lateral force of 0.23 times the operating weight of the equipment, at vertical center of gravity of the equipment without causing permanent deformation, dislocations, separation of components, or other damage, which would render the equipment inoperative for significant periods of time following an earthquake.

Rigidly Mounted Equipment

Furnace

Substations
Transformers
Switch Boards and Switch Gears

Condensing Unit

3.12 LIGHTING FIXTURES IN BUILDINGS

Lighting fixtures and supports shall conform to the following:

3.12.1 Pendant Fixtures

Loop and hook or swivel hanger assemblies for pendant fixtures shall be fitted with a restraining device to hold the stem in the support position during earthquake motions. Pendant-supported fluorescent fixtures shall also be provided with a flexible hanger device at the attachment to the fixture channel to preclude breaking of the support. The motion of swivels or hinged joints shall not cause sharp bends in conductors or damage to insulation.

3.12.2 Recessed Fluorescent Fixtures

Recessed fluorescent individual or continuous-row mounted fixtures shall be supported by a seismic-resistant suspended ceiling support system and shall be fastened thereto at each corner of the fixture with bolts or approved clips; or shall be provided with fixture support wires attached to the building structural members using two wires for individual fixtures, attached to opposite corners, and one wire per unit of continuous row mounted fixtures. Each wire support shall be capable of supporting four times the weight of the fixture. Recessed lighting fixtures not over 25 kg in weight and suspended or pendant-hung fixtures not over 10 kg in weight may be supported by and attached directly to the ceiling system runners by a positive attachment such as screws or bolts, number and size as required by design seismic zone. Fixture accessories, including louvers, diffusers, and lenses shall have lock or screw attachments.

3.12.3 Assembly Mounted on Outlet Box

A supporting assembly that is intended to be mounted on an outlet box shall

be designed to accommodate mounting features on 100 mm boxes, 75 mm plaster rings, and fixture studs.

3.12.4 Surface-Mounted Fluorescent Fixtures

Surface-mounted fluorescent individual or continuous-row fixtures shall be attached to a seismic-resistant ceiling support system. Fixture support devices for attaching to suspended ceilings shall be a locking-type scissor clamp or a full loop band that will securely attach to the ceiling support. Fixtures attached to underside of a structural slab shall be properly anchored to the slab at each corner of the fixture.

3.12.5 Wall-Mounted Emergency Light Unit

Each wall-mounted emergency light unit shall be secured to remain in place during a seismic disturbance.

3.12.6 Lateral Force

Light fixture bracing shall be designed to resist a lateral force of 1.13 1.50 times the fixture weight.

-- End of Section --

SECTION TABLE OF CONTENTS

DIVISION 13 - SPECIAL CONSTRUCTION

SECTION 13120

STANDARD METAL BUILDING SYSTEMS

PART 1 GENERAL

1.1 REFERENCES
1.2 GENERAL
1.2.1 Building Configuration
1.2.2 Manufacturer
1.2.3 Installer
1.3 DESIGN REQUIREMENTS
1.3.1 Design Conditions
1.3.1.1 Dead Load
1.3.1.2 Collateral Loads
1.3.1.3 Roof Live Loads
1.3.1.4 Roof Snow Loads
1.3.1.5 Wind Loads
1.3.1.6 Auxiliary Loads
1.3.1.7 Concentrated Loads
1.3.1.8 Seismic Loads
1.3.2 Foundation Requirements
1.3.3 Framing and Structural Members
1.3.4 Exterior Covering
1.3.5 Gutters And Downspouts
1.3.6 Louvers
1.3.8 Drift Provision
1.4 SUBMITTALS
1.5 DELIVERY AND STORAGE
1.6 GUARANTEE

PART 2 PRODUCTS

2.1 BUILDING COMPONENTS
2.2 FRAMING AND STRUCTURAL MEMBERS
2.3 ROOF AND WALL COVERING
2.3.1 Roof Panels
2.3.2 Wall Panels
2.3.3 Steel Covering
2.3.4 Aluminum Covering
2.3.5 Factory Color Finish
2.3.5.1 Salt Spray Test
2.3.5.2 Formability Test
2.3.5.3 Accelerated Weathering, Chalking Resistance and Color Change
2.3.5.4 Humidity Test
2.3.5.5 Impact Resistance
2.3.5.6 Abrasion Resistant Test
2.3.5.7 Specular Gloss
2.3.5.8 Pollution Resistance
2.3.6 Accessories
2.4 FASTENERS
2.4.1 Screws

2.4.2 End-Welded Studs
2.4.3 Explosive Actuated Fasteners
2.4.4 Blind Rivets
2.4.5 Bolts
2.5 GUTTERS AND DOWNSPOUTS
2.6 LOUVERS
2.7 DOORS
2.7.1 Hinged Doors
2.7.2 Overhead Rolling Doors
2.8 WINDOWS
2.9 INSULATION
2.9.1 Insulation Retainers
2.10 SEALANT
2.11 GASKETS AND INSULATING COMPOUNDS
2.12 VAPOR RETARDER
2.12.1 Vapor Retarders as Integral Facing
2.12.2 Vapor Retarders Separate from Insulation
2.12.3 Slip Sheet for Use With Vapor Retarder
2.13 SHOP PRIMING
2.14 LIGHT TRANSMITTING ROOF PANELS

PART 3 EXECUTION

3.1 ERECTION
3.1.1 General
3.1.2 Framing and Structural Members
3.1.3 Wall Covering and Roof Covering
3.1.3.2 Concealed Fastener Wall Panels
3.1.4 Gutters and Downspouts
3.1.5 Louvers and Ventilators
3.1.6 Doors and Windows
3.2 FIELD PAINTING

-- End of Section Table of Contents --

SECTION 13120

STANDARD METAL BUILDING SYSTEMS

PART 1 GENERAL

1.1 REFERENCES

The publications listed below form a part of this specification to the extent referenced. The publications are referred to in the text by basic designation only.

ALUMINUM ASSOCIATION (AA)

AA-01	(1993) Aluminum Standards and Data
AA SAS-30	(1986) Aluminum Construction Manual Series - Section 1 Specifications for Aluminum Structures

AMERICAN INSTITUTE OF STEEL CONSTRUCTION (AISC)

AISC FCD-90	(1990) AISC Quality Certification Program Description
AISC-S335	(1989) Specification for Structural Steel Buildings - Allowable Stress Design and Plastic Design

AMERICAN IRON AND STEEL INSTITUTE (AISI)

AISI SG-673	(1987) Cold-Formed Steel Design Manual

AMERICAN SOCIETY FOR TESTING AND MATERIALS (ASTM)

ASTM A 36	(1994a) Carbon Structural Steel
ASTM A 53	(1993a) Pipe, Steel, Black and Hot-Dipped, Zinc-Coated Welded and Seamless
ASTM A 252	(1993) Welded and Seamless Steel Pipe Piles
ASTM A 446	(1993) Steel Sheet, Zinc-Coated (Galvanized) by the Hot-Dip Process, Structural (Physical) Quality
ASTM A 463	(1994) Steel Sheet, Aluminum-Coated by the Hot-Dip Process
ASTM A 500	(1993) Cold-Formed Welded and Seamless Carbon Steel Structural Tubing in Rounds and Shapes
ASTM A 501	(1993) Hot-Formed Welded and Seamless Carbon Steel Structural Tubing

ASTM A 529	(1994) High-Strength Carbon-Manganese Steel of Structural Quality
ASTM A 570	(1992; R 1993) Steel, Sheet and Strip, Carbon, Hot-Rolled, Structural Quality
ASTM A 572	(1994b) High-Strength Low-Alloy Columbium-Vanadium Structural Steel
ASTM A 588	(1994) High-Strength Low-Alloy Structural Steel with 50 ksi (345 MPa) Minimum Yield Point to 4 in. (100 mm) Thick
ASTM A 606	(1991a; R 1993) Steel, Sheet and Strip, High-Strength, Low-Alloy, Hot-Rolled and Cold-Rolled, with Improved Atmospheric Corrosion Resistance
ASTM A 607	(1992a) Steel, Sheet and Strip, High-Strength, Low-Alloy, Columbium or Vanadium, or Both, Hot-Rolled and Cold-Rolled
ASTM A 618	(1993) Hot-Formed Welded and Seamless High-Strength Low-Alloy Structural Tubing
ASTM A 792	(1993a) Steel Sheet, 55% Aluminum-Zinc Alloy-Coated by the Hot-Dip Process, General Requirements
ASTM B 117	(1994) Operating Salt Spray (Fog) Testing
ASTM B 209	(1993) Aluminum and Aluminum-Alloy Sheet and Plate
ASTM B 221	(1993) Aluminum and Aluminum-Alloy Extruded Bars, Rods, Wire, Shapes, and Tubes
ASTM B 241	(1995) Aluminum and Aluminum-Alloy Seamless Pipe and Seamless Extruded Tube
ASTM B 308	(1995) Aluminum-Alloy 6061-T6 Standard Structural Shapes
ASTM B 429	(1992a) Aluminum-Alloy Extruded Structural Pipe and Tube
ASTM D 522	(1993a) Mandrel Bend Test of Attached Organic Coatings
ASTM D 523	(1989; R 1993) Specular Gloss
ASTM D 714	(1987; R 1994) Evaluating Degree of Blistering of Paints
ASTM D 968	(1993) Abrasion Resistance of Organic

	Coatings by Falling Abrasive
ASTM D 1308	(1987; R 1993) Effect of Household Chemicals on Clear and Pigmented Organic Finishes
ASTM D 1654	(1992) Evaluation of Painted or Coated Specimens Subjected to Corrosive Environments
ASTM D 2244	(1993) Calculation of Color Differences from Instrumentally Measured Color Coordinates
ASTM D 2247	(1994) Testing Water Resistance of Coatings in 100 % Relative Humidity
ASTM D 2794	(1993) Resistance of Organic Coatings to the Effects of Rapid Deformation (Impact)
ASTM D 3359	(1995) Measuring Adhesion by Tape Test
ASTM D 4214	(1989) Evaluating the Degree of Chalking of Exterior Paint Films
ASTM G 23	(1995) Operating Light-Exposure Apparatus (Carbon-Arc Type) With and Without Water for Exposure of Nonmetallic Materials

METAL BUILDING MANUFACTURERS ASSOCIATION (MBMA)

MBMA-01	(1986; Errata; Supple 1990) Low Rise Building Systems Manual

SHEET METAL & AIR CONDITIONING CONTRACTORS' NATIONAL ASSOCIATION (SMACNA)

SMACNA-1013	(1993) Architectural Sheet Metal Manual

1.2 GENERAL

1.2.1 Building Configuration

Buildings shall have vertical walls and gable roofs. Roof slope shall be as indicated. Buildings shall be single-span structures with rigid frame (tapered beam or plate girder) framing system. Building dimensions shall be as standard with the manufacturer and not less than those indicated, but exceeding the indicated dimensions only by the amount of the closest standard size thereto. Eave height shall be measured from the top of the finished floor to the intersection of the insides of the roof and sidewall sheets. The clear opening between the finished floor and the bottom of the roof steel shall be as indicated.

1.2.2 Manufacturer

Metal building shall be the product of a recognized metal building systems manufacturer who has been in the practice of manufacturing metal buildings

for a period of no less than 5 years. The manufacturer shall be chiefly engaged in the practice of designing and fabricating metal building systems. The manufacturer shall have an AISC Quality Certification, category MB in accordance with AISC FCD-90.The manufacture shall provide an inspector at the site periodically for quality control and warranty reasons. The inspector shall provide a final inspection report.

1.2.3 Installer

Erector shall have specialized experience in the erection of metal building systems for a period of at least 3 years.

1.3 DESIGN REQUIREMENTS

1.3.1 Design Conditions

Loading combinations and definitions shall be in accordance with MBMA-01. Loading criteria as set out by MBMA-01 shall apply.

1.3.1.1 Dead Load

The dead load shall consist of the weight of the structural frame and all other materials of the building system.

1.3.1.2 Collateral Loads

Collateral load of 383 Pa shall be applied to the entire structure to account for the weight of additional permanent materials other than the building system, such as sprinklers, mechanical systems, electrical systems, hung partitions, and ceilings. This allowance does not include the weight of hung equipment weighing 25 kg or more. Equipment loads of 25 kg or more shall be investigated and the structure (frame, purlins, girts) shall be strengthened as required. The Contractor is responsible for providing the building manufacturer the magnitude and approximate location of all concentrated loads greater than 25 kg.

1.3.1.3 Roof Live Loads

Roof live loads shall be determined and applied in accordance with MBMA-01.

1.3.1.4 Roof Snow Loads

The design snow loads shall be in accordance with MBMA_01. Ground snow load = 1.2 kPa.

1.3.1.5 Wind Loads

Wind pressures shall be computed and applied in accordance with MBMA-01 unless otherwise shown or directed by the Contracting Officer.

1.3.1.6 Auxiliary Loads

Auxiliary (dynamic live) loads such as superimposed loads resulting from building machinery, craneways, and vehicles shall be as shown in the drawings. The Contractor shall verify that the auxiliary loads shown on the drawings exceed the loads imposed by the equipment supplied.

1.3.1.7 Concentrated Loads

Concentrated loads shall be applied at locations indicated on the drawings.

1.3.1.8 Seismic Loads

Seismic loads shall be computed for seismic zone 3 in accordance with MBMA-01 using an importance factor of 1.0.

1.3.2 Foundation Requirements

Foundations have been designed and shown on the drawings. Metal-building manufacturer shall review/check the foundation design, if any deficiency is found, then the metal-building manufacturer shall re-design the foundations by a Registered Professional Engineer which shall be submitted for approval by the Contracting Officer. Any associated design cost shall not result in an additional cost to the Government. Foundations shall be designed for an allowable soil bearing pressure of 144 KPa , a minimum bottom of footing depth of 900 mm below finish floor elevation, a factor of safety of 1.5 for overturning, sliding and uplift, and a concrete compressive strength as specified in Section 03300 CONCRETE FOR BUILDING CONSTRUCTION.

1.3.3 Framing and Structural Members

Structural steel members and their connections shall be designed in accordance with AISC-S335. Structural cold-formed steel framing members and their connections shall be designed in accordance with AISI SG-673. Aluminum structural members and their connections shall be designed in accordance with AA SAS-30. Framed openings shall be designed to structurally replace the covering and framing displaced. The allowable live load deflection of roof elements shall not exceed 1/180th of the span. Members with openings in their webs shall be designed with consideration of the additional stresses which will result due to the openings. Deflections of the steel framing above and along the side of rolling door openings shall be limited to a maximum of 1/2 of the allowable movement in the barrel of the roll-up doors to ensure proper operation of the doors.

1.3.4 Exterior Covering

Except as otherwise specified, steel covering shall be designed in accordance with AISI SG-673. Aluminum covering shall be designed in accordance with the AA-01. Section modulus and moment of inertia of aluminum sheet shall be determined for actual cross section dimensions by the conventional methods for actual design stresses and by effective width concept for deflection in accordance with AA SAS-30. Maximum deflection for wall and roof panels under full dead and live and/or wind loads shall not exceed 1/180th of the span between supports. The design analysis shall establish that the roof when deflected under dead plus live or snow loads, will not result in a negative gradient. Maximum deflections shall be based on sheets continuous across two or more supports with sheets unfastened and fully free to deflect. In addition to the loads indicated above, the roof decking shall be designed for a 900 N concentrated load at midspan on a 305 mm (12 inch) wide section of deck. Panels shall not be used for diaphragms. The methods for resisting lateral loads shall be cross-bracing, rigid frames, or wind columns.

1.3.5 Gutters And Downspouts

Gutters and downspouts shall be designed according to the requirements of SMACNA-1013 for storms which should be exceeded only once in 5 years and with adequate provisions for thermal expansion and contraction. Supports

for gutters and downspouts shall be designed for the anticipated loads.

1.3.6 Louvers

Louvers shall be rainproof and equipped with insect screens.

1.3.8 Drift Provision

Lateral deflections, or drift at the roof level of a structure in relation to the floor or slab on grade, caused by deflection of horizontal force resisting elements shall conform to MBMA-01.

1.4 SUBMITTALS

Government approval is required for submittals with a "GA" designation; submittals having an "FIO" designation are for information only. The following shall be submitted in accordance with Section 01300 SUBMITTAL PROCEDURES:

SD-01 Data

Design Analysis; FIO.

Design analysis as one package with the detail drawings. The design analysis signed by a Registered Professional Engineer shall include a list of the design loads, and complete calculations for the building, its components, and the foundations. Formulas and references shall be identified. Assumptions and conclusions shall be explained, and cross-referencing shall be clear. The design analysis shall include, but not be limited to, the following wind and seismic information:

a. Wind forces on various parts of the structure. Both positive and negative pressures shall be calculated with the controlling pressure summarized.

b. Lateral forces due to seismic loading.

Computer programmed designs shall be accompanied by stress values and a letter of certification, signed by a Registered Professional Engineer, stating the design criteria and procedures used and attesting to the adequacy and accuracy of the design. A narrative of the computer program delineating the basic methodology shall be included in the submittal. The program output shall be annotated and supplemented with sketches to make it easier for an engineer unfamiliar with the program to verify the input and output. Critical load conditions used in the final sizing of the members shall be emphasized. The design analysis shall include the name and office phone number of the designer and checker who function as a point of contact to answer questions during the detail-drawing review.

SD-04 Drawings

Metal Building Systems; FIO.

Detail drawings consisting of catalog cuts, design and erection drawings containing an isometric view of the roofs and walls showing the design wind uplift pressure and dimensions of edge and corner zones; shop painting and finishing specifications, instruction manuals, manufacturer's recommended erection methods and procedures and other data as necessary to clearly describe design, material, sizes, layouts, construction details, fasteners,

and erection. Manufacturer's recommended erection methods and procedures shall describe the basic sequence of assembly, temporary bracing, shoring, and related information necessary for erection of the metal building including its structural framework and components. A brief list of locations where buildings of similar design have been used shall be included with the detail drawings and shall include information regarding date of installation, name and address of owner, and how the structure is used.

SD-08 Statements

Qualifications; FIO.

Qualifications of the manufacturer, and qualifications and experience of the building erector.

SD-13 Certificates

Metal Building Systems; GA.

A Certificate from the metal building manufacturer stating that the metal building was designed from a complete set of the contract drawings and specifications and that the building furnished complies with the specified requirements.

Mill certification for structural bolts, framing steel, wall and roof covering, and wall liner panels.

SD-14 Samples

Accessories; FIO.

One sample of each type of flashing, trim, closure, cap and similar items. Size shall be sufficient to show construction and configuration.

Roof and Wall Covering; FIO.

One piece of each type and finish (exterior) to be used, 250 mm long, full width. The sample for factory color finished covering shall be accompanied by certified laboratory test reports showing that the sheets to be furnished are produced under a continuing quality control program and that a representative sample consisting of not less than 5 pieces has been tested and has met the quality standards specified for factory color finish.

Fasteners; FIO.

Two samples of each type to be used, with statement regarding intended use. If so requested, random samples of bolts, nuts, and washers as delivered to the jobsite shall be taken in the presence of the Contracting Officer and provided to the Contracting Officer for testing to establish compliance with specified requirements.

Gaskets and Insulating Compounds; FIO.

Two samples of each type to be used and descriptive data.

Sealant; FIO.

One sample, approximately 0.5 kg, and descriptive data.

Wall Liners; FIO.

One piece, 250 mm long, full width.

1.5 DELIVERY AND STORAGE

Materials shall be delivered to the site in a dry and undamaged condition and stored out of contact with the ground. Materials other than framing and structural members shall be covered with weathertight coverings and kept dry. Storage accommodations for roof and wall covering shall provide good air circulation and protection from surface staining.

1.6 GUARANTEE

The metal building system shall be guaranteed against water leaks arising out of or caused by ordinary wear and tear by the elements for a period of 20 years. Such guarantee shall start upon final acceptance of the work or the date the Government takes possession, whichever is earlier.

PART 2 PRODUCTS

2.1 BUILDING COMPONENTS

Each piece or part of the assembly shall be clearly and legibly marked to correspond with the detail drawings.

2.2 FRAMING AND STRUCTURAL MEMBERS

Steel 3.2 mm or more in thickness shall conform to ASTM A 36, ASTM A 529, ASTM A 572, or ASTM A 588. Uncoated steel less than 3.2 mm in thickness shall conform to ASTM A 570, ASTM A 606, or ASTM A 607. Galvanized steel shall conform to ASTM A 446, G 90 coating designation, 1.143 mm minimum thickness. Aluminum-zinc coated steel shall conform to ASTM A 792, AZ 55 coating designation, 1.143 mm minimum thickness. Aluminum sheet shall conform to ASTM B 209, 0.813 mm minimum thickness. Aluminum structural shapes and tubes shall conform to ASTM B 221, or ASTM B 308. Structural pipe shall conform to ASTM A 53, ASTM A 252, ASTM A 500, ASTM A 501, ASTM A 618, ASTM B 221, ASTM B 241 or ASTM B 429. Holes for bolts shall be made in the shop.

2.3 ROOF AND WALL COVERING

Panels shall be either steel or aluminum and shall have a factory color finish. Length of sheets shall be sufficient to cover the entire length of any unbroken roof slope or the entire height of any unbroken wall surface. Width of sheets with overlapping configurations shall provide not less than 609.6 mm of coverage in place, and those with interlocking ribs shall provide not less than 304.8 mm of coverage in place. Design provisions shall be made for thermal expansion and contraction consistent with the type of system to be used. All sheets shall be square cut, except gable end wall sheets may be cut in the shop to correspond to the roof slope and may have a horizontal joint at the eave line.

2.3.1 Roof Panels

See SECTION 07416 STRUCTURAL STANDING SEAM METAL ROOF

2.3.2 Wall Panels

Wall panels shall have configurations for overlapping adjacent sheets or interlocking ribs for securing adjacent sheets. Wall covering shall be fastened to framework using or concealed fasteners.

2.3.3 Steel Covering

Zinc-coated steel conforming to ASTM A 446, G 90 coating designation; aluminum-zinc alloy coated steel conforming to ASTM A 792. AZ 55 coating; or aluminum-coated steel conforming to ASTM A 463, Type 2, coating designation T2 65. Panels shall be 0.610 mm thick minimum, except that when the mid field of the roof is subject to design wind uplift pressures of 2.87 kPa or greater or the steel covering is used as a diaphragm the entire roof system shall have a minimum thickness of 0.762 mm .

2.3.4 Aluminum Covering

Alloy conforming to ASTM B 209, temper as required for the forming operation, minimum 0.813 mm thick.

2.3.5 Factory Color Finish

Wall and roof panels shall have a factory applied polyvinylidene fluoride finish on the exposed side. The exterior finish shall consist of a Primer and backer coat with a total dry film thickness. Color shall match the color indicated on the drawings. The exterior coating shall be a nominal 0.025 mm thickness consisting of a polyvinylidene fluoride topcoat of not less than 0.018 mm dry film thickness and the paint manufacturer's recommended primer of not less than 0.005 mm thickness. The interior color finish shall consist of a backer coat with a dry film thickness of 0.013 mm. The exterior color finish shall meet the test requirements specified below.

2.3.5.1 Salt Spray Test

A sample of the sheets shall withstand a salt spray test for a minimum of 1000 hours in accordance with ASTM B 117, including the scribe requirement in the test. Immediately upon removal of the panel from the test, the coating shall receive a rating of not less than 8F, few No. 8 blisters, as determined by ASTM D 714; and a rating of 6, 3 mm failure at scribe, as determined by ASTM D 1654.

2.3.5.2 Formability Test

When subjected to testing in accordance with ASTM D 522, the coating film shall show no evidence of fracturing to the naked eye.

2.3.5.3 Accelerated Weathering, Chalking Resistance and Color Change

A sample of the sheets shall be tested a minimum of 1000 hours in accordance with ASTM G 23, using a Type EH apparatus with cycles of 60 minutes radiation and 60 minutes condensing humidity. The coating shall withstand the weathering test without cracking, peeling, blistering, loss of adhesion of the protective coating, or corrosion of the base metal.

Protective coating that can be readily removed from the base metal with tape in accordance with ASTM D 3359, Test Method B, shall be considered as an area indicating loss of adhesion. Following the accelerated weathering test, the coating shall have a chalk rating not less than No. 8 in accordance with ASTM D 4214 test procedures, and the color change shall not exceed 5 CIE or Hunter Lab color difference (delta E) units in accordance with ASTM D 2244.

2.3.5.4 Humidity Test

When subjected to a humidity cabinet in accordance with ASTM D 2247 for 1000 hours, a scored panel shall show no signs of blistering, cracking, creepage or corrosion.

2.3.5.5 Impact Resistance

Factory-painted sheet shall withstand direct and reverse impact in accordance with ASTM D 2794 equal to 1.5 times metal thickness in millimeters , expressed in Newton meters, with no loss of adhesions.

2.3.5.6 Abrasion Resistant Test

When subjected to the falling sand test in accordance with ASTM D 968, the coating system shall withstand a minimum of 80 liters of sand before the appearance of the base metal. The term "appearance of base metal" refers to the metallic coating on steel or the aluminum base metal.

2.3.5.7 Specular Gloss

Finished roof surfaces shall have a specular gloss value of 10 or less at an angle of 85 degrees when measured in accordance with ASTM D 523.

2.3.5.8 Pollution Resistance

Coating shall show no visual effects when immersion tested in a 10 percent hydrochloric acid solution for 24 hours in accordance with ASTM D 1308.

2.3.6 Accessories

Flashing, trim, metal closure strips and curbs, fascia, caps, diverters, downspouts, gutters and similar metal accessories shall be not less than the minimum thickness specified for covering. Accessories shall be compatible with the system furnished. Exposed metal accessories shall be finished to match the covering building finish. Molded closure strips shall be bituminous-saturated fiber, closed-cell or solid-cell synthetic rubber or neoprene, or polyvinyl chloride premolded to match configuration of the covering and shall not absorb or retain water.

2.4 FASTENERS

Fasteners for steel wall and roof panels shall be zinc-coated steel, aluminum, corrosion resisting steel, type and size specified below or as otherwise approved for the applicable requirements. Fasteners for aluminum wall and roof panels shall be aluminum or corrosion resisting steel. Fasteners for structural connections shall provide both tensile and shear strength of not less than 3.34 kN per fastener. Fasteners for accessories shall be the manufacturer's standard. Exposed roof fasteners shall be gasketed or have gasketed washers on the exterior side of the covering to waterproof the fastener penetration. Washer material shall be

compatible with the covering; have a minimum diameter of 10 mm for structural connections; and gasketed portion of fasteners or washers shall be neoprene or other equally durable elastomeric material approximately 3.2 mm thick. When wall covering is factory color finished, exposed roof and wall fasteners shall be color finished or provided with plastic color caps to match the covering. Nonpenetrating fastener system using concealed clips shall be manufacturer's standard for the system provided.

2.4.1 Screws

Screws shall be as recommended by the manufacturer to meet the strength design requirements of the panels.

2.4.2 End-Welded Studs

Automatic end-welded studs shall be shouldered type with a shank diameter of not less than 4.8 mm and cap or nut for holding covering against the shoulder.

2.4.3 Explosive Actuated Fasteners

Fasteners for use with explosive actuated tools shall have a shank diameter of not less than 3.68 mm with a shank length of not less than 12.7 mm for fastening panels to steel and not less than 25.4 mm for fastening panels to concrete.

2.4.4 Blind Rivets

Blind rivets shall be aluminum with 4.8 mm nominal diameter shank or stainless steel with 3.2 mm nominal diameter shank. Rivets shall be threaded stem type if used for other than the fastening of trim. Rivets with hollow stems shall have closed ends.

2.4.5 Bolts

Bolts shall be not less than 6.4 mm diameter, shouldered or plain shank as required, with proper nuts.

2.5 GUTTERS AND DOWNSPOUTS

Gutters and downspouts shall be fabricated of aluminum, zinc-coated steel or aluminum-zinc alloy coated steel and shall have manufacturer's standard factory color finish. Minimum uncoated thickness of materials shall be 0.455 mm for steel and 0.8128 mm for aluminum. All accessories necessary for the complete installation of the gutters and downspouts shall be furnished. Accessories shall include gutter straps, downspout elbows, downspout straps and fasteners fabricated from metal compatible with the gutters and downspouts.

2.6 LOUVERS

Louvers shall be fabricated of aluminum, zinc-coated steel, or aluminum-zinc alloy coated steel; shall have manufacturer's standard factory color finish; and shall be furnished with insect screens. Minimum uncoated thickness of materials shall be 1.214 mm for steel and 1.600 mm for aluminum. .

2.7 DOORS

2.7.1 Hinged Doors

Hinged doors and frames shall conform to the requirements of Section 08110 STEEL DOORS AND FRAMES. Exterior doors shall have top edges closed flush and sealed against water penetration. Hardware shall be as specified in Section 08700 BUILDERS' HARDWARE.

2.7.2 Overhead Rolling Doors

Overhead rolling doors shall be industrial type of standard manufacture, fabricated of 0.864 mm or heavier galvanized or aluminum-zinc alloy coated steel and shall comply with Section 08330 OVERHEAD ROLLING DOORS..

2.8 WINDOWS

Windows shall be of steel in accordance with Section 08510 STEEL WINDOWS.

2.9 INSULATION

Thermal resistance of insulation shall be not less than the Rsi-values shown on the contract drawings. Insulation shall conform to the requirements of Section 06100 ROUGH CARPENTRY.

2.9.1 Insulation Retainers

Retainers shall be type, size and design necessary to adequately hold the insulation and to provide a neat appearance. Metallic retaining members shall be nonferrous or have a nonferrous coating. Nonmetallic retaining members, including adhesives used in conjunction with mechanical retainers or at insulation seams, shall have a fire resistance classification not less than that permitted for the insulation.

2.10 SEALANT

Sealant shall be an elastomeric type containing no oil or asphalt. Exposed sealant shall be colored to match adjacent panels with the brand and type as recommended by panel manufacturerr and shall cure to a rubberlike consistency. Concealed sealant may be the nonhardening type.

2.11 GASKETS AND INSULATING COMPOUNDS

Gaskets and insulating compounds shall be nonabsorptive and suitable for insulating contact points of incompatible materials. Insulating compounds shall be nonrunning after drying.

2.12 VAPOR RETARDER

2.12.1 Vapor Retarders as Integral Facing

Insulation facing shall have a permeability of 5.7 ng per Pa-second-square meter or less when tested in accordance with ASTM E 96. Facing shall be of reinforced foil with a vinyl finish; except that unreinforced foil with a natural finish may be used in concealed locations. Facings and finishes shall be factory applied.

2.12.2 Vapor Retarders Separate from Insulation

Vapor retarder material shall be polyethylene sheeting conforming to the requirements of ASTM D 4397. A single ply of 0.25 mm polyethylene sheet;

or, at the option of the Contractor, a double ply of 0.15 mm polyethylene sheet shall be used. A fully compatible polyethylene tape shall be provided which has equal or better water vapor control characteristics than the vapor retarder material. A cloth industrial duct tape in a utility grade shall also be provided to use as needed to protect the vapor retarder from puncturing.

2.12.3 Slip Sheet for Use With Vapor Retarder

Slip sheet for use with vapor retarder shall be a 0.24 kg per square meter rosin-sized, unsaturated building paper.

2.13 SHOP PRIMING

Ferrous surfaces shall be cleaned of oil, grease, loose rust, loose mill scale, and other foreign substances and shop primed. Primer coating shall be in accordance with SSPC Paint 25.

2.14 LIGHT TRANSMITTING ROOF PANELS

Standard with the manufacturer of a nominal size of size indicated. The light transmitting roof panels shall consist of an interior and exterior plastic face with a sealed airspace of 25 to 37 mm . The exterior plastic face shall be not less than 1.4 mm thickness and shall have the same configurations as the roofing panels. The interior plastic face shall be not less than 0.9 mm thickness. Plastic faces shall be fiberglass consisting of polyester synthetic resin reinforced with a fibrous glass mat and rated self-extinguishing by Underwriters Laboratories Inc. The "U" factor of the light transmitting roof panels shall not be more than 0.50.

PART 3 EXECUTION

3.1 ERECTION

3.1.1 General

Erection shall be in accordance with the approved erection instructions and drawings and with applicable provision of AISC-S335. The completed buildings shall be free of excessive noise from wind-induced vibrations under the ordinary weather conditions to be encountered at the location where the building is erected, and meet all specified design requirements. Dissimilar materials which are not compatible when contacting each other shall be insulated from each other by means of gaskets or insulating compounds. Framing members fabricated or modified on site shall be saw or abrasive cut; bolt holes shall be drilled. On-site flame cutting of framing members, with the exception of small access holes in structural beam or column webs, shall not be permitted. Improper or mislocated drill holes shall be plugged with an oversize screw fastener and gasketed washer; however, sheets with an excess of such holes or with such holes in critical locations shall not be used. Improper or mislocated bolt holes in structural members or other misfits caused by improper fabrication or erection, shall be repaired in accordance with AISC-S303. Exposed surfaces shall be kept clean and free from sealant, metal cuttings, excess material from thermal cutting, and other foreign materials. Exposed surfaces which have been thermally cut shall be finished smooth within a tolerance of 3.2 mm. Stained, discolored or damaged sheets shall be removed from the site. Welding of steel shall conform to AWS D1.1; welding of aluminum shall

conform to AA SAS-30. High-strength bolting shall conform to AISC-S329 using ASTM A 325or ASTM A 490 bolts. Concrete work is specified in Section 03300 CONCRETE FOR BUILDING CONSTRUCTION.

3.1.2 Framing and Structural Members

Anchor bolts shall be accurately set by template prior to placing concrete. Uniform bearing under base plates and sill members shall be provided using a nonshrinking grout when necessary. Members shall be accurately spaced to assure proper fitting of covering. Separate leveling plates under column base plates shall not be used. As erection progresses, the work shall be securely fastened to resist the dead load and wind and erection stresses.

3.1.3 Wall Covering and Roof Covering

Wall covering shall be applied with the longitudinal configurations in the vertical position. Roof covering shall be applied with the longitudinal configurations in the direction of the roof slope. Accessories shall be fastened into framing members, except as otherwise approved. Closure strips shall be provided as indicated and where necessary to provide weathertight construction.

3.1.3.2 Concealed Fastener Wall Panels

Panels shall be fastened to framing members with concealed fastening clips or other concealed devices standard with the manufacturer. Spacing of fastening clips and fasteners shall be in accordance with the manufacturer's written instructions insofar as the maximum fastener spacings specified are not exceeded and provided such standard practice will result in a structure which will be free from water leaks and meet design requirements. Spacing of fasteners and anchor clips along the panel interlocking ribs shall not exceed 300 mm on center except when otherwise approved. Fasteners shall not puncture covering sheets except as approved for flashing, closures, and trim; exposed fasteners shall be installed in straight lines. Interlocking ribs shall be sealed according to manufacturer's recommendations. Joints at accessories shall be sealed.

3.1.4 Gutters and Downspouts

Gutters and downspouts shall be rigidly attached to the building. Spacing of cleats for gutters shall be 400 mm maximum. Spacing of brackets and spacers for gutters shall be 1 m maximum. Supports for downspouts shall be spaced according to manufacturer's recommendations.

3.1.5 Louvers and Ventilators

Louvers and ventilators shall be rigidly attached to the supporting construction and sealedin a manner as per shop and contract drawingsto assure a rain-tight installation.

3.1.6 Doors and Windows

Doors and windows, including frames and hardware, shall be securely anchored to the supporting construction, shall be installed plumb and true, and shall be adjusted as necessary to provide proper operation. Joints at doors and windows shall be sealed according to manufacturer's recommendations to provide weathertight construction.

3.2 FIELD PAINTING

Immediately upon detection, abraded or corroded spots on shop-painted surfaces shall be wire brushed and touched up with the same material used for the shop coat. Shop-primed ferrous surfaces exposed on the outside of the building and all shop-primed surfaces of doors and windows shall be painted with two coats of an approved exterior enamelin accordance with SECTION 09900 PAINTING, GENERAL. Factory color finished surfaces shall be touched up as necessary with the manufacturer's recommended touch-up paint.

-- End of Section --

SECTION TABLE OF CONTENTS

DIVISION 15 - MECHANICAL

SECTION 15250

THERMAL INSULATION FOR MECHANICAL SYSTEMS

PART 1 GENERAL

1.1 REFERENCES
1.2 SYSTEM DESCRIPTION
1.3 GENERAL QUALITY CONTROL
1.3.1 Standard Products
1.3.2 Installer's Qualifications
1.3.3 Surface Burning Characteristics
1.3.4 Identification of Materials
1.4 SUBMITTALS
1.5 STORAGE

PART 2 PRODUCTS

2.1 GENERAL MATERIALS
2.1.1 Adhesives
2.1.1.1 Mineral Fiber Insulation Cement
2.1.1.2 Lagging Adhesive
2.1.2 Contact Adhesive
2.1.3 Caulking
2.1.4 Corner Angles
2.1.5 Finishing Cement
2.1.6 Fibrous Glass Cloth and Glass Tape
2.1.7 Staples
2.1.8 Jackets
2.1.8.1 White Vapor Retarder ASJ (All Service Jacket)
2.1.8.2 Aluminum Jackets
2.1.8.3 Polyvinyl Chloride (PVC) Jackets
2.1.9 Vapor Retarder Coating
2.1.10 Wire
2.2 PIPE INSULATION MATERIALS
2.2.1 Aboveground Cold Pipeline
2.2.1.1 Cellular Glass
2.2.1.2 Flexible Cellular Insulation
2.2.1.3 Phenolic Insulation
2.2.2 Aboveground Hot Pipeline
2.2.2.1 Mineral Fiber
2.2.2.2 Cellular Glass
2.2.2.3 Flexible Cellular Insulation
2.2.2.4 Phenolic Insulation
2.3 DUCT INSULATION MATERIALS
2.3.1 Rigid Mineral Fiber
2.3.2 Flexible Mineral Fiber
2.3.3 Cellular Glass
2.3.4 Phenolic Foam
2.3.5 Flexible Cellular

PART 3 EXECUTION

3.1 APPLICATION - GENERAL
3.1.1 Installation
3.1.2 Fire stopping
3.1.3 Painting and Finishing
3.1.4 Flexible Cellular Insulation
3.1.5 Welding
3.1.6 Pipes/Ducts/Equipment which Require Insulation
3.2 PIPE INSULATION INSTALLATION
3.2.1 Pipe Insulation
3.2.1.1 General
3.2.1.2 Pipes Passing Through Sleeves
3.2.1.3 Pipes Passing Through Hangers
3.2.1.4 Pipes Passing Through Walls
3.2.1.5 Flexible Cellular Pipe Insulation
3.2.2 Aboveground Cold Pipelines
3.2.2.1 Insulation Thickness
3.2.2.2 Jacket for Fibrous, Cellular Glass, and Phenolic Foam Insulated Pipe
3.2.2.3 Insulation for Straight Runs (Fibrous, Cellular Glass and Phenolic Foam)
3.2.2.4 Insulation for Fittings and Accessories
3.2.2.5 Optional PVC Fitting Covers
3.2.3 Aboveground Hot Pipelines
3.2.3.1 Insulation Thickness
3.2.3.2 Jacket for Insulated Pipe
3.2.3.3 Insulation for Straight Runs
3.2.3.4 Insulation for Fittings and Accessories
3.3 DUCT INSULATION INSTALLATION
3.3.1 Duct Insulation Thickness
3.3.2 Insulation and Vapor Retarder for Cold Air Duct
3.3.3.1 Installation on Concealed Duct
3.3.4 Ducts Handling Air for Dual Purpose
3.3.5 Duct Test Holes

-- End of Section Table of Contents --

SECTION 15250
THERMAL INSULATION FOR MECHANICAL SYSTEMS

PART 1 GENERAL

1.1 REFERENCES

The publications listed below form a part of this specification to the extent referenced. The publications are referred to in the text by basic designation only. At the discretion of the government, the manufacturer of any material supplied will be required to furnish test reports pertaining to any of the tests necessary to assure compliance with the standard or standards referenced in this specification.

AMERICAN SOCIETY FOR TESTING AND MATERIALS (ASTM)

ASTM A 167	(1996) Stainless and Heat-Resisting Chromium-Nickel Steel Plate, Sheet, and Strip
ASTM A 580	(1995a) Stainless and Heat-Resisting Steel Wire
ASTM B 209	(1996) Aluminum and Aluminum-Alloy Sheet and Plate
ASTM C 195	(1990) Mineral Fiber Thermal Insulating Cement
ASTM C 449	(1995) Mineral Fiber Hydraulic-Setting Thermal Insulating and Finishing Cement
ASTM C 534	(1994) Preformed Flexible Elastomeric Cellular Thermal Insulation in Sheet and Tubular Form
ASTM C 547	(1995) Mineral Fiber Pipe Insulation
ASTM C 552	(1991) Cellular Glass Thermal Insulation
ASTM C 553	(1992) Mineral Fiber Blanket Thermal Insulation for Commercial and Industrial Applications
ASTM C 612	(1993) Mineral Fiber Block and Board Thermal Insulation
ASTM C 647	(1995) Properties and Tests of Mastics and Coating Finishes for Thermal Insulation
ASTM C 795	(1992) Thermal Insulation for Use in Contact With Austenitic Stainless Steel
ASTM C 871	(1995) Test Methods for Chemical Analysis of Thermal Insulation Materials for

	Leachable Chloride, Fluoride, Silicate, and Sodium Ions
ASTM C 920	(1994) Elastomeric Joint Sealants
ASTM C 921	(1989 R; 1996) Determining the Properties of Jacketing Materials for Thermal Insulation
ASTM C 1126	(1989; R 1994) Specification for faced or Unfaced Rigid Cellular Phenolic Thermal Insulation
ASTM D 3278	(1989) Test Methods for Flash Point of Liquids by Setaflash Closed-Cup Apparatus
ASTM E 84	(1996a) Surface Burning Characteristics of Building Materials
ASTM E 96	(1995) Water Vapor Transmission of Materials

MANUFACTURERS STANDARDIZATION SOCIETY OF THE VALVE AND FITTINGS INDUSTRY (MSS)

MSS SP-69	(1996) Pipe Hangers and Supports - Selection and Application

MIDWEST INSULATION CONTRACTORS ASSOCIATION (MICA)

MICA-01	(1993) National Commercial & Industrial Insulation Standards

1.2 SYSTEM DESCRIPTION

Field-applied insulation and accessories on mechanical systems shall be as specified herein; factory-applied insulation is specified under the piping, duct or equipment to be insulated. Field applied insulation materials required for use on Government-furnished items as listed in the SPECIAL CONTRACT REQUIREMENTS shall be furnished and installed by the Contractor.

1.3 GENERAL QUALITY CONTROL

1.3.1 Standard Products

Materials shall be the standard products of manufacturers regularly engaged in the manufacture of such products and shall essentially duplicate items that have been in satisfactory use for at least 2 years prior to bid opening.

1.3.2 Installer's Qualifications

Qualified installers shall have successfully completed three or more similar type jobs within the last 5 years.

1.3.3 Surface Burning Characteristics

Unless otherwise specified, insulation not covered with a jacket shall have a flame spread rating no higher than 75 and a smoke developed rating no

higher than 150. The outside surface of insulation systems which are located in air plenums, in ceiling spaces, and in attic spaces shall have a flame spread rating no higher than 25 and a smoke developed rating no higher than 50. Insulation materials located exterior to the building perimeter are not required to be fire-rated. Flame spread and smoke developed ratings shall be determined by ASTM E 84. Insulation shall be tested in the same density and installed thickness as the material that shall be used in the actual construction. Jackets shall comply with the flame spread and smoke developed ratings of 25/50 as determined by ASTM E 84.

1.3.4 Identification of Materials

Packages or standard containers of insulation, jacket material, cements, adhesives, and coatings delivered for use, and samples required for approval shall have manufacturer's stamp or label attached giving the name of the manufacturer and brand, and a description of the material.

1.4 SUBMITTALS

Government approval is required for submittals with a "GA" designation; submittals having an "FIO" designation are for information only. The following shall be submitted in accordance with Section 01330 SUBMITTAL PROCEDURES:

SD-14 Samples

Thermal Insulation Materials; FIO.

A complete list of materials, including manufacturer's descriptive technical literature, performance data, catalog cuts, and installation instructions. The product number, k-value, thickness and furnished accessories for each mechanical system requiring insulation shall be included. Materials furnished under this section of the specification shall be submitted at one time.

After approval of materials and prior to applying insulation a booklet shall be prepared and submitted for approval. The booklet shall contain marked-up MICA-01 plates (or detail drawings showing the insulation material and insulating system) for each pipe, duct, or piece of equipment which is/are required to be insulated per this specification. The MICA plates shall be marked-up showing the materials to be installed in accordance with the requirements of this specification for the specific insulation application. The Contractor shall submit all MICA Plates required to show the entire insulating system, including Plates required to show insulation penetrations, vessel bottom and top heads, legs, and skirt insulation as applicable. If the Contractor elects to submit detailed drawings instead of marked-up MICA Plates, the detail drawings shall show cut-away, section views, and details indicating each component of the insulation system and showing provisions for insulating jacketing, and sealing portions of the equipment. For each type of insulation installation on the drawings, provide a label which identifies each component in the installation (i.e., the duct, insulation, adhesive, vapor retarder, jacketing, tape, mechanical fasteners, etc.) Indicate insulation by type and manufacturer. Three copies of the booklet shall be submitted at the jobsite to the Contracting Officer. One copy of the approved booklet shall remain with the insulation Contractor's display sample and two copies shall be provided for Government use.

After approval of materials actual sections of installed systems properly

insulated in accordance with the specification requirements shall be displayed. Such actual sections must remain accessible to inspection throughout the job and will be reviewed from time to time for controlling the quality of the work throughout the construction site. Each material used shall be identified, by indicating on an attached sheet the specification requirement for the material and the material by each manufacturer intended to meet the requirement. Display sample sections will be inspected at the jobsite by the Contracting Officer. Approved display sample sections shall remain on display at the jobsite during the construction period. Upon completion of construction, the display sample sections will be closed and sealed.

Pipe Insulation Display Sections: Display sample sections shall include as a minimum an elbow or tee, a valve, dielectric unions and flanges, a hanger with protection shield and insulation insert, or dowel as required, at support point, method of fastening and sealing insulation at longitudinal lap, circumferential lap, butt joints at fittings and on pipe runs, and terminating points for each type of pipe insulation used on the job, and for hot pipelines and cold pipelines, both interior and exterior, even when the same type of insulation is used for these services.

Duct Insulation Display Sections: Display sample sections for rigid and flexible duct insulation used on the job. A display section for duct insulation exposed to weather shall be protected by enclosing with a temporary covering.

1.5 STORAGE

Materials shall be delivered in the manufacturer's unopened containers. Materials delivered and placed in storage shall be provided with protection from weather, humidity, dirt, dust and other contaminants by the Contractor. Insulation material and supplies that become dirty, dusty, wet, or otherwise contaminated may be rejected by the Contracting Officer.

PART 2 PRODUCTS

2.1 GENERAL MATERIALS

Materials shall be compatible and shall not contribute to corrosion, soften, or otherwise attack surfaces to which applied in either the wet or dry state. Materials to be used on stainless steel surfaces shall meet ASTM C 795 requirements. Materials shall be asbestos free and conform to the following:

2.1.1 Adhesives

2.1.1.1 Mineral Fiber Insulation Cement

Cement shall be in accordance with ASTM C 195.

2.1.1.2 Lagging Adhesive

Lagging adhesives shall be nonflammable and fire-resistant and shall have flame spread and smoke developed ratings of 25/50 when measured in accordance with ASTM E 84. Adhesives shall be either the Class 1 or Class 2 type as defined here. Class 1 adhesive shall be pigmented white] red] and be suitable for bonding fibrous glass cloth to faced and unfaced fibrous glass insulation board; for bonding cotton brattice cloth to faced and unfaced fibrous glass insulation board; for sealing edges of and

bounding fibrous glass tape to joints of fibrous glass board; or for bonding lagging cloth to thermal insulation. Class 2 adhesive shall be pigmented white and be suitable for attaching fibrous glass insulation to metal surfaces. Lagging adhesives shall be applied in strict accordance with the manufacturer's recommendations.

2.1.2 Contact Adhesive

Adhesive may be dispersed in a nonhalogenated organic solvent with a low flash point (flash point less than minus 3.9 degrees C when tested in accordance with ASTM D 3278) or, dispersed in a nonflammable organic solvent which shall not have a fire point below 94 degrees C. The adhesive shall not adversely affect, initially or in service, the insulation to which it is applied, nor shall it cause any corrosive effect on metal to which it is applied. Any solvent dispersing medium or volatile component of the adhesive shall have no objectionable odor and shall not contain any benzene or carbon tetrachloride. The dried adhesive shall not omit nauseous, irritating, or toxic volatile matters or aerosols when the adhesive is heated to any temperature up to 100 degrees C. The adhesive shall be nonflammable and fire resistant.

2.1.3 Caulking

ASTM C 920, Type S, Grade NS, Class 25, Use A.

2.1.4 Corner Angles

Nominal 0.4060 mm (0.016 inch) aluminum 25 x 25 mm (1 x 1 inch) with factory applied kraft backing. Aluminum shall be ASTM B 209, Alloy 3003, 3105, or 5005.

2.1.5 Finishing Cement

Mineral fiber hydraulic-setting thermal insulating cement ASTM C 449.

2.1.6 Fibrous Glass Cloth and Glass Tape

Fibrous glass cloth and glass tape shall have flame spread and smoke developed ratings of no greater than 25/50 when measured in accordance with ASTM E 84. Fibrous glass cloth and tape; 20 x 20 maximum size mesh. Tape shall be 100 mm wide rolls. Class 3 tape shall be 0.15 kg per square meter.

2.1.7 Staples

Outward clinching type monel] ASTM A 167, Type 304 or 316 stainless steel].

2.1.8 Jackets

ASTM C 921, Type I, maximum moisture vapor transmission 0.02 perms, minimum puncture resistance 50 Beach units on all surfaces except concealed ductwork, where a minimum puncture resistance of 25 Beach units is acceptable. Minimum tensile strength, 6.1 N/mm (35 pounds/inch) width. ASTM C 921, Type II, minimum puncture resistance 25 Beach units, tensile strength minimum 3.5 N/mm (20 pound/inch) width. Jackets used on insulation exposed in finished areas shall have white finish suitable for painting without sizing.

2.1.8.1 White Vapor Retarder ASJ (All Service Jacket)

For use on hot/cold pipes, ducts, or equipment. Vapor retarder jackets used on insulation exposed in finished areas shall have white finish suitable for painting without sizing.

2.1.8.2 Aluminum Jackets

Aluminum jackets shall be corrugated, embossed or smooth sheet, 0.4060 mm (0.016 inch) nominal thickness; ASTM B 209, Temper H14, Temper H16, Alloy 3003, 5005, or 3105 with factory applied moisture retarder. Corrugated aluminum jacket shall not be used outdoors. Aluminum jacket securing bands shall be Type 304 stainless steel, 0.3960 mm (0.015 inch) thick, 12.7 mm (1/2 inch) wide for pipe under 300 mm (12 inch) diameter and 19.1 mm (3/4 inch) wide for pipe over 300 mm (12 inch) diameter. Aluminum jacket circumferential seam bands shall be 50.8 x 0.4060 mm (2 x 0.016 inch) aluminum matching jacket material. Bands for insulation below ground shall be 19.1 x 0.5080 mm (3/4 x 0.020 inch) thick stainless steel, or fiberglass reinforced tape. The jacket may, at the option of the Contractor, be provided with a factory fabricated Pittsburg or "Z" type longitudinal joint. When the "Z" joint is used, the bands at the circumferential joints shall be designed by the manufacturer to seal the joints and hold the jacket in place.

2.1.8.3 Polyvinyl Chloride (PVC) Jackets

Polyvinyl chloride (PVC) jacket and fitting covers shall have high impact strength, UV resistant rating or treatment and moderate chemical resistance with minimum thickness 0.7620 mm (0.030 inch). Insulation under PVC jacket shall meet jacket manufacturer's written recommendations.

2.1.9 Vapor Retarder Coating

The vapor retarder coating shall be fire and water resistant and appropriately selected for either outdoor or indoor service. Color shall be white. The water vapor permeance of the compound shall not exceed 0.05 perm and shall be determined according to procedure B of ASTM E 96utilizing apparatus described in ASTM E 96. The coating shall be a nonflammable, fire resistant type. The flash point of the compound shall not be less than 26.7 degrees C and shall be determined in accordance with ASTM D 3278. All other application and service properties shall be in accordance with ASTM C 647.

2.1.10 Wire

Soft annealed ASTM A 580 Type 302, 304 or 316 stainless steel, 16 or 18 gauge.

2.2 PIPE INSULATION MATERIALS

Pipe insulation materials shall be as follows:

2.2.1 Aboveground Cold Pipeline

Insulation for minus 34 degrees C to plus 16 degrees C shall be as follows:

2.2.1.1 Cellular Glass

ASTM C 552, Type II, and Type III.

2.2.1.2 Flexible Cellular Insulation

ASTM C 534, Type I or II. Type II shall have vapor retarder skin on both sides of the insulation.

2.2.1.3 Phenolic Insulation

ASTM C 1126, Type III. A maximum allowable leachable chloride content shall comply with ASTM C 795 when tested in accordance with ASTM C 871.

2.2.2 Aboveground Hot Pipeline

For aboveground hot pipeline above 16 degrees C insulation the following requirements shall be met.

2.2.2.1 Mineral Fiber

ASTM C 547, Class 1 or Class 2 as required for the operating temperature range.

2.2.2.2 Cellular Glass

ASTM C 552, Type II and Type III.

2.2.2.3 Flexible Cellular Insulation

ASTM C 534, Type I or II to 93 degrees C (200 degrees F) service.

2.2.2.4 Phenolic Insulation

ASTM C 1126 Type III to 121 C service. A maximum allowable leachable chloride content shall comply with ASTM C 795 when tested in accordance with ASTM C 871.

2.3 DUCT INSULATION MATERIALS

Duct insulation materials shall be as follows:

2.3.1 Rigid Mineral Fiber

ASTM C 612, Class 1.

2.3.2 Flexible Mineral Fiber

ASTM C 553, Type I, Class B-2.

2.3.3 Cellular Glass

ASTM C 552, Type I.

2.3.4 Phenolic Foam

ASTM C 1126 Type II. A maximum allowable leachable chloride content shall comply with ASTM C 795 when tested in accordance with ASTM C 871.

2.3.5 Flexible Cellular

ASTM C 534 Type II.

PART 3 EXECUTION

3.1 APPLICATION - GENERAL

3.1.1 Installation

Except as otherwise specified, material shall be installed in accordance with the manufacturer's written instructions. Insulation materials shall not be applied until tests specified in other sections of this specification are completed. Material such as rust, scale, dirt and moisture shall be removed from surfaces to receive insulation. Insulation shall be kept clean and dry. Insulation shall not be removed from its shipping containers until the day it is ready to use and shall be returned to like containers or equally protected from dirt and moisture at the end of each workday. Insulation that becomes dirty shall be thoroughly cleaned prior to use. If insulation becomes wet or if aforementioned cleaning does not restore the surfaces to like new condition, the insulation will be rejected, and shall be immediately removed from the jobsite. Joints shall be staggered on multi layer insulation. Mineral fiber thermal insulating cement shall be mixed with demineralized water when used on stainless steel surfaces. Insulation, jacketing and accessories shall be installed in accordance with MICA-01 standard plates except where modified herein or on the drawings.

3.1.2 Fire stopping

Where pipes and ducts pass through fire walls, fire partitions, above grade floors, and fire rated chase walls, the penetration shall be sealed with Fire stopping materials as specified in Section 07270 FIRE STOPPING.

3.1.3 Painting and Finishing

Painting shall be as specified in Section 09900 PAINTING, GENERAL.

3.1.4 Flexible Cellular Insulation

Flexible cellular insulation shall be installed with seams and joints sealed with a contact adhesive. Flexible cellular insulation shall not be used on surfaces greater than 93 degrees C (200 degrees F). Seams shall be staggered when applying multiple layers of insulation. Insulation exposed to weather and not shown to have jacketing shall be protected with two coats of UV resistant finish as recommended by the manufacturer after the adhesive is dry.

3.1.5 Welding

No welding shall be done on piping, duct or equipment without written approval of the Contracting Officer. The capacitor discharge welding process may be used for securing metal fasteners to duct.

3.1.6 Pipes/Ducts/Equipment which Require Insulation

Insulation is required, unless stated otherwise, on all pipes, ducts, or equipment, which operate at or below 15.6 C and at or above 26.7 C.

3.2 PIPE INSULATION INSTALLATION

3.2.1 Pipe Insulation

3.2.1.1 General

Pipe insulation shall be installed on aboveground hot and cold pipeline systems as specified below to form a continuous thermal retarder, including straight runs, fittings and appurtenances unless specified otherwise. Installation shall be with full length units of insulation and using a single cut piece to complete a run. Cut pieces or scraps abutting each other shall not be used. Pipe insulation shall be omitted on the following:

b. Chromium plated pipe to plumbing fixtures. However, fixtures for use by the physically handicapped shall have the hot water supply and drain, including the trap, insulated where exposed.

c. Sanitary drain lines.

d. Unions in pipe above 16 degrees C.

e. Strainers in pipe above 16 degrees C.

f. Check valves in pipe above 16 degrees C.

3.2.1.2 Pipes Passing Through Sleeves

a. Pipe insulation shall be continuous through the sleeve.

b. An aluminum jacket with factory applied moisture retarder shall be provided over the insulation wherever penetrations require sealing.

c. Where penetrating interior walls, the aluminum jacket shall extend 50 mm beyond either side of the wall and shall be secured on each end with a band.

d. Where penetrating floors, the aluminum jacket shall extend from a point below the backup material to a point 250 mm above the floor with one band at the floor and one not more than 25 mm from the end of the aluminum jacket.

e. Where penetrating waterproofed floors, the aluminum jacket shall extend from below the backup material to a point 50 mm above the flashing with a band 25 mm from the end of the aluminum jacket.

f. Where penetrating exterior walls, the aluminum jacket required for pipe exposed to weather shall continue through the sleeve to a point 50 mm beyond the interior surface of the wall.

g. Where penetrating roofs, pipe shall be insulated as required for interior service to a point flush with the top of the flashing and sealed with vapor retarder coating. The insulations for exterior application shall butt tightly to the top of flashing and interior insulation. The exterior aluminum jacket shall extend 50 mm down beyond the end of the insulation to form a counter flashing. The flashing and counter flashing shall be sealed underneath with caulking.

h. In high abuse areas such as janitor closets and traffic areas in equipment rooms, and mechanical rooms, aluminum jackets shall be utilized. Pipe insulation to the 1.5 m level shall be protected.

3.2.1.3 Pipes Passing Through Hangers

a. Insulation, whether hot or cold application, shall be continuous through hangers. All horizontal pipes 50 mm (2 inches) and smaller shall be supported on hangers with the addition of a Type 40 protection shield to protect the insulation in accordance with MSS SP-69. Whenever insulation shows signs of being compressed, or when the insulation or jacket shows visible signs of distortion at or near the support shield, insulation inserts as specified below for piping larger than 50 mm (2 inches) shall be installed.

b. Horizontal pipes larger than 50 mm (2 inches) at 16 degrees C (60 degrees F) and above shall be supported on hangers in accordance with MSS SP-69, and Section 15400 PLUMBING, GENERAL PURPOSE.

c. Horizontal pipes larger than 50 mm (2 inches) below 16 degrees C shall be supported on hangers with the addition of a Type 40 protection shield in accordance with MSS SP-69. An insulation insert of cellular glass or calcium silicate shall be installed above each shield. The insert shall cover not less than the bottom 180 degree arc of the pipe. Inserts shall be the same thickness as the insulation, and shall extend 50 mm on each end beyond the protection shield. When insulation inserts are required per the above, and the insulation thickness is less than 25 mm (1 inch), wooden or cork dowels or blocks may be installed between the pipe and the shield to prevent the weight of the pipe from crushing the insulation as an option to installing insulation inserts. The insulation jacket shall be continuous over the wooden dowel, wooden block, or insulation insert.

e. Inserts shall be covered with a jacket material of the same appearance and quality as the adjoining pipe insulation jacket, shall overlap the adjoining pipe jacket 38 mm, and shall be sealed as required for the pipe jacket. The jacket material used to cover inserts in flexible cellular insulation shall conform to ASTM C 921, Type 1, and is allowed to be of a different material than the adjoining insulation material.

3.2.1.4 Pipes Passing Through Walls

a. For hot water pipes supplying lavatories or other similar heated service which requires insulation, the insulation shall be terminated on the backside of the finished wall. The insulation termination shall be protected with two coats of vapor barrier coating with a minimum total thickness of 2.0 mm applied with glass tape embedded between coats (if applicable). The coating shall extend out onto the insulation 51.0 mm and shall seal the end of the insulation. Glass tape seams shall overlap 25 mm. Caulk the annular space between the pipe and wall penetration. Cover the pipe and wall penetration with a properly sized (well fitting) escutcheon plate. The escutcheon plate shall overlap the wall penetration at least 10 mm.

b. For domestic cold water pipes requiring insulation, the insulation shall be terminated on the finished side of the wall (i.e. insulation must cover the pipe throughout the wall penetration). The insulation shall be protected with two coats of vapor barrier

coating with a minimum total thickness of 2.0 mm. The coating shall extend out onto the insulation 51.0 mm and shall seal the end of the insulation. Caulk the annular space between the pipe and wall penetration. Cover the pipe and wall penetration with a properly sized (well fitting) escutcheon plate. The escutcheon plate shall overlap the wall penetration by at least 10 mm.

3.2.1.5 Flexible Cellular Pipe Insulation

Flexible cellular pipe insulation shall be tubular form for pipe sizes 150 mm (6 inches) and less. Type II sheet insulation used on pipes larger than 150 mm (6 inches) shall not be stretched around the pipe. On pipes larger than 300 mm (12 inches), adhere insulation directly to the pipe on the lower 1/3 of the pipe. Seams shall be staggered when applying multiple layers of insulation. Sweat fittings shall be insulated with miter-cut pieces the same size as on adjacent piping. Screwed fittings shall be insulated with sleeved fitting covers fabricated from miter-cut pieces and shall be overlapped and sealed to the adjacent pipe insulation.

3.2.2 Aboveground Cold Pipelines

The following shall be included for aboveground cold pipelines minus 34 degrees C to plus 16 degrees C:

a. Domestic cold and chilled drinking water.

b. Refrigerant suction lines.

c. Air conditioner condensate drains.

3.2.2.1 Insulation Thickness

Insulation thickness for cold pipelines shall be determined using Table I.

Table I - Cold Piping Insulation Thickness
Pipe Size (mm)

Type of Service	Material	Runouts up to 51 mm*	25 mm & less	32 - 51 mm	64 - 102 mm	127 - 152 mm	203 mm & larger
Refrigerant suction piping	CG		38	38	38	38	38
	FC		25	25	25	25	25
	PF		25	25	25	25	25
Cold domestic water, above and below ceilings]	CG	38	38	38	38	38	38
	FC	10	10	10	10	10	10
	PF	10	10	10	10	10	10
Exposed lavatory drains exposed domestic water piping & drains to areas for handicap personnel]	FC	13	13	13	13	19	19
	MF	13	25	25	38	38	38
Air conditioning condensate drain located inside building]	FC		10	13	13	N/A	N/A
	PF		10	10	10	N/A	N/A

*When runouts to terminal units exceed 3.66 m the entire length of runout shall be insulated like the main feed pipe.

LEGEND:

PF - Phenolic Foam
CG - Cellular Glass

MF - Mineral Fiber
FC - Flexible Cellular

3.2.2.2 Jacket for Fibrous, Cellular Glass, and Phenolic Foam Insulated Pipe

Insulation shall be covered with a factory applied vapor retarder jacket or field applied seal welded PVC jacket. In high abuse areas such as janitor closets and traffic areas in equipment rooms, and mechanical rooms, aluminum jackets shall be utilized. Pipe insulation to the 1.5 m level will be protected.

3.2.2.3 Insulation for Straight Runs (Fibrous, Cellular Glass and Phenolic Foam)

a. Insulation shall be applied to the pipe with joints tightly butted. The ends of fibrous insulation shall be sealed off with vapor retarder coating at intervals not to exceed 4.5 m.

b. Longitudinal laps of the jacket material shall overlap not less than 38 mm. Butt strips 75 mm (3 inches) wide shall be provided for circumferential joints.

c. Laps and butt strips shall be secured with adhesive and stapled on 100 mm centers if not factory self-sealing.

d. Factory self-sealing lap systems may be used when the ambient temperature is between 4 degrees C (40 degrees F) and 50 degrees C (120 degrees F) during installation. The lap system shall be installed in accordance with manufacturer's recommendations. Stapler shall be used only if specifically recommended by the manufacturer. Where gaps occur, the section shall be replaced or the gap repaired by applying adhesive under the lap and then stapling.

e. All Staples, including those used to repair factory self-seal lap systems, shall be coated with a vapor retarder coating. All seams, except those on factory self-seal systems shall be coated with vapor retarder coating.

f. Breaks and punctures in the jacket material shall be patched by wrapping a strip of jacket material around the pipe and securing it with adhesive, stapling, and coating with vapor retarder coating. The patch shall extend not less than 38 mm past the break.

g. At penetrations such as thermometers, the voids in the insulation shall be filled and sealed with vapor retarder coating.

3.2.2.4 Insulation for Fittings and Accessories

a. Pipe insulation shall have ends thoroughly coated with a vapor retarder coating not less than 150 mm from each flange, union, valve, anchor, or fitting in all directions.

b. Precut, preformed insulation for placement over fittings, flanges, unions, valves, anchors, and mechanical couplings shall be used. Precut, preformed insulation shall exhibit the same properties as the adjoining pipe insulation. Where precut/preformed is unavailable, rigid preformed pipe insulation sections may be segmented into the shape required. Insulation of the same thickness and conductivity as the adjoining pipe insulation shall be used. If nesting size insulation is used, the insulation should be overlapped 50 mm or one pipe diameter. Loose fill mineral fiber or insulating cement shall be used to fill the

voids. Elbows insulated using segments shall not have less than 3 segments per elbow.

c. Upon completion of installation of insulation on flanges, unions, valves, anchors, fittings and accessories, terminations and insulation not protected by factory vapor retarder jackets or PVC fitting covers shall be protected with two coats of vapor retarder coating with a minimum total thickness of 2.0 mm, applied with glass tape embedded between coats. Tape seams shall overlap 25 mm. The coating shall extend out onto the adjoining pipe insulation 50 mm.

d. Anchors attached directly to the pipe shall be insulated for a sufficient distance to prevent condensation but not less than 150 mm from the insulation surface.

e. Flexible connections at pumps and other equipment shall be insulated with 15 mm (« inch) flexible cellular insulation, unless otherwise indicated.

f. Insulation shall be marked showing the location of unions, strainers, and check valves.

3.2.2.5 Optional PVC Fitting Covers

At the option of the Contractor, premolded, one or two piece PVC fitting covers may be used in lieu of the vapor retarder and embedded glass tape. Factory premolded insulation segments shall be used under the fitting covers for elbows. Insulation segments shall be the same thickness as adjoining pipe insulation and the insulation shall be protected with one coat of vapor retarder coating under the PVC cover. The covers shall be secured by PVC vapor retarder tape, adhesive, seal-welding or with tacks made for securing PVC covers. Seams in the cover, and tacks and laps to adjoining pipe insulation jacket, shall be sealed with vapor retarder tape to ensure that the assembly has a continuous vapor seal.

3.2.3 Aboveground Hot Pipelines

For hot pipelines above 16 degrees C the following shall be included:

a. Domestic hot water.

3.2.3.1 Insulation Thickness

Insulation thickness for hot pipelines shall be determined using Table II.

LEGEND:

PF - Phenolic Foam
CG - Cellular Glass

MF - Mineral Fiber
FC - Flexible Cellular

Table II - Hot Piping Insulation Thickness
Pipe Size (mm)

Type of Service (degrees C)	Material	Runouts up to 51 mm	25 mm & less	32 - 51 mm	64 - 102 mm	127 - 152 mm	203 mm & larger
Hot domestic	CG	38	38	38	38	38	38
water supply	FC	13	25	25	38	38	38
system	PF	13	25	25	25	25	25
(93.3 C max)	MF	13	25	25	38	38	38
Compressed Air	CG		38	51	51	51	64
discharge	PF		25	25	25	25	38
return	MF		38	38	51	51	64
(93.9-121.1 C)	CS		38	51	64	64	64

*When runouts to terminal units exceed 3.66 m, the entire length of runout shall be insulated like the main feed pipe.

3.2.3.2 Jacket for Insulated Pipe

Insulation shall be covered, in accordance with manufacturer's recommendations, with a factory applied Type II jacket or field applied aluminum where required or seal welded PVC.

3.2.3.3 Insulation for Straight Runs

a. Insulation shall be applied to the pipe with joints tightly butted.

b. Longitudinal laps of the jacket material shall overlap not less than 38 mm, and butt strips 75 mm (3 inches) wide shall be provided for circumferential joints.

c. Laps and butt strips shall be secured with adhesive and stapled on 100 mm centers if not factory self-sealing. Adhesive may be omitted where pipe is concealed.

d. Factory self-sealing lap systems may be used when the ambient temperature is between 4 degrees C and 49 degrees C (40 degrees and 120 degrees F) and shall be installed in accordance with manufacturer's instructions. Laps and butt strips shall be stapled whenever there is nonadhesion of the system. Where gaps occur, the section shall be replaced or the gap repaired by applying adhesive under the lap and then stapling.

e. Breaks and punctures in the jacket material shall be patched by wrapping a strip of jacket material around the pipe and be secured with adhesive and stapled on 100 mm centers if not factory self-sealing. Adhesive may be omitted where pipe is concealed. Patch shall extend not less than 38 mm past the break.

f. Install flexible cellular pipe insulation by slitting tubular sections and applying onto piping or tubing. Alternately, whenever possible, slide unslit sections over the open ends of piping or tubing. All seams and butt joints shall be secured and

sealed with adhesive. When using self seal products only the butt joints shall be secured with adhesive. Insulation shall be pushed on the pipe, never pulled. Stretching of insulation may result in open seams and joints. All edges shall be clean cut. Rough or jagged edges of the insulation shall not be permitted. Proper tools such as sharp knives must be used. Type II sheet insulation when used on pipe larger than 150 mm (6 inches) shall not be stretched around the pipe. On pipes larger than 300 mm (12 inches), adhere sheet insulation directly to the pipe on the lower 1/3 of the pipe.

3.2.3.4 Insulation for Fittings and Accessories

a. The run of the line pipe insulation shall have the ends brought up to the item.

b. Insulation of the same thickness and conductivity as the adjoining pipe insulation, either premolded or segmented, shall be placed around the item abutting the adjoining pipe insulation, or if nesting size insulation is used, overlapping 50 mm or one pipe diameter. Loose fill mineral fiber or insulating cement shall be used to fill the voids. Insulation for elbows less than 80 mm (3 inch) size shall be premolded. Insulation for elbows 80 mm (3 inch) size and larger shall be either premolded or segmented. Elbows insulated using segments shall have not less than 3 segments per elbow. Insulation may be wired or taped on until finish is applied.

c. Upon completion of installation of insulation on flanges, unions, valves, anchors, fittings and accessories, terminations and insulation not protected by factory vapor retarder jackets or PVC fitting covers shall be protected with two coats of Class 1 adhesive applied with glass tape embedded between coats. Tape seams shall overlap 25 mm. Adhesive shall extend onto the adjoining insulation not less than 50 mm. The total dry film thickness shall be not less than 2.0 mm.

d. Insulation terminations shall be tapered to unions at a 45-degree angle.

e. At the option of the Contractor, factory premolded one- or two-piece PVC fitting covers may be used in lieu of the adhesive and embedded glass tape. Factory premolded segments or factory or field cut blanket insert insulation segments shall be used under the cover and shall be the same thickness as adjoining pipe insulation. The covers shall be secured by PVC vapor retarder tape, adhesive, seal-welding or with tacks made for securing PVC covers.

3.3 DUCT INSULATION INSTALLATION

Corner angles shall be installed on external corners of insulation on ductwork in exposed finished spaces before covering with jacket. Duct insulation shall be omitted on exposed supply and return ducts in air conditioned spaces unless otherwise shown. Air conditioned spaces shall be defined as those spaces directly supplied with cooled conditioned air (or provided with a cooling device such as a fan-coil unit) and heated conditioned air (or provided with a heating device such as a unit heater, radiator or convector).

3.3.1 Duct Insulation Thickness

Duct insulation thickness shall be in accordance with Table III.

Table III - Minimum Duct Insulation (mm)

Cold Air Ducts	50
Fresh Air Intake Ducts	38

3.3.2 Insulation and Vapor Retarder for Cold Air Duct

Insulation and vapor retarder for cold air duct below 16 degrees C: Ducts and associated equipment shall be insulated to a thickness which is in accordance with Table III. The following shall be insulated:

a. Supply ducts.

b. Return air ducts.

d. Flexible runouts (field-insulated).

e. Plenums.

f. Duct-mounted coil casings.

g. Coil headers and return bends.

h. Coil casings.

i. Fresh air intake ducts.

j. Filter boxes.

l. Supply fans (field-insulated).

Insulation for rectangular ducts shall be flexible type where concealed, minimum density 12 kg per cubic meter (3/4 pcf) and rigid type where exposed, minimum density 48 kg per cubic meter (3 pcf). Insulation for round/oval ducts shall be flexible type, minimum density 12 kg per cubic meter (3/4 pcf) with a factory Type I jacket; or, a semi rigid board, minimum density 48 kg per cubic meter (3 pcf), formed or fabricated to a tight fit, edges beveled and joints tightly butted and staggered, with a factory applied Type I all service jacket. Insulation for exposed ducts shall be provided with either a white, paintable, factory-applied Type I jacket or a vapor retarder jacket coating finish as specified. Fibrous and cellular glass insulation on concealed duct shall be provided with a factory-applied Type I vapor retarder jacket. The total dry film thickness shall be approximately 2.0 mm. Duct insulation shall be continuous through sleeves and prepared openings except fire wall penetrations. Duct insulation and vapor retarder shall cover the collar, neck, and any uninsulated surfaces of diffusers, registers and grills. Vapor retarder

materials shall be applied to form a complete unbroken vapor seal over the insulation.

3.3.3.1 Installation on Concealed Duct

a. For rectangular, oval and round ducts, insulation shall be attached by applying Class 2 adhesive around the entire perimeter of the duct in 150 mm wide strips on 300 mm centers.

b. For rectangular and oval ducts 600 mm and larger, insulation shall be secured to the bottom of ducts by the use of mechanical fasteners. Fasteners shall be spaced on 450 mm centers and not more than 450 mm from duct corner.

c. For rectangular, oval and round ducts, mechanical fasteners shall be provided on sides of duct risers for all duct sizes. Fasteners shall be spaced on 450 mm centers and not more than 450 mm from duct corners.

d. The insulation shall be impaled on the mechanical fasteners where used and shall be pressed thoroughly into the adhesive. The insulation shall not be compressed to a thickness less than that specified. Insulation shall be carried over standing seams and trapeze-type hangers.

e. Self-locking washers shall be installed where mechanical fasteners are used and the pin trimmed and bent over.

f. Insulation jacket shall overlap not less than 50 mm at joints and the lap shall be secured with Class 2 adhesive under the lap and stapled on 100 mm centers.

3.3.4 Ducts Handling Air for Dual Purpose

For air handling ducts for dual purpose below and above 16 degrees C, ducts shall be insulated as specified for cold air duct.

3.3.5 Duct Test Holes

After duct systems have been tested, adjusted, and balanced, breaks in the insulation and jacket shall be repaired in accordance with the applicable section of this specification for the type of duct insulation to be repaired.

-- End of Section --

SECTION TABLE OF CONTENTS

DIVISION 15 - MECHANICAL

SECTION 15400

PLUMBING, GENERAL PURPOSE

PART 1 GENERAL

1.1 REFERENCES
1.2 STANDARD PRODUCTS
1.3 PERFORMANCE REQUIREMENTS
1.4 ELECTRICAL WORK
1.5 SUBMITTALS
1.6 REGULATORY REQUIREMENTS
1.6.1 Plumbing
1.7 PROJECT/SITE CONDITIONS

PART 2 PRODUCTS

2.1 MATERIALS
2.1.1 Pipe Joint Materials
2.1.2 Miscellaneous Materials
2.1.3 Pipe Insulation Material
2.2 PIPE HANGERS, INSERTS, AND SUPPORTS
2.3 VALVES
2.3.1 Hose Faucets
2.3.2 Relief Valves
2.4 FIXTURES
2.4.1 Lavatories
2.5 DRAINS
2.5.1 Floor Drains
2.6 TRAPS
2.7 WATER HEATER
2.7.1 Electric Type
2.8 COMPRESSED AIR SYSTEM
2.8.1 Air Compressors
2.8.2 Lubricated Compressors
2.8.3 Air Receivers
2.8.4 Intake Air Supply Filter
2.8.5 Pressure Regulators

PART 3 EXECUTION

3.1 GENERAL INSTALLATION REQUIREMENTS
3.1.1 Water Pipe, Fittings, and Connections
3.1.1.1 Utilities
3.1.1.2 Cutting and Repairing
3.1.1.3 Protection of Fixtures, Materials, and Equipment
3.1.1.4 Mains, Branches, and Runouts
3.1.1.5 Pipe Drains
3.1.1.6 Expansion and Contraction of Piping
3.1.2 Compressed Air Piping (Non-Oil Free)

3.1.3 Joints
3.1.3.1 Threaded
3.1.3.2 Mechanical Couplings
3.1.3.3 Union and Flanged
3.1.3.4 Cast Iron Soil, Waste and Vent Pipe
3.1.3.5 Copper Tube and Pipe
3.1.3.6 Plastic Pipe
3.1.4 Dissimilar Pipe Materials
3.1.5 Corrosion Protection for Buried Pipe and Fittings
3.1.5.1 Cast Iron and Ductile Iron
3.1.5.2 Steel
3.1.6 Pipe Sleeves and Flashing
3.1.6.1 Sleeve Requirements
3.1.6.2 Flashing Requirements
3.1.6.3 Waterproofing
3.1.6.4 Optional Counterflashing
3.1.6.5 Pipe Penetrations of Slab on Grade Floors
3.1.7 Fire Seal
3.1.8 Supports
3.1.8.1 General
3.1.8.2 Pipe Supports and Structural Bracing, Seismic Requirements
3.1.8.3 Pipe Hangers, Inserts, and Supports
3.1.9 Pipe Cleanouts
3.2 WATER HEATERS
3.2.1 Relief Valves
3.2.2 Connections to Water Heaters
3.3 FIXTURES AND FIXTURE TRIMMINGS
3.3.1 Fixture Connections
3.3.2 Flushometer Valves
3.3.3 Height of Fixture Rims Above Floor
3.3.4 Fixture Supports
3.3.4.1 Support for Steel Stud Frame Partitions
3.3.5 Access Panels
3.3.6 Traps
3.4 VIBRATION-ABSORBING FEATURES
3.4.1 Tank- Compressors
3.4.2 Foundation-Mounted Compressors
3.5 ESCUTCHEONS
3.6 PAINTING
3.7 TESTS FLUSHING AND STERILIZATION
3.7.1 Plumbing System
3.7.1.1 Compressed Air Piping (Nonoil-Free)
3.7.2 Defective Work
3.7.3 System Flushing
3.7.4 Operational Test
3.7.5 Disinfection
3.8 PLUMBING FIXTURE SCHEDULE
3.9 POSTED INSTRUCTIONS
3.10 PERFORMANCE OF WATER HEATING EQUIPMENT
3.10.1 Storage Water Heaters
3.10.1.1 Electric

-- End of Section Table of Contents --

SECTION 15400

PLUMBING, GENERAL PURPOSE

PART 1 GENERAL

1.1 REFERENCES

The publications listed below form a part of this specification to the extent referenced. The publications are referred to in the text by basic designation only.

AIR CONDITIONING AND REFRIGERATION INSTITUTE (ARI)

ARI 700	(1995) Specifications for Fluorocarbon and Other Refrigerants
ARI 1010	(1994) Self-Contained, Mechanically-Refrigerated Drinking-Water Coolers

AMERICAN NATIONAL STANDARDS INSTITUTE (ANSI)

ANSI Z21.22	(1986; Z21.22a) Relief Valves and Automatic Gas Shutoff Devices for Hot Water Supply Systems

AMERICAN SOCIETY FOR TESTING AND MATERIALS (ASTM)

ASTM A 47	(1990) Ferritic Malleable Iron Castings
ASTM A 53	(1996) Pipe, Steel, Black and Hot-Dipped, Zinc-Coated Welded and Seamless
ASTM A 74	(1996) Cast Iron Soil Pipe and Fittings
ASTM A 105	(1996) Forgings, Carbon Steel, for Piping Components
ASTM A 183	(1983; R 1990) Carbon Steel Track Bolts and Nuts
ASTM A 193	(1996) Alloy-Steel and Stainless Steel Bolting Materials for High-Temperature Service
ASTM A 515	(1992) Pressure Vessel Plates, Carbon Steel, for Intermediate- and Higher-Temperature Service
ASTM A 516	(1990) Pressure Vessel Plates, Carbon Steel, for Moderate- and Lower-Temperature Service
ASTM A 518	(1992) Corrosion-Resistant High-Silicon

	Iron Castings
ASTM A 536	(1984; R 1993) Ductile Iron Castings
ASTM A 733	(1993) Welded and Seamless Carbon Steel and Austenitic Stainless Steel Pipe Nipples
ASTM A 888	(1994) Hubless Cast Iron Soil Pipe and Fittings for Sanitary and Storm Drain, Waste, and Vent Piping Applications
ASTM B 32	(1995b) Solder Metal
ASTM B 42	(1993) Seamless Copper Pipe, Standard Sizes
ASTM B 43	(1994) Seamless Red Brass Pipe, Standard Sizes
ASTM B 75	(1993) Seamless Copper Tube
ASTM B 88	(1996) Seamless Copper Water Tube
ASTM B 152	(1994) Copper Sheet, Strip, Plate, and Rolled Bar
ASTM B 306	(1996) Copper Drainage Tube (DWV)
ASTM B 370	(1992) Copper Sheet and Strip for Building Construction
ASTM B 584	(1996) Copper Alloy Sand Castings for General Applications
ASTM B 641	(1993) Seamless and Welded Copper Distribution Tube (Type D)
ASTM B 813	(1993) Liquid and Paste Fluxes for Soldering Applications of Copper and Copper Alloy Tube
ASTM B 828	(1992) Making Capillary Joints by Soldering of Copper and Copper-Alloy Tube and Fittings
ASTM C 564	(1995) Rubber Gaskets for Cast Iron Soil Pipe and Fittings
ASTM C 920	(1994) Elastomeric Joint Sealants
ASTM C 1053	(1990) Borosilicate Glass Pipe and Fittings for Drain, Waste, and Vent (DWV) Applications
ASTM D 1785	(1994) Poly(Vinyl Chloride) (PVC) Plastic Pipe, Schedules 40, 80, and 120
ASTM D 2000	(1996) Rubber Products in Automotive Applications

ASTM D 2235	(1993a) Solvent Cement for Acrylonitrile-Butadiene-Styrene (ABS) Plastic Pipe and Fittings
ASTM D 2239	(1994) Polyethylene (PE) Plastic Pipe (SIDR-PR) Based on Controlled Inside Diameter
ASTM D 2241	(1994) Poly(Vinyl Chloride) (PVC) Pressure-Rated Pipe (SDR Series)
ASTM D 2447	(1993) Polyethylene (PE) Plastic Pipe, Schedules 40 and 80, Based on Outside Diameter
ASTM D 2464	(1994) Threaded Poly(Vinyl Chloride) (PVC) Plastic Pipe Fittings, Schedule 80
ASTM D 2466	(1994a) Poly(Vinyl Chloride) (PVC) Plastic Pipe Fittings, Schedule 40
ASTM D 2467	(1994) Socket-Type Poly(Vinyl Chloride) (PVC) Plastic Pipe Fittings, Schedule 80
ASTM D 2564	(1993) Solvent Cements for Poly(Vinyl Chloride) (PVC) Plastic Piping Systems
ASTM D 2661	(1995) Acrylonitrile-Butadiene-Styrene (ABS) Schedule 40 Plastic Drain, Waste, and Vent Pipe and Fittings
ASTM D 2665	(1995) Poly(Vinyl Chloride) (PVC) Plastic Drain, Waste, and Vent Pipe and Fittings
ASTM D 2672	(1993; R 1995) Joints for IPS PVC Pipe Using Solvent Cement
ASTM D 2683	(1993) Socket-Type Polyethylene Fittings for Outside Diameter-Controlled Polyethylene Pipe and Tubing
ASTM D 2737	(1993) Polyethylene (PE) Plastic Tubing
ASTM D 2846	(1995a) Chlorinated Poly(Vinyl Chloride) (CPVC) Plastic Hot- and Cold-Water Distribution Systems
ASTM D 2855	(1993) Making Solvent-Cemented Joints with Poly(Vinyl Chloride) (PVC) Pipe and Fittings
ASTM D 2996	(1995) Filament-Wound "Fiberglass" (Glass-Fiber-Reinforced Thermosetting-Resin) Pipe
ASTM D 3035	(1993) Polyethylene (PE) Plastic Pipe (DR-PR) Based on Controlled Outside Diameter

ASTM D 3122	(1993) Solvent Cements for Styrene-Rubber (SR) Plastic Pipe and Fittings
ASTM D 3138	(1993) Solvent Cements for Transition Joints Between Acrylonitrile-Butadiene-Styrene (ABS) and Poly(Vinyl Chloride) (PVC) Non-Pressure Piping Components
ASTM D 3139	(1989; R 1995) Joints for Plastic Pressure Pipes Using Flexible Elastomeric Seals
ASTM D 3212	(1992) Joints for Drain and Sewer Plastic Pipes Using Flexible Elastomeric Seals
ASTM D 3261	(1993) Butt Heat Fusion Polyethylene (PE) Plastic Fittings for Polyethylene (PE) Plastic Pipe and Tubing
ASTM D 3308	(1991a) PTFE Resin Skived Tape
ASTM D 3311	(1994) Drain, Waste, and Vent (DWV) Plastic Fittings Patterns
ASTM D 4101	(1995a) Propylene Plastic Injection and Extrusion Materials
ASTM F 409	(1995) Thermoplastic Accessible and Replaceable Plastic Tube and Tubular Fittings
ASTM F 437	(1993) Threaded Chlorinated Poly(Vinyl Chloride) (CPVC) Plastic Pipe Fittings, Schedule 80
ASTM F 438	(1993) Socket-Type Chlorinated Poly(Vinyl Chloride) (CPVC) Plastic Pipe Fittings, Schedule 40
ASTM F 439	(1993a) Socket-Type Chlorinated Poly(Vinyl Chloride) (CPVC) Plastic Pipe Fittings, Schedule 80
ASTM F 441	(1995) Chlorinated Poly(Vinyl Chloride) (CPVC) Plastic Pipe, Schedules 40 and 80
ASTM F 442	(1994) Chlorinated Poly(Vinyl Chloride) (CPVC) Plastic Pipe (SDR-PR)
ASTM F 477	(1995) Elastomeric Seals (Gaskets) for Joining Plastic Pipe
ASTM F 493	(1993a) Solvent Cements for Chlorinated Poly(Vinyl Chloride) (CPVC) Plastic Pipe and Fittings
ASTM F 628	(1995) Acrylonitrile-Butadiene-Styrene (ABS) Schedule 40 Plastic Drain, Waste, and Vent Pipe with a Cellular Core

ASTM F 891	(1993a) Coextruded Poly(Vinyl Chloride) (PVC) Plastic Pipe with a Cellular Core

AMERICAN SOCIETY OF HEATING, REFRIGERATING AND AIR-CONDITIONING ENGINEERS (ASHRAE)

ASHRAE 34	(1992; Addenda a-j) Number Designation and Safety Classification of Refrigerants
ASHRAE 90.1	(1989; 90.1b; 90.1c; 90.1d; 90.1e; 90.1g; 90.1i) Energy Efficient Design of New Buildings Except Low-Rise Residential Buildings

AMERICAN SOCIETY OF MECHANICAL ENGINEERS (ASME)

ASME A112.6.1M	(1988) Supports for Off-the-Floor Plumbing Fixtures for Public Use
ASME A112.19.2M	(1995; Errata) Vitreous China Plumbing Fixtures
ASME A112.21.1M	(1991) Floor Drains
ASME A112.36.2M	(1991) Cleanouts
ASME B1.20.1	(1983; R 1992) Pipe Threads, General Purpose (Inch)
ASME B16.3	(1992) Malleable Iron Threaded Fittings
ASME B16.4	(1992) Gray Iron Threaded Fittings
ASME B16.5	(1988; Errata Oct 88; B16.5a) Pipe Flanges and Flanged Fittings
ASME B16.12	(1991) Cast Iron Threaded Drainage Fittings
ASME B16.15	(1985; R 1994) Cast Bronze Threaded Fittings Classes 125 and 250
ASME B16.18	(1984; R 1994) Cast Copper Alloy Solder Joint Pressure Fittings
ASME B16.21	(1992) Nonmetallic Flat Gaskets for Pipe Flanges
ASME B16.22	(1995) Wrought Copper and Copper Alloy Solder Joint Pressure Fittings
ASME B16.23	(1992; Errata Jan 1994) Cast Copper Alloy Solder Joint Drainage Fittings - DWV
ASME B16.24	(1991; Errata) Cast Copper Alloy Pipe Flanges, Class 150, 300, 400, 600, 900, 1500 and 2500, and Flanged Fittings, Class 150 and 300

ASME B16.29	(1994) Wrought Copper and Wrought Copper Alloy Solder Joint Drainage Fittings - DWV
ASME B16.39	(1986; R 1994) Malleable Iron Threaded Pipe Unions Classes 150, 250, and 300
ASME B31.5	(1992; B31.5a) Refrigeration Piping
ASME BPV VIII Div 1	(1995; Addenda Dec 1995) Boiler and Pressure Vessel Code; Section VIII, Pressure Vessels Division 1 - Basic Coverage

AMERICAN SOCIETY OF SANITARY ENGINEERING (ASSE)

ASSE 1001	(1990) Pipe Applied Atmospheric Type Vacuum Breakers
ASSE 1037	(1986; Rev thru Mar 1990) Pressurized Flushing Devices (Flushometers) for Plumbing Fixtures/F

AMERICAN WATER WORKS ASSOCIATION (AWWA)

AWWA-01	(1995) Standard Methods for the Examination of Water and Wastewater
AWWA B300	(1992) Hypochlorites
AWWA B301	(1992) Liquid Chlorine
AWWA C105	(1993) Polyethylene Encasement for Ductile-Iron Pipe Systems
AWWA C203	(1991) Coal-Tar Protective Coatings and Linings for Steel Water Pipelines - Enamel and Tape - Hot-Applied
AWWA C606	(1987) Grooved and Shouldered Joints
AWWA M20	(1973) Manual: Water Chlorination Principles and Practices

AMERICAN WELDING SOCIETY (AWS)

AWS A5.8	(1992) Filler Metals for Brazing and Braze Welding
AWS B2.2	(1991) Brazing Procedure and Performance Qualification

CAST IRON SOIL PIPE INSTITUTE (CISPI)

CISPI 301	(1995) Hubless Cast Iron Soil Pipe and Fittings for Sanitary and Storm Drain, Waste, and Vent Piping Applications
CISPI HSN-85	(1985) Neoprene Rubber Gaskets for Hub and Spigot Cast Iron Soil Pipe and Fittings

CODE OF FEDERAL REGULATIONS (CFR)

10 CFR 430	Energy Conservation Program for Consumer Products

COMMERCIAL ITEM DESCRIPTIONS (CID)

CID A-A-238	(Rev B) Seat, Water Closet

COPPER DEVELOPMENT ASSOCIATION (CDA)

CDA-02	(1995) Copper Tube Handbook

MANUFACTURERS STANDARDIZATION SOCIETY OF THE VALVE AND FITTINGS INDUSTRY (MSS)

MSS SP-25	(1993) Standard Marking System for Valves, Fittings, Flanges and Unions
MSS SP-44	(1996) Steel Pipe Line Flanges
MSS SP-58	(1993) Pipe Hangers and Supports - Materials, Design and Manufacture
MSS SP-69	(1996) Pipe Hangers and Supports - Selection and Application
MSS SP-72	(1992) Ball Valves with Flanged or Butt-welding Ends for General Service
MSS SP-73	(1991) Brazing Joints for Copper and Copper Alloy Pressure Fittings
MSS SP-78	(1987; R 1992) Cast Iron Plug Valves, Flanged and Threaded Ends
MSS SP-80	(1997) Bronze Gate, Globe, Angle and Check Valves
MSS SP-83	(1995) Class 3000 Steel Pipe Unions Socket-Welding and Threaded
MSS SP-110	(1996) Ball Valves Threaded, Socket-Welding, Solder Joint, Grooved and Flared Ends

NATIONAL ASSOCIATION OF PLUMBING-HEATING-COOLING CONTRACTORS (NAPHCC)

NAPHCC-01	(1996) National Standard Plumbing Code

NATIONAL ELECTRICAL MANUFACTURERS ASSOCIATION (NEMA)

NEMA 250	(1991) Enclosures for Electrical Equipment

(1000 Volts Maximum)

NATIONAL FIRE PROTECTION ASSOCIATION (NFPA)

NFPA 90A	(1993) Installation of Air Conditioning and Ventilating Systems

NSF INTERNATIONAL (NSF)

NSF Std 14	(1965; Rev Nov 1990) Plastics Piping Components and Related Materials

PLASTIC PIPE AND FITTINGS ASSOCIATION (PPFA)

PPFA-01	(1991) Plastic Pipe in Fire Resistive Construction

UNDERWRITERS LABORATORIES (UL)

UL 174	(1996) Household Electric Storage Tank Water Heaters

1.2 STANDARD PRODUCTS

Specified materials and equipment shall be standard products of a manufacturer regularly engaged in the manufacture of such products. Specified equipment shall essentially duplicate equipment that has performed satisfactorily at least two years prior to bid opening.

1.3 PERFORMANCE REQUIREMENTS

1.4 ELECTRICAL WORK

Motors, motor controllers and motor efficiencies shall conform to the requirements of Section 16415 ELECTRICAL WORK, INTERIOR. Electrical motor-driven equipment specified herein shall be provided complete with motors. Equipment shall be rated at 60 Hz, single phase, ac unless otherwise indicated. Where a motor controller is not provided in a motor-control center on the electrical drawings, a motor controller shall be as indicated. Motor controllers shall be provided complete with properly sized thermal-overload protection in each ungrounded conductor, auxiliary contact, and other equipment, at the specified capacity, and including an allowable service factor.

1.5 SUBMITTALS

Government approval is required for submittals with a "GA" designation; submittals having an "FIO" designation are for information only. The following shall be submitted in accordance with Section 01330 SUBMITTAL PROCEDURES:

SD-01 Data

Welding; FIO.

A copy of qualified procedures and a list of names and identification symbols of qualified welders and welding operators.

Vibration-Absorbing Features; FIO.

Details of vibration-absorbing features, including arrangement, foundation plan, dimensions and specifications.

SD-04 Drawings

Plumbing System; FIO.

Detail drawings consisting of illustrations, schedules, performance charts, instructions, brochures, diagrams,and pipe sizing and other information to illustrate the requirements and operations of each system. Detail drawings for the complete plumbing system including piping layouts and locations of connections; dimensions for roughing-in, foundation, and support points; schematic diagrams and wiring diagrams or connection and interconnection diagrams. Detail drawings shall indicate clearances required for maintenance and operation. Where piping and equipment are to be supported other than as indicated, details shall include loadings and proposed support methods. Mechanical drawing plans, elevations, views, and details, shall be drawn to scale.

Electrical Schematics; FIO.

Complete electrical schematic lineless or full line interconnection and connection diagram for each piece of mechanical equipment having more than one automatic or manual electrical control device.

SD-06 Instructions

Plumbing System; FIO.

Diagrams, instructions, and other sheets proposed for posting. Manufacturer's recommendations for the installation of bell and spigot and hubless joints for cast iron soil pipe.

SD-09 Reports

Tests, Flushing and Sterilization; FIO.

Test reports in booklet form showing all field tests performed to adjust each component and all field tests performed to prove compliance with the specified performance criteria, completion and testing of the installed system. Each test report shall indicate the final position of controls.

SD-13 Certificates

Materials and Equipment; FIO.

Where materials or equipment are specified to comply with requirements of AGA, or ASME, proof of such compliance. The label or listing of the specified agency will be acceptable evidence. In lieu of the label or listing, a written certificate may be submitted from an approved, nationally recognized testing organization equipped to perform such services, stating that the items have been tested and conform to the requirements and testing methods of the specified agency. Where equipment is specified to conform to requirements of the ASME Boiler and Pressure Vessel Code, the design, fabrication, and installation shall conform to the code.

Bolts; FIO.

Written certification by the bolt manufacturer that the bolts furnished comply with the specified requirements. The certification shall include illustrations of product-required markings, the date of manufacture, and the number of each type of bolt to be furnished based on this certification.

SD-19 Operation and Maintenance Manuals

Plumbing System; FIO.

Six _____ copies of the operation manual outlining the step-by-step procedures required for system startup, operation and shutdown. The manual shall include the manufacturer's name, model number, service manual, parts list, and brief description of all equipment and their basic operating features. Six _____ copies of the maintenance manual listing routine maintenance procedures, possible breakdowns and repairs. The manual shall include piping and equipment layout and simplified wiring and control diagrams of the system as installed.

1.6 REGULATORY REQUIREMENTS

1.6.1 Plumbing

Plumbing work shall be in accordance with NAPHCC-01.

1.7 PROJECT/SITE CONDITIONS

The Contractor shall become familiar with details of the work, verify dimensions in the field, and advise the Contracting Officer of any discrepancy before performing any work.

PART 2 PRODUCTS

2.1 MATERIALS

Materials for various services shall be in accordance with TABLES I and II. Pipe schedules shall be selected based on service requirements. Pipe fittings shall be compatible with the applicable pipe materials. Plastic pipe, fittings, and solvent cement shall meet NSF Std 14 and shall be NSF listed for the service intended. Plastic pipe, fittings, and solvent cement used for potable hot and cold water service shall bear the NSF seal "NSF-PW." Polypropylene pipe and fittings shall conform to dimensional requirements of Schedule 40, Iron Pipe size. Pipe threads (except dry seal) shall conform to ASME B1.20.1. Grooved pipe couplings and fittings shall be from the same manufacturer. Material or equipment containing lead shall not be used in any potable water system. Hubless cast-iron soil pipe shall not be installed under concrete floor slabs . Plastic pipe shall not be installed in air plenums. Plastic pipe shall not be installed in a pressure piping system in buildings greater than three stories including any basement levels.

2.1.1 Pipe Joint Materials

Grooved pipe shall not be used under ground. Joints and gasket materials shall conform to the following:

a. Coupling for Cast-Iron Pipe: ASTM A 74, AWWA C606.

b. Coupling for Steel Pipe: AWWA C606.

c. Couplings for Grooved Pipe: Ductile Iron ASTM A 536 (Grade 65-45-12) orMalleable Iron ASTM A 47, Grade 32510.or Copper ASTM A 536.

d. Flange Gaskets: Gaskets shall be made of non-asbestos material in accordance with ASME B16.21. Gaskets shall be flat, 1.6 mm (1/16 inch) thick, and contain Aramid fibers bonded with Styrene Butadiene Rubber (SBR) or Nitro Butadiene Rubber (NBR). Gaskets shall be the full face or self centering flat ring type. Gaskets used for hydrocarbon service shall be bonded with NBR.

e. Neoprene Gaskets for Hub and Cast-Iron Pipe and Fittings: CISPI HSN-85.

f. Brazing Material: Brazing material shall conform to AWS A5.8, BCuP-5.

g. Brazing Flux: Flux shall be in paste or liquid form appropriate for use with brazing material. Flux shall be as follows: lead-free; have a 100 percent flushable residue; contain slightly acidic reagents; contain potassium borides; and contain fluorides. Silver brazing materials shall be in accordance with AWS A5.8.

h. Solder Material: Solder metal shall conform to ASTM B 32 95-5 tin-antimony.

i. Solder Flux: Flux shall be liquid form, non-corrosive, and conform to ASTM B 813, Standard Test 1.

j. PTFE Tape: PTFE Tape, for use with Threaded Metal or Plastic Pipe, ASTM D 3308.

k. Rubber Gaskets for Cast-Iron Soil-Pipe and Fittings: ASTM C 564.

l. Rubber Gaskets for Grooved Pipe: ASTM D 2000, maximum temperature 110 degrees C (230 degrees F).

m. Flexible Elastomeric Seals: ASTM D 3139, ASTM D 3212 or ASTM F 477.

n. Bolts and Nuts for Grooved Pipe Couplings: Heat-treated carbon steel, ASTM A 183.

o. Solvent Cement for Transition Joints between ABS and PVC Nonpressure Piping Components: ASTM D 3138.

p. Plastic Solvent Cement for ABS Plastic Pipe: ASTM D 2235.

q. Plastic Solvent Cement for PVC Plastic Pipe: ASTM D 2564 and ASTM D 2855.

r. Plastic Solvent Cement for CPVC Plastic Pipe: ASTM F 493.

s. Flanged fittings including flanges, bolts, nuts, bolt patterns, etc. shall be in accordance with ASME B16.5 class 150 and shall have the manufacturer's trademark affixed in accordance with MSS SP-25. Flange material shall conform to ASTM A 105. Blind flange

material shall conform to ASTM A 516 cold service and ASTM A 515 for hot service. Bolts shall be high strength or intermediate strength with material conforming to ASTM A 193.

t. Plastic Solvent Cement for Styrene Rubber Plastic Pipe: ASTM D 3122.

2.1.2 Miscellaneous Materials

Miscellaneous materials shall conform to the following:

a. Copper, Sheet and Strip for Building Construction: ASTM B 370.

b. Supports for Off-The-Floor Plumbing Fixtures: ASME A112.6.1M.

c. Metallic Cleanouts: ASME A112.36.2M.

d. Plumbing Fixture Setting Compound: A preformed flexible ring seal molded from hydrocarbon wax material. The seal material shall be nonvolatile nonasphaltic and contain germicide and provide watertight, gastight, odorproof and verminproof properties.

AWWA C203.

i. Hypochlorites: AWWA B300.

j. Liquid Chlorine: AWWA B301.

2.1.3 Pipe Insulation Material

Insulation shall be as specified in Section 15250 THERMAL INSULATION FOR MECHANICAL SYSTEMS.

2.2 PIPE HANGERS, INSERTS, AND SUPPORTS

Pipe hangers, inserts, and supports shall conform to MSS SP-58 and MSS SP-69.

2.3 VALVES

Valves shall be provided on supplies to equipment and fixtures. Valves 65 mm (2-1/2 inches) and smaller shall be bronze with threaded bodies for pipe and solder-type connections for tubing. Valves 80 mm (3 inches) and larger shall have flanged iron bodies and bronze trim. Pressure ratings shall be based upon the application. Grooved end valves may be provided if the manufacturer certifies that the valves meet the performance requirements of applicable MSS standard. Valves shall conform to the following standards:

Description	Standard
Ball Valves with Flanged Butt-Welding Ends for General Service	MSS SP-72
Ball Valves Threaded, Socket-Welding, Solder Joint, Grooved and Flared Ends	MSS SP-110
Cast-Iron Plug Valves, Flanged and Threaded Ends	MSS SP-78
Bronze Gate, Globe, Angle, and Check Valves	MSS SP-80
Vacuum Relief Valves	ASSE 1001
Temperature and Pressure Relief Valves for Hot Water Supply Systems	ANSI Z21.22

2.3.1 Hose Faucets

Wall faucets with vacuum-breaker backflow preventer shall be brass with 20 mm (3/4 inch) male inlet threads, hexagon shoulder, and 20 mm (3/4 inch) hose connection. Faucet handle shall be securely attached to stem.

2.3.2 Relief Valves

Water heaters shall have a combination pressure and temperature (P&T) relief valve. The pressure relief element of a P&T relief valve shall have adequate capacity to prevent excessive pressure buildup in the system when the system is operating at the maximum rate of heat input. The temperature element of a P&T relief valve shall have a relieving capacity which is at least equal to the total input of the heaters when operating at their maximum capacity. Relief valves shall be rated according to ANSI Z21.22. Relief valves for systems where the maximum rate of heat input is less than 59 kW (200,000 Btuh) shall have 20 mm (3/4 inch) minimum inlets, and 20 mm (3/4 inch) outlets. Relief valves for systems where the maximum rate of heat input is greater than 59 kW (200,000 Btuh) shall have 25 mm (1 inch) minimum inlets, and 25 mm (1 inch) outlets. The discharge pipe from the relief valve shall be the size of the valve outlet.

2.4 FIXTURES

Vitreous china, nonabsorbent, hard-burned, and vitrified throughout the body shall be provided. Porcelain enameled ware shall have specially selected, clear white, acid-resisting enamel coating evenly applied on surfaces. No fixture will be accepted that shows cracks, crazes, blisters, thin spots, or other flaws. Fixtures shall be equipped with appurtenances such as traps, faucets, stop valves, and drain fittings. Each fixture and piece of equipment requiring connections to the drainage system, except grease interceptors, shall be equipped with a trap. Brass expansion or toggle bolts capped with acorn nuts shall be provided for supports, and polished chromium-plated pipe, valves, and fittings shall be provided where

exposed to view. Fixtures with the supply discharge below the rim shall be equipped with backflow preventers. Internal parts of flush and/or flushometer valves,may contain acetal resin, fluorocarbon, nylon, acrylonitrile-butadiene-styrene (ABS) or other plastic material, if the material has provided satisfactory service under actual commercial or industrial operating conditions for not less than 2 years. Plastic in contact with hot water shall be suitable for 82 degrees C (180 degrees F) water temperature. Plumbing fixtures shall be as indicated in paragraph PLUMBING FIXTURE SCHEDULE.

2.4.1 Lavatories

Vitreous china lavatories shall be provided with two integral molded lugs on the back-underside of the fixture and drilled for bolting to the wall in a manner similar to the hanger plate.

2.5 DRAINS

2.5.1 Floor Drains

Floor drains shall consist of a galvanized body, integral seepage pan, and adjustable perforated or slotted chromium-plated bronze, nickel-bronze, or nickel-brass strainer, consisting of grate and threaded collar. Floor drains shall be cast iron except where metallic waterproofing membrane is installed. Drains shall be of double drainage pattern for embedding in the floor construction. The seepage pan shall have weep holes or channels for drainage to the drainpipe. The strainer shall be adjustable to floor thickness. A clamping device for attaching flashing or waterproofing membrane to the seepage pan without damaging the flashing or waterproofing membrane shall be provided when required. Drains shall be provided with threaded or caulked connection. In lieu of a caulked joint between the drain outlet and waste pipe, a neoprene rubber gasket conforming to ASTM C 564 may be installed, provided that the drain is specifically designed for the rubber gasket compression type joint. Floor drains shall conform to ASME A112.21.1M.

2.6 TRAPS

Unless otherwise specified, traps shall be plastic per ASTM F 409 or copper-alloy adjustable tube type with slip joint inlet and swivel. Traps shall be without a cleanout. Tubes shall be copper alloy with walls not less than 0.813 mm (0.032 inch) thick within commercial tolerances, except on the outside of bends where the thickness may be reduced slightly in manufacture by usual commercial methods. Inlets shall have rubber washer and copper alloy nuts for slip joints above the discharge level. Swivel joints shall be below the discharge level and shall be of metal-to-metal or metal-to-plastic type as required for the application. Nuts shall have flats for wrench grip. Outlets shall have internal pipe thread, except that when required for the application, the outlets shall have sockets for solder-joint connections. The depth of the water seal shall be not less than 50 mm (2 inches). The interior diameter shall be not more than 3.2 mm (1/8 inch) over or under the nominal size, and interior surfaces shall be reasonably smooth throughout. A copper alloy "P" trap assembly consisting of an adjustable "P" trap and threaded trap wall nipple with cast brass wall flange shall be provided for lavatories. The assembly shall be a standard manufactured unit and may have a rubber-gasketed swivel joint.

2.7 WATER HEATER

Water heater types and capacities shall be as indicated. Each primary water heater shall have controls adjustable from 32 to 49 degrees C (90 to 120 degrees F). The thermal efficiencies and stand by heat losses shall conform to that specified herinafter for each type of water heater specified. The only exception is that the storage capacity need not meet the standard loss requirement if the tank surface area is not insulated to R-12.5 and if a standing light is not used.

2.7.1 Electric Type

Electric type water heaters shall conform to UL 174 . Each element shall conform to drawings. The elements shall be wired so that only one element can operate at a time.

2.8 COMPRESSED AIR SYSTEM

2.8.1 Air Compressors

Air compressor unit shall be a factory-packaged assembly, including 3__ phase, 208 volt motor controls, switches, wiring, accessories, and motor controllers, in a NEMA 250, Type 1 enclosure. Tank-mounted air compressors shall be manufactured to comply with UL listing requirements. Air compressors shall have manufacturer's name and address, together with trade name, and catalog number on a nameplate securely attached to the equipment. Each compressor shall start and stop automatically at upper and lower pressure limits of the system Guards shall shield exposed moving parts. Each duplex compressor system shall be provided with automatic alternation system. Each compressor motor shall be provided with an across-the-line-type magnetic controller, complete with low-voltage release. An intake air filter and silencer shall be provided with each compressor. Aftercooler and moisture separator shall be installed between compressors and air receiver to remove moisture and oil condensates before the air enters the receiver. Aftercoolers shall be either air- or water-cooled, as indicated. The air shall pass through a sufficient number of tubes to affect cooling. Tubes shall be sized to give maximum heat transfer. Water to unit shall be controlled by a solenoid or pneumatic valve which opens when the compressors start and closes when the compressors shut down. Cooling capacity of the aftercooler shall be sized for the total capacity of the compressors. Means shall be provided for draining condensed moisture from the receiver by an automatic float type trap. Capacities of air compressors and receivers shall be as indicated.

2.8.2 Lubricated Compressors

Compressors shall be two-stage, V-belt drive, capable of operating continuously against their designed discharge pressure, and shall operate at a speed not in excess of 1800 rpm. Compressors shall have the capacity and discharge pressure indicated. Compressors shall be assembled complete on a common subbase. The compressor main bearings shall be either roller or ball. The discharge passage of the high pressure air shall be piped to the air receiver with a copper pipe or tubing. A pressure gauge calibrated to 1.03 MPa (150 psi) and equipped with a gauge cock and pulsation dampener shall be furnished for installation adjacent to pressure switches.

2.8.3 Air Receivers

Receivers shall be designed for 1.38 MPa (200 psi) working pressure. Receivers shall be factory air tested to 1-1/2 times the working pressure.

Receivers shall be equipped with safety relief valves and accessories, including pressure gauges and automatic and manual drains. The outside of air receivers may be galvanized or supplied with commercial enamel finish. Receivers shall be designed and constructed in accordance with ASME BPV VIII Div 1 and shall have the design working pressures specified herein. A display of the ASME seal on the receiver or a certified test report from an approved independent testing laboratory indicating conformance to the ASME Code shall be provided.

2.8.4 Intake Air Supply Filter

Dry type air filter shall be provided having a collection efficiency of 99 percent of particles larger than 10 microns. Filter body and media shall withstand a maximum 862 kPa (125 psi), capacity as indicated.

2.8.5 Pressure Regulators

The air system shall be provided with the necessary regulator valves to maintain the desired pressure for the installed equipment. Regulators shall be designed for a maximum inlet pressure of 862 kPa (125 psi) and a maximum temperature of 93 degrees C (200 degrees F). Regulators shall be single-seated, pilot-operated with valve plug, bronze body and trim or equal, and threaded connections. The regulator valve shall include a pressure gauge and shall be provided with an adjustment screw for adjusting the pressure differential from 0 kPa to 862 kPa (0 to 125 psi). Regulator shall be sized as indicated.

PART 3 EXECUTION

3.1 GENERAL INSTALLATION REQUIREMENTS

Hubless cast-iron pipe shall not be installed under concrete floor slabs. Piping located in air plenums shall conform to NFPA 90A requirements. Unprotected plastic pipe shall not be installed in air plenum. Piping located in shafts that constitute air ducts or that enclose air ducts shall be noncombustible in accordance with NFPA 90A. Installation of plastic pipe where in compliance with NFPA may be installed in accordance with PPFA-01. The plumbing system shall be installed complete with necessary fixtures, fittings, traps, valves, and accessories. Water and drainage piping shall be extended 1.5 m outside the building, unless otherwise indicated. A gate valve and drain shall be installed on the water service line inside the building approximately 150 mm above the floor from point of entry. Piping shall be connected to the exterior service lines or capped or plugged if the exterior service is not in place. Sewer and water pipes shall be laid in separate trenches, except when otherwise shown. Exterior underground utilities shall be at least 300 mm below the finish grade or as indicated on the drawings. If trenches are closed or the pipes are otherwise covered before being connected to the service lines, the location of the end of each plumbing utility shall be marked with a stake or other acceptable means. Valves shall be installed with control no lower than the valve body.

3.1.1 Water Pipe, Fittings, and Connections

3.1.1.1 Utilities

The piping shall be extended to fixtures, outlets, and equipment. The hot-water and cold-water piping system shall be arranged and installed to permit draining. The supply line to each item of equipment or fixture,

except faucets, flush valves, or other control valves which are supplied with integral stops, shall be equipped with a shutoff valve to enable isolation of the item for repair and maintenance without interfering with operation of other equipment or fixtures. Supply piping to fixtures, faucets, hydrants, and flushing devices shall be anchored to prevent movement.

3.1.1.2 Cutting and Repairing

The work shall be carefully laid out in advance, and unnecessary cutting of construction shall be avoided. Damage to building, piping, wiring, or equipment as a result of cutting shall be repaired by mechanics skilled in the trade involved.

3.1.1.3 Protection of Fixtures, Materials, and Equipment

Pipe openings shall be closed with caps or plugs during installation. Fixtures and equipment shall be tightly covered and protected against dirt, water, chemicals, and mechanical injury. Upon completion of the work, the fixtures, materials, and equipment shall be thoroughly cleaned, adjusted, and operated. Safety guards shall be provided for exposed rotating equipment.

3.1.1.4 Mains, Branches, and Runouts

Pipe shall be accurately cut and worked into place without springing or forcing. Structural portions of the building shall not be weakened. Aboveground piping shall run parallel with the lines of the building, unless otherwise indicated. Branch pipes from service lines may be taken from top, bottom, or side of main, using crossover fittings required by structural or installation conditions. Supply pipes, valves, and fittings shall be kept a sufficient distance from other work and other services to permit not less than 15 mm between finished covering on the different services. Bare and insulated water lines shall not bear directly against building structural elements so as to transmit sound to the structure or to prevent flexible movement of the lines. Water pipe shall not be buried in or under floors unless specifically indicated or approved. Changes in pipe sizes shall be made with reducing fittings. Use of bushings will not be permitted except for use in situations in which standard factory fabricated components are furnished to accommodate specific excepted installation practice. Change in direction shall be made with fittings, except that bending of pipe 100 mm (4 inches) and smaller will be permitted, provided a pipe bender is used and wide sweep bends are formed. The center-line radius of bends shall be not less than six diameters of the pipe. Bent pipe showing kinks, wrinkles, flattening, or other malformations will not be acceptable.

3.1.1.5 Pipe Drains

Pipe drains shall consist of 20 mm (3/4 inch) hose bibb with renewable seat and gate or full port ball valve ahead of hose bibb. Pipe drains shall be located at low points, 20 mm (3/4 inch) brass plugs or caps shall be provided. Disconnection of the supply piping at the fixture is an acceptable drain.

3.1.1.6 Expansion and Contraction of Piping

Allowance shall be made throughout for expansion and contraction of water pipe. Each hot-water and hot-water circulation riser shall have expansion

loops or other provisions such as offsets, changes in direction, etc., where indicated and/or required. Risers shall be securely anchored as required or where indicated to force expansion to loops. Branch connections from risers shall be made with ample swing or offset to avoid undue strain on fittings or short pipe lengths. Horizontal runs of pipe over 15 m in length shall be anchored to the wall or the supporting construction about midway on the run to force expansion, evenly divided, toward the ends. Sufficient flexibility shall be provided on branch runouts from mains and risers to provide for expansion and contraction of piping. Flexibility shall be provided by installing one or more turns in the line so that piping will spring enough to allow for expansion without straining. If mechanical grooved pipe coupling systems are provided, the deviation from design requirements for expansion and contraction may be allowed pending approval of Contracting Officer.

3.1.2 Compressed Air Piping (Non-Oil Free)

Compressed air piping shall be installed as specified for water piping and suitable for 862 kPa (125 psig) working pressure. Compressed air piping shall have supply lines and discharge terminals legibly and permanently marked at both ends with the name of the system and the direction of flow.

3.1.3 Joints

Installation of pipe and fittings shall be made in accordance with the manufacturer's recommendations. Mitering of joints for elbows and notching of straight runs of pipe for tees will not be permitted. Joints shall be made up with fittings of compatible material and made for the specific purpose intended.

3.1.3.1 Threaded

Threaded joints shall have American Standard taper pipe threads conforming to ASME B1.20.1. Only male pipe threads shall be coated with graphite or with an approved graphite compound, or with an inert filler and oil, or shall have a polytetrafluoroethylene tape applied.

3.1.3.2 Mechanical Couplings

Grooved mechanical joints shall be prepared according to the coupling manufacturer's instructions. Pipe and groove dimensions shall comply with the tolerances specified by the coupling manufacturer. The diameter of grooves made in the field shall be measured using a "go/no-go" gauge, vernier or dial caliper, or narrow-land micrometer. Groove width and dimension of groove from end of the pipe shall be measured and recorded for each change in grooving tool setup to verify compliance with coupling manufacturer's tolerances. Grooved joints shall not be used in concealed locations.

3.1.3.3 Union and Flanged

Unions, flanges and mechanical couplings shall not be concealed in walls, ceilings, or partitions. Unions shall be used on pipe sizes 65 mm (2-1/2 inches) and smaller; flanges shall be used on pipe sizes 80 mm (3 inches) and larger.

3.1.3.4 Cast Iron Soil, Waste and Vent Pipe

Bell and spigot compression and hubless gasketed clamp joints for soil,

waste and vent piping shall be installed per the manufacturer's recommendations.

3.1.3.5 Copper Tube and Pipe

The tube or fittings shall not be annealed when making connections. Connections shall be made with a multiflame torch.

a. Brazed. Brazed joints shall be made in conformance with AWS B2.2, MSS SP-73, and CDA-02 with flux and are acceptable for line sizes. Copper to copper joints shall include the use of copper-phosphorus or copper-phosphorus-silver brazing metal without flux. Brazing of dissimilar metals (copper to bronze or brass) shall include the use of flux with either a copper-phosphorus, copper-phosphorus-silver or a silver brazing filler metal.

b. Soldered. Soldered joints shall be made with flux and are only acceptable for lines 50 mm (2 inches) and smaller. Soldered joints shall conform to ASME B31.5 and CDA-02.

c. Copper Tube Extracted Joint. An extracted mechanical joint may be made in copper tube. Joint shall be produced with an appropriate tool by drilling a pilot hole and drawing out the tube surface to form a collar having a minimum height of three times the thickness of the tube wall. To prevent the branch tube from being inserted beyond the depth of the extracted joint, dimpled depth stops shall be provided. Branch tube shall be notched for proper penetration into fitting to ensure a free flow joint. Extracted joints shall be brazed in accordance with NAPHCC-01 using B-Cup series filler metal in accordance with MSS SP-73. Soldered extracted joints will not be permitted.

3.1.3.6 Plastic Pipe

Acrylonitrile-Butadiene-Styrene (ABS) pipe shall have joints made with solvent cement. PVC and CPVC pipe shall have joints made with solvent cement elastomeric, threading, (threading of Schedule 80 Pipe is allowed only where required for disconnection and inspection; threading of Schedule 40 Pipe is not allowed), or mated flanged.

3.1.4 Dissimilar Pipe Materials

Connections between ferrous and non-ferrous copper pipe shall be made with dielectric unions or flange waterways. Connecting joints between plastic and metallic pipe shall be made with transition fitting for the specific purpose.

3.1.5 Corrosion Protection for Buried Pipe and Fittings

3.1.5.1 Cast Iron and Ductile Iron

Pressure pipe shall have protective coating, a cathodic protection system, and joint bonding. Pipe, fittings, and joints shall have a protective coating. The protective coating shall be completely encasing polyethylene tube or sheet in accordance with AWWA C105. Joints and fittings shall be cleaned, coated with primer, and wrapped with tape. The pipe shall be cleaned, coated, and wrapped prior to pipe tightness testing. Joints and fittings shall be cleaned, coated, and wrapped after pipe tightness

testing. Tape shall conform to AWWA C203 and shall be applied with a 50 percent overlap. Primer shall be as recommended by the tape manufacturer.

3.1.5.2 Steel

Steel pipe, joints, and fittings shall be cleaned, coated with primer, and wrapped with tape. Pipe shall be cleaned, coated, and wrapped prior to pipe tightness testing. Joints and fittings shall be cleaned, coated, and wrapped after pipe tightness testing. Tape shall conform to AWWA C203and shall be applied with a 50 percent overlap. Primer shall be as recommended by the tape manufacturer.

3.1.6 Pipe Sleeves and Flashing

Pipe sleeves shall be furnished and set in their proper and permanent location.

3.1.6.1 Sleeve Requirements

Pipes passing through concrete floors or roofs shall be provided with pipe sleeves fitted into place at the time of construction. Sleeves are not required for cast-iron soil pipe passing through concrete slab on grade, except where penetrating a membrane waterproof floor. A modular mechanical type sealing assembly may be installed in lieu of a waterproofing clamping flange and caulking and sealing of annular space between pipe and sleeve. The seals shall consist of interlocking synthetic rubber links shaped to continuously fill the annular space between the pipe and sleeve with corrosion-protected carbon steel bolts, nuts, and pressure plates. The links shall be loosely assembled with bolts to form a continuous rubber belt around the pipe with a pressure plate under each bolt head and each nut. After the seal assembly is properly positioned in the sleeve, tightening of the bolt shall cause the rubber sealing elements to expand and provide a watertight seal between the pipe and the sleeve. Each seal assembly shall be sized as recommended by the manufacturer to fit the pipe and sleeve involved. Sleeves shall not be installed in structural members, except where indicated or approved. Each sleeve shall extend through its respective floor, or roof, and shall be cut flush with each surface, except for special circumstances. Pipe sleeves passing through floors in wet areas such as mechanical equipment rooms, lavatories, and other plumbing fixture areas shall extend a minimum of 100 mm above the finished floor. Unless otherwise indicated, sleeves shall be of a size to provide a minimum of 6 mm (1/4 inch) clearance between bare pipe and inside of sleeve or between jacket over insulation and sleeves. Sleeves in bearing walls shall be steel pipe or cast-iron pipe. Sleeves in nonbearing walls or ceilings may be steel pipe, cast-iron pipe, galvanized sheet metal with lock-type longitudinal seam, or moisture-resistant fiber or plastic. Plastic sleeves shall not be used in nonbearing fire walls, roofs, or floor/ceilings. Except as otherwise specified, the annular space between pipe and sleeve, or between jacket over insulation and sleeve, shall be sealed as indicated with sealants conforming to ASTM C 920 and with a primer, backstop material and surface preparation as specified in Section 07920 JOINT SEALING. The annular space between pipe and sleeve or between jacket over insulation and sleeve shall not be sealed for interior walls which are not designated as fire rated.

3.1.6.2 Flashing Requirements

Pipes passing through roof waterproofing membrane shall be installed through a 4.9 kg per square meter (16 ounce) copper flashing, each within

an integral skirt or flange. Flashing shall be suitably formed, and the skirt or flange shall extend not less than 200 mm from the pipe and shall be set over the roof membrane in a solid coating of bituminous cement. The flashing shall extend up the pipe a minimum of 250 mm. For cleanouts, the flashing shall be turned down into the hub and caulked after placing the ferrule. Pipes passing through pitched roofs shall be flashed, using lead or copper flashing, with an adjustable integral flange of adequate size to extend not less than 200 mm from the pipe in all directions and lapped into the roofing to provide a watertight seal. The annular space between the flashing and the bare pipe or between the flashing and the metal-jacket-covered insulation shall be sealed as indicated. Flashing for dry vents shall be turned down into the pipe to form a waterproof joint. Pipes, up to and including 250 mm (10 inches) in diameter, passing through roof or floor waterproofing membrane may be installed through a cast-iron sleeve with caulking recess, anchor lugs, flashing-clamp device, and pressure ring with brass bolts. Flashing shield shall be fitted into the sleeve clamping device.

3.1.6.3 Waterproofing

Waterproofing at floor-mounted water closets shall be accomplished by forming a flashing guard from soft-tempered sheet copper. The center of the sheet shall be perforated and turned down approximately 40 mm to fit between the outside diameter of the drainpipe and the inside diameter of the cast-iron or steel pipe sleeve. The turned-down portion of the flashing guard shall be embedded in sealant to a depth of approximately 40 mm; then the sealant shall be finished off flush to floor level between the flashing guard and drainpipe. The flashing guard of sheet copper shall extend not less than 200 mm from the drainpipe and shall be lapped between the floor membrane in a solid coating of bituminous cement. If cast-iron water closet floor flanges are used, the space between the pipe sleeve and drainpipe shall be sealed with sealant and the flashing guard shall be upturned approximately 40 mm to fit the outside diameter of the drainpipe and the inside diameter of the water closet floor flange. The upturned portion of the sheet fitted into the floor flange shall be sealed.

3.1.6.4 Optional Counterflashing

Instead of turning the flashing down into a dry vent pipe, or caulking and sealing the annular space between the pipe and flashing or metal-jacket-covered insulation and flashing, counterflashing may be accomplished by utilizing the following:

a. A standard roof coupling for threaded pipe up to 150 mm (6 inches) in diameter.

b. A tack-welded or banded-metal rain shield around the pipe.

3.1.6.5 Pipe Penetrations of Slab on Grade Floors

Where pipes, fixture drains, floor drains, cleanouts or similar items penetrate slab on grade floors a groove 6 to 13 mm wide by 6 to 10 mm deep shall be formed around the pipe, fitting or drain. The groove shall be filled with a sealant as specified in Section 07920 JOINT SEALING.

3.1.7 Fire Seal

Where pipes pass through fire walls, fire-partitions, fire-rated pipe chase walls or floors above grade, a fire seal shall be provided as specified in

Section 07270 FIRESTOPPING.

3.1.8 Supports

3.1.8.1 General

Hangers used to support piping 50 mm (2 inches) and larger shall be fabricated to permit adequate adjustment after erection while still supporting the load. Pipe guides and anchors shall be installed to keep pipes in accurate alignment, to direct the expansion movement, and to prevent buckling, swaying, and undue strain. Piping subjected to vertical movement when operating temperatures exceed ambient temperatures shall be supported by variable spring hangers and supports or by constant support hangers. In the support of multiple pipe runs on a common base member, a clip or clamp shall be used where each pipe crosses the base support member. Spacing of the base support members shall not exceed the hanger and support spacing required for an individual pipe in the multiple pipe run.

3.1.8.2 Pipe Supports and Structural Bracing, Seismic Requirements

Piping and attached valves shall be supported and braced to resist seismic loads as specified Section 13080. Structural steel required for reinforcement to properly support piping, headers, and equipment, but not shown, shall be provided. Material used for supports shall be as specified in Section 05120 STRUCTURAL STEEL.

3.1.8.3 Pipe Hangers, Inserts, and Supports

Installation of pipe hangers, inserts and supports shall conform to MSS SP-58 and MSS SP-69, except as modified herein.

a. Types 5, 12, and 26 shall not be used.

b. Type 3 shall not be used on insulated pipe.

c. Type 19 and 23 C-clamps shall be torqued per MSS SP-69 and shall have both locknuts and retaining devices furnished by the manufacturer. Field-fabricated C-clamp bodies or retaining devices are not acceptable.

d. Type 20 attachments used on angles and channels shall be furnished with an added malleable-iron heel plate or adapter.

e. Type 24 may be used only on trapeze hanger systems or on fabricated frames.

f. Type 40 shields shall:

(1) Be used on insulated pipe less than 100 mm (4 inches).

(3) Have a high density insert for pipe 50 mm (2 inches) and larger and for smaller pipe sizes when the insulation is suspected of being visibly compressed, or distorted at or near the shield/insulation interface. High density inserts shall have a density of 128 kg per cubic meter (8 pcf) or greater.

g. Horizontal pipe supports shall be spaced as specified in MSS SP-69 and a support shall be installed not over 300 mm from the pipe fitting joint at each change in direction of the piping. Pipe supports shall be spaced not over 1.5 m apart at valves. Operating temperatures in determining hanger spacing for PVC or CPVC pipe shall be 49 degrees C for PVC and 82 degrees C for CPVC. Horizontal pipe runs shall include allowances for expansion and contraction.

h. Vertical pipe shall be supported at each floor, except at slab-on-grade, at intervals of not more than 4.5 m nor more than 2 m from end of risers, and at vent terminations. Vertical pipe risers shall include allowances for expansion and contraction.

i. Type 40 shields used on insulated pipe shall have high density inserts with a density of 128 kg per cubic meter (8 pcf) or greater.

j. Type 35 guides using steel, reinforced polytetrafluoroethylene (PTFE) or graphite slides shall be provided to allow longitudinal pipe movement. Slide materials shall be suitable for the system operating temperatures, atmospheric conditions, and bearing loads encountered. Lateral restraints shall be provided as needed. Where steel slides do not require provisions for lateral restraint the following may be used:

(2) On pipe less than 100 mm (4 inches) a Type 40 shield, attached to the pipe or insulation, may freely rest on a steel plate.

k. Pipe hangers on horizontal insulated pipe shall be the size of the outside diameter of the insulation. The insulation shall be continuous through the hanger on all pipe sizes and applications.

l. Hangers and supports for plastic pipe shall not compress, distort, cut or abrade the piping, and shall allow free movement of pipe except where otherwise required in the control of expansion/contraction.

3.1.9 Pipe Cleanouts

Pipe cleanouts shall be the same size as the pipe except that cleanout plugs larger than 100 mm (4 inches) will not be required. A cleanout installed in connection with cast-iron soil pipe shall consist of a long-sweep 1/4 bend or one or two 1/8 bends extended to the place shown. An extra-heavy cast-brass or cast-iron ferrule with countersunk cast-brass head screw plug shall be caulked into the hub of the fitting and shall be flush with the floor. Cleanouts in connection with other pipe, where indicated, shall be T-pattern, 90-degree branch drainage fittings with cast-brass screw plugs, except plastic plugs shall be installed in plastic pipe. Plugs shall be the same size as the pipe up to and including 100 mm (4 inches). Cleanout tee branches with screw plug shall be installed at the foot of soil and waste. Cleanout tee branches may be omitted on stacks in single story buildings with slab-on-grade construction. Cleanouts on pipe concealed in partitions shall be provided with chromium plated bronze,

nickel bronze, nickel brass or stainless steel flush type access cover plates. Round access covers shall be provided and secured to plugs with securing screw. Square access covers may be provided with matching frames, anchoring lugs and cover screws. Cleanouts in finished walls shall have access covers and frames installed flush with the finished wall. Cleanouts installed in finished floors subject to foot traffic shall be provided with a chrome-plated cast brass, nickel brass, or nickel bronze cover secured to the plug or cover frame and set flush with the finished floor. Heads of fastening screws shall not project above the cover surface. Where cleanouts are provided with adjustable heads, the heads shall be cast iron or plastic.

3.2 WATER HEATERS

3.2.1 Relief Valves

No valves shall be installed between a relief valve and its water heater. The P&T relief valve shall be installed where the valve actuator comes in contact with the hottest water in the heater. Whenever possible, the relief valve shall be installed directly in a tapping in the tank or heater; otherwise, the P&T valve shall be installed in the hot-water outlet piping. A vacuum relief valve shall be provided on the cold water supply line to thewater heater and mounted above and within 150 mm above the top of the tank or water heater.

3.2.2 Connections to Water Heaters

Connections of metallic pipe to water heaters shall be made with dielectric unions or flanges.

3.3 FIXTURES AND FIXTURE TRIMMINGS

Angle stops, straight stops, stops integral with the faucets, or concealed type of lock-shield, and loose-key pattern stops for supplies with threaded, sweat or solvent weld inlets shall be furnished and installed with fixtures. Where connections between copper tubing and faucets are made by rubber compression fittings, a beading tool shall be used to mechanically deform the tubing above the compression fitting. Exposed traps and supply pipes for fixtures and equipment shall be connected to the rough piping systems at the wall, unless otherwise specified under the item. Floor and wall escutcheons shall be as specified. Drain lines and hot water lines of fixtures for handicapped personnel shall be insulated and do not require polished chrome finish. Plumbing fixtures and accessories shall be installed within the space shown.

3.3.1 Fixture Connections

Where space limitations prohibit standard fittings in conjunction with the cast-iron floor flange, special short-radius fittings shall be provided. Connections between earthenware fixtures and flanges on soil pipe shall be made gastight and watertight with a closet-setting compound or neoprene gasket and seal. Use of natural rubber gaskets or putty will not be permitted. Fixtures with outlet flanges shall be set the proper distance from floor or wall to make a first-class joint with the closet-setting compound or gasket and fixture used.

3.3.2 Flushometer Valves

Flushometer valves shall be secured to prevent movement by anchoring the

long finished top spud connecting tube to wall adjacent to valve with approved metal bracket.

3.3.3 Height of Fixture Rims Above Floor

Lavatories shall be mounted with rim 775 mm above finished floor. Wall-hung drinking fountains and water coolers shall be installed with rim 1020 mm above floor.

3.3.4 Fixture Supports

Fixture supports for off-the-floor lavatories, urinals, water closets, and other fixtures of similar size, design, and use, shall be of the chair-carrier type. The carrier shall provide the necessary means of mounting the fixture, with a foot or feet to anchor the assembly to the floor slab. Adjustability shall be provided to locate the fixture at the desired height and in proper relation to the wall. Support plates, in lieu of chair carrier, shall be fastened to the wall structure only where it is not possible to anchor a floor-mounted chair carrier to the floor slab.

3.3.4.1 Support for Steel Stud Frame Partitions

Chair carrier shall be used. The anchor feet and tubular uprights shall be of the heavy duty design; and feet (bases) shall be steel and welded to a square or rectangular steel tube upright. Wall plates, in lieu of floor-anchored chair carriers, shall be used only if adjoining steel partition studs are suitably reinforced to support a wall plate bolted to these studs.

3.3.5 Access Panels

Access panels shall be provided for concealed valves and controls, or any item requiring inspection or maintenance. Access panels shall be of sufficient size and located so that the concealed items may be serviced, maintained, or replaced. Access panels shall be as specified in Section 05500 MISCELLANEOUS METAL.

3.3.6 Traps

Each trap shall be placed as near the fixture as possible, and no fixture shall be double-trapped. Traps installed on cast-iron soil pipe shall be cast iron. Traps installed on steel pipe or copper tubing shall be recess-drainage pattern, or brass-tube type. Traps installed on plastic pipe may be plastic conforming to ASTM D 3311.

3.4 VIBRATION-ABSORBING FEATURES

Mechanical equipment, including air compressors, shall be isolated from the building structure by approved vibration-absorbing features, unless otherwise shown. Each foundation shall include an adequate number of standard isolation units. Each unit shall consist of machine and floor or foundation fastening, together with intermediate isolation material, and shall be a standard product with printed load rating. Piping connected to mechanical equipment shall be provided with flexible connectors.

3.4.1 Tank- Compressors

Floor attachment shall be as recommended by compressor manufacturer.

3.4.2 Foundation-Mounted Compressors

Foundation attachment shall be as recommended by the compressor manufacturer.

3.5 ESCUTCHEONS

Escutcheons shall be provided at finished surfaces where bare or insulated piping, exposed to view, passes through floors, walls, or ceilings, except in boiler, utility, or equipment rooms. Escutcheons shall be fastened securely to pipe or pipe covering and shall be satin-finish, corrosion-resisting steel, polished chromium-plated zinc alloy, or polished chromium-plated copper alloy. Escutcheons shall be either one-piece or split-pattern, held in place by internal spring tension or setscrew.

3.6 PAINTING

Painting of pipes, hangers, supports, and other iron work, either in concealed spaces or exposed spaces, is specified in Section 09900PAINTING, GENERAL.

3.7 TESTS FLUSHING AND STERILIZATION

3.7.1 Plumbing System

The plumbing system shall be tested in accordance with NAPHCC-01.

3.7.1.1 Compressed Air Piping (Nonoil-Free)

Piping systems shall be filled with oil-free dry air or gaseous nitrogen to 1.03 MPa and hold this pressure for 2 hours with no drop in pressure.

3.7.2 Defective Work

If inspection or test shows defects, such defective work or material shall be replaced or repaired as necessary and inspection and tests shall be repeated. Repairs to piping shall be made with new materials. Caulking of screwed joints or holes will not be permitted.

3.7.3 System Flushing

After tests are completed, potable water piping shall be flushed. In general, sufficient water shall be used to produce a minimum water velocity of 0.762 meters per second (2.5 feet per second) through piping being flushed. Flushing shall be continued until discharge water shows no discoloration. System shall be drained at low points. Strainer screens shall be removed, cleaned, and replaced in line. After flushing and cleaning, systems shall be prepared for service by immediately filling water piping with clean, fresh potable water. Any stoppage, discoloration, or other damage to the finish, furnishings, or parts of the building due to the Contractor's failure to properly clean the piping system shall be repaired by the Contractor. When the work is complete, the hot-water system shall be adjusted for uniform circulation. Flushing devices and automatic control systems shall be adjusted for proper operation.

3.7.4 Operational Test

Upon completion of and prior to acceptance of the installation, the Contractor shall subject the plumbing system to operating tests to

demonstrate satisfactory functional and operational efficiency. Such operating tests shall cover a period of not less than 8 hours for each system and shall include the following information in a report with conclusion as to the adequacy of the system:

a. Time, date, and duration of test.

b. Water pressures at the most remote and the highest fixtures.

c. Operation of each fixture and fixture trim.

d. Operation of each valve, hydrant, and faucet.

f. Temperature of each domestic hot-water supply.

g. Operation of each floor drain by flooding with water.

h. Operation of each vacuum breaker .

j. Compressed air readings at each compressor and at each outlet. Each indicating instrument shall be read at 1/2 hour intervals. The report of the test shall be submitted in quadruplicate. The Contractor shall furnish instruments, equipment, and personnel required for the tests; the Government will furnish the necessary water and electricity.

3.7.5 Disinfection

After pressure tests have been made, the entire domestic hot- and cold-water distribution system shall be sterilized. System shall be thoroughly flushed with water of sufficient velocity until all entrained dirt and other foreign material have been removed, before introducing chlorinating material. The chlorinating material shall be hypochlorites or liquid chlorine. Water chlorination procedure shall be in accordance with AWWA M20. The chlorinating material shall be fed into the water piping system at a constant rate at a concentration of at least 50 parts per million (ppm). A properly adjusted hypochlorite solution injected into the main with a hypochlorinator, or liquid chlorine injected into the main through a solution-feed chlorinator, shall be used. The chlorine residual shall be checked at intervals to ensure that the proper level is maintained. Chlorine application shall continue until the entire main is filled. The water shall remain in the system for a minimum of 24 hours. Each valve in the system being sterilized shall be opened and closed several times during the contact period to ensure its proper disinfection. Following the 24-hour period, no less than 25 ppm chlorine residual shall remain in the system. Water tanks shall be disinfected by the addition of chlorine directly to the filling water. Following a 6 hour period, no less than 50 ppm chlorine residual shall remain in the tank. The system including the tanks shall then be flushed with clean water until the residual chlorine is reduced to less than one part per million. During the flushing period each valve and faucet shall be opened and closed several times. From several points in the system the Contracting Officer will take samples of water in properly sterilized containers for bacterial examination. The samples of water shall be tested for total coliform organisms (coliform bacteria, fecal coliform, streptococcal, and other

bacteria) in accordance with AWWA-01. The testing method used shall be either the multiple-tube fermentation technique or the membrane-filter technique. The sterilizing shall be repeated until tests indicate the absence of coliform organisms (zero mean coliform density per 100 milliliters) in the samples for at least 2 full days. The system will not be accepted until satisfactory bacteriological results have been obtained.

3.8 PLUMBING FIXTURE SCHEDULE

P-1 WATER CLOSET:

Siphon-jet, elongated bowl, top supply spud, ASME A112.19.2M, floor mounted. Floor flange shall be copper alloy, cast iron, or plastic.

Gasket shall be wax type.

Seat - CID A-A-238, Type A, white _____ plastic, elongated, open front.

Flushometer Valve - ASSE 1037, large diaphragm type with non-hold-open feature, backcheck angle control stop, and vacuum breaker. Minimum upper chamber inside diameter of not less than 66.7 mm (2-5/8 inches) at the point where the diaphragm is sealed between the upper and lower chambers. The maximum water use shall be 6 liters per flush.

P-2 LAVATORY:

Manufacturer's standard sink depth, vitreous china ASME A112.19.2M, [ledge back] , rectangular.

Faucet - Faucets shall be single center set combination control, mixing type. Faucets shall have metal replaceable cartridge control unit or metal cartridge units with diaphragm which can be replaced without special tools. Valves and handles shall be copper alloy. Connection between valve and spout for center-set faucet shall be of rigid metal tubing. Flow shall be limited to 1 liter per cycle at a flowing water pressure of 549 kPa if a metering device or fitting is used that limits the period of water discharge such as a foot switch or fixture occupancy sensor. If a metering device is not used, the flow shall be limited to 0.16 liters per second at a flowing pressure of 549 kPa.

Handles - Crown type. Cast, formed, or drop forged copper alloy.

Drain - Strainer shall be copper alloy or stainless steel. See paragraph FIXTURES for optional plastic accessories.

P-3 ELECTRIC DRINKING FOUNTAINS:
Water cooler drinking fountains shall: be self contained, conform to ARI 1010, use one of the fluorocarbon gases conforming to ARI 700 and ASHRAE 34 which has an Ozone Depletion Potential of less than or equal to 0.05, have a capacity to deliver 30.2 liters per hour (8 gph) of water at 10 degrees C (50 degrees F) with an inlet water temperature of 27 degrees C (80 degrees F) while residing in a room environment of 32 degrees C (90 degrees F), and have self-closing valves. Self-closing valves shall have automatic stream regulators, have a flow control capability, have a push button actuation or have a cross-shaped index metal turn handle without a hood. Exposed surfaces of stainless steel shall have No. 4 general polish finish. Spouts shall provide a flow of water at least 100 mm (4 inches) high so as to allow the insertion of a cup or glass under the flow of water.

Surface Wall-Mounted - Surface wall-mounted units shall be 336.6 mm (13-1/4 inches) wide, 330.2 mm (13 inches) deep, and have a back height of 152.4 to 203.2 mm (6 to 8 inches). The bowl shall be made of corrosion resisting steel. The unit shall have concealed fasteners and be for interior installation.

3.9 POSTED INSTRUCTIONS

Framed instructions under glass or in laminated plastic, including wiring and control diagrams showing the complete layout of the entire system, shall be posted where directed. Condensed operating instructions explaining preventive maintenance procedures, methods of checking the system for normal safe operation, and procedures for safely starting and stopping the system shall be prepared in typed form, framed as specified above for the wiring and control diagrams and posted beside the diagrams. The framed instructions shall be posted before acceptance testing of the systems.

3.10 PERFORMANCE OF WATER HEATING EQUIPMENT

Standard rating condition terms are as follows:

EF = Energy factor, overall efficiency.

ET = Thermal efficiency with 21 degrees C delta T.

EC = Combustion efficiency, 100 percent - flue loss when smoke = o (trace is permitted).

SL = Standby loss in W/0.093 sq. m. based on 27 degrees C delta T, or in percent per hour based on nominal 38 degrees C delta T.

HL = Heat loss of tank surface area.

V = Storage volume in liters

3.10.1 Storage Water Heaters

3.10.1.1 Electric

a. Storage capacity of 454 liters or less, and input rating of 12 kW or less: minimum energy factor (EF) shall be 0.95-0.00132V per 10 CFR 430.

b. Storage capacity of more than 454 liters or input rating more than 12 kW: maximum SL shall be 1.9 w/0.093 sq. m. per ASHRAE 90.1, Addenda B.

TABLE I

PIPE AND FITTING MATERIALS FOR

DRAINAGE, WASTE, AND VENT PIPING SYSTEMS

		SERVICE				
Item No.	Pipe and Fitting Materials	A	B	C	D	F
1	Cast iron soil pipe and fittings, hub and spigot, ASTM A 74 with compression gaskets	X	X	X		
2	Cast iron pipe and fittings hubless, CISPI 301 and ASTM A 888	X	X	X	X	
3	Cast iron drainage fittings, threaded, ASME B16.12 for use with Item 10	X		X	X	
4	Cast iron screwed fittings (threaded) ASME B16.4 for use with Item 10				X	
5	Grooved pipe couplings, ferrous and non-ferrous pipe ASTM A 536 and ASTM A 47	X	X		X	
6	Ductile iron grooved joint fittings for ferrous pipe ASTM A 536 and ASTM A 47 for use with Item 5	X	X		X	
7	Bronze sand casting grooved joint pressure fittings for non-ferrous pipe ASTM B 584, for use with Item 5	X	X		X	
8	Wrought copper grooved joint pressure pressure fittings for non-ferrous pipe ASTM B 75 C12200, ASTM B 152 C11000, ASME B16.22 ASME B16.22 for use with Item 5	X	X			
9	Malleable-iron threaded fittings, galvanized ASME B16.3 for use with Item 10				X	
10	Steel pipe, seamless galvanized, ASTM A 53, Type S, Grade B	X			X	
11	Seamless red brass pipe, ASTM B 43					
12	Bronzed flanged fittings, ASME B16.24 for use with Items 11 and 14				X	

TABLE I

PIPE AND FITTING MATERIALS FOR

DRAINAGE, WASTE, AND VENT PIPING SYSTEMS

		SERVICE				
Item No.	Pipe and Fitting Materials	A	B	C	D	F
13	Cast copper alloy solder joint pressure fittings, ASME B16.18 for use with Item 14				X	
14	Seamless copper pipe, ASTM B 42					
15	Cast bronze threaded fittings, ASME B16.15				X	
16	Copper drainage tube, (DWV), ASTM B 306	X*	X	X*	X	
17	Wrought copper and wrought alloy solder-joint drainage fittings. ASME B16.29	X	X	X	X	
18	Cast copper alloy solder joint drainage fittings, DWV, ASME B16.23	X	X	X	X	
19	Acrylonitrile-Butadiene-Styrene (ABS) plastic drain, waste, and vent pipe and fittings ASTM D 2661, ASTM F 628	X	X	X	X	X
20	Polyvinyl Chloride plastic drain, waste and vent pipe and fittings, ASTM D 2665, ASTM F 891, (Sch 40)	X	X	X	X	X
21	Process glass pipe and fittings, ASTM C 1053					X
22	High-silicon content cast iron pipe and fittings (hub and spigot, and mechanical joint), ASTM A 518		X			
23	Polypropylene (PP) waste pipe and fittings, ASTM D 4101					X
24	Filament-wound reinforced thermosetting resin (RTRP) pipe, ASTM D 2996					X

SERVICE:

A - Underground Building Soil, Waste and Storm Drain

TABLE I

PIPE AND FITTING MATERIALS FOR

DRAINAGE, WASTE, AND VENT PIPING SYSTEMS

		SERVICE				
Item No.	Pipe and Fitting Materials	A	B	C	D	F

B - Aboveground Soil, Waste, Drain In Buildings
C - Underground Vent
D - Aboveground Vent

* - Hard Temper

TABLE II

PIPE AND FITTING MATERIALS FOR PRESSURE PIPING SYSTEMS

		SERVICE			
Item No.	Pipe and Fitting Materials	A	B	C	D
1	Malleable-iron threaded fittings, a. Galvanized, ASME B16.3 for use with Item 4a	X	X	X	
	b. Same as "a" but not galvanized for use with Item 4b			X	
2	Grooved pipe couplings, ferrous pipe ASTM A 536 and ASTM A 47, non-ferrous pipe, ASTM A 536 and ASTM A 47	X	X	X	
3	Ductile iron grooved joint fittings for ferrous pipe ASTM A 536 and ASTM A 47 for use with Item 2	X	X	X	
4	Steel pipe: a. Seamless, galvanized, ASTM A 53, Type S, Grade B	X	X	X	X
	b. Seamless, black, ASTM A 53, Type S, Grade B			X	
5	Seamless red brass pipe, ASTM B 43	X	X		X
6	Bronze flanged fittings, ASME B16.24 for use with Item 4	X	X		X
7	Seamless copper pipe, ASTM B 42	X	X		X
8	Seamless copper water tube, ASTM B 88	X**	X**	X**	X***
9	Seamless and welded copper distribution tube (Type D) ASTM B 641	X**	X**	X**	X****
10	Cast bronze threaded fittings, ASME B16.15 for use with Items 7 and 8	X	X		X
11	Wrought copper and bronze solder-joint pressure fittings, ASME B16.22 for use with Items 7 and 8	X	X	X	X

TABLE II

PIPE AND FITTING MATERIALS FOR PRESSURE PIPING SYSTEMS

		SERVICE			
Item No.	Pipe and Fitting Materials	A	B	C	D
12	Cast copper alloy solder-joint pressure fittings, ASME B16.18 for use with Items 7 and 8	X	X	X	X
13	Bronze and sand castings grooved joint pressure fittings for non-ferrous pipe ASTM B 584, for use with Item 2	X	X	X	
14	Polyethylene (PE) plastic pipe, Schedules 40 and 80, based on outside diameter ASTM D 2447	X			X
15	Polyethylene (PE) plastic pipe (SDR-PR), based on controlled outside diameter, ASTM D 3035	X			X
16	Polyethylene (PE) plastic pipe (SIDR-PR), based on controlled inside diameter, ASTM D 2239	X			X
17	Butt fusion polyethylene (PE) plastic pipe fittings, ASTM D 3261 for use with Items 12, 13, and 16	X			X
18	Socket-type polyethylene fittings for outside diameter-controlled polyethylene pipe, ASTM D 2683 for use with Item 13	X			X
19	Polyethylene (PE) plastic tubing, ASTM D 2737	X			X
20	Chlorinated polyvinyl chloride (CPVC) plastic hot and cold water distribution system, ASTM D 2846	X	X		X
21	Chlorinated polyvinyl chloride (CPVC) plastic pipe, Schedule 40 and 80, ASTM F 441	X			X
22	Chlorinated polyvinyl chloride (CPVC) plastic pipe (SDR-PR) ASTM F 442	X			X
23	Threaded chlorinated polyvinyl chloride (CPVC) plastic pipe fittings, Schedule 80, ASTM F 437, for use with Items 20, and 21	X	X		X

TABLE II

PIPE AND FITTING MATERIALS FOR PRESSURE PIPING SYSTEMS

		SERVICE			
Item No.	Pipe and Fitting Materials	A	B	C	D
24	Socket-type chlorinated polyvinyl chloride (CPVC) plastic pipe fittings, Schedule 40, ASTM F 438 for use with Item 23	X	X		X
25	Socket-type chlorinated polyvinyl chloride (CPVC) plastic pipe fittings Schedule 80, ASTM F 439 for use with Item 23	X	X		X
26	Polyvinyl chloride (PVC) plastic pipe, Schedules 40, 80, and 120, ASTM D 1785	X			X
27	Polyvinyl chloride (PVC) pressure-rated pipe (SDR Series), ASTM D 2241	X			X
28	Polyvinyl chloride (PVC) plastic pipe fittings, Schedule 40, ASTM D 2466	X			X
29	Socket-type polyvinyl chloride (PVC) plastic pipe fittings, schedule 80, ASTM D 2467	X			X
30	Threaded polyvinyl chloride (PVC) plastic pipe fittings, schedule 80, ASTM D 2464	X			X
31	Joints for IPS pvs pipe using solvent cement, ASTM D 2672	X			X
32	Filament-wound reinforced thermosetting resin (RTRP) pipe, ASTM D 2996	X	X		
33	Steel pipeline flanges, MSS SP-44	X	X		
34	Fittings: brass or bronze; ASME B16.15, and ASME B16.18 ASTM B 828	X	X		
35	Carbon steel pipe unions, socket-welding and threaded, MSS SP-83	X	X	X	
36	Malleable-iron threaded pipe unions ASME B16.39	X	X		
37	Nipples, pipe threaded ASTM A 733	X	X	X	

TABLE II

PIPE AND FITTING MATERIALS FOR PRESSURE PIPING SYSTEMS

		SERVICE			
Item No.	Pipe and Fitting Materials	A	B	C	D

A - Cold Water Aboveground

B - Hot Water 82 degree C Maximum Aboveground

C - Compressed Air Lubricated

D - Cold Water Service Belowground

Indicated types are minimum wall thicknesses.

** - Type L - Hard

*** - Type K - Hard temper with brazed joints only or type K-soft temper without joints in or under floors

**** - In or under slab floors only brazed joints

TABLE III

STANDARD RATING CONDITIONS AND MINIMUM PERFORMANCE RATINGS FOR WATER HEATING EQUIPMENT

A. STORAGE WATER HEATERS

FUEL	STORAGE CAPACITY LITERS	INPUT RATING	TEST PROCEDURE	REQUIRED PERFORMANCE
Elect.	454 max.	12 kW max.	10 CFR 430	EF = 0.95-0.00132V minimum
Elect.	454 min. OR	12 kW min.	ASHRAE 90.1 (Addenda B)	SL = 1.9 W/0.09 sq. m. maximum

TERMS:

EF = Energy factor, overall efficiency.
ET = Thermal efficiency with 21 degrees C delta T.
EC = Combustion efficiency, 100 percent - flue loss when smoke = 0 (trace is permitted).
SL = Standby loss in W/0.09 sq. m. based on 27 degrees C delta T, or in percent per hour based on nominal 32 degrees C delta T.
HL = Heat loss of tank surface area
V = Storage volume in gallons

-- End of Section --

SECTION TABLE OF CONTENTS

DIVISION 15 - MECHANICAL

SECTION 15488

GAS PIPING SYSTEMS

PART 1 GENERAL

1.1 REFERENCES
1.2 GENERAL REQUIREMENTS
1.2.1 Standard Products
1.2.2 Verification of Dimensions
1.3 SUBMITTALS

PART 2 PRODUCTS

2.1 PIPE AND FITTINGS
2.1.1 Steel Pipe, Joints, and Fittings
2.1.2 Aluminum Alloy Pipe and Tubing, Joints, and Fittings
2.1.3 Steel Tubing, Joints and Fittings
2.1.4 Thermoplastic Pipe, Tubing, Joints, and Fittings
2.1.5 Fiberglass Pipe, Joints, and Fittings
2.1.6 Sealants for Steel Pipe Threaded Joints
2.1.7 Identification
2.1.8 Flange Gaskets
2.1.9 Pipe Threads
2.1.10 Escutcheons
2.1.11 Gas Transition Fittings
2.1.12 Insulating Pipe Joints
2.1.12.1 Insulating Joint Material
2.1.12.2 Threaded Pipe Joints
2.1.12.3 Flanged Pipe Joints
2.1.13 Flexible Connectors
2.2 VALVES
2.2.1 Valves 50 mm (2 Inches) and Smaller
2.2.2 Valves 65 mm (2-1/2 Inches) and Larger
2.3 PIPE HANGERS AND SUPPORTS

PART 3 EXECUTION

3.1 EXCAVATION AND BACKFILLING
3.2 GAS PIPING SYSTEM
3.2.1 Protection of Materials and Components
3.2.2 Workmanship and Defects
3.3 PROTECTIVE COVERING
3.3.1 Aboveground Metallic Piping Systems
3.3.1.1 Ferrous Surfaces
3.3.1.2 Nonferrous Surfaces
3.4 INSTALLATION
3.4.1 Metallic Piping Installation
3.4.2 Metallic Tubing Installation
3.4.3 Connections Between Metallic Piping

3.4.4 Concealed Piping in Buildings
3.4.4.1 Piping in Partitions
3.4.5 Aboveground Piping
3.4.6 Final Gas Connections
3.5 PIPE JOINTS
3.5.1 Threaded Metallic Joints
3.5.2 Welded Metallic Joints
3.5.3 Flared Metallic Tubing Joints
3.5.4 Solder or Brazed Joints
3.6 PIPE SLEEVES
3.7 PIPES PENETRATING WATERPROOFING MEMBRANES
3.8 FIRE SEAL
3.9 ESCUTCHEONS
3.10 SPECIAL REQUIREMENTS
3.11 BUILDING STRUCTURE
3.12 PIPING SYSTEM SUPPORTS
3.13 ELECTRICAL BONDING AND GROUNDING
3.14 SHUTOFF VALVE
3.15 TESTING
3.15.1 Pressure Tests
3.15.2 Pressure Tests for Liquified Petroleum Gas
3.15.3 Test With Gas
3.15.4 Purging
3.15.5 Labor, Materials and Equipment

-- End of Section Table of Contents --

SECTION 15488

GAS PIPING SYSTEMS

PART 1 GENERAL

1.1 REFERENCES

The publications listed below form a part of this specification to the extent referenced. The publications are referred to in the text by basic designation only.

AMERICAN GAS ASSOCIATION (AGA)

AGA-01	(1989) A.G.A. Plastic Pipe Manual for Gas Service

AMERICAN NATIONAL STANDARDS INSTITUTE

ANSI Z21.45	(1992; Z21.4a; Z21.4b) Flexible Connectors of Other Than All-Metal Construction for Gas Appliances
ANSI Z21.69	(1992; Z21.69a) Connectors for Movable Gas Appliances

AMERICAN PETROLEUM INSTITUTE (API)

API Spec 6D	(1994) Specification for Pipeline Valves (Gate, Plug, Ball, and Check Valves)

AMERICAN SOCIETY FOR TESTING AND MATERIALS (ASTM)

ASTM A 539	(1990a) Electric-Resistance-Welded Coiled Steel Tubing for Gas and Fuel Oil Lines
ASTM B 210	(1995) Aluminum and Aluminum-Alloy Drawn Seamless Tubes
ASTM B 241	(1995a) Aluminum and Aluminum-Alloy Seamless Pipe and Seamless Extruded Tube
ASTM D 2513	(1995c) Thermoplastic Gas Pressure Pipe, Tubing, and Fittings
ASTM D 2517	(1981; R 1987) Reinforced Epoxy Resin Gas Pressure Pipe and Fittings

AMERICAN SOCIETY OF MECHANICAL ENGINEERS (ASME)

ASME B1.20.1	(1983; R 1992) Pipe Threads, General Purpose (Inch)
ASME B16.3	(1992) Malleable Iron Threaded Fittings
ASME B16.5	(1988; Errata Oct 88; B16.5a) Pipe Flanges

	and Flanged Fittings
ASME B16.9	(1993) Factory-Made Wrought Steel Buttwelding Fittings
ASME B16.11	(1991) Forged Fittings, Socket-Welding and Threaded
ASME B16.21	(1992) Nonmetallic Flat Gaskets for Pipe Flanges
ASME B16.33	(1990) Manually Operated Metallic Gas Valves for Use in Gas Piping Systems Up to 125 psig (Sizes 1/2 through 2)
ASME B31.2	(1968) Fuel Gas Piping
ASME B36.10M	(1985; R 1994) Welded and Seamless Wrought Steel Pipe

MANUFACTURERS STANDARDIZATION SOCIETY OF THE VALVE AND FITTINGS INDUSTRY (MSS)

MSS SP-25	(1993) Standard Marking System for Valves, Fittings, Flanges and Unions
MSS SP-58	(1993) Pipe Hangers and Supports - Materials, Design and Manufacture
MSS SP-69	(1991) Pipe Hangers and Supports - Selection and Application

NATIONAL FIRE PROTECTION ASSOCIATION (NFPA)

NFPA 54	(1992) National Fuel Gas Code
NFPA 70	(1996) National Electrical Code

STEEL STRUCTURES PAINTING COUNCIL (SSPC)

SSPC SP 6	(1994) Commercial Blast Cleaning

UNDERWRITERS LABORATORIES (UL)

UL-06	(1994; Supple; Rev thru March 1996)Gas and Oil Equipment Directory

1.2 GENERAL REQUIREMENTS

1.2.1 Standard Products

Materials and equipment shall be the standard products of a manufacturer regularly engaged in the manufacture of the products and shall essentially duplicate items that have been in satisfactory use for at least 2 years prior to bid opening. Asbestos or products containing asbestos shall not be used. Manufacturer's descriptive data and installation instructions shall be submitted for approval for compression-type mechanical joints used in joining dissimilar materials and for insulating joints. Valves, flanges and fittings shall be marked in accordance with MSS SP-25.

1.2.2 Verification of Dimensions

The Contractor shall become familiar with all details of the work, verify all dimensions in the field, and shall advise the Contracting Officer of any discrepancy before performing the work.

1.3 SUBMITTALS

Government approval is required for submittals with a "GA" designation; submittals having an "FIO" designation are for information only. The following shall be submitted in accordance with Section 01330 SUBMITTAL PROCEDURES:

SD-01 Data

SD-04 Drawings

Gas Piping System; FIO.

Drawings showing location, size and all branches of pipeline; location of all required shutoff valves; and instructions necessary for the installation of connectors and supports.

PART 2 PRODUCTS

2.1 PIPE AND FITTINGS

2.1.1 Steel Pipe, Joints, and Fittings

Steel pipe shall conform to ASME B36.10M. Malleable-iron threaded fittings shall conform to ASME B16.3. Steel pipe flanges and flanged fittings including bolts, nuts, and bolt pattern shall be in accordance with ASME B16.5. Wrought steel buttwelding fittings shall conform to ASME B16.9. Socket welding and threaded forged steel fittings shall conform to ASME B16.11.

2.1.2 Aluminum Alloy Pipe and Tubing, Joints, and Fittings

Aluminum alloy pipe shall conform to ASTM B 241, except alloy 5456 shall not be used, and the ends of each length of pipe shall be marked indicating it conforms to NFPA 54. Pipe joints shall be threaded, flanged, brazed or welded.

Aluminum alloy tubing shall conform to ASTM B 210, Type A or B, or ASTM B 241, Type A or equivalent. Tubing joints shall be made up with gas tubing fittings recommended by the tubing manufacturer.

2.1.3 Steel Tubing, Joints and Fittings

Steel tubing shall conform to ASTM A 539. Tubing joints shall be made up with gas tubing fittings recommended by the tubing manufacturer.

2.1.4 Thermoplastic Pipe, Tubing, Joints, and Fittings

Thermoplastic pipe, tubing, joints and fittings shall conform to ASTM D 2513.

2.1.5 Fiberglass Pipe, Joints, and Fittings

Fiberglass piping systems shall conform to ASTM D 2517.

2.1.6 Sealants for Steel Pipe Threaded Joints

Joint sealing compound shall be listed in UL-06, Class 20 or less. Tetrafluoroethylene tape shall conform to UL-06.

2.1.7 Identification

Pipe flow markings and metal tags shall be provided as required.

2.1.8 Flange Gaskets

Gaskets shall be nonasbestos compressed material in accordance with ASME B16.21, 1.6 mm (1/16 inch) thickness, full face or self-centering flat ring type. The gaskets shall contain aramid fibers bonded with styrene butadiene rubber (SBR) or nitrile butadiene rubber (NBR) suitable for a maximum 316 degrees C (600 degrees F) service. NBR binder shall be used for hydrocarbon service.

2.1.9 Pipe Threads

Pipe threads shall conform to ASME B1.20.1.

2.1.10 Escutcheons

Escutcheons shall be chromium-plated steel or chromium-plated brass, either one piece or split pattern, held in place by internal spring tension or set screw.

2.1.11 Gas Transition Fittings

Gas transition fittings shall be manufactured steel fittings approved for jointing metallic and thermoplastic or fiberglass pipe. Approved transition fittings are those that conform to AGA-01 requirements for transitions fittings.

2.1.12 Insulating Pipe Joints

2.1.12.1 Insulating Joint Material

Insulating joint material shall be provided between flanged or threaded metallic pipe systems to control galvanic or electrical action.

2.1.12.2 Threaded Pipe Joints

Joints for threaded pipe shall be steel body nut type dielectric unions with insulating gaskets.

2.1.12.3 Flanged Pipe Joints

Joints for flanged pipe shall consist of full face sandwich-type flange insulating gasket of the dielectric type, insulating sleeves for flange bolts, and insulating washers for flange nuts.

2.1.13 Flexible Connectors

Flexible connectors for connecting gas utilization equipment to building

gas piping shall conform to ANSI Z21.45. Flexible connectors for movable food service equipment shall conform to ANSI Z21.69.

2.2 VALVES

Valves shall be suitable for shutoff or isolation service and shall conform to the following:

2.2.1 Valves 50 mm (2 Inches) and Smaller

Valves 50 mm (2 inches) and smaller shall conform to ASME B16.33 and shall be of materials and manufacture compatible with system materials used.

2.2.2 Valves 65 mm (2-1/2 Inches) and Larger

Valves 65 mm (2-1/2 inches) and larger shall be carbon steel conforming to API Spec 6D, Class 150.

2.3 PIPE HANGERS AND SUPPORTS

Pipe hangers and supports shall conform to MSS SP-58 and MSS SP-69.

PART 3 EXECUTION

3.1 EXCAVATION AND BACKFILLING

Earthwork shall be as specified in Section 02222 EXCAVATION, TRENCHING AND BACKFILLING FOR UTILITIES SYSTEMS.

3.2 GAS PIPING SYSTEM

Gas piping system shall be from the point of delivery, defined as the outlet of the service regulator & shutoff valve, specified in Section 02685 GAS DISTRIBUTION SYSTEM, to the connections to the LPG tank.

3.2.1 Protection of Materials and Components

Pipe and tube openings shall be closed with caps or plugs during installation. Equipment shall be protected from dirt, water, and chemical or mechanical damage. At the completion of all work, the entire system shall be thoroughly cleaned.

3.2.2 Workmanship and Defects

Piping, tubing and fittings shall be clear and free of cutting burrs and defects in structure or threading and shall be thoroughly brushed and chip-and scale-blown. Defects in piping, tubing or fittings shall not be repaired. When defective piping, tubing, or fittings are located in a system, the defective material shall be replaced.

3.3 PROTECTIVE COVERING

3.3.1 Aboveground Metallic Piping Systems

3.3.1.1 Ferrous Surfaces

Shop primed surfaces shall be touched up with ferrous metal primer. Surfaces that have not been shop primed shall be solvent cleaned. Surfaces that contain loose rust, loose mill scale and other foreign substances

shall be mechanically cleaned by power wire brushing [or commercial sand blasted conforming to SSPC SP 6] and primed with ferrous metal primer [or vinyl type wash coat]. Primed surface shall be finished with two coats of exterior oil paint or vinyl paint meeting FS TT-E-2784 Type III.

3.3.1.2 Nonferrous Surfaces

Except for aluminum alloy pipe, nonferrous surfaces shall not be painted. Surfaces of aluminum alloy pipe and fittings shall be painted to protect against external corrosion where they contact masonry, plaster, insulation, or are subject to repeated wettings by such liquids as water, detergents or sewage. The surfaces shall be solvent-cleaned and treated with vinyl type wash coat. A first coat of enamel paint and a second coat of alkyd gloss enamel shall be applied meeting FS-TT-E-2784, Type I..

3.4 INSTALLATION

Installation of the gas system shall be in conformance with the manufacturer's recommendations and applicable provisions of NFPA 54, AGA-01, and as indicated. Pipe cutting shall be done without damage to the pipe. Unless otherwise authorized, cutting shall be done by an approved type of mechanical cutter. Wheel cutters shall be used where practicable.

3.4.1 Metallic Piping Installation

Changes in direction of piping shall be made with fittings only; mitering or notching pipe to form elbows and tees or other similar type construction will not be permitted. Branch connection may be made with either tees or forged branch outlet fittings. Branch outlet fittings shall be forged, flared for improvement of flow where attached to the run, and reinforced against external strains. Aluminum alloy pipe shall not be used in exterior locations or underground.

3.4.2 Metallic Tubing Installation

Metallic tubing shall be installed using gas tubing fittings approved by the tubing manufacturer. Branch connections shall be made with tees. All tubing end preparation shall be made with tools designed for the purpose. Aluminum alloy tubing shall not be used in exterior locations or underground.

3.4.3 Connections Between Metallic Piping

Connections shall be made only outside, underground, and with approved transition fittings.

3.4.4 Concealed Piping in Buildings

When installing piping which is to be concealed, unions, tubing fittings, running threads, right- and left-hand couplings, bushings, and swing joints made by combinations of fittings shall not be used.

3.4.4.1 Piping in Partitions

Concealed piping shall be located in hollow rather than solid partitions. Tubing passing through walls or partitions shall be protected against physical damage.

3.4.5 Aboveground Piping

Aboveground piping shall be run as straight as practicable along the alignment indicated and with a minimum of joints. Piping shall be separately supported. Exposed horizontal piping shall not be installed farther than 150 mm from nearest parallel wall in laundry areas where clothes hanging could be attempted.

3.4.6 Final Gas Connections

Unless otherwise specified herein, final connections shall be made with rigid metallic pipe and fittings. Flexible connectors may be used for final connections to gas utilization equipment.In addition to cautions listed in instructions required by ANSI standards for flexible connectors, insure that flexible connectors do not pass through equipment cabinet. Provide accessible gas shutoff valve and coupling for each gas equipment item.

3.5 PIPE JOINTS

Pipe joints shall be designed and installed to effectively sustain the longitudinal pull-out forces caused by contraction of the piping or superimposed loads.

3.5.1 Threaded Metallic Joints

Threaded joints in metallic pipe shall have tapered threads evenly cut and shall be made with UL approved graphite joint sealing compound for gas service or tetrafluoroethylene tape applied to the male threads only. Threaded joints up to 40 mm in diameter may be made with approved tetrafluoroethylene tape. Threaded joints up to 50 mm in diameter may be made with approved joint sealing compound. After cutting and before threading, pipe shall be reamed and burrs shall be removed. Caulking of threaded joints to stop or prevent leaks shall not be permitted.

3.5.2 Welded Metallic Joints

Beveling, alignment, heat treatment, and inspection of welds shall conform to ASME B31.2. Weld defects shall be removed and repairs made to the weld, or the weld joints shall be entirely removed and rewelded. After filler metal has been removed from its original package, it shall be protected or stored so that its characteristics or welding properties are not affected adversely. Electrodes that have been wetted or have lost any of their coating shall not be used.

3.5.3 Flared Metallic Tubing Joints

Flared joints in metallic tubing shall be made with special tools recommended by the tubing manufacturer. Flared joints shall be used only in systems constructed from nonferrous pipe and tubing, when experience or tests have demonstrated that the joint is suitable for the conditions, and when adequate provisions are made in the design to prevent separation of the joints. Metallic ball sleeve compression-type tubing fittings shall not be used for tubing joints.

3.5.4 Solder or Brazed Joints

Joints in metallic tubing and fittings shall be made with materials and procedures recommended by the tubing supplier. Joints shall be brazed with material having a melting point above 538 degrees C (1000 degrees F).

Brazing alloys shall not contain phosphorous.

3.6 PIPE SLEEVES

Pipes passing through concrete floors shall be provided with pipe sleeves fitted into place at the time of construction. Sleeves shall not be installed in structural members except where indicated or approved. Each sleeve shall extend through its respective floor shall be cut flush with each surface, except in mechanical room floors not located on grade where clamping flanges or riser pipe clamps are used. Sleeves in mechanical room floors above grade shall extend at least 100 mm above finish floor. Unless otherwise indicated, sleeves shall be large enough to provide a minimum clearance of 6.4 mm all around the pipe. Sleeves waterproofing membrane floors, and wet areas shall be steel pipe. Sleeves in floorsmay be steel pipe, galvanized sheet metal with lock-type longitudinal seam, or moisture-resistant fiber . For penetrations of floors which are not on grade, the annular space between the pipe and sleeve shall be sealed with firestopping material and sealant that meet the requirement of Section 07270 FIRESTOPPING.

3.7 PIPES PENETRATING WATERPROOFING MEMBRANES

Pipes penetrating waterproofing membranes shall be installed as specified in Section 15400 PLUMBING, GENERAL PURPOSE.

3.8 FIRE SEAL

Penetrations of fire rated partitions, walls and floors shall be in accordance with Section 07270 FIRESTOPPING.

3.9 ESCUTCHEONS

Escutcheons shall be provided for all finished surfaces where gas piping passes through floors, walls, or ceilings except in boiler, utility, or equipment rooms.

3.10 SPECIAL REQUIREMENTS

Drips, grading of the lines, freeze protection, and branch outlet locations shall be as shown and shall conform to the requirements of NFPA 54.

3.11 BUILDING STRUCTURE

Building structure shall not be weakened by the installation of any gas piping. Beams or joists shall not be cut or notched.

3.12 PIPING SYSTEM SUPPORTS

Gas piping systems in buildings shall be supported with pipe hooks, metal pipe straps, bands or hangers suitable for the size of piping or tubing. Gas piping system shall not be supported by other piping. Spacing of supports in gas piping and tubing installations shall conform to the requirements of NFPA 54. The selection and application of supports in gas piping and tubing installations shall conform to the requirements of MSS SP-69. In the support of multiple pipe runs on a common base member, a clip or clamp shall be used where each pipe crosses the base support member. Spacing of the base support members shall not exceed the hanger and support spacing required for any of the individual pipes in the multiple pipe run. The clips or clamps shall be rigidly connected to the

common base member. A clearance of 3.2 mm shall be provided between the pipe and clip or clamp for all piping which may be subjected to thermal expansion.

3.13 ELECTRICAL BONDING AND GROUNDING

A gas piping system within a building shall be electrically continuous and bonded to a grounding electrode as required by NFPA 70.

3.14 SHUTOFF VALVE

Main gas shutoff valve controlling the gas piping system shall be easily accessible for operation and shall be installed as indicated, protected from physical damage, and marked with a metal tag to clearly identify the piping system controlled.

3.15 TESTING

Before any section of a gas piping system is put into service, it shall be carefully tested to assure that it is gastight. Prior to testing, the system shall be blown out, cleaned and cleared of all foreign material. Each joint shall be tested by means of an approved gas detector, soap and water, or an equivalent nonflammable solution. Testing shall be completed before any work is covered, enclosed, or concealed. All testing of piping systems shall be done with due regard for the safety of employees and the public during the test. Bulkheads, anchorage and bracing suitably designed to resist test pressures shall be installed if necessary. Oxygen shall not be used as a testing medium.

3.15.1 Pressure Tests

Before appliances are connected, piping systems shall be filled with air or an inert gas and shall withstand a minimum pressure of 21 kPa (3 psi) gauge for a period of not less than 10 minutes as specified in NFPA 54 without showing any drop in pressure. Oxygen shall not be used. Pressure shall be measured with a mercury manometer, slope gauge, or an equivalent device so calibrated as to be read in increments of not greater than 1 kPa (0.1 pound). The source of pressure shall be isolated before the pressure tests are made.

3.15.2 Pressure Tests for Liquified Petroleum Gas

Systems shall withstand the pressure test described above. When appliances are connected to the piping system, fuel gas shall be used for testing and appliances shall withstand a pressure of not less than 2.5 kPa nor more than 3.5 kPa (10.0 inches nor more than 14.0 inches water column (8.0 ounces per square inch)) for a period of not less than 10 minutes without showing any drop in pressure. Pressure shall be measured with a water manometer or an equivalent device calibrated to be read in increments of not greater than 20 Pa (0.1 inch water column). The source of pressure shall be isolated before the pressure tests are made.

3.15.3 Test With Gas

Before turning gas under pressure into any piping, all openings from which gas can escape shall be closed. Immediately after turning on the gas, the piping system shall be checked for leakage by using a laboratory-certified gas meter, an appliance orifice, a manometer, or equivalent device. All testing shall conform to the requirements of NFPA 54. If leakage is

recorded, the gas supply shall be shut off, the leak shall be repaired, and the tests repeated until all leaks have been stopped.

3.15.4 Purging

After testing is completed, and before connecting any appliances, all gas piping shall be fully purged. LPG piping tested using fuel gas with appliances connected does not require purging. Piping shall not be purged into the combustion chamber of an appliance. The open end of piping systems being purged shall not discharge into confined spaces or areas where there are ignition sources unless the safety precautions recommended in NFPA 54 are followed.

3.15.5 Labor, Materials and Equipment

All labor, materials and equipment necessary for conducting the testing and purging shall be furnished by the Contractor.

-- End of Section --

SECTION TABLE OF CONTENTS

DIVISION 15 - MECHANICAL

SECTION 15565

HEATING SYSTEM; GAS-FIRED HEATERS

PART 1 GENERAL

1.1 REFERENCES
1.2 SUBMITTALS
1.3 GENERAL REQUIREMENTS
1.3.1 Nameplates
1.3.2 Equipment Guards
1.3.3 Verification of Dimensions
1.4 DELIVERY AND STORAGE

PART 2 PRODUCTS

2.1 STANDARD PRODUCTS
2.2 ELECTRICAL WORK
2.3 HEATERS
2.3.1 Unit Heaters
2.4 THERMOSTATS
2.5 VENT PIPING
2.6 ELECTRIC AUTOMATIC VENT DAMPERS
2.7 INSULATION
2.8 FACTORY FINISHES

PART 3 EXECUTION

3.1 INSTALLATION
3.1.1 Heating Equipment
3.1.2 Vents
3.1.3 Gas Piping
3.2 TESTING, ADJUSTING, AND BALANCING
3.3 Training

-- End of Section Table of Contents --

SECTION 15565

HEATING SYSTEM; GAS-FIRED HEATERS

PART 1 GENERAL

1.1 REFERENCES

The publications listed below form a part of this specification to the extent referenced. The publications are referred to in the text by basic designation only.

AMERICAN GAS ASSOCIATION LABORATORIES (AGAL)

AGAL-01	(1995; Supple Dec 95) Directory of Certified Appliances and Accessories

AMERICAN NATIONAL STANDARDS INSTITUTE (ANSI)

ANSI Z21.66	(1988; Z21.66a; Z21.66b) Automatic Vent Damper Devices for Use with Gas-Fired Appliances
ANSI Z83.8	(1990; Z83.8a; Z83.8b) Gas Unit Heaters

NATIONAL ELECTRICAL MANUFACTURERS ASSOCIATION (NEMA)

NEMA MG 1	(1993; Rev 1) Motors and Generators

NATIONAL FIRE PROTECTION ASSOCIATION (NFPA)

NFPA 54	(1992) National Fuel Gas Code
NFPA 211	(1992) Chimneys, Fireplaces, Vents, and Solid Fuel-Burning Appliances

UNDERWRITERS LABORATORIES (UL)

UL-06	(1995) Gas and Oil Equipment Directory

1.2 SUBMITTALS

Government approval is required for submittals with a "GA" designation; submittals having an "FIO" designation are for information only. The following shall be submitted in accordance with Section 01330 SUBMITTAL PROCEDURES:

SD-01 Data

Heating System; FIO.

Spare parts data for each different item of materials and equipment specified, after approval of the detail drawings, and not later than _____ months prior to the date of beneficial occupancy. The data shall include a

complete list of parts and supplies, with current unit prices and source of supply.

SD-04 Drawings

Heating System; FIO.

Detail drawings consisting of illustrations, schedules, performance charts, instructions, brochures, diagrams, and other information to illustrate the requirements and operation of the system. Detail drawings for space heating equipment, controls, associated equipment, and for piping and wiring. Drawings shall show proposed layout and anchorage of equipment and appurtenances, and equipment relationship to other parts of the work including clearances for maintenance and operation.

SD-06 Instructions

Heating System; FIO.

Six _____ complete copies of operating instructions outlining the step-by-step procedures required for system startup, operation and shutdown. The instructions shall include the manufacturer's name, model number, service manual, parts list, and brief description of all equipment and basic operating features. Six _____ complete copies of maintenance instructions listing routine maintenance, possible breakdowns, repairs and troubleshooting guide. The instructions shall include simplified piping, wiring, and control diagrams for the system as installed.

SD-09 Reports

Testing, Adjusting, and Balancing; FIO.

Test reports shall be submitted in booklet form showing all field tests performed to adjust each component and all field tests performed to prove compliance with the specified performance criteria, upon completion and testing of the installed system. Each test report shall indicate the final position of controls.

1.3 GENERAL REQUIREMENTS

1.3.1 Nameplates

Each major component of equipment shall have the manufacturer's name, address, type or style, model or serial number, and catalog number on a plate secured to the equipment.

1.3.2 Equipment Guards

Belts, pulleys, chains, gears, couplings, projecting setscrews, keys, and other rotating parts so located that any person may come in close proximity thereto shall be completely enclosed or guarded. High-temperature equipment and piping so located as to endanger personnel or create a fire hazard shall be guarded or covered with insulation of type specified for service.

1.3.3 Verification of Dimensions

The Contractor shall become thoroughly familiar with all details of the work, verify all dimensions in the field, and shall advise the Contracting

Officer of any discrepancy before performing any work.

1.4 DELIVERY AND STORAGE

All equipment delivered and placed in storage shall be stored with protection from weather, humidity and temperature variations, dirt and dust, or other contaminants.

PART 2 PRODUCTS

2.1 STANDARD PRODUCTS

Material and equipment shall be standard products of a manufacturer regularly engaged in manufacturing of the products. Equipment shall essentially duplicate equipment that has been in satisfactory use at least 2 years prior to bid opening.

2.2 ELECTRICAL WORK

Electrical motor driven equipment shall be provided complete with motors, motor starters, and controls. Motors shall conform to NEMA MG 1. Electrical equipment and wiring shall be in accordance with Section 16415 ELECTRICAL WORK, INTERIOR. Electrical characteristics shall be as specified or indicated. Unless otherwise indicated motors of 745.7 W (1 Hp) and above shall be high efficiency type. Motor starters shall be provided complete with thermal overload protection and other appurtenances necessary for the motor control specified. Each motor shall be of sufficient size to drive the equipment at the specified capacity without exceeding the nameplate rating of the motor. Manual or automatic control and protective or signal devices required for the operation specified and any control wiring required for controls and devices specified, but not shown, shall be provided.

2.3 HEATERS

Heaters shall be equipped for and adjusted to burn liquified petroleum gas. Each heater shall be provided with a gas pressure regulator that will satisfactorily limit the main gas burner supply pressure. Heaters shall have an intermittent or interrupted electrically ignited pilot or a direct electric ignition system. Safety controls shall conform to the ANSI standard specified for each heater. Mounting brackets and hardware shall be furnished by the heater manufacturer and shall be factory finished to match the supported equipment.

2.3.1 Unit Heaters

Heaters shall conform to requirements of ANSI Z83.8. Heat exchangers shall be aluminum clad steel or stainless steel. Air discharge section shall be equipped with adjustable horizontal louvers. Heater fan motors shall operate at a speed not in excess of 1,550 rpm for units with output capacities up to and including 17.6 kW (60,000 Btuh) and not in excess of 1,200 rpm for units with capacities above 17.6 kW (60,000 Btuh). Fan shafts shall be either directly connected to the driving motor, or indirectly connected by multiple V-belt drive. Fans in one unit shall be of the same size. Heaters shall be power-vented type, suitable for sidewall vent discharge and single-wall-thickness vent piping. Heaters shall have automatic ignition. Heaters shall employ metered combustion air with enclosed draft diverter (no open flue collar). Heaters shall have

minimum steady state efficiencies of 80 percent at maximum rated capacity and 75 percent at minimum rated capacity that is provided and allowed by the controls. Heaters shall be provided with a space thermostat which controls both unit's fan and burner.

2.4 THERMOSTATS

Thermostats shall be the adjustable electric or electronic type. Control wiring required to complete the space temperature control system shall be included. Thermostats shall have a 2 degree C (3 degree F) differential and a set point range of 4 to 24 degree C (40 to 75 degrees F) 27 to 49 degrees C (80 to 120 degrees F) . Thermostats shall be the single stage type.

2.5 VENT PIPING

Vent piping shall conform to the requirements of NFPA 54.

2.6 ELECTRIC AUTOMATIC VENT DAMPERS

Electric automatic vent dampers shall conform to the requirements of ANSI Z21.66 and shall be provided in the vents of heaters using indoor air for combustion air.

2.7 INSULATION

Insulation for piping and equipment and application shall be in accordance with Section 15250 THERMAL INSULATION FOR MECHANICAL SYSTEMS.

2.8 FACTORY FINISHES

Equipment and component items, when fabricated from ferrous metal, shall be factory finished with the manufacturer's standard finish.

PART 3 EXECUTION

3.1 INSTALLATION

Equipment shall be installed as indicated and in accordance with the recommendations of the equipment manufacturer and the listing agency, except as otherwise specified.

3.1.1 Heating Equipment

Heaters shall be installed with clearance to combustibles complying with minimum distances as determined by AGAL-01, UL-06 and as indicated on each heater approval and listing plate. Heaters shall be independently supported from the building structure as indicated and shall not rely on support from suspended ceiling systems.

3.1.2 Vents

Vent dampers, piping and structural penetrations shall be located as indicated. Vent damper installation shall conform to ANSI Z21.66. Vent pipes, where not connected to a masonry chimney conforming to NFPA 211, shall extend through the roof or an outside wall and shall terminate, in compliance with NFPA 54. Vents passing through waterproof membranes shall

be provided with the necessary flashings to obtain waterproof installations.

3.1.3 Gas Piping

Gas piping shall be connected as indicated and shall comply with the applicable requirements at Section 15488 GAS PIPING SYSTEMS.

3.2 TESTING, ADJUSTING, AND BALANCING

Testing, adjusting, and balancing shall be as specified in Section 15990 TESTING, ADJUSTING, AND BALANCING OF HVAC SYSTEMS.

3.3 Training

The Contractor shall conduct a training course for the maintenance and operating staff. The training period of 2 hours normal working time shall start after the system is functionally complete but before the final acceptance tests. The training shall include all of the items contained in the operating and maintenance instructions as well as demonstrations of routine maintenance operations. The Contracting Officer shall be given at least two weeks advance notice of such training.

-- End of Section --

SECTION TABLE OF CONTENTS

DIVISION 15 - MECHANICAL

SECTION 15566

WARM AIR HEATING SYSTEMS

PART 1 GENERAL

1.1 REFERENCES
1.2 GENERAL REQUIREMENTS
1.2.1 Standard Products
1.2.2 Nameplates
1.2.3 Verification of Dimensions
1.2.4 SUBMITTALS
1.3 DELIVERY AND STORAGE
1.4 ELECTRICAL WORK

PART 2 PRODUCTS

2.1 CONVENTIONAL FURNACE
2.2 FURNACE COMPONENTS
2.2.1 Gas-Burning Components
2.2.2 Ignition Systems
2.2.2.1 Gas-Fired Units
2.2.3 Supply Blowers
2.2.4 Vents for Conventional furnaces
2.2.4.1 Gas-Fired Units
2.3 AIR CONDITIONING EQUIPMENT
2.4 CONTROLS
2.5 AIR FILTERS
2.5.1 Replaceable Media filters
2.6 FUEL-GAS SUPPLY SYSTEM
2.7 FACTORY PAINTING

PART 3 EXECUTION

3.1 INSTALLATION
3.1.1 Furnaces
3.1.2 Automatic Vent Dampers
3.1.3 Air Filters
3.2 FIELD PAINTING
3.3 CLEANING
3.4 TESTS
3.4.1 Testing, Adjusting, and Balancing
3.4.2 Performance Tests
3.5 FIELD TRAINING

-- End of Section Table of Contents --

SECTION 15566

WARM AIR HEATING SYSTEMS

PART 1 GENERAL

1.1 REFERENCES

The publications listed below form a part of this specification to the extent referenced. The publications are referred to in the text by basic designation only.

AMERICAN GAS ASSOCIATION LABORATORIES (AGAL)

AGAL-01	(Jan 1995; Supple Feb 95) Directory of Certified Appliances and Accessories

AMERICAN NATIONAL STANDARDS INSTITUTE (ANSI)

ANSI Z21.47	(1990) Gas-Fired Central Furnaces
ANSI Z21.66	(1988; Z21.66a; Z21.66b) Automatic Vent Damper Devices for Use with Gas-Fired Appliances

AMERICAN SOCIETY FOR TESTING AND MATERIALS (ASTM)

ASTM A 123	(1989a) Zinc (Hot-Dip Galvanized) Coatings on Iron and Steel Products
ASTM A 653	(1994) Steel Sheet, Zinc-Coated (Galvanized) or Zinc-Iron Alloy-Coated (Galvannealed) by the Hot-Dip Process
ASTM B 117	(1994) Operating Salt Spray (Fog) Testing Apparatus
ASTM D 520	(1984; R 1989) Zinc Dust Pigment
ASTM D 1654	(1992) Evaluation of Painted or Coated Specimens Subjected to Corrosive Environments
ASTM D 3359	(1993) Measuring Adhesion by Tape Test

NATIONAL ELECTRICAL MANUFACTURERS ASSOCIATION (NEMA)

NEMA MG 1	(1993) Motors and Generators

NATIONAL FIRE PROTECTION ASSOCIATION (NFPA)

NFPA 54	(1992) National Fuel Gas Code
NFPA 90A	(1993) Installation of Air Conditioning and Ventilating Systems

NFPA 90B	(1993) Warm Air Heating and Air Conditioning Systems
NFPA 211	(1992) Chimneys, Fireplaces, Vents, and Solid Fuel-Burning Appliances

UNDERWRITERS LABORATORIES (UL)

UL 441	(1994) Gas Vents
UL 900	(1994) Test Performance of Air Filter Units

1.2 GENERAL REQUIREMENTS

1.2.1 Standard Products

Material and equipment shall be the standard product of a manufacturer regularly engaged in the manufacture of the products. Equipment shall essentially duplicate equipment that has been in satisfactory use at least 2 years prior to bid opening.

1.2.2 Nameplates

Each major component of equipment shall have the manufacturer's name, address, type or style, model or serial number, and catalog number on a plate secured to the equipment.

1.2.3 Verification of Dimensions

The Contractor shall become familiar with all details of the work and working conditions, verify all dimensions in the field and shall advise the Contracting Officer of any discrepancy before performing any work.

1.2.4 SUBMITTALS

Government approval is required for submittals with a "GA" designation; submittals having an "FIO" designation are for information only. The following shall be submitted in accordance with Section 01300 SUBMITTAL PROCEDURES:

SD-01 Data

Heating Equipment; FIO.

Spare parts data for each different item of material and equipment specified, after approval of detail drawings and not later than 6 months prior to the date of beneficial occupancy. The data shall include a complete list of parts and supplies, with current unit prices and source of supply, a recommended spare parts list for 12 months operation, and a list of the parts recommended by the manufacturer to be replaced after 1 and 3 year(s) of service.

SD-04 Drawings

Heating Equipment; FIO.

Drawings shall consist of a complete list of equipment and material

including manufacturer's descriptive and technical literature, catalog cuts, and installation instructions. Drawings shall contain complete equipment wiring diagrams, and any other details required to demonstrate that the system has been coordinated and will properly function as a unit. Drawings shall show proposed layout and anchorage of equipment and appurtenance and equipment relationship to other parts of the work including clearances required for maintenance and operation.

SD-06 Instructions

Tests; FIO.

Proposed test procedures for ductwork leak and performance tests, at least 2 weeks prior to the start of related testing.

System Diagrams; FIO.

Proposed diagrams, at least 2 weeks prior to start of related testing. System diagrams that show the layout of equipment and ductwork, and typed condensed operation manuals explaining preventative maintenance procedures, methods of checking the system for normal safe operation, and procedures for safely starting and stopping the system shall be framed under glass or laminated plastic. After approval, these items shall be posted where directed.

SD-07 Schedules

Tests; FIO.

Proposed test schedules for ductwork leak test and performance tests, at least 2 weeks prior to the start of related testing.

Field Training; FIO.

Proposed schedule for field training, at least 2 weeks prior to the start of related training.

SD-08 Statements

Similar Services; FIO.

Statement demonstrating successful completion of similar services on at least 5 projects of similar size and scope, at least 2 weeks prior to submittal of other items required by this section.

SD-09 Reports

Tests; FIO.

Test reports for the ductwork leak test and the performance tests in booklet form, upon completion of testing. Reports shall document phases of tests performed including initial test summary, repairs/adjustments made, and final test results.

SD-19 Operation and Maintenance Manuals

Heating Equipment; FIO.

Six _____ manuals listing step-by-step procedures required for system

startup, operation, shutdown and routine maintenance, at least 2 weeks prior to field training. The manuals shall include the manufacturer's name, model number, parts list, list of parts and tool that should be kept in stock by the owner for routine maintenance including the name of a local supplier, simplified wiring and controls diagrams, troubleshooting guide, and recommended service organization (including address and telephone number) for each item of equipment. Each service organization submitted shall be capable of providing 4 _____ hour onsite response to a service call on an emergency basis.

1.3 DELIVERY AND STORAGE

Equipment delivered and placed in storage shall be stored with protection from the weather, humidity and temperature variations, dirt and dust, or other contaminants.

1.4 ELECTRICAL WORK

Electrical motor-driven equipment specified shall be provided complete with motor, motor starter, and controls. Unless otherwise specified, electric equipment, including wiring and motor efficiencies, shall be in accordance with Section 16415 ELECTRICAL WORK, INTERIOR. Electrical characteristics and enclosure type shall be as shown. Unless otherwise indicated, motors of 746 W (1 hp) and above shall be high efficiency type. Motor starters shall be provided complete with thermal overload protection and other appurtenances necessary. Each motor shall be in accordance with NEMA MG 1 and shall be of sufficient size to drive the equipment at the specified capacity without exceeding the nameplate rating of the motor. Manual or automatic control and protective or signal devices required for the operation specified, and any control wiring required for controls and devices, but not shown, shall be provided. Where two-speed are indicated, solid-state variable-speed controller may be provided to accomplish the same function. Solid-state variable-speed controllers shall be utilized for motors rated 7.45 kW (10 hp) or less. Adjustable frequency drives shall be used for larger motors.

PART 2 PRODUCTS

2.1 CONVENTIONAL FURNACE

Unit shall be a self-contained, forced circulated, air heating type furnace as indicated. Unit and all corresponding components shall be Type I, Style A or B, Group 1, and burner type LPG , except as amended herein. Gas-fired furnaces shall be in accordance with ANSI Z21.47.

2.2 FURNACE COMPONENTS

2.2.1 Gas-Burning Components

Gas-burning equipment shall include the gas burners, ignition equipment, gas-control valve, gas piping, gas-pressure regulating valve, when applicable, and accessories necessary for a fully automatic system that is listed in AGAL-01. Gas-fired units equipped with programming controls shall be furnished both with high and with low gas supply pressure switches in the fuel supply piping.

2.2.2 Ignition Systems

2.2.2.1 Gas-Fired Units

Ignition systems shall be of the direct spark, hot surface, or interrupted intermittent type with automatic electric ignition. The pilots shall be of the electrically-ignited proven type. Continuous pilots will not be permitted. Burner shall be designed in accordance with NFPA 54 and located so that parts are protected against overheating. Provisions shall be made in the burner housing for inspection of the pilot flame.

2.2.3 Supply Blowers

Blowers shall be centrifugal type. Blowers shall be statically and dynamically balanced. Lubrication points shall be located or extended, as required, to provide ready access for periodic lubrication. The direction of rotation shall be clearly and permanently marked on each blower housing. Blower speeds shall be single, or multispeed, as indicated, to provide the specified range of air temperature rises. Direct-drive blowers may have multiple speed motors to change blower speed. Belt-drive blowers shall be provided with an adjustable base and guard or enclosed in the unit casing. The belt drive shall be designed in accordance with the applicable Rubber Manufacturer's Association (RMA) power transmission belt specifications, with a service factor of at least 1.2. Shafts shall be supported by a minimum of two self-alining bearings. Blower speed shall be adjusted by the use of variable pitch drive sheaves.

2.2.4 Vents for Conventional furnaces

A 8 mm diameter hole shall be provided in the vent stack not greater than 152 mm (6 inches) from the furnace flue outlet for sampling of the exit gases. A method shall be provided to seal the hole to prevent exhaust gases from entering the indoor space when samples are not being taken. Each exhaust stack shall be provided complete with bird screen and rain hood.

2.2.4.1 Gas-Fired Units

Vent piping shall be in accordance with UL 441, Type B or Type BW. Vent shall conform to NFPA 211 and NFPA 54.

2.3 AIR CONDITIONING EQUIPMENT

Cooling coils, condensers and related equipment shall be as specified in Section 15653 AIR-CONDITIONING SYSTEM (UNITARY TYPE).

2.4 CONTROLS

Controls shall be per drawings.

2.5 AIR FILTERS

Air Filters shall be listed in accordance with requirements of UL 900.

2.5.1 Replaceable Media filters

Replaceable media filters shall be the dry-media orviscous adhesive type, of the size required to suit the application. Filtering media shall be not less than 50 mm (2 inches) thick fibrous glass media pad supported by a structural wire grid or woven wire mesh. Pad shall be enclosed in a holding frame of not less than 1.6 mm (16 gauge) galvanized steel, and equipped with quick-opening mechanism for changing filter media. The air flow capacity of the filter shall be based on net filter face velocity not

exceeding [1.5] [_____] m/s ([300] [_____] feet per minute), with initial resistance of [32] [_____] Pa ([0.13] [_____] inches water gauge).

2.6 FUEL-GAS SUPPLY SYSTEM

Fuel-gas supply system shall be as specified in Section 15488 GAS PIPING SYSTEMS and Section 02685 GAS DISTRIBUTION SYSTEM.

2.7 FACTORY PAINTING

Units which are not of galvanized construction according to ASTM A 123or ASTM A 653 shall be factory painted with a corrosion resisting paint finish. Internal and external ferrous metal surfaces shall be cleaned, phosphated and coated with a paint finish which has been tested according to ASTM B 117, ASTM D 1654, and ASTM D 3359. Evidence of satisfactory paint performance for a minimum of 125 hours for units to be installed indoors and 500 hours for units to be installed outdoors shall be submitted. Rating of failure at the scribe mark shall be not less than 6, average creepage not greater than 10, no failure. On units constructed of galvanized steel which have been welded, exterior surfaces of welds or welds that have burned through from the interior shall receive a final shop docket of zinc-rich protective paint in accordance with ASTM D 520, Type I.

PART 3 EXECUTION

3.1 INSTALLATION

The warm air heating installation shall conform to the requirements contained in NFPA 90A or NFPA 90B, as applicable. Combustion air supply and ventilation shall be in accordance with or NFPA 54.

3.1.1 Furnaces

Foundations, settings, or suspensions for mounting equipment and accessories including supports, vibration isolators, stands, guides, anchors, clamps, and brackets shall be provided. Foundations and suspension for equipment shall conform to the recommendations of the manufacturer, unless otherwise indicated on drawings. Anchor bolts and sleeves shall be set accurately using properly constructed templates. Anchor bolts, when embedded in concrete, shall be provided with welded-on plates on the head end and guarded against damage until equipment is installed. Equipment bases shall be leveled, using jacks or steel wedges, and when resting on concrete shall be neatly grouted-in with a nonshrinking type of grout. Equipment shall be located as indicated and in such a manner that working space is available for all necessary servicing, such as shaft removal, replacing, or adjusting drives, motors, or shaft seals, air filters, access to automatic controls,, and lubrication. Electrical isolation shall be provided between dissimilar metals for the purpose of minimizing galvanic corrosion. The interior of cabinets or casings shall be cleaned before completion of installation. The furnace shall be connected to the vent or with the specified connectors, draft regulators, draft loads, and induced draft fans, as applicable, in accordance with NFPA 211.

3.1.2 Automatic Vent Dampers

Automatic vent dampers shall be installed in accordance with ANSI Z21.66.

3.1.3 Air Filters

Air filters shall be installed in return air ducts at furnaces. Fans or blowers shall not be operated until filters are installed. After completion of tests and before the building is accepted by the Government, the Contractor shall furnish a new second set of replaceable filters, where utilized.

3.2 FIELD PAINTING

Finish painting of items only primed at the factory or surfaces not specifically noted, otherwise are specified in Section 09900 PAINTING, GENERAL.

3.3 CLEANING

Ducts, plenums, and casings shall be thoroughly cleaned of all debris and blown free of all small particles of rubbish and dust and then shall be vacuum cleaned before installing outlet faces. Equipment shall be wiped clean, with all traces of oil, dust, dirt, or paint spots removed. Temporary filters shall be provided prior to startup of all fans that are operated during construction, and new filters shall be installed after all construction dirt has been removed from the building, and the ducts, plenums, casings, and other items specified have been vacuum cleaned. System shall be maintained in this clean condition until final acceptance. Bearings shall be properly lubricated with oil or grease as recommended by the manufacturer. Belts shall be tightened to proper tension. All equipment requiring adjustment shall be adjusted to setting indicated or directed. Fans shall be adjusted to the speed indicated by the manufacturer to meet specified conditions.

3.4 TESTS

Upon completion and prior to acceptance of the installation, the Contractor shall furnish all equipment, instruments, materials, labor, and supervision required for the tests as specified. Water, electricity, and fuel required for testing shall will be furnished by the Government. Defects disclosed by the tests shall be rectified. Tests shall be made under the direction and subject to the approval of the Contracting Officer. All indicating instruments shall be read at 1/2-hour intervals unless otherwise directed by the Contracting Officer.

3.4.1 Testing, Adjusting, and Balancing

Testing, adjusting, and balancing shall be as specified in SECTION 15990 TESTING, ADJUSTING, AND BALANCING OF HVAC SYSTEMS. Testing, adjusting, and balancing shall begin only when the air supply and distribution, including controls, has been completed, with the exception of performance tests.

3.4.2 Performance Tests

After testing, adjusting, and balancing has been completed as specified, each system shall be tested as a whole to see all items perform as integral parts of the system and temperatures and conditions are evenly controlled throughout the building. Corrections and adjustments shall be conducted by an experienced engineer. Tests shall cover a period of not less than _1____ days for each system and shall demonstrate that the entire system is functioning according to the specifications. Coincidental chart recordings shall be made at points indicated on the drawings for the duration of the time period and shall record the temperature at space thermostats or space

sensors, the humidity in a shaded and weather protected area.

3.5 FIELD TRAINING

The Contractor shall conduct a training course for operating and maintenance personnel as designated by the Contracting Officer. Training shall be provided for a period of 4 hours of normal working time shall start after the system is functionally complete but prior to the performance tests. The field instruction shall cover all of the items contained in the approved operating and maintenance instructions.

-- End of Section --

SECTION TABLE OF CONTENTS

DIVISION 15 - MECHANICAL

SECTION 15653

AIR-CONDITIONING SYSTEM (UNITARY TYPE)

PART 1 GENERAL

1.1 REFERENCES
1.2 SUBMITTALS
1.3 QUALIFICATIONS
1.4 DELIVERY, STORAGE, AND HANDLING
1.5 PROJECT/SITE CONDITIONS
1.5.1 Verification of Dimensions
1.5.2 Drawings

PART 2 PRODUCTS

2.1 STANDARD PRODUCTS
2.2 NAMEPLATES
2.3 ELECTRICAL WORK
2.4 UNITARY EQUIPMENT, SPLIT SYSTEM
2.4.1 Air-to-Refrigerant Coil
2.4.2 Refrigeration Circuit
2.4.3 Unit Controls
2.5 EQUIPMENT EFFICIENCY
2.6 CONDENSING UNIT
2.6.1 Condensing Coil
2.6.1.1 Unit Controls
2.6.2 Compressor
2.7 SYSTEM COMPONENTS
2.7.1 Refrigerant and Oil
2.8 TEMPERATURE CONTROLS
2.9 DUCTWORK COMPONENTS
2.9.1 Metal Ductwork
2.9.1.1 Transitions
2.9.1.2 Metallic Flexible Duct
2.9.1.3 Insulated Nonmetallic Flexible Duct Runouts
2.9.1.4 General Service Duct Connectors
2.9.2 Ductwork Insulation
2.9.3 Ductwork Accessories
2.9.3.1 Duct Access Doors
2.9.3.2 Splitters and Manual Balancing Dampers
2.9.3.3 Air Deflectors and Branch Connections
2.9.4 Duct Sleeves, Framed Prepared Openings, Closure Collars
2.9.4.1 Duct Sleeves
2.9.4.2 Framed Prepared Openings
2.9.4.3 Closure Collars
2.9.5 Diffusers, Registers, and Grilles
2.9.5.1 Diffusers
2.9.5.2 Registers and Grilles
2.9.6 Louvers

2.10 REFRIGERANT PIPING
2.10.1 Steel Pipe
2.10.2 Joints and Fittings, Steel Pipe
2.10.3 Steel Tubing
2.10.4 Joints and Fittings, Steel Tubing
2.10.5 Copper Tubing
2.10.6 Joints and Fittings, Copper Tubing
2.10.7 Valves
2.10.7.1 Refrigerant-Stop Valves
2.10.8 Accessories
2.10.9 Filter Driers
2.10.9.1 Sight Glass and Liquid Level Indicator
2.10.9.2 Brazing Materials
2.11 DRAIN AND MISCELLANEOUS PIPING
2.12 FABRICATION
2.12.1 Factory Coating
2.12.2 Field Painting

PART 3 EXECUTION

3.1 INSTALLATION
3.1.1 Equipment
3.1.2 Building Surface Penetrations
3.1.2.1 General Service Areas
3.1.2.2 Waterproof Penetrations
3.1.2.3 Fire-Rated Penetrations
3.1.2.4 Escutcheons
3.1.3 Access Panels
3.1.4 General Piping Installation
3.1.4.1 Brazed Joints
3.1.4.2 Threaded Joints
3.1.4.3 Flared Connections
3.1.5 Refrigeration Piping
3.1.5.1 Directional Changes
3.1.5.2 Functional Requirements
3.1.5.3 Manual Valves
3.1.5.4 Valve Identification
3.1.6 Piping Supports
3.1.6.1 Seismic Requirements
3.1.6.2 Structural Attachments
3.1.7 Pipe Hangers, Inserts, and Supports
3.1.7.1 Hangers
3.1.7.2 Inserts
3.1.7.3 C-Clamps
3.1.7.4 Angle Attachments
3.1.7.5 Saddles and Shields
3.1.7.6 Horizontal Pipe Supports
3.1.7.7 Vertical Pipe Supports
3.1.8 Piping Identification
3.1.9 Metal Ductwork
3.1.10 Field Applied Insulation
3.1.11 Factory Applied Insulation
3.1.12 Framed Instructions
3.2 TESTS
3.2.1 Refrigerant System
3.2.1.1 Preliminary Procedures
3.2.1.2 Pneumatic Test
3.2.1.3 Evacuation Test
3.2.1.4 System Charging and Startup Test

3.2.1.5 Refrigerant Leakage
3.2.1.6 Contractor's Responsibility
3.3 CLEANING AND ADJUSTING
3.3.1 Piping
3.3.2 Ductwork
3.3.3 Equipment
3.3.4 Testing, Adjusting, and Balancing
3.4 DEMONSTRATIONS

-- End of Section Table of Contents --

SECTION 15653

AIR-CONDITIONING SYSTEM (UNITARY TYPE)

PART 1 GENERAL

1.1 REFERENCES

The publications listed below form a part of this specification to the extent referenced. The publications are referred to in the text by basic designation only.

AIR CONDITIONING AND REFRIGERATION INSTITUTE (ARI)

ARI 210/240	(1989) Unitary Air-Conditioning and Air-Source Heat Pump Equipment
ARI 325	(1993) Ground Water-Source Heat Pumps
ARI 700	(1993) Specifications for Fluorocarbon and Other Refrigerants
ARI 710	(1986) Liquid-Line Driers

AIR DIFFUSION COUNCIL (ADC)

ADC 1062:GRD	(1984) Test Codes for Grilles, Registers and Diffusers

AIR MOVEMENT AND CONTROL ASSOCIATION (AMCA)

AMCA 500	(1989) Test Methods for Louvers, Dampers and Shutters

AMERICAN NATIONAL STANDARDS INSTITUTE (ANSI)

ANSI A13.1	(1981; R 1993) Scheme for the Identification of Piping Systems

AMERICAN SOCIETY FOR TESTING AND MATERIALS (ASTM)

ASTM A 53	(1995a) Pipe, Steel, Black and Hot-Dipped, Zinc-Coated Welded and Seamless
ASTM A 334	(1991) Seamless and Welded Carbon and Alloy-Steel Tubes for Low-Temperature Service
ASTM A 653	(1995) Steel Sheet, Zinc-Coated (Galvanized) or Zinc-Iron Alloy-Coated (Galvannealed) by the Hot-Dip Process
ASTM B 117	(1994) Operating Salt Spray (Fog) Testing Apparatus

ASTM B 280	(1993a) Seamless Copper Tube for Air Conditioning and Refrigeration Field Service
ASTM D 520	(1984; R 1989) Zinc Dust Pigment
ASTM D 3308	(1991a) PTFE Resin Skived Tape

AMERICAN SOCIETY OF HEATING, REFRIGERATING AND AIR-CONDITIONING ENGINEERS (ASHRAE)

ASHRAE 15	(1994) Safety Code for Mechanical Refrigeration
ASHRAE 34	(1994) Number Designation and Safety Classification of Refrigerants

AMERICAN SOCIETY OF MECHANICAL ENGINEERS (ASME)

ASME B1.20.1	(1983; R 1992) Pipe Threads, General Purpose (Inch)
ASME B31.1	(1992; B31.1a; B31.1b; B31.1c) Power Piping
ASME B31.5	(1992; B31.5a) Refrigeration Piping
ASME BPV VIII Div 1	(1995; Addenda Dec 1995) Boiler and Pressure Vessel Code; Section VIII, Pressure Vessels Division 1 - Basic Coverage
ASME BPV IX	(1995; Addenda Dec 1995) Boiler and Pressure Vessel Code; Section IX, Welding and Brazing Qualifications

AMERICAN WELDING SOCIETY (AWS)

AWS-01	(1991) Brazing Handbook
AWS A5.8	(1992) Filler Metals for Brazing and Braze Welding

MANUFACTURERS STANDARDIZATION SOCIETY OF THE VALVE AND FITTINGS INDUSTRY (MSS)

MSS SP-58	(1993) Pipe Hangers and Supports - Materials, Design and Manufacture
MSS SP-69	(1991) Pipe Hangers and Supports - Selection and Application

NATIONAL ELECTRICAL MANUFACTURERS ASSOCIATION (NEMA)

NEMA ICS 6	(1993) Enclosures for Industrial Control and Systems
NEMA MG 1	(1993; Rev 1-1993) Motors and Generators

NEMA MG 2	(1989; Rev 1) Safety Standard for Construction and Guide for Selection, Installation, and Use of Electric Motors and Generators

NATIONAL FIRE PROTECTION ASSOCIATION (NFPA)

NFPA 70	(1996) National Electrical Code
NFPA 90A	(1993) Installation of Air Conditioning and Ventilating Systems

SHEET METAL AND AIR CONDITIONING CONTRACTORS NATIONAL ASSOCIATION (SMACNA)

SMACNA-06	(1995) HVAC Duct Construction Standards - Metal and Flexible

UNDERWRITERS LABORATORIES (UL)

UL-01	(1996; Supple) Building Materials Directory
UL-03	(1996) Electrical Construction Materials Directory
UL 181	(1996; Rev Oct 1996) Factory-Made Air Ducts and Air Connectors
UL 214	(1993) Tests for Flame-Propagation of Fabrics and Films
UL 1995	(1995) Heating and Cooling Equipment

1.2 SUBMITTALS

Government approval is required for submittals with a "GA" designation; submittals having an "FIO" designation are for information only. The following shall be submitted in accordance with Section 01330 SUBMITTAL PROCEDURES:

SD-01 Data

Air-Conditioning System; FIO___.

Manufacturer's standard catalog data, prior to the purchase or installation of a particular component, shall be highlighted to show brand name, model number, size, options, performance charts and curves, etc. in sufficient detail to demonstrate compliance with contract requirements. Data shall be submitted for each specified component. Data shall include manufacturer's recommended installation instructions and procedures. If vibration isolation is specified for a unit, vibration isolator literature shall be included containing catalog cuts and certification that the isolation characteristics of the isolators provided meet the manufacturer's recommendations.

Spare Parts Data; FIO_____.

Spare parts data for each different item of equipment specified, after approval of detail drawings and not later than 6_____ months prior to the date of beneficial occupancy. The data shall include a complete list of parts and supplies, with current unit prices and source of supply, a recommended spare parts list for 1 year of operation, and a list of the parts recommended by the manufacturer to be replaced on a routine basis.

SD-04 Drawings

Air-Conditioning System; FIO.

Drawings shall provide adequate detail to demonstrate compliance with contract requirements. Drawings shall consist of:

(1) Equipment layouts which identify assembly and installation details.

(2) Piping layouts which identify valves and fittings.

(3) Plans and elevations which identify clearances required for maintenance and operation.

(4) Wiring diagrams which identify each component individually and interconnected or interlocked relationships between components.

(5) Foundation drawings, bolt-setting information, and foundation bolts prior to concrete foundation construction for equipment indicated or required to have concrete foundations.

(6) Details, if piping and equipment are to be supported other than as indicated, which include loadings and type of frames, brackets, stanchions, or other supports.

(7) Automatic temperature control diagrams and control sequences.

(8) Installation details which includes the amount of factory set superheat and corresponding refrigerant pressure/temperature.

SD-06 Instructions

Framed Instructions; FIO.

Framed instructions for posting, at least 2 weeks prior to construction completion.

SD-07 Schedules

Tests; FIO.

A letter, at least 10 _____ working days in advance of each tests, advising the Contracting Officer of the test. Individual letters shall be submitted for the condenser water system, refrigerant system, ductwork leak tests, cooling tower tests, condenser water quality tests, and the system performance tests. Each letter shall identify the date, time, and location for each test.

Demonstrations; FIO.

A letter, at least 14 working days prior to the date of the proposed training course, which identifies the date, time, and location for the training.

SD-08 Statements

Qualifications; FIO.

A letter listing the qualifying procedures for each welder. The letter shall include supporting data such as test procedures used, what was tested etc., and a list of the names of qualified welders and their identification symbols.

Verification of Dimensions; FIO.

A letter, at least 2 weeks prior to beginning construction, including the date the site was visited, conformation of existing conditions, and any discrepancies found.

SD-09 Reports

Tests; FIO.

Six _____ copies of each test containing the information described below in bound 216 by 279 mm (8-1/2 by 11 inch) booklets. Individual reports shall be submitted for the refrigerant systemand ductwork leak tests.

(1) The date the tests were performed.

(2) A list of equipment used, with calibration certifications.

(3) Initial test summaries.

(4) Repairs/adjustments performed.

(5) Final test results.

System Performance Tests; FIO.

Six _____ copies of the report shall be provided in bound 216 by 279 mm (8-1/2 by 11 inch) booklets. The report shall document compliance with the specified performance criteria upon completion and testing of the system. The report shall indicate the number of days covered by the tests and any conclusions as to the adequacy of the system. The report shall also include the following information and shall be taken at least three different times at outside dry-bulb temperatures that are at least 3 degrees C apart:

(1) Date and outside weather conditions.

(2) The load on the system based on the following:
    (a) The refrigerant used in the system.
    (b) Condensing temperature and pressure.
    (c) Suction temperature and pressure.

(d) Ambient, condensing and coolant temperatures
(e) Running current, voltage and proper phase sequence for each phase of all motors.

(3) The actual on-site setting of operating and safety controls.

(4) Thermostatic expansion valve superheat - value as determined by field test

(5) Subcooling

(6) High and low refrigerant temperature switch set-points

(7) Low oil pressure switch set-point

(9) Moisture content

(10) Capacity control set-points

(11) Field data and adjustments which affect unit performance and energy consumption.

(12) Field adjustments and settings which were not permanently marked as an integral part of a device.

SD-13 Certificates

Air-Conditioning System; FIO_____.

Where the system, components, or equipment are specified to comply with requirements of ARI, ASHRAE, ASME, or UL, proof of such compliance shall be provided. The label or listing of the specified agency shall be acceptable evidence. In lieu of the label or listing, a written certificate from an approved, nationally recognized testing organization equipped to perform such services, stating that the items have been tested and conform to the requirements and testing methods of the specified agency may be submitted. When performance requirements of this project's drawings and specifications vary from standard ARI rating conditions, computer printouts, catalog, or other application data certified by ARI or a nationally recognized laboratory as described above shall be included. If ARI does not have a current certification program that encompasses such application data, the manufacturer may self certify that his application data complies with project performance requirements in accordance with the specified test standards.

Service Organizations; FIO_____.

A certified list of qualified permanent service organizations for support of the equipment which includes their addresses and qualifications. The service organizations shall be reasonably convenient to the equipment installation and be able to render satisfactory service to the equipment on a regular and emergency basis during the warranty period of the contract.

SD-19 Operation and Maintenance Manuals

Operation Manual; FIO_____.

Six _____ complete copies of an operation manual in bound 216 by 279 mm (8-1/2 by 11 inch) booklets listing step-by-step procedures required for system startup, operation, and shutdown. The booklets shall include the manufacturer's name, model number, and parts list. The manuals shall include the manufacturer's name, model number, service manual, and a brief description of all equipment and their basic operating features.

Maintenance Manual; FIO_____.

Six _____ complete copies of maintenance manual in bound 216 by 279 mm (8-1/2 by 11 inch) booklets listing routine maintenance procedures, possible breakdowns and repairs, and a trouble shooting guide. The manuals shall include piping and equipment layouts and simplified wiring and control diagrams of the system as installed.

1.3 QUALIFICATIONS

Piping shall be welded in accordance with the qualified procedures using performance qualified welders and welding operators. Procedures and welders shall be qualified in accordance with ASME BPV IX. Welding procedures qualified by others, and welders and welding operators qualified by another employer may be accepted as permitted by ASME B31.1. The Contracting Officer shall be notified 24 hours in advance of tests and the tests shall be performed at the work site if practical. The welder or welding operator shall apply his assigned symbol near each weld he makes as a permanent record. Structural members shall be welded in accordance with Section 05055 WELDING, STRUCTURAL.

1.4 DELIVERY, STORAGE, AND HANDLING

Stored items shall be protected from the weather and contamination. Proper protection and care of all material before, during, and after installation shall be the Contractor's responsibility. Any materials found to be damaged shall be replaced at the Contractor's expense. During installation, piping and similar openings shall be capped to keep out dirt and other foreign matter.

1.5 PROJECT/SITE CONDITIONS

1.5.1 Verification of Dimensions

The Contractor shall become familiar with all details of the work, verify dimensions in the field, and advise the Contracting Officer of any discrepancy before performing any work.

1.5.2 Drawings

Because of the small scale of the drawings, it is not possible to indicate all offsets, fittings, and accessories that may be required. The Contractor shall carefully investigate the plumbing, electrical, structural and finish conditions that would affect the work to be performed and arrange such work accordingly, furnishing required offsets, fittings, and

accessories to meet such conditions. Equipment, ductwork, and piping arrangements shall fit into space allotted and allow adequate acceptable clearances for installation, replacement, entry, servicing, and maintenance.

PART 2 PRODUCTS

2.1 STANDARD PRODUCTS

Materials and equipment shall be standard products of a manufacturer regularly engaged in the manufacturing of such products, which are of a similar material, design and workmanship. The standard products shall have been in satisfactory commercial or industrial use for 2 years prior to bid opening. The 2 year use shall include applications of equipment and materials under similar circumstances and of similar size. The 2 years experience shall be satisfactorily completed by a product which has been sold or is offered for sale on the commercial market through advertisements, manufacturer's catalogs, or brochures. Products having less than a 2 year field service record shall be acceptable if a certified record of satisfactory field operation, for not less than 6000 hours exclusive of the manufacturer's factory tests, can be shown. Products shall be supported by a service organization. System components shall be environmentally suitable for the indicated locations.

2.2 NAMEPLATES

Major equipment including condensing unit, furnace, coils & exhaust fans and motors shall have the manufacturer's name, address, type or style, model or serial number, and catalog number on a plate secured to the item of equipment. Plates shall be durable and legible throughout equipment life and made of anodized aluminum or stainless steel . Plates shall be fixed in prominent locations with nonferrous screws or bolts.

2.3 ELECTRICAL WORK

Electrical equipment, motors, motor efficiencies, and wiring shall be in accordance with Section 16415 ELECTRICAL WORK, INTERIOR. Electrical motor driven equipment specified shall be provided complete with motors, motor starters, and controls. Electrical characteristics shall be as shown, and unless otherwise indicated, all motors of 746 kW (1 hp) and above with open, dripproof, totally enclosed, or explosion proof fan cooled enclosures, shall be high efficiency type. Field wiring shall be in accordance with manufacturer's instructions. Each motor shall conform to NEMA MG 1 and NEMA MG 2 and be of sufficient size to drive the equipment at the specified capacity without exceeding the nameplate rating of the motor. Motors shall be continuous duty with the enclosure specified. Motor starters shall be provided complete with thermal overload protection and other appurtenances necessary for the motor control indicated. Motors shall be furnished with a magnetic across-the-line or reduced voltage type starter as required by the manufacturer. Motor duty requirements shall allow for maximum frequency start-stop operation and minimum encountered interval between start and stop. Motors shall be sized for the applicable loads. Motor torque shall be capable of accelerating the connected load within 20 seconds with 80 percent of the rated voltage maintained at motor terminals during one starting period. Motor bearings shall be fitted with grease supply fittings and grease relief to outside of enclosure. Manual or automatic control and protective or signal devices required for the operation specified and any control wiring required for controls and devices specified, but not shown, shall be provided.

2.4 UNITARY EQUIPMENT, SPLIT SYSTEM

Unit shall be an air-cooled split system which employs a remote condensing unit, a separate indoor unit, and interconnecting refrigerant piping. Unit shall be the air-conditioning type conforming to applicable Underwriters Laboratories (UL) standards including UL 1995. Unit shall be rated in accordance with ARI 210/240 ARI 325. Unit shall be provided with necessary fans, air filters, , and cabinet construction as specified in paragraph "System Components". The remote unit shall be as specified in paragraph CONDENSING UNIT. Evaporator or supply fans shall be double-width, double inlet, forward curved, backward inclined, or airfoil blade, centrifugal scroll type. Condenser or outdoor fans shall be the manufacturer's standard for the unit specified and may be either propeller or centrifugal scroll type. Fan and condenser motors shall have dripproof totally enclosed enclosures.

2.4.1 Air-to-Refrigerant Coil

Coils shall have nonferrous tubes of 10 mm (3/8 inch) minimum diameter with copper or aluminum fins that are mechanically bonded or soldered to the tubes. Coils shall be protected with a minimum 0.076 mm thick phenolic or vinyl coating. Casing shall be galvanized steel or aluminum. Contact of dissimilar metals shall be avoided. Coils shall be tested in accordance with ASHRAE 15 at the factory and be suitable for the working pressure of the installed system. Each coil shall be dehydrated and sealed after testing and prior to evaluation and charging. Each unit shall be provided with a factory operating charge of refrigerant and oil or a holding charge. Unit shipped with a holding charge shall be field charged. Separate expansion devices shall be provided for each compressor circuit.

2.4.2 Refrigeration Circuit

Refrigerant-containing components shall comply with ASHRAE 15 and be factory tested, cleaned, dehydrated, charged, and sealed. Refrigerant charging valves and connections, and pumpdown valves shall be provided for each circuit. Filter-drier shall be provided in each liquid line and be reversible-flow type.

2.4.3 Unit Controls

Unit shall be internally prewired with a 24 or120 volt control circuit powered by an internal transformer. Terminal blocks shall be provided for power wiring and external control wiring. Unit shall have cutoffs for high and low pressure, and low oil pressure for compressors with positive displacement oil pumps, supply fan failure, and safety interlocks on all service panels. Adjustable-cycle timers shall prevent short-cycling. Multiple compressors shall be staged by means of a time delay. Unit shall be internally protected by fuses or a circuit breaker in accordance with UL 1995.

2.5 EQUIPMENT EFFICIENCY

Unit shall have an efficiency as indicated on the drawings.

2.6 CONDENSING UNIT

Each remote condenser coil shall be fitted with a manual isolation valve and an access valve on the coil side. Saturated refrigerant condensing temperature shall not exceed 49 degrees C (120 degrees F) at 40 degrees C

(95 degrees F) ambient. Fan and cabinet construction shall be provided as specified in paragraph "System Components". Fan and condenser motors shall have open dripproof totally enclosed enclosures.

2.6.1 Condensing Coil

Coils shall have nonferrous tubes of 10 mm (3/8 inch) minimum diameter with copper or aluminum fins that are mechanically bonded or soldered to the tubes. Coils shall be protected with a minimum 0.076 mm (3 mil) thick phenolic or vinyl coating. Casing shall be galvanized steel or aluminum. Contact of dissimilar metals shall be avoided. Coils shall be tested in accordance with ASHRAE 15 at the factory and be suitable for the working pressure of the installed system. Each coil shall be dehydrated and sealed after testing and prior to evaluation and charging. Each unit shall be provided with a factory operating charge of refrigerant and oil or a holding charge. Unit shipped with a holding charge shall be field charged. Separate expansion devices shall be provided for each compressor circuit.

2.6.1.1 Unit Controls

The control system shall be complete with required accessories for regulating condenser pressure by fan cycling, modulating condenser coil or fan dampers, flooding the condenser, or a combination of the above. Unit mounted control panels or enclosures shall be constructed in accordance with applicable requirements of NFPA 70 and housed in NEMA ICS 6, Class 1 or 3A enclosures. Controls shall include control transformer, fan motor starters, time delay start-up, overload protective devices, interface with local and remote components, and intercomponent wiring to terminal block points.

2.6.2 Compressor

Compressor shall be direct drive, semi-hermetic or hermetic reciprocating, or scroll type capable of operating at partial load conditions. Compressor shall be capable of continuous operation down to the lowest step of unloading as specified. If standard with the manufacturer, two or more compressors may be used in lieu of a single compressor with unloading capabilities, in which case the compressors will operate in sequence, and each compressor shall have an independent refrigeration circuit through the condenser and evaporator. Each compressor shall start in the unloaded position. Each compressor shall be provided with vibration isolators, crankcase heater, thermal overloads, and high and low pressure safety cutoffs and protection against short cycling.

2.7 SYSTEM COMPONENTS

2.7.1 Refrigerant and Oil

Refrigerant shall be one of the fluorocarbon gases. Refrigerants shall have number designations and safety classifications in accordance with ASHRAE 34. Refrigerants shall meet the requirements of ARI 700 as a minimum. Refrigerants shall have an Ozone Depletion Potential (ODP) of less than or equal to 0.05. Contractor shall provide and install a complete charge of refrigerant for the installed system as recommended by the manufacturer. Except for factory sealed units, two complete charges of lubricating oil for each compressor crankcase shall be furnished. One charge shall be used during the system performance testing period. Following the satisfactory completion of the performance testing, the oil shall be drained and replaced with a second charge. Lubricating oil shall

be of a type and grade recommended by the manufacturer for each compressor. Where color leak indicator dye is incorporated, charge shall be in accordance with manufacturer's recommendation.

2.8 TEMPERATURE CONTROLS

Temperature controls shall be in accordance with drawings. .

2.9 DUCTWORK COMPONENTS

2.9.1 Metal Ductwork

Every aspect of metal ductwork construction, including fittings and components, shall comply with SMACNA-06 unless otherwise specified. Elbows shall be radius type with a centerline radius of 1-1/2 times the width or diameter of the duct where space permits. Otherwise, elbows having a minimum radius equal to the width or diameter of the duct or square elbows with factory fabricated turning vanes may be used. Static pressure Class 125, 250, 500 Pa (1/2, 1, and 2 inch w.g.) ductwork shall meet the requirements of Seal Class C. Class 750 through 2500 Pa (3 through 10 inch) shall meet the requirements of Seal Class A. Sealants shall conform to fire hazard classification specified in Section 15250 THERMAL INSULATION FOR MECHANICAL SYSTEMS. Pressure sensitive tape shall not be used as a sealant. Spiral lock seam duct, and flat oval shall be made with duct sealant and locked with not less than 3 equally spaced drive screws or other approved methods indicated in SMACNA-06. The sealant shall be applied to the exposed male part of the fitting collar so that the sealer will be on the inside of the joint and fully protected by the metal of the duct fitting. One brush coat of the sealant shall be applied over the outside of the joint to at least 50 mm band width covering all screw heads and joint gap. Dents in the male portion of the slip fitting collar will not be acceptable.

2.9.1.1 Transitions

Diverging air flow transitions shall be made with each side pitched out a maximum of 15 degrees, for an included angle of 30 degrees. Transitions for converging air flow shall be made with each side pitched in a maximum of 30 degrees, for an included angle of 60 degrees, or shall be as indicated. Factory-fabricated reducing fittings for systems using round duct sections when formed to the shape of the ASME short flow nozzle, need not comply with the maximum angles specified.

2.9.1.2 Metallic Flexible Duct

Metallic type duct shall be single-ply galvanized steel orType 316 stainless steel ortwo-ply aluminum or, self supporting to 2.4 m spans. Duct shall be of corrugated/interlocked, folded and knurled type seam construction, bendable without damage through 180 degrees with a throat radius equal to 1/2 duct diameter. Duct shall conform to UL 181and shall be rated for positive or negative working pressure of 3.75 kPa (15 inches water gauge) at 177 degrees C (350 degrees F) when duct is aluminum, and 343 degrees C (650 degrees F) when duct is galvanized steel or stainless steel.

2.9.1.3 Insulated Nonmetallic Flexible Duct Runouts

Flexible duct runouts shall be used only where indicated. Runouts shall not exceed 3 m in length, shall be preinsulated, factory fabricated, and

comply with NFPA 90A and UL 181. Either field or factory applied vapor barrier shall be provided. Where coil induction or high velocity units are supplied with vertical air inlets, a streamlined and vaned and mitered elbow transition piece shall be provided for connection to the flexible duct or hose. The last elbow to these units, other than the vertical air inlet type, shall be a die-stamped elbow and not a flexible connector. Insulated flexible connectors may be used as runouts. The insulation material surface shall not be exposed to the air stream.

2.9.1.4 General Service Duct Connectors

A flexible duct connector approximately 150 mm in width shall be provided where sheet metal connections are made to fans or where ducts of dissimilar metals are connected. For round/oval ducts, the flexible material shall be secured by stainless steel or zinc-coated, iron clinch-type draw bands. For rectangular ducts, the flexible material locked to metal collars shall be installed using normal duct construction methods. The composite connector system shall comply with UL 214 and be classified as "flame-retarded fabrics" in UL-01.

2.9.2 Ductwork Insulation

Ductwork insulation and related materials shall conform to the requirements of Section 15250 THERMAL INSULATION FOR MECHANICAL SYSTEMS.

2.9.3 Ductwork Accessories

2.9.3.1 Duct Access Doors

Access doors shall be provided in ductwork at all devices, automatic dampers, coils, thermostats, and other apparatus requiring service and inspection in the duct system, and unless otherwise shown, shall conform to SMACNA-06. Access doors shall be provided upstream and downstream of air flow measuring primaries and heating and cooling coils. Doors shall be minimum 375 by 450 mm (15 by 18 inches), unless otherwise shown. Where duct size will not accommodate this size door, the doors shall be made as large as practicable. Doors 600 by 600 mm (24 by 24 inches) or larger shall be provided with fasteners operable from both sides. Doors in insulated ducts shall be the insulated type.

2.9.3.2 Splitters and Manual Balancing Dampers

Splitters and manual balancing dampers shall be furnished with accessible operating mechanisms. Where operators occur in finished portions of the building, operators shall be chromium plated with all exposed edges rounded. Splitters shall be operated by quadrant operators or 4.75 mm (3/16 inch) rod brought through the side of the duct with locking setscrew and bushing. Two rods are required on splitters over 8 inches. Manual volume control dampers shall be operated by locking-type quadrant operators. Dampers and splitters shall be 2 gauges heavier than the duct in which installed. Unless otherwise indicated, multileaf dampers shall be opposed blade type with maximum blade width of 300 mm. Access doors or panels shall be provided for all concealed damper operators and locking setscrews. Unless otherwise indicated, the locking-type quadrant operators for dampers, when installed on ducts to be thermally insulated, shall be provided with stand-off mounting brackets, bases, or adapters to provide clearance between the duct surface and the operator not less than the thickness of the insulation. Stand-off mounting items shall be integral with the operator or standard accessory of the damper manufacturer. Volume

dampers shall be provided where indicated.

2.9.3.3 Air Deflectors and Branch Connections

Air deflectors shall be provided at all duct mounted supply outlets, at all takeoff or extension collars to supply outlets, at all duct branch takeoff connections, and at all 90 degree elbows, as well as at all locations as indicated on the drawings or shown in the Sheet Metal and Air Contractors National Association manuals. Air deflectors, except those installed in 90 degree elbows, shall be provided with an approved means of adjustment. Adjustment shall be made from easily accessible means inside the duct or from an adjustment with sturdy lock on the face of the duct. When installed on ducts to be thermally insulated, external adjustments shall be provided with stand-off mounting brackets, integral with the adjustment device, to provide clearance between the duct surface and the adjustment device not less than the thickness of the thermal insulation. Air deflectors shall be factory-fabricated units consisting of curved turning vanes or louver blades designed to provide uniform air distribution and change of direction with minimum turbulence or pressure loss. Air deflectors shall be factory or field assembled. Blade air deflectors, also called blade air extractors, shall be approved factory fabricated units consisting of equalizing grid and adjustable blade and lock. Adjustment shall be easily made from the face of the diffuser or by position adjustment and lock external to the duct. Stand-off brackets shall be provided on insulated ducts and are described herein before. Fixed air deflectors, also called turning vanes, shall be provided in all 90 degree elbows. Turning vanes shall be designed as shown in the Sheet Metal and Air Condition Contractors National Association manuals.

2.9.4 Duct Sleeves, Framed Prepared Openings, Closure Collars

2.9.4.1 Duct Sleeves

Duct sleeves shall be provided for all round ducts 375 mm in diameter or less passing through floors, walls, ceilings, or roof, and installed during construction of the floor, wall, ceiling, or roof. Round ducts larger than 375 mm in diameter and all square, rectangular, and oval ducts passing through floors, walls, ceilings, or roof shall be installed through framed prepared openings. The Contractor shall be responsible for the proper size and location of sleeves and prepared openings. Sleeves and framed openings are also required where grilles, registers, and diffusers are installed at the openings. Framed prepared openings shall be fabricated from 1.0 mm (20 gauge) galvanized steel, unless otherwise indicated. Where sleeves are installed in bearing walls or partitions, black steel pipe, ASTM A 53, Schedule 20 shall be used. Sleeve shall provide 25 mm clearance between the duct and the sleeve or 25 mm clearance between the insulation and the sleeve for insulated ducts.

2.9.4.2 Framed Prepared Openings

Openings shall have 25 mm clearance between the duct and the opening or 25 mm clearance between the insulation and the opening for insulated ducts.

2.9.4.3 Closure Collars

Collars shall be fabricated of galvanized sheet metal not less than 100 mm wide, unless otherwise indicated, and shall be installed on exposed ducts on each side of walls or floors where sleeves or prepared openings are provided. Collars shall be installed tight against surfaces. Collars

shall fit snugly around the duct or insulation. Sharp edges of the collar around insulated duct shall be ground smooth to preclude tearing or puncturing the insulation covering or vapor barrier. Collars for round ducts 375 mm in diameter or less shall be fabricated from 1.0 mm (20 gauge) galvanized steel. Collars for round ducts larger than 375 mm and all square, and rectangular ducts shall be fabricated from 1.3 mm (18 gauge) galvanized steel. Collars shall be installed with fasteners on maximum 150 mm centers, except that not less than 4 fasteners shall be used.

2.9.5 Diffusers, Registers, and Grilles

Units shall be factory-fabricated of steel, corrosion-resistant steel, or aluminum and shall distribute the specified quantity of air evenly over space intended without causing noticeable drafts, air movement faster than 0.25 m/s (50 fpm) in occupied zone, or dead spots anywhere in the conditioned area. Outlets for diffusion, spread, throw, and noise level shall be as required for specified performance. Performance shall be certified in accordance with ADC 1062:GRD. Inlets and outlets shall be sound rated and certified in accordance with ADC 1062:GRD. Sound power level shall be as indicated. Diffusers and registers shall be provided with volume damper with accessible operator, unless otherwise indicated; or if standard with the manufacturer, an automatically controlled device will be acceptable. Volume dampers shall be opposed blade type for all diffusers and registersWhere the inlet and outlet openings are located less than 2 m above the floor, they shall be protected by a grille or screen in accordance with NFPA 90A.

2.9.5.1 Diffusers

Diffuser types shall be as indicated. Ceiling mounted units shall be furnished with antismudge devices, unless the diffuser unit minimizes ceiling smudging through design features. Diffusers shall be provided with air deflectors of the type indicated. ceiling diffusers shall conform to the requirements of UL-03for the interchangeable use as cooled or heated air supply diffusers or return air units. Ceiling mounted units shall be installed with rims tight against ceiling. Sponge rubber gaskets shall be provided between ceiling and surface mounted diffusers for air leakage control. Suitable trim shall be provided for flush mounted diffusers. Duct collar connecting the duct to diffuser shall be airtight and shall not interfere with volume controller. Return or exhaust units shall be similar to supply diffusers.

2.9.5.2 Registers and Grilles

Units shall be four-way directional-control type, except that return and exhaust registers may be fixed horizontal or vertical louver type similar in appearance to the supply register face. Registers shall be provided with sponge-rubber gasket between flanges and wall or ceiling. Wall supply registers shall be installed at least 150 mm below the ceiling unless otherwise indicated. Return and exhaust registers shall be located 150 mm above the floor unless otherwise indicated. Four-way directional control may be achieved by a grille face which can be rotated in 4 positions or by adjustment of horizontal and vertical vanes. Grilles shall be as specified for registers, without volume control damper.

2.9.6 Louvers

Louvers shall be furnished for installation in exterior walls which are directly connected by ductwork to air handling equipment. Louver blades

shall be fabricated from anodized aluminum or galvanized steel sheets, and shall be provided with a frame of galvanized steel or aluminum structural shapes. Sheet metal thickness and fabrication shall conform to SMACNA-06. Blades shall be accurately fitted and secured to frames. Edges of louver blades shall be folded or beaded for rigidity and baffled to exclude driving rain. Louver shall be provided with bird screen. Louvers shall bear AMCA Certified Ratings Seal for air performance and water penetration ratings as described in AMCA 500.

2.10 REFRIGERANT PIPING

Refrigerant piping, valves, fittings, and accessories shall conform to the requirements of ASHRAE 15 and ASME B31.5, except as specified.

2.10.1 Steel Pipe

Steel pipe for refrigerant service shall conform to ASTM A 53, Schedule 40, Type E or S, Grades A or B. Type F pipe shall not be used.

2.10.2 Joints and Fittings, Steel Pipe

Joints and fittings shall be steel butt-welding, socket-welding, or malleable iron threaded type. Pipe shall be welded except that joints on lines 50 mm (2 inches) and smaller may be threaded. Threads shall be tapered type conforming to ASME B1.20.1. The malleable iron threaded type fitting shall be of a weight corresponding to adjacent pipe. Flanges and flange faces of fittings shall be tongue-and-groove type with gaskets suitable for the refrigerant used; size 25 mm (1 inch) and smaller shall be oval, two-bolt type; size above 25 mm (1 inch), up to and including 100 mm (4 inches), shall be square four-bolt type; and sizes over 100 mm (4 inches) shall be round.

2.10.3 Steel Tubing

Steel tubing for refrigeration service shall be in accordance with ASTM A 334, Grade 1. Tubing with a nominal diameter of 10 mm (3/8 inch) or 15 mm (1/2 inch) shall have a wall thickness of 1.22 mm (0.049 inches). Tubing with a nominal diameter of 20 mm (3/4 inch) through 50 mm (2 inches) shall have a wall thickness of 1.62 mm (0.065 inches). Tubing with a nominal diameter of 65 through 100 mm (2 1/2 inches through 4 inches) shall have a wall thickness of 2.4 mm (0.095 inches). Steel tubing shall be cold-rolled, electric-forged, welded-steel. One end of the tubing shall be provided with a socket. Steel tubing shall be cleaned, dehydrated, and capped.

2.10.4 Joints and Fittings, Steel Tubing

Joints and fittings shall be socket type provided by the steel tubing manufacturer.

2.10.5 Copper Tubing

Copper tubing shall conform to ASTM B 280 annealed or hard drawn as required. Copper tubing shall be soft annealed where bending is required and hard drawn where no bending is required. Soft annealed copper tubing shall not be used in sizes larger than 35 mm (1-3/8 inches). Joints shall be brazed except that joints on lines 22 mm (7/8 inch) and smaller may be flared.

2.10.6 Joints and Fittings, Copper Tubing

Copper tube joints and fittings shall be flare joint type with short-shank flare, or solder-joint pressure type. Joints and fittings for brazed joint shall be wrought-copper or forged-brass sweat fittings. Cast sweat-type joints and fittings shall not be allowed for brazed joints.

2.10.7 Valves

Valves shall be pressure and temperature rated for contained refrigerant service and shall comply with ASME B31.5. Metals of construction shall be ferrous or copper based. Atmosphere exposed valve stems shall be stainless steel or corrosion resistant metal plated carbon steel. Valve body connections shall be brazed or welded socket, flanged or combination thereof. Threaded connections shall not be used, except in pilot pressure or gauge lines where maintenance disassembly is required and welded flanges cannot be used. Valves shall be suitable for or fitted with extended copper ends for brazing in-place without disassembly. Ferrous body valves shall be fitted with factory fabricated and brazed copper transitions. To minimize system pressure drops, where practicable, globe valves shall be angle body type, and straight line valves shall be full port ball type. Control valve inlets shall be fitted with integral or adapted strainer or filter where recommended or required by manufacturer. Valves shall be cleaned and sealed moisture-tight.

2.10.7.1 Refrigerant-Stop Valves

Valves, in sizes through 15 mm (5/8 inch), shall be handwheel operated, straight or angle, packless diaphragm globe type with back-seating stem, brazed ends, except where SAE flare or retained seal cap connections are required. In sizes over 15 mm (5/8 inch), valves shall be globe or angle type, wrench operated with ground-finish stems, or ball valves, packed especially for refrigerant service, back seated, and provided with seal caps. Refrigerant isolation and shut-off valves shall have retained or captive spindles and facilities for tightening or replacement of the gland packing under line pressure as applicable. Stop valves shall have back-seating plated steel stem, bolted bonnet in sizes 25 mm (1-1/8 inches) OD and larger, integral or flanged transition brazed socket. Valves in sizes through 65 mm (2-1/2 inches) shall be end-entry body assembly, full-port, floating ball type, with equalizing orifice fitted chrome plated ball, seats and seals of tetrafluoroethylene, chrome plated or stainless steel stem, and seal cap. In sizes 100 mm (4 inch) IPS and larger, and in smaller sizes where carbon steel piping is used, valve bodies shall be tongue and groove flanged and complete with mating flange, gaskets and bolting for socket or butt-weld connection. Purge, charge and receiver valves shall be of manufacturer's standard configuration.

2.10.8 Accessories

2.10.9 Filter Driers

Driers shall conform to ARI 710. Sizes 15 mm (5/8 inch) and larger shall be the full flow, replaceable core type. Sizes 12 mm (1/2 inch) and smaller shall be the sealed type. Cores shall be of suitable desiccant that will not plug, cake, dust, channel, or break down, and shall remove water, acid, and foreign material from the refrigerant. Filter driers shall be constructed so that none of the desiccant will pass into the refrigerant lines. Minimum bursting pressure shall be 10.3 MPa (1,500 psi).

2.10.9.1 Sight Glass and Liquid Level Indicator

a. Assembly and Components: Assembly shall be pressure- and temperature-rated and constructed of materials suitable for the service. Glass shall be borosilicate type. Ferrous components subject to condensation shall be electro-galvanized.

b. Gauge Glass: Gauge glass shall include top and bottom isolation valves fitted with automatic checks, and packing followers; red-line or green-line gauge glass; elastomer or polymer packing to suit the service; and gauge glass guard.

c. Bull's-Eye and Inline Sight Glass Reflex Lens: Bull's-eye and inline sight glass reflex lens shall be provided for dead-end liquid service. For pipe line mounting, two plain lenses in one body suitable for backlighted viewing shall be provided.

d. Moisture Indicator: Indicator shall be a self-reversible action, moisture reactive, color changing media. Indicator shall be furnished with full-color-printing tag containing color, moisture and temperature criteria. Unless otherwise indicated, the moisture indicator shall be an integral part of each corresponding sight glass.

2.10.9.2 Brazing Materials

Brazing materials for refrigerant piping shall be in accordance with AWS A5.8, Classification BCuP-5.

2.11 DRAIN AND MISCELLANEOUS PIPING

Piping, fittings, valves and accessories for drain and miscellaneous services shall be in accordance with Section 15400 PLUMBING, GENERAL PURPOSE.

2.12 FABRICATION

2.12.1 Factory Coating

Unless otherwise specified, equipment and component items, when fabricated from ferrous metal, shall be factory finished with the manufacturer's standard finish, except that items located outside of buildings shall have weather resistant finishes that will withstand 125 hours exposure to the salt spray test specified in ASTM B 117 using a 25 percent sodium chloride solution. Immediately after completion of the test, the specimen shall show no signs of blistering, wrinkling, cracking, or loss of adhesion and no sign of rust creepage beyond 3 mm on either side of the scratch mark. Cut edges of galvanized surfaces where hot-dip galvanized sheet steel is used shall be coated with a zinc-rich coating conforming to ASTM D 520, Type I.

2.12.2 Field Painting

Painting required for surfaces not otherwise specified, and finish painting of items only primed at the factory are specified in Section 09900PAINTING, GENERAL.

PART 3 EXECUTION

3.1 INSTALLATION

Work shall be performed in accordance with the manufacturer's published diagrams, recommendations, and equipment warranty requirements. Where equipment is specified to conform to the requirements of ASME BPV VIII Div 1 and ASME BPV IX, the design, fabrication, and installation of the system shall conform to ASME BPV VIII Div 1 and ASME BPV IX.

3.1.1 Equipment

Refrigeration equipment and the installation thereof shall conform to ASHRAE 15. Necessary supports shall be provided for all equipment, appurtenances, and pipe as required, including frames or supports for condensing unit and similar items. Compressors shall be isolated from the building structure. If mechanical vibration isolators are not provided, vibration absorbing foundations shall be provided. Each foundation shall include isolation units consisting of machine and floor or foundation fastenings, together with intermediate isolation material. Other floor-mounted equipment shall be set on not less than a 150 mm concrete pad doweled in place. Concrete for foundations shall be as specified in Section 03300 CAST-IN-PLACE STRUCTURAL CONCRETE. Equipment shall be properly leveled, aligned, and secured in place in accordance with manufacturer's instructions.

3.1.2 Building Surface Penetrations

Sleeves in nonload bearing surfaces shall be galvanized sheet metal, conforming to ASTM A 653, Coating Class G-90, 1.0 mm (20 gauge). Sleeves in load bearing surfaces shall be uncoated carbon steel pipe, conforming to ASTM A 53, Standard weight. Sealants shall be applied to moisture and oil-free surfaces and elastomers to not less than 13 mm depth. Sleeves shall not be installed in structural members.

3.1.2.1 General Service Areas

Each sleeve shall extend through its respective wall, floor, or roof, and shall be cut flush with each surface. Pipes passing through concrete or masonry wall or concrete floors or roofs shall be provided with pipe sleeves fitted into place at the time of construction. Sleeves shall be of such size as to provide a minimum of 6.35 mm all-around clearance between bare pipe and sleeves or between jacketed-insulation and sleeves. Except in pipe chases or interior walls, the annular space between pipe and sleeve or between jacket over-insulation and sleeve shall be sealed in accordance with Section 07920 JOINT SEALING.

3.1.2.2 Waterproof Penetrations

Pipes passing through roof or floor waterproofing membrane shall be installed through a 17-ounce copper sleeve, or a 0.81 mm (0.032 inch) thick aluminum sleeve, each within an integral skirt or flange. Flashing sleeve shall be suitably formed, and skirt or flange shall extend not less than 200 mm from the pipe and be set over the roof or floor membrane in a troweled coating of bituminous cement. The flashing sleeve shall extend up the pipe a minimum of 50 mm above the roof or floor penetration. The annular space between the flashing sleeve and the bare pipe or between the flashing sleeve and the metal-jacket-covered insulation shall be sealed as indicated. Penetrations shall be sealed by either one of the following methods.

a. Waterproofing Clamping Flange: Pipes up to and including 250 mm in diameter passing through roof or floor waterproofing membrane may be installed through a cast iron sleeve with caulking recess, anchor lugs, flashing clamp device, and pressure ring with brass bolts. Waterproofing membrane shall be clamped into place and sealant shall be placed in the caulking recess.

b. Modular Mechanical Type Sealing Assembly: In lieu of a waterproofing clamping flange and caulking and sealing of annular space between pipe and sleeve or conduit and sleeve, a modular mechanical type sealing assembly may be installed. Seals shall consist of interlocking synthetic rubber links shaped to continuously fill the annular space between the pipe/conduit and sleeve with corrosion protected carbon steel bolts, nuts, and pressure plates. Links shall be loosely assembled with bolts to form a continuous rubber belt around the pipe with a pressure plate under each bolt head and each nut. After the seal assembly is properly positioned in the sleeve, tightening of the bolt shall cause the rubber sealing elements to expand and provide a watertight seal rubber sealing elements to expand and provide a watertight seal between the pipe/conduit seal between the pipe/conduit and the sleeve. Each seal assembly shall be sized as recommended by the manufacturer to fit the pipe/conduit and sleeve involved. The Contractor electing to use the modular mechanical type seals shall provide sleeves of the proper diameters.

3.1.2.3 Fire-Rated Penetrations

Penetration of fire-rated walls, partitions, and floors shall be sealed as specified in Section 07270 FIRESTOPPING.

3.1.2.4 Escutcheons

Finished surfaces where exposed piping, bare or insulated, pass through floors, walls, or ceilings, except in boiler, utility, or equipment rooms, shall be provided with escutcheons. Where sleeves project slightly from floors, special deep-type escutcheons shall be used. Escutcheon shall be secured to pipe or pipe covering.

3.1.3 Access Panels

Access panels shall be provided for all concealed valves vents, controls, and items requiring inspection or maintenance. Access panels shall be of sufficient size and located so that the concealed items may be serviced and maintained or completely removed and replaced. Access panels shall be as specified in Section 05500 MISCELLANEOUS METALS.

3.1.4 General Piping Installation

3.1.4.1 Brazed Joints

Brazing shall be performed in accordance with AWS-01, except as modified herein. During brazing, the pipe and fittings shall be filled with a pressure regulated inert gas, such as nitrogen, to prevent the formation of scale. Before brazing copper joints, both the outside of the tube and the inside of the fitting shall be cleaned with a wire fitting brush until the entire joint surface is bright and clean. Brazing flux shall not be used. Surplus brazing material shall be removed at all joints. Steel tubing

joints shall be made in accordance with the manufacturer's recommendations. Joints in steel tubing shall be painted with the same material as the baked-on coating within 8 hours after joints are made. Tubing shall be protected against oxidation during brazing by continuous purging of the inside of the piping using nitrogen. Piping shall be supported prior to brazing and not be sprung or forced.

3.1.4.2 Threaded Joints

Threaded joints shall be made with tapered threads and made tight with PTFE tape complying with ASTM D 3308 or equivalent thread-joint compound applied to the male threads only. Not more than three threads shall show after the joint is made.

3.1.4.3 Flared Connections

When flared connections are used, a suitable lubricant shall be used between the back of the flare and the nut in order to avoid tearing the flare while tightening the nut.

3.1.5 Refrigeration Piping

Unless otherwise specified, pipe and fittings installation shall conform to requirements of ASME B31.5. Pipe shall be cut accurately to measurement established at the jobsite and worked into place without springing or forcing. Cutting or otherwise weakening of the building structure to facilitate piping installation will not be permitted without written approval. Pipes shall be cut square, shall have burrs removed by reaming, and shall be installed in a manner to permit free expansion and contraction without damage to joints or hangers. Filings, dust, or dirt shall be wiped from interior of pipe before connections are made.

3.1.5.1 Directional Changes

Changes in direction shall be made with fittings, except that bending of pipe 100 mm (4 inches) and smaller will be permitted, provided a pipe bender is used and wide-sweep bends are formed. The centerline radius of bends shall not be less than 6 diameters of the pipe. Bent pipe showing kinks, wrinkles, or other malformations will not be accepted.

3.1.5.2 Functional Requirements

Piping shall be installed 4 mm per meter of pipe in the direction of flow to ensure adequate oil drainage. Open ends of refrigerant lines or equipment shall be properly capped or plugged during installation to keep moisture, dirt, or other foreign material out of the system. Piping shall remain capped until installation. Equipment piping shall be in accordance with the equipment manufacturer's recommendations and the contract drawings.

3.1.5.3 Manual Valves

Stop valves shall be installed on each side of each piece of equipment such as compressors, condensers, evaporators, receivers, and other similar items in multiple-unit installation, to provide partial system isolation as required for maintenance or repair. Angle and globe valves shall be installed with stems horizontal unless otherwise indicated. Ball valves shall be installed with stems positioned to facilitate operation and maintenance. Isolating valves for pressure gauges and switches shall be external to thermal insulation. Safety switches shall not be fitted with

isolation valves. Thermal wells for insertion thermometers and thermostats shall extend beyond thermal insulation surface not less than 25 mm. Filter dryers having access ports may be considered a point of isolation. Purge valves shall be provided at all points of systems where accumulated noncondensible gases would prevent proper system operation. Valves shall be furnished to match line size, unless otherwise indicated or approved.

3.1.5.4 Valve Identification

Each system valve, including those which are part of a factory assembly, shall be tagged. Tags shall be in alphanumeric sequence, progressing in direction of fluid flow. Tags shall be embossed, engraved, or stamped plastic or nonferrous metal of various shapes, sized approximately 34 mm (1-3/8 inch) diameter, or equivalent dimension, substantially attached to a component or immediately adjacent thereto. Tags shall be attached with nonferrous, heavy duty, bead or link chain, 14 gauge annealed wire, nylon cable bands or as approved. Tag numbers shall be referenced in Operation and Maintenance Manuals and system diagrams.

3.1.6 Piping Supports

Refrigerant pipe supports shall be in accordance with ASME B31.5. Hangers used to support piping 50 mm (2 inches) and larger shall be fabricated to permit adequate adjustment after erection while still supporting the load. Pipe guides and anchors shall be installed to keep pipes in accurate alignment, to direct the expansion movement, and to prevent buckling, swaying, and undue strain. Piping subjected to vertical movement, when operating temperatures exceed ambient temperatures, shall be supported by variable spring hangers and supports or by constant support hangers.

3.1.6.1 Seismic Requirements

Piping and attached valves shall be supported and braced to resist seismic loads as specified under Section 13080 SEISMIC PROTECTION FOR MECHANICAL, ELECTRICAL EQUIPMENT . Structural steel required for reinforcement to properly support piping, headers, and equipment but not shown shall be provided under this section. Material used for support shall be as specified under Section 05210 STRUCTURAL STEEL.

3.1.6.2 Structural Attachments

Attachment to building structure concrete and masonry shall be by cast-in concrete inserts, built-in anchors, or masonry anchor devices. Inserts and anchors shall be applied with a safety factor not less than 5. Supports shall not be attached to metal decking. Masonry anchors for overhead applications shall be constructed of ferrous materials only. Material used for support shall be as specified under Section 05210 STRUCTURAL STEEL.

3.1.7 Pipe Hangers, Inserts, and Supports

Pipe hangers, inserts, and supports shall conform to MSS SP-58 and MSS SP-69, except as modified herein. Pipe hanger types 5, 12, and 26 shall not be used.

3.1.7.1 Hangers

Type 3 shall not be used on insulated piping. Type 24 may be used only on trapeze hanger systems or on fabricated frames.

3.1.7.2 Inserts

Type 18 inserts shall be secured to concrete forms before concrete is placed. Continuous inserts which allow more adjustments may be used if they otherwise meet the requirements for Type 18 inserts.

3.1.7.3 C-Clamps

Type 19 and 23 C-clamps shall be torqued per MSS SP-69 and have both locknuts and retaining devices, furnished by the manufacturer. Field-fabricated C-clamp bodies or retaining devices are not acceptable.

3.1.7.4 Angle Attachments

Type 20 attachments used on angles and channels shall be furnished with an added malleable-iron heel plate or adapter.

3.1.7.5 Saddles and Shields

Where Type 39 saddle or Type 40 shield are permitted for a particular pipe attachment application, the Type 39 saddle, connected to the pipe, shall be used on all pipe 100 mm (4 inches) and larger when the temperature of the medium is 16 degrees C or higher. Type 40 shields shall be used on all piping less than 100 mm (4 inches) and all piping 100 mm (4 inches) and larger carrying medium less than 16 degrees C. A high density insulation insert of cellular glass shall be used under the Type 40 shield for piping 50 mm (2 inches) and larger.

3.1.7.6 Horizontal Pipe Supports

Horizontal pipe supports shall be spaced as specified in MSS SP-69 and a support shall be installed not over 300 mm from the pipe fitting joint at each change in direction of the piping. Pipe supports shall be spaced not over 1.5 m apart at valves. Pipe hanger loads suspended from steel joist with hanger loads between panel points in excess of 222 N (50 pounds) shall have the excess hanger loads suspended from panel points.

3.1.7.7 Vertical Pipe Supports

Vertical pipe shall be supported at each floor, except at slab-on-grade, and at intervals of not more than 4.5 m, not more than 2.4 m from end of risers, and at vent terminations.

3.1.8 Piping Identification

Each piping system and direction of fluid flow shall be identified in accordance with applicable provisions of ANSI A13.1 with color coded, water, moisture and broad-spectrum temperature resistant, plastic labels.

3.1.9 Metal Ductwork

Installation shall be in accordance with SMACNA-06 unless otherwise indicated. Duct supports for sheet metal ductwork shall be in accordance with SMACNA-06, unless otherwise specified. Friction beam clamps indicated in SMACNA-06 will not be used. Supports on the risers shall allow free vertical movement of the duct. Supports shall be attached only to structural framing members and concrete slabs. Supports shall not be anchored to metal decking unless a means is provided and approved for preventing the anchor from puncturing the metal decking. Where supports

are required between structural framing members, suitable intermediate metal framing shall be provided. Where C-clamps are used, retainer clips shall be provided.

3.1.10 Field Applied Insulation

Field applied insulation shall be as specified in Section 15250 THERMAL INSULATION FOR MECHANICAL SYSTEMS.

3.1.11 Factory Applied Insulation

Refrigerant suction lines between an evaporator and compressors shall be insulated with not less than 19 mm (3/4 inch) thick unicellular plastic foam.

3.1.12 Framed Instructions

Framed instructions shall be framed under glass or laminated plastic and be posted where directed. Instructions shall include equipment layout, wiring and control diagrams, piping, valves and control sequences, and typed condensed operation instructions. The condensed operation instructions shall include preventative maintenance procedures, methods of checking the system for normal and safe operation, and procedures for safely starting and stopping the system. The instructions shall be posted before acceptance testing of the system.

3.2 TESTS

Tests shall be conducted in the presence of the Contracting Officer. Utilities for testing shall be provided as specified in the SPECIAL CONTRACT REQUIREMENTS. Water and electricity required for the tests will be furnished by the Government. Any material, equipment, instruments, and personnel required for the test shall be provided by the Contractor. The services of a qualified technician shall be provided as required to perform all tests and procedures indicated herein. Field tests shall be coordinated with Section 15990 TESTING, ADJUSTING, AND BALANCING OF HVAC SYSTEMS.

3.2.1 Refrigerant System

After all components of the refrigerant system have been installed and connected, the entire refrigeration system shall be subjected to a pneumatic test as described herein.

3.2.1.1 Preliminary Procedures

Prior to pneumatic testing, equipment which has been factory tested and refrigerant charged as well as equipment which could be damaged or cause personnel injury by imposed test pressure, positive or negative, shall be isolated from the test pressure or removed from the system. Safety relief valves and rupture discs, where not part of factory sealed systems, shall be removed and openings capped or plugged.

3.2.1.2 Pneumatic Test

Pressure control and excess pressure protection shall be provided at the source of test pressure. Valves shall be wide open, except those leading to the atmosphere. Test gas shall be dry nitrogen, with minus 55 degrees C (minus 70 degree F) dewpoint and less than 5 ppm oil. Test pressure shall

be applied in two stages before any refrigerant pipe is insulated or covered. First stage test shall be at 69 kPa (10 psi) with every joint being tested with a thick soap or color indicating solution. Second stage tests shall raise the system to the minimum refrigerant leakage test pressure specified in ASHRAE 15 with a maximum test pressure 25 percent greater. Pressure above 690 KPa (100 psig) shall be raised in 10 percent increments with a pressure acclimatizing period between increments. The initial test pressure shall be recorded along with the ambient temperature to which the system is exposed. Final test pressures of the second stage shall be maintained on the system for a minimum of 24 hours. At the end of the 24 hour period, the system pressure will be recorded along with the ambient temperature to which the system is exposed. A correction factor of 2 kPa (0.3 psi) will be allowed for each degree C (F) change between test space initial and final ambient temperature, plus for increase and minus for a decrease. If the corrected system pressure is not exactly equal to the initial system test pressure, then the system shall be investigated for leaking joints. To repair leaks, the joint shall be taken apart, thoroughly cleaned, and reconstructed as a new joint. Joints repaired by caulking, remelting, or back-welding\brazing shall not be acceptable. Following repair, the entire system shall be retested using the pnuematic tests described above. The entire system shall be reassemblied once the pneumatic tests are satisfactorily completed.

3.2.1.3 Evacuation Test

Following satisfactory completion of the pneumatic tests, the pressure shall be relieved and the entire system shall be evacuated to an absolute pressure of 300 micrometers. During evacuation of the system, the ambient temperature shall be higher than 2 degrees C. No more than one system shall be evacuated at one time by one vacuum pump. Once the desired vacuum has been reached, the vacuum line shall be closed and the system shall stand for 1 hour. If the pressure rises over 500 micrometers after the 1 hour period, then the system shall be evacuated again down to 300 micrometers and let set for another 1 hour period. The system shall not be charged until a vacuum of at least 500 micrometers is maintained for a period of 1 hour without the assistance of a vacuum line. If during the testing the pressure continues to rise, check the system for leaks, repair as required, and repeat the evacuation procedure. During evacuation, pressures shall be recorded by a thermocouple-type, electronic-type, or a calibrated-micrometer type gauge.

3.2.1.4 System Charging and Startup Test

Following satisfactory completion of the evacuation tests, the system shall be charged with the required amount of refrigerant by raising pressure to normal operating pressure and in accordance with manufacturer's procedures. Following charging, the system shall operate with high-side and low-side pressures and corresponding refrigerant temperatures, at design or improved values. The entire system shall be tested for leaks. Fluorocarbon systems shall be tested with halide torch or electronic leak detectors.

3.2.1.5 Refrigerant Leakage

If a refrigerant leak is discovered after the system has been charged, the leaking portion of the system shall immediately be isolated from the remainder of the system and the refrigerant pumped into the system receiver or other suitable container. Under no circumstances shall the refrigerant be discharged into the atmosphere.

3.2.1.6 Contractor's Responsibility

The Contractor shall, at all times during the installation and testing of the refrigeration system, take steps to prevent the release of refrigerants into the atmosphere. The steps shall include, but not be limited to, procedures which will minimize the release of refrigerants to the atmosphere and the use of refrigerant recovery devices to remove refrigerant from the system and store the refrigerant for reuse or reclaim. At no time shall more than 85 g (3 ounces) of refrigerant be released to the atmosphere in any one occurrence. Any system leaks within the first year shall be repaired in accordance with the requirements herein at no cost to the Government including material, labor, and refrigerant if the leak is the result of defective equipment, material, or installation.

3.3 CLEANING AND ADJUSTING

3.3.1 Piping

Prior to testing, pipes shall be cleaned free of scale and thoroughly flushed of all foreign matter. A temporary bypass shall be provided for water coils to prevent flushing water from passing through coils. Strainers and valves shall be thoroughly cleaned. Prior to testing and balancing, air shall be removed from each water system through the use of the air vents. Temporary measures, such as piping the overflow from vents to a collecting vessel shall be taken to avoid water damage during the venting process. Air vents shall be plugged or capped after the system has been vented.

3.3.2 Ductwork

Prior to testing, inside of ducts, plenums, and casing shall be thoroughly cleaned of all debris and blown free of small particles of rubbish and dust and then vacuum cleaned before installing outlet faces. Temporary filters shall be provided for fans that are operated during construction. New filters shall be installed after all construction dirt has been removed from the building and the ducts, plenum, casings, and other items specified have been vacuum cleaned. Fans shall be adjusted to the speed indicated by the manufacturer to meet specified conditions.

3.3.3 Equipment

Equipment shall be wiped clean, with all traces of oil, dust, dirt, or paint spots removed. System shall be maintained in this clean condition until final acceptance. Bearings shall be lubricated with oil or grease as recommended by the manufacturer. Belts shall be tightened to proper tension. Control valves and other miscellaneous equipment requiring adjustment shall be adjusted to setting indicated or directed.

3.3.4 Testing, Adjusting, and Balancing

Testing, adjusting, and balancing shall be as specified in Section 15990 TESTING, ADJUSTING AND BALANCING OF HVAC SYSTEMS.

3.4 DEMONSTRATIONS

Contractor shall conduct a training course for the operating staff as designated by the Contracting Officer. The training period shall consist of a total 4 hours of normal working time and start after the system is functionally completed but prior to final acceptance tests. The field

instructions shall cover all of the items contained in the operation and maintenance manuals as well as demonstrations of routine maintenance operations.

-- End of Section --

SECTION TABLE OF CONTENTS

DIVISION 15 - MECHANICAL

SECTION 15895

AIR SUPPLY, DISTRIBUTION, VENTILATION, AND EXHAUST SYSTEM

PART 1 GENERAL

1.1 REFERENCES
1.2 COORDINATION OF TRADES Ductwork, piping offsets, fittings, and accessories shall be furnished as required to provide a complete installation and to eliminate interference with other construction.
1.3 DELIVERY AND STORAGE
1.4 SUBMITTALS

PART 2 PRODUCTS

2.1 STANDARD PRODUCTS
2.2 ASBESTOS PROHIBITION
2.3 NAMEPLATES
2.4 EQUIPMENT GUARDS AND ACCESS
2.5 PIPING COMPONENTS
2.5.1 Steel Pipe
2.5.2 Joints and Fittings For Steel Pipe
2.5.2.1 Welded Joints and Fittings
2.5.2.2 Flanged Joints and Fittings
2.5.2.3 Threaded Joints and Fittings
2.5.2.4 Dielectric Unions and Flanges
2.5.2.5 Grooved Mechanical Joints and Fittings
2.5.3 Copper Tube
2.5.4 Joints and Fittings For Copper Tube
2.5.5 Valves
2.5.5.1 Gate Valves
2.5.5.2 Globe Valves
2.5.5.3 Check Valves
2.5.5.4 Angle Valves
2.5.5.5 Ball Valves
2.5.5.6 Butterfly Valves
2.5.5.7 Balancing Valves
2.5.5.8 Air Vents
2.5.6 Strainers
2.5.7 Chilled Water System Accessories
2.5.8 Water or Steam Heating System Accessories
2.5.9 Glycol
2.5.10 Backflow Preventers
2.5.11 Flexible Pipe Connectors
2.5.12 Pressure Gauges
2.5.13 Thermometers
2.5.14 Escutcheons
2.5.15 Pipe Hangers, Inserts, and Supports
2.5.16 Expansion Joints

2.5.16.1 Slip Joints
2.5.16.2 Flexible Ball Joints
2.5.16.3 Bellows Type Joints
2.5.17 Insulation
2.5.18 Condensate Drain Lines
2.6 ELECTRICAL WORK
2.7 CONTROLS
2.8 DUCTWORK COMPONENTS
2.8.1 Metal Ductwork
2.8.1.1 Transitions
2.8.1.2 Metallic Flexible Duct
2.8.1.3 Insulated Nonmetallic Flexible Duct Runouts
2.8.1.4 General Service Duct Connectors
2.8.1.5 High Temperature Service Duct Connections
2.8.2 Fibrous Glass Ductwork
2.8.3 Ductwork Accessories
2.8.3.1 Duct Access Doors
2.8.3.2 Fire Dampers
2.8.3.3 Splitters and Manual Balancing Dampers
2.8.3.4 Air Deflectors and Branch Connections
2.8.4 Duct Sleeves, Framed Prepared Openings, Closure Collars
2.8.4.1 Duct Sleeves
2.8.4.2 Framed Prepared Openings
2.8.4.3 Closure Collars
2.8.5 Plenums and Casings for Field-Fabricated Units
2.8.5.1 Plenum and Casings
2.8.5.2 Casing
2.8.5.3 Access Doors
2.8.5.4 Factory-Fabricated Insulated Sheet Metal Panels
2.8.5.5 Duct Liner
2.8.6 Sound Attenuation Equipment
2.8.7 Diffusers, Registers, and Grilles
2.8.7.1 Diffusers
2.8.7.2 Registers and Grilles
2.8.8 Louvers
2.8.9 Air Vents, Penthouses, and Goosenecks
2.8.10 Bird Screens and Frames
2.8.11 Radon Exhaust Ductwork
2.9 AIR SYSTEMS EQUIPMENT
2.9.1 Fans
2.9.1.1 Centrifugal Fans
2.9.1.2 In-Line Centrifugal Fans
2.9.1.3 Axial Flow Fans
2.9.1.4 Panel Type Power Wall Ventilators
2.9.1.5 Centrifugal Type Power Wall Ventilators
2.9.1.6 Centrifugal Type Power Roof Ventilators
2.9.1.7 Propeller Type Power Roof Ventilators
2.9.1.8 Air-Curtain Fans
2.9.1.9 Ceiling Exhaust Fans
2.9.2 Coils
2.9.2.1 Direct-Expansion Coils
2.9.2.2 Water Coils
2.9.2.3 Steam Heating Coils
2.9.2.4 Steam Preheat (Nonfreeze) Coils
2.9.3 Air Filters
2.9.3.1 Extended Surface Pleated Panel Filters
2.9.3.2 Extended Surface Nonsupported Pocket Filters
2.9.3.3 Sectional Cleanable Filters
2.9.3.4 Replaceable Media Filters

2.9.3.5 Automatic Renewable Media Filters
2.9.3.6 Electrostatic Filters
2.9.3.7 High-Efficiency Particulate Air (HEPA) Filters
2.9.3.8 Range and Griddle Hood Service
2.9.3.9 Holding Frames
2.9.3.10 Filter Gauges
2.10 AIR HANDLING UNITS
2.10.1 Field-Fabricated Air Handling Units
2.10.2 Factory-Fabricated Air Handling Units
2.10.2.1 Casings
2.10.2.2 Heating and Cooling Coils
2.10.2.3 Cooling Coils, Spray Type
2.10.2.4 Air Filters
2.10.2.5 Fans
2.10.2.6 Access Sections and Filter/Mixing Boxes
2.10.2.7 Diffuser Sections
2.10.2.8 Dampers
2.11 TERMINAL UNITS
2.11.1 Room Fan-Coil Units
2.11.1.1 Enclosures
2.11.1.2 Fans
2.11.1.3 Coils
2.11.1.4 Drain Pans
2.11.1.5 Manually Operated Outside Air Dampers
2.11.1.6 Filters
2.11.1.7 Motors
2.11.2 Coil Induction Units
2.11.2.1 Enclosures
2.11.2.2 Air Plenums
2.11.2.3 Coils
2.11.2.4 Screens
2.11.2.5 Drain Pan
2.11.3 Variable Air Volume (VAV) and Dual Duct Terminal Units
2.11.3.1 Constant Volume, Single Duct
2.11.3.2 Variable Volume, Single Duct
2.11.3.3 Variable Volume, Single Duct, Fan-Powered
2.11.3.4 Dual Duct Terminal Units
2.11.3.5 Ceiling Induction Unit
2.11.3.6 Reheat Units
2.11.4 Unit Ventilators
2.11.4.1 Enclosures
2.11.4.2 Electric Resistance Heating Elements
2.11.4.3 Fans
2.11.4.4 Coils
2.11.4.5 Drain Pans
2.11.4.6 Filters
2.11.4.7 Dampers
2.11.4.8 Motors
2.11.4.9 Outside Air Intakes
2.12 ENERGY RECOVERY DEVICES
2.12.1 Rotary Wheel
2.12.2 Run-Around-Coil
2.12.3 Heat Pipe
2.13 FACTORY PAINTING

PART 3 EXECUTION

3.1 INSTALLATION
3.1.1 Piping

3.1.1.1 Joints
3.1.1.2 Grooved Mechanical Joints
3.1.1.3 Flanges and Unions
3.1.2 Supports
3.1.2.1 General
3.1.2.2 Seismic Requirements (Pipe Supports and Structural Bracing)
3.1.2.3 Pipe Hangers, Inserts and Supports
3.1.3 Anchors
3.1.4 Pipe Sleeves
3.1.4.1 Roof and Floor Sleeves
3.1.4.2 Fire Seal
3.1.4.3 Escutcheons
3.1.5 Condensate Drain Lines
3.1.6 Pipe-Alignment Guides
3.1.7 Air Vents and Drains
3.1.7.1 Vents
3.1.7.2 Drains
3.1.8 Valves
3.1.9 Equipment and Installation
3.1.10 Access Panels
3.1.11 Flexible Connectors
3.1.12 Sleeved and Framed Openings
3.1.13 Metal Ductwork
3.1.13.1 Underground Ductwork
3.1.13.2 Radon Exhaust Ductwork
3.1.13.3 Light Duty Corrosive Exhaust Ductwork
3.1.14 Fibrous Glass Ductwork
3.1.15 FRP Ductwork
3.1.16 Kitchen Exhaust Ductwork
3.1.16.1 Ducts Conveying Smoke and Grease Laden Vapors
3.1.16.2 Exposed Ductwork
3.1.16.3 Concealed Ducts Conveying Moisture Laden Air
3.1.17 Acoustical Duct Lining
3.1.18 Dust Control
3.1.19 Insulation
3.1.20 Duct Test Holes
3.1.21 Power Roof Ventilator Mounting
3.1.22 Power Transmission Components Adjustment
3.2 FIELD PAINTING AND PIPING IDENTIFICATION
3.3 PIPING HYDROSTATIC TEST
3.4 DUCTWORK LEAK TEST
3.5 CLEANING AND ADJUSTING
3.6 TESTING, ADJUSTING, AND BALANCING
3.7 PERFORMANCE TESTS
3.8 FIELD TRAINING

-- End of Section Table of Contents --

SECTION 15895

AIR SUPPLY, DISTRIBUTION, VENTILATION, AND EXHAUST SYSTEM

PART 1 GENERAL

1.1 REFERENCES

The publications listed below form a part of this specification to the extent referenced. The publications are referred to in the text by basic designation only.

AIR CONDITIONING AND REFRIGERATION INSTITUTE (ARI)

ARI 350	(1986) Sound Rating of Non-Ducted Indoor Air-Conditioning Equipment
ARI 410	(1991) Forced-Circulation Air-Cooling and Air-Heating Coils
ARI 430	(1989) Central-Station Air-Handling Units
ARI 440	(1993) Room Fan-Coil and Unit Ventilator
ARI 445	(1987; R 1993) Room Air-Induction Units
ARI 880	(1990) Air Terminals
ARI Guideline D	(1987) Application and Installation of Central Station Air-Handling Units

AIR CONDITIONING CONTRACTORS OF AMERICA (ACCA)

ACCA Manual 4	(1990) Installation Techniques for Perimeter Heating & Cooling; 11th Edition

AIR MOVEMENT AND CONTROL ASSOCIATION (AMCA)

AMCA 210	(1985) Laboratory Methods of Testing Fans for Rating
AMCA 300	(1996) Reverberant Room Method for Sound Testing of Fans

AMERICAN BEARING MANUFACTURERS ASSOCIATION (ABEMA)

ABEMA 9	(1990) Load Ratings and Fatigue Life for Ball Bearings
ABEMA 11	(1990) Load Ratings and Fatigue Life for Roller Bearings

AMERICAN NATIONAL STANDARDS INSTITUTE (ANSI)

ANSI S12.32	(1990) Precision Methods for the Determination of Sound Power Levels of

	Discrete-Frequency and Narrow-Band Noise Sources in Reverberation Rooms

AMERICAN SOCIETY FOR TESTING AND MATERIALS (ASTM)

ASTM A 47	(1990) Ferritic Malleable Iron Castings
ASTM A 53	(1993a) Pipe, Steel, Black and Hot-Dipped, Zinc-Coated Welded and Seamless
ASTM A 106	(1994) Seamless Carbon Steel Pipe for High-Temperature Service
ASTM A 123	(1989a) Zinc (Hot-Dip Galvanized) Coatings on Iron and Steel Products
ASTM A 167	(1993) Stainless and Heat-Resisting Chromium-Nickel Steel Plate, Sheet, and Strip
ASTM A 181	(1995b) Forgings, Carbon Steel, for General-Purpose Piping
ASTM A 183	(1983; R 1990) Carbon Steel Track Bolts and Nuts
ASTM A 234	(1996) Piping Fittings of Wrought Carbon Steel and Alloy Steel for Moderate and Elevated Temperatures
ASTM A 733	(1993) Welded and Seamless Carbon Steel and Austenitic Stainless Steel Pipe Nipples
ASTM A 924	(1994) General Requirements for Steel Sheet, Metallic-Coated by the Hot-Dip Process
ASTM B 62	(1993) Composition Bronze or Ounce Metal Castings
ASTM B 75	(1993) Seamless Copper Tube
ASTM B 88	(1993a) Seamless Copper Water Tube
ASTM B 117	(1994) Operating Salt Spray (Fog) Testing Apparatus
ASTM B 650	(1995) Electrodeposited Engineering Chromium Coatings of Ferrous Substrates
ASTM C 1071	(1991) Thermal and Acoustical Insulation (Glass Fiber, Duct Lining Material)
ASTM D 520	(1984; R 1989) Zinc Dust Pigment
ASTM D 1384	(1994) Corrosion Test for Engine Coolants in Glassware
ASTM D 1654	(1992) Evaluation of Painted or Coated

	Specimens Subjected to Corrosive Environments
ASTM D 1785	(1994) Poly(Vinyl Chloride) (PVC) Plastic Pipe, Schedules 40, 80, and 120
ASTM D 2466	(1994a) Poly(Vinyl Chloride) (PVC) Plastic Pipe Fittings, Schedule 40
ASTM D 2564	(1993) Solvent Cements for Poly(Vinyl Chloride) (PVC) Plastic Piping Systems
ASTM D 2855	(1993) Making Solvent-Cemented Joints with Poly(Vinyl Chloride) (PVC) Pipe and Fittings
ASTM D 3359	(1995) Measuring Adhesion by Tape Test
ASTM E 84	(1994) Surface Burning Characteristics of Building Materials
ASTM E 437	(1992) Industrial Wire Cloth and Screens (Square Opening Series)
ASTM F 872	(1984; R 1990) Filter Units, Air-Conditioning: Viscous-Impingement Type, Cleanable
ASTM F 1199	(1988; R 1993) Cast (All Temperature and Pressures) and Welded Pipe Line Strainers (150 psig and 150 degrees F Maximum)
ASTM F 1200	(1988; R 1993) Fabricated (Welded) Pipe Line Strainers (Above 150 psig and 150 degrees F)

AMERICAN SOCIETY OF HEATING, REFRIGERATING AND AIR-CONDITIONING ENGINEERS (ASHRAE)

ASHRAE 15	(1994) Safety Code for Mechanical Refrigeration
ASHRAE 52.1	(1992) Gravimetric and Dust-Spot Procedures for Testing Air-Cleaning Devices Used in General Ventilation for Removing Particulate Matter
ASHRAE 68	(1986) Laboratory Method of Testing In-Duct Sound Power Measurement Procedures for Fans
ASHRAE 70	(1991) Method of Testing Rating the Performance of Air Outlets and Inlets
ASHRAE 84	(1991) Method of Testing Air-to-Air Heat Exchangers

AMERICAN SOCIETY OF MECHANICAL ENGINEERS (ASME)

ASME B1.20.1	(1983; R 1992) Pipe Threads, General Purpose (Inch)
ASME B16.3	(1992) Malleable Iron Threaded Fittings
ASME B16.5	(1988; Errata Oct 88; B16.5a) Pipe Flanges and Flanged Fittings
ASME B16.9	(1993) Factory-Made Wrought Steel Buttwelding Fittings
ASME B16.18	(1984; R 1994) Cast Copper Alloy Solder Joint Pressure Fittings
ASME B16.22	(1989) Wrought Copper and Copper Alloy Solder Joint Pressure Fittings
ASME B16.26	(1988) Cast Copper Alloy Fittings for Flared Copper Tubes
ASME B31.1	(1995) Power Piping
ASME B40.1	(1991) Gauges - Pressure Indicating Dial Type - Elastic Element
ASME BPV IX	(1995; Addenda Dec 1995) Boiler and Pressure Vessel Code; Section IX, Welding and Brazing Qualifications

AMERICAN WATER WORKS ASSOCIATION (AWWA)

AWWA C606	(1987) Grooved and Shouldered Joints

AMERICAN WELDING SOCIETY (AWS)

AWS D1.1	(1994) Structural Welding Code - Steel

COMMERCIAL ITEM DESCRIPTIONS (CID)

CID A-A-1419	(Rev D) Filter Element, Air Conditioning (Viscous-Impingement and Dry Types, Replaceable)

EXPANSION JOINT MANUFACTURERS ASSOCIATION (EJMA)

EJMA-01	(1993) EJMA Standards

INSTITUTE OF ENVIRONMENTAL SCIENCES (IES)

IES RP-CC-001.3	(1993) HEPA and ULPA Filters

MANUFACTURERS STANDARDIZATION SOCIETY OF THE VALVE AND FITTINGS INDUSTRY (MSS)

MSS SP-25	(1993) Standard Marking System for Valves, Fittings, Flanges and Unions
MSS SP-58	(1993) Pipe Hangers and Supports - Materials, Design and Manufacture

MSS SP-69	(1991) Pipe Hangers and Supports - Selection and Application
MSS SP-70	(1990) Cast Iron Gate Valves, Flanged and Threaded Ends
MSS SP-71	(1990) Cast Iron Swing Check Valves, Flanged and Threaded Ends
MSS SP-72	(1992) Ball Valves with Flanged or Butt-Welding Ends for General Service
MSS SP-80	(1987) Bronze Gate, Globe, Angle and Check Valves
MSS SP-85	(1994) Cast Iron Globe & Angle Valves, Flanged and Threaded Ends
MSS SP-110	(1991) Ball Valves Threaded, Socket-Welding, Solder Joint, Grooved and Flared Ends

NATIONAL FIRE PROTECTION ASSOCIATION (NFPA)

NFPA 70	(1996) National Electrical Code
NFPA 90A	(1993) Installation of Air Conditioning and Ventilating Systems
NFPA 96	(1994) Installation of Equipment for the Removal of Smoke and Grease-Laden Vapors from Commercial Cooking Equipment

NORTH AMERICAN INSULATION MANUFACTURERS ASSOCIATION (NAIMA)

NAIMA-01	(1993) Fibrous Glass Duct Construction Standards

SHEET METAL AND AIR CONDITIONING CONTRACTORS' NATIONAL ASSOCIATION (SMACNA)

SMACNA-01	(1975) Accepted Industry Practice for Industrial Duct Construction
SMACNA-05	(1992) Fire, Smoke and Radiation Damper Installation Guide for HVAC Systems
SMACNA-06	(1995) HVAC Duct Construction Standards - Metal and Flexible
SMACNA-10	(1985) HVAC Air Duct Leakage Test Manual

UNDERWRITERS LABORATORIES (UL)

UL-01	(1996; Supple) Building Materials Directory
UL-03	(1996; Supple) Electrical Construction Materials Directory

UL-05	(1996; Supple) Fire Resistance Directory (3 Vol.)
UL 94	(1991; R thru Apr 1995) Tests for Flammability of Plastic Materials for Parts in Devices and Appliances
UL 181	(1996; Rev Oct 1996) Factory-Made Air Ducts and Air Connectors
UL 214	(1993) Tests for Flame-Propagation of Fabrics and Films
UL 586	(1996) High-Efficiency, Particulate, Air Filter Units
UL 705	(1994; Rev thru Mar 1996) Power Ventilators
UL 723	(1993; Rev Apr 1994) Test for Surface Burning Characteristics of Building Materials
UL 900	(1994) Test Performance of Air Filter Units
UL 1995	(1995) Heating and Cooling Equipment

1.2 COORDINATION OF TRADES Ductwork, piping offsets, fittings, and accessories shall be furnished as required to provide a complete installation and to eliminate interference with other construction.

1.3 DELIVERY AND STORAGE

Equipment delivered and placed in storage shall be stored with protection from the weather, humidity and temperature variations, dirt and dust, or other contaminants.

1.4 SUBMITTALS

Government approval is required for submittals with a "GA" designation; submittals having an "FIO" designation are for information only. The following shall be submitted in accordance with Section 01330 SUBMITTAL PROCEDURES:

SD-01 Data

Components and Equipment Data; [_____].

Manufacturer's catalog data shall be included with the detail drawings for the following items. The data shall be highlighted to show model, size, options, etc., that are intended for consideration. Data shall be adequate to demonstrate compliance with contract requirements for the following:

a. Piping Components

b. Ductwork Components

c. Air Systems Equipment

d. Air Handling Units

e. Energy Recovery Devices

f. Terminal Units

SD-04 Drawings

Air Supply, Distribution, Ventilation, and Exhaust Equipment; [_____].

Drawings shall consist of equipment layout including assembly and installation details and electrical connection diagrams; ductwork layout showing the location of all supports and hangers, typical hanger details, gauge reinforcement, reinforcement spacing rigidity classification, and static pressure and seal classifications; and piping layout showing the location of all guides and anchors, the load imposed on each support or anchor, and typical support details. Drawings shall include any information required to demonstrate that the system has been coordinated and will properly function as a unit and shall show equipment relationship to other parts of the work, including clearances required for operation and maintenance.

SD-06 Instructions

Test Procedures; [_____].

Proposed test procedures for piping hydrostatic test, ductwork leak test, and performance tests of systems, at least 2 weeks prior to the start of related testing.

Welding Procedures; [_____].

A copy of qualified welding procedures, at least 2 weeks prior to the start of welding operations.

System Diagrams; GA.

Proposed diagrams, at least 2 weeks prior to start of related testing. System diagrams that show the layout of equipment, piping, and ductwork, and typed condensed operation manuals explaining preventative maintenance procedures, methods of checking the system for normal, safe operation, and procedures for safely starting and stopping the system shall be framed under glass or laminated plastic. After approval, these items shall be posted where directed.

SD-07 Schedules

Test Schedules; [_____].

Proposed test schedules for hydrostatic test of piping, ductwork leak test, and performance tests, at least 2 weeks prior to the start of related testing.

Field Training Schedule; [_____].

Proposed schedule for field training, at least 2 weeks prior to the start of related training.

SD-08 Statements

Similar Services; [_____].

Statement demonstrating successful completion of similar services on at least 5 projects of similar size and scope, at least 2 weeks prior to submittal of other items required by this section.

Welding Qualification; [_____].

A list of names and identification symbols of qualified welders and welding operators, at least 2 weeks prior to the start of welding operations.

SD-09 Reports

Test Reports; [_____].

Test reports for the piping hydrostatic test, ductwork leak test, and performance tests in booklet form, upon completion of testing. Reports shall document phases of tests performed including initial test summary, repairs/adjustments made, and final test results.

SD-13 Certificates

Bolts; [_____].

Written certification from the bolt manufacturer that the bolts furnished comply with the requirements of this specification. The certification shall include illustrations of product markings, and the number of each type of bolt to be furnished.

SD-19 Operation and Maintenance Manuals

Air Supply, Distribution, Ventilation, and Exhaust Manuals; [_____].

[Six] [_____] manuals listing step-by-step procedures required for system startup, operation, shutdown, and routine maintenance, at least 2 weeks prior to field training. The manuals shall include the manufacturer's name, model number, parts list, list of parts and tools that should be kept in stock by the owner for routine maintenance including the name of a local supplier, simplified wiring and controls diagrams, troubleshooting guide, and recommended service organization (including address and telephone number) for each item of equipment. Each service organization submitted shall be capable of providing [4] [_____] hour onsite response to a service call on an emergency basis.

PART 2 PRODUCTS

2.1 STANDARD PRODUCTS

Components and equipment shall be standard products of a manufacturer regularly engaged in the manufacturing of products that are of a similar material, design and workmanship. The standard products shall have been in satisfactory commercial or industrial use for 2 years before bid opening. The 2-year experience shall include applications of components and equipment under similar circumstances and of similar size. The 2 years must be satisfactorily completed by a product which has been sold or is offered for sale on the commercial market through advertisements, manufacturers' catalogs, or brochures. Products having less than a 2-year

field service record will be acceptable if a certified record of satisfactory field operation, for not less than 6000 hours exclusive of the manufacturer's factory tests, can be shown. The equipment items shall be supported by a service organization.

2.2 ASBESTOS PROHIBITION

Asbestos and asbestos-containing products shall not be used.

2.3 NAMEPLATES

Equipment shall have a nameplate that identifies the manufacturer's name, address, type or style, model or serial number, and catalog number.

2.4 EQUIPMENT GUARDS AND ACCESS

Belts, pulleys, chains, gears, couplings, projecting setscrews, keys, and other rotating parts exposed to personnel contact shall be fully enclosed or guarded according to OSHA requirements. High temperature equipment and piping exposed to contact by personnel or where it creates a potential fire hazard shall be properly guarded or covered with insulation of a type specified. [Catwalks,] [operating platforms,] [ladders,] [and] [guardrails] shall be provided where shown and shall be constructed according to Section 05500 MISCELLANEOUS METAL.

2.5 PIPING COMPONENTS

2.5.1 Steel Pipe

Steel pipe shall conform to ASTM A 53, Schedule 40, Grade A or B, Type E or S.

2.5.2 Joints and Fittings For Steel Pipe

Joints shall be welded, flanged, threaded, or grooved as indicated. If not otherwise indicated, piping 25 mm (1 inch) and smaller shall be threaded; piping larger than 25 mm (1 inch) and smaller than 80 mm (3 inches) shall be either threaded, grooved, or welded; and piping 80 mm (3 inches) and larger shall be grooved, welded, or flanged. Rigid grooved mechanical joints and fittings may only be used in serviceable aboveground locations where the temperature of the circulating medium does not exceed 110 degrees C. Flexible grooved joints shall be used only as a flexible connector with grooved pipe system. Unless otherwise specified, grooved piping components shall meet the corresponding criteria specified for the similar welded, flanged, or threaded component specified herein. The manufacturer of each fitting shall be permanently identified on the body of the fitting according to MSS SP-25.

2.5.2.1 Welded Joints and Fittings

Welded fittings shall conform to ASTM A 234, and shall be identified with the appropriate grade and marking symbol. Butt-welded fittings shall conform to ASME B16.9. Socket-welded fittings shall conform to ASME B16.11.

2.5.2.2 Flanged Joints and Fittings

Flanges shall conform to ASTM A 181 and ASME B16.5, Class 150. Gaskets shall be nonasbestos compressed material according to ASME B16.21, 2.0 mm thickness, full face or self-centering flat ring type. The gaskets shall

contain aramid fibers bonded with styrene butadiene rubber (SBR) or nitrile butadiene rubber (NBR). Bolts, nuts, and bolt patterns shall conform to ASME B16.5. Bolts shall be high or intermediate strength material conforming to ASTM A 193.

2.5.2.3 Threaded Joints and Fittings

Threads shall conform to ASME B1.20.1. Unions shall conform to ASME B16.39, Class 150. Nipples shall conform to ASTM A 733. Malleable iron fittings shall conform to ASME B16.3, type as required to match piping.

2.5.2.4 Dielectric Unions and Flanges

Dielectric unions shall have the tensile strength and dimensional requirements specified. Unions shall have metal connections on both ends threaded to match adjacent piping. Metal parts of dielectric unions shall be separated with a nylon insulator to prevent current flow between dissimilar metals. Unions shall be suitable for the required operating pressures and temperatures. Dielectric flanges shall provide the same pressure ratings as standard flanges and provide complete electrical isolation.

2.5.2.5 Grooved Mechanical Joints and Fittings

Joints and fittings shall be designed for not less than 862 kPa (125 psig) service and shall be the product of the same manufacturer. Fitting and coupling houses shall be malleable iron conforming to ASTM A 47, Grade 32510; ductile iron conforming to ASTM A 536, Grade 65-45-12; or steel conforming to ASTM A 106, Grade B or ASTM A 53. Gaskets shall be molded synthetic rubber with central cavity, pressure responsive configuration and shall conform to ASTM D 2000 Grade No. 2CA615A15B44F17Z for circulating medium up to 110 degrees C or Grade No. M3BA610A15B44Z for circulating medium up to 93 degrees C. Grooved joints shall conform to AWWA C606. Coupling nuts and bolts shall be steel and shall conform to ASTM A 183.

2.5.3 Copper Tube

Copper tube shall conform to ASTM B 88, Type K or L.

2.5.4 Joints and Fittings For Copper Tube

Wrought copper and bronze solder-joint pressure fittings shall conform to ASME B16.22 and ASTM B 75. Cast copper alloy solder-joint pressure fittings shall conform to ASME B16.18. Cast copper alloy fittings for flared copper tube shall conform to ASME B16.26 and ASTM B 62. Brass or bronze adapters for brazed tubing may be used for connecting tubing to flanges and to threaded ends of valves and equipment. Extracted brazed tee joints produced with an acceptable tool and installed as recommended by the manufacturer may be used.

2.5.5 Valves

Valves shall be Class 125 and shall be suitable for the intended application. Valves shall meet the material, fabrication and operating requirements of ASME B31.1. Chain operators shall be provided for valves located 3 meters or higher above the floor. Valves in sizes larger than 25 mm (1 inch) and used on steel pipe systems, may be provided with rigid grooved mechanical joint ends. Such grooved end valves shall be subject to the same requirements as rigid grooved mechanical joints and fittings and,

shall be provided by the same manufacturer as the grooved pipe joint and fitting system.

2.5.5.1 Gate Valves

Gate valves 65 mm (2-1/2 inches) and smaller shall conform to MSS SP-80 and shall be bronze with rising stem and threaded, solder, or flanged ends. Gate valves 80 mm (3 inches) and larger shall conform to MSS SP-70 and shall be cast iron with bronze trim, outside screw and yoke, and flanged or threaded ends.

2.5.5.2 Globe Valves

Globe valves 65 mm (2-1/2 inches) and smaller shall conform to MSS SP-80, bronze, threaded, soldered, or flanged ends. Globe valves 80 mm (3 inches) and larger shall conform to MSS SP-85 and shall be cast iron with bronze trim and flanged, or threaded ends.

2.5.5.3 Check Valves

Check valves 65 mm (2-1/2 inches) and smaller shall conform to MSS SP-80 and shall be bronze with threaded, soldered, or flanged ends. Check valves 80 mm (3 inches) and larger shall conform to MSS SP-71 and shall be cast iron with bronze trim and flanged or threaded ends.

2.5.5.4 Angle Valves

Angle valves 65 mm (2-1/2 inches) and smaller shall conform to MSS SP-80 and shall be bronze with threaded, soldered, or flanged ends. Angle valves 80 mm (3 inches) and larger shall conform to MSS SP-85 and shall be cast iron with bronze trim and flanged, or threaded ends.

2.5.5.5 Ball Valves

Ball valves 15 mm (1/2 inch) and larger shall conform to [MSS SP-72] [or] [MSS SP-110], and shall be ductile iron or bronze with threaded, soldered, or flanged ends.

2.5.5.6 Butterfly Valves

Butterfly valves shall be 2 flange or lug wafer type, and shall be bubble-tight at 1.03 MPa. Valve bodies shall be cast iron, malleable iron, or steel. ASTM A 167, Type 404 or Type 316, corrosion resisting steel stems, bronze or corrosion resisting steel discs, and synthetic rubber seats shall be provided. Valves smaller than 200 mm (8 inches) shall have throttling handles with a minimum of seven locking positions. Valves 200 mm (8 inches) and larger shall have totally enclosed manual gear operators with adjustable balance return stops and position indicators. Valves in insulated lines shall have extended neck to accommodate insulation thickness.

2.5.5.7 Balancing Valves

Balancing valves 50 mm (2 inches) or smaller shall be bronze with NPT connections for black steel pipe and brazed connections for copper tubing. Valves 25 mm or larger may be all iron with threaded or flanged ends. The valves shall have a square head or similar device and an indicator arc and shall be designed for 120 degrees C. Iron valves shall be lubricated, nonlubricated, or tetrafluoroethylene resin-coated plug valves. In lieu of

plug valves, ball valves may be used. Plug valves and ball valves 200 mm (8 inches) or larger shall be provided with manual gear operators with position indicators. [In lieu of balancing valves specified] [Where indicated], automatic flow control valves may be provided to maintain constant flow, and shall be designed to be sensitive to pressure differential across the valve to provide the required opening. Valves shall be selected for the flow required and provided with a permanent nameplate or tag carrying a permanent record of the factory-determined flow rate and flow control pressure levels. Valves shall control the flow within 5 percent of the tag rating. Valves shall be suitable for the maximum operating pressure of 862 kPa (125 psig) or 150 percent of the system operating pressure, whichever is the greater. Where the available system pressure is not adequate to provide the minimum pressure differential that still allows flow control, the system pump head capability shall be appropriately increased. Where flow readings are provided by remote or portable meters, valve bodies shall be provided with tapped openings and pipe extensions with shutoff valves outside of pipe insulation. The pipe extensions shall be provided with quick connecting hose fittings for a portable meter to measure the pressure differential across the automatic flow control valve. A portable meter furnished with accessory kit as recommended by the automatic valve manufacturer shall be provided. Automatic flow control valve specified may be substituted for venturi tubes or orifice plate flow measuring devices.

2.5.5.8 Air Vents

Manual air vents shall be brass or bronze valves or cocks suitable for pressure rating of piping system and furnished with threaded plugs or caps. Automatic air vents shall be float type, cast iron, stainless steel, or forged steel construction, suitable for pressure rating of piping system.

2.5.6 Strainers

Strainer shall be in accordance with [ASTM F 1199] [ASTM F 1200], except as modified herein. Strainer shall be the cleanable, basket or "Y" type, the same size as the pipeline. The strainer bodies shall be fabricated of cast iron with bottoms drilled, and tapped. The bodies shall have arrows clearly cast on the sides indicating the direction of flow. Each strainer shall be equipped with removable cover and sediment screen. The screen shall be made of minimum 0.8 mm (22 gauge) [brass sheet,] [monel,] [corrosion-resistant steel,] with small perforations numbering not less than 60 per square centimeter (400 per square inch) to provide a net free area through the basket of at least 3,300 times that of the entering pipe. The flow shall be into the screen and out through the perforations.

2.5.7 Chilled Water System Accessories

Chilled water system accessories such as pumps, combination strainer and suction diffusers, and expansion tanks shall be as specified in Section [15650 CENTRAL REFRIGERATED AIR CONDITIONING SYSTEM] [15653AIR-CONDITIONING SYSTEM (UNITARY TYPE)].

2.5.8 Water or Steam Heating System Accessories

Water or steam heating accessories such as expansion tanks and steam traps shall be as specified in Section 15569 WATER AND STEAM HEATING; OIL, GAS OR BOTH; UP TO 20 MBTUH.

2.5.9 Glycol

The glycol shall be tested according to ASTM D 1384 and shall cause less than 0.0125 mm penetration per year for all system metals. The glycol shall contain corrosion inhibitors. Silicon based inhibitors shall not be used. The solution shall be compatible with all wetted items within the system.

2.5.10 Backflow Preventers

Backflow preventers shall be according to Section 15400 PLUMBING, GENERAL PURPOSE.

2.5.11 Flexible Pipe Connectors

Flexible pipe connectors shall be designed for 862 kPa (125 psi) or 1034 kPa (150 psi) service as appropriate for the static head plus the system head, and 120 degrees C, 110 degrees C for grooved end flexible connectors. The flexible section shall be constructed of rubber, tetrafluoroethylene resin, or corrosion-resisting steel, bronze, monel, or galvanized steel. The flexible section shall be suitable for intended service with end connections to match adjacent piping. Flanged assemblies shall be equipped with limit bolts to restrict maximum travel to the manufacturer's standard limits. Unless otherwise indicated, the length of the flexible connectors shall be as recommended by the manufacturer for the service intended. Internal sleeves or liners, compatible with circulating medium, shall be provided when recommended by the manufacturer. Covers to protect the bellows shall be provided where indicated.

2.5.12 Pressure Gauges

Gauges shall conform to ASME B40.1 and shall be provided with throttling type needle valve or a pulsation dampener and shut-off valve. Gauge shall be a minimum of 85 mm in diameter and shall have a range from 0 kPa to approximately 1.5 times the maximum system working pressure.

2.5.13 Thermometers

Thermometers shall have brass, malleable iron, or aluminum alloy case and frame, clear protective face, permanently stabilized glass tube with indicating-fluid column, white face, black numbers, and a 225 mm (9 inch) scale, and shall have rigid stems with straight, angular, or inclined pattern.

2.5.14 Escutcheons

Escutcheons shall be chromium-plated iron or chromium-plated brass, either one piece or split pattern, held in place by internal spring tension or setscrews.

2.5.15 Pipe Hangers, Inserts, and Supports

Pipe hangers, inserts, and supports shall conform to MSS SP-58 and MSS SP-69.

2.5.16 Expansion Joints

2.5.16.1 Slip Joints

Expansion joints shall provide for either single or double slip of the connected pipes, as required or indicated, and for not less than the

traverse indicated. The joints shall be designed for working temperature and pressure suitable for the application, but not less than 1034 kPa (150 psig), and shall be according to applicable requirements of EJMA-01 and ASME B31.1. End connections shall be flanged or beveled for welding as indicated. Joint shall be provided with an anchor base where required or indicated. Where adjoining pipe is carbon steel, the sliding slip shall be seamless steel plated with a minimum of 0.058 mm of hard chrome according to ASTM B 650. All joint components shall be suitable for the intended service. Initial setting shall be made according to the manufacturer's recommendations to compensate for ambient temperature at time of installation. Pipe alignment guides shall be installed as recommended by the joint manufacturer, but in any case shall be not more than 1.5 m from expansion joint except that in lines 100 mm (4 inches) or smaller, guides shall be installed not more than 600 mm from the joint. Service outlets shall be provided where indicated.

2.5.16.2 Flexible Ball Joints

Flexible ball joints shall conform to EJMA-01 and ASME B31.1 and be constructed of alloys as appropriate for the service intended. Where so indicated, the ball joint shall be designed for packing injection under full line pressure to contain leakage. The joint ends shall be threaded to 50 mm (2 inches) only, grooved, flanged, or beveled for welding as indicated or required and shall be capable of absorbing a minimum of 15-degree angular flex and 360 degree rotation. Balls and sockets shall be suitable for the intended service. The exterior spherical surface of carbon steel balls shall be plated with mils of hard chrome according to ASTM B 650. The ball type joints shall be designed and constructed according to EJMA-01 and ASME B31.1 where applicable. Where required, flanges shall conform to ASME B16.5.

2.5.16.3 Bellows Type Joints

Bellows type joints shall be flexible, guided expansion joints. The expansion element shall be stabilized corrosion resistant steel. Bellows type expansion joints shall conform to the applicable requirements of EJMA-01 with internal sleeves. Guiding of piping on both sides of expansion joint shall be according to the published recommendations of the manufacturer of the expansion joint. The joints shall be designed for the working temperature and pressure suitable for the application but not less than 1034 kPa (150 psig).

2.5.17 Insulation

Shop and field applied insulation shall be as specified in Section 15250 THERMAL INSULATION FOR MECHANICAL SYSTEMS.

2.5.18 Condensate Drain Lines

Condensate drainage shall be provided for each item of equipment that generates condensate as specified for drain, waste, and vent piping systems in Section 15400 PLUMBING, GENERAL PURPOSE.

2.6 ELECTRICAL WORK

Electrical motor-driven equipment specified shall be provided complete with motor, motor starter, and controls. Unless otherwise specified, electric equipment, including wiring and motor efficiencies, shall be according to Section 16415 ELECTRICAL WORK, INTERIOR. Electrical characteristics and

enclosure type shall be as shown. Unless otherwise indicated, motors of 745 W and above shall be high efficiency type. Motor starters shall be provided complete with thermal overload protection and other appurtenances necessary. Each motor shall be according to NEMA MG 1 and shall be of sufficient size to drive the equipment at the specified capacity without exceeding the nameplate rating of the motor. Manual or automatic control and protective or signal devices required for the operation specified, and any control wiring required for controls and devices, but not shown, shall be provided. Where two-speed or variable-speed motors are indicated, solid-state variable-speed controller may be provided to accomplish the same function. Solid-state variable-speed controllers shall be utilized for motors rated 7.45 kW (10 hp) or less. Adjustable frequency drives shall be used for larger motors.

2.7 CONTROLS

Controls shall be provided as specified in Section 15950 HEATING, VENTILATING AND AIR CONDITIONING (HVAC) CONTROL SYSTEMS.

2.8 DUCTWORK COMPONENTS

2.8.1 Metal Ductwork

All aspects of metal ductwork construction, including all fittings and components, shall comply with SMACNA-06 unless otherwise specified. Elbows shall be radius type with a centerline radius of 1-1/2 times the width or diameter of the duct where space permits. Otherwise, elbows having a minimum radius equal to the width or diameter of the duct or square elbows with factory fabricated turning vanes may be used. Static pressure Class 125, 250, and 500 Pa (1/2, 1, and 2 inch w.g.) ductwork shall meet the requirements of Seal Class C. Class 750 through 2500 Pa (3 through 10 inch) shall meet the requirements of Seal Class A. Sealants shall conform to fire hazard classification specified in Section 15250 THERMAL INSULATION FOR MECHANICAL SYSTEMS. Pressure sensitive tape shall not be used as a sealant. Spiral lock seam duct, and flat oval shall be made with duct sealant and locked with not less than 3 equally spaced drive screws or other approved methods indicated in SMACNA-06. The sealant shall be applied to the exposed male part of the fitting collar so that the sealer will be on the inside of the joint and fully protected by the metal of the duct fitting. One brush coat of the sealant shall be applied over the outside of the joint to at least 50 mm band width covering all screw heads and joint gap. Dents in the male portion of the slip fitting collar will not be acceptable. Outdoor air intake ducts and plenums shall be fabricated with watertight soldered or brazed joints and seams.

2.8.1.1 Transitions

Diverging air flow transitions shall be made with each side pitched out a maximum of 15 degrees, for an included angle of 30 degrees. Transitions for converging air flow shall be made with each side pitched in a maximum of 30 degrees, for an included angle of 60 degrees, or shall be as indicated. Factory-fabricated reducing fittings for systems using round duct sections when formed to the shape of the ASME short flow nozzle, need not comply with the maximum angles specified.

2.8.1.2 Metallic Flexible Duct

Metallic type duct shall be single-ply [galvanized steel] [Type 316 stainless steel] [two-ply aluminum] [, self supporting to 2.4 m spans].

Duct shall be of corrugated/interlocked, folded and knurled type seam construction, bendable without damage through 180 degrees with a throat radius equal to 1/2 duct diameter. Duct shall conform to UL 181and shall be rated for positive or negative working pressure of 3.75 kPa (15 inches water gauge) at 177 degrees C (350 degrees F) when duct is aluminum, and 343 degrees C (650 degrees F) when duct is galvanized steel or stainless steel.

2.8.1.3 Insulated Nonmetallic Flexible Duct Runouts

Flexible duct runouts shall be used only where indicated. Runout length shall be as shown on the drawings, but shall in no case exceed 3 m. Runouts shall be preinsulated, factory fabricated, and shall comply with NFPA 90A and UL 181. Either field or factory applied vapor barrier shall be provided. Where coil induction or high velocity units are supplied with vertical air inlets, a streamlined and vaned and mitered elbow transition piece shall be provided for connection to the flexible duct or hose. The last elbow to these units, other than the vertical air inlet type, shall be a die-stamped elbow and not a flexible connector. Insulated flexible connectors may be used as runouts. The insulated material and vapor barrier shall conform to the requirements of Section 15250 THERMAL INSULATION FOR MECHANICAL SYSTEMS. The insulation material surface shall not be exposed to the air stream.

2.8.1.4 General Service Duct Connectors

A flexible duct connector approximately 150 mm in width shall be provided where sheet metal connections are made to fans or where ducts of dissimilar metals are connected. For round/oval ducts, the flexible material shall be secured by stainless steel or zinc-coated, iron clinch-type draw bands. For rectangular ducts, the flexible material locked to metal collars shall be installed using normal duct construction methods. The composite connector system shall comply with UL 214 and be classified as "flame-retarded fabrics" in UL-01.

2.8.1.5 High Temperature Service Duct Connections

Material shall be approximately 2.38 mm thick, 1.2 to 1.36 kg per square meter (35 to 40-ounce per square yard) weight, plain weave fibrous glass cloth with, nickel/chrome wire reinforcement for service in excess of 650 degrees C.

2.8.2 Fibrous Glass Ductwork

Fibrous glass ductwork may be provided in lieu of sheet metal ductwork except that fibrous glass ductwork will not be allowed in fan and equipment rooms, where subject to traffic or weather damage, for outside air intakes, for risers of more than two stories, in kitchen or fume exhaust ducts, to convey solids or corrosive gases, in concrete, for burial below grade, as casings or housings, or in systems used for life support systems. Fibrous glass ductwork, including all components, shall be fabricated according to NAIMA-01 where the velocity and the static pressure are within its scope. Where the velocity or static pressure exceeds these limits, the ductwork manufacturer shall certify that the ductwork is intended for the velocities and pressures to be encountered, and that the proposed installation meets all performance criteria specified herein for metal ductwork. Fibrous glass ductwork shall have the thermal equivalent of the insulation specified for metal ductwork in Section 15250 THERMAL INSULATION FOR MECHANICAL SYSTEMS. Field or factory fabricated fibrous glass ductwork

shall conform to UL 181, Class 1. Duct wall penetrations, transverse joints and longitudinal seams shall be sealed as instructed by the manufacturer by one of the methods prescribed by NAIMA-01, where applicable, except that pressure sensitive tape shall not be used as a sealant. All items necessary for a complete installation shall be provided as specified for sheet metal duct systems.

2.8.3 Ductwork Accessories

2.8.3.1 Duct Access Doors

Access doors shall be provided in ductwork and plenums where indicated and at all air flow measuring primaries, automatic dampers, fire dampers, coils, thermostats, and other apparatus requiring service and inspection in the duct system, and unless otherwise shown, shall conform to SMACNA-06. Access doors shall be provided upstream and downstream of air flow measuring primaries and heating and cooling coils. Doors shall be minimum 375 x 450 mm, unless otherwise shown. Where duct size will not accommodate this size door, the doors shall be made as large as practicable. Doors 600 x 600 mm or larger shall be provided with fasteners operable from both sides. Doors in insulated ducts shall be the insulated type.

2.8.3.2 Fire Dampers

Fire dampers shall be 1-1/2 hour fire rated unless otherwise indicated. Fire dampers shall conform to the requirements of NFPA 90A and UL 555. Fire dampers shall be automatic operating type and shall have a dynamic rating suitable for the maximum air velocity and pressure differential to which it will be subjected. Fire dampers shall be approved for the specific application, and shall be installed according to their listing. Fire dampers shall be equipped with a steel sleeve or adequately sized frame installed in such a manner that disruption of the attached ductwork, if any, will not impair the operation of the damper. Sleeves or frames shall be equipped with perimeter mounting angles attached on both sides of the wall or floor opening. Ductwork in fire-rated floor-ceiling or roof-ceiling assembly systems with air ducts that pierce the ceiling of the assemblies shall be constructed in conformance with UL-05. Fire dampers shall be [curtain type with damper blades] [in the air stream] [out of the air stream] [or] [single blade type] [or] [multi-blade type]. Dampers shall not reduce the duct or the air transfer opening cross-sectional area. Dampers shall be installed so that the centerline of the damper depth or thickness is located in the centerline of the wall, partition or floor slab depth or thickness. Unless otherwise indicated, the installation details given in SMACNA-05 and in manufacturer's instructions for fire dampers shall be followed.

2.8.3.3 Splitters and Manual Balancing Dampers

Splitters and manual balancing dampers shall be furnished with accessible operating mechanisms. Where operators occur in finished portions of the building, operators shall be chromium plated with all exposed edges rounded. Splitters shall be operated by quadrant operators or 5 mm (3/16 inch) rod brought through the side of the duct with locking setscrew and bushing. Two rods are required on splitters over 200 mm (8 inches). Manual volume control dampers shall be operated by locking-type quadrant operators. Dampers and splitters shall be 2 gauges heavier than the duct in which installed. Unless otherwise indicated, multileaf dampers shall be opposed blade type with maximum blade width of 300 mm. Access doors or

panels shall be provided for all concealed damper operators and locking setscrews. Unless otherwise indicated, the locking-type quadrant operators for dampers, when installed on ducts to be thermally insulated, shall be provided with stand-off mounting brackets, bases, or adapters to provide clearance between the duct surface and the operator not less than the thickness of the insulation. Stand-off mounting items shall be integral with the operator or standard accessory of the damper manufacturer. Volume dampers shall be provided where indicated.

2.8.3.4 Air Deflectors and Branch Connections

Air deflectors shall be provided at duct mounted supply outlets, at takeoff or extension collars to supply outlets, at duct branch takeoff connections, and at 90 degree elbows, as well as at locations as indicated on the drawings or otherwise specified. Conical branch connections or 45 degree entry connections may be used in lieu of deflectors or extractors for branch connections. All air deflectors, except those installed in 90 degree elbows, shall be provided with an approved means of adjustment. Adjustment shall be made from easily accessible means inside the duct or from an adjustment with sturdy lock on the face of the duct. When installed on ducts to be thermally insulated, external adjustments shall be provided with stand-off mounting brackets, integral with the adjustment device, to provide clearance between the duct surface and the adjustment device not less than the thickness of the thermal insulation. Air deflectors shall be factory-fabricated units consisting of curved turning vanes or louver blades designed to provide uniform air distribution and change of direction with minimum turbulence or pressure loss. Air deflectors shall be factory or field assembled. Blade air deflectors, also called blade air extractors, shall be approved factory fabricated units consisting of equalizing grid and adjustable blade and lock. Adjustment shall be easily made from the face of the diffuser or by position adjustment and lock external to the duct. Stand-off brackets shall be provided on insulated ducts and are described herein. Fixed air deflectors, also called turning vanes, shall be provided in 90 degree elbows.

2.8.4 Duct Sleeves, Framed Prepared Openings, Closure Collars

2.8.4.1 Duct Sleeves

Duct sleeves shall be provided for round ducts 375 mm in diameter or less passing through floors, walls, ceilings, or roof, and installed during construction of the floor, wall, ceiling, or roof. Round ducts larger than 375 mm in diameter and square, rectangular, and oval ducts passing through floors, walls, ceilings, or roof shall be installed through framed prepared openings. The Contractor shall be responsible for the proper size and location of sleeves and prepared openings. Sleeves and framed openings are also required where grilles, registers, and diffusers are installed at the openings. Framed prepared openings shall be fabricated from 1.0 mm (20 gauge) galvanized steel, unless otherwise indicated. Where sleeves are installed in bearing walls or partitions, black steel pipe, ASTM A 53, Schedule 20 shall be used. Sleeve shall provide 25 mm clearance between the duct and the sleeve or 25 mm clearance between the insulation and the sleeve for insulated ducts.

2.8.4.2 Framed Prepared Openings

Openings shall have 25 mm clearance between the duct and the opening or 25 mm clearance between the insulation and the opening for insulated ducts.

2.8.4.3 Closure Collars

Collars shall be fabricated of galvanized sheet metal not less than 100 mm wide, unless otherwise indicated, and shall be installed on exposed ducts on each side of walls or floors where sleeves or prepared openings are provided. Collars shall be installed tight against surfaces. Collars shall fit snugly around the duct or insulation. Sharp edges of the collar around insulated duct shall be ground smooth to preclude tearing or puncturing the insulation covering or vapor barrier. Collars for round ducts 375 mm in diameter or less shall be fabricated from 1.0 mm (20 gauge) galvanized steel. Collars for round ducts larger than 375 mm and square, and rectangular ducts shall be fabricated from 1.3 mm (18 gauge) galvanized steel. Collars shall be installed with fasteners on maximum 150 mm centers, except that not less than 4 fasteners shall be used.

2.8.5 Plenums and Casings for Field-Fabricated Units

2.8.5.1 Plenum and Casings

Plenums and casings shall be fabricated and erected as shown in SMACNA-06, as applicable. Unless otherwise indicated, system casing shall be constructed of not less than 1.6 mm (16 gauge) galvanized sheet steel. Cooling coil drain pans with 25 mm threaded outlet shall be provided to collect condensation from the cooling coils. Drain pans shall be fabricated of not lighter than 1.6 mm (16 gauge) steel, galvanized after fabrication or of 1.3 mm (18 gauge) corrosion-resisting sheet steel conforming to ASTM A 167, Type 304, welded and stiffened. Drain pans exposed to the atmosphere shall be thermally insulated to prevent condensation. Insulation shall be coated with a flame resistant waterproofing material. Separate drain pans shall be provided for each vertical coil section, and a separate drain line shall be provided for each pan. Pans shall be generously sized to ensure capture of entrained moisture on the downstream-air side of the coil. Openings in the casing, such as for piping connections, shall be sealed and covered to prevent air leakage. Water seal for the drain shall provide at least 500 Pa greater than the maximum negative pressure in the coil space.

2.8.5.2 Casing

Casings shall be terminated at the curb line and anchored by the use of galvanized angle iron sealed and bolted to the curb, as indicated in SMACNA-06.

2.8.5.3 Access Doors

Access doors shall be provided in each section of the casing. Door frames shall be welded in place, and each door shall be neoprene gasketed, hinged with minimum of two brass hinges, and fastened with a minimum of two brass tension fasteners operable from inside and outside of the casing. Where possible, doors shall be 900 x 450 mm located 450 mm above the floor. Where the space available will not accommodate doors of this size, doors as large as the space will accommodate shall be provided. Doors shall swing so that fan suction or pressure holds door in closed position, and shall be airtight. A push-button station to stop the supply fan shall be located inside the casing where indicated.

2.8.5.4 Factory-Fabricated Insulated Sheet Metal Panels

Factory-fabricated components may be used for field-assembled units, provided all requirements specified for field-fabricated plenums and casings are met. Panels shall be of modular design, pretested for structural strength, thermal control, condensation control, and acoustical control. Panel joints shall be sealed and insulated access doors shall be provided and gasketed to prevent air leakage. Panel construction shall be not less than 1.0 mm (20 gauge) galvanized sheet steel and shall be assembled with fasteners treated against corrosion. Standard length panels shall deflect not more than 13 mm under operation. Details of construction, including joint sealing, not specifically covered shall be as indicated in SMACNA-06. The plenums and casings shall be constructed to withstand the specified internal pressure of the air systems.

2.8.5.5 Duct Liner

Unless otherwise specified, duct liner shall conform to ASTM C 1071, Type I or II.

2.8.6 Sound Attenuation Equipment

a. Systems With Total Pressure Above 1 kPa (4 Inches Water Gauge):

Sound attenuators shall be provided on the discharge duct of each fan operating at a total pressure above 1 kPa (4 inch water gauge), and, when indicated, at the intake of each fan system. Sound attenuators shall be provided elsewhere as indicated. The sound attenuators shall be factory fabricated and shall be tested by an independent laboratory for sound and performance characteristics. Net sound reduction shall be as indicated. Maximum permissible pressure drop shall not exceed 157 Pa (0.63 inch water gauge). Traps shall be constructed to be airtight when operating under an internal static pressure of 2.5 kPa. Air-side surface shall be capable of withstanding air velocity of 50 m/s (10,000 fpm). The Contractor shall certify that the sound reduction values specified will be obtained after the equipment is installed in the system and coordinated with the sound information of the system fan to be provided. Sound absorbing material shall conform to ASTM C 1071, Type I or II. Sound absorbing material shall meet the fire hazard rating requirements for insulation specified in Section 15250 THERMAL INSULATION FOR MECHANICAL SYSTEMS. A duct transition section shall be provided for connection to ductwork. Factory fabricated double-walled internally insulated spiral lock seam and round duct and fittings designed for high pressure air system may be provided in lieu of factory fabricated sound attenuators, and shall comply with requirements specified for factory fabricated sound attenuators. The double-walled duct and fittings shall be constructed of an outer metal pressure shell of zinc-coated steel sheet, 25 mm thick acoustical blanket insulation, and an internal perforated zinc-coated metal liner. Sufficient length of run shall be provided to obtain the noise reduction coefficient specified. The Contractor shall certify that the sound reduction value specified will be obtained within the length of duct run provided. The outer sheet metal of the double-walled duct shall have welded, or spiral lock, seams to prevent water vapor penetration. The outer sheet of the duct and fittings shall conform to the metal thickness of high pressure spiral and round ducts and fittings shown in SMACNA-06. The acoustical insulation shall have a thermal conductivity "k" of not more than 0.0389 W/m-K (0.27 Btu/inch/square foot/hour/degree F) at 24 degrees C (75 degrees F) mean temperature. The internal perforated zinc-coated metal liner shall be not less than 0.7 mm (24 gauge) with perforations not larger than 6.35 mm (1/4 inch) in diameter providing a net open area not less than 10 percent of the surface.

a. System With Total Pressure of 1000 Pa (4 Inch Water Gauge) and Lower:

Sound attenuators shall be provided only where indicated, or in lieu of lined ducts. Factory fabricated sound attenuators shall be constructed of galvanized steel sheets. Outer casing shall be not less than 0.85 mm (22 gauge). Acoustical fill shall be fibrous glass. Net sound reduction shall be as indicated. Values shall be obtained on a test unit not less than 600 mm by 600 mm outside dimensions made by a certified nationally recognized independent acoustical laboratory. Air flow capacity shall be as indicated or required. Pressure drop through the attenuator shall not exceed the value indicated, or shall not be in excess of 15 percent of the total external static pressure of the air handling system, whichever is less. Sound attenuators shall be acoustically tested with metal duct inlet and outlet sections while under the rated air flow conditions. Noise reduction data shall include the effects of flanking paths and vibration transmission. Sound attenuators shall be constructed to be airtight when operating at the internal static pressure indicated or specified for the duct system, but in no case less than 500 Pa (2 inch water gauge).

a. Acoustical Duct Liner:

Acoustical duct lining shall be fibrous glass designed exclusively for lining ductwork and shall conform to the requirements of ASTM C 1071, Type I and II. Liner composition may be uniform density, graduated density, or dual density, as standard with the manufacturer. Lining shall be coated, not less than 25 mm thick. Where acoustical duct liner is used, liner or combination of liner and insulation applied to the exterior of the ductwork shall be the thermal equivalent of the insulation specified in Section 15250 THERMAL INSULATION FOR MECHANICAL SYSTEMS. Duct sizes shown shall be increased to compensate for the thickness of the lining used. In lieu of sheet metal duct with field-applied acoustical lining, acoustically equivalent lengths of fibrous glass duct or factory fabricated double-walled internally insulated duct with perforated liner may be provided. Net insertion loss value, static pressure drop, and air flow velocity capacity data shall be certified by a nationally recognized independent acoustical laboratory.

2.8.7 Diffusers, Registers, and Grilles

Units shall be factory-fabricated of steel, corrosion-resistant steel, or aluminum and shall distribute the specified quantity of air evenly over space intended without causing noticeable drafts, air movement faster than 0.25 m/s (50 fpm) in occupied zone, or dead spots anywhere in the conditioned area. Outlets for diffusion, spread, throw, and noise level shall be as required for specified performance. Performance shall be certified according to ASHRAE 70. Inlets and outlets shall be sound rated and certified according to ASHRAE 70. Sound power level shall be as indicated. Diffusers and registers shall be provided with volume damper with accessible operator, unless otherwise indicated; or if standard with the manufacturer, an automatically controlled device will be acceptable. Volume dampers shall be opposed blade type for all diffusers and registers, except linear slot diffusers. Linear slot diffusers shall be provided with round or elliptical balancing dampers. Where the inlet and outlet openings are located less than 2 m above the floor, they shall be protected by a grille or screen according to NFPA 90A.

2.8.7.1 Diffusers

Diffuser types shall be as indicated. Ceiling mounted units shall be furnished with anti-smudge devices, unless the diffuser unit minimizes ceiling smudging through design features. Diffusers shall be provided with air deflectors of the type indicated. Air handling troffers or combination light and ceiling diffusers shall conform to the requirements of UL-03for the interchangeable use as cooled or heated air supply diffusers or return air units. Ceiling mounted units shall be installed with rims tight against ceiling. Sponge rubber gaskets shall be provided between ceiling and surface mounted diffusers for air leakage control. Suitable trim shall be provided for flush mounted diffusers. Duct collar connecting the duct to diffuser shall be airtight and shall not interfere with volume controller. Return or exhaust units shall be similar to supply diffusers.

2.8.7.2 Registers and Grilles

Units shall be four-way directional-control type, except that return and exhaust registers may be fixed horizontal or vertical louver type similar in appearance to the supply register face. Registers shall be provided with sponge-rubber gasket between flanges and wall or ceiling. Wall supply registers shall be installed at least 150 mm below the ceiling unless otherwise indicated. Return and exhaust registers shall be located 150 mm above the floor unless otherwise indicated. Four-way directional control may be achieved by a grille face which can be rotated in 4 positions or by adjustment of horizontal and vertical vanes. Grilles shall be as specified for registers, without volume control damper.

2.8.8 Louvers

Louvers for installation in exterior walls which are associated with the air supply and distribution system shall be as specified in Section 07600 SHEET METALWORK, GENERAL.

2.8.9 Air Vents, Penthouses, and Goosenecks

Air vents, penthouses, and goosenecks shall be fabricated from galvanized steel [or aluminum] sheets with galvanized [or aluminum] structural shapes. Sheet metal thickness, reinforcement, and fabrication shall conform to SMACNA-06. Louver blades shall be accurately fitted and secured to frames. Edges of louver blades shall be folded or beaded for rigidity and baffled to exclude driving rain. Air vents, penthouses, and goosenecks shall be provided with bird screen.

2.8.10 Bird Screens and Frames

Bird screens shall conform to ASTM E 437, Type I, Class 1, 2 by 2 mesh, 1.6 mm diameter aluminum wire or 0.8 mm inch diameter stainless steel wire. Frames shall be removable type or stainless steel or extruded aluminum.

2.8.11 Radon Exhaust Ductwork

Radon exhaust ductwork installed in or beneath slabs shall be fabricated from Schedule 40 PVC pipe that conforms to ASTM D 1785. Fittings shall conform to ASTM D 2466. Solvent cement used to make joints shall conform to ASTM D 2564. Otherwise radon exhaust ductwork shall be metal as specified herein.

2.9 AIR SYSTEMS EQUIPMENT

2.9.1 Fans

Fans shall be tested and rated according to AMCA 210. Fans may be connected to the motors either directly or indirectly with V-belt drive. V-belt drives shall be designed for not less than [150] [140] [120] percent of the connected driving capacity. Motor sheaves shall be variable pitch for 11 kW (15 hp) and below and fixed pitch as defined by ARI Guideline D. Variable pitch sheaves shall be selected to drive the fan at a speed which will produce the specified capacity when set at the approximate midpoint of the sheave adjustment. When fixed pitch sheaves are furnished, a replaceable sheave shall be provided when needed to achieve system air balance. Motors for V-belt drives shall be provided with adjustable rails or bases. Removable metal guards shall be provided for all exposed V-belt drives, and speed-test openings shall be provided at the center of all rotating shafts. Fans shall be provided with personnel screens or guards on both suction and supply ends, except that the screens need not be provided, unless otherwise indicated, where ducts are connected to the fan. Fan and motor assemblies shall be provided with vibration-isolation supports or mountings as indicated. Vibration-isolation units shall be standard products with published loading ratings. Each fan shall be selected to produce the capacity required at the fan static pressure indicated. Sound power level shall be as indicated. The sound power level values shall be obtained according to AMCA 300. Standard AMCA arrangement, rotation, and discharge shall be as indicated.

2.9.1.1 Centrifugal Fans

Centrifugal fans shall be fully enclosed, single-width single-inlet, or double-width double-inlet, AMCA Pressure Class I, II, or III as required or indicated for the design system pressure. Impeller wheels shall be rigidly constructed, accurately balanced both statically and dynamically. Fan blades may be forward curved, backward-inclined or airfoil design in wheel sizes up to 750 mm (30 inches). Fan blades for wheels over 750 mm (30 inches) in diameter shall be backward-inclined or airfoil design. Fan wheels over 900 mm (36 inches) in diameter shall have overhung pulleys and a bearing on each side of the wheel. Fan wheels 900 mm (36 inches) or less in diameter may have one or more extra long bearings between the fan wheel and the drive. Bearings shall be sleeve type, self-aligning and self-oiling with oil reservoirs, or precision self-aligning roller or ball-type with accessible grease fittings or permanently lubricated type. Grease fittings shall be connected to tubing and serviceable from a single accessible point. Bearing life shall be L50 rated at not less than 200,000 hours as defined by ABEMA 9 and ABEMA 11. Fan shafts shall be steel, accurately finished, and shall be provided with key seats and keys for impeller hubs and fan pulleys. Each fan outlet shall be of ample proportions and shall be designed for the attachment of angles and bolts for attaching flexible connections. [[Manually] [Automatically] operated inlet vanes shall be provided on suction inlets. [Manually] [Automatically] operated outlet dampers shall be provided.] Motors, unless otherwise indicated, shall not exceed 1800 rpm and shall have [open] [dripproof] [totally enclosed] [explosion-proof] enclosures. [Motor starters shall be [manual] [magnetic] [across-the-line] [reduced-voltage-start] type with [general-purpose] [weather-resistant] [watertight] enclosure.] [Remote manual switch with pilot indicating light shall be provided where indicated.]

2.9.1.2 In-Line Centrifugal Fans

In-line fans shall have centrifugal backward inclined blades, stationary

discharge conversion vanes, internal and external belt guards, and adjustable motor mounts. Fans shall be mounted in a welded tubular casing. Air shall enter and leave the fan axially. Inlets shall be streamlined with conversion vanes to eliminate turbulence and provide smooth discharge air flow. Fan bearings and drive shafts shall be enclosed and isolated from the air stream. Fan bearings shall be sealed against dust and dirt and shall be permanently lubricated, and shall be precision self aligning ball or roller type. Bearing life shall be L50 rated at not less than 200,000 hours as defined by ABEMA 9 and ABEMA 11. [Motors shall have [open] [dripproof] [totally enclosed] [explosion-proof] enclosure.] [Motor starters shall be [manual] [magnetic] across-the-line with [general-purpose] [weather-resistant] [explosion-proof] enclosures.] [Remote manual switch with pilot indicating light shall be provided where indicated.]

2.9.1.3 Axial Flow Fans

Axial flow fans shall be complete with drive components and belt guard, and shall have a steel housing, cast fan wheel, cast or welded steel diffusers, fan shaft, bearings, and mounting frame as a factory-assembled unit. Fan wheels shall have radially projecting blades of airfoil cross section and shall be dynamically balanced and keyed to the fan shaft. Fan bearings and drive shafts shall be enclosed and isolated from the air stream. Fan bearings shall be sealed against dust and dirt, shall be permanently lubricated or with accessible grease fittings, and shall be precision self-aligning ball or roller type. Bearing life shall be L50 rated at not less than 200,000 hours of operation as defined by ABEMA 9 and ABEMA 11. Fan inlets shall be provided with an aerodynamically shaped bell and an inlet cone. Diffuser or straightening vanes shall be provided at the fan discharge to minimize turbulence and provide smooth discharge air flow. Fan unit shall be provided with [inlet and outlet flanges,] [inlet screen,] [duct equalizer section,] and [manual] [automatic] operation adjustable inlet vanes. Unless otherwise indicated, motors shall not exceed 1800 rpm and shall have [open] [dripproof] [totally enclosed] [explosion-proof] enclosure. [Motor starters shall be [manual] [magnetic] across-the-line with [general-purpose] [weather-resistant] [explosion-proof] enclosure.] [Remote manual switch with pilot indicating light shall be provided where indicated.]

2.9.1.4 Panel Type Power Wall Ventilators

Fans shall be propeller type, assembled on a reinforced metal panel with venturi opening spun into panel. Fans with wheels less than 600 mm (24 inches) diameter shall be direct or V-belt driven and fans with wheels 600 mm (24 inches) diameter and larger shall be V-belt drive type. Fans shall be furnished with wall mounting collar. Lubricated bearings shall be provided. Fans shall be fitted with wheel and motor side metal or wire guards which have a corrosion-resistant finish. Motor enclosure shall be [dripproof] [totally enclosed fan cooled] [explosion-proof] type. [Gravity] [Motor operated] backdraft dampers shall be provided where indicated.

2.9.1.5 Centrifugal Type Power Wall Ventilators

Fans shall be [direct] [or] [V-belt] driven centrifugal type with backward inclined, non-overloading wheel. Motor housing shall be removable and weatherproof. Unit housing shall be designed for sealing to building surface and for discharge and condensate drippage away from building surface. Housing shall be constructed of heavy gauge aluminum. Unit shall

be fitted with an [aluminum or plated steel wire discharge bird screen,] [[anodized aluminum] [stainless steel] wall grille,] [manufacturer's standard [gravity] [motor-operated] damper,] an airtight and liquid-tight metallic wall sleeve. Motor enclosure shall be [totally enclosed fan cooled] [dripproof] [explosion-proof] type. Lubricated bearings shall be provided.

2.9.1.6 Centrifugal Type Power Roof Ventilators

Fans shall be [direct] [or] [V-belt] driven with backward inclined, non-overloading wheel. Motor compartment housing shall be hinged or removable and weatherproof, constructed of heavy gauge aluminum. Fans shall be provided with [birdscreen,] [disconnect switch,] [[gravity] [motorized] dampers,] [sound curb,] [roof curb,] and [extended base]. Motors enclosure shall be [dripproof] [explosion-proof] type. Grease-laden kitchen exhaust fans shall be centrifugal type according to UL 705 and fitted with V-belt drive, round hood, and windband upblast discharge configuration, integral residue trough and collection device, motor and power transmission components located in outside positively air ventilated compartment. Lubricated bearings shall be provided.

2.9.1.7 Propeller Type Power Roof Ventilators

Fans shall be [direct] [or] [V-belt] driven. Fan housing shall be hinged or removable weathertight, fitted with framed rectangular base constructed of aluminum or galvanized steel. Motors shall be [totally enclosed fan cooled] [explosion-proof] type. Motors shall be provided with nonfusible, horsepower rated, manual disconnect mount on unit. Fans shall be provided with [gravity] [motor operated] dampers, [birdscreen] [sound curb] [roof curb]. Lubricated bearings shall be provided.

2.9.1.8 Air-Curtain Fans

Air curtains shall be provided with a weatherproof housing constructed of high impact plastic or minimum 1.3 mm (18 gauge) rigid welded steel. Fan wheels shall be backward curved, non-overloading, centrifugal type and accurately balanced statically and dynamically. Motors shall have totally enclosed fan cooled enclosures. Motor starters shall be remote manual type with weather-resistant enclosure actuated when the doorway served is open. The air curtains shall attain the air velocities specified within 2 seconds following activation. Air intake and discharge openings shall be protected by bird screens. Air curtain unit or a multiple unit installation shall be at least as wide as the opening to be protected. The air discharge openings shall be so designed and equipped as to permit outward adjustment of the discharge air. Adjustment and installation placement shall be according to the manufacturer's written recommendation. Directional controls on air curtains for service windows shall be designed to be easily cleanable or readily removable. Air curtains shall be designed to prevent the adjustment of the air velocities specified. The interior surfaces of the air curtain units shall be accessible for cleaning. Certified test data indicating that the fan will provide the air velocities required when fan is mounted as indicated shall be furnished. Air curtains designed as fly fans shall be provided where indicated. [Air curtains designed for use in service entranceways shall develop an air curtain not less than 75 mm thick at the discharge nozzle. The air velocity shall be not less than 8 m/s across the entire entryway when measured 900 mm above the floor.] [Air curtains designed for use on customer entranceways shall develop an air curtain not less than 200 mm thick at the discharge opening. The velocity shall be not less than 3 m/s across the entire entryway when

measured 900 mm above the floor. Recirculating type air curtains shall be equipped with readily removable filters, or the filters shall be designed for in-position cleaning. The air capture compartment shall be readily accessible and easily cleanable or designed for in-position cleaning.] [Air curtains designed for use on service windows shall develop an air curtain not less than 200 mm thick at the discharge opening. The air velocity shall be not less than 3 m/s across the entire opening of the service window measured 900 mm below the air discharge opening.]

2.9.1.9 Ceiling Exhaust Fans

Suspended cabinet-type ceiling exhaust fans shall be centrifugal type, direct-driven. Fans shall have acoustically insulated housing. Integral backdraft damper shall be chatter-proof. The integral face grille shall be of egg-crate design or louver design. Fan motors shall be mounted on vibration isolators. Unit shall be provided with mounting flange for hanging unit from above. Fans shall be U.L. listed.

2.9.2 Coils

Coils shall be fin-and-tube type constructed of seamless [copper] [red brass] tubes and [aluminum] [or] [copper] fins mechanically bonded or soldered to the tubes. [Copper tube wall thickness shall be a minimum of [0.406] [0.508] [0.6096] mm ([0.016] [0.020] [0.024] inches).] [Red brass tube wall thickness shall be a minimum of [0.89] [1.24] mm ([0.035] [0.049] inches).] [Aluminum fins shall be [0.14] [0.19] mm ([0.0055] [0.0075] inch) minimum thickness.] [Copper fins shall be 0.114 mm (0.0045 inch) minimum thickness.] Casing and tube support sheets shall be not lighter than 1.6 mm (16 gauge) galvanized steel, formed to provide structural strength. When required, multiple tube supports shall be provided to prevent tube sag. Each coil shall be tested at the factory under water at not less than 2.76 MPa (400 psi) air pressure and shall be suitable for 1.38 MPa (200 psi) working pressure. Coils shall be mounted for counterflow service. Coils shall be rated and certified according to ARI 410.

2.9.2.1 Direct-Expansion Coils

Direct-expansion coils shall be suitable for the refrigerant involved. Suction headers shall be seamless copper tubing or seamless or resistance welded steel tube with copper connections. Supply headers shall consist of a distributor which shall distribute the refrigerant through seamless copper tubing equally to all circuits in the coil. Tubes shall be circuited to ensure minimum pressure drop and maximum heat transfer. Circuiting shall permit refrigerant flow from inlet to suction outlet without causing oil slugging or restricting refrigerant flow in coil. Each coil to be field installed shall be completely dehydrated and sealed at the factory upon completion of pressure tests.

2.9.2.2 Water Coils

Water coils shall be installed with a pitch of not less than 10 mm per meter of the tube length toward the drain end. Headers shall be constructed of cast iron, welded steel or copper. Each coil shall be provided with a plugged vent and drain connection extending through the unit casing.

2.9.2.3 Steam Heating Coils

Steam coils shall be constructed of cast semisteel, welded steel or copper

headers, and [red brass] [copper] tubes. Headers shall be constructed of cast iron, welded steel or copper. Fin tube and header section shall float within the casing to allow free expansion of tubing for coils subject to high pressure steam service. Each coil shall be provided with a field or factory installed vacuum breaker. Coils shall be single-tube type with tubes not less than 12 mm (1/2 inch) outside diameter, except for steam preheat coils. Supply headers shall distribute steam evenly to all tubes at the indicated steam pressure. Coils shall be factory tested to ensure that, when supplied with a uniform face velocity, temperature across the leaving side will be uniform with a maximum variation of no more than 5 percent.

2.9.2.4 Steam Preheat (Nonfreeze) Coils

Steam (nonfreeze) coils shall be steam-distribution-tube type with condensing tubes not less than 25 mm (1 inch) outside diameter for tube lengths 1.5 m (60 inches) and over and 12 mm (1/2 inch) outside diameter for tube lengths under 1.5 m (60 inches). Headers shall be constructed of cast iron, welded steel, or copper. Distribution tubes shall be not less than 15 mm (5/8 inch) outside diameter for tube lengths 1.5 m (60 inches) and over and 10 mm (3/8 inch) outside diameter for tube lengths under 1.5 m (60 inches) with orifices to discharge steam to condensing tubes. Distribution tubes shall be installed concentric inside of condensing tubes and shall be held securely in alignment. Maximum length of a single coil shall be limited to 3.66 m (144 inches). Coils shall be factory tested to ensure that, when supplied with a uniform face velocity, temperature across the leaving side will be uniform with a maximum variation of no more than 5 percent.

2.9.3 Air Filters

Air filters shall be listed according to requirements of UL 900, except high efficiency particulate air filters of 99.97 percent efficiency by the DOP Test method shall be as listed under the Label Service and shall meet the requirements of UL 586.

2.9.3.1 Extended Surface Pleated Panel Filters

Filters shall be 50 mm (2 inch) depth, sectional, disposable type of the size indicated and shall have an average efficiency of 25 to 30 percent when tested according to ASHRAE 52.1. Initial resistance at 2.54 m/s (500 feet per minute) shall not exceed 9 mm water gauge. Filters shall be UL Class 2. Media shall be nonwoven cotton and synthetic fiber mat. A wire support grid bonded to the media shall be attached to a moisture resistant fiberboard frame. All four edges of the filter media shall be bonded to the inside of the frame to prevent air bypass and increase rigidity.

2.9.3.2 Extended Surface Nonsupported Pocket Filters

Filters shall be [750] [_____] mm ([30] [_____] inch) depth, sectional, replaceable dry media type of the size indicated and shall have an average efficiency of 80 to 85 percent when tested according to ASHRAE 52.1. Initial resistance at [2.54] [_____] m/s ([500] [_____] feet per minute) shall not exceed [11] [_____] mm ([0.45] [_____] inches) water gauge. Filters shall be UL Class 1. Media shall be fibrous glass, supported in the air stream by a wire or non-woven synthetic backing and secured to a galvanized steel metal header. Pockets shall not sag or flap at anticipated air flows. Each filter shall be installed [with an extended surface pleated panel filter as a prefilter] in a factory preassembled,

side access housing or a factory-made sectional frame bank, as indicated.

2.9.3.3 Sectional Cleanable Filters

Cleanable filters shall conform to ASTM F 872, and shall be [25] [50] mm thick. Viscous adhesive shall be provided in 20 liter containers in sufficient quantity for 12 cleaning operations and not less than one liter for each filter section. One washing and charging tank shall be provided for every 100 filter sections or fraction thereof. Each washing and charging unit shall consist of a tank and [single] [double] drain rack mounted on legs. Drain rack shall be provided with dividers and partitions to properly support the filters in the draining position. Initial pressure drop for clean filters shall not exceed the applicable values listed in ASTM F 872.

2.9.3.4 Replaceable Media Filters

Replaceable media filters shall be the [dry-media] [viscous adhesive] type, of the size required to suit the application. Filtering media shall be not less than 50 mm (2 inches) thick fibrous glass media pad supported by a structural wire grid or woven wire mesh. Pad shall be enclosed in a holding frame of not less than 1.6 mm (16 gauge) galvanized steel, and equipped with quick-opening mechanism for changing filter media. The air flow capacity of the filter shall be based on net filter face velocity not exceeding [1.5] [_____] m/s ([300] [_____] feet per minute), with initial resistance of [32] [_____] Pa ([0.13] [_____] inches water gauge). Average efficiency shall be not less than [_____] percent when tested according to ASHRAE 52.1.

2.9.3.5 Automatic Renewable Media Filters

Automatic, renewable media filters shall consist of a horizontal or vertical traveling curtain of adhesive-coated bonded fibrous glass supplied in convenient roll form. Operation and maintenance requirements of the filter shall not require water supply, sewer connections, adhesive reservoir, or sprinkler equipment. Basic frame shall be fabricated of not less than 2 mm (14 gauge) galvanized steel. Filters shall be sectional design with each section of each filter fully factory assembled, requiring no field assembly other than setting in place next to any adjacent sections and the installation of media in roll form. Each filter shall be complete with initial loading of filter media drive motor adequate to handle the number of sections involved, and [painted steel] [stainless steel] control box containing a warning light to indicate media runout, a runout switch, and a Hand-Off-Auto selector switch. Media feed across the filter face shall be in [full-face increments] [increments] automatically controlled as determined by [filter pressure differential] [time interval control] [time interval control with pressure override] [photo electric control] to provide substantially constant operating resistance to airflow and varying not more than plus or minus 10 percent. Media shall be rolled or enclosed in such a way that collected particulates will not re-entrain. Rolls of clean media, no less than 19.8 m (65 feet) long, shall be rerolled on disposable spools in the rewind section of the filter after the media has accumulated its design dirt load. Rewind section shall be equipped with a compression panel to tightly rewind used media for ease of handling. Media shall be of continuous, bonded fibrous glass material, shall be UL Class 2, and shall not compress more than 6 mm (1/4 inch) when subjected to air flow at 2.54 m/s (500 fpm). Media shall be factory charged with an odorless and flame retardant adhesive which shall not flow while in storage nor when subjected to temperatures up to 79.4 degrees C (175 degrees F).

Media shall be supported on both the leaving and entering air faces. The initial resistance of the clean media shall not exceed 45 Pa (0.18 inch water gauge) at its rated velocity of 2.54 m/s (500 fpm). Control shall be set so that the resistance to air flow is between 100 and 125 Pa (0.40-and 0.50 inch water gauge) unless otherwise indicated. Dust holding capacity under these operating conditions, when operating at a steady state with an upper operating resistance of 125 Pa (0.50 inch water gauge), shall be at least 592 grams of ASHRAE Standard Test Dust per square meter of media area, when tested according to the dynamic testing provisions of ASHRAE 52.1. Average arrestance under these conditions shall be 80 percent. When used in conjunction with factory fabricated air handling units, the horizontal type automatic renewable media filters shall be dimensionally compatible with the connecting air handling units. Horizontal type filter housings shall have all exposed surfaces factory insulated internally with 25 mm (1 inch), 24 kg per cubic meter (1-1/2 pound) density neoprene coated fibrous glass with thermal conductivity not greater than 0.04 W/m-K (0.27 Btu/hour/degree F/square foot/inch of thickness). Access doors for horizontal filters shall be of double wall construction as specified for plenums and casings for field-fabricated units in paragraph DUCTWORK COMPONENTS.

2.9.3.6 Electrostatic Filters

Electrostatic filters shall be the combination dry agglomerator/extended surface nonsupported pocket filter or the combination dry agglomerator/automatic renewable media (roll) type, as indicated. except as modified. Each dry agglomerator electrostatic air filter shall be supplied with the correct quantity of fully housed power packs and equipped with silicon rectifiers, manual reset circuit breakers, low voltage safety cutout, relays for field wiring to remote indication of primary and secondary voltages, and lamps mounted in the cover to indicate these functions locally. Power pack enclosure shall be equipped with external mounting brackets, and low and high voltage terminals shall be fully exposed with access cover removed for ease of installation. Interlock safety switches shall be furnished for each access door and access panel which permits access to either side of the filter, so that the filter will be de-energized in the event that a door or panel is opened. Ozone generation within the filter shall not exceed five parts per one hundred million parts of air. High voltage insulators shall be located outside the moving air stream or on the clean air side of the unit and shall be serviceable. Ionizer wire supports shall be fully exposed and ionizer wires shall be furnished precut to size and with formed loops at each end to facilitate ionizer wire replacement. Agglomerator cell plates shall allow proper air stream entrainment of agglomerates and prevent excessive residual dust build-up. Cells shall be open at the top and bottom to prevent accumulation of agglomerates which settle by gravity. Where the dry agglomerator electrostatic filter is indicated to be the automatic renewable media type, the storage section shall utilize a horizontal or vertical travelling curtain of adhesive-coated bonded fibrous glass for dry agglomerator storage section service and supplied in 19.8 m (65 foot) lengths in convenient roll form. Storage section construction and roll media characteristics shall otherwise be as specified for automatic renewable media filters. Initial air flow resistance of the dry agglomerator/renewable media combination, after installation of clean media, shall not exceed 62.3 Pa (0.25 inch water gauge) at 2.54 m/s (500 fpm) face velocity. Minimum atmospheric air dust spot efficiency of the combination shall be not less than 90 percent when tested according to ASHRAE 52.1 at an average operating resistance of 125 Pa (0.50 inch water gauge). Where the dry agglomerator electrostatic filter is indicated to

be of the extended surface nonsupported pocket filter type, the storage section shall be as specified for extended surface non-supported pocket filters, with sectional holding frames or side access housings as indicated. Initial air flow resistance of the dry agglomerator/extended surface nonsupported pocket filter section combination, after installation of clean filters, shall not exceed 162 Pa (0.65 inch water gauge) at 2.54 m/s (500 fpm) face velocity. Minimum atmospheric air dust spot efficiency of the combination shall be not less than 95 percent when tested according to ASHRAE 52.1. Front access filters shall be furnished with full height air distribution baffles and upper and lower mounting tracks to permit the baffles to be moved for agglomerator cell inspection and service. When used in conjunction with factory fabricated air handling units, side access housings shall be supplied which have dimensional compatibility.

2.9.3.7 High-Efficiency Particulate Air (HEPA) Filters

HEPA filters shall meet the requirements of IES RP-CC-001.3 and shall be individually tested and certified to have an efficiency of not less than [95] [99.97]. Initial resistance at [_____] m/s ([_____] feet per minute) shall not exceed [_____] Pa ([_____] inches water gauge). Filters shall be constructed by pleating a continuous sheet of filter medium into closely spaced pleats separated by corrugated aluminum or mineral-fiber inserts, strips of filter medium, or by honeycomb construction of the pleated filter medium. Interlocking, dovetailed, molded neoprene rubber gaskets of 5-10 durometer shall be cemented to the perimeter of the [upstream] [downstream] face of the filter cell sides. Adhesive sealer shall be of self-extinguishing rubber-base type or other materials conforming to fire hazard classification specified in Section 15250THERMAL INSULATION FOR MECHANICAL SYSTEMS. Filter cell sides shall be [18 mm (3/4 inch) thick exterior grade fire-retardant plywood] [cadmium plated steel] [galvanized steel] assembled in a rigid manner. Overall cell side dimensions shall be correct to 2.0 mm, and squareness shall be maintained to within 3.2 mm. Each holding frame shall use spring loaded fasteners or other devices to seal the filter tightly within it and to prevent any bypass leakage around the filter during its installed life. Air capacity and the nominal depth of the filter shall be as indicated. Each filter shall be installed in a factory preassembled side access housing or a factory-made sectional supporting frame as indicated. Prefilters of the type, construction and efficiency indicated, shall be provided.

2.9.3.8 Range and Griddle Hood Service

Filter shall be sectional, permanent, washable, all metallic media type, nominal thick, with suitable metal frames, designed for extraction of grease from grease-laden air. Clean filter static pressure drop shall not exceed [_____] Pa ([_____] inch water gauge) when handling [_____] L/s ([_____] cfm) air.

2.9.3.9 Holding Frames

Frames shall be fabricated from not lighter than 1.6 mm (16 gauge) sheet steel with rust-inhibitor coating. Each holding frame shall be equipped with suitable filter holding devices. Holding frame seats shall be gasketed. All joints shall be airtight.

2.9.3.10 Filter Gauges

Filter gauges shall be dial type, diaphragm actuated draft and shall be provided for all filter stations, including those filters which are

furnished as integral parts of factory fabricated air handling units. Gauges shall be at least 98 mm (3-7/8 inches) in diameter, shall have white dials with black figures, and [graduations] [shall be graduated in 0.25 mm (0.01 inch),] and shall have a minimum range of 25 mm beyond the specified final resistance for the filter bank on which each gauge is applied. Each gauge shall incorporate a screw operated zero adjustment and shall be furnished complete with two static pressure tips with integral compression fittings, two molded plastic vent valves, two 1.5 m (5 foot) minimum lengths of 6.35 mm (1/4 inch) diameter [aluminum] [vinyl] tubing, and all hardware and accessories for gauge mounting.

2.10 AIR HANDLING UNITS

2.10.1 Field-Fabricated Air Handling Units

Built-up units shall be as specified in paragraph DUCTWORK COMPONENTS. Fans, coils spray-coil dehumidifiers, and air filters shall be as specified in paragraph AIR SYSTEMS EQUIPMENT for types indicated.

2.10.2 Factory-Fabricated Air Handling Units

Units shall be [single-zone draw-through type] [or] [single-zone blow-through type] [or] [multizone blow-through type] [blow-through double-deck type] [blow-through triple deck type] as indicated. Units shall include fans, coils, airtight insulated casing, [prefilters,] [secondary filter sections,] [and] [diffuser sections where indicated,] [air blender] adjustable V-belt drives, belt guards for externally mounted motors, access sections where indicated, [mixing box] [combination sectional filter-mixing box,] [[pan] [drysteam] [spray type] humidifier,] vibration-isolators, and appurtenances required for specified operation. Vibration isolators shall be as indicated. Each air handling unit shall have physical dimensions suitable to fit space allotted to the unit and shall have the capacity indicated. Air handling unit shall have published ratings based on tests performed according to ARI 430.

2.10.2.1 Casings

Casing sections shall be [[single] [2 inch double] wall type] [as indicated,] constructed of a minimum 18 gauge galvanized steel, or 18 gauge steel outer casing protected with a corrosion resistant paint finish according to paragraph FACTORY PAINTING. [Inner casing of double-wall units shall be minimum 1.0 mm (20 gauge) solid galvanized steel.] Casing shall be designed and constructed with an integral structural steel frame such that exterior panels are non-load bearing. Exterior panels shall be individually removable. Removal shall not affect the structural integrity of the unit. Casings shall be provided with inspection doors, access sections, and access doors as indicated. Inspection and access doors shall be insulated, fully gasketed, double-wall type, of a minimum 1.3 mm (18 gauge) outer and 1.0 mm (20 gauge) inner panels. Doors shall be rigid and provided with heavy duty hinges and latches. Inspection doors shall be a minimum 300 mm wide by 300 mm high. Access doors shall be minimum 600 mm wide and shall be the full height of the unit casing or a minimum of 1800 mm, whichever is less. [A minimum 200 mm by 200 mm sealed glass window suitable for the intended application shall be installed in all access doors.] Access Sections shall be according to paragraph AIR HANDLING UNITS. Drain pan shall be double-bottom type constructed of 16 gauge [galvanized steel] [stainless steel], pitched to the drain connection. Drain pans shall be constructed water tight, treated to prevent corrosion, and designed for positive condensate drainage. When 2

or more cooling coils are used, with one stacked above the other, condensate from the upper coils shall not flow across the face of lower coils. Intermediate drain pans or condensate collection channels and downspouts shall be provided, as required to carry condensate to the unit drain pan out of the air stream and without moisture carryover. Each casing section handling conditioned air shall be insulated with not less than 25 mm (1 inch) thick, 24 kg per cubic meter (1-1/2 pound density) coated fibrous glass material having a thermal conductivity not greater than 0.033 W/m-K (0.23 Btu/hr-sf-F). Factory applied fibrous glass insulation shall conform to ASTM C 1071, except that the minimum thickness and density requirements do not apply, and shall meet the requirements of NFPA 90A. Foam-type insulation is not acceptable. Foil-faced insulation shall not be an acceptable substitute for use on double-wall access doors and inspections doors [and casing sections]. Duct liner material, coating, and adhesive shall conform to fire-hazard requirements specified in Section 15250 THERMAL INSULATION FOR MECHANICAL SYSTEMS. Exposed insulation edges and joints where insulation panels are butted together shall be protected with a metal nosing strip or shall be coated to conform to meet erosion resistance requirements of ASTM C 1071. A latched and hinged inspection door, shall be provided in the fan and coil sections. Additional inspection doors, access doors and access sections shall be provided [_____] [where indicated].

2.10.2.2 Heating and Cooling Coils

Coils shall be provided as specified in paragraph AIR SYSTEMS EQUIPMENT, for types indicated.

2.10.2.3 Cooling Coils, Spray Type

Cooling coils shall be of the copper finned [direct expansion] [water] type as specified in paragraph AIR SYSTEMS EQUIPMENT furnished complete with water sprays. All horizontal units and vertical units with coil face velocities of 2.5 m per second (550 fpm) or above, shall be provided with moisture eliminators. Sprays shall have all bronze, brass, or stainless steel centrifugal type nozzles, with removable caps designed and arranged for uniform wetting of the entire coil face area. Nozzles shall be supplied by standard weight galvanized steel piping and a centrifugal type circulating pump furnished as an integral part of the unit. Eliminators shall be not lighter than 0.7 mm (24 gauge) corrosion-resistant steel, removable for maintenance and coil inspection. No water shall carry over into the fan section or supply ducts from the air handling unit provided with or without eliminators.

2.10.2.4 Air Filters

Air filters shall be as specified in paragraph AIR SYSTEMS EQUIPMENT for types and thickness indicated.

2.10.2.5 Fans

Fans shall be double-inlet, centrifugal type with each fan in a separate scroll. Fans and shafts shall be dynamically balanced prior to installation into air handling unit, then the entire fan assembly shall be statically and dynamically balanced at the factory after it has been installed in the air handling unit. Fans shall be mounted on steel shafts accurately ground and finished. Fan bearings shall be sealed against dust and dirt and shall be precision self-aligning ball or roller type. Bearing life shall be L50 rated at not less than 200,000 hours as defined by ABEMA 9

and ABEMA 11. Bearings shall be permanently lubricated or lubricated type with lubrication fittings readily accessible at the drive side of the unit. Bearings shall be supported by structural shapes, or die formed sheet structural members, or support plates securely attached to the unit casing. Bearings may not be fastened directly to the unit sheet metal casing. Fans and scrolls shall be furnished with coating indicated. Fans shall be driven by a unit-mounted or a floor-mounted motor connected to fans by V-belt drive complete with belt guard for externally mounted motors. Belt guards shall be the three sided enclosed type with solid or expanded metal face. Belt drives shall be designed for not less than a 1.3 service factor based on motor nameplate rating. Motor sheaves shall be variable pitch for 20 kW and below and fixed pitch above 20 kW as defined by ARI Guideline D. Where fixed sheaves are required, variable pitch sheaves may be used during air balance, but shall be replaced with an appropriate fixed sheave after air balance is completed. Variable pitch sheaves shall be selected to drive the fan at a speed that will produce the specified capacity when set at the approximate midpoint of the sheave adjustment. Motors for V-belt drives shall be provided with adjustable bases. Fan motors shall have [open] [splashproof] [totally enclosed] enclosures. Motor starters shall be [manual] [magnetic] [across-the-line] [reduced-voltage-start] type with [general-purpose] [weather-resistant] [watertight] enclosure. Unit fan or fans shall be selected to produce the required capacity at the fan static pressure. Sound power level shall be as indicated. The sound power level values shall be obtained according to AMCA 300 or ASHRAE 68.

2.10.2.6 Access Sections and Filter/Mixing Boxes

Access sections shall be provided where indicated and shall be furnished with access doors as shown. Access sections and filter/mixing boxes shall be constructed in a manner identical to the remainder of the unit casing and shall be equipped with access doors. Mixing boxes shall be designed to minimize air stratification and to promote thorough mixing of the air streams.

2.10.2.7 Diffuser Sections

Diffuser sections shall be furnished between the discharge of all supply fans [and cooling coils of blow-through single zone units] [and] [filter sections of those units with high efficiency filters located immediately downstream of the air handling unit fan section]. Diffuser sections shall be fabricated by the unit manufacturer in a manner identical to the remainder of the unit casing, shall be designed to be airtight under positive static pressures up to [2 kPa (8 inches water gauge)] [_____] kPa ([_____] inches water gauge), and shall have an access door on each side for inspection purposes. Diffuser section shall contain a perforated diffusion plate, fabricated of galvanized steel, Type 316 stainless steel, aluminum, or steel treated for corrosion with manufacturer's standard corrosion-resisting finish. The diffusion plate shall be designed to accomplish uniform air flow across the down-stream [coil] [filters] while reducing the higher fan outlet velocity to within plus or minus 5 percent of the required face velocity of the downstream component.

2.10.2.8 Dampers

Dampers shall be as specified in paragraph CONTROLS.

2.11 TERMINAL UNITS

2.11.1 Room Fan-Coil Units

Base units shall include galvanized coil casing, coil assembly drain pan [valve and piping package,] [outside air damper,] [wall intake box,] air filter, fans, motor, fan drive, and motor switch, plus an enclosure for cabinet models and casing for concealed models. Leveling devices integral with the unit shall be provided for vertical type units. Sound power levels shall be as indicated. Sound power level data or values for these units shall be obtained according to test procedures based on ARI 350. Sound power values apply to units provided with factory fabricated cabinet enclosures and standard grilles. Values obtained for the standard cabinet models will be acceptable for concealed models without separate test provided there is no variation between models as to the coil configuration, blowers, motor speeds, or relative arrangement of parts. Automatic valves and controls shall be provided as specified in paragraph CONTROLS. Each unit shall be fastened securely to the building structure. Capacity of the units shall be as indicated. Room fan-coil units shall be certified as complying with ARI 440, and shall meet the requirements of UL 1995.

2.11.1.1 Enclosures

Enclosures shall be fabricated of not lighter than 1.3 mm (18 gauge) steel, reinforced and braced. Front panels of enclosures shall be removable and provided with 13 mm (1/2 inch) thick dual density fibrous glass insulation. The exposed side shall be high density, erosion-proof material suitable for use in air streams with velocities up to 23 m/s (4,500 fpm). Discharge grille shall be [adjustable] [integrally stamped] and shall be of such design as to properly distribute air throughout the conditioned space. Plastic discharge and return grilles are acceptable provided the plastic material is certified by the manufacturer to be classified as flame resistant according to UL 94 and the material shall comply with the heat deflection criteria specified in UL 1995. Ferrous metal surfaces shall be galvanized or factory finished with corrosion resistant enamel. Access doors or removable panels shall be provided for piping and control compartments. Duct discharge collar shall be provided for concealed models. Enclosures shall have easy access for filter replacement.

2.11.1.2 Fans

Fans shall be galvanized steel or aluminum, multiblade, centrifugal type. In lieu of metal, fans and scrolls may be non-metallic materials of suitably reinforced compounds. Fans shall be dynamically and statically balanced. Surfaces shall be smooth. Assemblies shall be accessible for maintenance. Disassembly and re-assembly shall be by means of mechanical fastening devices and not by epoxies or cements.

2.11.1.3 Coils

Coils shall be constructed of not less than 10 mm (3/8 inch) outside diameter seamless copper tubing, with copper or aluminum fins mechanically bonded or soldered to the tubes. Coils shall be provided with not less than 12 mm (1/2 inch) outside diameter flare or sweat connectors, accessory piping package with thermal connections suitable for connection to the type of control valve supplied, and manual air vent. Coils shall be tested hydrostatically at 2000 kPa (300 psi) or under water at 1700 kPa (250 psi) air pressure and suitable for 1400 kPa (200 psi) working pressure. Provisions shall be made for coil removal.

2.11.1.4 Drain Pans

Drain and drip pans shall be sized and located to collect all water condensed on and dripping from any item within the unit enclosure or casing. Drain pans shall be constructed of not lighter than 0.9 mm (21 gauge) steel, galvanized after fabrication, thermally insulated to prevent condensation. Insulation shall have a flame spread rating not over 25 without evidence of continued progressive combustion, a smoke developed rating no higher than 50, and shall be of a waterproof type or coated with a waterproofing material. In lieu of the above, drain pans may be constructed of die-formed 0.85 mm (22 gauge) steel, formed from a single sheet, galvanized after fabrication, insulated and coated as specified for the 0.9 mm (21 gauge) material or of die-formed 0.9 mm (21 gauge) type 304 stainless steel, insulated as specified above. Drain pans shall be pitched to drain. Minimum 20 mm (3/4 inch) NPT or 15 mm (5/8 inch) OD drain connection shall be provided in drain pan. Auxiliary drain pans to catch drips from control and piping packages, eliminating insulation of the packages, may be plastic; if metal, the auxiliary pans shall comply with the requirements specified above. Insulation at control and piping connections thereto shall extend 25 mm minimum over the auxiliary drain pan.

2.11.1.5 Manually Operated Outside Air Dampers

Manually operated outside air dampers shall be provided according to the arrangement indicated. Dampers shall be parallel airfoil type and of galvanized construction. Blades shall rotate on stainless steel or nylon sleeve bearings.

2.11.1.6 Filters

Filters shall be of the fiberglass disposable type, 25 mm (1 inch) thick, conforming to CID A-A-1419. Filters in each unit shall be removable without the use of tools.

2.11.1.7 Motors

Motors shall be of the permanent split-capacitor type with built-in thermal overload protection, directly connected to unit fans. Motor switch shall be two or three speeds and off, manually operated, and shall be mounted on an identified plate [inside the unit below or behind an access door] [or] [adjacent to the room thermostat] [as indicated]. In lieu of the above fan speed control, a solid-state variable-speed controller having a minimum speed reduction of 50 percent may be provided. Motors shall have permanently-lubricated or oilable sleeve-type or combination ball and sleeve-type bearings with vibration isolating mountings suitable for continuous duty. Motor power consumption, shown in watts, at the fan operating speed selected to meet the specified capacity shall not exceed the following values:

Unit Capacity (L/s)	Maximum Power Consumption (Watts)
94	55
142	60
189	65
283	80
378	130
472	130

Unit Capacity (L/s)	Maximum Power Consumption (Watts)
566	130

2.11.2 Coil Induction Units

Base unit shall include air plenums, air-discharge nozzles, air discharge grilles, recirculation grilles, water coil assembly, valve and piping package, condensate drain pan, and adjustable air-balancing dampers, plus an enclosure for cabinet models and casing for concealed models. Each unit shall be selected to produce not less than the capacity indicated without exceeding the indicated static pressure. The sound power level shall be as indicated. Sound power level data or values for these units shall be based on tests conducted according to ANSI S12.32. Sound power values apply to units provided with factory fabricated cabinet enclosures and standard grilles. The values obtained for the standard cabinet models will be acceptable for concealed models without separate tests, provided there is no variation between models as to coil configuration, air discharge nozzles, air balancing dampers, or relative arrangement of parts. Automatic valves and controls shall be provided as specified in paragraph CONTROLS. Each unit shall be secured to the building structure. Capacity of the units shall be as indicated. The induction units shall conform to the provisions of ARI 445.

2.11.2.1 Enclosures

Enclosures shall be fabricated of not lighter than 1.2 mm (18 gauge) steel, reinforced and braced. Front panel of enclosure shall be removable and insulated when required acoustically and to prevent condensation. Discharge grilles shall be [adjustable] [integrally stamped] and shall properly distribute air throughout the conditioned space. Plastic discharge and return grilles are not acceptable. Access doors shall be provided for all piping and control compartments.

2.11.2.2 Air Plenums

Plenums shall be fabricated of galvanized steel with interior acoustically baffled and lined with sound absorbing material that will attenuate the sound power from the primary air supply to the room. Heat-resistant nozzles shall be integral with or attached airtight to the plenum. Where coil induction units are supplied with vertical runouts, a streamlined, vaned, mitered elbow transition piece shall be provided for connection between the unit and ductwork. An adjustable air-balancing damper shall be provided in each unit.

2.11.2.3 Coils

Coils shall be constructed of not less than 10 mm (3/8 inch) outside diameter seamless copper tubing, with copper or aluminum fins, mechanically bonded or soldered to the tubes. Coil connections shall be provided with not less than 15 mm (1/2 inch) outside diameter flare or sweat connectors, accessory piping package with terminal connections suitable for connection to the type of control valve supplied, and manual air vent. Coils shall be tested hydrostatically at 2000 kPa (300 psi) or under water at 1700 kPa (250 psi) air pressure and shall be suitable for 1400 kPa (200 psi) working pressure.

2.11.2.4 Screens

Lint screens or throwaway filters shall be provided for each unit and shall be easily accessible.

2.11.2.5 Drain Pan

Drain and drip pans shall be sized and located to collect condensed water dripping from any item within the unit enclosure. Drain pans shall be constructed of not lighter than 0.9 mm (21 gauge) steel, galvanized after fabrication, and thermally insulated to prevent condensation. Insulation shall have a flame spread rating not over 25 without evidence of continued progressive combustion, a smoke developed rating no higher than 50, and be of a waterproof type or coated with a waterproofing material. In lieu of the above, drain pans may be constructed of die-formed 0.8 mm (22 gauge) steel, formed from a single sheet and galvanized after fabrication and insulated and coated as for the 0.9 mm (21 gauge) steel material or of die-formed 0.9 mm (21 gauge) type 304 stainless steel insulated as specified above. Drain pans shall be pitched to drain. Drain connection shall be provided when a condensate drain system is indicated. Connection shall be minimum 20 mm (3/4 inch) NPT or 15 mm (5/8 inch) OD.

2.11.3 Variable Air Volume (VAV) and Dual Duct Terminal Units

VAV and dual duct terminal units shall be the type, size, and capacity shown and shall be mounted in the ceiling or wall cavity and shall be suitable for single or dual duct system applications. Actuators and controls shall be as specified in paragraph CONTROLS. Unit enclosures shall be constructed of galvanized steel not lighter than 0.85 mm (22 gauge) or aluminum sheet not lighter than 1.3 mm (18 gauge). Single or multiple discharge outlets shall be provided as required. Units with flow limiters are not acceptable. Unit air volume shall be factory preset and readily field adjustable without special tools. Reheat coils shall be provided as indicated. A flow chart shall be attached to each unit. Acoustic performance of the terminal units shall be based upon units tested according to ARI 880. Sound power level shall be as indicated. Discharge sound power shall be shown for minimum and [375] [_____] Pa ([1-1/2], and [_____] inches water gauge) inlet static pressure. Acoustical lining shall be according to NFPA 90A.

2.11.3.1 Constant Volume, Single Duct

Constant volume, single duct, terminal units shall contain within the casing, a mechanical or pneumatic constant volume regulator. Volume regulators shall control air delivery to within plus or minus 5 percent of specified air flow subjected to inlet pressure from 200 to 1500 Pa (3/4 to 6 inch water gauge).

2.11.3.2 Variable Volume, Single Duct

Variable volume, single duct, terminal units shall be provided with a calibrated air volume sensing device, air valve or damper, actuator, and accessory relays. Units shall control air volume to within plus or minus 5 percent of each air set point volume as determined by the thermostat with variations in inlet pressures from 200 to 1500 Pa (3/4 to 6 inch water gauge). Internal resistance of units shall not exceed 100 Pa (0.4 inch water gauge) at maximum flow range. External differential pressure taps separate from the control pressure taps shall be provided for air flow measurement with a 0 to 250 Pa (0 to 1 inch water gauge) range. Unit

volume controller shall be normally [open] [closed] upon loss of pneumatic pressure.

2.11.3.3 Variable Volume, Single Duct, Fan-Powered

Variable volume, single duct, fan-powered terminal units shall be provided with a calibrated air volume sensing device, air valve or damper, actuator, fan and motor, and accessory relays. Units shall control primary air volume to within plus or minus 5 percent of each air set point as determined by the thermostat with variations in inlet pressure from 200 to 1500 Pa (3/4 to 6 inch water gauge). Unit fan shall be centrifugal, direct-driven, double-inlet type with forward curved blades. Fan motor shall be either single speed with speed controller or three-speed, permanently lubricated, permanent split-capacitor type. Fan/motor assembly shall be isolated from the casing to minimize vibration transmission. Fan control shall be factory furnished and wired into the unit control system. A factory-mounted pressure switch shall be furnished to operate the unit fan whenever pressure exists at the unit primary air inlet or when the control system fan operates.

2.11.3.4 Dual Duct Terminal Units

Dual duct terminal units shall be provided with hot and cold inlet valve or dampers. Dampers shall be controlled in unison by single or dual actuators. Actuator shall be as specified in paragraph CONTROLS. Unit shall control delivered air volumes within plus or minus 5 percent with inlet air variations from 250 to 2000 Pa (1 to 8 inch water gauge) in either duct. Mixing baffles shall be included with the unit casing. Cabinet and closed duct leakage shall not exceed 2 percent of maximum rated air volume. Internal resistance of units shall not exceed [_____] Pa ([_____] inch water gauge) at maximum flow range.

2.11.3.5 Ceiling Induction Unit

Ceiling induction unit shall be provided with a calibrated primary air volume sensing device, primary air valve, induced air damper, and insulated induction tube. Unit shall be arranged to induce air from the ceiling plenum to maintain a maximum total flow circulated to the conditioned space. Primary air shall be varied upon demand of the room thermostat. Upon a demand for maximum cooling, the unit shall deliver 100 percent primary air and, at minimum cooling, shall deliver [50] [25] percent primary air. Terminal unit shall be capable of closing to full shut off without additional actuators or linkage changes. Terminals shall reset primary air volume within plus or minus 5 percent determined by the thermostat regardless of upstream changes in the static pressure. Minimum inlet static pressure shall not exceed 250 Pa (1 inch water gauge), including a maximum of 75 Pa (0.3 inch water gauge) downstream static pressure. External differential pressure taps separate from control pressure taps shall be provided for primary air flow measurement with 0 to 250 Pa (0 to 1 inch water gauge) range. Each unit shall be normally [open] [closed] upon loss of pneumatic pressure. Actuator and accuracy controls shall be completely factory piped requiring only field installation of 138 kPa (20 psi) pneumatic main air and room thermostat.

2.11.3.6 Reheat Units

a. Hot Water Coils: Hot-water coils shall be fin-and-tube type constructed of seamless copper tubes and copper or aluminum fins mechanically bonded or soldered to the tubes. Headers shall be

constructed of cast iron, welded steel or copper. Casing and tube support sheets shall be 1.6 mm (16 gauge), galvanized steel, formed to provide structural strength. Tubes shall be correctly circuited for proper water velocity without excessive pressure drop and they shall be drainable where required or indicated. At the factory, each coil shall be tested at not less than 1700 kPa (250 psi) air pressure and shall be suitable for 1400 kPa (200 psi) working pressure. Drainable coils shall be installed in the air handling units with a pitch of not less than 10 mm per m (1/8 inch per foot) of tube length toward the drain end. Coils shall conform to the provisions of ARI 410.

b. Steam Coils: Steam coils shall be constructed of cast semisteel, welded steel, or copper headers, red-brass or copper tubes, and copper or aluminum fins mechanically bonded or soldered to the tubes. Tubes shall be rolled and bushed, brazed or welded into headers. Coil casings and tube support sheets, with collars of ample width, shall be not lighter than 1.6 mm (16 gauge) galvanized steel formed to provide structural strength. When required, multiple tube supports shall be provided to prevent tube sag. The fin tube and header section shall float within the casing to allow free expansion of tubing for coils subject to high pressure steam service. Coils shall be factory pressure tested and capable of withstanding 1700 kPa (250 psi) hydrostatic test pressure or 1400 kPa (250 psi) air pressure, and shall be for [700] [1400] kPa ([100] [200] psi) steam working pressure. Preheat coils shall be steam-distribution tube type with condensing tubes having not less than 15 mm (5/8 inch) outside diameters. Distribution tubes shall have not less than 10 mm (3/8 inch) outside diameter, with orifices to discharge steam to condensing tubes. Distribution tubes shall be installed concentric inside of condensing tubes and shall be held securely in alignment. The maximum length of a single coil shall be limited to 120 times the diameter of the outside tube. Other heating coils shall be single tube type with not less than 12 mm (1/2 inch) outside diameter. Supply headers shall distribute steam evenly to all tubes at the indicated steam pressure. Coils shall conform to the provisions of ARI 410.

c. Electric Resistance Heaters: Electric resistance heaters shall be of the duct-mounting type consisting of a nickel-chromium resistor mounted on refractory material and a steel or aluminum frame for attachment to ductwork. Electric duct heater shall meet the requirement of Underwriters Laboratories and NFPA 70 and shall be provided with a built-in or surface-mounted high-limit thermostat. Electric duct heaters shall be interlocked electrically so that heaters cannot be energized unless the fan is running.

2.11.4 Unit Ventilators

Unit ventilators shall include an enclosure, [galvanized casing,] [cold-rolled steel casing with corrosion resistant coating,] coil assembly, [resistance heating coil assembly,] [valve and piping package,] drain pan, air filters, fan assembly, fan drive, motor, motor controller, dampers, and damper operators. Sound power level shall be as indicated. Sound power level data or values for these units shall be obtained according to test procedures based on ARI 350. Sound power values apply to units provided with factory fabricated cabinet enclosures and standard grilles, when handling standard flow for which the unit air capacity is rated. Each unit

shall be secured to the building structure. Capacity of the unit ventilators shall be as indicated. Unit ventilators shall be of the year-round classroom type with automatic controls arranged to properly heat, cool, and ventilate the room. Automatic valves and controls shall be provided as specified in paragraph CONTROLS. Sequence of control shall be any one of the standard ANSI cycles specified in paragraph CONTROLS.

2.11.4.1 Enclosures

Enclosures shall be fabricated of not lighter than 1.6 mm (16 gauge) galvanized steel, reinforced and braced, or all welded framework with panels to provide equivalent strength. The casing shall be acoustically and thermally insulated internally with not less than 13 mm (1/2 inch) thick dual density fibrous glass insulation. The exposed side shall be high density, erosion-proof material suitable for use in air streams with velocities up to 246 m/s (4500 fpm). The insulation shall be fastened with waterproof, fire-resistant adhesive. Front panel shall be designed for easy removal by one person. [Discharge grilles shall have adjustable grilles or grilles with adjustable vanes and] [Discharge grilles] shall properly distribute air throughout the conditioned space. Return grilles shall be removable where front panel does not provide access to interior components. Plastic discharge or return grilles are not acceptable. Removable panels or access doors shall be provided for all piping and control compartments. Fan switch shall be key operated or accessible through a locked access panel. Gaskets shall be provided at the back and bottom of the unit for effective air seal, as required.

2.11.4.2 Electric Resistance Heating Elements

Electric resistance heating elements shall be of the sheathed, finned, tubular type, or of the open resistance type designed for direct exposure to the air stream. Heating element electrical characteristics shall be as indicated. Where fan motor or control voltage is lower than required for the electric resistance heating element, a fused factory mounted and wired transformer shall be provided.

2.11.4.3 Fans

Fans shall be of the galvanized steel or aluminum, multiblade, centrifugal type, dynamically and statically balanced. Fan housings shall be provided with resilient mounted, self-aligning permanently lubricated ball bearings, sleeve bearings, or combination ball and sleeve bearings, capable of not less than 2000 hours of operation on one oiling. Fans shall be direct-connected.

2.11.4.4 Coils

Coils shall be circuited for a maximum water velocity of 2.4 m/s (8 fps) without excessive pressure drop and shall otherwise be as specified for hot water coils in paragraph TERMINAL UNITS.

2.11.4.5 Drain Pans

Drain and drip pans shall be sized and located to collect all condensed water dripping from any item within the unit enclosure. Drain pans shall be constructed of not lighter than 1.2 mm (18 gauge) steel, galvanized after fabrication, and thermally insulated to prevent condensation. Insulation shall be coated with a fire-resistant waterproofing material. In lieu of the above, drain pans may be constructed of die-formed 1.0 mm

(20 gauge) steel, formed from a single sheet and galvanized after fabrication and insulated and coated as for the 1.2 mm (18 gauge) steel material, or of die-formed 1.3 mm (18 gauge) type 304 stainless steel insulated as specified above. Drain pans shall be pitched to drain. Drain connection shall be provided when a condensate drain system is indicated. Connection shall be minimum 20 mm (3/4 inch) NDT or 18 mm (5/8 inch) OD.

2.11.4.6 Filters

Fiberglass disposable type, 25 mm (1 inch) thick, conforming to CID A-A-1419, installed upstream of coil.

2.11.4.7 Dampers

An outside air proportioning damper shall be provided on each unit. In addition, a vane shall be provided to prevent excessive outside air from entering unit and to prevent blow-through of outside air through the return air grille under high wind pressures. Where outside air and recirculated air proportioning dampers are provided on the unit, an additional vane will not be required. Face and bypass dampers shall be provided for each unit to ensure constant air volume at all positions of the dampers. Each unit shall be provided with a factory installed control cam assembly, pneumatic motor, or electric motor to operate the face and bypass dampers and outside air damper or outside air and recirculated air dampers in the sequence as specified in paragraph CONTROLS.

2.11.4.8 Motors

Motors shall be of the permanent split-capacitor type with built-in thermal overload protection and automatic reset. Motor shall be mounted on a resilient mounting, isolated from the casing and shall be suitable for operation on electric service available. A manually operated motor switch shall provide for 2 or 3 speeds and off and shall be mounted on an identified plate [inside the unit below or behind an access door] [or] [adjacent to the room thermostat] [as indicated]. In lieu of speed control, a solid state variable speed controller having minimum speed reduction of 50 percent may be provided.

2.11.4.9 Outside Air Intakes

Outside air intakes shall be the manufacturer's standard design and provided with 13 mm mesh bird screen or louvers on 13 mm centers.

2.12 ENERGY RECOVERY DEVICES

2.12.1 Rotary Wheel

Unit shall be a factory fabricated and tested assembly for air-to-air energy recovery by transfer of sensible heat from exhaust air to supply air stream. Device performance shall be according to ASHRAE 84. Device shall deliver an energy transfer effectiveness of not less than [70] [85] [_____] percent with cross-contamination not in excess of [0.1] [1.0] [_____] percent of exhaust airflow rate at system design differential pressure, including purging sector if provided with wheel. Exchange media shall be chemically inert, moisture-resistant, fire-retardant, laminated, nonmetallic material which complies with NFPA 90A. Exhaust and supply streams shall be isolated by seals which are static, field adjustable, and replaceable. Chain drive mechanisms shall be fitted with ratcheting torque limiter or slip-clutch protective device. Enclosure shall be fabricated

from galvanized steel and shall include maintenance access provisions. Recovery control and rotation failure provisions shall be as indicated.

2.12.2 Run-Around-Coil

Assembly shall be factory fabricated and tested air-to-liquid-to-air energy recovery system for transfer of sensible heat from exhaust air to supply air stream. System shall deliver an energy transfer effectiveness not less than that indicated without cross-contamination with maximum energy recovery at minimum life cycle cost. Components shall be computer optimized for capacity, effectiveness, number of coil fins per inch, number of coil rows, flow rate, heat transfer rate of [_____] percent by volume of [ethylene] [propylene] glycol solution, and frost control. Coils shall conform to paragraph AIR HANDLING UNITS. Related pumps, and piping specialties shall conform to requirements of [Section 15652 COLD STORAGE REFRIGERATION SYSTEMS] [Section 15556 FORCED HOT WATER HEATING SYSTEMS USING WATER AND STEAM HEAT EXCHANGERS] [Section 15653AIR-CONDITIONING SYSTEM (UNITARY-TYPE)]. System controls shall be as indicated.

2.12.3 Heat Pipe

Device shall be a factory fabricated, assembled and tested, counterflow arrangement, air-to-air heat exchanger for transfer of sensible heat between exhaust and supply streams. Device shall deliver an energy transfer effectiveness not less than that indicated without cross-contamination. Heat exchanger tube core shall be [15] [18] [25] mm ([1/2] [5/8] [1] inch) nominal diameter, seamless aluminum or copper tube with extended surfaces, utilizing wrought aluminum Alloy 3003 or Alloy 5052, temper to suit. Maximum fins per unit length and number of tube rows shall be as indicated. Tubes shall be fitted with internal capillary wick, filled with an ASHRAE 15, Group 1 refrigerant working fluid, selected for system design temperature range, and hermetically sealed. Heat exchanger frame shall be constructed of not less than 1.6 mm (16 gauge) galvanized steel and fitted with intermediate tube supports, and flange connections. Tube end-covers and a partition of galvanized steel to separate exhaust and supply air streams without cross-contamination and in required area ratio shall be provided. [A drain pan constructed of welded Type 300 series stainless steel shall be provided.] Heat recovery regulation shall be provided by [system face and bypass dampers and related control system as indicated] [interfacing with manufacturer's standard tilt-control mechanism for summer/winter operation, regulating the supply air temperature and frost prevention on weather face of exhaust side at temperature indicated]. Coil shall be fitted with pleated flexible connectors.

2.13 FACTORY PAINTING

Units which are not of galvanized construction according to ASTM A 123or ASTM A 924 shall be factory painted with a corrosion resisting paint finish. Internal and external ferrous metal surfaces shall be cleaned, phosphatised and coated with a paint finish which has been tested according to ASTM B 117, ASTM D 1654, and ASTM D 3359. Evidence of satisfactory paint performance for a minimum of 125 hours for units to be installed indoors and 500 hours for units to be installed outdoors shall be submitted. Rating of failure at the scribe mark shall be not less than 6, average creepage not greater than 3 mm. Rating of the inscribed area shall not be less than 10, no failure. On units constructed of galvanized steel which have been welded, exterior surfaces of welds or welds that have burned through from the interior shall receive a final shop docket of zinc-rich protective paint according to ASTM D 520 Type I.

PART 3 EXECUTION

3.1 INSTALLATION

Work shall be installed as shown and according to the manufacturer's diagrams and recommendations.

3.1.1 Piping

Pipe and fitting installation shall conform to the requirements of ASME B31.1. Pipe shall be cut accurately to measurements established at the jobsite, and worked into place without springing or forcing, completely clearing all windows, doors, and other openings. Cutting or other weakening of the building structure to facilitate piping installation will not be permitted without written approval. Pipe or tubing shall be cut square, shall have burrs removed by reaming, and shall permit free expansion and contraction without causing damage to the building structure, pipe, joints, or hangers. Changes in direction shall be made with fittings, except that bending of pipe 100 mm (4 inches) and smaller will be permitted, provided a pipe bender is used and wide sweep bends are formed. The centerline radius of bends shall not be less than 6 diameters of the pipe. Bent pipe showing kinks, wrinkles, flattening, or other malformations will not be accepted. Horizontal supply mains shall pitch down in the direction of flow as indicated. The grade shall be not less than 2 mm in 1 m. Reducing fittings shall be used for changes in pipe sizes. Open ends of pipelines and equipment shall be capped or plugged during installation to keep dirt or other foreign materials out of the system. Pipe not otherwise specified shall be uncoated. Connections to appliances shall be made with malleable iron unions for steel pipe 65 mm (2-1/2 inches) or less in diameter, and with flanges for pipe 80 mm (3 inches) and larger. Connections between ferrous and copper piping shall be electrically isolated from each other with dielectric unions or flanges. All piping located in air plenums shall conform to NFPA 90Arequirements. Pipe and fittings installed in inaccessible conduits or trenches under concrete floor slabs shall be welded.

3.1.1.1 Joints

a. Threaded Joints: Threaded joints shall be made with tapered threads and made tight with a stiff mixture of graphite and oil or polytetrafluoroethylene tape or equivalent thread joint compound or material, applied to the male threads only.

b. Soldered Joints: Joints in copper tubing shall be cut square with ends reamed, and all filings and dust wiped from interior of pipe. Joints shall be soldered with 95/5 solder or brazed with silver solder applied and drawn through the full fitting length. Care shall be taken to prevent annealing of tube or fittings when making connections. Joints 65 mm (2-1/2 inches) and larger shall be made with heat uniformly around the entire circumference of the joint with a multi-flame torch. Connections in floor slabs shall be brazed. Excess solder shall be wiped from joint before solder hardens.

c. Welded Joints: [Welding shall be according to qualified procedures using qualified welders and welding operators. Procedures and welders shall be qualified according to ASME BPV IX. Welding procedures qualified by others and welders and welding

operators qualified by another operator may be permitted by ASME B31.1. Structural members shall be welded according to Section 05055 WELDING, STRUCTURAL. All welds shall be permanently identified by imprinting the welder's or welding operator's assigned symbol adjacent to the weld.] [Welding and nondestructive testing procedures are specified in Section 15052 WELDING PRESSURE PIPING.] Welded joints shall be fusion welded unless otherwise required. Changes in direction of piping shall be made with welding fittings only; mitering or notching pipe to form elbows and tees or other similar type construction will not be permitted. Branch connections may be made with either welding tees or branch outlet fittings. Branch outlet fittings shall be forged, flared for improvement of flow where attached to the run, and reinforced against external strains. Beveling, alignment, heat treatment and inspection of weld shall conform to ASME B31.1. Weld defects shall be removed and repairs made to the weld, or the weld joints shall be entirely removed and rewelded. Electrodes shall be stored and dried according to AWS D1.1 or as recommended by the manufacturer. Electrodes that have been wetted or that have lost any of their coating shall not be used.

3.1.1.2 Grooved Mechanical Joints

Grooves shall be prepared according to the coupling manufacturer's instructions. Pipe and groove dimensions shall comply with the tolerances specified by the coupling manufacturer. The diameter of grooves made in the field shall be measured using a "go/no-go" gauge, vernier or dial caliper, or narrow-land micrometer. Groove width and dimension of groove from end of pipe shall be measured and recorded for each change in grooving tool setup to verify compliance with coupling manufacturer's tolerances. Grooved joints shall not be used in concealed locations.

3.1.1.3 Flanges and Unions

Except where copper tubing is used, union or flanged joints shall be provided in each line immediately preceding the connection to each piece of equipment or material requiring maintenance such as coils, pumps, control valves, and other similar items.

3.1.2 Supports

3.1.2.1 General

Hangers used to support piping 50 mm (2 inches) and larger shall be fabricated to permit adequate adjustment after erection while still supporting the load. Pipe guides and anchors shall be installed to keep pipes in accurate alignment, to direct the expansion movement, and to prevent buckling, swaying, and undue strain. Piping subjected to vertical movement when operating temperatures exceed ambient temperatures shall be supported by variable spring hangers and supports or by constant support hangers.

3.1.2.2 Seismic Requirements (Pipe Supports and Structural Bracing)

Piping and attached valves shall be supported and braced to resist seismic loads [as specified under Section 13080 SEISMIC PROTECTION FOR MECHANICAL, ELECTRICAL EQUIPMENT] [as shown on the drawing]. Structural steel required for reinforcement to properly support piping, headers, and equipment but not shown shall be provided under this section. Material used for support

shall be as specified under Section 05210 STEEL JOISTS.

3.1.2.3 Pipe Hangers, Inserts and Supports

Pipe hangers, inserts, and supports shall conform to MSS SP-58 and MSS SP-69, except as modified herein. Types 5, 12, and 26 shall not be used.

a. Hangers: Type 3 shall not be used on insulated piping.

b. Inserts: Type 18 inserts shall be secured to concrete forms before concrete is placed. Continuous inserts which allow more adjustment may be used if they otherwise meet the requirements for Type 18 inserts.

c. C-Clamps: Type 19 and 23 C-clamps shall be torqued per MSS SP-69 and have both locknuts and retaining devices, furnished by the manufacturer. Field-fabricated C-clamp bodies or retaining devices are not acceptable.

d. Angle Attachments: Type 20 attachments used on angles and channels shall be furnished with an added malleable-iron heel plate or adapter.

e. Hangers: Type 24 may be used only on trapeze hanger systems or on fabricated frames.

f. Type 39 saddles shall be used on all insulated pipe 100 mm (4 inches) and larger when the temperature of the medium is above 15.5 degrees C. Type 39 saddles shall be welded to the pipe.

g. Type 40 shields shall:

(1) be used on all insulated pipes less than 100 mm (4 inches).

(2) be used on all insulated pipes 100 mm (4 inches) and larger when the temperature of the medium is 15.5 degrees C or less.

(3) have a high density insert for pipe 50 mm (2 inches) and larger, and for smaller pipe when the insulation shows signs of being visibly compressed, or when the insulation or jacket shows visible signs of distortion at or near the type 40 shield. High density inserts shall have a density of 144 kg/cubic meter (9 pcf) or greater.

h. Horizontal Pipe Supports: Horizontal pipe supports shall be spaced as specified in MSS SP-69 and a support shall be installed not over 300 mm (1 foot) from the pipe fitting joint at each change in direction of the piping. Pipe supports shall be spaced not over 1.5 m apart at valves. [Pipe hanger loads suspended from steel joist with hanger loads between panel points in excess of 220 N (50 pounds) shall have the excess hanger loads suspended from panel points.]

i. Vertical Pipe Supports: Vertical pipe shall be supported at each floor, except at slab-on-grade, and at intervals of not more than 5 m, not more than 2.4 m from end of risers, and at vent terminations.

j. Pipe Guides: Type 35 guides using steel reinforced

polytetrafluoroethylene (PTFE) or graphite slides shall be provided where required to allow longitudinal pipe movement. Lateral restraints shall be provided as required. Slide materials shall be suitable for the system operating temperatures, atmospheric conditions, and bearing loads encountered.

k. Steel Slides: Where steel slides do not require provisions for restraint of lateral movement, an alternate guide method may be used. On piping 100 mm (4 inches) and larger with medium 15.5 degrees C or greater, a Type 39 saddle may be welded to the pipe and freely rest on a steel plate. On piping under 100 mm (4 inches), a Type 40 protection shield may be attached to the pipe or insulation and freely rest on a steel slide plate.

l. High Temperature Guides with Cradles: Where there are high system temperatures and welding to piping is not desirable, the Type 35 guide shall include a pipe cradle, welded to the guide structure and strapped securely to the pipe. The pipe shall be separated from the slide material by at least 100 mm, or by an amount adequate for the insulation, whichever is greater.

m. Insulated Pipe: Insulation on horizontal pipe shall be continuous through hangers for hot and cold piping. Other requirements on insulated pipe are specified in Section 15250 THERMAL INSULATION FOR MECHANICAL SYSTEMS.

3.1.3 Anchors

Anchors shall be provided wherever necessary or indicated to localize expansion or to prevent undue strain on piping. Anchors shall consist of heavy steel collars with lugs and bolts for clamping and attaching anchor braces, unless otherwise indicated. Anchor braces shall be installed in the most effective manner to secure the desired results using turnbuckles where required. Supports, anchors, or stays shall not be attached where they will injure the structure or adjacent construction during installation or by the weight of expansion of the pipeline.

3.1.4 Pipe Sleeves

Sleeves shall not be installed in structural members except where indicated or approved. Rectangular and square openings shall be as detailed. Each sleeve shall extend through its respective wall, floor, or roof, and shall be cut flush with each surface. Pipes passing through concrete or masonry wall or concrete floors or roofs shall be provided with pipe sleeves fitted into place at the time of construction. Unless otherwise indicated, sleeves shall provide a minimum of 6 mm all-around clearance between bare pipe and sleeves or between jacket over insulation and sleeves. Sleeves in bearing walls, waterproofing membrane floors, and wet areas shall be steel pipe or cast iron pipe. Sleeves in non-bearing walls, floors, or ceilings may be steel pipe, cast iron pipe, galvanized sheet metal with lock-type longitudinal seam and of the metal thickness indicated, or moisture resistant fiber or plastic. Except in pipe chases or interior walls, the annular space between pipe and sleeve or between jacket over insulation and sleeve, in non-fire rated walls, shall be sealed as indicated and specified in Section 07920 JOINT SEALING. Pipes passing through wall waterproofing membrane shall be sleeved as specified above, and a waterproofing clamping flange shall be installed as indicated.

3.1.4.1 Roof and Floor Sleeves

Pipes passing through roof or floor waterproofing membrane shall be installed through a 17-ounce copper sleeve or a 0.8 mm thick aluminum sleeve, each within an integral skirt or flange. Flashing sleeve shall be suitably formed, and skirt or flange shall extend not less than 200 mm from the pipe and shall be set over the roof or floor membrane in a troweled coating of bituminous cement. Unless otherwise shown, the flashing sleeve shall extend up the pipe a minimum of 50 mm above highest floor level or a minimum of 250 mm above the roof. The annular space between the flashing sleeve and the bare pipe or between the flashing sleeve and the metal-jacket-covered insulation shall be sealed as indicated. Pipes up to and including 250 mm (10 inches) in diameter passing through roof or floor waterproofing membrane may be installed through a cast iron sleeve with caulking recess, anchor lugs, flashing clamp device, and pressure ring with brass bolts. Waterproofing membrane shall be clamped into place and sealant shall be placed in the caulking recess. In lieu of a waterproofing clamping flange and caulking and sealing of annular space between pipe and sleeve or conduit and sleeve, a modular mechanical type sealing assembly may be installed. Seals shall consist of interlocking synthetic rubber links shaped to continuously fill the annular space between the pipe/conduit and sleeve with corrosion protected carbon steel bolts, nuts, and pressure plates. Links shall be loosely assembled with bolts to form a continuous rubber belt around the pipe with a pressure plate under each bolt head and each nut. After the seal assembly is properly positioned in the sleeve, tightening of the bolt shall cause the rubber sealing elements to expand and provide a watertight seal between the pipe/conduit and the sleeve. Each seal assembly shall be sized as recommended by the manufacturer to fit the pipe/conduit and sleeve involved.

3.1.4.2 Fire Seal

Where pipes pass through firewalls, fire partitions, or floors, a fire seal shall be provided as specified in Section 07270 FIRESTOPPING.

3.1.4.3 Escutcheons

Escutcheons shall be provided at finished surfaces where exposed piping, bare or insulated, passes through floors, walls, or ceilings except in boiler, utility, or equipment rooms. Where sleeves project slightly from floors, special deep-type escutcheons shall be used. Escutcheons shall be secured to pipe or pipe covering.

3.1.5 Condensate Drain Lines

Water seals shall be provided in the condensate drain from all [units.] [units except room [fan-coil units] [and] [coil-induction units]]. The depth of each seal shall be 50 mm plus 0.1 mm for each Pa, of the total static pressure rating of the unit to which the drain is connected. Water seals shall be constructed of 2 tees and an appropriate U-bend with the open end of each tee plugged. Pipe cap or plug cleanouts shall be provided where indicated. Drains indicated to connect to the sanitary waste system shall be connected by an indirect waste fitting. Air conditioner drain lines shall be insulated as specified in Section 15250 THERMAL INSULATION FOR MECHANICAL SYSTEMS.

3.1.6 Pipe-Alignment Guides

Pipe-alignment guides shall be provided where indicated for expansion

loops, offsets, and bends and as recommended by the manufacturer for expansion joints, not to exceed 1.5 m on each side of each expansion joint, and in lines 100 mm (4 inches) or smaller not more than 600 mm on each side of the joint.

3.1.7 Air Vents and Drains

3.1.7.1 Vents

Air vents shall be provided at high points, on water coils, and where indicated to ensure adequate venting of the piping system.

3.1.7.2 Drains

Drains shall be provided at low points and where indicated to ensure complete drainage of the piping. Drains shall be accessible, and shall consist of nipples and caps or plugged tees unless otherwise indicated.

3.1.8 Valves

Isolation gate or ball valves shall be installed on each side of each piece of equipment such as pumps, heaters, heating or cooling coils, and other similar items, at the midpoint of all looped mains, and at any other points indicated or required for draining, isolating, or sectionalizing purposes. Isolation valves may be omitted where balancing cocks are installed to provide both balancing and isolation functions. Each valve except check valves shall be identified. Valves in horizontal lines shall be installed with stems horizontal or above.

3.1.9 Equipment and Installation

Frames and supports shall be provided for tanks, compressors, pumps, valves, air handling units, fans, coils, dampers, and other similar items requiring supports. Air handling units shall be floor mounted or ceiling hung, as indicated. The method of anchoring and fastening shall be as detailed. Floor-mounted equipment, unless otherwise indicated, shall be set on not less than 150 mm (6 inch) concrete pads or curbs doweled in place. Concrete foundations for circulating pumps shall be heavy enough to minimize the intensity of the vibrations transmitted to the piping and the surrounding structure, as recommended in writing by the pump manufacturer. In lieu of a concrete pad foundation, a concrete pedestal block with isolators placed between the pedestal block and the floor may be provided. The concrete foundation or concrete pedestal block shall be of a mass not less than three times the weight of the components to be supported. Lines connected to the pump mounted on pedestal blocks shall be provided with flexible connectors. Foundation drawings, bolt-setting information, and foundation bolts shall be furnished prior to concrete foundation construction for all equipment indicated or required to have concrete foundations. Concrete for foundations shall be as specified in Section 03300 CAST-IN-PLACE STRUCTURAL CONCRETE.

3.1.10 Access Panels

Access panels shall be provided for concealed valves, vents, controls, dampers, and items requiring inspection or maintenance. Access panels shall be of sufficient size and located so that the concealed items may be serviced and maintained or completely removed and replaced. Access panels shall be as specified in Section 05500 MISCELLANEOUS METALS.

3.1.11 Flexible Connectors

Pre-insulated flexible connectors and flexible duct shall be attached to other components in accordance with the latest printed instructions of the manufacturer to ensure a vapor tight joint. Hangers, when required to suspend the connectors, shall be of the type recommended by the connector or duct manufacturer and shall be provided at the intervals recommended.

3.1.12 Sleeved and Framed Openings

Space between the sleeved or framed opening and the duct or the duct insulation shall be packed as specified in Section 07270 FIRESTOPPING for fire rated penetrations. For non-fire rated penetrations, the space shall be packed as specified in Section 07920 JOINT SEALING.

3.1.13 Metal Ductwork

Installation shall be according to SMACNA-06 unless otherwise indicated. Duct supports for sheet metal ductwork shall be according to SMACNA-06, unless otherwise specified. Friction beam clamps indicated in SMACNA-06 shall not be used. Risers on high velocity ducts shall be anchored in the center of the vertical run to allow ends of riser to move due to thermal expansion. Supports on the risers shall allow free vertical movement of the duct. Supports shall be attached only to structural framing members and concrete slabs. Supports shall not be anchored to metal decking unless a means is provided and approved for preventing the anchor from puncturing the metal decking. Where supports are required between structural framing members, suitable intermediate metal framing shall be provided. Where C-clamps are used, retainer clips shall be provided.

3.1.13.1 Underground Ductwork

Underground ductwork shall be PVC plastisol coated galvanized steel with coating on interior and exterior surfaces and watertight joints. Ductwork shall be installed as indicated, according to ACCA Manual 4 and manufacturer's instructions. Maximum burial depth shall be 2 m.

3.1.13.2 Radon Exhaust Ductwork

Subslab suction piping shall be perforated where indicated. PVC joints shall be installed as specified in ASTM D 2855.

3.1.13.3 Light Duty Corrosive Exhaust Ductwork

Light duty corrosive exhaust ductwork shall be PVC plastisol coated galvanized steel with PVC coating on interior [surfaces.] [and exterior surfaces] [and epoxy wash primer coating on exterior surfaces].

3.1.14 Fibrous Glass Ductwork

Installation shall be according to the manufacturer's written recommendations unless otherwise required in NAIMA-01. Duct supports for fibrous glass ductwork shall conform to NAIMA-01. In those cases not covered in NAIMA-01, the written recommendation of the fibrous duct manufacturer shall be followed.

3.1.15 FRP Ductwork

Fibrous glass reinforced plastic ducting and related structures shall

conform to SMACNA-01. Flanged joints shall be provided where indicated. Crevice-free butt lay-up joints are acceptable where flanged joints are not indicated. When ambient temperatures are lower than 10 degrees C, joints shall be heat cured by exothermic reaction heat packs.

3.1.16 Kitchen Exhaust Ductwork

3.1.16.1 Ducts Conveying Smoke and Grease Laden Vapors

Ducts conveying smoke and grease laden vapors shall conform to requirements of NFPA 96. Seams, joints, penetrations, and duct-to-hood collar connections shall have a liquid tight continuous external weld. Duct material shall be [minimum 1.3 mm (18 gauge), Type 304L or 316L, stainless steel] [minimum 1.6 mm (16 gauge) carbon steel]. [Duct construction shall include external perimeter angle iron welded joint reinforcement on 600 mm centers; continuously welded companion angle bolted flanged joints with flexible ceramic cloth gaskets where indicated; pitched to drain at low points; welded pipe coupling-plug drains at low points; welded fire protection and detergent cleaning penetration; steel framed, stud bolted, and flexible ceramic cloth gasketed cleaning access provisions where indicated.]

3.1.16.2 Exposed Ductwork

Exposed ductwork shall be fabricated from minimum 1.3 mm (18 gauge), Type 304L or 316L, stainless steel with continuously welded joints and seams. Ducts shall be pitched to drain at hoods and low points indicated. Surface finish shall match hoods.

3.1.16.3 Concealed Ducts Conveying Moisture Laden Air

Concealed ducts conveying moisture laden air shall be fabricated from minimum [1.3 mm (18 gauge), Type 300 series, stainless steel] [1.6 mm (16 gauge), galvanized steel] [0.55 mm (16 ounce), tempered copper sheet]. Joints shall be continuously welded, brazed, or soldered to be liquid tight. Duct shall be pitched to drain at points indicated. Transitions to other metals shall be liquid tight, companion angle bolted and gasketed.

3.1.17 Acoustical Duct Lining

Lining shall be applied in cut-to-size pieces attached to the interior of the duct with nonflammable fire resistant adhesive conforming to ASTM C 916, Type I, NFPA 90A, UL 723, and ASTM E 84. Top and bottom pieces shall lap the side pieces and shall be secured with welded pins, adhered clips of metal, nylon, or high impact plastic, and speed washers or welding cup-head pins installed according to SMACNA-06. Welded pins, cup-head pins, or adhered clips shall not distort the duct, burn through, nor mar the finish or the surface of the duct. Pins and washers shall be flush with the surfaces of the duct liner and all breaks and punctures of the duct liner coating shall be sealed with the nonflammable, fire resistant adhesive. Exposed edges of the liner at the duct ends and at other joints where the lining will be subject to erosion shall be coated with a heavy brush coat of the nonflammable, fire resistant adhesive, to prevent delamination of glass fibers. Duct liner may be applied to flat sheet metal prior to forming duct through the sheet metal brake. Lining at the top and bottom surfaces of the duct shall be additionally secured by welded pins or adhered clips as specified for cut-to-size pieces. Other methods indicated in SMACNA-06 to obtain proper installation of duct liners in sheet metal ducts, including adhesives and fasteners, will be acceptable.

3.1.18 Dust Control

To prevent the accumulation of dust, debris and foreign material during construction, temporary dust control protection shall be provided. The distribution system (supply and return) shall be protected with temporary seal-offs at all inlets and outlets at the end of each day's work. Temporary protection shall remain in place until system is ready for startup.

3.1.19 Insulation

Thickness and application of insulation materials for ductwork, piping, and equipment shall be according to Section 15250 THERMAL INSULATION FOR MECHANICAL SYSTEMS. Outdoor air intake ducts and plenums shall be externally insulated [up to the point where the outdoor air reaches the conditioning unit] [or] [up to the point where the outdoor air mixes with the outside air stream].

3.1.20 Duct Test Holes

Holes with closures or threaded holes with plugs shall be provided in ducts and plenums as indicated or where necessary for the use of pitot tube in balancing the air system. Extensions, complete with cap or plug, shall be provided where the ducts are insulated.

3.1.21 Power Roof Ventilator Mounting

Foamed 13 mm (1/2 inch) thick, closed-cell, flexible elastomer insulation shall cover width of roof curb mounting flange. Where wood nailers are used, holes shall be pre-drilled for fasteners.

3.1.22 Power Transmission Components Adjustment

V-belts and sheaves shall be tested for proper alignment and tension prior to operation and after 72 hours of operation at final speed. Belts on drive side shall be uniformly loaded, not bouncing. Alignment of direct driven couplings shall be to within 50 percent of manufacturer's maximum allowable range of misalignment.

3.2 FIELD PAINTING AND PIPING IDENTIFICATION

Finish painting of items only primed at the factory or surfaces not specifically noted otherwise and identification for piping are specified in Section 09900 PAINTING, GENERAL.

3.3 PIPING HYDROSTATIC TEST

After cleaning, water piping shall be hydrostatically tested at a pressure equal to 150 percent of the total system operating pressure for period of time sufficient to inspect every joint in the system and in no case less than 2 hours. Leaks shall be repaired and piping retested until test is successful. No loss of pressure will be allowed. Leaks shall be repaired by re-welding or replacing pipe or fittings. Caulking of joints will not be permitted. Concealed and insulated piping shall be tested in place before covering or concealing.

3.4 DUCTWORK LEAK TEST

Ductwork leak test shall be performed for the entire air distribution and exhaust system, including fans, coils, [filters, etc.] [filters, etc. designated as static pressure Class 750 Pa (3 inch water gauge) through Class 2500 Pa (10 inch water gauge).] Test procedure, apparatus, and report shall conform to SMACNA-10. The maximum allowable leakage rate is [_____] l/s ([_____] cfm). Ductwork leak test shall be completed with satisfactory results prior to applying insulation to ductwork exterior.

3.5 CLEANING AND ADJUSTING

Pipes shall be cleaned free of scale and thoroughly flushed of foreign matter. A temporary bypass shall be provided for water coils to prevent flushing water from passing through coils. Strainers and valves shall be thoroughly cleaned. Prior to testing and balancing, air shall be removed from water systems by operating the air vents. Temporary measures, such as piping the overflow from vents to a collecting vessel shall be taken to avoid water damage during the venting process. Air vents shall be plugged or capped after the system has been vented. Inside of [room fan-coil units] [coil-induction units,] [air terminal units,] [unit ventilators,] ducts, plenums, and casing shall be thoroughly cleaned of debris and blown free of small particles of rubbish and dust and then shall be vacuum cleaned before installing outlet faces. Equipment shall be wiped clean, with traces of oil, dust, dirt, or paint spots removed. Temporary filters shall be provided prior to startup of all fans that are operated during construction, and new filters shall be installed after all construction dirt has been removed from the building, and the ducts, plenums, casings, and other items specified have been vacuum cleaned. System shall be maintained in this clean condition until final acceptance. Bearings shall be properly lubricated with oil or grease as recommended by the manufacturer. Belts shall be tightened to proper tension. Control valves and other miscellaneous equipment requiring adjustment shall be adjusted to setting indicated or directed. Fans shall be adjusted to the speed indicated by the manufacturer to meet specified conditions.

3.6 TESTING, ADJUSTING, AND BALANCING

Testing, adjusting, and balancing shall be as specified in Section 15990 TESTING, ADJUSTING AND BALANCING OF HVAC SYSTEMS. Testing, adjusting, and balancing shall begin only when the air supply and distribution, including controls, has been completed, with the exception of performance tests.

3.7 PERFORMANCE TESTS

After testing, adjusting, and balancing has been completed as specified, each system shall be tested as a whole to see that all items perform as integral parts of the system and temperatures and conditions are evenly controlled throughout the building. Corrections and adjustments shall be made as necessary to produce the conditions indicated or specified. Capacity tests and general operating tests shall be conducted by an experienced engineer. Tests shall cover a period of not less than [_____] days for each system and shall demonstrate that the entire system is functioning according to the specifications. Coincidental chart recordings shall be made at points indicated on the drawings for the duration of the time period and shall record the temperature at space thermostats or space sensors, the humidity at space humidistats or space sensors and the ambient temperature and humidity in a shaded and weather protected area.

3.8 FIELD TRAINING

The Contractor shall conduct a training course for operating and maintenance personnel as designated by the Contracting Officer. Training shall be provided for a period of [_____] hours of normal working time and shall start after the system is functionally complete but prior to the performance tests. The field instruction shall cover all of the items contained in the approved Operating and Maintenance Instructions.

-- End of Section --

SECTION TABLE OF CONTENTS

DIVISION 15 - MECHANICAL

SECTION 15950

HEATING, VENTILATING AND AIR CONDITIONING (HVAC) CONTROL SYSTEMS

PART 1 GENERAL

1.1 REFERENCES
1.2 GENERAL REQUIREMENTS
1.2.1 Verification of Dimensions
1.2.2 Drawings
1.3 SUBMITTALS
1.4 DELIVERY AND STORAGE
1.5 OPERATION MANUAL
1.6 MAINTENANCE AND REPAIR MANUAL

PART 2 PRODUCTS

2.1 MATERIAL AND EQUIPMENT
2.2 GENERAL EQUIPMENT REQUIREMENTS
2.2.1 Electrical and Electronic Devices
2.2.2 Standard Signals
2.2.3 Ambient Temperature Limits
2.2.4 Nameplates, Lens Caps, and Tag Nameplates
2.3 MATERIALS
2.3.1 Tubing
2.3.1.1 Copper
2.3.1.2 Plastic
2.3.1.3 Stainless Steel
2.3.2 Wiring
2.3.2.1 Terminal Blocks
2.3.2.2 Control Wiring for 24-Volt Circuits
2.3.2.3 Wiring for 120-Volt Circuits
2.3.2.4 Analog Signal Wiring Circuits
2.3.2.5 Instrumentation Cable
2.3.2.6 Nonconducting Wiring Duct
2.3.2.7 Transformers
2.4 ACTUATORS
2.4.1 Valve Actuators
2.4.2 Positive Positioners
2.5 AUTOMATIC CONTROL VALVES
2.5.1 Valve Assembly
2.5.2 Butterfly-Valve Assembly
2.5.3 Two-Way Valves
2.5.4 Three-Way Valves
2.5.5 Duct-Coil and Terminal-Unit-Coil Valves
2.5.6 Valves for Chilled-Water, Condenser-Water, and Glycol Service
2.5.7 Valves for Hot-Water Service
2.5.8 Valves for Steam Service
2.5.9 Valves for High-Temperature Hot-Water Service
2.6 DAMPERS

2.6.1 Damper Assembly
2.6.1.1 Operating Links
2.6.1.2 Damper Types
2.6.2 Outside-Air, Return-Air, and Relief-Air Dampers
2.6.3 Mechanical and Electrical Space Ventilation Dampers
2.6.4 Smoke Dampers
2.6.5 Damper End Switches
2.7 DUCT SMOKE DETECTORS
2.8 INSTRUMENTATION
2.8.1 Measurements
2.8.2 Temperature Instruments
2.8.2.1 Resistance Temperature Detectors (RTD)
2.8.2.2 Continuous-Averaging RTD
2.8.2.3 RTD Transmitter
2.8.3 Relative-Humidity Instruments
2.8.4 Electronic Air-Flow-Measurement Stations and Transmitters
2.8.4.1 Stations
2.8.4.2 Transmitters
2.8.5 Pitot-Tube Air-Flow-Measurement Stations and Transmitters
2.8.5.1 Pitot-Tube Type Stations
2.8.5.2 Pitot-Tube Type Transmitters
2.8.6 Differential Pressure Instruments
2.8.7 Thermowells
2.8.8 Sunshields
2.9 THERMOSTATS
2.9.1 Nonmodulating Room Thermostats
2.9.2 Microprocessor-Based Room Thermostats
2.9.3 Modulating Room Thermostats
2.9.4 Nonmodulating Capillary Thermostats and Aquastats

-- End of Section Table of Contents --

SECTION 15950
HEATING, VENTILATING AND AIR CONDITIONING (HVAC) CONTROL SYSTEMS

PART 1 GENERAL

1.1 REFERENCES

The publications listed below form a part of this specification to the extent referenced. The publications are referred to in the text by basic designation only.

AMERICAN SOCIETY FOR TESTING AND MATERIALS (ASTM)

ASTM A 269	(1994a) Seamless and Welded Austenitic Stainless Steel Tubing for General Service
ASTM B 88	(1996) Seamless Copper Water Tube
ASTM D 635	(1991) Rate of Burning and/or Extent and Time of Burning of Self-Supporting Plastics in a Horizontal Position
ASTM D 1693	(1994) Environmental Stress-Cracking of Ethylene Plastics

AMERICAN SOCIETY OF MECHANICAL ENGINEERS (ASME)

ASME B16.34	(1988) Valves - Flanged, Threaded, and Welding End

NATIONAL ELECTRICAL MANUFACTURERS ASSOCIATION (NEMA)

NEMA 250	(1991) Enclosures for Electrical Equipment (1000 Volts Maximum)

NATIONAL FIRE PROTECTION ASSOCIATION (NFPA)

NFPA 90A	(1993) Installation of Air Conditioning and Ventilating Systems

UNDERWRITERS LABORATORIES (UL)

UL 94	(1996) Tests for Flammability of Plastic Materials for Parts in Devices and Appliances
UL 268A	(1993; Rev Apr 1994) Smoke Detectors for Duct Application
UL 508	(1993) Industrial Control Equipment
UL 555S	(1996) Leakage Rated Dampers for Use in Smoke-Control Systems

1.2 GENERAL REQUIREMENTS

1.2.1 Verification of Dimensions

The Contractor shall become familiar with all details of the work, shall verify all dimensions in the field, and shall advise the Contracting Officer of any discrepancy before performing any work.

1.2.2 Drawings

Because of the small scale of the drawings, it is not possible to indicate all offsets, fittings, and accessories that may be required. The Contractor shall investigate the mechanical, electrical, and finish conditions that could affect the work to be performed, shall arrange such work accordingly, and shall furnish all work necessary to meet such conditions.

1.3 SUBMITTALS

Government approval is required for submittals with a "GA" designation; submittals having an "FIO" designation are for information only. The following shall be submitted in accordance with Section 01330 SUBMITTAL PROCEDURES:

SD-01 Data

Equipment Compliance Booklet; [_____].

An HVAC control system equipment compliance booklet (ECB) in indexed booklet form with numbered tabs separating the information on each device. It shall consist of, but not be limited to, data sheets and catalog cuts which document compliance of all devices and components with the specifications. The ECB shall be indexed in alphabetical order by the unique identifiers. Devices and components which do not have unique identifiers shall follow the devices and components with unique identifiers and shall be indexed in alphabetical order according to their functional name. The ECB shall include a bill of materials for each HVAC control system. The bill of materials shall function as the table of contents for the ECB and shall include the device's unique identifier, device function, manufacturer, model/part/catalog number used for ordering, and tab number where the device information is located in the ECB.

SD-04 Drawings

HVAC Control System; [_____].

Drawings on A1 841 by 594 mm sheets in the form and arrangement shown. The drawings shall use the same abbreviations, symbols, nomenclature and device identifiers shown. Each control-system element on a drawing shall have a unique identifier as shown. All HVAC control system drawings shall be delivered together as a complete submittal. Drawings shall be submitted for each HVAC system.

a. HVAC control system drawings shall include the following:

Sheet One: Drawing index, HVAC control system legend.

Sheet Two: Valve schedule, damper schedule.

Sheet Three: Compressed air station schematic.

Sheet Four: HVAC control system schematic and equipment schedule.

Sheet Five: HVAC control system sequence of operation and ladder diagram.

Sheet Six: HVAC control panel arrangement, control panel cross-section, and control panel inner door layout.

Sheet Seven: HVAC control panel back-panel layout.

Sheet Eight: Control loop wiring diagrams.

Sheet Nine: Motor starter and relay wiring diagram.

Note: Repeat sheets four through nine for each AHU system.

b. An HVAC control system drawing index showing the name and number of the building, military site, State or other similar designation, and Country. The drawing index shall list all HVAC control system drawings, including the drawing number, sheet number, drawing title, and computer filename when used.

c. An HVAC control system legend showing generic symbols and the name of devices shown on the HVAC control system drawings.

d. A valve schedule showing each valve's unique identifier, size, flow coefficient (Cv), pressure drop at specified flow rate, spring range, positive positioner range, actuator size, close-off pressure data, dimensions, and access and clearance requirements data.

e. A damper schedule showing each damper and actuator's identifier, nominal and actual sizes, orientation of axis and frame, direction of blade rotation, spring ranges, operation rate, positive positioner ranges, locations of actuators and damper end switches, arrangement of sections in multi-section dampers, and methods of connecting dampers, actuators, and linkages. The damper schedule shall include the maximum leakage rate at the operating static-pressure differential. The damper schedule shall contain actuator selection data supported by calculations of the torque required to move and seal the dampers, access and clearance requirements.

f. A compressed-air station schematic diagram showing all equipment, including: compressor with motor horsepower and voltage; starter; isolators; manual bypasses; tubing sizes; drain piping and drain traps; reducing valves; dryer; and data on manufacturer's names and model numbers, mounting, access, and clearance requirements. Air compressor and air dryer data shall include calculations of the air consumption of current-to-pneumatic transducers and any other control system devices to be connected to the compressed air station, and the compressed air supply dewpoint temperature at 140 kPa (gauge).

g. An HVAC control system equipment schedule showing the control loop, device unique identifier, device function, setpoint, input range, and additional important parameters (i.e. output range).

h. An HVAC control system sequence of operation.

I. An HVAC control system ladder diagram showing all relays, contacts, pilot lights, switches, fuses and starters connected to the control system.

j. HVAC control panel arrangement drawings showing both side and front views of the panel. The drawing shall show panel and mounting dimensions.

k. HVAC control panel cross-section drawings showing mounting rails and standoffs for devices.

l. HVAC control panel inner door layout drawings showing both front and rear views of the inner door. The drawings shall show device locations, labels, nameplate legends, and fabrication details.

m. HVAC control panel back-panel layout drawings showing device locations, labels, nameplate legends, terminal block layout, fabrication details, and enclosure operating temperature-rise calculations.

n. HVAC control system wiring diagrams showing functional wiring diagrams of the interconnection of conductors and cables to HVAC control panel terminal blocks and to the identified terminals of devices, starters and package equipment. The wiring diagrams shall show all necessary jumpers and ground connections. The wiring diagrams shall show the labels of all conductors. Sources of power required for HVAC control systems and for packaged-equipment control systems shall be identified back to the panel-board circuit breaker number, HVAC system control panel, magnetic starter, or packaged equipment control circuit. Each power supply and transformer not integral to a controller, starter, or packaged equipment shall be shown. The connected volt-ampere load and the power supply volt-ampere rating shall be shown.

SD-08 Statements

Commissioning Procedures; [_____] .

a. [Six] [_____] copies of the HVAC control system commissioning procedures, in indexed booklet form, 60 days prior to the scheduled start of commissioning. Commissioning procedures shall be provided for each HVAC control system, and for each type of terminal-unit control system. The commissioning procedures shall reflect the format and language of this specification, and refer to devices by their unique identifiers as shown. The commissioning procedures shall be specific for each HVAC system, and shall give detailed step-by-step procedures for commissioning of the system.

b. Commissioning procedures documenting detailed, product-specific set-up procedures, configuration procedures, adjustment procedures, and calibration procedures for each device. Where the detailed product-specific commissioning procedures are included in manufacturer supplied manuals, reference may be made in the HVAC control system commissioning procedures to the manuals.

c. Commissioning procedures documenting controller configuration checksheets for each controller listing all configuration parameters, dip switch and jumper settings, and initial recommended P, I and D values. The configuration parameters shall be listed in the order in which they appear during the configuration process. Each configuration parameter shall be noted as being: set per specs with no field adjustment required, set per specs but field adjustable, or not applicable.

d. Commissioning procedures showing a time clock configuration checksheet listing all parameters, and switch settings. The parameters shall be listed in the order which they appear during the setup process.

e. An HVAC control system commissioning procedures equipment list that lists the equipment to be used to accomplish commissioning. The list shall include manufacturer name, model number, equipment function, the date of the latest calibration, and the results of the latest calibration.

Performance Verification Test Procedures; [_____].

[Six] [_____] copies of the HVAC control system performance verification test procedures, in indexed booklet form, 60 days before the Contractor's scheduled test dates. The performance verification test procedures shall refer to the devices by their unique identifiers as shown, shall explain, step-by-step, the actions and expected results that will demonstrate that the HVAC control system performs in accordance with the sequences of operation. An HVAC control system performance verification test equipment list shall be included that lists the equipment to be used during performance verification testing. The list shall include manufacturer name, model number, equipment function, the date of the latest calibration, and the results of the latest calibration.

Training Course Materials; [_____].

[Six] [_____] copies of HVAC control system training course material 30 days prior to the scheduled start of the training course. The training course material shall include the operation manual, maintenance and repair manual, and paper copies of overheads used in the course. An HVAC control system training course, in outline form, with a proposed time schedule. Approval of the planned training schedule shall be obtained from the Government at least [60] [_____] days prior to the start of the training.

SD-09 Reports

Commissioning Report; [_____].

[Six] [_____] copies of the HVAC control system commissioning report, in indexed booklet form, within 30 days after completion of the system commissioning. The commissioning report shall include data collected during the HVAC control system commissioning and shall follow the format of the commissioning procedures. The commissioning report shall include all controller and time clock checksheets with final values listed for all parameters, setpoints, P, I, D setting constants, calibration data for all devices, and results of adjustments.

Performance Verification Test Report; [_____].

[Six] [_____] copies of the HVAC control system performance verification test report, in indexed booklet form, within 30 days after completion of the test. The HVAC control system performance verification test report shall include data collected during the HVAC control system performance verification test. The original copies of data gathered during the performance verification test shall be turned over to the Government after Government approval of the test results.

SD-13 Certificates

ASME Air-Storage Tank Certificate; [_____].

An ASME Air-Storage Tank Certificate for each storage tank.

SD-18 Records

Service Organizations; [_____].

[Six] [_____] copies of a list of service organizations qualified to service the HVAC control system. The list shall include the service organization name, address, technical point of contact and telephone number, and contractual point of contact and telephone number.

SD-19 Operation and Maintenance Manuals

Operation Manual; [_____].

Maintenance and Repair Manual; [_____].

[Six] [_____] copies of the [HVAC control system operation manual] [and] [HVAC control system maintenance and repair manual] for each HVAC control system 30 days before the date scheduled for the training course.

1.4 DELIVERY AND STORAGE

Products shall be stored with protection from the weather, humidity and temperature variations, dirt and dust, and other contaminants, within the storage-condition limits published by the equipment manufacturer. Dampers shall be stored so that seal integrity, blade alignment and frame alignment are maintained.

1.5 OPERATION MANUAL

An HVAC control system operation manual for each HVAC control system, in indexed booklet form, shall be provided. The operation manual shall include the HVAC control system sequence of operation, and procedures for the HVAC system start-up, operation and shut-down. The operation manual shall include as-built HVAC control system detail drawings. The operation manual shall include the as-built controller configuration checksheets, the as-built time clock configuration checksheet, the HVAC control system front panel description, the procedures for changing HVAC system controller setpoints, the procedures for gaining manual control of processes, the time clock manufacturer's manual control of processes, the time clock manufacturer's operation manual, and the controller manufacturer's operation manual.

a. The HVAC control system front panel description shall explain the meaning and use of the lights, switches, gauges, and controller displays located in the front panel. Each light, switch, gauge,

and display described shall be numbered and referenced to a drawing of the front panel.

b. The procedures for changing HVAC system controller setpoints shall describe the step-by-step procedures required to change: the process variable setpoints of controllers, the alarm setpoints of controllers, the controller bias settings, and controller setpoint reset schedules.

c. The procedures for gaining manual control of processes shall describe step-by-step procedures required to gain manual control of devices and manually adjust their positions.

1.6 MAINTENANCE AND REPAIR MANUAL

An HVAC control system maintenance and repair manual for each HVAC control system, in indexed booklet form in hardback binders, shall be provided. The maintenance and repair manual shall include the routine maintenance checklist, a recommended repair methods list, a list of recommended maintenance and repair tools, the qualified service organization list, the as-built commissioning procedures and report, the as-built performance verification test procedures and report, and the as-built equipment data booklet (EDB).

a. The routine maintenance checklist shall be arranged in a columnar format. The first column shall list all devices listed in the equipment compliance booklet (ECB), the second column shall state the maintenance activity or state no maintenance required, the third column shall state the frequency of the maintenance activity, and the fourth column for additional comments or reference.

b. The recommended repair methods list shall be arranged in a columnar format and shall list all devices in the equipment compliance booklet (ECB) and state the guidance on recommended repair methods, either field repair, factory repair, or whole-item replacement.

c. The as-built equipment data booklet (EDB) shall include the equipment compliance booklet (ECB) and all manufacturer supplied user manuals and information.

d. If the operation manual and the maintenance and repair manual are provided in a common volume, they shall be clearly differentiated and separately indexed.

PART 2 PRODUCTS

2.1 MATERIAL AND EQUIPMENT

Material and equipment shall be standard products of a manufacturer regularly engaged in the manufacturing of such products which are of a similar material, design and workmanship. The standard products shall have been in satisfactory commercial or industrial use for 2 years prior to bid opening. The 2-year use shall include applications of equipment and materials under similar circumstances and of similar size. The 2 years experience must be satisfactorily completed by a product which has been sold or is offered for sale on the commercial market through advertisements, manufacturers' catalogs, or brochures. Products having

less than a 2-year field service record will be acceptable if a certified record of satisfactory field operation, for not less than 6000 hours exclusive of the manufacturer's factory tests, can be shown. The equipment items shall be supported by a service organization. The Contractor shall submit a certified list of qualified permanent service organizations and qualifications. These service organizations shall be reasonably convenient to the equipment on a regular and emergency basis during the warranty period.

2.2 GENERAL EQUIPMENT REQUIREMENTS

2.2.1 Electrical and Electronic Devices

All electrical, electronic, and electro-pneumatic devices not located within an HVAC control panel shall have a NEMA Type 1 enclosure in accordance with NEMA 250 unless otherwise shown.

2.2.2 Standard Signals

The output of all analog transmitters and the analog input and output of all single-loop controllers and function modules shall be 4-to-20 mAdc signals. The signal shall originate from current-sourcing devices and shall be received by current-sinking devices.

2.2.3 Ambient Temperature Limits

Ambient Temperature Actuators and positive positioners, and transmitters shall operate within temperature limit ratings of 5 to 60 degrees C. All panel-mounted instruments shall operate within limit ratings of 2 to 50 degrees C and 10 percent to 95 percent relative humidity, noncondensing. All devices installed outdoors shall operate within limit ratings of minus 40 to plus 65 degrees C.

2.2.4 Nameplates, Lens Caps, and Tag Nameplates

Nameplates, lens caps, and lens caps bearing legends as shown and tags bearing device-unique identifiers as shown shall have engraved or stamped characters. A plastic or metal tag shall be mechanically attached directly to each device or attached by a metal chain or wire. Each air flow measurement station shall have a tag showing flow rate range for signal output range, duct size, and identifier as shown.

2.3 MATERIALS

2.3.1 Tubing

2.3.1.1 Copper

Copper tubing shall conform to ASTM B 88 and shall have sweat fittings and valves.

2.3.1.2 Plastic

Plastic tubing shall have barbed fittings and valves. Plastic tubing shall have the burning characteristics of linear low-density polyethylene tubing, shall be self-extinguishing when tested in accordance with ASTM D 635, shall have UL 94 V-2 flammability classification, and shall withstand stress cracking when tested in accordance with ASTM D 1693. Plastic-tubing bundles shall be provided with Mylar barrier and flame-retardant

polyethylene jacket.

2.3.1.3 Stainless Steel

Stainless steel tubing shall conform to ASTM A 269, and shall have stainless steel compression fittings.

2.3.2 Wiring

2.3.2.1 Terminal Blocks

Terminal blocks shall be insulated, modular, feed-through, clamp style with recessed captive screw-type clamping mechanism, shall be suitable for rail mounting, and shall have end plates and partition plates for separation or shall have enclosed sides.

2.3.2.2 Control Wiring for 24-Volt Circuits

Control wiring for 24-volt circuits shall be 18 AWG minimum, stranded copper and shall be rated for 300-volt service.

2.3.2.3 Wiring for 120-Volt Circuits

Wiring for 120-volt circuits shall be 18 AWG minimum, stranded copper and shall be rated for 600-volt service.

2.3.2.4 Analog Signal Wiring Circuits

Analog signal wiring circuits within control panels shall not be less than 20 AWG and shall be rated for 300-volt service.

2.3.2.5 Instrumentation Cable

Instrumentation cable shall be 18 AWG, stranded copper, single or multiple-twisted, minimum 51 mm lay of twist, 100 percent shielded pairs, and shall have a 300-volt insulation. Each pair shall have a 20 AWG tinned-copper drain wire and individual overall pair insulation. Cables shall have an overall aluminum-polyester or tinned-copper cable-shield tape, overall 20 AWG tinned-copper cable drain wire, and overall cable insulation.

2.3.2.6 Nonconducting Wiring Duct

Nonconducting wiring duct in control panels shall have wiring duct in control panels shall have slotted sides, snap-on duct covers, have slotted sides, snap-on duct covers, fittings for connecting ducts, mounting clips for securing ducts, and wire-retaining clips.

2.3.2.7 Transformers

Step-down transformers shall be utilized where control equipment operates at lower than line circuit voltage. Transformers, other than transformers in bridge circuits, shall have primaries wound for the voltage available and secondaries wound for the correct control circuit voltage. Transformers shall be sized so that the connected load is 80 percent of the rated capacity or less. Transformers shall conform to UL 508.

2.4 ACTUATORS

Actuators shall be pneumatic, electric or electronic as shown and shall be provided with mounting and connecting hardware. Actuators shall fail to their spring-return positions on signal or power failure [,except that variable air volume (VAV) terminal unit actuators may be of the floating type]. The actuator stroke shall be limited in the direction of power stroke by an adjustable stop. Actuators shall have a visible position indicator. Actuators shall smoothly open or close the devices to which they are applied and shall have a full stroke response time of 60 seconds or less. Electric or electronic actuators operating in series shall have an auxiliary actuator driver. Pneumatic actuators shall be rated for 172 kPa operating pressure except for high-pressure cylinder-type actuators. Electric actuators shall have an oil-immersed gear train. Electric actuators used in a sequencing application shall have zero and span adjustments.

2.4.1 Valve Actuators

Valve actuators shall be selected to provide a minimum of 125 percent of the motive power necessary to operate the valve over its full range of operation.

2.4.2 Positive Positioners

Positive positioners are required for pneumatic actuators. Each positive positioner shall be a pneumatic relay with a mechanical feedback mechanism and an adjustable operating range and starting point.

2.5 AUTOMATIC CONTROL VALVES

2.5.1 Valve Assembly

Valves shall have stainless-steel stems and stuffing boxes with extended necks to clear the piping insulation. Unless otherwise stated, valves shall have globe style bodies. Valve bodies shall be designed for not less than 862 kPa working pressure or 150 percent of the system operating pressure, whichever is greater. Valve leakage rating shall be 0.01 percent of rated Cv.

2.5.2 Butterfly-Valve Assembly

Butterfly valves shall be threaded lug type suitable for dead-end service, and for modulation to the fully-closed position, with carbon-steel bodies and noncorrosive discs, stainless steel shafts supported by bearings, and EPDM seats suitable for temperatures from minus 29 to plus 120 degrees C. Valves shall have a manual means of operation independent of the actuator. The rated Cv for butterfly valves shall be the valve Cv at 70% open (60 degrees open).

2.5.3 Two-Way Valves

Two-way modulating valves shall have equal-percentage characteristics.

2.5.4 Three-Way Valves

Three-way valves shall provide linear flow control with constant total flow throughout full plug travel.

2.5.5 Duct-Coil and Terminal-Unit-Coil Valves

Control valves with either flare-type or solder-type ends shall be provided for duct or terminal-unit coils. Flare nuts shall be furnished for each flare-type end valve.

2.5.6 Valves for Chilled-Water, Condenser-Water, and Glycol Service

Bodies for valves 40 mm (1-1/2 inches) and smaller shall be brass or bronze, with threaded or union ends. Bodies for valves from 50 to 80 mm (2 to 3 inches) inclusive shall be of brass, bronze or iron. Bodies for 50 mm (2 inch) valves shall have threaded ends. Bodies for valves from 65 to 80 mm (2-1/2 to 3 inches) shall have flanged-end connections. Valve Cv shall be within 100 percent to 125 percent of the Cv shown. Internal valve trim shall be brass or bronze except that valve stems may be type 316 stainless steel. Valves 100 mm (4 inches) and larger shall be butterfly valves.

2.5.7 Valves for Hot-Water Service

Valves for hot-water service below 121 degrees C shall be as follows: Bodies for valves 40 mm (1-1/2 inches) and smaller shall be brass or bronze, with threaded or union ends. Bodies for 50 mm (2 inches) valves shall have threaded ends. Bodies for valves from 50 to 80 mm (2 to 3 inches) inclusive shall be of brass, bronze, or iron. Bodies for valves 100 mm (4 inches) and larger shall be iron. Bodies for valves 65 mm (2-1/2 inches) and larger shall be provided with flanged-end connections. Valve Cv shall be within 100 percent to 125 percent of the Cv shown. Internal trim (including seats, seat rings, modulating plugs, and springs) of valves controlling water hotter than 99 degrees C shall be Type 316 stainless steel. Internal trim for valves controlling water 99 degrees C or less shall be brass or bronze. Nonmetallic parts of hot-water control valves shall be suitable for a minimum continuous operating temperature of 121 degrees C or 10 degrees C above the system design temperature, whichever is higher. Valves 100 mm (4 inches) is higher. Valves 100 mm (4 inches) and larger shall be butterfly valves.

2.5.8 Valves for Steam Service

Bodies for valves 40 mm (1-1/2 inches) and smaller shall be all brass or bronze, with threaded or union ends. Bodies for valves from 50 to 80 mm (2 to 3 inches) inclusive shall be of brass, bronze, or iron. Bodies for valves 100 mm (4 inches) and larger shall be iron. Bodies for 50 mm (2 inches) valves shall have threaded ends. Bodies for valves 65 mm (2-1/2 inches) and larger shall be provided with flanged-end connections. Valve Cv shall be not less than shown nor greater than the Cv of the manufacturer's next larger size. Internal valve trim shall be Type 316 stainless steel.

2.5.9 Valves for High-Temperature Hot-Water Service

Valves for high-temperature hot-water service above 121 degrees C shall be as follows: Valve bodies shall be rated Class 300, in accordance with ASME B16.34. Valve and actuator combination shall be normally closed. Bodies shall be carbon steel, globe type with welded ends on valves 25 mm (1 inch) and larger. Valves smaller than 25 mm (1 inch) shall have socket-weld ends. Packing shall be virgin polytetrafluoroethylene (PTFE). Valve Cv shall be within 100 percent to 125 percent of the Cv shown. Internal valve trim shall be Type 316 stainless steel.

2.6 DAMPERS

2.6.1 Damper Assembly

A single damper section shall have blades no longer than 1.2 m and shall be no higher than 1.8 m. Maximum damper blade width shall be 203 mm. Larger sizes shall be made from a combination of sections. Dampers shall be steel, or other materials where shown. Flat blades shall be made rigid by folding the edges. All blade-operating linkages shall be within the frame so that blade-connecting devices within the same damper section will not be located directly in the air stream. Damper axles shall be 13 mm (0.5 inch) (minimum) plated steel rods supported in the damper frame by stainless steel or bronze bearings. Blades mounted vertically shall be supported by thrust bearings. Pressure drop through dampers shall not exceed 10 Pa at 5 m/s in the wide-open position. Frames shall not be less than 50 mm in width. Dampers shall be tested in accordance with AMCA 500.

2.6.1.1 Operating Links

Operating links external to dampers (such as crankarms, connecting rods, and line shafting for transmitting motion from damper actuators to dampers) shall withstand a load equal to at least twice the maximum required damper-operating force. Rod lengths shall be adjustable. Links shall be brass, bronze, zinc-coated steel, or stainless steel. Working parts of joints and clevises shall be brass, bronze, or stainless steel. Adjustments of crankarms shall control the open and closed positions of dampers.

2.6.1.2 Damper Types

Dampers shall be parallel blade type.

2.6.2 Outside-Air, Return-Air, and Relief-Air Dampers

The dampers shall be provided where shown. Blades shall have interlocking edges and shall be provided with compressible seals at points of contact. The channel frames of the dampers shall be provided with jamb seals to minimize air leakage. Dampers shall not leak in excess of 102 L/s per square meter at 1,000 Pa (gauge) static pressure when closed. Seals shall be suitable for an operating temperature range of minus 40 to plus 93 degrees C. Dampers shall be rated at not less than 10 m/s air velocity.

2.6.3 Mechanical and Electrical Space Ventilation Dampers

The dampers shall be as shown. Dampers shall not leak in excess of 406 L/s per square meter at 1,000 Pa (gauge) static pressure when closed. Dampers shall be rated at not less than 7.8 m/s air velocity.

2.6.4 Smoke Dampers

Smoke-damper and actuator assembly required per NFPA 90A shall meet the Class II leakage requirements of UL 555S. Dampers shall be rated at not less than 10 m/s air velocity.

2.6.5 Damper End Switches

Each end switch shall be a hermetically-sealed switch with a trip lever and over-travel mechanism. The switch enclosure shall be suitable for mounting on the duct exterior and shall permit setting the position of the trip

lever that actuates the switch. The trip lever shall be aligned with the damper blade.

2.7 DUCT SMOKE DETECTORS

Duct smoke detectors shall conform to the requirements of UL 268A. Duct smoke detectors shall have perforated sampling tubes extended into the air duct. Detector circuitry shall be mounted in a metallic enclosure exterior to the duct. Detectors shall have manual reset. Detectors shall be rated for air velocities that include air flows between [2.5 and 20 m/s] [[_____] and [_____] m/s]. Detectors shall be powered from the HVAC control panel. Detectors shall have two sets of normally open alarm contacts and two sets of normally closed alarm contacts. [Detectors shall be connected to the building fire alarm panel for alarm initiation.] A remote annunciation lamp and accessible remote reset switch shall be provided for duct detectors that are mounted eight feet or more above the finished floor and for detectors that are not readily visible. Remote lamps and switches as well as each affected fan unit shall be properly identified in etched rigid plastic placards.

2.8 INSTRUMENTATION

2.8.1 Measurements

Transmitters shall be factory calibrated to provide an output of 4 to 20 mAdc over the indicated ranges:

a. Conditioned space temperature, from 10 to 30 degrees C.

b. Duct temperature, from 5 to 60 degrees C except that return-air temperature for economizer operation shall be minus 35 to plus 55 degrees C.

c. High-temperature hot-water temperature, from 94 to 260 degrees C.

d. Chilled-water temperature, from minus 1 to plus 38 degrees C.

e. Dual-temperature water, from minus 1 to plus 116 degrees C.

f. Heating hot-water temperature, from 38 to 121 degrees C.

g. Condenser-water temperature, from minus 1 to plus 55 degrees C.

h. Outside-air temperature, from minus 35 to plus 55 degrees C.

i. Relative humidity, 0 to 100 percent for space and duct high-limit applications.

j. Differential pressure for VAV supply-duct static pressure from 0 to 500 Pa (gauge).

k. Pitot-tube air-flow measurement station and transmitter, from 0 to 25 Pa (gauge) for flow velocities of 3.5 to 6 m/s, 0 to 60 Pa (gauge) for velocities of 3.5 to 9 m/s, or 0 to 125 Pa (gauge) for velocities of 3.5 to 13 m/s.

l. Electronic air-flow measurement station and transmitter, from 0.6 to 13 m/s.

2.8.2 Temperature Instruments

2.8.2.1 Resistance Temperature Detectors (RTD)

Temperature sensors shall be 100 ohms 3- or 4-wire RTD. Each RTD shall be platinum with a tolerance of plus or minus 0.1 percent at 0 degrees C, and shall be encapsulated in epoxy, series 300 stainless steel, anodized aluminum, or copper. Each RTD shall be furnished with an RTD transmitter as specified, integrally-mounted unless otherwise shown.

2.8.2.2 Continuous-Averaging RTD

Continuous-averaging RTDs shall have a tolerance of plus or minus 0.5 degree C at the reference temperature, and shall be of sufficient length to ensure that the resistance represents an average over the cross-section in which it is installed. The sensing element shall have a bendable copper sheath. Each averaging RTD shall be furnished with an RTD transmitter as specified, to match the resistance range of the averaging RTD.

2.8.2.3 RTD Transmitter

The RTD transmitter shall accept a 3-wire 100 ohm RTD input. The transmitter shall be a 2-wire, loop-powered device. The transmitter shall produce a linear 4-to-20 mAdc output corresponding to the required temperature measurement. The output error shall not exceed 0.1 percent of the calibrated span. The transmitter shall include offset and span adjustments.

2.8.3 Relative-Humidity Instruments

A relative-humidity instrument for indoor application shall have a measurement range from 0 to 100 percent relative-humidity and be rated for operation at ambient air temperatures within the range of minus 4 to plus 55 degrees C. It shall be capable of being exposed to a condensing air stream (100 percent RH) with no adverse effect to the sensor's calibration or other harm to the instrument. The instrument shall be of the wall-mounted or duct-mounted type, as required by the application, and shall be provided with any required accessories. Instruments used in duct high-limit applications shall have a bulk polymer resistive sensing element. Duct-mounted instruments shall be provided with a duct probe designed to protect the sensing element from dust accumulation and mechanical damage. The instrument (sensing element and transmitter) shall be a 2-wire, loop-powered device and shall have an accuracy of plus or minus 3 percent of full scale within the range of 20 to 80 percent relative humidity. The instrument shall have a typical long-term stability of 1 percent or less drift per year. The transmitter shall convert the sensing element's output to a linear 4-20 mAdc output signal in proportion to the measured relative-humidity value. The transmitter shall include offset and span adjustments.

2.8.4 Electronic Air-Flow-Measurement Stations and Transmitters

2.8.4.1 Stations

Each station shall consist of an array of velocity sensing elements and an air-flow straightener. Air-flow straighteners shall be contained in a flanged sheet-metal or aluminum casing. The velocity sensing elements shall be of the RTD or thermistor type, producing a linear output. The sensing elements shall be distributed across the duct cross-section in the

quantity and pattern specified by the published installation instructions of the station manufacturer. The resistance to airflow through the air-flow measurement station shall not exceed 20.0 Pa at an air-flow of 10 m/s. Station construction shall be suitable for operation at air-flows of up to 25.3 m/s over a temperature range of 4.4 to 49 degrees C, and accuracy shall be plus or minus 3 percent over a range of 0.6 to 13 m/s. In outside-air measurement or in low-temperature air delivery applications, the station shall be certified by the manufacturer to be accurate as specified over a temperature range of minus 30 to plus 50 degrees C. In outside-air measurement applications, the air-flow straightener shall be constructed of 3.175 mm (1/8 inch) aluminum honeycomb and the depth of the straightener shall not be less than 40 mm.

2.8.4.2 Transmitters

Each transmitter shall produce a linear, temperature compensated 4-to-20 mAdc output corresponding to the required velocity measurement. The output error of the transmitter shall not exceed 0.5 percent of the calibrated measurement. Each transmitter shall have offset and span adjustments.

2.8.5 Pitot-Tube Air-Flow-Measurement Stations and Transmitters

2.8.5.1 Pitot-Tube Type Stations

Each station shall contain an array of velocity sensing elements and straightening vanes inside a flanged sheet-metal casing. The velocity sensing elements shall be of the multiple pitot-tube type with averaging manifolds. The sensing elements shall be distributed across the duct cross-section in the quantity and pattern specified by the published installation instructions of the station manufacturer. The resistance to air flow through the air-flow-measurement station shall not exceed 20 Pa at an air flow of 10 m/s. Station construction shall be suitable for operation at air flows of up to 25.3 m/s over a temperature range of 4.4 to 49 degrees C, and accuracy shall be plus or minus 3 percent over a range of 3.5 to 13 m/s. This device will not be used if the required velocity measurement is below 3.5 m/s or for outside air flow measurements.

2.8.5.2 Pitot-Tube Type Transmitters

Each transmitter shall produce a linear 4-to-20 mAdc output corresponding to the required velocity pressure measurement. Each transmitter shall have a low-range differential-pressure sensing element and a square-root extractor. Sensing element accuracy shall be plus or minus 1 percent of full scale, and overall transmitter accuracy shall be plus or minus 0.25 percent of the calibrated measurement. Each transmitter shall have offset and span adjustments.

2.8.6 Differential Pressure Instruments

The instrument shall be a pressure transmitter with an integral sensing element. The instrument over pressure rating shall be 300 percent of the operating pressure. The sensor/transmitter assembly accuracy shall be plus or minus 2 percent of full scale. The transmitter shall be a 2-wire, loop-powered device. The transmitter shall produce a linear 4-to-20 mAdc output corresponding to the required pressure measurement. Each transmitter shall have offset and span adjustments.

2.8.7 Thermowells

Thermowells shall be Series 300 stainless steel with threaded brass plug and chain, 50 mm lagging neck and extension-type well, and inside diameter and insertion length as required for the application.

2.8.8 Sunshields

Sunshields for outside-air temperature sensing elements shall prevent the sun from directly striking the temperature sensing elements. The sunshields shall be provided with adequate ventilation so that the sensing element responds to the ambient temperature of the surroundings. The top of each sunshield shall have a galvanized-metal rainshield projecting over the face of the sunshield. The sunshields shall be painted white or shall be unpainted aluminum.

2.9 THERMOSTATS

Thermostat ranges shall be selected so that the setpoint is adjustable [without tools] between plus or minus 5 degrees C of the setpoint shown. Thermostats shall be electronic or electric.

2.9.1 Nonmodulating Room Thermostats

Contacts shall be single-pole double-throw (SPDT), hermetically sealed, and wired to identified terminals. Maximum differential shall be 2.75 degrees C. Room thermostats shall be enclosed with separate locking covers (guards). Thermostats shall have manual switches as required by the application.

2.9.2 Microprocessor-Based Room Thermostats

Microprocessor-based thermostats shall have built-in keypads for scheduling of day and night temperature settings. [Access to the scheduling mode shall be by a password control code.] When out of the scheduling mode, thermostats shall have continuous display of time, with AM and PM indicator, continuous display of day of week, and either continuous display of room temperature with display of temperature setpoint on demand, or continuous display of temperature setpoint with display of room temperature on demand. In the programmable mode, the display shall be used for interrogating time program ON-OFF setpoints for all 7 days of the week. The time program shall allow 2 separate temperature-setback intervals per day. The thermostats shall have a means for temporary and manual override of the program schedule, with automatic program restoration on the following day. Thermostats shall have a replaceable battery to maintain the timing and maintain the schedule in memory for 1 year in the event of a power outage. Maximum differential shall be 1 degree C. When used for heat-pump applications, the thermostat shall have an emergency heat switch.

2.9.3 Modulating Room Thermostats

Modulating room thermostats shall have either one output signal, two output signals operating in unison, or two output signals operating in sequence, as required for the application. Each thermostat shall have an adjustable throttling range of 2 to 4 degrees C for each output. Room thermostats shall be enclosed with separate locking covers (guards).

2.9.4 Nonmodulating Capillary Thermostats and Aquastats

Each thermostat shall have a capillary length of at least 1.5 meters,5 feet, shall have adjustable direct-reading scales for both setpoint and

differential, and shall have a differential adjustable from 3 to 9 degrees C. Aquastats shall be of the strap-on type, with 5 degrees C fixed differential.

2.9.5 Low-Temperature-Protection Thermostats

Low-temperature-protection thermostats shall be, low-temperature safety thermostats, with NO and NC contacts [and manual reset], with an element length of 6 meters, which shall respond to the coldest 460 mm segment.

2.9.6 Modulating Capillary Thermostats

Each thermostat shall have either one output signal, two output signals operating in unison, or two output signals operating in sequence, as required for the application. Thermostats shall have adjustable throttling ranges of 2 to 4 degrees C for each output.

2.9.7 Fan-Coil Unit Room Thermostats

Fan-coil unit room thermostats in personnel living spaces shall be of the low-voltage type with locking covers. Electrical rating shall not exceed 2.5 amperes at 30 volts ac. Housing shall be corrosion resistant metal or molded plastic. Transformer and fan relay shall be provided for the proper operation of each thermostatic control system as necessary to suit the design of the control system using the thermostats specified below. Either separate heating thermostats and separate cooling thermostats or dual element heating-cooling thermostats may be provided. Motor speed switches shall be provided for 3-speed fan control.

2.9.7.1 Heating Thermostats

Fan-coil heating thermostats shall be provided with fixed heat anticipation and shall have a single-pole, single-throw (SPST) switch hermetically sealed and actuated by a bimetallic or bellows type element. Thermostats shall be provided with external temperature setting devices with a factory set maximum of [22] [20] degrees C. Heating thermostats shall have an adjustable range of at least 7 degrees below [22] [20] degrees C.

2.9.7.2 Cooling Thermostats

Fan-coil cooling thermostats shall be provided with fixed cooling anticipation heater and shall have a single-pole, single-throw (SPST) switch hermetically sealed and actuated by a bimetallic or bellows type element. Thermostats shall be provided with external temperature setting devices with a factory set minimum of 25 degrees C. Cooling thermostats shall have an adjustable range of at least 4 degrees C above 25 degrees C.

2.9.7.3 Dual Element Thermostats

Fan-coil unit combination heating-cooling thermostats shall be provided with separate temperature sensing elements for each system, and shall have a single-pole, single-throw (SPST) switch hermetically sealed and actuated by a bimetallic or bellows type element. Each element shall operate switches to provide single stage control for heating and cooling. Heating and cooling circuits shall be electrically isolated from each other. Scales and ranges shall be as specified for individual thermostats. Thermostats shall contain, or a subbase shall be provided which contains, selector switches for Heat-Off-Cool. A changeover controller providing automatic summer-winter changeover for thermostats by sensing the supplied

fluid temperature shall be provided. A limited range heating-cooling dead band thermostat shall control cooling when temperature is above the upper setpoint and heating when temperature is below the lower setpoint and shall have a dead band, with no heating or cooling, when temperature is between the setpoints. Setpoint adjustment shall be concealed.

2.10 PRESSURE SWITCHES AND SOLENOID VALVES

2.10.1 Pressure Switches

Each switch shall have an adjustable setpoint with visible setpoint scale. Range shall be as shown. Differential adjustment shall span 20 to 40 percent of the range of the device.

2.10.2 Differential-Pressure Switches

Each switch shall be an adjustable diaphragm-operated device with two SPDT contacts, with taps for sensing lines to be connected to duct pressure fittings designed to sense air pressure. These fittings shall be of the angled-tip type with tips pointing into the air stream. The setpoint shall not be in the upper or lower quarters of the range and the range shall not be more than three times the setpoint. Differential shall be a maximum of 35 Pa at the low end of the range and 85 Pa at the high end of the range.

2.10.3 Pneumatic Electric (PE) Switches

Each switch shall have an adjustable setpoint range of 20 to 140 kPa with a switching differential adjustable from 15 to 35 kPa. The switch action shall be SPDT.

2.10.4 Solenoid-Operated Pneumatic (EP) Valves

Each valve shall have three-port operation: common, normally open, and normally closed. Each valve shall have an outer cast-aluminum body and internal parts of brass, bronze, or stainless steel. The air connection shall be a 10 mm (3/8 inch) NPT threaded connection. Valves shall be rated for 345 kPa when used in a control system that operates at 172 kPa or less, or 1035 kPa when used in a control system that operates in the range of 172 to 690 kPa.

2.11 INDICATING DEVICES

2.11.1 Thermometers

2.11.1.1 Piping System Thermometers

Piping system thermometers shall have brass, malleable iron or aluminum alloy case and frame, clear protective face, permanently stabilized glass tube with indicating-fluid column, white face, black numbers, and a 230 mm scale. Thermometers for piping systems shall have rigid stems with straight, angular, or inclined pattern.

2.11.1.2 Piping System Thermometer Stems

Thermometer stems shall have expansion heads as required to prevent breakage at extreme temperatures. On rigid-stem thermometers, the space between bulb and stem shall be filled with a heat-transfer medium.

2.11.1.3 Non-Averaging Air-Duct Thermometers

Air-duct thermometers shall have perforated stem guards and 45-degree adjustable duct flanges with locking mechanism.

2.11.1.4 Averaging Air-Duct Thermometers

Averaging thermometers shall have a 90 mm (nominal) dial, with black legend on white background, and pointer traveling through a 270-degree arc.

2.11.1.5 Accuracy

Thermometers shall have an accuracy of plus or minus 1 percent of scale range. Thermometers shall have a range suitable for the application.

2.11.2 Pressure Gauges

Gauges shall be 50 mm (nominal) size, back connected, suitable for field or panel mounting as required, shall have black legend on white background, and shall have a pointer traveling through a 270-degree arc. Accuracy shall be plus or minus 3 percent of scale range. Gauges shall meet requirements of ASME B40.1.

2.11.2.1 Pneumatic Actuator Gauges

Field mounted gauges for indicating signal input to pneumatic actuators shall have a scale of 0 to 200 kPa with 10 kPa graduations.

2.11.2.2 Air Storage Tank, Filter, and Dryer Gauges

Gauges for air storage tanks, or for use before and after dryers or dirt and oil filters, shall have a scale of 0 to 1100 kPa with 20 kPa graduations.

2.11.2.3 Hydronic-System Gauges

Gauges for hydronic-system applications shall have ranges and graduations as shown.

2.11.2.4 Control Panel Pressure Gauges

Panel mounted air pressure gauges shall have a scale of 0 to 200 kPa with 10 kPa graduations.

2.11.3 Low Differential Pressure Gauges

Gauges for low differential-pressure measurements shall be a minimum of 90 mm (nominal) size with two sets of pressure taps, and shall have a diaphragm-actuated pointer, white dial with black figures, and pointer zero adjustment. Gauges shall have ranges and graduations as shown. Accuracy shall be plus or minus 2 percent of scale range.

2.12 SINGLE-LOOP CONTROLLERS

2.12.1 Controller Features

The controller shall be a microprocessor-based single-loop device that does not require Contractor generated software. The controller shall be mountable in a panel cutout measuring 92 by 92 mm. The controller shall have field scalable process variable, a remote setpoint analog input and an

analog output with adjustable high and low end limits and proportional control manual reset adjustment. The analog output shall result from proportional, integral and derivative (PID) control. The analog output shall be configurable as direct acting and reverse acting. The controller shall have keyboard, display, auto/manual selection for control of its analog output, remote setpoint adjustment/local setpoint adjustment selection with adjustable high-end and low-end limits, ratio and bias adjustments on remote setpoint input, operator-initiated self-tune/manual-tune selection, anti-reset wind-up feature, and 2 independent SPDT contact-closure outputs (PV alarm and deviation alarm). The controller shall be configurable to power-up in automatic with local setpoint control and in automatic with remote setpoint control. The range of hysteresis adjustment shall be not smaller than from 1 percent to 5 percent of process variable input span. The controller shall power the analog output loop to 20 milliamperes when connected to a load of 600 ohms. The controller shall be capable of retransmitting the process variable to 20 milliamperes when connected to 600 ohms. The controller shall have 5-year battery backup to store operating parameters or shall have nonvolatile memory.

2.12.2 Parameter Input and Display

Control parameters shall be entered and displayed directly, in the correct engineering units, through a series of keystrokes on a front-panel display with a 3-1/2 digit, 7-segment display, with decimal point and polarity indication. The use of this display shall allow manual interrogation of setpoint, mode constants, and values of the process variable and output.

2.12.3 Controller Electrical Requirements

Each controller shall be powered by 120 volts ac. Power consumption shall not be greater than 25 watts. Each controller shall provide electrical noise isolation between the ac power line and the process variable input, remote setpoint input, and output signals and of not less than 100 db at 60 Hz common-mode rejection ratio, and not less than 60 db at 60 Hz normal-mode rejection ratio.

2.12.4 Controller Accuracy

The controller shall have an accuracy of plus or minus 0.30 percent of input span, plus or minus 1 digit.

2.12.5 Self-Tuning

The controller self-tuning operation shall apply proportional, integral, and derivative modes of control and shall modify the mode constants as required. Self-tuning shall only be in operation when selected from the front panel.

2.12.6 Manual-Tuning

The controller manual-tuning operation shall provide proportional, integral, and derivative control modes, or any combination thereof, by means of individual mode constant adjustments. These adjustments shall be set for the appropriate value if a particular control mode action is desired, or to zero if that particular mode is not desired. The proportional-mode constant shall be adjustable from 0 to 200 percent of input signal range, the integral-mode constant shall be adjustable from 0 to 20 repeats per minute, and derivative-mode constant shall be adjustable

from 0 to 5 minutes.

2.13 CONTROL DEVICES AND ACCESSORIES

Control device and accessory input impedance shall not exceed 250 ohms.

2.13.1 Function Modules

Function modules shall accept mAdc analog input signals to produce mAdc analog output signals or contact output signals. Modules shall have zero and span adjustments for analog outputs, and setpoint adjustments for contact outputs. Module output span accuracy shall be plus or minus 1 percent of input span. Modules shall be rail-mounted as shown. Power consumption shall be not greater than 5 watts.

2.13.1.1 Minimum-Position Switch and Temperature-Setpoint Device

Minimum-position switch and temperature-setpoint device shall accept a 1000 ohms potentiometer input and shall produce a steady analog output. In temperature setpoint applications the potentiometer shall be single-turn, suitable for wall mounting, enclosed in a locking metal or heavy duty plastic enclosure and shall have a graduated dial corresponding to the range of the setpoint adjustment. In a minimum position switch application the potentiometer shall be mounted on or internal to the minimum position switch. The device shall have its input signal electrically or optically isolated from output. Mounting socket shall be an 8 pin base with pins 1, 2, 3 ac power input, 4, 5, 6 input signal, 7, 8, output signal.

2.13.1.2 Signal-Inverter Modules

Signal inverter shall accept an analog input signal and shall have sufficient output capacity to drive the output signal through a circuit with an impedance of not less than 600 ohms. The output shall be electrically isolated from the input and the device shall have a moisture resistant coating. Mounting socket shall be an 8 pin base with pins 1, 2, 3 ac power input, 4, 5, 6 input signal, 7, 8, output signal.

2.13.1.3 High-Low Signal Selector

High-low signal-selector modules shall accept analog input signals and select either the highest or the lowest input signal as the output signal. The signal selector shall be powered by 120 Vac and the output signal shall be electrically isolated from the input signal.

2.13.1.4 Sequencer Modules (Dual Limit Alarm)

Sequencer modules (dual limit alarms) shall accept an analog input signal and shall provide two contact closure outputs. Each output shall have an adjustable independent contact setpoint with an adjustable switching differential range between 1 percent and 100 percent of the input span. The setpoint shall be adjustable between 0 percent and 100 percent of the input span. Setpoint and switching differential (deadband) adjustment potentiometers shall be internal, top-accessed potentiometers or screws. Sequencers shall return all contacts to their zero input signal condition when power is interrupted. The device shall have moisture resistant coating.

2.13.1.5 Loop Driver Modules

Loop driver module shall accept an analog input signal and shall have a circuit input impedance not greater than 100 ohms. The loop driver module shall have sufficient output capacity to drive the output signal through a circuit with an impedance range of not less than 1000 ohms. The output shall be electrically isolated from the input and the device shall have moisture resistant coating. Mounting socket shall be an 8 pin base with pins 1, 2, 3 ac power input, 4, 5, 6 input signal, 7, 8 output signal.

2.13.2 Relays

Relays shall be 2-pole, double-throw (2PDT) with a 10-ampere resistive rating at 120 Vac, and shall have an enclosed 120-Vac coil with 8 pin blade connectors, and a matching rail-mounted socket. Power consumption shall not be greater than 3 watts.

2.13.3 Time-Delay Relays

Time delay relays shall be 2PDT with 8 pin connectors, dust cover, and a matching rail-mounted socket. Adjustable timing range shall be 0 to 5 minutes. Power consumption shall be not greater than 3 watts.

2.13.4 Time Clocks

Each time clock shall be a 365-day programmable timing device with 4 independently timed circuits. Each clock shall have a manual scheduling keypad and an alphanumeric display of all timing parameters. Timing parameters shall include: date in Gregorian calendar for month, day and day-of-month indication; and 24-hour time-of-day display, with one-minute resolution for programming the ON and OFF times for each circuit. Each clock shall allow programming of each circuit for 12 holiday periods for either ON or OFF events for any selected duration of the 365-day program. Each clock shall have capacity for programming 4 ON events and 4 OFF events per day for each circuit. The programmed events shall be assignable to a 365-day schedule. Each clock shall have automatic Standard Time and Daylight Saving Time adjustment, by input of the appropriate dates. Each time clock shall have automatic leap year correction. Each clock shall be provided with 4-day battery backup. Power consumption shall not be greater than 10 watts.

2.13.5 Current-to-Pneumatic (IP) Transducers

The transducers shall be 2-wire current-to-pressure transmitters that convert a 4-to-20 mAdc input signal to a 21 to 103 kPa, or a 103 to 21 kPa, pneumatic output, with a conversion accuracy of plus or minus 2 percent of full scale, including linearity and hysteresis. Input impedance shall not exceed 250 ohms. Air consumption shall not be greater than 0.12 L/s.

2.13.6 Direct Current (DC) Power Supply

One DC power supply shall be used to power all transmitters connected to the control panel. The power supply shall be 24 Vdc at not less than 1.2 amperes, with a peak-to-peak ripple not to exceed 0.03 percent of output voltage. Each power supply shall have a fused input, and shall be protected from voltage surges and powerline transients. The power supply output shall be protected against overvoltage and short circuits.

2.13.7 Power Line Conditioner (PLC)

PLCs shall be furnished for each controller panel. The PLCs shall provide

both voltage regulation and noise rejection. The PLCs shall be of the ferro-resonant design, with no moving parts and no tap switching, while electrically isolating the secondary from the power line side. The PLCs shall be sized for 125 percent of the actual connected kva load. Characteristics of the PLC shall be as follows:

a. At 85 percent load, the output voltage shall not deviate by more than plus or minus 1 percent of nominal voltage when the input voltage fluctuates between minus 20 percent to plus 10 percent of nominal voltage.

b. During load changes of zero to full load, the output voltage shall not deviate by more than plus or minus 3 percent of nominal voltage. Full correction of load switching disturbances shall be accomplished within 5 cycles, and 95 percent correction shall be accomplished within 2 cycles of the onset of the disturbance.

c. Total harmonic distortion shall not exceed 3-1/2 percent at full load.

2.14 PILOT LIGHTS AND MANUAL SWITCHES

Pilot lights and switches shall be rectangular devices arranged in a horizontal matrix as shown. Momentary switches shall be non-illuminated. Interlocking switches shall have separately illuminated sections. Split legend lights shall have separately illuminated sections. Device illumination shall be by light-emitting diode or neon lamp.

2.15 HVAC SYSTEM CONTROL PANELS

2.15.1 Panel Assembly

The control panel shall be factory assembled and shipped to the job site as a single unit. The panel shall be fabricated as shown, and the devices shall be mounted as shown. Each panel shall be fabricated as a bottom-entry connection point for control-system electric power, control-system main air source, control-system wiring, pneumatic tubing, interconnection of control systems, interconnection of starters and external shutdown devices, and energy monitoring and control systems (EMCS) interface. Each panel shall have an operating temperature rise of not greater than 11 degrees C above an ambient temperature of 38 degrees C.

2.15.2 Panel Electrical Requirements

Each control panel shall be powered by nominal 120 volts ac, fused at 5 amps, terminating at the panel on terminal blocks. Instrument cases shall be grounded. Interior panel, interior door, and exterior panel enclosure shall be grounded.

2.15.3 Enclosure

The enclosure for each panel shall be a NEMA 12 single-door wall-mounted box conforming to NEMA 250, with continuous hinged and gasketed exterior door with print pocket and key lock, continuous hinged interior door, interior back panel, and ventilation louvers in back surface as shown. Inside finish shall be white enamel, and outside finish shall be gray primer over phosphatized surfaces.

2.15.4 Mounting and Labeling

Controllers, pilot lights, switches, IP's, and pressure gauge shall be mounted on the interior door as shown. Power conditioner, fuses and duplex outlet shall be mounted on the interior of the cabinet as shown. All other components housed in the panel shall be mounted on the interior back panel surface of the enclosure, behind the door on rails as shown. Controllers and gauges mounted on the front of the inner door shall be identified by a plastic or metal nameplate as shown that is mechanically attached to the panel. Function modules, relays, timeclocks, IP transducers, DC power supply, and other devices interior to the panel shall be identified by a plastic or metal nameplate that is mechanically attached to the panel. The nameplate shall have the inscription as shown. Lettering shall be cut or stamped into the nameplate to a depth of not less than 0.4 mm, and shall show a contrasting color, produced by filling with enamel or lacquer or by the use of a laminated material. Painting of lettering directly on the surface of the interior door or panel is not permitted.

2.15.5 Wiring and Tubing

2.15.5.1 Current-to-Pneumatic Transducers (IP)

Current-to-pneumatic transducers (IP) shall be piped to bulkhead fittings in the bottom of the panel with a 50 mm loop to accommodate IP replacement and shall be wired to identified terminal blocks.

2.15.5.2 PaneL Wiring

Interconnections Wiring shall be installed in wiring ducts in such a way that devices can be added or replaced without disturbing wiring that is not affected by the change. Wiring to all devices shall have a 100 mm wiring loop in the horizontal wiring duct at each wiring connection. There shall be no wiring splices within the control panel. All interconnections required for power or signals shall be made on device terminals or panel terminal blocks, with not more than two wires connected to a terminal.

2.15.5.3 Panel Terminal Blocks

Terminal blocks shall be arranged in groups as shown. Instrument signal grounds at the same ground reference level shall end at a grounding terminal for connection to a common ground point. Wiring-shield grounds at the same reference level shall end at a grounding terminal for connection to a common ground point. Grounding terminal blocks shall be identified by reference level.

2.15.5.4 Wiring Identification

All wiring connected to controllers, time clocks and function modules shall be identified by function and polarity with full word identifiers, i.e., process variable input, remote setpoint input and control output.

2.15.6 EMCS Terminal Blocks

Terminal blocks shall be provided for connections to EMCS as shown. Analog signals shall require only the removal of jumpers to interface to EMCS.

2.16 COMPRESSED-AIR STATIONS

2.16.1 Air-Compressor Assembly

The air compressor shall be a high-pressure compressing unit with electric motor. The compressor shall be equipped with a motor with totally enclosed belt guard, an operating-pressure switch, safety-relief valves, gauges, intake filter and intake silencer, and combination type magnetic starter with undervoltage protection and thermal-overload protection for each phase, and shall be supported by a steel base mounted on an air storage tank. The air compressor shall provide the compressed air required for control operation while operating not more than one-third of the time. The air storage tank shall be fabricated for a working pressure of not less than 1380 kPa, and constructed and certified in accordance with ASME BPV VIII Div 1. The tank shall be of sufficient volume so that no more than six compressor starts per hour are required with the starting pressure switch differential set at 140 kPa. The tank shall be provided with an automatic condensate drain trap with manual override feature. [A second (duplex arrangement) compressor of capacity equal to the primary compressor shall be provided, with interlocked control to provide automatic changeover upon malfunction or failure of either compressor. A manual selector switch shall be provided to index the lead compressor including the automatic changeover].

2.16.2 Compressed-Air Station Specialties

2.16.2.1 Refrigerated Dryer, Filters and, Pressure Regulator

A refrigerated dryer shall be provided in the air outlet line of the air storage tank. The dryer shall be of the size required for the full delivery capacity of the compressor. The air shall be dried at a pressure of not less than 483 kPa to a temperature not greater than 2 degrees C. The dryer shall be provided with an automatic condensate drain trap with manual override feature. The refrigerant used in the dryer shall be one of the fluorocarbon gases and have an Ozone Depletion Potential of not more than 0.05. A 5 micron prefilter and coalescing-type 0.03 micron oil removal filter with shut-off valves shall be provided in the dryer discharge. Each filter bowl shall be rated for 1034 kPa maximum working pressure. A pressure regulator, with high side and low side pressure gauges, and a safety valve shall be provided downstream of the filter. Pressure regulators of the relieving type shall not be used.

2.16.2.2 Flexible Pipe Connections

The flexible pipe connectors shall be designed for 1034 kPa and 121 degrees C service, and shall be constructed of rubber, tetrafluoroethylene resin, or braided corrosion-resistant steel, bronze, monel, or galvanized steel. The connectors shall be suitable for the service intended and may have threaded or soldered ends. The length of the connectors shall be as recommended by the manufacturer for the service intended.

2.16.2.3 Vibration-Isolation Units

The vibration-isolation units shall be standard products with published loading ratings, and shall be single rubber-in-shear, double rubber-in-shear, or spring type.

2.16.2.4 Compressed Air Piping

Control air delivered to the system shall conform to ISA S7.3. Air lines for pneumatic controls shall be seamless copper tubing or nonmetallic tubing. Copper tubing shall be hard-drawn in exposed areas and either hard-drawn or annealed in concealed areas. Only tool-made bands shall be

used. Fittings for copper tubing shall be brass or copper solder joint type except at connections to apparatus, where fittings shall be brass compression type. Nonmetallic tubing shall be compounded from polyethylene, meeting the stress crack test of ASTM D 1693. Nonmetallic individual tube polyethylene or multitube instrument tubing bundle shall be classified as flame retardant under UL 94. The polyethylene material shall be rated as self-extinguishing when tested in accordance with ASTM D 635. Air lines concealed in walls shall be hard-drawn copper tubing or nonmetallic tubing in rigid conduit. Terminal single lines shall be hard-drawn copper tubing, except when the run is less than 300 mm in length, flexible polyethylene may be used. Nonmetallic tubing will not be used for applications where the tubing could be subjected to a temperature exceeding 55 degrees C. Fittings for nonmetallic tubing shall be for instrument service and may be brass or acetal resin of the compression or barbed push-on type.

2.17 ELECTRONIC VARIABLE AIR VOLUME (VAV) TERMINAL UNIT CONTROLS

2.17.1 VAV Terminal Units

The VAV terminal units shall be as specified in Section 15895 AIR SUPPLY, DISTRIBUTION, VENTILATION, AND EXHAUST SYSTEM. [All VAV terminal box controllers associated with an AHU shall be networked together such that configuration parameters for any controller may be monitored and modified from the controller of any other terminal unit served by the same AHU.]

2.17.2 Terminal-Unit Controls

2.17.2.1 Box Control Device

Controls for pressure independent boxes [with recirculating fans] [with series fans] shall consist of a velocity-sensing device in the primary air entering the box, a room temperature sensing element[with occupant setpoint adjustment], a damper actuator, [a duct pressure switch to operate the series fan], and an adjustable microprocessor-based VAV box controller. Each controller shall operate a damper for cooling and heating [and a duct coil for heating.] [and the recirculation fan and duct coil for heating.] Terminal unit controls shall meet the requirements of UL 916 and 47 CFR 15.

2.17.2.2 Communication and Programming Device

One hand-held communication and programming device with instruction manual, plus one additional hand-held communicating device and instruction manual per 100 terminal units, shall be provided. The communication and programming device shall connect to the controller directly [or to a jack at the room-temperature-sensing element location]. The communication and programming device shall be used to read and set minimum velocity, maximum velocity, heating setpoint, and cooling setpoint, and to read velocity and space temperature.

PART 3 EXECUTION

3.1 GENERAL INSTALLATION CRITERIA

The HVAC control system shall be installed and ready for operation, as specified and shown. Dielectric isolation shall be provided where dissimilar metals are used for connection and support. Penetrations through and mounting holes in the building exterior shall be made watertight. The HVAC control system installation shall provide clearance

for control system maintenance by maintaining access space between coils, access space to mixed-air plenums, and other access space required to calibrate, remove, repair, or replace control system devices. The control system installation shall not interfere with the clearance requirements for mechanical installation shall not interfere with the clearance requirements for mechanical and electrical system maintenance.

3.1.1 Device Mounting Criteria

Devices mounted in or on piping or ductwork, on building surfaces, in mechanical/electrical spaces, or in occupied space ceilings shall be installed in accordance with manufacturer's recommendations and as shown. Control devices to be installed in piping and ductwork shall be provided with all required gaskets, flanges, thermal compounds, insulation, piping, fittings, and manual valves for shutoff, equalization, purging, and calibration. Strap-on temperature sensing elements shall not be used except as specified.

3.1.2 Wiring Criteria

Wiring external to control panels, including low-voltage wiring, shall be installed in metallic raceways. [Nonmetallic-sheathed cables or metallic-armored cables may be installed in areas permitted by NFPA 70.] Wiring shall be installed without splices between control devices and HVAC control panels. Cables and conductors shall be tagged at both ends, with the identifier shown on the shop drawings, in accordance with the requirements of Section 16415 ELECTRICAL WORK, INTERIOR. Other electrical work shall be as specified in Section 16415 ELECTRICAL WORK, INTERIOR and as shown.

3.1.2.1 Power-Line Surge Protection

Equipment connected to ac circuits shall be protected from powerline surges. Equipment protection shall meet the requirements of IEEE C62.41. Fuses shall not be used for surge protection.

3.1.2.2 Surge Protection for Transmitter and Control Wiring

HVAC system control panel equipment shall be protected against surges induced on control and transmitter wiring installed outside and as shown. The equipment protection shall be tested in the normal mode and in the common mode, using the following two waveforms:

a. A 10-microsecond by 1000-microsecond waveform with a peak voltage of 1500 volts and a peak current of 60 amperes.

b. An 8-microsecond by 20-microsecond waveform with a peak voltage of 1000 volts and a peak current of 500 amperes.

3.1.2.3 Controller Output Loop Impedance Limitation

Controller output loops shall be constructed so that total circuit impedance connected to the analog output of a single-loop controller shall not exceed 600 ohms.

3.2 CONTROL SYSTEM INSTALLATION

3.2.1 Damper Actuators

Actuators shall not be mounted in the air stream. Multiple actuators operating a common damper shall be connected to a common drive shaft. Actuators shall be installed so that their action shall seal the damper to the extent required to maintain leakage at or below the specified rate and shall move the blades smoothly.

3.2.2 Local Gauges for Actuators

Pneumatic actuators shall have an accessible and visible receiver gauge installed in the tubing lines at the actuator as shown.

3.2.3 Room-Instrument Mounting

Room instruments shall be mounted so that their sensing elements are 1.5 m above the finished floor unless otherwise shown. Temperature setpoint device shall be recess mounted.

3.2.4 Smoke Detectors

Duct smoke detectors shall be provided in supply and return air ducts in accordance with NFPA 90A.

3.2.5 Manual Emergency Fan Shutdown Switches

Manual emergency fan shutdown switches shall be provided for air distribution fans in accordance with NFPA 90A. Switches shall be the manual-reset type. Switches shall be located and mounted in an accessible manner, approximately 1.2 m above the finished floor. Switches shall be properly identified in etched rigid plastic placards.

3.2.6 Low-Temperature-Protection Thermostats

For each 1.8 square meters of coil-face area, or fraction thereof, a thermostat shall be provided to sense the temperature at the location shown. The thermostat sensing element shall be installed in a serpentine pattern.

3.2.7 Averaging-Temperature Sensing Elements

Sensing elements shall have a total-element minimum length equal to 3.3 linear meter per square meter of duct cross-sectional area.

3.2.8 Foundations and Housekeeping Pads

Foundations and housekeeping pads shall be provided for the HVAC control system air compressors.

3.2.9 Compressed-Air Stations

The air-compressor assembly shall be mounted on vibration eliminators, in accordance with ASME BPV VIII Div 1 for tank clearance. The air line shall be connected to the tank with a flexible pipe connector. Compressed-air-station specialties shall be installed with all required tubing, including condensate tubing to a floor drain.

3.2.10 Duct Static-Pressure Sensing Elements and Transmitters

The duct static-pressure sensing element and transmitter sensing point shall be located at 75% to 100% of the distance between the first and last

air terminal units.

3.2.11 Indication Devices Installed in Piping and Liquid Systems

Gauges in piping systems subject to pulsation shall have snubbers. Gauges for steam service shall have pigtail fittings with cock. Thermometers and temperature sensing elements installed in liquid systems shall be installed in thermowells.

3.2.12 Control System Tubing

The control system shall be installed so that pneumatic lines are not exposed to outside-air temperatures. Air lines shall be concealed except in mechanical rooms and other areas where other tubing and piping is exposed. All tubes and tube bundles exposed to view shall be installed neatly in lines parallel to the lines of the building. Tubing between panels and actuators in mechanical/electrical spaces shall be routed so that the lines are easily traceable. Air lines shall be tested periodically for leaks during installation. Air lines shall be purged of dirt, impurities and moisture before connecting to the control equipment. Air lines shall be number coded or color coded and keyed to the submittal drawings for future identification and servicing the control system.

3.2.12.1 Pneumatic Lines In Mechanical/Electrical Spaces

In mechanical/electrical spaces, pneumatic lines shall be plastic tubing or copper tubing. Horizontal and vertical runs of plastic tubes or soft copper tubes shall be installed in raceways dedicated to tubing. The dedicated raceways shall be supported every 1.8 m for horizontal runs and every 2.4 m for vertical runs. Tubing not installed in raceways shall be hard-drawn copper tubing with sweat fittings and valves, supported every 1.8 m for horizontal runs and every 2.4 m for vertical runs.

3.2.12.2 Pneumatic Lines External To Mechanical/Electrical Spaces

Tubing external to mechanical/electrical spaces, when run in plenum ceilings, shall be soft copper with sweat fittings, supported every 2.4 m. Tubing not in plenum spaces shall be soft copper with sweat fittings supported every 2.4 m or shall be plastic tubing in raceways dedicated to tubing.

3.2.12.3 Connection to Liquid and Steam Lines

Tubing for connection of sensing elements and transmitters to liquid and steam lines shall be [copper] [Series 300 stainless steel] with [brass compression] [stainless-steel compression] fittings.

3.2.12.4 Connection to Ductwork

Tubing for connection of sensing elements and transmitters to ductwork shall be plastic tubing.

3.2.12.5 Tubing in Concrete

Tubing in concrete shall be installed in rigid conduit. Tubing in walls containing insulation, fill, or other packing materials shall be installed in raceways dedicated to tubing.

3.2.12.6 Final Connection to Actuators

Final connections to actuators shall be plastic tubing 300 mm long and unsupported at the actuator.

3.2.12.7 Connection to HVAC Control Panel

A manual valve shall be provided at each HVAC control panel to allow shutoff of main air. Pneumatic connections to HVAC control panels shall be made at bulkhead fittings. Final connections to HVAC control panel bulkhead fitting shall be exposed tubing approximately 300 mm long.

3.3 CONTROL SEQUENCES OF OPERATION

3.3.1 System Requirements

These requirements shall apply to all primary HVAC systems unless modified herein. The sequences describe the actions of the control system for one direction of change in the HVAC process analog variable, such as temperature, humidity or pressure. The reverse sequence shall occur when the direction of change is reversed.

3.3.1.1 HVAC System Supply Fan Operating

HVAC system outside-air, return-air, and relief-air dampers shall function as described hereinafter for specific modes of operation [unless control of the dampers is assumed by the fire and smoke control system. Smoke dampers shall open before fans are allowed to start]. [Interlocked exhaust fans shall be stopped in the unoccupied and ventilation delay modes and their dampers shall be closed. Interlocked exhaust fans shall run in the occupied mode, and their dampers shall open.] Cooling-coil control valves [and cooling-coil circulating pumps] shall function as described hereinafter for the specific modes of operation [unless their control is assumed by the freeze-protection system]. Heating coil valves shall be under control.

3.3.1.2 HVAC System Supply Fan Not Operating

When an HVAC system is stopped, [interlocked fans shall stop,] [the smoke dampers shall close,] the outside-air and relief-air dampers shall close, the return-air damper shall open, all stages of direct-expansion cooling shall stop, the system shall pump down if it has a pump down cycle, humidification shall stop, and cooling-coil valves for coils located indoors shall close to the coil. Cooling-coil valves of units located outdoors shall open to the coil. Heating-coil valves shall remain under control.

3.3.1.3 HVAC System Hydronic Heating Distribution Pump Operation

Hydronic heat-exchanger valves shall be under control.

3.3.1.4 HVAC System Hydronic Heating Distribution Pump Not Operating

Hydronic heat-exchanger valves shall close.

3.3.2 Perimeter-Radiation Control Sequence

A room thermostat, located as shown, shall operate a control valve to maintain the setpoint as shown.

3.3.3 Unit-Heater and Cabinet-Unit-Heater

A wall-mounted thermostat with an "AUTO-OFF" switch located as shown, shall cycle the fan to maintain its setpoint as shown when the switch is in the "AUTO" position. When the switch is in the "OFF" position, the fan shall be stopped.

3.3.4 Gas-Fired Infrared-Heater

A microprocessor-based room thermostat with "AUTO-OFF" switch, located as shown, shall control the infrared heater. When the switch is in the "AUTO" position, the thermostat shall cycle the infrared heater to maintain the day and night setpoints as shown. Programmed occupied times shall be considered "day" and programmed unoccupied times shall be considered "night." When the switch is in the "OFF" position, the infrared heater shall be off.

3.3.5 All-Air Small Package Unitary System

A microprocessor-based room thermostat, located as shown, with "HEAT-OFF-COOL" and "AUTO-ON" switches shall control the system. When the switch is in the "HEATING" position, the cooling unit shall be off, and heating shall be active. The thermostat shall operate the condensing unit and system fan to maintain the day and night setpoints as shown. Programmed occupied times shall be considered "day" and programmed unoccupied times shall be considered "night." When the switch is in the "COOLING" position, the heating unit shall be off. The thermostat shall operate the condensing units and system fan to maintain the setpoint as shown during the day. The condensing unit shall be off at night. When the switch is in the "OFF" position, the system shall be off. When the "AUTO-ON" switch is in the "ON" position, the system fan shall run continuously. In the "AUTO" position, the system fan shall operate whenever heating or cooling is required.

3.3.6 Dual-Temperature Fan-Coil Unit

A wall-mounted thermostat, located as shown, shall cycle the fan to maintain the setpoint as shown. When the fan is on, a three-way valve shall open to the coil. When the fan is off, the three-way valve shall bypass the coil. An aquastat shall switch the wall-mounted thermostat action from heating mode to cooling mode whenever the hydronic dual-temperature medium is below the setpoint as shown.

3.3.7 Central Plant Hydronic-Heating with Steam/Hot Water Converter

a. All Modes - The outside-air temperature controller shall accept a signal at its process variable input from a sunshielded outside-air temperature sensing element and transmitter located as shown. The outside-air temperature controller process variable relay contact output shall start and stop pump [_____] at the outside-air temperatures shown. The analog output of the outside-air temperature controller shall send a signal to the remote setpoint input of the primary hydronic-heating system temperature controller to reset the hydronic-heating supply temperature setpoint in a linear schedule based on the outside-air temperature as shown. The hydronic-heating supply temperature controller shall accept a signal at its process variable input from a temperature sensing element and transmitter located in the hydronic-heating supply line and the controller output shall

modulate the converter steam control valve to maintain the reset schedule setpoint in the hydronic-heating supply line.

b. Occupied Mode - When the timeclock places the system in the occupied mode, a space-temperature sensing element and transmitter located as shown shall signal a space-temperature controller which shall maintain the setpoint as shown by modulating the secondary-hydronic-system zone valve. In this mode of operation, the controller setpoint shall be adjustable from the sensing element and transmitter location.

c. Unoccupied Mode - When the timeclock places the system in the unoccupied mode, the setpoint of the controller shall be as shown and shall be adjustable at the HVAC control panel.

3.3.8 Single Building Hydronic Heating with Hot Water Boiler

a. All Modes - The outside-air temperature controller shall accept a signal at its process variable input from a sunshielded outside-air temperature sensing element and transmitter located as shown. The outside-air temperature controller process variable relay contact output shall start and stop the distribution pump [_____] [, boiler pump [_____],] and boiler [_____] at the outside-air temperatures shown. The analog output of the outside-air temperature controller shall send a signal to the remote setpoint input of the primary hydronic-heating system temperature controller to reset the hydronic-heating supply temperature setpoint in a linear schedule based on the outside-air temperature as shown. The hydronic-heating supply temperature controller shall accept a signal at its process variable input from a temperature sensing element and transmitter located in the hydronic-heating supply line and the controller output shall modulate the hydronic-heating system control valve to maintain the reset schedule setpoint in the hydronic-heating supply line.

b. Occupied Mode - When the timeclock places the system in the occupied mode, a space-temperature sensing element and transmitter located as shown shall signal a space-temperature controller which shall maintain the setpoint as shown by modulating the secondary-hydronic-system zone valve. In this mode of operation, the controller setpoint shall be adjustable from the sensor and transmitter location.

c. Unoccupied Mode - When the timeclock places the system in the unoccupied mode, the setpoint of the controller shall be as shown and shall be adjustable at the HVAC control panel.

3.3.9 Central Plant High-Temperature Hot-Water Hydronic Heating

a. All Modes - The outside-air temperature controller shall accept a signal at its process variable input from a sunshielded outside-air temperature sensing element and transmitter located as shown. The outside-air temperature controller process variable relay contact output shall start and stop pump [_____] at the outside-air temperatures shown. The analog output of the outside-air temperature controller shall send a signal to the remote setpoint input of the primary hydronic-heating system temperature controller to reset the hydronic-heating supply temperature setpoint in a linear schedule based on the outside-air

temperature as shown. The hydronic-heating supply temperature controller shall accept a signal at its process variable input from a temperature sensing element and transmitter located in the hydronic-heating supply line and the controller output shall modulate the converter high-temperature hot-water control valve to maintain the reset schedule setpoint in the hydronic-heating supply line.

b. Occupied Mode - When the timeclock places the system in the occupied mode, a space-temperature sensing element and transmitter located as shown shall signal a space-temperature controller which shall maintain the setpoint as shown by modulating the secondary-hydronic-system zone valve. In this mode of operation, the controller setpoint shall be adjustable from the sensing element and transmitter location.

c. Unoccupied Mode - When the timeclock places the system in the unoccupied mode, the setpoint of the controller shall be as shown and shall be adjustable at the HVAC control panel.

3.3.10 Central Plant Steam Dual-Temperature Hydronic

Heating and cooling modes shall be manually selected.

a. Heating Mode - When the heating mode is selected, the system changeover valves shall close to the Central Plant chilled water flow and shall open to flow through the converter, the heating pilot light shall turn on, the cooling pilot light shall turn off, and pump [_____] shall be under control of the outside-air temperature controller. The outside-air temperature controller shall accept a signal at its process variable input from a sunshielded outside-air temperature sensing element and transmitter located as shown. The outside-air temperature controller process variable relay contact output shall start and stop pump [_____] at the outside-air temperatures shown. The analog output of the outside-air temperature controller shall send a signal to the remote setpoint input of the primary hydronic-heating system temperature controller to reset the hydronic-heating supply temperature setpoint in a linear schedule based on the outside-air temperature as shown. The hydronic-heating supply temperature controller shall accept a signal at its process variable input from a temperature-sensing element and transmitter located in the hydronic-heating supply line and the controller output shall modulate the converter steam control valve to maintain the reset schedule setpoint in the hydronic-heating supply line.

b. Cooling Mode - When the cooling mode is selected, the converter steam valve shall be closed. Pump [_____] shall continue to operate to circulate water through the system. When the system return-water temperature drops below the setpoint shown, the system-return aquastat shall allow the changeover valves to close to flow through the converter and to open to the central plant chilled-water flow, and place the control of pump [_____] under control of the system timeclock, the cooling pilot light shall turn on and the heating pilot light shall turn off. During the occupied mode, pump [_____] shall operate continuously. When the timeclock places the control system in the unoccupied mode, pump [_____] shall stop.

3.3.11 Central Plant High-Temperature Hot-Water Dual-Temperature Hydronic

Heating and cooling modes shall be manually selected.

a. Heating Mode - When the heating mode is selected, the system changeover valves shall close to the central plant chilled-water flow and shall open to flow through the converter, the heating pilot light shall turn on, the cooling pilot light shall turn off, and pump [_____] shall be under control of the outside-air temperature controller. The outside-air temperature controller shall accept a signal at its process variable input from a sunshielded outside-air temperature sensing element and transmitter located as shown. The outside-air temperature controller process variable relay contact output shall start and stop pump [_____] at the outside-air temperatures shown. The analog output of the outside-air temperature controller shall send a signal to the remote setpoint input of the primary hydronic-heating system temperature controller to reset the hydronic-heating supply temperature setpoint in a linear schedule based on the outside-air temperature as shown. The hydronic-heating supply temperature controller shall accept a signal at its process variable input from a temperature-sensing element and transmitter located in the hydronic-heating supply line and the controller output shall modulate the converter high-temperature-water control valve to maintain the reset schedule setpoint in the hydronic-heating supply line.

b. Cooling Mode - When the cooling mode is selected, the converter high-temperature-water control valve shall be closed. Pump [_____] shall continue to operate to circulate water through the system. When the system return-water temperature drops below the setpoint shown, the system-return aquastat shall allow the changeover valves to close to flow through the converter and to open to the central plant chilled-water flow, and place the control of pump [_____] under control of the system timeclock, the cooling pilot light shall turn on and the heating pilot light shall turn off. During the occupied mode, pump [_____] shall operate continuously. When the timeclock places the control system in the unoccupied mode, pump [_____] shall stop.

3.3.12 Single Building Dual-Temperature Hydronic

Heating and Cooling Modes shall be manually selected.

a. Heating Mode - When the heating mode is selected, chiller [_____] shall be stopped and the cooling pilot light shall turn off. Distribution pump [_____] shall continue to operate until the expiration of a time delay as recommended by the chiller manufacturer. At the expiration of the time delay, the system changeover valves shall close to flow through the chiller and shall open to flow through the boiler, and the distribution pump [_____] shall be under control of the outside-air temperature controller. The outside-air temperature controller shall accept a signal at its process variable input from a sunshielded outside-air temperature sensing element and transmitter located as shown. On a drop in outside-air temperature below its setpoint, the outside-air temperature controller process variable relay contact output shall start distribution pump [_____]. Starting of

distribution pump [_____] shall start boiler [_____], [and boiler pump [_____],] turn on the heating pilot light, and enable control of the hydronic-heating system control valve. The analog output of the outside-air temperature controller shall send a signal to the remote setpoint input of the primary hydronic-heating system temperature controller to reset the hydronic-heating supply temperature setpoint in a linear schedule based on the outside-air temperature as shown. The hydronic-heating supply temperature controller shall accept a signal at its process variable input from a temperature sensing element and transmitter located in the hydronic-heating supply line and the controller output shall modulate the hydronic-heating system control valve to maintain the reset schedule setpoint in the hydronic-heating supply line.

b. Cooling Mode - When the cooling mode is selected, boiler [_____] [and boiler pump [_____]] shall be stopped, the heating pilot light shall turn off, and control of the hydronic-heating system control valve shall be disabled. The distribution pump shall continue to circulate water through the system with the boiler shut off. When the system return-water temperature drops below the setpoint shown, the aquastat shall allow the changeover valves to close to flow through the boiler and to open to flow through the chiller, and place distribution pump [_____] and chiller [_____] under control of the system timeclock. During the occupied mode, distribution pump [_____] shall operate continuously, chiller [_____] shall be permitted to operate, and the cooling pilot light shall be lit. When the timeclock places the control system in the unoccupied mode, chiller [_____] shall shut down and the cooling pilot light shall turn off. Distribution pump [_____] shall continue to operate until the expiration of the time delay.

3.3.13 Heating and Ventilating Sequence

3.3.13.1 Occupied, Unoccupied, and Ventilation-Delay Operating Modes

Ventilation-delay-mode timing shall start prior to the occupied-mode timing. The timeclock shall close a contact, which shall turn on the ventilation-delay pilot light and energize a relay which shall prevent the outside-air damper from opening. At the time shown, the timeclock shall close a contact which shall turn on the occupied-mode pilot light and shall place the system in the occupied mode. At the expiration of the ventilation-delay-mode timing period, the timeclock shall open the contact to turn off the ventilation-delay-mode pilot light and de-energize a relay to allow the outside-air damper to open. At the time shown, the timeclock shall open the contact to turn off the occupied-mode pilot light and shall place the control system in the unoccupied mode of operation.

3.3.13.2 Outside-Air, Return-Air, and Relief-Air Dampers

a. Occupied Mode - The outside-air, return-air, and relief-air dampers shall be under space temperature control.

b. Unoccupied and Ventilation-Delay Modes - The dampers shall return to their normal positions.

3.3.13.3 Supply-Fan Control

a. Occupied and Ventilation-Delay Modes - Supply fan [_____] shall

start and shall operate continuously.

b. Unoccupied Mode - The supply fan shall cycle from a night-thermostat. The fan shall start at and stop at the setpoints as shown.

3.3.13.4 Filter

A differential-pressure switch across the filter shall turn on the filter pilot light when the pressure drop across the filter reaches the setpoint as shown.

3.3.13.5 Freeze Protection

All Modes - A freezestat, located as shown, shall stop the supply fan, cause the outside-air, return-air, and relief-air dampers to return to their normal position as shown; and turn on the low-temperature pilot light in the HVAC control panel if the temperature drops below the freezestat's setpoint as shown. Return to the normal mode of operation shall require manual reset at [the freezestat and at] the HVAC control panel.

3.3.13.6 Space Temperature Control

A space-temperature sensing-element and transmitter operating through a space-temperature controller shall first gradually shut off the heating-coil valve. After the heating-coil valve is fully closed, the controller shall then gradually operate the outside-air damper to admit outside air beyond the minimum quantity to maintain the setpoint as shown.

3.3.13.7 Emergency Fan Shutdown

Activation of a duct smoke detector in the supply-air or return-air ductwork, or activation of a manual emergency fan shutdown switch shall cause the associated fan to shutdown in accordance with NFPA 90A. Activation of these devices shall operate a pilot light on the HVAC control panel. The panel shall require manual resetting after the detector and the manual switch are reset.

3.3.14 Multizone Control Sequence with Return Fan

Multizone control sequence shall consist of the following:

3.3.14.1 Occupied, Unoccupied, and Ventilation-Delay Modes

Ventilation-delay-mode timing shall start prior to the occupied-mode timing. The timeclock shall close a contact, which shall turn on the ventilation-delay pilot light and energize a relay which shall prevent the outside-air damper from opening. At the time shown, the timeclock shall close a contact which shall turn on the occupied-mode pilot light and shall place the system in the occupied mode. At the expiration of the ventilation-delay-mode timing period, the timeclock shall open the contact to turn off the ventilation-delay-mode pilot light and de-energize a relay to allow the outside-air damper to open. At the time shown, the timeclock shall open the contact to turn off the occupied-mode pilot light and shall place the control system in the unoccupied mode of operation.

3.3.14.2 Outside-Air, Return-Air, and Relief-Air Dampers

a. Occupied Mode - The outside-air, return-air, and relief-air

dampers shall [be under mixed-air temperature and economizer control.] [open to their minimum position.]

b. Unoccupied and Ventilation-Delay Modes - The dampers shall return to their normal positions.

3.3.14.3 Supply-Fan and Return-Fan Control

a. Occupied and Ventilation-Delay Modes - Supply fan [_____] and return fan [_____] shall start, and shall operate continuously.

b. Unoccupied Mode - The supply fan and the return fan shall cycle from a night-thermostat. The fans shall start at and stop at the setpoints as shown.

3.3.14.4 Filter

A differential-pressure switch across the filter shall turn on the filter pilot light when the pressure drop across the filter reaches the setpoint as shown.

3.3.14.5 Hot-Deck Heating Coil

All Modes - [The outside air temperature controller shall accept a signal at its process variable input from a sunshielded outside air temperature sensing element and transmitter located as shown. The analog output of the outside air temperature controller shall send a signal to the remote setpoint input of the heating coil temperature controller to reset the hot-deck temperature setpoint in a linear schedule based on the outside air temperature.] The heating coil temperature controller shall accept a signal at its process variable input from a temperature sensing element and transmitter located in the discharge air of the coil, and the controller output shall modulate the heating coil control valve to maintain the [reset schedule] setpoint as shown.

3.3.14.6 Freeze Protection

All Modes - A freezestat, located as shown, shall stop the supply and return fans, cause the outside air, return air, and relief air dampers to return to their normal position as shown, and shall turn on the low-temperature pilot light in the HVAC control panel if the temperature drops below the freezestat's setpoint as shown. Return to the normal mode of operation shall require manual reset [at the freezestat and] at the HVAC control panel.

3.3.14.7 Cold-Deck Coil

a. Occupied and Ventilation-Delay Modes - The control valve shall be modulated by the cooling-coil temperature controller from the signal of a temperature-sensing element and transmitter located in the coil discharge air to maintain the setpoint as shown.

b. Unoccupied Mode - The cooling-coil temperature-controller output signal shall be interrupted and the cooling-coil control valve shall be closed.

3.3.14.8 Economizer Control

An economizer controller shall accept the signal of an outside-air

temperature-sensing element and transmitter at its process variable input and shall accept the signal of a return-air temperature-sensing element and transmitter at its remote setpoint input. The economizer controller shall perform switch-over between outside-air economizer control mode and minimum outside-air mode. Until the outside-air temperature rises above the setpoint as shown, the economizer controller shall hold the system in the minimum-outside-air mode and the economizer pilot light shall be off. When the outside-air temperature rises above the setpoint, the economizer controller shall place the control system in the economizer mode or in the minimum-outside-air mode as determined by a comparison of the outside-air and return-air temperatures in accordance with the differential temperature setpoints as shown. When the outside-air temperature is low with respect to the return-air temperature, the control system shall be in the economizer mode and the economizer pilot light shall be on. When the economizer controller places the control system in the minimum-outside-air mode, the outside-air damper shall be open to the setting determined by the minimum-position switch.

3.3.14.9 Mixed-Air Temperature Control

When the economizer controller places the system in the economizer mode, the mixed-air temperature controller shall modulate the dampers from the signal of a temperature-sensing element and transmitter located in the mixed-air stream to maintain the setpoint as shown.

3.3.14.10 Zone-Damper Control

All Modes - A space thermostat for each zone shall gradually operate the zone-mixing damper to heat and cool its respective zone by mixing cold-deck air and hot-deck air to maintain the setpoint as shown. On a rise in space temperature, the hot-deck damper shall gradually close, and the cold-deck damper shall gradually open.

3.3.14.11 Emergency Fan Shutdown

Activation of a duct smoke detector in the supply-air or return-air ductwork, or activation of a manual emergency fan shutdown switch shall cause the associated fan to shutdown in accordance with NFPA 90A. Activation of these devices shall operate a pilot light on the HVAC control panel. The panel shall require manual resetting after the detector and the manual switch are reset.

3.3.15 Dual-Duct Multizone Control Sequence with Return Fan

3.3.15.1 Occupied, Unoccupied, and Ventilation-Delay Modes

Ventilation-delay mode timing shall start prior to the occupied-mode timing. The timeclock shall close a contact, which shall turn on the ventilation-delay pilot light and energize a relay which shall prevent the outside air-damper from opening. At the time shown, the timeclock shall close a contact which shall turn on the occupied-mode pilot light and shall place the system in the occupied mode. At the expiration of the ventilation-delay-mode timing period, the timeclock shall open the contact to turn off the ventilation-delay-mode pilot light and de-energize a relay to allow the outside-air damper to open. At the time shown, the timeclock shall open the contact to turn off the occupied-mode pilot light and shall place the control system in the unoccupied mode of operation.

3.3.15.2 Outside-Air, Return-Air, and Relief-Air Dampers

a. Occupied Mode - The outside-air, return-air, and relief-air dampers shall [be under mixed-air temperature and economizer control.] [open to their minimum position.]

b. Unoccupied and Ventilation-Delay Modes - The dampers shall return to their normal positions.

3.3.15.3 Supply-Fan and Return-Fan Control

a. Occupied and Ventilation-Delay Modes - Supply fan [_____] and return fan [_____] shall start, and shall operate continuously.

b. Unoccupied Mode - The supply fan and the return fan shall cycle from a night-thermostat. The fans shall start and stop at the setpoints as shown.

3.3.15.4 Filter

A differential-pressure switch across the filter shall turn on the filter pilot light when the pressure drop across the filter reaches the setpoint as shown.

3.3.15.5 Hot-duct Heating Coil

All Modes - [The outside air temperature controller shall accept a signal at its process variable input from a sunshielded outside air temperature sensing element and transmitter located as shown. The analog output of the outside air temperature controller shall send a signal to the remote setpoint input of the heating coil temperature controller to reset the hot-deck temperature setpoint in a linear schedule based on the outside air temperature.] The heating coil temperature controller shall accept a signal at its process variable input from a temperature sensing element and transmitter located in the discharge air of the coil, and the controller output shall modulate the heating coil control valve to maintain the [reset schedule] setpoint as shown.

3.3.15.6 Freeze Protection

All Modes - A freezestat, located as shown, shall stop the supply and return fans, cause the outside air, return air, and relief air dampers to return to their normal position as shown, and shall turn on the low-temperature pilot light in the HVAC control panel if the temperature drops below the freezestat's setpoint as shown. Return to the normal mode of operation shall require manual reset [at the freezestat and] at the HVAC control panel.

3.3.15.7 Cold-Duct Cooling Coil

a. Occupied and Ventilation-Delay Modes - The control valve shall be modulated by the cooling-coil temperature controller from the signal of a temperature-sensing element and transmitter located in the coil discharge air to maintain the setpoint as shown.

b. Unoccupied Mode - The cooling-coil temperature controller output signal shall be interrupted, and the cooling-coil control valve shall be closed.

3.3.15.8 Economizer Control

An economizer controller shall accept the signal of an outside-air temperature-sensing element and transmitter at its process variable input and shall accept the signal of a return-air temperature-sensing element and transmitter at its remote setpoint input. The economizer controller shall perform switchover between outside-air economizer control mode and minimum outside-air mode. Until the outside-air temperature rises above the setpoint as shown, the economizer controller shall hold the system in the minimum-outside-air mode and the economizer pilot light shall be off. When the outside-air temperature rises above the setpoint, the economizer controller shall place the control system in the economizer mode or in the minimum-outside-air mode as determined by a comparison of the outside-air and return-air temperatures in accordance with the differential temperature setpoints as shown. When the outside-air temperature is low with respect to the return-air temperature, the control system shall be in the economizer mode and the economizer pilot light shall be on. When the economizer controller places the control system in the minimum-outside-air mode, the outside-air damper shall be open to the setting determined by the minimum-position switch.

3.3.15.9 Mixed-Air Temperature Control

When the economizer controller places the system in the economizer mode, the mixed-air temperature controller shall modulate the dampers from the signal of a temperature-sensing element and transmitter located in the mixed-air stream to maintain the setpoint as shown.

3.3.15.10 Dual-Duct Terminal Box

All Modes - The control dampers of the dual-duct box shall modulate in response to the signal of a space thermostat. When the space temperature decreases, the controller shall gradually close the cold-duct damper and shall gradually open the hot-duct damper to maintain the setpoint as shown.

3.3.15.11 Emergency Fan Shutdown

Activation of a duct smoke detector in the supply-air or return-air ductwork, or activation of a manual emergency fan shutdown switch shall cause the associated fan to shutdown in accordance with NFPA 90A. Activation of these devices shall operate a pilot light on the HVAC control panel. The panel shall require manual resetting after the detector and the manual switch are reset.

3.3.16 Bypass Multizone Control Sequence with Return Fan

3.3.16.1 Occupied, Unoccupied, and Ventilation-Delay Modes

Ventilation-delay-mode timing shall start prior to the occupied-mode timing. The timeclock shall close a contact which shall turn on the ventilation-delay pilot light and energize a relay which shall prevent the outside-air damper from opening. At the time shown, the timeclock shall close a contact which shall turn on the occupied-mode pilot light and shall place the system in the occupied mode. At the expiration of the ventilation-delay-mode timing period, the timeclock shall open the contact to turn off the ventilation-delay-mode pilot light and de-energize a relay to allow the outside-air damper to open. At the time shown, the timeclock shall open the contact to turn off the occupied-mode pilot light and shall place the control system in the unoccupied mode of operation.

3.3.16.2 Outside-Air, Return-Air, and Relief-air Dampers

a. Occupied Mode - The outside-air, return-air, and relief-air dampers shall be under mixed-air temperature and economizer control.

b. Unoccupied and Ventilation-Delay Modes - The dampers shall return to their normal positions.

3.3.16.3 Supply-Fan and Return-Fan Control

a. Occupied and Ventilation-Delay Modes - Supply fan [_____] and return fan [_____] shall start, and shall operate continuously.

b. Unoccupied Mode - The supply fan and the return fan shall cycle from a night-thermostat. The fans shall start at and stop at the setpoints as shown.

3.3.16.4 Filter

A differential-pressure switch across the filter shall turn on the filter pilot light when the pressure drop across the filter reaches the setpoint as shown.

3.3.16.5 Freeze Protection

All Modes - A freezestat, located as shown, shall stop the supply and return fans, cause the outside air, return air, and relief air dampers to return to their normal position as shown, and shall turn on the low-temperature pilot light in the HVAC control panel if the temperature drops below the freezestat's setpoint as shown. Return to the normal mode of operation shall require manual reset [at the freezestat and] at the HVAC control panel.

3.3.16.6 Cold-Deck Coil

a. Occupied and Ventilation-Delay Modes - The control valve shall be modulated by the cooling-coil temperature controller from the signal of a temperature-sensing element and transmitter located in the coil discharge air to maintain the setpoint as shown.

b. Unoccupied Mode - The cooling-coil temperature-controller output signal shall be interrupted and the cooling-coil control valve shall be closed.

3.3.16.7 Economizer Control

An economizer controller shall accept the signal of an outside-air temperature-sensing element and transmitter at its remote setpoint input and shall accept the signal of a return-air temperature-sensing element and transmitter at its process variable input. The economizer controller shall perform switchover between outside-air economizer control mode and minimum outside-air mode. Until the return-air temperature rises above the setpoint as shown, the economizer controller shall hold the system in the minimum-outside-air mode and the economizer pilot light shall be off. When the return-air temperature rises above the setpoint, the economizer controller shall place the control system in the economizer mode or in the minimum-outside-air mode as determined by a comparison of the outside-air and return-air temperatures in accordance with the differential temperature

setpoints as shown. When the outside-air temperature is low with respect to the return-air temperature, the control system shall be in the economizer mode and the economizer pilot light shall be on. When the economizer controller places the control system in the minimum-outside-air mode, the outside-air damper shall be open to the setting determined by the minimum-position switch.

3.3.16.8 Mixed-Air Temperature Control

When the economizer controller places the system in the economizer mode, the mixed-air temperature controller shall modulate the dampers from the signal of a temperature-sensing element and transmitter located in the mixed-air stream to maintain the setpoint as shown.

3.3.16.9 Zone Control

All Modes - A space thermostat for each zone shall gradually operate the zone-mixing damper and heating coil to heat and cool its respective zone by mixing cold-deck air and bypass-deck air to maintain the setpoint as shown. On a rise in space temperature the heating coil valve shall gradually close, and after a deadband as shown, the bypass damper shall gradually close, and the cold-deck damper shall gradually open.

3.3.16.10 Emergency Fan Shutdown

Activation of a duct smoke detector in the supply-air or return-air ductwork, or activation of a manual emergency fan shutdown switch shall cause the associated fan to shutdown in accordance with NFPA 90A. Activation of these devices shall operate a pilot light on the HVAC control panel. The panel shall require manual resetting after the detector and the manual switch are reset.

3.3.17 Variable-Air-Volume Control Sequence without Return Fan

3.3.17.1 Occupied, Unoccupied, and Ventilation-Delay Modes

Ventilation-delay mode timing shall start prior to the occupied-mode timing. The timeclock shall close a contact, which shall turn on the ventilation-delay pilot light and energize a relay which shall prevent the outside-air damper from opening. At the time shown, the timeclock shall close a contact which shall turn on the occupied-mode pilot light and shall place the system in the occupied mode. At the expiration of the ventilation-delay-mode timing period, the timeclock shall open the contact to turn off the ventilation-delay-mode pilot light and de-energize a relay to allow the outside-air damper to open. At the time shown, the timeclock shall open the contact to turn off the occupied-mode pilot light and shall place the control system in the unoccupied mode of operation.

3.3.17.2 Outside-Air, Return-Air, and Relief-Air Dampers

a. Occupied Mode - The outside-air, return-air, and relief-air dampers shall be under mixed-air temperature and economizer control.

b. Unoccupied and Ventilation-Delay Modes - The dampers shall return to their normal positions.

3.3.17.3 Supply-Fan Control

a. Occupied and Ventilation-Delay Modes - Supply fan [_____] shall start and shall operate continuously.

b. Unoccupied Mode - The supply fan shall cycle from a night-thermostat located as shown. The fan shall start at and stop at the setpoints as shown.

3.3.17.4 Supply-Duct Pressurization Control

When the supply fan starts, the duct static-pressure controller shall modulate the inlet vanes from the signal of a pressure-sensing element and transmitter to maintain the setpoint as shown. A high-limit static-pressure switch in the fan discharge shall stop the fan and turn on the high-static pilot light when the static pressure exceeds the setpoint. Restarting the supply fan and turning off the pilot light shall require manual reset at the HVAC control panel. When the fan is off, the inlet vane shall be closed.

3.3.17.5 Filter

A differential-pressure switch across the filter shall turn on the filter pilot light when the pressure drop across the filter reaches the setpoint as shown.

3.3.17.6 Freeze Protection

All Modes - A freezestat, located as shown, shall stop the supply fan, cause the outside air, return air, and relief air dampers to return to their normal position as shown, and shall turn on the low-temperature pilot light in the HVAC control panel if the temperature drops below the freezestat's setpoint as shown. Return to the normal mode of operation shall require manual reset [at the freezestat and] at the HVAC control panel.

3.3.17.7 Cooling Coil

a. Occupied and Ventilation-Delay Modes - The control valve shall be modulated by the cooling-coil temperature controller from the signal of a temperature-sensing element and transmitter located in the coil discharge air to maintain the setpoint as shown.

b. Unoccupied Mode - The cooling-coil temperature-controller output signal shall be interrupted and the cooling-coil control valve shall be closed.

3.3.17.8 Economizer Control

An economizer controller shall accept the signal of an outside-air temperature-sensing element and transmitter at its remote setpoint input and shall accept the signal of a return-air temperature-sensing element and transmitter at its process variable input. The economizer controller shall perform switchover between outside-air economizer control mode and minimum outside-air mode. Until the return-air temperature rises above the setpoint as shown, the economizer controller shall hold the system in the minimum-outside-air mode and the economizer pilot light shall be off. When the return-air temperature rises above the setpoint, the economizer controller shall place the control system in the economizer mode or in the minimum-outside-air mode as determined by a comparison of the outside-air and return-air temperatures in accordance with the differential temperature

setpoints as shown. When the outside-air temperature is low with respect to the return-air temperature, the control system shall be in the economizer mode and the economizer pilot light shall be on. When the economizer controller places the control system in the minimum-outside-air mode, the outside-air damper shall be open to the setting determined by the minimum-position switch.

3.3.17.9 Mixed-Air Temperature Control

When the economizer controller places the system in the economizer mode, the mixed-air temperature controller shall modulate the dampers from the signal of a temperature-sensing element and transmitter located in the mixed-air stream to maintain the setpoint as shown.

3.3.17.10 Pressure-Independent Terminal VAV Box

All Modes - The control damper of the VAV box shall modulate in response to the signal from a flow-sensing element at the discharge or inlet of the VAV box to a microprocessor-based VAV-box velocity controller. The velocity controller shall control the box damper from the minimum-flow position to the full-flow position from the signal of a space-temperature sensing element located as shown. When the space temperature decreases, the damper shall gradually close to the minimum-flow position to maintain the cooling setpoint as shown. When the space temperature calls for heating after the minimum-flow position is reached, control shall then pass through a temperature dead band as shown. When the space temperature has dropped through the dead band, the duct heater coil shall be gradually controlled to maintain the heating setpoint as shown.

3.3.17.11 Fan-Powered Terminal VAV Box

a. Series Fan-Powered Terminal VAV Box: All Modes - The VAV box fan shall be energized from an upstream-duct pressure switch confirming HVAC system fan operation. A space-temperature sensing element, located as shown, acting through a microprocessor-based VAV-box controller, shall modulate the supply-air control damper, mixing the supply-air and recirculating room air to provide a constant volume of air to the space to maintain the cooling set point as shown until the supply-air damper closes to minimum supply-airflow. When the space temperature calls for heat after the supply-air damper is closed to minimum flow and the VAV box is in maximum recirculation, control shall then pass through the temperature dead band as shown. When the space temperature has dropped through the temperature dead band as shown, the duct heater coil shall be gradually controlled to maintain the heating setpoint.

b. Parallel Fan-Powered Terminal VAV box: All Modes - A space-temperature sensing element, located as shown, acting through a microprocessor-based VAV-box controller, shall modulate the supply-air control damper to maintain the cooling setpoint as shown until the supply-air damper closes to minimum supply-airflow. When the space temperature calls for heat after the supply-air damper is closed to minimum flow, control shall then pass through the temperature dead-band as shown. When the space temperature has dropped through the temperature dead-band as shown, the VAV box fan shall be energized. When the space temperature has dropped through a second temperature dead-band, the duct heater coil shall be gradually controlled to maintain the

heating setpoint.

3.3.17.12 Emergency Fan Shutdown

Activation of a duct smoke detector in the supply-air or return-air ductwork, or activation of a manual emergency fan shutdown switch shall cause the associated fan to shutdown in accordance with NFPA 90A. Activation of these devices shall operate a pilot light on HVAC control panel. The panel shall require manual resetting after the detector and the manual switch are reset.

3.3.18 Variable-Air-Volume Control Sequence with Return Fan

3.3.18.1 Occupied, Unoccupied, and Ventilation-Delay Modes

Ventilation-delay-mode timing shall start prior to the occupied-mode timing. The timeclock shall close a contact, which shall turn on the ventilation-delay pilot light and energize a relay which shall prevent the outside-air damper from opening. At the time shown, the timeclock shall close a contact which shall turn on the occupied-mode pilot light and shall place the system in the occupied mode. At the expiration of the ventilation-delay-mode timing period, the timeclock shall open the contact to turn off the ventilation-delay-mode pilot light and de-energize a relay to allow the outside-air damper to open. At the time shown, the timeclock shall open the contact to turn off the occupied-mode pilot light and shall place the control system in the unoccupied mode of operation.

3.3.18.2 Outside-Air, Return-Air, and Relief-Air Dampers

a. Occupied Mode - The outside-air, return-air, and relief-air dampers shall be under mixed-air temperature and economizer control.

b. Unoccupied and Ventilation-Delay Modes - The dampers shall return to their normal positions.

3.3.18.3 Supply-Fan and Return-Fan Control

a. Occupied and Ventilation-Delay Modes - Supply fan [_____] and return fan [_____] shall start and operate continuously.

b. Unoccupied Mode - The supply fan and the return fan shall cycle from a night-thermostat. The fans shall start at and stop at the setpoint as shown.

3.3.18.4 Supply-Duct Pressurization Control

When the supply fan starts, the duct static-pressure controller shall modulate the inlet vanes from the signal of a pressure-sensing element and transmitter to maintain the setpoint as shown. A high-limit static-pressure switch in the fan discharge shall stop the supply fan and the return fan and turn on the high-static pilot light when the static pressure exceeds the setpoint. Restarting the supply fan and the return fan and turning off the pilot light shall require manual reset at the HVAC control panel. When the fan is off, the inlet vane shall be closed.

3.3.18.5 Return-Fan Volume Control

When the return fan starts, the return-fan volume controller shall modulate

the return-fan inlet vanes from the signals of an airflow measurement station and transmitter located in the return-fan inlet ductwork, in combination with an airflow measurement station and transmitter in the supply-fan outlet ductwork, to maintain a constant difference between supply-air and return-air flow rates as shown.

3.3.18.6 Filter

A differential-pressure switch across the filter shall turn on the filter pilot light when the pressure drop across the filter reaches the setpoint as shown.

3.3.18.7 Freeze Protection

All Modes - A freezestat, located as shown, shall stop the supply and return fans, cause the outside air, return air, and relief air dampers to return to their normal position as shown, and shall turn on the low-temperature pilot light in the HVAC control panel if the temperature drops below the freezestat's setpoint as shown. Return to the normal mode of operation shall require manual reset [at the freezestat and] at the HVAC control panel.

3.3.18.8 Cooling Coil

a. Occupied and Ventilation-Delay Modes - The control valve shall be modulated by the cooling-coil temperature controller from the signal of a temperature-sensing element and transmitter located in the coil discharge air to maintain the setpoint as shown.

b. Unoccupied Mode - The cooling-coil temperature-controller output signal shall be interrupted and the cooling-coil control valve shall be closed.

3.3.18.9 Economizer Control

An economizer controller shall accept the signal of an outside-air temperature-sensing element and transmitter at its remote setpoint input and shall accept the signal of a return-air temperature-sensing element and transmitter at its process variable input. The economizer controller shall perform switch-over between outside-air economizer control mode and minimum outside-air mode. Until the return-air temperature rises above the setpoint as shown, the economizer controller shall hold the system in the minimum-outside-air mode and the economizer pilot light shall be off. When the return-air temperature rises above the setpoint, the economizer controller shall place the control system in the economizer mode or in the minimum-outside-air mode as determined by a comparison of the outside-air and return-air temperatures in accordance with the differential temperature setpoints as shown. When the outside-air temperature is low with respect to the return-air temperature, the control system shall be in the economizer mode and the economizer pilot light shall be on. When the economizer controller places the control system in the minimum outside-air mode, the outside-air damper shall be open to the setting determined by the minimum-position switch.

3.3.18.10 Mixed-Air Temperature Control

When the economizer controller places the system in the economizer mode, the mixed-air temperature controller shall modulate the dampers from the signal of a temperature sensing element and transmitter located in the

mixed-air stream to maintain the setpoint as shown.

3.3.18.11 Pressure-Independent Terminal VAV Box

All Modes - The control damper of the VAV box shall modulate in response to the signal from a flow-sensing element at the discharge or inlet of the VAV box to a microprocessor-based VAV-box velocity controller. The velocity controller shall control the box damper from the minimum-flow position to the full-flow position from the signal of a space-temperature sensing element located as shown. When the space temperature decreases, the damper shall gradually close to the minimum-flow position to maintain the cooling setpoint as shown. When the space temperature calls for heating after the minimum-flow position is reached, control shall then pass through a temperature dead band as shown. When the space temperature has dropped through the dead band, the duct heater coil shall be gradually controlled to maintain the heating setpoint as shown.

3.3.18.12 Fan-Powered Terminal VAV Box

a. Series Fan-Powered Termianl VAV Box: All Modes - The VAV box fan shall be energized from an upstream-duct pressure switch confirming HVAC system fan operation. A space-temperature sensing element, located as shown, acting through a microprocessor-based VAV-box controller, shall modulate the supply-air control damper, mixing the supply-air and recirculating room air to provide a constant volume of air to the space to maintain the cooling setpoint as shown until the supply-air damper closes to minimum supply-airflow. When the space temperature calls for heat after the supply-air damper is closed to minimum flow and the VAV box is in maximum recirculation, control shall then pass through the temperature dead band as shown. When the space temperature has dropped through the temperature dead band as shown, the duct heater coil shall be gradually controlled to maintain the heating setpoint as shown.

b. Parallel Fan-Powered Terminal VAV Box: All Modes - A space-temperature sensing element, located as shown, acting through a microprocessor-based VAV-box controller, shall modulate the supply-air control damper to maintain the cooling setpoint as shown until the supply-air damper closes to minimum supply-airflow. When the space temperature calls for heat after the supply-air damper is closed to minimum flow, control shall then pass through the temperature dead-band as shown. When the space temperature has dropped through the temperature dead-band as shown, the VAV box fan shall be energized. When the space temperature has dropped through a second temperature dead-band, the duct heater coil shall be gradually controlled to maintain the heating setpoint.

3.3.18.13 Emergency Fan Shutdown

Activation of a duct smoke detector in the supply-air or return-air ductwork, or activation of a manual emergency fan shutdown switch shall cause the associated fan to shutdown in accordance with NFPA 90A. Activation of these devices shall operate a pilot light on the HVAC control panel. The panel shall require manual resetting after the detector and the manual switch are reset.

3.3.19 Single-Zone with Hydronic Heating/Cooling Coils No Return Fan

3.3.19.1 Occupied, Unoccupied, and Ventilation-Delay Modes

Ventilation-delay-mode timing shall start prior to the occupied-mode timing. The timeclock shall close a contact, which shall turn on the ventilation-delay pilot light and energize a relay which shall prevent the outside-air damper from opening. At the time shown, the timeclock shall close a contact which shall turn on the occupied-mode pilot light and shall place the system in the occupied mode. At the expiration of the ventilation-delay-mode timing period, the timeclock shall open the contact to turn off the ventilation-delay-mode pilot light and de-energize a relay to allow the outside-air damper to open. At the time shown, the timeclock shall open the contact to turn off the occupied-mode pilot light and shall place the control system in the unoccupied mode of operation.

3.3.19.2 Outside-Air, Return-Air, and Relief-Air Dampers

a. Occupied Mode - The outside-air, return-air, and relief-air dampers shall be under space temperature and economizer control.

b. Unoccupied and Ventilation-Delay Modes - The dampers shall return to their normal positions.

3.3.19.3 Supply-Fan Control

a. Occupied and Ventilation-Delay Modes - Supply fan [_____] shall start, and shall operate continuously.

b. Unoccupied Mode - The supply fan shall cycle from a night thermostat. The fan shall start at and stop at the setpoints as shown.

3.3.19.4 Filter

A differential-pressure switch across the filter shall turn on the filter pilot light when the pressure drop across the filter reaches the setpoint as shown.

3.3.19.5 Freeze Protection

All Modes - A freezestat, located as shown, shall stop the supply fan, cause the outside air, return air, and relief air dampers to return to their normal position as shown, and shall turn on the low-temperature pilot light in the HVAC control panel if the temperature drops below the freezestat's setpoint as shown. Return to the normal mode of operation shall require manual reset [at the freezestat and] at the HVAC control panel.

3.3.19.6 Hydronic Cooling Coil

a. Occupied and Ventilation-Delay Modes - The control valve shall be modulated by the space-temperature controller.

b. Unoccupied Mode - The space-temperature controller output signal shall be interrupted and the cooling-coil control valve shall be closed.

3.3.19.7 Economizer Control

An economizer controller shall accept the signal of an outside-air temperature-sensing element and transmitter at its remote setpoint input and shall accept the signal of a return-air temperature-sensing element and transmitter at its process variable input. The economizer controller shall perform switchover between outside-air economizer control mode and minimum outside-air mode. Until the return-air temperature rises above the setpoint as shown, the economizer controller shall hold the system in the minimum-outside-air mode and the economizer pilot light shall be off. When the return-air temperature rises above the setpoint, the economizer controller shall place the control system in the economizer mode or in the minimum-outside-air mode as determined by a comparison of the outside-air and return-air temperatures in accordance with the differential temperature setpoints as shown. When the outside-air temperature is low with respect to the return-air temperature, the control system shall be in the economizer mode and the economizer pilot light shall be on. When the economizer controller places the control system in the minimum-outside-air mode, the outside-air damper shall be open to the setting determined by the minimum-position switch.

3.3.19.8 Space-Temperature-Sequenced Heating and Cooling Control

A space-temperature sensing element and transmitter operating through a space-temperature controller shall maintain the setpoint by sequencing the valves and dampers as shown. On a rise in space temperature, the space-temperature controller shall first gradually close the heating-coil valve. After the controller output passes through a deadband, the controller shall then gradually operate the outside-air damper to admit outside air beyond the minimum quantity, except that when the economizer controller places the system in the minimum-outside-air mode, the outside-air damper shall be open to the setting as determined by the minimum-position switch. After the outside-air damper is fully open, upon a further rise in space temperature, the controller shall then gradually open the cooling-coil valve to maintain the setpoint as shown.

3.3.19.9 Emergency Fan Shutdown

Activation of a duct smoke detector in the supply-air or return-air ductwork, or activation of a manual emergency fan shutdown switch shall cause the associated fan to shutdown in accordance with NFPA 90A. Activation of these devices shall operate a pilot light on the HVAC control panel. The panel shall require manual resetting after the detector and the manual switch are reset.

3.3.20 Single-Zone with Dual-Temperature Coil; No Return Fan

3.3.20.1 Occupied, Unoccupied, and Ventilation-Delay Modes

Ventilation-delay-mode timing shall start prior to the occupied-mode timing. The timeclock shall close a contact, which shall turn on the ventilation-delay pilot light and energize a relay which shall prevent the outside-air damper from opening. At the time shown, the timeclock shall close a contact which shall turn on the occupied-mode pilot light and shall place the system in the occupied mode. At the expiration of the ventilation-delay-mode timing period, the timeclock shall open the contact to turn off the ventilation-delay-mode pilot light and de-energize a relay to allow the outside-air damper to open. At the time shown, the timeclock shall open the contact to turn off the occupied-mode pilot light and shall place the control system in the unoccupied mode of operation.

3.3.20.2 Outside-Air, Return-Air, and Relief-Air Dampers

a. Occupied Mode - The outside-air, return-air, and relief-air dampers shall be under space temperature and economizer control.

b. Unoccupied and Ventilation-Delay Modes - The dampers shall return to their normal positions as shown.

3.3.20.3 Supply-Fan Control

a. Occupied and Ventilation-Delay Modes - Supply fan [_____] shall start, and shall operate continuously.

b. Unoccupied Mode - The supply fan shall cycle from a night thermostat. The fan shall start at and stop at the setpoints as shown.

3.3.20.4 Filter

A differential-pressure switch across the filter shall turn on the filter pilot light when the pressure drop across the filter reaches the setpoint as shown.

3.3.20.5 Freeze Protection

All Modes - A freezestat, located as shown, shall stop the supply fan, cause the outside air, return air, and relief air dampers to return to their normal position as shown, and shall turn on the low-temperature pilot light in the HVAC control panel if the temperature drops below the freezestat's setpoint as shown. Return to the normal mode of operation shall require manual reset [at the freezestat and] at the HVAC control panel.

3.3.20.6 Dual-Temperature Coil Changeover Control

An aquastat, set at the setpoint shown, shall select the heating-season space-temperature controller or the cooling-season space-temperature controller to operate the dual-temperature coil control valve. When hydronic heating is supplied to the dual-temperature coil, the heating-season controller shall be selected to control the dual-temperature control valve as a heating-coil valve in sequence with the outside-air, return-air and relief-air dampers, the heating pilot light shall turn on and the cooling pilot light shall turn off. When hydronic cooling is supplied to the dual-temperature coil, the cooling-season controller shall be selected to operate the dual-temperature control valve as a cooling-coil valve in sequence with outside-air, return-air and relief-air dampers, the cooling pilot light shall turn on and the heating pilot light shall turn off.

3.3.20.7 Dual-Temperature Coil

All Modes - The dual-temperature coil valve shall be modulated by the heating-season controller or by the cooling-season controller as selected.

3.3.20.8 Economizer Control

An economizer controller shall accept the signal of an outside-air temperature-sensing element and transmitter at its remote setpoint input and shall accept the signal of a return-air temperature-sensing element and

transmitter at its process variable input. The economizer controller shall perform switchover between outside-air economizer control mode and minimum outside-air mode. Until the return-air temperature rises above the setpoint as shown, the economizer controller shall hold the system in the minimum-outside-air mode and the economizer pilot light shall be off. When the return-air temperature rises above the setpoint, the economizer controller shall place the control system in the economizer mode or in the minimum-outside-air mode as determined by a comparison of the outside-air and return-air temperatures in accordance with the differential temperature setpoints as shown. When the outside-air temperature is low with respect to the return-air temperature, the control system shall be in the economizer mode and the economizer pilot light shall be on. When the economizer controller places the control system in the minimum-outside-air mode, the outside-air damper shall be open to the setting determined by the minimum-position switch.

3.3.20.9 Space-Temperature-Sequenced Heating Control

A space-temperature sensing element and transmitter operating through the heating-season space-temperature controller shall maintain the setpoint by sequencing the dual-temp coil valve and the dampers as shown. On a rise in space temperature, the controller shall first gradually close the coil valve. After the controller output passes through a deadband, the controller shall then gradually operate the outside-air damper to admit outside air beyond the minimum quantity, except that when the economizer controller places the system in the minimum-outside-air mode, the outside-air damper shall be open to the setting as determined by the minimum-position switch.

3.3.20.10 Space-Temperature Sequenced Cooling Control

A space-temperature sensing element and transmitter operating through the cooling-season space-temperature controller shall maintain the setpoint by sequencing the dual-temp coil valve and the dampers as shown. On a rise in space temperature, the controller shall first gradually open the outside-air damper to admit outside-air beyond the minimum quantity, except that when the economizer controller places the system in the minimum-outside-air mode, the outside-air damper shall be open to the setting as determined by the minimum-position switch. When the outside-air damper is fully open, on a further rise in space temperature, the controller shall gradually open the coil valve.

3.3.20.11 Emergency Fan Shutdown

Activation of a duct smoke detector in the supply-air or return-air ductwork, or activation of a manual emergency fan shutdown switch shall cause the associated fan to shutdown in accordance with NFPA 90A. Activation of these devices shall operate a pilot light on the HVAC control panel. The panel shall require manual resetting after the detector and the manual switch are reset.

3.3.21 Single-Zone Control Sequence with Humidity Control; No Return Fan

3.3.21.1 Occupied, Unoccupied, and Ventilation Delay Modes

Ventilation-delay-mode timing shall start prior to the occupied-mode timing. The timeclock shall close a contact, which shall turn on the ventilation-delay pilot light and energize a relay which shall prevent the outside-air damper from opening. At the time shown, the timeclock shall

close a contact which shall turn on the occupied-mode pilot light and shall place the system in the occupied mode. At the expiration of the ventilation-delay-mode timing period, the timeclock shall open the contact to turn off the ventilation-delay-mode pilot light and de-energize a relay to allow the outside-air damper to open. At the time shown, the timeclock shall open the contact to turn off the occupied-mode pilot light and shall place the control system in the unoccupied mode of operation.

3.3.21.2 Outside-Air Damper

a. Occupied Mode - The outside-air damper shall open.

b. Unoccupied and Ventilation-Delay Modes - The damper shall close.

3.3.21.3 Supply-Fan Control

a. Occupied and Ventilation-Delay Modes - Supply fan [_____] shall start, and shall operate continuously.

b. Unoccupied Mode - The supply fan shall cycle from a night thermostat. The fan shall start and stop at the setpoint as shown.

3.3.21.4 Filter

A differential-pressure switch across the filter shall turn on the filter pilot light when the pressure drop across the filter reaches the setpoint as shown.

3.3.21.5 Outside-Air Preheat-Coil Control

All Modes - The preheat-coil temperature controller shall modulate the control valve from the signal of a temperature-sensing element and transmitter in the coil discharge air to maintain the setpoint as shown.

3.3.21.6 Freeze Protection

All Modes - A freezestat, located as shown, shall stop the supply fan, cause the outside air, return air, and relief air dampers to return to their normal position as shown, and shall turn on the low-temperature pilot light in the HVAC control panel if the temperature drops below the freezestat's setpoint as shown. Return to the normal mode of operation shall require manual reset [at the freezestat and] at the HVAC control panel.

3.3.21.7 Cooling Coil

a. Occupied and Ventilation Delay Modes - A high-signal selector shall compare the outputs from a space-temperature controller and a space- relative-humidity controller and use the highest of the two to modulate the cooling coil control valve.

b. Unoccupied Mode - The high-signal selector output signal shall be interrupted and the cooling coil control valve shall be closed.

3.3.21.8 Humidity Control

a. Occupied Mode - The space-relative-humidity controller shall operate the humidifier control valve and the cooling coil valve. The space-relative-humidity controller shall operate through a

signal invertor and a high-signal selector to open the cooling coil valve in the event that the space relative humidity continues to rise after the humidifier valve is closed. The space-relative-humidity controller and a duct high-limit relative-humidity controller shall operate through a low-signal selector to control the humidifier valve. The space-relative-humidity controller shall gradually operate the humidifier valve from the signal of a relative-humidity sensing element and transmitter in the space to maintain the relative-humidity setpoint as shown. The duct high-limit relative-humidity controller shall receive a signal from a relative-humidity sensing element and transmitter in the ductwork downstream of the humidifier and shall limit the relative humidity at that point to a high-limit relative-humidity setpoint as shown.

b. Unoccupied and Ventilation-Delay Modes - The signal to the humidifier valve shall be interrupted, and the humidifier valve shall be closed.

3.3.21.9 Constant-Temperature Hydronic-Heating Control

All Modes - A temperature controller shall accept signals from a temperature sensing element and transmitter in the heating supply line, and shall modulate the system control valve to maintain the setpoint as shown.

3.3.21.10 Reheat

All Modes - A space thermostat shall gradually close the reheat-coil valve on a rise in space temperature to maintain the setpoint as shown.

3.3.21.11 Emergency Fan Shutdown

Activation of a duct smoke detector in the supply-air or return-air ductwork, or activation of a manual emergency fan shutdown switch shall cause the associated fan to shutdown in accordance with NFPA 90A. Activation of these devices shall operate a pilot light on the HVAC control panel. The panel shall require manual resetting after the detector and the manual switch are reset.

3.3.22 Single-Zone - Hydronic Heating and Direct-Expansion Cooling Coils

3.3.22.1 Occupied, Unoccupied, and Ventilation-Delay Modes

Ventilation-delay mode timing shall start prior to the occupied-mode timing. The timeclock shall close a contact, which shall turn on the ventilation-delay pilot light and energize a relay which shall prevent the outside-air damper from opening. At the time shown, the timeclock shall close a contact which shall turn on the occupied-mode pilot light and shall place the system in the occupied mode. At the expiration of the ventilation-delay-mode timing period, the timeclock shall open the contact to turn off the ventilation-delay mode pilot light and de-energize a relay to allow the outside-air damper to open. At the time shown, the timeclock shall open the contact to turn off the occupied-mode pilot light and shall place the control system in the unoccupied mode of operation.

3.3.22.2 Outside-Air, Return-Air, and Relief-Air Dampers

a. Occupied Mode - The outside-air, return-air, and relief-air dampers shall be under mixed-air temperature and economizer

control.

b. Unoccupied and Ventilation-Delay Modes - The dampers shall return to their normal positions as shown.

3.3.22.3 Supply-Fan Control

a. Occupied and Ventilation-Delay Modes - Supply fan [_____] shall start, and shall operate continuously.

b. Unoccupied Mode - The supply fan shall cycle from a night-thermostat. The fan shall start at and stop at the setpoints as shown.

3.3.22.4 Filter

A differential-pressure switch across the filter shall turn on the filter pilot light when the pressure drop across the filter reaches the setpoint as shown.

3.3.22.5 Freeze Protection

All Modes - A freezestat, located as shown, shall stop the supply fan, cause the outside air, return air, and relief air dampers to return to their normal position as shown, and shall turn on the low-temperature pilot light in the HVAC control panel if the temperature drops below the freezestat's setpoint as shown. Return to the normal mode of operation shall require manual reset [at the freezestat and] at the HVAC control panel.

3.3.22.6 Direct Expansion Cooling Coil

a. Occupied and Ventilation-Delay Modes - The stages of cooling shall be operated by the space-temperature controller.

b. Unoccupied Mode - The space-temperature controller output signal shall be interrupted and cooling shall be off.

3.3.22.7 Economizer Control

An economizer controller shall accept the signal of an outside-air temperature-sensing element and transmitter at its remote setpoint input and shall accept the signal of a return-air temperature-sensing element and transmitter at its process variable input. The economizer controller shall perform switchover between outside-air economizer control mode and minimum-outside-air mode. Until the return-air temperature rises above the setpoint as shown, the economizer controller shall hold the system in the minimum-outside-air mode and the economizer pilot light shall be off. When the return-air temperature rises above the setpoint, the economizer controller shall place the control system in the economizer mode or in the minimum-outside-air mode as determined by a comparison of the outside-air and return-air temperatures in accordance with the differential temperature setpoints as shown. When the outside-air temperature is low with respect to the return-air temperature, the control system shall be in the economizer mode and the economizer pilot light shall be on. When the economizer controller places the control system in the minimum-outside-air mode, the outside-air damper shall be open to the setting determined by the minimum-position switch.

3.3.22.8 Space-Temperature-Sequenced Heating and Cooling Control

A space-temperature sensing element and transmitter operating through a space-temperature controller shall maintain the setpoint by sequencing the heating coil valve, dampers, and stages of DX cooling as shown. On a rise in space temperature, the controller shall first gradually close the heating-coil valve. After the controller output passes through a deadband, the controller shall then gradually operate the outside-air damper to admit outside air beyond the minimum quantity, except that when the economizer controller places the system in the minimum-outside-air mode, the outside-air damper shall be open to the setting as determined by the minimum-position switch. After the outside-air damper is fully open, upon a further rise in space temperature, the controller shall then operate the stages of cooling in sequence to maintain the setpoint as shown.

3.3.22.9 Emergency Fan Shutdown

Activation of a duct smoke detector in the supply-air or return-air ductwork, or activation of a manual emergency fan shutdown switch shall cause the associated fan to shutdown in accordance with NFPA 90A. Activation of these devices shall operate a pilot light on the HVAC control panel. The panel shall require manual resetting after the detector and the manual switch are reset.

3.4 COMMISSIONING PROCEDURES

3.4.1 General Procedures

3.4.1.1 Evaluations

The Contractor shall make the observations, adjustments, calibrations, measurements, and tests of the control systems, tune the controllers, set the timeclock schedule, and make any necessary control-system corrections to ensure that the systems function as described in paragraph CONTROL SEQUENCES OF OPERATION. The Contractor shall permanently record, on system equipment schedule, the final setting of controller proportional, integral and derivative constant settings, setpoint, manual reset setting, maximum and minimum controller output, and ratio and bias settings, in units and terminology specific to the controller.

3.4.1.2 Item Check

An item-by-item check of the sequence of operation requirement shall be performed using Steps 1 through 4 in the specified control system commissioning procedures. Steps 1, 2, and 3 shall be performed with the HVAC system shutdown; Step 4 shall be performed after the HVAC systems have been started. Signals used to change the mode of operation shall originate from the actual HVAC control device intended for the purpose, such as the time clock. External input signals to the HVAC control panel (such as EMCS, starter auxiliary contacts, and external systems) may be simulated in Steps 1, 2, and 3. With each operational-mode change signal, pilot lights and HVAC-panel output-relay contacts shall be observed to ensure that they function. All terminals assigned to EMCS shall be checked and observed to ensure that the proper signals are available.

3.4.1.3 Weather-Dependent Test Procedures

Weather-dependent test procedures that cannot be performed by simulation shall be performed in the appropriate climatic season. When simulation is

used, the Contractor shall verify the actual results in the appropriate season.

3.4.1.4 Configuration

The Contractor shall configure each controller for its specified service.

3.4.1.5 Two-Point Accuracy Check

A two-point accuracy check of the calibration of each HVAC-control-system sensing element and transmitter shall be performed by comparing the HVAC-control-panel readout to the actual value of the variable measured at the sensing element and transmitter or airflow measurement station location. Digital indicating test instruments shall be used, such as digital thermometers, motor-driven psychrometers, and tachometers. The test instruments shall be at least twice as accurate as the specified sensing element-to-controller readout accuracy. The calibration of the test instruments shall be traceable to NIST standards. The first check point shall be with the HVAC system in the shutdown condition, and the second check point shall be with the HVAC system in an operational condition. Calibration checks shall verify that the sensing element-to-controller readout accuracies at two points are within the specified product accuracy tolerances. If not, the device shall be recalibrated or replaced and the calibration check repeated.

3.4.1.6 Insertion, Immersion Temperature

Insertion-temperature and immersion-temperature sensing element and transmitter-to-controller readout calibration accuracy shall be checked at one physical location along the axis of the sensing element.

3.4.1.7 Averaging Temperature

Averaging-temperature sensing element and transmitter-to-controller readout calibration accuracy shall be checked every 1/2 meter along the axis of the sensing element in the proximity of the sensing element, for a maximum of 10 readings. These readings shall then be averaged.

3.4.1.8 Controller Stations

The Contractor shall use the controllers' MANUAL/AUTOMATIC stations as the means of manipulating control devices, such as dampers and valves, to check IP operation and to effect stable conditions prior to making measurement checks.

3.4.1.9 Controller-Tuning Procedure

The Contractor shall perform a controller-tuning procedure, which shall consist of setting the initial proportional, integral, and derivative (PID) mode constants, controller setpoints, and logging the settings. Tuning shall be self-tuning operation by the controller unless manual tuning is necessary.

3.4.1.10 Controller Manual-Tuning Procedure

Where required, the controller manual-tuning procedure shall be performed in three steps. Using a constant-temperature-setpoint controller as an example, these steps are:

a. Step A:

(1) The controller MANUAL/AUTO station shall be indexed to the AUTO position and the integral- and derivative-mode constants set to zero.

(2) The proportional-mode constant shall be set to an initial setting of 8 percent. (This corresponds to 18.6 kPa per degree C or 3.6 ma per degree C proportional controller output change for a 55.5 degree C transmitter span.) This causes the controller output signal to vary from live zero output to full output for an input signal change representing an 4.5 degree C change.

(3) Controllers for other variables, such as relative humidity and static pressure, shall have their proportional-mode constants set initially in a similar manner for an achievable output range proportional to the transmitter span.

b. Step B:

(1) The controller temperature setpoint shall be set at any achievable temperature. The controller output and transmitter input shall be observed.

(2) If the transmitter input continuously oscillates above and below the setpoint without settling at a fixed value, or if such oscillation increases, the proportional-mode constant is too small.

(3) If the proportional-mode constant is too small, increase it in steps until the transmitter input indicates stable control at any temperature, provided that the controller output is not at either extreme of the output range.

(4) If the temperature control point slowly drifts toward or away from the controller setpoint, the proportional-mode constant is too large. Its setting shall be decreased in steps until oscillations occur as described in the preceding paragraphs, and then the setting shall be increased until stable control occurs.

(5) A step change in controller setpoint shall be introduced. This should cause the controller to overshoot the setpoint slightly, with each subsequent overshoot peak value decreasing by a factor of 2/3 until stable control is achieved at, above, or below the setpoint.

(6) Next, the integral-mode constant setting shall be increased in small steps, and setpoint changes shall be introduced until control point and controller setpoint coincide at stable control. This should happen consistently after a setpoint change within a short time, such as 5 to 10 minutes.

c. Step C:

(1) Unless the HVAC process variable changes rapidly, the derivative-mode constant setting can remain at zero.

(2) If derivative control is needed, the derivative-mode constant shall be gradually increased.

(3) Step changes in controller setpoint shall be introduced, and the derivative-mode constant setting adjusted until stable control is achieved.

3.4.1.11 Setting the Controller

After the controller manual-tuning procedure is complete, the controller shall be set at the setpoint as shown.

3.4.2 Space-Temperature-Controlled Perimeter Radiation

The heating medium shall be turned on, and the thermostat temperature setpoint shall be raised. The valve shall open. The thermostat temperature shall be lowered and the valve shall close. The thermostat shall be set at the setpoint shown.

3.4.3 Unit Heater and Cabinet Unit Heater

The "OFF/AUTO" switch shall be placed in the "OFF" position. Each space-thermostat temperature setting shall be turned up so that it makes contact to turn on the unit-heater fans. The unit-heater fans shall not start. The "OFF/AUTO" switch shall be placed in the "AUTO" position. The unit-heater fans shall start. Each space-thermostat temperature setting shall be turned down, and the unit-heater fans shall stop. The thermostats shall be set at their temperature setpoints as shown. The results of testing of one of each type of unit shall be logged.

3.4.4 Gas-Fired Infrared-Heater

Each space-thermostat temperature setting shall be turned up so that it makes contact to turn on the infrared heater; the heater shall turn on. Each space-thermostat temperature shall be turned down and the infrared heater shall turn off. The thermostats shall be set at their temperature setpoints as shown. The results of testing of one of each type of unit shall be logged.

3.4.5 All-Air Small Packaged Unitary

The schedules shall be manually entered for day-temperature and night-temperature setpoints as shown. The fan "AUTO/ON" switch shall be set to "ON". The time shall be manually entered as "DAY". The heating-cooling switch shall be raised to "HEATING" and cooling shall be off. The temperature setpoint shall be raised and heating shall start. The heating/cooling switch shall be set to "COOLING" and heat shall be off. The temperature setpoint shall be lowered and cooling shall start. The fan "AUTO/ON" switch shall be set to "AUTO" and the foregoing procedure repeated. The fan shall start and stop automatically with the starting and stopping of heating and cooling. The time shall be manually entered as "NIGHT". The foregoing procedures shall be repeated. When the system is verified as operational, the correct "DAY" and "NIGHT" temperature settings shall be restored and the correct time restored. The power to the thermostat shall be shut off and it shall be verified that the thermostat clock keeps time. The results of testing of one of each type of unit shall be logged.

3.4.6 Fan-Coil-Unit

The dual-temperature hydronic system shall be set to heating. Each space thermostat temperature setting shall be turned up so that it makes contact

and turns the fan-coil unit on. The fan-coil unit fan shall start and the valves shall open to flow through the coils. Each space thermostat temperature setting shall be turned down and the fan-coil unit fans shall stop. The valves shall close to flow through the coils. The dual-temperature hydronic system shall be switched to cooling. Each space thermostat temperature setting shall be turned up; contact shall be broken and the fan-coil unit fans shall stop. The valves shall close to flow through the coil. Each space thermostat temperature setting shall be turned down. The fan-coil unit fans shall start and the valves shall open to flow through the coils. The thermostats shall be set at the temperature setpoints as shown. The results of testing of one of each type of unit shall be logged.

3.4.7 Central Plant Hydronic-Heating with Steam/Hot Water Converter

Installation shall be as follows:

a. Step 1 - System Inspection: The HVAC system shall be observed in its shutdown condition. Power and main air shall be available at the HVAC system control panel. The converter valve shall be closed.

b. Step 2 - Calibration Accuracy Check with HVAC System Shutdown: Readings shall be taken with a digital thermometer at each temperature sensing element location. Each controller display shall be read, and the thermometer and controller-display readings logged. The calibration accuracy of the sensing element-to-controller readout for outside-air temperature and system-supply temperature shall be checked.

c. Step 3 - Actuator Range Adjustments: A signal shall be applied to the actuator, using the controller "MANUAL/AUTO" station in "MANUAL". The proper operation of the actuators and positions for all valves shall be verified. The signal shall be varied from live zero of 4 ma [or 21 kPa] to 20 ma [or 103 kPa], and it shall be verified that the actuators travel from zero stroke to full stroke within the signal range. It shall be verified that all sequenced actuators move from zero stroke to full stroke in the proper direction and move the connected device in the proper direction from one extreme position to the other.

d. Step 4 - Control-System Commissioning:

(1) The outside-air temperature controller "MANUAL/AUTO" station shall be indexed to the "MANUAL" position and the two-point calibration sensing element-to-controller readout accuracy check for the outside-air temperature performed. The controller proportional band adjustment, the setpoint, the manual reset, and the maximum controller output shall be set to achieve the outside-air temperature schedule as shown.

(2) A signal shall be applied to simulate that the outside-air temperature is above the setpoint as shown. It shall be verified that pump [_____] stops. A signal shall be applied to simulate that the outside-air temperature is below the setpoint as shown. It shall be verified that pump [_____] starts.

(3) The system's supply-temperature controller "MANUAL/AUTO" station shall be indexed to the "MANUAL" position, and the

two-point calibration accuracy check of the sensing element-to-controller readout for the system-supply temperature performed. The controller shall be placed in the remote-setpoint mode. The remote setpoint shall be set for temperature schedule as shown. The controller "MANUAL/AUTO" station shall be indexed to the "AUTO" position, and the controller setup and tuning procedures performed. The controller shall be set at a system-supply temperature setpoint within the schedule as shown and the mode-constant setpoints logged. Signals of 8 ma and 16 ma shall be sent to the remote setpoint from the outside-air temperature controller, to verify that the controller setpoint changes to the appropriate values. The outside-air temperature controller's "MANUAL/AUTO" station shall be indexed to "AUTO".

(4) An occupied-mode signal shall be applied. Each space-temperature controller's "MANUAL/AUTO" station shall be indexed to "MANUAL". The calibration accuracy check of sensing element-to-controller readout for each space temperature, shall be performed and the values logged. Each controller shall be placed in the remote-setpoint mode. The setpoint low-end limit shall be set to 19 degrees C and the high-end limit shall be set to 22 degrees C. The proper action of each temperature-setpoint device at the space-temperature sensing element and transmitter location shall be verified. Each controller's "MANUAL/AUTO" station shall be indexed to the "AUTO" position, and the controller-tuning procedure performed. An unoccupied-mode signal shall be applied, and it shall be verified that each controller's setpoint changes to the unoccupied-mode setting. Each temperature setpoint device shall be set to the space-temperature setpoint as shown.

3.4.8 Single Building Hydronic-Heating with Hot Water Boiler

Steps for installation shall be as follows:

a. Step 1 - System Inspection: The HVAC system shall be observed in its shutdown condition. It shall be verified that power and main air are available at the HVAC system control panel.

b. Step 2 - Calibration Accuracy Check with HVAC System Shutdown: Readings shall be taken with a digital thermometer at each temperature-sensing element location. Each controller display shall be read, and the thermometer and controller-display readings logged. The calibration accuracy of the sensing element-to-controller readout for outside-air temperature and system-supply temperature shall be checked.

c. Step 3 - Actuator Range Adjustments: A signal shall be applied to the actuator using the controller "MANUAL/AUTO" station in "MANUAL." The proper operation of the actuators and positioners for all valves shall be verified visually. The signal shall be varied from live zero of 4 ma [or 21 kPa] to 20 ma [or 103 kPa], and it shall be verified that the actuators travel from zero stroke to full stroke within the signal range. It shall be verified that all sequenced actuators move from zero stroke to full stroke in the proper direction, and move the connected device in the proper direction from one extreme position to the other. Example: NC actuators are closed at 4 ma [or 21 kPa] and are open at 20 ma [or 103 kPa]. The signal levels that move the controlled device to its extreme positions shall be logged.

d. Step 4 - Control-System Commissioning:

(1) The outside-air temperature controller "MANUAL/AUTO" station shall be indexed to the "MANUAL" position and the two-point calibration sensing element-to-controller readout accuracy check for the outside-air temperature performed. The controller proportional band adjustment, the setpoint, the manual reset, and the maximum controller output shall be set to achieve the outside-air temperature schedule as shown.

(2) A signal shall be applied to simulate that the outside-air temperature is above the setpoint as shown. It shall be verified that pumps [_____] and boiler [_____] stop. A signal shall be applied to simulate that the outside-air temperature is below the setpoint as shown. It shall be verified that pumps [_____] start and boiler [_____] operates.

(3) The system's supply-temperature controller "MANUAL/AUTO" station shall be indexed to the "MANUAL" position, and the two-point calibration accuracy check of the sensing element-to-controller readout for the system-supply temperature performed. The controller shall be placed in the remote-setpoint mode. The remote setpoint for temperature schedule shall be set as shown. The controller "MANUAL/AUTO" station shall be indexed to the "AUTO" position, and the controller setup and tuning procedures performed. The controller shall be set at a system-supply temperature setpoint within the schedule as shown and the mode-constant setpoints logged. Signals of 8 ma and 16 ma shall be sent to the remote setpoint from the outside-air temperature controller, to verify that the controller setpoint changes to the appropriate values. The outside-air temperature controller's "MANUAL/AUTO" station shall be indexed to "AUTO."

(4) An occupied-mode signal shall be applied. Each space-temperature controller "MANUAL/AUTO" station shall be indexed to "MANUAL." The calibration accuracy check of sensing element-to-controller readout for each space temperature shall be performed, and the values logged. The controller shall be placed in the remote-setpoint mode. The setpoint low-end limit shall be set to 19 degrees C and the high-end limit shall be set to 22 degrees C. The proper action of the temperature-setpoint device at the space-temperature sensing element and transmitter location shall be verified. Each controller "MANUAL/AUTO" station shall be indexed to the "AUTO" position and the controller-tuning procedure performed. An unoccupied-mode signal shall be applied and it shall be verified that each controller's setpoint changes to the unoccupied-mode setting. The temperature setpoint device shall be set to the space-temperature setpoint as shown.

3.4.9 Central Plant High-Temperature Hot-Water Hydronic-Heating

Steps for installation shall be as follows:

a. Step 1 - System Inspection: The HVAC system shall be observed in its shutdown condition. Power and main air shall be available at the HVAC system control panel. The converter valve shall be closed.

b. Step 2 - Calibration Accuracy Check with HVAC System Shutdown: Readings shall be taken with a digital thermometer at each temperature sensing element location. Each controller display shall be read, and the thermometer and controller-display readings logged. The calibration accuracy of the sensing element-to-controller readout for outside-air temperature and system-supply temperature shall be checked.

c. Step 3 - Actuator Range Adjustments: A signal shall be applied to the actuator, using the controller "MANUAL/AUTO" station in "MANUAL." The proper operation of the actuators and positioners for all valves shall be verified. The signal shall be varied from live zero of 4 ma [or 21 kPa] to 20 ma [or 103 kPa], and it shall be verified that the actuators travel from zero stroke to full stroke within the signal range. It shall be verified that all sequenced actuators move from zero stroke to full stroke in the proper direction, and move the connected device in the proper direction from one extreme position to the other.

d. Step 4 - Control-System Commissioning:

(1) The outside-air temperature controller "MANUAL/AUTO" station shall be indexed to the "MANUAL" position and the two-point calibration sensing element-to-controller readout accuracy check for the outside-air temperature shall be performed. The controller proportional band adjustment, the setpoint, the manual reset, and the maximum controller output shall be set to achieve the outside-air temperature schedule as shown.

(2) A signal shall be applied to simulate that the outside-air temperature is above the setpoint as shown. It shall be verified that pump [_____] stops. A signal shall be applied to simulate that the outside-air temperature is below the setpoint as shown. It shall be verified that pump [_____] starts.

(3) The system's supply-temperature controller "MANUAL/AUTO" station shall be indexed to the "MANUAL" position, and the two-point calibration accuracy check of the sensing element-to-controller readout for the system-supply temperature shall be performed. The controller shall be placed in the remote-setpoint mode. The remote setpoint shall be set for temperature schedule as shown. The controller "MANUAL/AUTO" station shall be indexed to the "AUTO" position, and the controller setup and tuning procedures performed. The controller shall be set at a system-supply temperature setpoint within the range as shown and the mode-constant setpoints logged. Signals of 8 ma and 16 ma shall be sent to the remote setpoint, from the outside-air temperature controller, to verify that the controller setpoint changes to the appropriate values. The outside-air temperature controller's "MANUAL/AUTO" station shall be indexed to "AUTO." A high-temperature condition shall be initiated in the system supply line by lowering the thermostat setting. It shall be verified that the high-temperature hot-water shutoff valve closes and the pilot light turns on. The thermostat shall be set at the setting shown, the safety circuit shall be manually reset, and it shall be verified that the shutoff valve opens and the pilot light turns off.

(4) An occupied-mode signal shall be applied. Each

space-temperature controller "MANUAL/AUTO" station shall be indexed to "MANUAL". The calibration accuracy check of sensing element-to-controller readout for each space temperature shall be performed, and the values logged. The controller shall be placed in the remote-setpoint mode. The setpoint low-end limit shall be set to 19 degrees C and the high-end limit shall be set to 22 degrees C. The proper action of the temperature-setpoint device at the space-temperature sensing element and transmitter location shall be verified. Each controller "MANUAL/AUTO" station shall be indexed to the "AUTO" position, and the controller-tuning procedure shall be performed. An unoccupied-mode signal shall be applied, and it shall be verified that each controller's setpoint changes to the unoccupied-mode setting. The temperature setpoint device shall be set to the space-temperature setpoint as shown.

3.4.10 Central Plant Dual-Temperature Hydronic

Steps for installation shall be as follows:

a. Step 1 - System Inspection: The HVAC system shall be observed in its shutdown condition. Power and main air shall be available at the HVAC system control panel. The converter valve shall be closed.

b. Step 2 - Calibration Accuracy Check with HVAC System Shutdown: Readings shall be taken with a digital thermometer at each temperature sensing element location. Each controller display shall be read, and the thermometer and controller-display readings logged. The calibration accuracy of the sensing element-to-controller readout for outside-air temperature, system-supply temperature, and system-return temperature shall be checked.

c. Step 3 - Actuator Range Adjustments: A signal shall be applied to the actuator, using the controller "MANUAL/AUTO" station in "MANUAL." The proper operation of the actuators and positioners for all valves shall be verified. The signal shall be varied from live zero of 4 ma [or 21 kPa] to 20 ma [or 103 kPa], and it shall be verified that the actuators travel from zero stroke to full stroke within the signal range. It shall be verified that all sequenced actuators move from zero stroke to full stroke in the proper direction, and move the connected device in the proper direction from one extreme position to the other.

d. Step 4 - Control-System Commissioning:

(1) The outside-air temperature controller "MANUAL/AUTO" station shall be indexed to the "MANUAL" position and the two-point calibration sensing element-to-controller readout accuracy check for the outside-air temperature shall be performed. The controller proportional band adjustment, the setpoint, the manual reset, and the maximum controller output shall be set to achieve the outside-air temperature schedule as shown.

(2) The system shall be indexed to the heating mode and it shall be verified that the changeover valves open to flow through the converter and close to flow from central plant chilled water. It shall be verified that the heating pilot light turns on and the cooling pilot light turns off.

(3) A signal shall be applied to simulate that the outside-air temperature is above the setpoint as shown. It shall be verified that pump [_____] stops. A signal shall be applied to simulate that the outside-air temperature is below the setpoint as shown. It shall be verified that pump [_____] starts.

(4) The system's supply-temperature controller "MANUAL/AUTO" station shall be indexed to the "MANUAL" position, and the two-point calibration accuracy check of the sensing element-to-controller readout for the system-supply temperature shall be performed. The controller "MANUAL/AUTO" station shall be indexed to the "AUTO" position, and the controller setup and tuning procedures performed. The controller shall be set at a system-supply temperature setpoint within the schedule as shown and the mode-constant setpoints logged. Signals of 8 ma and 16 ma shall be sent to the remote setpoint from the outside-air temperature controller, to verify that the controller setpoint changes to the appropriate values. The outside-air temperature controller's "MANUAL/AUTO" station shall be indexed to "AUTO."

(5) The return-water aquastat shall be set to the setpoint as shown. An unoccupied-mode signal shall be applied from the system time clock and it shall be verified that the occupied pilot light turns off.

(6) The system shall be indexed to the cooling mode. It shall be verified that the converter control valve closes, the heating pilot light turns off, and that pump [_____] continues to operate until the return-water temperature falls below the setpoint of the return-water aquastat. It shall be verified that when the return-water temperature falls below the setpoint of the return-water aquastat that the changeover valves close to flow through the converter and open to flow from central plant chilled water, that the cooling pilot light turns on and that pump [_____] stops.

(7) An occupied-mode signal shall be applied from the system time clock and it shall be verified that the occupied pilot light turns on, and pump [_____] starts.

3.4.11 Central Plant High-Temperature Hot-Water Dual-Temperature Hydronic

Steps for installation shall be as follows:

a. Step 1 - System Inspection: The HVAC system shall be observed in its shutdown condition. Power and main air shall be available at the HVAC system control panel. The converter control valve shall be closed.

b. Step 2 - Calibration Accuracy Check with HVAC System Shutdown: Readings shall be taken with a digital thermometer at each temperature sensing element location. Each controller display shall be read, and the thermometer and controller-display readings logged. The calibration accuracy of the sensing element-to-controller readout for outside-air temperature and system-supply temperature shall be checked.

c. Step 3 - Actuator Range Adjustments: A signal shall be applied to

the actuator, using the controller "MANUAL/AUTO" station in "MANUAL." The proper operation of the actuators and positioners for all valves shall be verified. The signal shall be varied from live zero of 4 ma [or 21 kPa] to 20 ma [or 103 kPa], and it shall be verified that the actuators travel from zero stroke to full stroke within the signal range. It shall be verified that all sequenced actuators move from zero stroke to full stroke in the proper direction, and move the connected device in the proper direction from one extreme position to the other.

d. Step 4 - Control-System Commissioning:

(1) The outside-air temperature controller "MANUAL/AUTO" station shall be indexed to the "MANUAL" position and the two-point calibration sensing element-to-controller readout accuracy check for the outside-air temperature shall be performed. The controller proportional band adjustment, the setpoint, the manual reset, and the maximum controller output shall be set to achieve the outside-air temperature schedule as shown.

(2) The system shall be indexed to the heating mode and it shall be verified that the changeover valves open to flow through the converter and close to flow from central plant chilled water. It shall be verified that the heating pilot light turns on and the cooling pilot light turns off.

(3) A signal shall be applied to simulate that the outside-air temperature is above the setpoint as shown. It shall be verified that pump [_____] stops. A signal shall be applied to simulate that the outside-air temperature is below the setpoint as shown. It shall be verified that pump [_____] starts.

(4) The system's supply-temperature controller "MANUAL/AUTO" station shall be indexed to the "MANUAL" position, and the two-point calibration accuracy check of the sensing element-to-controller readout for the system-supply temperature shall be performed. The controller "MANUAL/AUTO" station shall be indexed to the "AUTO" position, and the controller setup and tuning procedures performed. The controller shall be set at a system-supply temperature setpoint within the schedule as shown and the mode-constant setpoints logged. Signals of 8 ma and 16 ma shall be sent to the remote setpoint from the outside-air temperature controller, to verify that the controller setpoint changes to the appropriate values. The outside-air temperature controller's "MANUAL/AUTO" station shall be indexed to "AUTO."

(5) The return-water aquastat shall be set to the setpoint as shown. An unoccupied-mode signal shall be applied from the system time clock and it shall be verified that the occupied pilot light turns off.

(6) The system shall be indexed to the cooling mode. It shall be verified that the converter control valve closes, the heating pilot light turns off, and that pump [_____] continues to operate until the return-water temperature falls below the setpoint of the return-water aquastat. It shall be verified that when the return-water temperature falls below the setpoint of the return-water aquastat that the changeover valves close to flow through the converter and open to flow from central plant chilled

water, that the cooling pilot light turns on and that pump [_____] stops.

(7) An occupied-mode signal shall be applied from the system time clock and it shall be verified that the occupied pilot light turns on, and pump [_____] starts.

3.4.12 Single Building Dual-Temperature Hydronic

Steps for installation shall be as follows:

a. Step 1 - System Inspection: The HVAC system shall be observed in its shutdown condition. Power and main air availability at the HVAC system control panel shall be checked.

b. Step 2 - Calibration Accuracy Check with HVAC System Shutdown: Readings shall be taken with a digital thermometer at each temperature-sensing element location. Each controller display shall be read, and the thermometer and controller-display readings logged. The calibration accuracy of the sensing element-to-controller readout for outside-air temperature and system-supply temperature shall be checked.

c. Step 3 - Actuator Range Adjustments: A signal shall be applied to the actuator, using the controller "MANUAL/AUTO" station in "MANUAL". The proper operation of the actuators and positioners for all valves shall be verified. The signal shall be varied from live zero of 4 ma [or 21 kPa] to 20 ma [or 103 kPa], and it shall be verified that the actuators travel from zero stroke to full stroke within the signal range shall be made. It shall be verified that all sequenced actuators move from zero stroke to full stroke in the proper direction, and move the connected device in the proper direction from one extreme position to the other.

d. Step 4 - Control-System Commissioning:
(1) The outside-air temperature controller "MANUAL/AUTO" station shall be indexed to the "MANUAL" position and the two-point calibration sensing element-to-controller readout accuracy check for the outside-air temperature performed. The controller proportional band adjustment, the setpoint, the manual reset, and the maximum controller output shall be set to achieve the outside-air temperature schedule as shown.

(2) The system shall be indexed to the heating mode and it shall be verified that chiller [_____] is shutdown, the cooling pilot light turns off, and that distribution pump [_____] continues to operate until the time delay expires. It shall be verified that the changeover valves open to flow through boiler [_____] and close to flow through chiller [_____] upon expiration of the time delay.

(3) A signal shall be applied to simulate that the outside-air temperature is above the setpoint as shown. It shall be verified that distribution pump [_____] stops, boiler [_____] is stopped, [boiler pump [_____] is stopped,] heating pilot light is turned off, and control of the hydronic-heating system control valve is disabled. A signal shall be applied to simulate that the outside-air temperature is below the setpoint as shown. It shall be verified that distribution pump [_____] starts, boiler [_____]

is started, [boiler pump [_____] is started,] heating pilot light is turned on, and control of the hydronic-heating system control valve is enabled.

(4) The system's supply-temperature controller "MANUAL/AUTO" station shall be indexed to the "MANUAL" position, and the two-point calibration accuracy check of the sensing element-to-controller readout for the system-supply temperature shall be performed. The controller "MANUAL/AUTO" station shall be indexed to the "AUTO" position, and the controller setup and tuning procedures performed. The controller shall be set at a system-supply temperature setpoint within the schedule as shown and the mode-constant setpoints logged. Signals of 8 ma and 16 ma shall be sent to the remote setpoint from the outside-air temperature controller, to verify that the controller setpoint changes to the appropriate values. The outside-air temperature controller's "MANUAL/AUTO" station shall be indexed to "AUTO."

(5) The return-water aquastat shall be set to the setpoint as shown. An unoccupied mode signal shall be applied from the system time clock. It shall be verified that the occupied pilot light turns off.

(6) The system shall be indexed to the cooling mode. It shall be verified that boiler [_____] shuts down, [boiler pump [_____] shuts down,] the heating pilot light turns off, and distribution pump [_____] continues to operate until the return-water temperature falls below the setpoint of the return-water aquastat. It shall be verified that when the return-water temperature falls below the setpoint of the return-water aquastat the changeover valves close to flow through the boiler [_____] and open to flow through chiller [_____] and distribution pump [_____] stops.

(7) An occupied-mode signal shall be applied from the system time clock and it shall be verified that the occupied pilot light turns on, the cooling pilot light turns on, distribution pump [_____] starts, and chiller operation is enabled.

(8) An unoccupied-mode signal shall be applied from the system time clock and it shall be verified that the occupied pilot light turns off, the cooling pilot light turns off, chiller [_____] shuts down and distribution pump [_____] continues to operate until the expiration of the time delay and then stops.

3.4.13 Heating and Ventilating

Steps for installation are as follows:

a. Step 1 - System Inspection: The HVAC system shall be observed in its shutdown condition. Power and main air shall be available at the HVAC system control panel. The outside-air damper and relief-air damper shall be closed and the return-air damper shall be open.

b. Step 2 - Calibration Accuracy Check with HVAC System Shutdown: Readings shall be taken with a digital thermometer at each temperature-sensing element location. Each controller display shall be read, and the thermometer and controller-display readings logged. The calibration accuracy of the sensing

element-to-controller readout for space temperature shall be checked.

c. Step 3 - Actuator Range Adjustments: A signal shall be applied to the actuator, using the controller "MANUAL/AUTO" station in "MANUAL." The proper operation of the actuators and positioners for all dampers and valves shall be verified. The signal shall be varied from live zero of 4 ma [or 21 kPa] to 20 ma [or 103 kPa], and it shall be verified that the actuators travel from zero stroke to full stroke within the signal range. It shall be verified that all sequenced and parallel-operated actuators move from zero stroke to full stroke in the proper direction, and move the connected device in the proper direction from one extreme position to the other.

d. Step 4 - Control-System Commissioning:

(1) With the fan ready to start, the ventilation-delay-mode signal shall be applied, and it shall be verified that the ventilation-delay-mode pilot light turns on. The occupied-mode signal shall be applied and it shall be verified that the occupied-mode pilot light turns on and that supply fan [_____] starts. It shall be verified that the outside-air and relief-air dampers are closed, the return-air damper is open, and the heating-coil valve is under control, by slightly changing the controller outputs. The ventilation-delay-mode signal shall be released, and it shall be verified that the ventilation-delay-mode pilot light turns off and that the outside-air, return-air, and relief-air dampers come under control by changing the controller output.

(2) The minimum-outside-air-mode signal shall be applied. It shall be verified that the outside-air damper opens to minimum position and the economizer pilot light is off.

(3) The space-temperature controller "MANUAL/AUTO" station shall be indexed to the "MANUAL" position, and the calibration accuracy check for sensing element-to-controller readout shall be performed. The controller shall be placed in the remote-setpoint mode. The setpoint low-end limit shall be set to 19 degrees C and the high-end limit shall be set to 22 degrees C. Proper operation of the temperature setpoint device at the space temperature sensing element and transmitter location shall be verified. The controller "MANUAL/AUTO" station shall be indexed to the "AUTO" position and the controller-tuning procedure shall be performed. The temperature setpoint device shall be set to the space temperature setpoint as shown.

(4) An unoccupied-mode signal shall be applied, and it shall be verified that the occupied-mode pilot light turns off, the HVAC system shuts down, and the control system assumes the specified shutdown conditions. The night-thermostat temperature setting shall be turned upward, and it shall be verified that the HVAC system starts; the setting shall be turned downward, and it shall be verified that the HVAC system stops. The night thermostat shall be set at the setpoint as shown.

(5) With the HVAC system running, a filter differential-pressure switch input signal shall be simulated, at the device. It shall

be verified that the filter pilot light turns on, and that contact output at EMCS terminals is made. The differential-pressure switch shall be set at the setpoint as shown.

(6) With the HVAC system running, a freezestat trip input signal shall be simulated, at the device. HVAC system shutdown shall be observed. It shall be verified that the low-temperature pilot light turns on and that contact output at the EMCS terminals is made. The freezestat shall be set at the setpoint as shown. The HVAC shall be restarted by manual restart, and it shall be verified that the pilot light turns off.

(7) With the HVAC system running, a smoke-detector trip input signal shall be simulated at each detector, and verification of control-device actions and interlock functions as described in paragraph CONTROL SEQUENCES OF OPERATION shall be made. Simulation shall be performed without false-alarming any Life Safety systems. It shall be verified that the HVAC system shuts down and that the smoke-detector pilot light turns on, and contact output at EMCS terminals shall be verified. The detectors shall be reset. The HVAC system shall be restarted by manual reset, and it shall be verified that the pilot light turns off.

3.4.14 Multizone Control System with Return Fan

Steps for installation shall be as follows:

a. Step 1 - System Inspection: The HVAC system shall be observed in its shutdown condition. Power and main air shall be available at the HVAC system control panel. The outside-air and relief-air dampers shall be closed, the return-air damper open, and the cooling-coil valve closed.

b. Step 2 - Calibration Accuracy Check with HVAC System Shutdown: Readings shall be taken with a digital thermometer at each temperature-sensing element location. Each controller display shall be read, and the thermometer and controller-display readings logged. The calibration accuracy of the sensing element-to-controller readout for outside-air, return-air, mixed-air, cold-deck-air, and hot-deck-air temperatures shall be checked.

c. Step 3 - Actuator Range Adjustments: A signal shall be applied to the actuator, using the controller "MANUAL/AUTO" station in "MANUAL." The proper operation of the actuators and positioners for all dampers and valves shall be verified. The signal shall be varied from live zero of 4 ma [or 21 kPa] to 20 ma [or 103 kPa], and it shall be verified that the actuators travel from zero stroke to full stroke within the signal range. It shall be verified that all sequenced and parallel-operated actuators move from zero stroke to full stroke in the proper direction, and move the connected device in the proper direction from one extreme position to the other.

d. Step 4 - Control-System Commissioning:

(1) With the fans ready to start, the ventilation-delay-mode signal shall be applied, and it shall be verified that the ventilation-delay-mode pilot light turns on. The occupied-mode

signal shall be applied, and it shall be verified that the occupied-mode pilot light turns on and that supply fan [_____] and return fan [_____] start. It shall be verified that the outside-air and relief-air dampers are closed, the return-air damper is open, and the heating and cooling-coil valves are under control, by slightly changing the controller outputs. The ventilation-delay-mode signal shall be released, and it shall be verified that the ventilation-delay-mode pilot light turns off, and that the outside-air, return-air, and relief-air dampers come under control, by changing the controller output.

(2) The minimum-outside-air-mode signal shall be applied. It shall be verified that the outside-air damper opens to minimum position [and that the economizer pilot light is off].

(3) The mixed-air temperature controller "MANUAL/AUTO" station shall be indexed to the "MANUAL" position. An economizer-mode input signal shall be simulated and it shall be verified that the economizer-mode pilot light turns on. The mixed-air temperature controller output shall be changed to slightly open the outside-air damper and the second point of the two-point calibration accuracy check of sensing element-to-controller readout for outside-air, return-air, and mixed-air temperatures shall be performed. The controller-tuning procedure shall be performed. The mixed-air temperature controller "MANUAL/AUTO" switch shall be indexed to the "AUTO" position. The mixed-air temperature controller shall be placed in the local setpoint mode and set at the temperature setpoint as shown.

(4) The outside-air temperature controller "MANUAL/AUTO" station shall be indexed to the "MANUAL" position and the two-point calibration sensing element-to-controller readout accuracy check for the outside-air temperature shall be performed. The controller proportional band adjustment, the setpoint, the manual reset, and the maximum controller output shall be set to achieve the outside-air temperature schedule as shown.

(5) The hot-deck temperature controller "MANUAL/AUTO" station shall be indexed to the "MANUAL" position, and the two-point calibration accuracy check of sensing element-to-controller readout for outside-air and hot-deck temperatures shall be performed. The controller shall be placed in the remote-setpoint mode. The remote setpoint shall be set for [_____] degrees C at 20-ma input and [_____] degrees C at 4-ma input. Send a 12-ma signal to the remote setpoint for tuning at midrange. The controller "MANUAL/AUTO" station shall be indexed to the "AUTO" position, and the controller-tuning procedure performed. Three signals shall be applied simulating outside-air temperature changes. The signals shall be selected at midrange, lower 1/3 range, and upper 1/3 range of the temperature schedule. It shall be verified that the hot-deck temperature controller setpoint tracks the schedule. The hot-deck temperature controller setpoint shall be set for the existing outside-air temperature as shown.

(6) The hot-deck temperature controller "MANUAL/AUTO" station shall be indexed to the "MANUAL" position, and the two-point calibration accuracy check of sensing element-to-controller readout shall be performed. The controller shall be placed in the local-setpoint mode, and set at the temperature setpoint as shown.

The controller "MANUAL/AUTO" station shall be indexed to the "AUTO" position, and the controller-tuning procedure performed.

(7) The cold-deck temperature controller "MANUAL/AUTO" station shall be indexed to the "MANUAL" position, and the calibration accuracy check of sensing element-to-controller readout shall be performed. The controller shall be placed in the local-setpoint mode, and set at the temperature setpoint as shown. The controller "MANUAL/AUTO" station shall be indexed to the "AUTO" position, and the controller-tuning procedure performed.

(8) An unoccupied-mode signal shall be applied, and it shall be verified that the occupied-mode pilot light turns off, the HVAC system shuts down, and the control system assumes the specified shutdown conditions. The night-thermostat temperature setting shall be turned upward, and it shall be verified that the HVAC system starts; the setting shall be turned downward, and it shall be verified that the HVAC system stops. The night thermostat shall be set at the setting as shown.

(9) With the HVAC system running, a filter differential-pressure switch input signal shall be simulated at the device. It shall be verified that the filter pilot light turns on, and that contact output at the EMCS terminals is made. The differential-pressure switch shall be set at the setpoint as shown.

(10) With the HVAC system running, a freezestat trip input signal shall be simulated at the device. HVAC system shutdown shall be observed. It shall be verified that the low-temperature pilot light turns on, and that contact output at the EMCS terminals is made. The freezestat shall be set at the setpoint as shown. The HVAC system shall be restarted by manual restart, and it shall be verified that the pilot light turns off.

(11) With the HVAC system running, a smoke-detector trip input signal shall be simulated at each detector, and control-device actions and interlock functions, as described in paragraph CONTROL SEQUENCES OF OPERATION, shall be verified. Simulation shall be performed without false-alarming any Life Safety systems. It shall be verified that the HVAC system shuts down and that the smoke-detector pilot light turns on, and contact output at the EMCS terminals is made. The detectors shall be reset. The HVAC system shall be restarted by manual restart, and it shall be verified that the pilot light turns off.

(12) The setpoint of each zone thermostat shall be raised and it shall be verified that the zone damper closes to the cold deck and opens to the hot deck. The thermostat of each zone shall be calibrated and set at its setpoint as shown.

3.4.15 Dual-Duct Multizone Control System with Return Fan

Steps for installation shall be as follows:

a. Step 1 - System Inspection: The HVAC system shall be observed in its shutdown condition. Power and main air shall be available at the HVAC system control panel. The outside-air and relief-air dampers shall be closed, the return-air damper open, and the cooling-coil valve closed.

b. Step 2 - Calibration Accuracy Check with HVAC System Shutdown: Readings shall be taken with a digital thermometer at each temperature-sensing element location. Each controller display shall be read, and the thermometer and controller-display readings logged. The calibration accuracy of the sensing element-to-controller readout for outside-air, return-air, mixed-air, cold-duct-air, and hot-duct-air temperatures shall be checked.

c. Step 3 - Actuator Range Adjustments: A signal shall be applied to the actuator, using the controller "MANUAL/AUTO" station in "MANUAL." The proper operation of the actuators and positioners for all dampers and valves shall be verified. The signal shall be varied from live zero of 4 ma [or 21 kPa] to 20 ma [or 103 kPa], and it shall be verified that the actuators travel from zero stroke to full stroke within the signal range. It shall be verified that all sequenced and parallel-operated actuators move from zero stroke to full stroke in the proper direction, and move the connected device in the proper direction from one extreme position to the other.

d. Step 4 - Control-System Commissioning:

(1) With the fans ready to start, the ventilation delay mode signal shall be applied, and it shall be verified that the ventilation-delay-mode pilot light turns on. The occupied-mode signal shall be applied, and it shall be verified that the occupied-mode pilot light turns on and that supply fan [_____] and return fan [_____] start. It shall be verified that the outside-air and relief-air dampers are closed, the return-air damper is open, and the heating and cooling-coil valves are under control, by slightly changing the controller outputs. The ventilation-delay-mode signal shall be released, and it shall be verified that the ventilation-delay-mode pilot light turns off and the outside-air, return-air, and relief-air dampers come under control by changing the controller output.

(2) The minimum-outside-air-mode signal shall be applied. It shall be verified that the outside-air damper opens to minimum position [and that the economizer pilot light is off].

(3) The mixed-air temperature controller "MANUAL/AUTO" station shall be indexed to the "MANUAL" position. An economizer-mode input signal shall be simulated and it shall be verified that the economizer-mode pilot light turns on. The mixed-air temperature controller output shall be changed to slightly open the outside-air damper and the second point of the two-point calibration accuracy check of sensing element-to-controller readout for outside-air, return-air, and mixed-air temperatures shall be performed. The controller-tuning procedure shall be performed. The mixed-air temperature controller "MANUAL/AUTO" switch shall be indexed to the "AUTO" position. The mixed-air temperature controller shall be placed in the local setpoint mode and set at the temperature setpoint as shown.

(4) The outside-air temperature controller "MANUAL/AUTO" station shall be indexed to the "MANUAL" position and the two-point calibration sensing element-to-controller readout accuracy check

for the outside-air temperature shall be performed. The controller proportional band adjustment, the setpoint, the manual reset, and the maximum controller output shall be set to achieve the outside-air temperature schedule as shown.

(5) The hot-deck temperature controller "MANUAL/AUTO" station shall be indexed to the "MANUAL" position, and the two-point calibration accuracy check of sensing element-to-controller readout for outside-air and hot-deck temperatures shall be performed. The controller shall be placed in the remote-setpoint mode. The remote setpoint shall be set for [_____] degrees C at 20-ma input and [_____] degrees C at 4-ma input. Send a 12-ma signal to the remote setpoint for tuning at midrange. The controller "MANUAL/AUTO" station shall be indexed to the "AUTO" position, and the controller-tuning procedure performed. Three signals shall be applied simulating outside-air temperature changes. The signals shall be selected at midrange, lower 1/3 range, and upper 1/3 range of the temperature schedule. It shall be verified that the hot-deck temperature controller setpoint tracks the schedule. The hot-deck temperature controller setpoint shall be set for the existing outside-air temperature as shown.

(6) The hot-deck temperature controller "MANUAL/AUTO" station shall be indexed to the "MANUAL" position, and the two-point calibration accuracy check of sensing element-to-controller readout shall be performed. The controller shall be placed in the local-setpoint mode, and set at the temperature setpoint as shown. The controller "MANUAL/AUTO" station shall be indexed to the "AUTO" position, and the controller-tuning procedure performed.

(7) The cold-deck temperature controller "MANUAL/AUTO" station shall be indexed to the "MANUAL" position, and the calibration accuracy check of sensing element-to-controller readout shall be performed. The controller shall be placed in the local-setpoint mode, and set at the temperature setpoint as shown. The controller "MANUAL/AUTO" station shall be indexed to the "AUTO" position, and the controller-tuning procedure performed.

(8) An unoccupied-mode signal shall be applied, and it shall be verified that the occupied-mode pilot light turns off, the HVAC system shuts down, and the control system assumes the specified shutdown conditions. The night-thermostat temperature setting shall be turned upward, and it shall be verified that the HVAC system starts; the setting shall be turned downward, and it shall be verified that the HVAC system stops. The night thermostat shall be set at the setting as shown.

(9) With the HVAC system running, a filter differential-pressure switch input signal shall be simulated at the device. It shall be verified that the filter pilot light turns on, and that contact output at the EMCS terminals is made. The differential-pressure switch shall be set at the setpoint as shown.

(10) With the HVAC system running, a freezestat trip input signal shall be simulated at the device. HVAC system shutdown shall be verified. It shall be verified that the low-temperature pilot light turns on, and contact output at EMCS terminals shall be verified. The freezestat shall be set at the setpoint as shown. The HVAC system shall be restarted by manual restart, and it shall

be verified that the pilot light turns off.

(11) With the HVAC system running, a smoke-detector trip input signal shall be simulated at each detector, and control-device actions and interlock functions, as described in paragraph CONTROL SEQUENCES OF OPERATION, shall be verified. Simulation shall be performed without false-alarming any Life Safety systems. It shall be verified that the HVAC system shuts down and that the smoke-detector pilot light turns on, and contact output at the EMCS terminals is made. The detectors shall be reset. The HVAC system shall be restarted by manual restart, and it shall be verified that the pilot light turns off.

(12) The setpoint of each zone thermostat shall be raised and it shall be verified that the dual-duct terminal box damper closes to the cold duct and opens to the hot duct. Each zone thermostat shall be calibrated and set at its setpoint as shown.

3.4.16 Bypass Multizone with Return Fan

Steps for installation shall be as follows:

a. Step 1 - System Inspection: The HVAC system shall be observed in its shutdown condition. Power and main air shall be available at the HVAC system control panel. The outside-air and relief-air dampers shall be closed, the return-air damper open, and the cooling-coil valve closed.

b. Step 2 - Calibration Accuracy Check with HVAC System Shutdown: Readings shall be taken with a digital thermometer at each temperature-sensing element location. Each controller display shall be read, and the thermometer and controller-display readings logged. The calibration accuracy of the sensing element-to-controller readout for outside-air, return-air, mixed-air, and cold-deck-air temperatures shall be checked.

c. Step 3 - Actuator Range Adjustments: A signal shall be applied to the actuator, using the controller "MANUAL/AUTO" station in "MANUAL." The proper operation of the actuators and positioners for all dampers and valves shall be verified. The signal shall be varied from live zero of 4 ma [or 21 kPa] to 20 ma [or 103 kPa], and it shall be verified that the actuators travel from zero stroke to full stroke within the signal range. It shall be verified that all sequenced and parallel-operated actuators move from zero stroke to full stroke in the proper direction, and move the connected device in the proper direction from one extreme position to the other.

d. Step 4 - Control-System Commissioning:

(1) With the fans ready to start, the ventilation-delay-mode signal shall be applied, and it shall be verified that the ventilation-delay-mode pilot light turns on. The occupied-mode signal shall be applied, and it shall be verified that the occupied-mode pilot light turns on and that supply fan [_____] and return fan [_____] start. It shall be verified that the outside-air and relief-air dampers are closed, the return-air damper is open, and the heating and cooling-coil valves are under control, by slightly changing the controller outputs. The

ventilation-delay-mode signal shall be released, and it shall be verified that the ventilation-delay-mode pilot light turns off, and that the outside-air, return-air, and relief-air dampers come under control, by changing the controller output.

(2) The minimum-outside-air-mode signal shall be applied. It shall be verified that the outside-air damper opens to minimum position and that the economizer pilot light is off.

(3) The mixed-air temperature controller "MANUAL/AUTO" station shall be indexed to the "MANUAL" position. An economizer-mode input signal shall be simulated and it shall be verified that the economizer-mode pilot light turns on. The mixed-air temperature controller output shall be changed to slightly open the outside-air damper and the second point of the two-point calibration accuracy check of sensing element-to-controller readout for outside-air, return-air, and mixed-air temperatures shall be performed. The controller-tuning procedure shall be performed. The mixed-air temperature controller "MANUAL/AUTO" switch shall be indexed to the "AUTO" position. The mixed-air temperature controller shall be placed in the local setpoint mode and set at the temperature setpoint as shown.

(4) The cold-deck temperature controller "MANUAL/AUTO" station shall be indexed to the "MANUAL" position, and the calibration accuracy check of sensing element-to-controller readout shall be performed. The controller shall be placed in the local-setpoint mode, and set at the temperature setpoint as shown. The controller "MANUAL/AUTO" station shall be indexed to the "AUTO" position, and the controller-tuning procedure performed.

(5) An unoccupied-mode signal shall be applied, and it shall be verified that the occupied-mode pilot light turns off, the HVAC system shuts down, and the control system assumes the specified shutdown conditions. The night-thermostat temperature setting shall be turned upward, and it shall be verified that the HVAC system starts; the setting shall be turned downward, and it shall be verified that the HVAC system stops. The night thermostat shall be set at the setpoint as shown.

(6) With the HVAC system running, a filter differential-pressure switch input signal shall be simulated at the device. It shall be verified that the filter pilot light turns on, and that contact output at the EMCS terminals is made. The differential-pressure switch shall be set at the setpoint as shown.

(7) With the HVAC system running, a freezestat trip input signal shall be simulated at the device. HVAC system shutdown shall be observed. It shall be verified that the low-temperature pilot light turns on, and that contact output at the EMCS terminals is made. The freezestat shall be set at the setpoint as shown. The HVAC system shall be restarted by manual restart and it shall be verified that the pilot light turns off.

(8) With the HVAC system running, a smoke-detector trip input signal shall be simulated at each detector, and control-device actions and interlock functions as described in paragraph CONTROL SEQUENCES OF OPERATION shall be verified. Simulation shall be performed without false-alarming any Life Safety systems. It

shall be verified that the HVAC system shuts down and that the smoke-detector pilot light turns on, and contact output at the EMCS terminals is made. The detectors shall be reset. The HVAC system shall be restarted by manual restart, and it shall be verified that the pilot light turns off.

(9) The setpoint of each zone thermostat shall be changed and correct operation of the zone damper and the heating coil valve shall be verified for each zone. Each zone thermostat shall be calibrated and set at its setpoint as shown.

3.4.17 Variable-Air-Volume, Without Return Fan

Steps for installation shall be as follows:

a. Step 1 - System Inspection: The HVAC system shall be observed in its shutdown condition. Power and main air shall be available at the HVAC system control panel. The outside-air and relief-air dampers shall be closed, the return-air damper open, and the supply-fan inlet vanes and cooling-coil valve shall be closed.

b. Step 2 - Calibration Accuracy Check with HVAC System in Shutdown: Readings shall be taken with a digital thermometer at each temperature-sensing element location. Each controller display shall be read, and the thermometer and controller-display readings logged. The calibration accuracy of the sensing element-to-controller readout for outside-air, return-air, mixed-air, and the cooling-coil discharge air temperatures shall be checked.

c. Step 3 - Actuator Range Adjustments: A signal shall be applied to the actuator, using the controller "MANUAL/AUTO" station in "MANUAL." The proper operation of the actuators and positioners for all dampers and valves shall be verified. The signal shall be varied from live zero of 4 ma [or 21 kPa] to 20 ma [or 103 kPa], and it shall be verified that the actuators travel from zero stroke to full stroke within the signal range. It shall be verified that all sequenced and parallel-operated actuators move from zero stroke to full stroke in the proper direction, and move the connected device in the proper direction from one extreme position to the other.

d. Step 4 - Control-System Commissioning:

(1) With the fan ready to start, the ventilation-delay-mode signal shall be applied, and it shall be verified that the ventilation-delay mode pilot light turns on. The occupied-mode signal shall be applied, and it shall be verified that the occupied-mode pilot light turns on and that supply fan [_____] starts. It shall be verified that the outside-air and relief-air dampers are closed, the return-air damper is open, and the cooling-coil valve and inlet vanes are under control, by slightly changing the controller output. The ventilation-delay-mode signal shall be released, and it shall be verified that the ventilation-delay-mode pilot light turns off and that the outside-air, return-air, and relief-air dampers come under control, by changing the controller output.

(2) The minimum-outside-air-mode signal shall be applied. It

shall be verified that the outside-air damper opens to minimum position and that the economizer pilot light is off.

(3) With supply fan [_____] running, a high static-pressure input signal shall be simulated at the device, by pressure input to the differential-pressure switch sensing device. HVAC system shutdown shall be observed. It shall be verified that the high-static-pressure pilot light turns on, and that contact output at the EMCS terminals is made. The differential-pressure switch shall be set at the setpoint as shown. The HVAC system shall be restarted by manual restart, and it shall be verified that the high-static-pressure pilot light turns off.

(4) The supply-fan static-pressure controller "MANUAL/AUTO" station shall be indexed to the "MANUAL" position, and the two-point calibration accuracy check for sensing element-to-controller readout shall be performed. The controller shall be placed in the local setpoint mode. The controller "MANUAL/AUTO" station shall be indexed to the "AUTO" position, and the controller-tuning procedure performed. The controller shall be set at the static-pressure setpoint as shown, and the mode-constants logged.

(5) The mixed-air temperature controller "MANUAL/AUTO" station shall be indexed to the "MANUAL" position. An economizer-mode input signal shall be simulated and it shall be verified that the economizer-mode pilot light turns on. The mixed-air temperature controller output shall be changed to slightly open the outside-air damper and the second point of the two-point calibration accuracy check of sensing element-to-controller readout for outside-air, return-air, and mixed-air temperatures shall be performed. The controller-tuning procedure shall be performed. The mixed-air temperature controller "MANUAL/AUTO" switch shall be indexed to the "AUTO" position. The mixed-air temperature controller shall be placed in the local setpoint mode and set at the temperature setpoint as shown.

(6) The cooling coil temperature controller "MANUAL/AUTO" station shall be indexed to the "MANUAL" position, and the calibration accuracy check of sensing element-to-controller readout shall be performed. The controller shall be placed in the local-setpoint mode, and set at the temperature setpoint as shown. The controller "MANUAL/AUTO" station shall be indexed to the "AUTO" position, and the controller-tuning procedure performed.

(7) An unoccupied-mode signal shall be applied, and it shall be verified that the occupied-mode pilot light turns off, the HVAC system shuts down, and the control system assumes the specified shutdown conditions. The night-thermostat temperature setting shall be turned upward, and it shall be verified that the HVAC system starts; the setting shall be turned downward, and it shall be verified that the HVAC system stops. The night thermostat shall be set at the setpoint as shown.

(8) With the HVAC system running, a filter differential-pressure-switch input signal shall be simulated at the device. It shall be verified that the filter pilot light turns on, and that contact output at the EMCS terminals is made. The differential-pressure switch shall be set at the setpoint as shown.

(9) With the HVAC system running, a freezestat trip input signal shall be simulated at the device. HVAC system shutdown shall be observed. It shall be verified that the low-temperature pilot light turns on, and that contact output at the EMCS terminals is made. The freezestat shall be set at the setpoint as shown. The HVAC system shall be restarted by manual restart, and it shall be verified that the pilot light turns off.

(10) With the HVAC system running, a smoke-detector trip input signal shall be simulated at each detector, and control-device actions and interlock functions, as described in paragraph CONTROL SEQUENCES OF OPERATION shall be verified. Simulation shall be performed without false-alarming any Life Safety systems. It shall be verified that the HVAC system shuts down and that the smoke-detector pilot light turns on, and contact output at the EMCS terminals is made. The detectors shall be reset. The HVAC system shall be restarted by manual restart, and it shall be verified that the pilot light turns off.

(11) Velocity setpoints for minimum and maximum flow and temperature setpoints for the heating/cooling dead band shall be set, for each VAV terminal unit. The actions of the controller, the operation of the damper, and the operation of heating shall be verified. It shall be verified that space temperature is maintained.

3.4.18 Variable-Air-Volume Control

System with Return Fan Steps for installation shall be as follows:

a. Step 1 - System Inspection: The HVAC system shall be observed in its shutdown condition. Power and main air shall be available at the HVAC system control panel. The outside-air and relief-air dampers shall be closed, the return-air damper open, and the inlet vanes and cooling-coil valve shall be closed.

b. Step 2 - Calibration Accuracy Check with HVAC System Shutdown: Readings shall be taken with a digital thermometer at each temperature sensing element location. Each controller display shall be read, and the thermometer and controller-display readings logged. The calibration accuracy of the sensing element-to-controller readout for outside-air, return-air, mixed-air, and cooling-coil discharge-air temperatures shall be checked. The supply-airflow and return-airflow shall be read, using a digital indicating velometer, and the velometer and controller-display readings logged. The flows shall read zero.

c. Step 3 - Actuator Range Adjustments: A signal shall be applied to the actuator, using the controller "MANUAL/AUTO" station in "MANUAL." The proper operation of the actuators and positioners for all dampers and valves shall be verified. The signal shall be varied from live zero of 4 ma [or 21 kPa] to 20 ma [or 103 kPa], and it shall be verified that the actuators travel from zero stroke to full stroke within the signal range. It shall be verified that all sequenced and parallel-operated actuators move from zero stroke to full stroke in the proper direction, and move the connected device in the proper direction from one extreme position to the other.

d. Step 4 - Control-System Commissioning:

(1) With the fans ready to start, the ventilation-delay-mode signal shall be applied, and it shall be verified that the ventilation-delay mode pilot light turns on. The occupied-mode signal shall be applied, and it shall be verified that the occupied-mode pilot light turns on and that supply fan [_____] and return fan [_____] start. It shall be verified that the outside-air and relief-air dampers are closed, the return-air damper is open, and the cooling-coil valve and inlet vanes are under control, by slightly changing the controller output. The ventilation-delay-mode signal shall be released, and it shall be verified that the ventilation-delay-mode pilot light turns off and that the outside-air, return-air and relief-air dampers come under control by changing the controller output.

(2) The minimum-outside-air-mode signal shall be applied. It shall be verified that the outside-air damper opens to minimum position and that the economizer pilot light is off.

(3) With supply fan [_____] running, a high-static-pressure input signal shall be simulated at the device, by pressure input to the differential-pressure switch sensing device. HVAC system shutdown shall be observed. It shall be verified that the high-static pilot light turns on, and that contact output at the EMCS terminals is made. The differential-pressure switch shall be set at the setpoint as shown. The HVAC system shall be restarted by manual restart, and it shall be verified that the high-static-pressure pilot light turns off.

(4) The supply-fan static-pressure controller "MANUAL/AUTO" station shall be indexed to the "MANUAL" position, and the two-point calibration accuracy check for sensing element-to-controller readout shall be performed. The controller shall be placed in the local setpoint mode. The controller "MANUAL/AUTO" station shall be indexed to the "AUTO" position, and the controller-tuning procedure performed. The controller shall be set at the static-pressure setpoint, and the mode-constants logged.

(5) Each VAV terminal unit controller's minimum-flow and maximum-flow setpoints shall be set at the same setting. This will prevent the VAV-box damper from modulating under space-temperature control and will achieve a constant supply-duct-system pressure drop. The return-fan inlet vane shall be placed under control, and the starter switch shall be turned to the "AUTO" position so that the fan starts. The "MANUAL/AUTO" station of the return-fan air-volume controller shall be indexed to the "MANUAL" position, and the two-point calibration accuracy check of sensing element-to-controller readout shall be performed. The controller shall be placed in the remote-setpoint mode. Using the supply-duct static-pressure controller's "MANUAL" function, operate the supply-fan inlet vane to change the supply-fan flow, and the controller ratio and bias settings shall be set to control at [_____] L/s at 4-ma input and [_____] L/s at 20-ma input. The supply-fan flow shall be changed to verify that the return-flow setpoint tracks the supply-fan flow with the proper flow difference. A 12-ma signal shall be sent for tuning

at setpoint midrange. The controller "MANUAL/AUTO" station shall be indexed to the "AUTO" position and the controller tuning procedure shall be performed. A 4-ma, 12-ma and 20-ma signals shall be sent to the remote setpoint input, and it shall be verified that the return fan goes from minimum-delivery setpoint to midrange delivery setpoint, and then to maximum-delivery setpoint. The supply-duct static-pressure controller shall be placed in "AUTO."

(6) The mixed-air temperature controller "MANUAL/AUTO" station shall be indexed to the "MANUAL" position. An economizer-mode input signal shall be simulated and it shall be verified that the economizer-mode pilot light turns on. The mixed-air temperature controller output shall be changed to slightly open the outside-air damper and the second point of the two-point calibration accuracy check of sensing element-to-controller readout for outside-air, return-air, and mixed-air temperatures shall be performed. The controller-tuning procedure shall be performed. The mixed-air temperature controller "MANUAL/AUTO" switch shall be indexed to the "AUTO" position. The mixed-air temperature controller shall be placed in the local setpoint mode and set at the temperature setpoint as shown.

(7) The cooling coil temperature controller "MANUAL/AUTO" station shall be indexed to the "MANUAL" position, and the calibration accuracy check of sensing element-to-controller readout shall be performed. The controller shall be placed in the local-setpoint mode, and set at the temperature setpoint as shown. The controller "MANUAL/AUTO" station shall be indexed to the "AUTO" position, and the controller-tuning procedure performed.

(8) An unoccupied-mode signal shall be applied, and it shall be verified that the occupied-mode pilot light turns off, the HVAC system shuts down, and the control system assumes the specified shutdown conditions. The night-thermostat temperature setting shall be turned upward, and it shall be verified that the HVAC system starts; the setting shall be turned downward, and it shall be verified that the HVAC system stops. The night thermostat shall be set at the setpoint as shown.

(9) With the HVAC system running, a filter differential-pressure switch input signal shall be simulated at the device. It shall be verified that the filter pilot light turns on, and that contact output at the EMCS terminals is made. The differential-pressure switch shall be set at the setpoint as shown.

(10) With the HVAC system running, a freezestat trip input signal shall be simulated at the device. HVAC system shall shut down, and contact output at EMCS terminals shall be verified. It shall be verified that the low-temperature pilot light turns on. The freezestat shall be set at the setpoint as shown. The HVAC system shall be restarted by manual restart, and it shall be verified that the pilot light turns off.

(11) With the HVAC system running, a smoke-detector trip input signal shall be simulated at each detector and control-device actions and interlock functions, as described in paragraph CONTROL SEQUENCES OF OPERATION shall be verified. Simulation shall be performed without false-alarming any Life Safety systems. It

shall be verified that the HVAC system shuts down, that the smoke-detector pilot light turns on, and that contact output at the EMCS terminals is made. The detectors shall be reset. The HVAC system shall be restarted by manual restart, and it shall be verified that the pilot light turns off.

(12) For each VAV terminal unit, velocity setpoints shall be set for minimum and maximum flow, and temperature setpoints shall be set for the heating/cooling dead band. The actions of the controller, the operation of the damper, and the operation of heating shall be verified. It shall be verified that space temperature is maintained.

3.4.19 Single-Zone with Hydronic Heating and Cooling Coils; No Return Fan

Steps for installation shall be as follows:

a. Step 1 - System Inspection: The HVAC system shall be verified in its shutdown condition. Power and main air shall be available at the HVAC system control panel. The outside-air and relief-air dampers shall be closed, the return-air damper shall be open, and the cooling-coil valve shall be closed.

b. Step 2 - Calibration Accuracy Check with HVAC System Shutdown: Readings shall be taken with a digital thermometer at each temperature-sensing element location. Each controller display shall be read, and the thermometer and controller-display readings logged. The calibration accuracy of the sensing element-to-controller readout for outside-air, return-air, and space temperatures shall be checked.

c. Step 3 - Actuator Range Adjustments: A signal shall be applied to the actuator, using the controller "MANUAL/AUTO" station in "MANUAL." The proper operation of the actuators and positioners for all dampers and valves shall be verified. The signal shall be varied from live zero of 4 ma [or 21 kPa] to 20 ma [or 103 kPa], and it shall be verified that the actuators travel from zero stroke to full stroke within the signal range. It shall be verified that all sequenced and parallel-operated actuators move from zero stroke to full stroke in the proper direction, and move the connected device in the proper direction from one extreme position to the other.

d. Step 4 - Control-System Commissioning:

(1) With the fan ready to start, the ventilation-delay-mode signal shall be applied, and it shall be verified that the ventilation-delay-mode pilot light turns on. The occupied-mode signal shall be applied, and it shall be verified that the occupied-mode pilot light turns on and that supply fan [_____] starts. It shall be verified that the outside-air and relief-air dampers are closed, the return-air damper is open, and the heating-coil and cooling-coil valves are under control, by slightly changing the controller outputs. The ventilation-delay-mode signal shall be released, and it shall be verified that the ventilation-delay-mode pilot light turns off and that the outside-air, return-air, and relief-air dampers come under control by changing the controller output.

(2) The minimum-outside-air-mode signal shall be applied. It shall be verified that the outside-air damper opens to minimum position and the economizer pilot light is off.

(3) The space-temperature controller "MANUAL/AUTO" station shall be indexed to the "MANUAL" position. An economizer-mode input signal shall be simulated and it shall be verified that the economizer-mode pilot light turns on. The space-temperature controller output shall be changed and the second point of the two-point calibration accuracy check of sensing element-to-controller readout for outside-air, return-air, and space temperatures shall be performed. The controller shall be placed in the remote-setpoint mode. The setpoint low-end limit shall be set to 19 degrees C and the high-end limit shall be set to 22 degrees C. Proper operation of the temperature setpoint device at the space-temperature sensing element and transmitter location shall be verified. The space-temperature controller tuning procedure shall be performed. The controller "MANUAL/AUTO" station shall be indexed to the "AUTO" position and the temperature setpoint device shall be set to the space temperature setpoint as shown. A change in space temperature shall be simulated and it shall be verified that the heating-coil valve and the cooling-coil valve operate in sequence as shown.

(4) An unoccupied-mode signal shall be applied, and it shall be verified that the occupied-mode pilot light turns off, the HVAC system shuts down, and the control system assumes the specified shutdown conditions. The night-thermostat temperature setting shall be turned upward, and it shall be verified that the HVAC system starts; the setting shall be turned downward, and it shall be verified that the HVAC system stops. The night thermostat shall be set at the setpoint as shown.

(5) With the HVAC system running, a filter differential-pressure switch input signal shall be simulated at the device. It shall be verified that the filter pilot light turns on, and that contact output at the EMCS terminals is made. The differential-pressure switch shall be set at the setpoint as shown.

(6) With the HVAC system running, a freezestat trip input signal shall be simulated at the device. HVAC system shutdown shall be verified, the low-temperature pilot light shall turn on, and contact output at the EMCS terminals shall be verified. The freezestat shall be set at the setpoint as shown. The HVAC system shall be restarted by manual restart, and it shall be verified that the pilot light turns off.

(7) With the HVAC system running, a smoke-detector trip input signal shall be simulated at each detector, and control-device actions and interlock functions, as described in paragraph CONTROL SEQUENCES OF OPERATION shall be verified. Simulation shall be performed without false-alarming any Life Safety systems. It shall be verified that the HVAC system shuts down and that the smoke-detector pilot light turns on, and contact output at the EMCS terminals is made. The detectors shall be reset. The HVAC system shall be restarted by manual restart, and it shall be verified that the pilot light turns off.

3.4.20 Single-Zone with Dual-Temperature Coil; No Return Fan

Steps for installation shall be as follows:

a. Step 1 - System Inspection: The HVAC system shall be verified in its shutdown condition. Power and main air shall be available at the HVAC system control panel. The outside-air and relief-air dampers shall be closed, the return-air damper shall be open, and the cooling-coil valve shall be closed.

b. Step 2 - Calibration Accuracy Check with HVAC System Shutdown: Readings shall be taken with a digital thermometer at each temperature-sensing element location. Each controller display shall be read, and the thermometer and controller-display readings logged. The calibration accuracy of the sensing element-to-controller readout for outside-air, return-air, and space temperatures shall be checked.

c. Step 3 - Actuator Range Adjustments: A signal shall be applied to the actuator, using the controller MANUAL/AUTO" station in "MANUAL." The proper operation of the actuators and positioners for all dampers and valves shall be verified. The signal shall be varied from live zero of 4 ma [or 21 kPa] to 20 ma [or 103 kPa], and it shall be verified that the actuators travel from zero stroke to full stroke within the signal range. It shall be verified that all sequenced and parallel-operated actuators move from zero stroke to full stroke in the proper direction, and move the connected device in the proper direction from one extreme position to the other.

d. Step 4 - Control-System Commissioning:

(1) With the fan ready to start, the ventilation-delay-mode signal shall be applied, and it shall be verified that the ventilation-delay-mode pilot light turns on. The occupied-mode signal shall be applied, and it shall be verified that the occupied-mode pilot light turns on and that supply fan [_____] starts. It shall be verified that the outside-air and relief-air dampers are closed, the return-air damper is open, and the dual-temperature coil control valve is under control, by slightly changing the controller outputs. The ventilation-delay-mode signal shall be released, and it shall be verified that the ventilation-delay-mode pilot light turns off and that the outside-air, return-air, and relief-air dampers come under control by changing the controller output.

(2) The minimum-outside-air-mode signal shall be applied. It shall be verified that the outside-air damper opens to minimum position and the economizer pilot light is off.

(3) The heating-season and cooling-season space-temperature controllers "MANUAL/AUTO" stations shall be indexed to the "MANUAL" position. An economizer-mode input signal shall be simulated and it shall be verified that the economizer-mode pilot light turns on. One space-temperature controller output shall be changed and the second point of the two-point calibration accuracy check of sensing element-to-controller readout for outside-air, return-air, and space temperatures (as indicated at both space-temperature controllers) shall be performed. The controllers shall be placed in the remote-setpoint mode. The

setpoint low-end limit shall be set to 19 degrees C and the high-end limit shall be set to 22 degrees C. Proper operation of the temperature setpoint device at the space-temperature sensing element and transmitter location shall be verified. The tuning procedure shall be performed for the heating-season and cooling-season space-temperature controllers. The controller "MANUAL/AUTO" station for the heating-season and cooling-season space-temperature controllers shall be indexed to the "AUTO" position and the temperature setpoint device shall be set to the space temperature setpoint as shown.

(4) Dual-temperature hydronic changeover operation of aquastat shall be simulated. Control system selection of opposite season space-temperature controller shall be verified.

(5) An unoccupied-mode signal shall be applied, and it shall be verified that the occupied-mode pilot light turns off, the HVAC system shuts down, and the control system assumes the specified shutdown conditions. The night-thermostat temperature setting shall be turned upward, and it shall be verified that the HVAC system starts; the setting shall be turned downward, and it shall be verified that the HVAC system stops. The night thermostat shall be set at the setpoint as shown.

(6) With the HVAC system running, a filter differential-pressure switch input signal shall be simulated at the device. It shall be verified that the filter pilot light turns on, and that contact output at the EMCS terminals is made. The differential-pressure switch shall be set at the setpoint as shown.

(7) With the HVAC system running, a freezestat trip input signal shall be simulated, at the device. HVAC system shutdown shall be verified. The low-temperature pilot light shall turn on; and contact output at EMCS terminals shall be verified. The freezestat shall be set at the setpoint as shown. The HVAC system shall be restarted by manual restart, and it shall be verified that the pilot light turns off.

(8) With the HVAC system running, a smoke-detector trip input signal shall be simulated at each detector, and control-device actions and interlock functions, as described in paragraph CONTROL SEQUENCES OF OPERATION shall be verified. Simulation shall be performed without false-alarming any Life Safety systems. It shall be verified that the HVAC system shuts down and that the smoke-detector pilot light turns on, and contact output at the EMCS terminals is made. The detectors shall be reset. The HVAC system shall be restarted by manual restart, and it shall be verified that the pilot light turns off.

3.4.21 Single-Zone with Humidification; No Return Fan

Steps for installation shall be as follows:

a. Step 1 - System Inspection: The HVAC system shall be verified in its shutdown condition. Power and main air shall be available at the HVAC system control panel. The outside-air damper, humidifier valve and cooling-coil valve shall be closed.

b. Step 2 - Calibration Accuracy Check with HVAC System Shutdown:

Readings shall be taken with a digital thermometer at each temperature sensing element location. Each controller display shall be read, and the thermometer and controller-display readings logged. The calibration accuracy of the sensing element-to-controller readout for outside-air and space temperatures shall be checked. Using a motor-driven psychrometer, the wet-bulb and dry-bulb temperatures of the humidifier discharge air and of the air in the space, shall be checked; the controller display shall be read, and the psychrometer and controller-display readings shall be logged.

c. Step 3 - Actuator Range Adjustments: A signal shall be applied to the actuator, using the controller "MANUAL/AUTO" station in "MANUAL." The proper operation of the actuators and positioners for all dampers and valves shall be verified. The signal shall be varied from live zero of 4 ma [or 21 kPa] to 20 ma [or 103 kPa], and it shall be verified that the actuators travel from zero stroke to full stroke within the signal range. It shall be verified that all sequenced and parallel-operated actuators move from zero stroke to full stroke in the proper direction, and move the connected device in the proper direction from one extreme position to the other.

d. Step 4 - Control-System Commissioning:

(1) With the fan ready to start, the ventilation-delay-mode signal shall be applied, and it shall be verified that the ventilation-delay-mode pilot light turns on. The occupied-mode signal shall be applied, and it shall be verified that the occupied-mode pilot light turns on and that supply fan [_____] starts. It shall be verified that the outside-air damper is closed, and the heating-coil, cooling-coil, and humidifier valves are under control, by slightly changing the controller outputs. The ventilation-delay-mode signal shall be released, and it shall be verified that the ventilation-delay-mode pilot light turns off and that the outside air damper opens.

(2) The outside-air preheat-coil temperature controller "MANUAL/AUTO" station shall be indexed to the "MANUAL" position, and the calibration accuracy check of sensing element-to-controller readout shall be performed. The controller shall be placed in the local-setpoint mode, and set at the temperature setpoint as shown. The controller "MANUAL/AUTO" station shall be indexed to the "AUTO" position, and the controller-tuning procedure performed.

(3) The space-temperature controller "MANUAL/AUTO" station shall be indexed to the "MANUAL" position. An economizer-mode input signal shall be simulated and it shall be verified that the economizer-mode pilot light turns on. The space-temperature controller output shall be changed and the second point of the two-point calibration accuracy check of sensing element-to-controller readout for outside-air, return-air, and space temperatures shall be performed. The controller shall be placed in the remote-setpoint mode. The setpoint low-end limit shall be set to 19 degrees C and the high-end limit shall be set to 22 degrees C. Proper operation of the temperature setpoint device at the space-temperature sensing element and transmitter location shall be verified. The space-temperature controller

tuning procedure shall be performed. The controller "MANUAL/AUTO" station shall be indexed to the "AUTO" position and the temperature setpoint device shall be set to the space temperature setpoint as shown.

(4) The relative-humidity controller and high-limit-humidity controller "MANUAL/AUTO" stations shall be indexed to the "MANUAL" position. All controller outputs shall be set to minimum. The outputs of the relative-humidity controller and the space-temperature controller shall be changed to verify that the signal selector for the cooling valve selects the proper signal. The outputs of the relative-humidity controller and the high-limit relative-humidity controller shall be changed to verify that the signal selector for the humidifier valve selects the proper signal.

(5) The relative-humidity controller "MANUAL/AUTO" station shall be indexed to the "MANUAL" position, and the two-point calibration accuracy check for sensing element-to-controller readout shall be performed. An identical calibration accuracy check and tuning procedure for the high-limit relative-humidity controller shall be performed. The controller shall be placed in the local setpoint mode, and the controller-tuning procedure shall be performed. The controller shall be set at the setpoint as shown. The high-limit relative-humidity controller "MANUAL/AUTO" station shall be indexed to the "AUTO" position, and the controller-tuning procedure shall be performed. The controller shall be placed in the local setpoint mode. The duct high-limit-humidity controller shall be set at the setpoint as shown. A high-limit transmitter input signal equal to the high-limit value shall be simulated. It shall be verified that the humidifier valve closes. The signal shall be decreased to a value of 5 percent relative humidity below the high-limit value. It shall be verified that the primary controller resumes control.

(6) The hydronic-heating temperature controller "MANUAL/AUTO" station shall be indexed to the "MANUAL" position. The controller output shall be changed to open the converter valve slightly. The two-point calibration accuracy check for sensing element-to-controller readout shall be performed. The controller shall be placed in the remote-setpoint mode. The remote setpoint shall be set for plus 5 degree F setpoint at 4 ma input. A 12 ma signal shall be sent to the remote setpoint for calibration at midrange. The temperature-controller "MANUAL/AUTO" switch shall be indexed to the "AUTO" position, the controller-tuning procedure shall be performed, and the mode-constants logged. Signals of 8 ma and 16 ma shall be sent to the remote setpoint, and it shall be verified that the controller setpoint changes to the appropriate values. The controller shall be set in the local-setpoint mode and set at the temperature setpoint as shown.

(7) An unoccupied-mode signal shall be applied, and it shall be verified that the occupied-mode pilot light turns off, the HVAC system shuts down, and the control system assumes the specified shutdown conditions. The night-thermostat temperature setting shall be turned upward, and it shall be verified that the HVAC system starts; the setting shall be turned downward, and it shall be verified that the HVAC system stops. The night thermostat shall be set at the setpoint as shown.

(8) With the HVAC system running, a filter differential-pressure switch input signal shall be simulated at the device. It shall be verified that the filter pilot light turns on, and that contact output at the EMCS terminals is made. The differential-pressure switch shall be set at the setpoint as shown.

(9) With the HVAC system running, a freezestat trip input signal shall be simulated at the device. HVAC system shutdown shall be verified; the low-temperature pilot light shall turn on, and contact output at the EMCS terminals shall be verified. The freezestat shall be set at the setpoint as shown. The HVAC system shall be restarted by manual restart, and it shall be verified that the pilot light turns off.

(10) With the HVAC system running, a smoke-detector trip input signal shall be simulated at each detector, and control-device actions and interlock functions, as described in paragraph CONTROL SEQUENCES OF OPERATION shall be verified. Simulation shall be performed without false-alarming any Life Safety systems. It shall be verified that the HVAC system shuts down and that the smoke-detector pilot light turns on, and contact output at the EMCS terminals is made. The detectors shall be reset. The HVAC system shall be restarted by manual restart, and it shall be verified that the pilot light turns off.

3.4.22 Single-Zone with Hydronic-Heating, Direct-Expansion Cooling

Steps for installation shall be as follows:

a. Step 1 - System Inspection: The HVAC system shall be verified in its shutdown condition. Power and main air shall be available at the HVAC system control panel. The outside-air and relief-air dampers shall be closed, the return-air damper shall be open, and all stages of cooling shall be off.

b. Step 2 - Calibration Accuracy Check with HVAC System Shutdown: Readings shall be taken with a digital thermometer at each temperature-sensing element location. Each controller display shall be read, and the thermometer and controller-display readings logged. The calibration accuracy of the sensing element-to-controller readout for outside-air, return-air, and space temperatures shall be checked.

c. Step 3 - Actuator Range Adjustments: A signal shall be applied to the actuator, using the controller "MANUAL/AUTO" station in "MANUAL." The proper operation of the actuators and positioners for all dampers and valves shall be verified. The signal shall be varied from live zero of 4 ma to 20 ma, and it shall be verified that the actuators travel from zero stroke to full stroke within the signal range. It shall be verified that all sequenced and parallel-operated actuators move from zero stroke to full stroke in the proper direction, and move the connected device in the proper direction from one extreme position to the other. The signal levels that move the controlled device to its extreme positions shall be logged. The operating points of the sequence shall be set for each stage of cooling and the proper operation of each stage shall be verified.

d. Step 4 - Control-System Commissioning:

(1) With the fan ready to start, the ventilation-delay-mode signal shall be applied, and it shall be verified that the ventilation-delay-mode pilot light turns on. The occupied-mode signal shall be applied, and it shall be verified that the occupied-mode pilot light turns on and that supply fan [_____] starts. It shall be verified that the outside-air and relief-air dampers are closed, the return-air damper is open, and the heating-coil and stages of cooling are under control, by slightly changing the controller output. The ventilation-delay-mode signal shall be released, and it shall be verified that the ventilation-delay-mode pilot light turns off and that the outside-air, return-air, and relief-air dampers come under control by changing the controller output.

(2) The minimum-outside-air-mode signal shall be applied. It shall be verified that the outside-air damper opens to minimum position and the economizer pilot light is off.

(3) The space-temperature controller "MANUAL/AUTO" station shall be indexed to the "MANUAL" position, and the calibration accuracy check for sensing element-to-controller readout performed. The controller shall be placed in the remote-setpoint mode. The setpoint low-end limit shall be set to 19 degrees C and the high-end limit shall be set to 22 degrees C. Proper operation of the temperature setpoint device at the space-temperature sensing element and transmitter location shall be verified. The controller "MANUAL/AUTO" station shall be indexed to the "AUTO" position, and the controller-tuning procedure shall be performed. The temperature setpoint device shall be set to the space temperature setpoint as shown. A change in space temperature shall be simulated and it shall be verified that the heating-coil valve and the stages of D/X cooling operate in sequence as shown.

(4) An unoccupied-mode signal shall be applied, and it shall be verified that the occupied-mode pilot light turns off, the HVAC system shuts down, and the control system assumes the specified shutdown conditions. The night-thermostat temperature setting shall be turned upward, and it shall be verified that the HVAC system starts; the setting shall be turned downward, and it shall be verified that the HVAC system stops. The night thermostat shall be set at the setpoint as shown.

(5) With the HVAC system running, a filter differential-pressure switch input signal shall be simulated at the device. It shall be verified that the filter pilot light turns on, and that contact output at the EMCS terminals is made. The differential-pressure switch shall be set at the setpoint as shown.

(6) With the HVAC system running, a freezestat trip input signal shall be simulated at the device. HVAC system shutdown shall be verified; the low-temperature pilot light shall turn on, and contact output at the EMCS terminals shall be verified. The freezestat shall be set at the setpoint as shown. The HVAC system shall be restarted by manual restart, and it shall be verified that the pilot light turns off.

(7) With the HVAC system running, a smoke-detector trip input

signal shall be simulated at each detector, and control-device actions and interlock functions as described in paragraph CONTROL SEQUENCES OF OPERATION shall be verified. Simulation shall be performed without false-alarming any Life Safety systems. It shall be verified that the HVAC system shuts down and that the smoke-detector pilot light turns on, and contact output at the EMCS terminals is made. The detectors shall be reset. The HVAC system shall be restarted by manual restart, and it shall be verified that the pilot light turns off.

3.5 BALANCING, COMMISSIONING, AND TESTING

3.5.1 Coordination with HVAC System Balancing

Commissioning of the control system, except for tuning of controllers, shall be performed prior to or simultaneous with HVAC system balancing. The Contractor shall tune the HVAC control system after all air-system and hydronic-system balancing has been completed, minimum damper positions set and a report has been issued.

3.5.2 Control System Calibration, Adjustments, and Commissioning

Control system commissioning shall be performed for each HVAC system, using test plans and procedures previously approved by the Government. The Contractor shall provide all personnel, equipment, instrumentation, and supplies necessary to perform commissioning and testing of the HVAC control system. All instrumentation and controls shall be calibrated and the specified accuracy shall be verified using test equipment with calibration traceable to NIST standards. Wiring shall be tested for continuity and for ground, open, and short circuits. Tubing systems shall be tested for leaks. Mechanical control devices shall be adjusted to operate as specified. HVAC control panels shall be pretested off-site as a functioning assembly ready for field connections, calibration, adjustment, and commissioning of the operational HVAC control system. Written notification of any planned commissioning or testing of the HVAC Control systems shall be given to the Government at least 14 calendar days in advance.

3.5.3 Performance Verification Test

The Contractor shall demonstrate compliance of the HVAC control system with the contract documents. Using test plans and procedures previously approved by the Government, the Contractor shall demonstrate all physical and functional requirements of the project. The performance verification test shall show, step-by-step, the actions and results demonstrating that the control systems perform in accordance with the sequences of operation. The performance verification test shall not be started until after receipt by the Contractor of written permission by the Government, based on Government approval of the commissioning report and completion of balancing. The tests shall not be conducted during scheduled seasonal off-periods of base heating and cooling systems.

3.5.4 Posted and Panel Instructions

Posted and panel instructions, showing the final installed conditions, shall be provided for each system. The posted instructions shall consist of half-size laminated drawings and shall include the control system schematic, equipment schedule, ladder diagram, sequence of operation, panel arrangement drawings, wiring diagram, and valve and damper schedules. The

posted instructions shall be permanently affixed, by mechanical means, to a wall near the control panel. Panel instructions shall consist of laminated letter-size sheets and shall include a routine maintenance checklist and controller configuration check sheets with final configuration record for each controller. Panel instructions and one copy of the operation and maintenance manuals, previously described herein, shall be placed inside each control panel.

3.6 TRAINING

3.6.1 Training-Course Requirements

A training course shall be conducted for [_____] operating staff members designated by the Contracting Officer. The training period, for a total of [32] [_____] hours of normal working time, shall be conducted within 30 days after successful completion of the performance verification test. The training course shall be conducted at the project site. Audiovisual equipment and [_____] sets of all other training materials and supplies shall be provided. A training day is defined as 8 hours of classroom instruction, including two 15-minute breaks and excluding lunchtime, Monday through Friday, during the daytime shift in effect at the training facility.

3.6.2 Training-Course Content

For guidance in planning the required instruction, the Contractor shall assume that attendees will have a high school education or equivalent, and are familiar with HVAC systems. The training course shall cover all of the material contained in the operating and maintenance instructions, the layout and location of each HVAC control panel, the layout of one of each type of unitary equipment and the locations of each, the location of each system-control device external to the panels, the location of the compressed-air station, preventive maintenance, troubleshooting, diagnostics, calibration, adjustment, commissioning, tuning, and repair procedures. Typical systems and similar systems may be treated as a group, with instruction on the physical layout of one such system. The results of the performance verification test and the calibration, adjustment and commissioning report shall be presented as benchmarks of HVAC control-system performance by which to measure operation and maintenance effectiveness.

-- End of Section --

SECTION TABLE OF CONTENTS

DIVISION 15 - MECHANICAL

SECTION 15990

TESTING, ADJUSTING, AND BALANCING OF HVAC SYSTEMS

PART 1 GENERAL

1.1 REFERENCES
1.2 SUBMITTALS
1.3 SIMILAR TERMS
1.4 TAB STANDARD
1.5 QUALIFICATIONS
1.5.1 TAB Firm
1.5.2 TAB Specialist
1.6 TAB SPECIALIST RESPONSIBILITIES

PART 2 PRODUCTS (Not Applicable)

PART 3 EXECUTION

3.1 DESIGN REVIEW
3.2 TAB RELATED HVAC SUBMITTALS
3.3 TAB SCHEMATIC DRAWINGS AND REPORT FORMS
3.4 TESTING, ADJUSTING, AND BALANCING
3.4.1 TAB Procedures
3.4.2 Systems Readiness Check
3.4.3 Preparation of TAB Report
3.4.4 TAB Verification
3.4.5 Marking of Setting
3.4.6 Identification of Test Ports

-- End of Section Table of Contents --

SECTION 15990

TESTING, ADJUSTING, AND BALANCING OF HVAC SYSTEMS

PART 1 GENERAL

1.1 REFERENCES

The publications listed below form a part of this specification to the extent referenced. The publications are referred to in the text by basic designation only.

ASSOCIATED AIR BALANCE COUNCIL (AABC)

AABC MN-1	(1989) National Standards for Testing and Balancing Heating, Ventilating, and Air Conditioning Systems

NATIONAL ENVIRONMENTAL BALANCING BUREAU (NEBB)

NEBB-01	(1991) Procedural Standards for Testing Adjusting Balancing of Environmental Systems

1.2 SUBMITTALS

Government approval is required for submittals with a "GA" designation; submittals having a "FIO" designation are for information only. The following shall be submitted in accordance with Section 01330 SUBMITTAL PROCEDURES:

SD-01 Data

TAB Related HVAC Submittals; FIO; .

A list of the TAB Related HVAC Submittals, no later than 7 days after the approval of the TAB Specialist.

SD-04 Drawings

TAB Schematic Drawings and Report Forms;; FIO.

Three copies of the TAB Schematic Drawings and Report Forms, no later than21 days prior to the start of TAB field measurements.

SD-06 Instructions

TAB Procedures;; FIO.

Proposed procedures for TAB, submitted with the TAB Schematic Drawings and Report Forms.

SD-07 Schedules

Systems Readiness Check; FIO; .

Proposed date and time to begin the Systems Readiness Check, no later than [7] [_____] days prior to the start of the Systems Readiness Check.

TAB Execution; ; FIO.

Proposed date and time to begin field measurements, making adjustments, etc., for the TAB Report, submitted with the Systems Readiness Check Report.

TAB Verification; ; FIO.

Proposed date and time to begin the TAB Verification, submitted with the TAB Report.

SD-08 Statements

TAB Firm; ; FIO.

Certification of the proposed TAB Firm's qualifications by either AABC or NEBB to perform the duties specified herein and in other related Sections, no later than 21 days after the Notice to Proceed. The documentation shall include the date that the Certification was initially granted and the date that the current Certification expires. Any lapses in Certification of the proposed TAB Firm or disciplinary action taken by AABC or NEBB against the proposed TAB Firm shall be described in detail.

TAB Specialist; ; FIO.

Certification of the proposed TAB Specialist's qualifications by either AABC or NEBB to perform the duties specified herein and in other related Sections, no later than 21 days after the Notice to Proceed. The documentation shall include the date that the Certification was initially granted and the date that the current Certification expires. Any lapses in Certification of the proposed TAB Specialist or disciplinary action taken by AABC or NEBB against the proposed TAB Specialist shall be described in detail.

Instrument Calibration; FIO; .

List of each instrument to be used during TAB, stating calibration requirements required or recommended by both the TAB Standard and the instrument manufacturer and the actual calibration history of the instrument, submitted with the TAB Procedures. The calibration history shall include dates calibrated, the qualifications of the calibration laboratory, and the calibration procedures used.

SD-09 Reports

Design Review Report; ; FIO.

A copy of the Design Review Report, no later than 14 days after approval of the TAB Firm and the TAB Specialist.

Systems Readiness Check Report; ; FIO.

A copy of completed checklists for each system, each signed by the TAB Specialist, at least [7] [_____] days prior to the start of TAB Execution. All items in the Systems Readiness Check Report shall be signed by the TAB Specialist and shall bear the seal of the Professional Society or National Association used as the TAB Standard.

TAB Report; ; FIO.

[Three] [_____] copies of the completed TAB Reports, no later that [7] [_____] days after the execution of TAB. All items in the TAB Report shall be signed by the TAB Specialist and shall bear the seal of the Professional Society or National Association used as the TAB Standard.

TAB Verification Report; ; FIO.

Threecopies of the completed TAB Verification Report, no later that 7 days after the execution of TAB Verification. All items in the TAB Verification Report shall be signed by the TAB Specialist and shall bear the seal of the Professional Society or National Association used as the TAB Standard.

SD-13 Certificates

Ductwork Leak Testing; FIO; .

A written statement signed by the TAB Specialist certifying that the TAB Specialist witnessed the Ductwork Leak Testing, it was successfully completed, and that there are no known deficiencies related to the ductwork installation that will prevent TAB from producing satisfactory results.

1.3 SIMILAR TERMS

In some instances, terminology differs between the Contract and the TAB Standard primarily because the intent of this Section is to use the industry standards specified, along with additional requirements listed herein to produce optimal results. The following table of similar terms is provided for clarification only. Contract requirements take precedent over the corresponding AABC or NEBB requirements where differences exist.

SIMILAR TERMS

Contract Term	AABC Term	NEBB Term
TAB Standard	National Standards for Testing and Balancing Heating, Ventilating, and Air Conditioning Systems	Procedural Standards for Testing Adjusting Balancing of Environmental Systems.
TAB Specialist	TAB Engineer	TAB Supervisor
Systems Readiness Check	Construction Phase Inspection	Field Readiness Check & Preliminary Field Procedures.

1.4 TAB STANDARD

TAB shall be performed in accordance with the requirements of the standard under which the TAB Firm's qualifications are approved, i.e., AABC MN-1or NEBB-01, unless otherwise specified herein. All recommendations and suggested practices contained in the TAB Standard shall be considered mandatory. The provisions of the TAB Standard, including checklists, report forms, etc., shall, as nearly as practical, be used to satisfy the

Contract requirements. The TAB Standard shall be used for all aspects of TAB, including qualifications for the TAB Firm and Specialist and calibration of TAB instruments. Where the instrument manufacturer calibration recommendations are more stringent than those listed in the TAB Standard, the manufacturer's recommendations shall be adhered to. All quality assurance provisions of the TAB Standard such as performance guarantees shall be part of this contract. For systems or system components not covered in the TAB Standard, TAB procedures shall be developed by the TAB Specialist. Where new procedures, requirements, etc., applicable to the Contract requirements have been published or adopted by the body responsible for the TAB Standard used (AABC or NEBB), the requirements and recommendations contained in these procedures and requirements shall be considered mandatory.

1.5 QUALIFICATIONS

1.5.1 TAB Firm

The TAB Firm shall be either a member of AABC or certified by the NEBB and certified in all categories and functions where measurements or performance are specified on the plans and specifications, including TAB of environmental systems . The certification shall be maintained for the entire duration of duties specified herein. If, for any reason, the firm loses subject certification during this period, the Contractor shall immediately notify the Contracting Officer and submit another TAB Firm for approval. Any firm that has been the subject of disciplinary action by either the AABC or the NEBB within the five years preceding Contract Award shall not be eligible to perform any duties related to the HVAC systems, including TAB. All work specified in this Section and in other related Sections to be performed by the TAB Firm shall be considered invalid if the TAB Firm loses its certification prior to Contract completion and must be performed by an approved successor.

1.5.2 TAB Specialist

The TAB Specialist shall be either a member of AABC or an experienced technician of the Firm certified by the NEBB. The certification shall be maintained for the entire duration of duties specified herein. If, for any reason, the Specialist loses subject certification during this period, the Contractor shall immediately notify the Contracting Officer and submit another TAB Specialist for approval. Any individual that has been the subject of disciplinary action by either the AABC or the NEBB within the five years preceding Contract Award shall not be eligible to perform any duties related to the HVAC systems, including TAB. All work specified in this Section and in other related Sections performed by the TAB Specialist shall be considered invalid if the TAB Specialist loses its certification prior to Contract completion and must be performed by the approved successor.

1.6 TAB SPECIALIST RESPONSIBILITIES

All TAB work specified herein and in related sections shall be performed under the direct guidance of the TAB Specialist.

PART 2 PRODUCTS (Not Applicable)

PART 3 EXECUTION

3.1 DESIGN REVIEW

The TAB Specialist shall review the Contract Plans and Specifications and advise the Contracting Officer of any deficiencies that would prevent the HVAC systems from effectively operating in accordance with the sequence of operation specified or prevent the effective and accurate TAB of the system. The TAB Specialist shall provide a Design Review Report individually listing each deficiency and the corresponding proposed corrective action necessary for proper system operation.

3.2 TAB RELATED HVAC SUBMITTALS

The TAB Specialist shall prepare a list of the submittals from the Contract Submittal Register that relate to the successful accomplishment of all HVAC TAB. The submittals identified on this list shall be accompanied by a letter of approval signed and dated by the TAB Specialist when submitted to the Government. The TAB Specialist shall also ensure that the location and details of ports, terminals, connections, etc., necessary to perform TAB are identified on the submittals.

3.3 TAB SCHEMATIC DRAWINGS AND REPORT FORMS

A schematic drawing showing each system component, including balancing devices, shall be provided for each system. Each drawing shall be accompanied by a copy of all report forms required by the TAB Standard used for that system. Where applicable, the acceptable range of operation or appropriate setting for each component shall be included on the forms or as an attachment to the forms. The schematic drawings shall identify all testing points and cross reference these points to the report forms and procedures.

3.4 TESTING, ADJUSTING, AND BALANCING

3.4.1 TAB Procedures

Step by step procedures for each measurement required during TAB Execution shall be provided. The procedures shall be oriented such that there is a separate section for each system. The procedures shall include measures to ensure that each system performs as specified in all operating modes, interactions with other components (such as exhaust fans, etc.) and systems, and with all seasonal operating differences, diversity, simulated loads, and pressure relationships required.

3.4.2 Systems Readiness Check

The TAB Specialist shall inspect each system to ensure that it is complete, including installation and operation of controls, and that all aspects of the facility that have any bearing on the HVAC systems, including installation of ceilings, walls, windows, doors, and partitions, are complete to the extent that TAB results will not be affected by any detail or touch-up work remaining. The TAB Specialist shall also verify that all items such as ductwork and piping ports, terminals, connections, etc., necessary to perform TAB shall be complete during the Systems Readiness Check.

3.4.3 Preparation of TAB Report

Preparation of the TAB Report shall begin only when the Systems Readiness Report has been approved. The Report shall be oriented so that there is a separate section for each system. The Report shall include a copy of the

appropriate approved Schematic Drawings and TAB Related Submittals, such as fan curves, etc., along with the completed report forms for each system. The operating points measured during successful TAB Execution and the theoretical operating points listed in the approved submittals shall be marked on the performance curves and tables. Where possible, adjustments shall be made using an "industry standard" technique which would result in the greatest energy savings, such as adjusting the speed of a fan instead of throttling the flow. Any deficiencies outside of the realm of normal adjustments and balancing during TAB Execution shall be noted along with a description of corrective action performed to bring the measurement into the specified range. If, for any reason, the TAB Specialist determines during TAB Execution that any Contract requirement cannot be met, the TAB Specialist shall immediately provide a written description of the deficiency and the corresponding proposed corrective action necessary for proper system operation to the Contracting Officer.

3.4.4 TAB Verification

The TAB Specialist shall recheck ten percent of the measurements listed in the Tab Report and prepare a TAB Verification Report. The measurements selected for verification and the individuals that witness the verification will be selected by the Contracting Officer's Representative (COR). The measurements will be recorded in the same manner as required for the TAB Report. All measurements that fall outside the acceptable operating range specified shall be accompanied by an explanation as to why the measurement does not correlate with that listed in the TAB Report and a description of corrective action performed to bring the measurement into the specified range. If over 20 percent of the measurements selected by the COR for verification fall outside of the acceptable operating range specified, the COR will select an additional ten percent for verification. If over 20 percent of the total tested (including both test groups) fall outside of the acceptable range, the TAB Report shall be considered invalid and all contract TAB work shall be repeated beginning with the Systems Readiness Check.

3.4.5 Marking of Setting

Following approval of TAB Verification Report, the setting of all HVAC adjustment devices including valves, splitters, and dampers shall be permanently marked by the TAB Specialist so that adjustment can be restored if disturbed at any time.

3.4.6 Identification of Test Ports

The TAB Specialist shall permanently and legibly identify the location points of duct test ports. If the ductwork has exterior insulation, the identification shall be made on the exterior side of the insulation. All penetrations through ductwork and ductwork insulation shall be sealed to prevent air leakage or to maintain integrity of vapor barrier.

-- End of Section --

SECTION TABLE OF CONTENTS

DIVISION 16 - ELECTRICAL

SECTION 16370

ELECTRICAL DISTRIBUTION SYSTEM, AERIAL

PART 1 GENERAL

1.1 REFERENCES
1.2 GENERAL REQUIREMENTS
1.2.1 Terminology
1.2.2 Service Conditions
1.2.3 Year 2000 Compliant Equipment
1.3 SUBMITTALS
1.4 DELIVERY, STORAGE, AND HANDLING
1.5 EXTRA MATERIALS

PART 2 PRODUCTS

2.1 GENERAL REQUIREMENTS
2.2 STANDARD PRODUCT
2.3 NAMEPLATES
2.3.1 General
2.4 CORROSION PROTECTION
2.4.1 Aluminum Materials
2.4.2 Ferrous Metal Materials
2.4.2.1 Hardware
2.4.2.2 Equipment
2.4.3 Finishing
2.5 CONDUCTORS, CONNECTORS, AND SPLICES
2.5.1 Aluminum-Composition Conductors
2.5.2 Copper Conductors
2.5.3 Connectors and Splices
2.6 MEDIUM-VOLTAGE LINES
2.6.1 Bare Medium-Voltage Lines
2.7 POLES AND HARDWARE
2.7.1 Wood Poles
2.7.2 Pole Line Hardware
2.7.3 Guy Assemblies
2.8 INSULATORS
2.8.1 Medium-Voltage Line Insulators
2.8.2 Strain Insulators for Guy Wires
2.8.3 Apparatus Insulators
2.9 CROSSARM ASSEMBLIES
2.9.1 Crossarms
2.9.2 Crossarm Gains
2.10 FUSES AND SWITCHES, MEDIUM-VOLTAGE
2.10.1 Fuse Cutouts
2.11 SURGE ARRESTERS
2.12 GROUNDING AND BONDING
2.12.1 Driven Ground Rods
2.12.2 Grounding Conductors

2.13 WARNING SIGNS
2.14 FACTORY TESTS

PART 3 EXECUTION

3.1 GENERAL INSTALLATION REQUIREMENTS
3.1.1 Conformance to Codes
3.1.2 Verification of Dimensions
3.2 POLE INSTALLATION
3.2.1 Wood Pole Setting
3.3 CROSSARM MOUNTING
3.3.1 Line Arms and Buck Arms
3.3.2 Equipment Arms
3.4 GUY INSTALLATION
3.5 CONDUCTOR INSTALLATION
3.5.1 Line Conductors
3.5.2 Connectors and Splices
3.5.3 Conductor-To-Insulator Attachments
3.5.4 Armor Rods
3.6 CONNECTIONS TO UTILITY LINES
3.7 CONNECTIONS BETWEEN AERIAL AND UNDERGROUND SYSTEMS
3.8 CONNECTIONS TO BUILDINGS
3.8.1 Underground Services
3.9 GROUNDING
3.9.1 Grounding Electrodes
3.9.2 Grounding and Bonding Connections
3.9.3 Grounding Electrode Conductors
3.10 FIELD TESTING
3.10.1 General
3.10.2 Safety
3.10.3 Ground-Resistance Tests
3.10.4 Operating Tests
3.11 ACCEPTANCE

-- End of Section Table of Contents --

SECTION 16370

ELECTRICAL DISTRIBUTION SYSTEM, AERIAL

PART 1 GENERAL

1.1 REFERENCES

The publications listed below form a part of this specification to the extent referenced. The publications are referred to in the text by basic designation only.

AMERICAN NATIONAL STANDARDS INSTITUTE (ANSI)

ANSI C29.1	(1988) Electrical Power Insulators - Test Methods
ANSI C29.2	(1992) Insulators - Wet-Process Porcelain and Toughened Glass - Suspension Type
ANSI C29.4	(1989) Wet-Process Porcelain Insulators - Strain Type
ANSI C29.5	(1984; R 1991) Wet-Process Porcelain Insulators - Low- and Medium-Voltage Types
ANSI C29.6	(1984) Wet-Process Porcelain Insulators - High-Voltage Pin Type
ANSI C29.8	(1985) Wet-Process Porcelain Insulators - Apparatus, Cap and Pin Type
ANSI C29.9	(1983) Wet-Process Porcelain Insulators - Apparatus, Post-Type
ANSI C135.1	(1979) Galvanized Steel Bolts and Nuts for Overhead Line Construction
ANSI C135.2	(1987) Threaded Zinc-Coated Ferrous Strand-Eye Anchor Rods and Nuts for Overhead Line Construction
ANSI C135.4	(1987) Zinc-Coated Ferrous Eyebolts and Nuts for Overhead Line Construction
ANSI C135.14	(1979) Staples with Rolled or Slash Points for Overhead Line Construction
ANSI C135.17	(1988) Insulator Pins with Lead Threads for Overhead Line Construction Galvanized Ferrous Bolt-Type
ANSI C135.22	(1988) Galvanized Ferrous Pole-Top Insulator Pins with Lead Threads for Overhead Line Construction

ANSI C135.33	(1988) Crossarm Gains, Galvanized Ferrous
ANSI O5.1	(1992) Specifications and Dimensions for Wood Poles

AMERICAN SOCIETY FOR TESTING AND MATERIALS (ASTM)

ASTM A 123	(1989a) Zinc (Hot-Dip Galvanized) Coatings on Iron and Steel Products
ASTM A 153	(1996) Zinc Coating (Hot-Dip) on Iron and Steel Hardware
ASTM A 475	(1995) Zinc-Coated Steel Wire Strand
ASTM A 575	(1989) Steel Bars, Carbon, Merchant Quality, M-Grades
ASTM A 576	(1990b) Steel Bars, Carbon, Hot-Wrought, Special Quality
ASTM B 1	(1990) Hard-Drawn Copper Wire
ASTM B 8	(1993) Concentric-Lay-Stranded Copper Conductors, Hard, Medium-Hard, or Soft
ASTM B 117	(1994) Operating Salt Spray (Fog) Testing Apparatus
ASTM B 228	(1993) Concentric-Lay-Stranded Copper-Clad Steel Conductors
ASTM B 230	(1989) Aluminum 1350-H19 Wire for Electrical Purposes
ASTM B 231	(1990) Concentric-Lay-Stranded Aluminum 1350 Conductors
ASTM B 232	(1992) Concentric-Lay-Stranded Aluminum Conductors, Coated-Steel Reinforced (ACSR)
ASTM B 398	(1990) Aluminum-Alloy 6201-T81 Wire for Electrical Purposes
ASTM B 399	(1992) Concentric-Lay-Stranded Aluminum-Alloy 6201-T81 Conductors
ASTM B 416	(1993) Concentric-Lay-Stranded Aluminum-Clad Steel Conductors
ASTM D 1654	(1992) Evaluation of Painted or Coated Specimens Subjected to Corrosive Environment

AMERICAN WOOD-PRESERVERS' ASSOCIATION (AWPA)

AWPA C4	(1995) Poles - Preservative Treatment by Pressure Processes

AWPA C25	(1995) Sawn Crossarms - Preservative Treatment by Pressure Processes
AWPA P1/P13	(1995) Standard for Coal Tar Creosote for Land and Fresh Water and Marine (Coastal Water Use)
AWPA P5	(1995) Standards for Waterborne Preservatives
AWPA P8	(1995) Standards for Oil-Borne Preservatives
AWPA P9	(1992) Standards for Solvents and Formulations for Organic Preservative Systems

INSTITUTE OF ELECTRICAL AND ELECTRONIC ENGINEERS (IEEE)

IEEE C2	(1997) National Electrical Safety Code
IEEE C37.41	(1994) Design Tests for High-Voltage Fuses, Distribution Enclosed Single-Pole Air Switches, Fuse Disconnecting Switches, and Accessories
IEEE C57.19.00	(1991) IEEE Standard General Requirements and Test Procedures for Outdoor Power Apparatus Bushings
IEEE C57.19.01	(1991) IEEE Standard Performance Characteristics and Dimensions for Outdoor Apparatus Bushings
IEEE C62.1	(1989; R 1994) Surge Arresters for ac Power Circuits
IEEE C62.2	(1987; R 1994) Guide for the Application of Gapped Silicon-Carbide Surge Arresters for Alternating Current Systems
IEEE C62.11	(1993) IEEE Standard Metal-Oxide Surge Arresters for AC Power Circuits
IEEE Std 81	(1983) Guide for Measuring Earth Resistivity, Ground Impedance, and Earth Surface Potentials of a Ground System (Part 1)
IEEE Std 100	(1992) IEEE Standard Dictionary of Electrical and Electronics Terms

NATIONAL ELECTRICAL MANUFACTURERS ASSOCIATION (NEMA)

NEMA HV 2	(1984; R 1991) Application Guide for Ceramic Suspension Insulators
NEMA LA 1	(1992) Surge Arresters

NEMA SG 2	(1993) High Voltage Fuses

NATIONAL FIRE PROTECTION ASSOCIATION (NFPA)

NFPA 70	(1996) National Electrical Code

RURAL ELECTRIFICATION ADMINISTRATION (REA)

REA Bulletin 1728H-701	(1993) REA Specification for Wood Crossarms (Solid and Laminated), Transmission Timbers and Pole Keys

UNDERWRITERS LABORATORIES (UL)

UL 467	(1993; Rev thru Aug 1996) Grounding and Bonding Equipment
UL 486A	(1991; Rev Oct 1991) Wire Connectors and Soldering Lugs for Use with Copper Conductors
UL 486B	(1991; Rev thru Oct 1996) Wire Connectors for Use with Aluminum Conductors

1.2 GENERAL REQUIREMENTS

1.2.1 Terminology

Terminology used in this specification is as defined in IEEE Std 100.

1.2.2 Service Conditions

Items provided under this section shall be specifically suitable for the following service conditions.

a. Altitude 1433 meters

b. Ambient Temperature -10 to 45 degrees C

c. Seismic Zone 3

1.2.3 Year 2000 Compliant Equipment

Where applicable, all equipment specified shall be Year 2000 compliant and shall be able to accurately process date/time data (including, but not limited to, calculating, comparing, and sequencing) from, into, and between the twentieth and twenty-first centuries, including leap year calculations, when used in accordance with the product documentation provided by the contractor, provided that all products (e.g. hardware, software, firmware) used in combination with other information technology, shall accurately process date/time data if the other information technology properly exchanges date/time data with it.

1.3 SUBMITTALS

Government approval is required for submittals with a "GA" designation; submittals having an "FIO" designation are for information only. The following shall be submitted in accordance with Section 01330 SUBMITTAL PROCEDURES:

SD-01 Data

Manufacturer's Catalog; FIO.

Catalog cuts, brochures, circulars, specifications, product data, and printed information in sufficient detail and scope to verify compliance with the requirements of the contract documents.

Material, Equipment, and Fixture Lists; FIO.

A complete itemized listing of equipment and materials proposed for incorporation into the work. Each entry shall include the item number, the quantity of items proposed, and the name of the manufacturer of the item.

Installation Procedures; FIO.

As a minimum, installation procedures for regulators, transformers and reclosers. Procedures shall include diagrams, instructions, and precautions required to install, adjust, calibrate, and test the devices and equipment.

SD-04 Drawings

Electrical Distribution System; FIO.

Detail drawings consisting of equipment drawings, illustrations, schedules, instructions, diagrams and other information necessary to define the installation and enable the Government to check conformity with the requirements of the contract drawings. Detail drawings shall as a minimum include:

a. Poles.
b. Crossarms.
c. Conductors.
d. Insulators.
e. Surge arresters.

If departures from the contract drawings are deemed necessary by the Contractor, complete details of such departures shall be submitted with the detail drawings. Approved departures shall be made at no additional cost to the Government.

Detail drawings shall show how components are assembled, function together and how they will be installed on the project. Data and drawings for component parts of an item or system shall be coordinated and submitted as a unit. Data and drawings shall be coordinated and included in a single submission. Multiple submissions for the same equipment or system are not acceptable except where prior approval has been obtained from the Contracting Officer. In such cases, a list of data to be submitted later shall be included with the first submission. Detail drawings shall consist of the following:

a. Detail drawings showing physical arrangement, construction details, connections, finishes, materials used in fabrication, provisions for conduit or busway entrance, access requirements for installation and maintenance, physical size, electrical characteristics, foundation and support details, and equipment weight. Drawings shall be drawn to scale and/or dimensioned.

Optional items shall be clearly identified as included or excluded.

b. Internal wiring diagrams of equipment showing wiring as actually provided for this project. External wiring connections shall be clearly identified.

As-Built Drawings; FIO.

The as-built drawings shall be a record of the construction as installed. The drawings shall include the information shown on the contract drawings as well as deviations, modifications, and changes from the contract drawings, however minor. The as-built drawings shall be kept at the job site and updated daily. The as-built drawings shall be a full sized set of prints marked to reflect deviations, modifications, and changes. The as-built drawings shall be complete and show the location, dimensions, part identification, and other information. Additional sheets may be added. The as-built drawings shall be jointly inspected for accuracy and completeness by the Contractor's quality control representative and by the Contracting Officer prior to the submission of each monthly pay estimate. Upon completion of the work, the Contractor shall submit three full sized sets of the marked prints to the Contracting Officer for approval. If upon review, the as-built drawings are found to contain errors and/or omissions, they will be returned to the Contractor for correction. The Contractor shall correct and return the as-built drawings to the Contracting Officer for approval within ten calendar days from the time the drawings are returned to the Contractor.

SD-09 Reports

Factory Test; FIO.

Certified factory test reports shall be submitted when the manufacturer performs routine factory tests, including tests required by standards listed in paragraph REFERENCES. Results of factory tests performed shall be certified by the manufacturer, or an approved testing laboratory, and submitted within 7 days following successful completion of the tests specified in applicable publications or in these specifications.

Field Testing; FIO.

A proposed field test plan 20 days prior to testing the installed system. No field test shall be performed until the test plan is approved. The test plan shall consist of complete field test procedures including tests to be performed, test equipment required, and tolerance limits.

Test Reports; FIO.

Six copies of the information described below in 215.9 by 279.4 mm (8-1/2 by 11 inch) binders having a minimum of 5 rings, and including a separate section for each test. Sections shall be separated by heavy plastic dividers with tabs.

a. A list of equipment used, with calibration certifications.
b. A copy of measurements taken.
c. The dates of testing.
d. The equipment and values to be verified.
e. The condition specified for the test.
f. The test results, signed and dated.
g. A description of adjustments made.

SD-13 Certificates

Materials and Equipment; FIO.

Where materials or equipment are specified to conform to the standards of the Underwriters Laboratories (UL) or to be constructed or tested, or both, in accordance with the standards of the American National Standards Institute (ANSI), the Institute of Electrical and Electronic Engineers (IEEE), or the National Electrical Manufacturers Association (NEMA), the Contractor shall submit proof that the items provided under this section of the specifications conform to such requirements. The label of, or listing by, UL will be acceptable as evidence that the items conform thereto. Either a certification or a published catalog specification data statement, to the effect that the item is in accordance with the referenced ANSI or IEEE standard, will be acceptable as evidence that the item conforms thereto. A similar certification or published catalog specification data statement to the effect that the item is in accordance with the referenced NEMA standard, by a company listed as a member company of NEMA, will be acceptable as evidence that the item conforms thereto. In lieu of such certification or published data, the Contractor may submit a certificate from a recognized testing agency equipped and competent to perform such services, stating that the items have been tested and that they conform to the requirements listed, including methods of testing of the specified agencies.

SD-19 OPERATION AND MAINTENANCE MANUALS

Electrical Distribution System; FIO.

Six copies of Operation and Maintenance manuals electrical distribution system shall be provided, within 7 calendar days following the completion of tests and shall include assembly, installation, operation and maintenance instructions, spare parts data which provides supplier name, current cost, catalog order number, and a recommended list of spare parts to be stocked. Manuals shall also include data outlining detailed procedures for system startup and operation, and a troubleshooting guide which lists possible operational problems and corrective action to be taken. A brief description of all equipment, basic operating features, and routine maintenance requirements shall also be included. Documents shall be bound in a binder marked or identified on the spine and front cover. A table of contents page shall be included and marked with pertinent contract information and contents of the manual. Tabs shall be provided to separate different types of documents, such as catalog ordering information, drawings, instructions, and spare-parts data. Index sheets shall be provided for each section of the manual when warranted by the quantity of documents included under separate tabs or dividers. Three additional copies of the instructions manual shall be provided within 30 calendar days following the manuals.

Three additional copies of the instructions manual within 30 calendar days following the approval of the manuals.

1.4 DELIVERY, STORAGE, AND HANDLING

Devices and equipment shall be visually inspected by the Contractor when received and prior to acceptance from conveyance. Stored items shall be protected from the environment in accordance with the manufacturer's published instructions. Damaged items shall be replaced. Wood poles held

in storage for more than 2 weeks shall be stored in accordance with ANSI O5.1. Handling of wood poles shall be in accordance with ANSI O5.1, except that pointed tools capable of producing indentations more than inch in depth shall not be used. Metal poles shall be handled and stored in accordance with the manufacturer's instructions.

1.5 EXTRA MATERIALS

One additional spare fuse or fuse element for each furnished fuse or fuse element shall be delivered to the Contracting Officer when the electrical system is accepted. Two complete sets of all special tools required for maintenance shall be provided, complete with a suitable tool box. Special tools are those that only the manufacturer provides, for special purposes (to access compartments, or operate, adjust, or maintain special parts).

PART 2 PRODUCTS

2.1 GENERAL REQUIREMENTS

Products shall conform to the following requirements. Items of the same classification shall be identical including equipment, assemblies, parts, and components.

2.2 STANDARD PRODUCT

Material and equipment shall be the standard product of a manufacturer regularly engaged in the manufacture of the product and shall essentially duplicate items that have been in satisfactory use for at least 2 years prior to bid opening.

2.3 NAMEPLATES

2.3.1 General

Each major component shall have the manufacturer's name, address, type or style, model or serial number, and catalog number on a nameplate securely attached to the equipment. Equipment containing liquid-dielectrics shall have the type of dielectric on the nameplate. Nameplates shall be made of noncorrosive metal. As a minimum, nameplates shall be provided for cabinets, circuit breakers, and switches.

2.4 CORROSION PROTECTION

2.4.1 Aluminum Materials

Aluminum shall not be used in contact with earth or concrete. Where aluminum conductors are connected to dissimilar metal, fittings conforming to UL 486B shall be used.

2.4.2 Ferrous Metal Materials

2.4.2.1 Hardware

Ferrous metal hardware shall be hot-dip galvanized in accordance with ASTM A 153 and ASTM A 123.

2.4.2.2 Equipment

Equipment and component items, including but not limited to transformers

and ferrous metal luminaires not hot-dip galvanized or porcelain enamel finished, shall be provided with corrosion-resistant finishes which shall withstand 120 hours of exposure to the salt spray test specified in ASTM B 117 without loss of paint or release of adhesion of the paint primer coat to the metal surface in excess of 1.6 mm (1/16 inch) from the test mark. The described test mark and test evaluation shall be in accordance with ASTM D 1654 with a rating of not less than 7 in accordance with TABLE 1, (procedure A). Cut edges or otherwise damaged surfaces of hot-dip galvanized sheet steel or mill galvanized sheet steel shall be coated with a zinc rich paint conforming to the manufacturer's standard.

2.4.3 Finishing

Painting required for surfaces not otherwise specified and finish painting of items only primed at the factory shall be as specified in Section 09900 PAINTING, GENERAL.

2.5 CONDUCTORS, CONNECTORS, AND SPLICES

2.5.1 Aluminum-Composition Conductors

All-aluminum-conductors, AAC, shall be alloy 1350-H19 and comply with ASTM B 230 and ASTM B 231. All-aluminum-alloy-conductors, AAAC, shall be alloy 6201-T81 and comply with ASTM B 398 and ASTM B 399. Aluminum-conductor-steel-reinforced, ACSR, shall comply with ASTM B 232.

2.5.2 Copper Conductors

Hard-drawn-copper conductors shall comply with ASTM B 1 and ASTM B 8 as appropriate for the conductor size.

2.5.3 Connectors and Splices

Connectors and splices shall be of copper alloys for copper conductors, aluminum alloys for aluminum-composition conductors, and a type designed to minimize galvanic corrosion for copper to aluminum-composition conductors. Aluminum-composition and aluminum-composition to copper shall comply with UL 486B, and copper-to-copper shall comply with UL 486A.

2.6 MEDIUM-VOLTAGE LINES

2.6.1 Bare Medium-Voltage Lines

Bare medium-voltage line conductors shall be all-aluminum-conductor, AAC; all-aluminum-alloy-conductor, AAAC; aluminum-conductor-steel-reinforced, ACSR; or hard-drawn-copper, CU to match existing. Conductor types shall not be mixed on any project, unless specifically indicated. Conductors larger than No. 2 AWG shall be stranded.

2.7 POLES AND HARDWARE

Poles shall be of lengths and classes indicated.

2.7.1 Wood Poles

Wood poles shall comply with ANSI O5.1, and shall be pressure treated in accordance with AWPA C4, with creosote conforming to AWPA P1/P13or with oil-borne preservatives and petroleum conforming to AWPA P8 and AWPA P9, respectively, and waterborne preservatives conforming to AWPA P5.

Waterborne preservatives shall be either chromated or ammoniacal copper arsenate. Any species listed in ANSI O5.1 for which a preservative treatment is not specified in AWPA C4, shall not be used; northern white cedar, if treated as specified for western red cedar, and western fir, if treated as specified for Douglas fir, may be used. Wood poles shall have pole markings located approximately 3 m from pole butts for poles 15.2 m (50 feet) or less in length, and 4 m from the pole butts for poles longer than 16.8 m (55 feet) in length. Poles shall be machine trimmed by turning smooth full length, and shall be roofed, gained, and bored prior to pressure treatment. Where poles are not provided with factory-cut gains, metal gain plates shall be provided.

2.7.2 Pole Line Hardware

Zinc-coated hardware shall comply with ANSI C135.1, ANSI C135.2, ANSI C135.4, ANSI C135.14, ANSI C135.17, ANSI C135.22, and ANSI C135.33. Steel hardware shall comply with ASTM A 575 and ASTM A 576. Hardware shall be hot-dip galvanized in accordance with ASTM A 153. Pole-line hardware shall be hot-dip galvanized steel. Washers shall be installed under boltheads and nuts on wood surfaces and elsewhere as required. Washers used on through-bolts and double-arming bolts shall be approximately 57.2 mm square and 4.8 mm (3/16 inch) thick. The diameter of holes in washers shall be the correct standard size for the bolt on which a washer is used. Washers for use under heads of carriage-bolts shall be of the proper size to fit over square shanks of bolts. Eye bolts, bolt eyes, eyenuts, strain-load plates, lag screws, guy clamps, fasteners, hooks, shims, and clevises shall be used wherever required to support and to protect poles, brackets, crossarms, guy wires, and insulators.

2.7.3 Guy Assemblies

Guy assemblies shall be aluminum-clad steel in accordance with ASTM B 416, copper-clad steel in accordance with ASTM B 228, or zinc-coated steel in accordance with ASTM A 475. Guy assemblies, including insulators and attachments, shall provide a strength exceeding the required guy strength. Three-eye thimbles shall be provided on anchor rods to permit attachment of individual primary, secondary, and communication down guys. Anchors shall provide adequate strength to support all loads. Guy strand shall be 7 strand. Guy material shall be Class 30 EHS copper-clad steel, Class B zinc-coated-steel high-strength grade, or aluminum-clad-steel-strand, with a minimum breaking strength not less than 26.7 kN (6000 pounds), except where two or more guys are used to provide the required strength. Guy rods shall be not less than 2.4 m (8 feet) in length by 19.1 mm (3/4 inch) in diameter.

2.8 INSULATORS

Insulators shall comply with NEMA HV 2 for general requirements. Suspension insulators shall be used at corners, angles, dead-ends, other areas where line insulators do not provide adequate strength, and as indicated. Mechanical strength of suspension insulators and hardware shall exceed the rated breaking strength of the attached conductors.

2.8.1 Medium-Voltage Line Insulators

Medium-voltage line insulators shall comply with ANSI C29.2, ANSI C29.5, and ANSI C29.6, and as applicable. Ratings shall not be lower than the ANSI classes indicated in TABLE I. Horizontal line-post insulators shall be used for armless construction and shall have the same mechanical and

electrical ratings as vertical line-post insulators for the ANSI class indicated, but shall be modified to be suitable for horizontal installation. Where line-post insulators are used for angles greater than 15 degrees, clamp-top fittings shall be provided as well as for other locations shown. Conductor clamps for use with clamp-top, line-post insulators shall be hot-dip galvanized malleable iron for copper conductors and aluminum alloy for aluminum-composition conductors. Either line-post or pin insulators may be used for crossarm construction. Pin insulators for use on voltages in excess of 6 kV phase-to-phase shall be radio-interference-freed or else line-post insulators shall be used.

TABLE I

MINIMUM ANSI RATING OF MEDIUM-VOLTAGE INSULATORS BY CLASS

Voltage Level	Line-Post	Pin	Suspension
6 kV to 15 kV	57-1 or 11	55-5	Two 52-2
	57-2 or 12	56-3	Two 52-3 or 4

2.8.2 Strain Insulators for Guy Wires

Strain insulators for use in insulated guy assemblies shall comply with ANSI C29.4 for porcelain or equivalent fiberglass, and shall have a mechanical strength exceeding the rated breaking strength of the attached guy wire. Insulators shall be not smaller than Class 54-2 for lines of 6 kV to 15 kV.

2.8.3 Apparatus Insulators

Apparatus insulators shall comply with IEEE C57.19.00, IEEE C57.19.01, ANSI C29.8, and ANSI C29.9 as applicable.

2.9 CROSSARM ASSEMBLIES

2.9.1 Crossarms

Crossarms shall comply with REA Bulletin 1728H-701 and shall be solid wood, distribution type, except cross-sectional area with pressure treatment conforming to AWPA C25, and a 6.4 mm (1/4 inch), 45 degree chamfer on all top edges. Cross-sectional area minimum dimensions shall be 108.0 mm (4-1/4 inches) in height by 82.6 mm (3-1/4 inches) in depth in accordance with IEEE C2 for Grade B construction. Crossarms shall be 2.4 m (8 feet) in length, except that 3.1 m (10 foot) crossarms shall be used for crossarm-mounted banked single-phase transformers or elsewhere as indicated. Crossarms shall be machined, chamfered, trimmed, and bored for stud and bolt holes before pressure treatment. Factory drilling shall be provided for pole and brace mounting, for four pin or four vertical line-post insulators, and for four suspension insulators, except where otherwise indicated or required. Drilling shall provide required climbing space and wire clearances. Crossarms shall be straight and free of twists

to within 2.5 mm per 304.8 mm (1/10 inch per foot) of length. Bend or twist shall be in one direction only.

2.9.2 Crossarm Gains

Crossarm gains shall comply with ANSI C135.33.

2.10 FUSES AND SWITCHES, MEDIUM-VOLTAGE

2.10.1 Fuse Cutouts

Medium-voltage fuses and cutouts shall comply with NEMA SG 2 and shall be of the loadbreak open type construction rated 15 kV and of the heavy duty type. Open-link cut-outs are not acceptable. Fuses shall be either indicating or dropout type. Fuse ratings shall be as indicated. Fuse cutouts shall be equipped with mounting brackets suitable for the indicated installations.

2.11 SURGE ARRESTERS

Surge arresters shall comply with NEMA LA 1 and IEEE C62.1, IEEE C62.2, and IEEE C62.11, and shall be provided for protection of aerial-to-underground transitions, automatic circuit reclosers, capacitor equipment, group-operated load-interrupter switches, transformers and other indicated equipment. Arresters shall be distribution class, rated as shown. Arresters shall be equipped with mounting brackets suitable for the indicated installations. Arresters shall be of the metal-oxide varistor type suitable for outdoor installations.

2.12 GROUNDING AND BONDING

2.12.1 Driven Ground Rods

Ground rods shall be of copper-clad steel conforming to UL 467 not less than 19.1 mm (3/4 inch) in diameter by 3.1 meter (10 feet) in length of the sectional type driven full length into the earth.

2.12.2 Grounding Conductors

Grounding conductors shall be bare, except where installed in conduit with associated phase conductors. Insulated conductors shall be of the same material as the phase conductors and green color-coded, except that conductors shall be rated no more than 600 volts. Bare conductors shall be ASTM B 8 soft-drawn unless otherwise indicated. Aluminum is not acceptable.

2.13 WARNING SIGNS

Warning signs shall be porcelain enameled steel or approved equal. Voltage warning signs shall comply with IEEE C2.

2.14 FACTORY TESTS

Factory tests shall be performed, as follows, in accordance with the applicable publications and with other requirements of these specifications. The Contracting Officer shall be notified at least 10 days before the equipment is ready for testing.

a. High-Voltage Fuses: Manufacturer's standard tests in accordance with IEEE C37.41.

b. Electric Power Insulators: Manufacturer's standard tests in accordance with ANSI C29.1.

PART 3 EXECUTION

3.1 GENERAL INSTALLATION REQUIREMENTS

Equipment and devices shall be installed and energized in accordance with the manufacturer's published instructions. Circuits installed in conduits or underground and splices and terminations for medium-voltage cable shall conform to the requirements of Section 16375 ELECTRICAL DISTRIBUTION SYSTEM, UNDERGROUND. Secondary circuits installed in conduit on poles shall conform to the requirements of Section 16415 ELECTRICAL WORK, INTERIOR.

3.1.1 Conformance to Codes

The installation shall comply with the requirements and recommendations of IEEE C2 for medium loading districts, Grade B construction. No reduction in clearance shall be made. The installation shall also comply with the applicable parts of NFPA 70.

3.1.2 Verification of Dimensions

The Contractor shall become familiar with details of the work, shall verify dimensions in the field, and shall notify the Contracting Officer of any discrepancy before performing any work.

3.2 POLE INSTALLATION

Joint-use electric/roadway-lighting poles for overhead electric and communication lines shall be wood poles utilizing crossarm construction. Provision for communication services is required on pole-line construction, except where specifically noted otherwise. A vertical pole space of not less than 600 mm (2 feet) shall be reserved at all locations.

3.2.1 Wood Pole Setting

Wood poles shall be set straight and firm. In normal firm ground, minimum pole-setting depths shall be as listed in Table II. In rocky or swampy ground, pole-setting depths shall be decreased or increased respectively in accordance with the local utility's published standards and as approved. Poles in straight runs shall be in a straight line. Curved poles shall be placed with curvatures in the direction of the pole line. Poles shall be set to maintain as even a grade as practicable. When the average ground run is level, consecutive poles shall not vary more than 1.5 m in height. When the ground is uneven, poles differing in length shall be kept to a minimum by locating poles to avoid the highest and lowest ground points. If it becomes necessary to shorten a pole, a piece shall be sawed off the top end and roofed. If any pole is shortened after treatment, the shortened end of the pole shall be given an application of hot preservative. Where poles are set on hilly terrain, along edges of cuts or embankments, or where soil may be washed out, special precautions shall be taken to ensure durable pole foundations, and the setting depth shall be measured from the lower side of the pole. Holes shall be dug large enough to permit proper use of tampers to the full depth of a hole. Earth shall be placed into the hole in 300 mm maximum layers, then thoroughly tamped before the next layer is placed. Surplus earth shall be placed around each

pole in a conical shape and packed tightly to drain water away from poles.

TABLE II

MINIMUM POLE-SETTING DEPTH (METERS)

Length Overall Meters	Straight Lines	Curves, Corners, and Points of Extra Strain
6.1	1.5	1.5
7.6	1.7	1.7
9.2	1.7	1.7
10.7	1.8	1.8
12.2	1.8	1.8
13.7	2.0	2.1
15.2	2.1	2.3
16.7	2.3	2.5
18.3	2.5	2.6
19.8	2.6	2.6

3.3 CROSSARM MOUNTING

Crossarms shall be bolted to poles with 15.9 mm (5/8 inch) through-bolts with square washers at each end. Bolts shall extend not less than 3 mm nor more than 50 mm beyond nuts. On single crossarm construction, the bolt head shall be installed on the crossarm side of the pole. Metal crossarm braces shall be provided on crossarms. Flat braces may be provided for 2.4 m (8 foot) crossarms and shall be 6.4 by 31.8 mm (1/4 by 1-1/4 inches), not less than 700 mm (28 inches) in length. Flat braces shall be bolted to arms with 9.5 mm (3/8 inch) carriage bolts with round or square washers between boltheads and crossarms, and secured to poles with 50.8 by 101.6 mm (1/2 by 4 inch) lag screws after crossarms are leveled and aligned. Angle braces are required for 3.1 m (10 foot) crossarms and shall be 1.5 m (60 inch) span by 457.2 mm (18 inch) drop formed in one piece from 38.1 by 38.1 by 4.8 mm (1-1/2 by 1-1/2 by 3/16 inch) angle. Angle braces shall be bolted to crossarms with 50.8 mm (1/2 inch) bolts with round or square washers between boltheads and crossarms, and secured to poles with 15.9 mm (5/8 inch) through-bolts. Double crossarms shall be securely held in position by means of 15.9 mm (5/8 inch) double-arming bolts. Each double-arming bolt shall be equipped with four nuts and four square washers.

3.3.1 Line Arms and Buck Arms

Line arms and buck arms shall be set at right angles to lines for straight runs and for angles 45 degrees and greater; and line arms shall bisect angles of turns of less than 45 degrees. Dead-end assemblies shall be used for turns where shown. Buckarms shall be installed, as shown, at corners and junction poles. Double crossarms shall be provided at ends of joint use or conflict sections, at dead-ends, and at angles and corners to provide adequate vertical and longitudinal strength. Double crossarms shall be provided at each line-crossing structure and where lines not attached to the same pole cross each other.

3.3.2 Equipment Arms

Equipment arms shall be set parallel or at right angles to lines as required to provide climbing space. Equipment arms shall be located below line construction to provide necessary wire and equipment clearances.

3.4 GUY INSTALLATION

Guys shall be provided with loads and strengths as determined by a registered professional Electrical Engineer or as indicated, and wherever conductor tensions are not balanced, such as at angles, corners, and dead-ends. Where a single guy will not provide the required strength, two or more guys shall be provided. Where guys are wrapped around poles, at least two guy hooks shall be provided and pole shims shall be provided where guy tension exceeds 27 kN (6000 pounds). Guy clamps 152.4 mm (6 inches) in length with three 15.9 mm (5/8 inch) bolts, or offset-type guy clamps, or approved guy grips shall be provided at each guy terminal. Guy-strain insulators shall be provided in each guy for wood poles. Multiple-helix screw anchors shall be provided in marshy ground; rock anchors shall be installed in rock at right angles to guys, elsewhere anchors shall be of an expanding type, except that power installed screw anchors of equivalent holding power are acceptable. A half-round yellow polyvinyl, fiberglass, or other suitable plastic guy marker, not less than 2.4 m (8 feet) in length, shall be provided at the anchor end of each guy shown, securely clamped to the guy or anchor at the bottom and top of the marker. Holding capacities for down guys shall be based on a lead angle of 45 degrees.

3.5 CONDUCTOR INSTALLATION

3.5.1 Line Conductors

Unless otherwise indicated, conductors shall be installed in accordance with manufacturer's approved tables of sags and tensions. Proper care shall be taken in handling and stringing conductors to avoid abrasions, sharp bends, cuts, kinks, or any possibility of damage to insulation or conductors. Conductors shall be paid out with the free end of conductors fixed and cable reels portable, except where terrain or obstructions make this method unfeasible. Bend radius for any insulated conductor shall not be less than the applicable NEMA specification recommendation. Conductors shall not be drawn over rough or rocky ground, nor around sharp bends. When installed by machine power, conductors shall be drawn from a mounted reel through stringing sheaves in straight lines clear of obstructions. Initial sag and tension shall be checked by the Contractor, in accordance with the manufacturer's approved sag and tension charts, within an elapsed time after installation as recommended by the manufacturer.

3.5.2 Connectors and Splices

Connectors and splices shall be mechanically and electrically secure under tension and shall be of the nonbolted compression type. The tensile strength of any splice shall be not less than the rated breaking strength of the conductor. Splice materials, sleeves, fittings, and connectors shall be noncorrosive and shall not adversely affect conductors. Aluminum-composition conductors shall be wire brushed and an oxide inhibiter applied before making a compression connection. Connectors which are factory-filled with an inhibiter are acceptable. Inhibiters and compression tools shall be of types recommended by the connector

manufacturer. Primary line apparatus taps shall be by means of hot line clamps attached to compression type bail clamps (stirrups). Low-voltage connectors for copper conductors shall be of the solderless pressure type. Noninsulated connectors shall be smoothly taped to provide a waterproof insulation equivalent to the original insulation, when installed on insulated conductors. On overhead connections of aluminum and copper, the aluminum shall be installed above the copper.

3.5.3 Conductor-To-Insulator Attachments

Conductors shall be attached to insulators by means of clamps, shoes or tie wires, in accordance with the type of insulator. For insulators requiring conductor tie-wire attachments, tie-wire sizes shall be as indicated in TABLE II.

TABLE II

TIE-WIRE REQUIREMENTS

CONDUCTOR Copper (AWG)	TIE WIRE Soft-Drawn Copper (AWG)
6	8
4 and 2	6
1 through 3/0	4
4/0 and larger	2

AAC, AAAC, or ACSR (AWG)	AAAC OR AAC (AWG)
Any size	6 or 4

3.5.4 Armor Rods

Armor rods shall be provided for AAC, AAAC, and ACSR conductors. Armor rods shall be installed at supports, except armor rods will not be required at primary dead-end assemblies if aluminum or aluminum-lined zinc-coated steel clamps are used. Lengths and methods of fastening armor rods shall be in accordance with the manufacturer's recommendations. For span lengths of less than 61 m, flat aluminum armor rods may be used. Flat armor rods, not less than 762.0 micrometers by 6.4 mm (0.03 by 0.25 inch) shall be used on No. 1 AWG AAC and AAAC and smaller conductors and on No. 5 AWG ACSR and smaller conductors. On larger sizes, flat armor rods shall be not less than 1.3 by 7.6 mm (0.05 by 0.30 inches). For span lengths of 61 m or more, preformed round armor rods shall be used.

3.6 CONNECTIONS TO UTILITY LINES

The Contractor shall coordinate the work with the Contracting Officer and shall provide for final connections to the installation electric lines.

3.7 CONNECTIONS BETWEEN AERIAL AND UNDERGROUND SYSTEMS

Connections between aerial and underground systems shall be made as shown. Underground cables shall be extended up poles in conduit to cable terminations. Conduits shall be secured to poles by two-hole galvanized steel pipe straps spaced not more than 3 m apart and with one support not more than 300 mm from any bend or termination. Cables shall be supported by devices separate from the conduit or guard, near their point of exit from the riser conduit or guard. Cables guards shall be secured in accordance with the manufacturers published procedure. Risers shall be equipped with bushings to protect cables. Capnut potheads shall be used to terminate medium-voltage multiple-conductor cable.

3.8 CONNECTIONS TO BUILDINGS

3.8.1 Underground Services

Connections to various buildings and sites shall be made at the point indicated and shall be terminated at the service entrance equipment terminals. Cable pulling shall be in accordance with Section 16375, ELECTRICAL DISTRIBUTION SYSTEM, UNDERGROUND. Service entrance conduits with termination fittings and conductors within the building shall conform to the requirements of Section 16415 ELECTRICAL WORK, INTERIOR.

3.9 GROUNDING

Noncurrent-carrying metal parts of equipment and conductor assemblies, such as luminaires, medium-voltage cable terminations and other noncurrent-carrying metal items shall be grounded. Additional grounding of equipment, neutral, and surge arrester grounding systems shall be installed at poles where indicated.

3.9.1 Grounding Electrodes

Grounding electrodes shall be installed as follows:

a. Driven rod electrodes - Unless otherwise indicated, ground rods shall be located approximately 900 mm out from base of the pole and shall be driven into the earth until the tops of the rods are approximately 300 mm below finished grade. Multiple rods shall be evenly spaced at least 3 m apart and connected together 600 mm below grade with a minimum No. 6 bare copper conductor.

d. Ground Resistance - The maximum resistance of a driven ground rod shall not exceed 25 ohms under normally dry conditions. Whenever the required ground resistance is not met, provide additional electrodes interconnected with grounding conductors, to achieve the specified ground resistance. The additional electrodes will be up to three, 3 m (10 feet) rods spaced a minimum of 3 m (10 feet) apart, a single extension-type rod, 19.1 mm (3/4 inch) diameter, up to 9.1 m (30 feet) long, driven perpendicular to grade. In high ground resistance, UL listed chemically charged ground rods may be used. If the resultant resistance exceeds 25 ohms measured not less than 48 hours after rainfall, the Contracting Officer shall be notifies immediately. Connections below grade shall be fusion welded. Connections above grade shall be fusion welded or shall use UL 467 approved connectors.

3.9.2 Grounding and Bonding Connections

Connections above grade shall be made by the fusion-welding process or with bolted solderless connectors in compliance with UL 467, and those below grade shall be made by a fusion-welding process. Where grounding conductors are connected to aluminum-composition conductors, specially treated or lined copper-to-aluminum connectors suitable for this purpose shall be used.

3.9.3 Grounding Electrode Conductors

On multi-grounded circuits, as defined in IEEE C2, provide a single continuous vertical grounding electrode conductor. Neutrals, surge arresters, and equipment grounding conductors shall be bonded to this conductor. For single grounded or ungrounded systems, provide a grounding conductor for the surge arrester and equipment grounding conductors and a separate grounding conductor for the secondary neutrals. Grounding electrode conductors shall be sized as shown. Secondary system neutral conductors shall be connected directly to the transformer neutral bushings, then connected with a neutral bonding jumper between the transformer neutral bushing and the vertical grounding electrode conductor, as shown. Grounding electrode conductors shall be stapled to wood poles at intervals not exceeding 600 mm. On metal poles, a preformed galvanized steel strap, 15.9 mm (5/8 inch) wide by 0.853 (22 gauge) minimum by length, secured by a preformed locking method standard with the manufacturer, shall be used to support a grounding electrode conductor installation on the pole and spaced at intervals not exceeding 1.5 m with one band not more than 75 mm from each end of the vertical grounding electrode conductor. Bends greater than 45 degrees in grounding electrode conductor are not permitted.

3.10 FIELD TESTING

3.10.1 General

Field testing shall be performed in the presence of the Contracting Officer. The Contractor shall notify the Contracting Officer 14 days prior to conducting tests. The Contractor shall furnish materials, labor, and equipment necessary to conduct field tests. The Contractor shall perform tests and inspections recommended by the manufacturer unless specifically waived by the Contracting Officer. The Contractor shall maintain a written record of tests which includes date, test performed, personnel involved, devices tested, serial number and name of test equipment, and test results. Field reports will be signed and dated by the Contractor.

3.10.2 Safety

The Contractor shall provide and use safety devices such as rubber gloves, protective barriers, and danger signs to protect and warn personnel in the test vicinity. The Contractor shall replace any devices or equipment which are damaged due to improper test procedures or handling.

3.10.3 Ground-Resistance Tests

The resistance of each grounding electrode system shall be measured using the fall-of-potential method defined in IEEE Std 81. Ground resistance measurements shall be made before the electrical distribution system is energized and shall be made in normally dry conditions not less than 48 hours after the last rainfall. Resistance measurements of separate grounding electrode systems shall be made before the systems are bonded together below grade. The combined resistance of separate systems may be

used to meet the required resistance, but the specified number of electrodes shall be provided.

3.10.4 Operating Tests

After the installation is completed, and at such time as the Contracting Officer may direct, the Contractor shall conduct operating tests for approval. The equipment shall be demonstrated to operate in accordance with the specified requirements. An operating test report shall be submitted in accordance with paragraph SUBMITTALS.

3.11 ACCEPTANCE

Final acceptance of the facility will not be given until the Contractor has successfully completed all tests and after all defects in installation, material or operation have been corrected.

-- End of Section --

SECTION TABLE OF CONTENTS

DIVISION 16 - ELECTRICAL

SECTION 16375

ELECTRICAL DISTRIBUTION SYSTEM, UNDERGROUND

PART 1 GENERAL

1.1 REFERENCES
1.2 GENERAL REQUIREMENTS
1.2.1 Terminology
1.2.2 Service Conditions
1.2.3 Year 2000 Compliant Equipment
1.3 SUBMITTALS
1.4 DELIVERY, STORAGE, AND HANDLING
1.5 EXTRA MATERIALS

PART 2 PRODUCTS

2.1 STANDARD PRODUCT
2.2 NAMEPLATES
2.2.1 General
2.2.2 Liquid-Filled Transformer Nameplates
2.3 CORROSION PROTECTION
2.3.1 Aluminum Materials
2.3.2 Ferrous Metal Materials
2.3.2.1 Hardware
2.3.2.2 Equipment
2.3.3 Finishing
2.4 CABLES
2.4.1 Conductor Material
2.4.2 Medium-Voltage Cables
2.4.2.1 General
2.4.2.2 Insulation
2.4.2.3 Jackets
2.4.2.4 Neutrals
2.4.2.5 Shielding
2.4.2.6 Ratings
2.4.3 Low-Voltage Cables
2.4.3.1 In Duct
2.5 CABLE JOINTS, TERMINATIONS, AND CONNECTORS
2.5.1 Medium-Voltage Cable Joints
2.5.2 Medium-Voltage Separable Insulated Connectors
2.5.3 Low-Voltage Cable Splices
2.5.4 Terminations
2.5.4.1 Factory Preformed Type
2.5.4.2 Taped Terminations
2.6 CONDUIT AND DUCTS
2.6.1 Metallic Conduit
2.6.2 Nonmetallic Ducts
2.6.2.1 Concrete Encased Ducts
2.6.2.2 Direct Burial

2.6.3 Conduit Sealing Compound
2.7 HANDHOLES AND PULLBOXES
2.8 POLES AND HARDWARE
2.9 TRANSFORMERS
2.9.1 Pad-Mounted Transformers
2.9.1.1 High-Voltage Compartments
2.9.1.2 Load-Break Switch
2.9.1.3 Transformer Tank Sections
2.9.1.4 Low-Voltage Cable Compartments
2.9.1.5 Accessories
2.10 PROTECTIVE DEVICES
2.10.1 Fuses, Medium-Voltage, Including Current-Limiting
2.10.1.1 Construction
2.10.1.2 E-Rated, Current-Limiting Power Fuses
2.10.1.3 C-Rated, Current-Limiting Power Fuses
2.10.2 Fuses, Low-Voltage, Current-Limiting
2.10.2.1 Low Voltage Fuses
2.10.2.2 Cartridge Fuses
2.10.2.3 Transformer Circuit Fuses
2.11 GROUNDING AND BONDING
2.11.1 Driven Ground Rods
2.11.2 Grounding Conductors
2.12 CONCRETE AND REINFORCEMENT
2.13 CABLE FIREPROOFING SYSTEMS
2.13.1 Fireproof Coating
2.13.2 Fireproofing Tape
2.13.3 Plastic Tape
2.14 LIQUID DIELECTRICS
2.15 FACTORY TESTS

PART 3 EXECUTION

3.1 GENERAL INSTALLATION REQUIREMENTS
3.1.1 Conformance to Codes
3.1.2 Verification of Dimensions
3.2 CABLE INSTALLATION
3.2.1 Cable Installation Plan and Procedure
3.2.1.1 Cable Inspection
3.2.1.2 Duct Cleaning
3.2.1.3 Duct Lubrication
3.2.1.4 Cable Installation
3.2.1.5 Cable Installation Plan
3.2.2 Duct Line
3.2.3 Electric Handholes
3.3 CABLE JOINTS
3.4 DUCT LINES
3.4.1 Requirements
3.4.2 Treatment
3.4.3 Concrete Encasement
3.4.4 Nonencased Direct-Burial
3.4.5 Installation of Couplings
3.4.5.1 Plastic Duct
3.4.6 Duct Line Markers
3.5 HANDHOLES, AND PULLBOXES
3.5.1 General
3.5.2 Communication Handholes
3.5.3 Pullboxes
3.5.4 Ground Rods
3.6 PAD-MOUNTED EQUIPMENT INSTALLATION

3.6.1 Concrete Pads
3.6.1.1 Construction
3.6.1.2 Concrete and Reinforcement
3.6.1.3 Sealing
3.7 CONNECTIONS BETWEEN AERIAL AND UNDERGROUND SYSTEMS
3.8 CONNECTIONS TO BUILDINGS
3.9 GROUNDING
3.9.1 Grounding Electrodes
3.9.2 Grounding and Bonding Connections
3.9.3 Grounding and Bonding Conductors
3.9.4 Surge Arrester Grounding
3.9.5 Handhole, or Concrete Pullbox Grounding
3.9.6 Riser Pole Grounding
3.10 FIELD TESTING
3.10.1 General
3.10.2 Safety
3.10.3 Ground-Resistance Tests
3.10.4 Ground-Mat Connection Inspection
3.10.5 Medium-Voltage Cable Test
3.10.6 Low-Voltage Cable Test
3.10.7 Liquid-Filled Transformer Tests
3.10.8 Pre-Energization Services
3.10.9 Operating Tests
3.11 MANUFACTURER'S FIELD SERVICE
3.11.1 Onsite Training
3.11.2 Installation Engineer
3.12 ACCEPTANCE

-- End of Section Table of Contents --

SECTION 16375

ELECTRICAL DISTRIBUTION SYSTEM, UNDERGROUND

PART 1 GENERAL

1.1 REFERENCES

The publications listed below form a part of this specification to the extent referenced. The publications are referred to in the text by basic designation only.

AMERICAN NATIONAL STANDARDS INSTITUTE (ANSI)

ANSI C37.46	(1981; R 1992) Power Fuses and Fuse Disconnecting Switches
ANSI C57.12.21	(1980) Requirements for Pad-Mounted, Compartmental-Type, Self-Cooled, Single-Phase Distribution Transformers with High-Voltage Bushings; (High-Voltage, 34 500 Grd Y/19 920 Volts and Below; Low-Voltage, 240/120; 167 kVA and Smaller)
ANSI C57.12.26	(1993) Pad-Mounted Compartmental-Type, Self-Cooled, Three-Phase Distribution Transformers for Use with Separable Insulated High-Voltage Connectors, High-Voltage, 34 500 Grd Y/19 920 Volts and Below; 2500 kVa and Smaller
ANSI C80.1	(1990) Rigid Steel Conduit - Zinc Coated
ANSI C119.1	(1986) Sealed Insulated Underground Connector Systems Rated 600 Volts
ANSI O5.1	(1992) Specifications and Dimensions for Wood Poles

AMERICAN SOCIETY FOR TESTING AND MATERIALS (ASTM)

ASTM A 48	(1994a) Gray Iron Castings
ASTM A 123	(1989a) Zinc (Hot-Dip Galvanized) Coatings on Iron and Steel Products
ASTM A 153	(1996) Zinc Coating (Hot-Dip) on Iron and Steel Hardware
ASTM B 8	(1993) Concentric-Lay-Stranded Copper Conductors, Hard, Medium-Hard, or Soft
ASTM B 117	(1994) Operating Salt Spray (Fog) Testing Apparatus
ASTM C 478	(1994) Precast Reinforced Concrete Manhole

	Sections
ASTM D 1654	(1992) Evaluation of Painted or Coated Specimens Subjected to Corrosive Environments

ASSOCIATION OF EDISON ILLUMINATING COMPANIES (AEIC)

AEIC CS5	(1994) Specifications for Cross-linked Polyethylene Insulated Shielded Power Cables Rated 5 Through 46 kV
AEIC CS6	(1987; Rev Mar 1989) Ethylene Propylene Rubber Insulated Shielded Power Cables Rated 5 Through 69 kV

FACTORY MUTUAL ENGINEERING AND RESEARCH (FM)

FM P7825	(1995; Supple I; Supple II; Supple III) Approval Guide

INSTITUTE OF ELECTRICAL AND ELECTRONICS ENGINEERS (IEEE)

IEEE C2	(1997) National Electrical Safety Code
IEEE C57.12.00	(1993) IEEE Standard General Requirements for Liquid-Immersed Distribution, Power, and Regulating Transformers
IEEE C57.98	(1993) Guide for Transformer Impulse Tests
IEEE Std 48	(1996) Standard Test Procedures and Requirements for Alternating-Current Cable Terminations 2.5 kV through 765 kV
IEEE Std 81	(1983) Guide for Measuring Earth Resistivity, Ground Impedance, and Earth Surface Potentials of a Ground System (Part 1)
IEEE Std 100	(1992) IEEE Standard Dictionary of Electrical and Electronics Terms
IEEE Std 386	(1995) Separable Insulated Connector Systems for Power Distribution Systems Above 600V
IEEE Std 404	(1993) Cable Joints for Use with Extruded Dielectric Cable Rated 5000 V through 46 000 V and Cable Joints for Use with Laminated Dielectric Cable Rated 2500 V Through 500 000 V
IEEE Std 592	(1990) Exposed Semiconducting Shields on Premolded High Voltage Cable Joints and Separable Insulated Connectors

NATIONAL ELECTRICAL MANUFACTURERS ASSOCIATION (NEMA)

NEMA FB 1	(1993) Fittings, Cast Metal Boxes and Conduit Bodies for Conduit and Cable Assemblies
NEMA FU 1	(1986) Low Voltage Cartridge Fuses
NEMA TC 5	(1990) Corrugated Polyolefin Coilable Plastic Utilities Duct
NEMA TC 6	(1990) PVC and ABS Plastic Utilities Duct for Underground Installation
NEMA TC 7	(1990) Smooth-Wall Coilable Polyethylene Electrical Plastic Duct
NEMA WC 7	(1993) Cross-Linked-Thermosetting-Polyethylene-Insulated Wire and Cable for the Transmission and Distribution of Electrical Energy
NEMA WC 8	(1993) Ethylene-Propylene-Rubber-Insulated Wire and Cable for the Transmission and Distribution of Electrical Energy

NATIONAL FIRE PROTECTION ASSOCIATION (NFPA)

NFPA 70	(1996) National Electrical Code

UNDERWRITERS LABORATORIES (UL)

UL 6	(1993; Rev March 96) Rigid Metal Conduit
UL 198E	(1988; Rev Jul 1988) Class R Fuses
UL 467	(1993; Rev thru Aug 1996) Grounding and Bonding Equipment
UL 486A	(1991; Rev Oct 1991) Wire Connectors and Soldering Lugs for Use with Copper Conductors
UL 486B	(1991; Rev thru Oct 1996) Wire Connectors for Use with Aluminum Conductors
UL 510	(1994) Insulating Tape
UL 514A	(1996) Metallic Outlet Boxes
UL 651	(1995) Schedule 40 and 80 Rigid PVC Conduit
UL 1242	(1996) Intermediate Metal Conduit

1.2 GENERAL REQUIREMENTS

1.2.1 Terminology

Terminology used in this specification is as defined in IEEE Std 100.

1.2.2 Service Conditions

Items provided under this section shall be specifically suitable for the following service conditions:

a. Altitude 1433m
b. Ambient Temperature -10 to 45 degrees C
c. Seismic Zone 3

1.2.3 Year 2000 Compliant Equipment

Where applicable, all equipment specified shall be Year 2000 compliant and shall be able to accurately process date/time data (including, but not limited to, calculating, comparing, and sequencing) from, into, and between the twentieth and twenty-first centuries, including leap year calculations, when used in accordance with the product documentation provided by the contractor, provided that all products (e.g. hardware, software, firmware) used in combination with other information technology, shall accurately process date/time data if the other information technology properly exchanges date/time data with it.

1.3 SUBMITTALS

Governmental approval is required for submittals with a "GA" designation; submittals having an "FIO" designation are for information only. The following shall be submitted in accordance with Section 01330 SUBMITTAL PROCEDURES:

SD-01 Data

Manufacturer's Catalog Data; FIO.

Catalog cuts, brochures, circulars, specifications, product data, and printed information in sufficient detail and scope to verify compliance with the requirements of the contract documents.

Material, Equipment, and Fixture Lists; FIO.

A complete itemized listing of equipment and materials proposed for incorporation into the work. Each entry shall include an item number, the quantity of items proposed, and the name of the manufacturer of each such item.

Installation Procedures; FIO.

As a minimum, installation procedures for transformers, substations, switchgear, and medium-voltage cable terminations and splices.

Procedures shall include cable pulling plans, diagrams, instructions, and precautions required to install, adjust, calibrate, and test the devices and equipment.

SD-04 Drawings

Electrical Distribution System; FIO.

Detail drawings consisting of equipment drawings, illustrations, schedules, instructions, diagrams manufacturers standard installation drawings and other information necessary to define the installation and enable the

Government to check conformity with the requirements of the contract drawings.

If departures from the contract drawings are deemed necessary by the Contractor, complete details of such departures shall be included with the detail drawings. Approved departures shall be made at no additional cost to the Government.

Detail drawings shall show how components are assembled, function together and how they will be installed on the project. Data and drawings for component parts of an item or system shall be coordinated and submitted as a unit. Data and drawings shall be coordinated and included in a single submission. Multiple submissions for the same equipment or system are not acceptable except where prior approval has been obtained from the Contracting Officer. In such cases, a list of data to be submitted later shall be included with the first submission. Detail drawings shall consist of the following:

a. Detail drawings showing physical arrangement, construction details, connections, finishes, materials used in fabrication, provisions for conduit or busway entrance, access requirements for installation and maintenance, physical size, electrical characteristics, foundation and support details, and equipment weight. Drawings shall be drawn to scale and/or dimensioned. All optional items shall be clearly identified as included or excluded.

b. Internal wiring diagrams of equipment showing wiring as actually provided for this project. External wiring connections shall be clearly identified.

Detail drawings shall as a minimum depict the installation of the following items:

a. Medium-voltage cables and accessories including cable installation plan.
b. Transformers.

As-Built Drawings; FIO.

The as-built drawings shall be a record of the construction as installed. The drawings shall include the information shown on the contract drawings as well as deviations, modifications, and changes from the contract drawings, however minor. The as-built drawings shall be a full sized set of prints marked to reflect deviations, modifications, and changes. The as-built drawings shall be complete and show the location, size, dimensions, part identification, and other information. Additional sheets may be added. The as-built drawings shall be jointly inspected for accuracy and completeness by the Contractor's quality control representative and by the Contracting Officer prior to the submission of each monthly pay estimate. Upon completion of the work, the Contractor shall provide three full sized sets of the marked prints to the Contracting Officer for approval. If upon review, the as-built drawings are found to contain errors and/or omissions, they will be returned to the Contractor for correction. The Contractor shall correct and return the as-built drawings to the Contracting Officer for approval within 10 calendar days from the time the drawings are returned to the Contractor.

SD-09 Reports

Factory Test; FIO.

Certified factory test reports shall be submitted when the manufacturer performs routine factory tests, including tests required by standards listed in paragraph REFERENCES. Results of factory tests performed shall be certified by the manufacturer, or an approved testing laboratory, and submitted within 7 days following successful completion of the tests. The manufacturer's pass-fail criteria for tests specified in paragraph FIELD TESTING shall be included.

Field Testing; FIO.

A proposed field test plan, 20 days prior to testing the installed system. No field test shall be performed until the test plan is approved. The test plan shall consist of complete field test procedures including tests to be performed, test equipment required, and tolerance limits.

Test Reports; FIO.

Six copies of the information described below in 215.9 by 279.4 mm (8-1/2 by 11 inch) binders having a minimum of three rings, including a separate section for each test. Sections shall be separated by heavy plastic dividers with tabs.

a. A list of equipment used, with calibration certifications.
b. A copy of measurements taken.
c. The dates of testing.
d. The equipment and values to be verified.
e. The condition specified for the test.
f. The test results, signed and dated.
g. A description of adjustments made.

Cable Installation Reports; FIO.

Six copies of the information described below in 215.9 by 279.4 mm (8-1/2 by 11 inch) binders having a minimum of three rings from which material may readily be removed and replaced, including a separate section for each cable pull. Sections shall be separated by heavy plastic dividers with tabs, with all data sheets signed and dated by the person supervising the pull.

a. Site layout drawing with cable pulls numerically identified.
b. A list of equipment used, with calibration certifications. The manufacturer and quantity of lubricant used on pull.
c. The cable manufacturer and type of cable.
d. The dates of cable pulls, time of day, and ambient temperature.
e. The length of cable pull and calculated cable pulling tensions.
f. The actual cable pulling tensions encountered during pull.

SD-13 Certificates

Materials and Equipment; FIO.

Where materials or equipment are specified to conform to the standards of the Underwriters Laboratories (UL) or to be constructed or tested, or both, in accordance with the standards of the American National Standards Institute (ANSI), the Institute of Electrical and Electronics Engineers (IEEE), or the National Electrical Manufacturers Association (NEMA), the Contractor shall submit proof that the items provided conform to such

requirements. The label of, or listing by, UL will be acceptable as evidence that the items conform. Either a certification or a published catalog specification data statement, to the effect that the item is in accordance with the referenced ANSI or IEEE standard, will be acceptable as evidence that the item conforms. A similar certification or published catalog specification data statement to the effect that the item is in accordance with the referenced NEMA standard, by a company listed as a member company of NEMA, will be acceptable as evidence that the item conforms. In lieu of such certification or published data, the Contractor may submit a certificate from a recognized testing agency equipped and competent to perform such services, stating that the items have been tested and that they conform to the requirements listed, including methods of testing of the specified agencies. Compliance with above-named requirements does not relieve the Contractor from compliance with any other requirements of the specifications.

Cable Splicer Qualification; FIO.

A certification that contains the names and the qualifications of people recommended to perform the splicing and termination of medium-voltage cables approved for installation under this contract. The certification shall indicate that any person recommended to perform actual splicing and terminations has been adequately trained in the proper techniques and have had at least three recent years of experience in splicing and terminating the same or similar types of cables approved for installation. In addition, any person recommended by the Contractor may be required to perform a practice splice and termination, in the presence of the Contracting Officer, before being approved as a qualified installer of medium-voltage cables. If that additional requirement is imposed, the Contractor shall provide short sections of the approved types of cables along with the approved type of splice and termination kits, and detailed manufacturer's instruction for the proper splicing and termination of the approved cable types.

Cable Installer Qualifications; FIO.

The Contractor shall provide at least one onsite person in a supervisory position with a documentable level of competency and experience to supervise all cable pulling operations. A resume shall be provided showing the cable installers' experience in the last three years, including a list of references complete with points of contact, addresses and telephone numbers.

SD-19 OPERATION AND MAINTENANCE MANUALS

Electrical Distribution System; FIO.

Six copies of operation and maintenance manuals, within 7 calendar days following the completion of tests and including assembly, installation, operation and maintenance instructions, spare parts data which provides supplier name, current cost, catalog order number, and a recommended list of spare parts to be stocked. Manuals shall also include data outlining detailed procedures for system startup and operation, and a troubleshooting guide which lists possible operational problems and corrective action to be taken. A brief description of all equipment, basic operating features, and routine maintenance requirements shall also be included. Documents shall be bound in a binder marked or identified on the spine and front cover. A table of contents page shall be included and marked with pertinent contract information and contents of the manual. Tabs shall be provided to separate

different types of documents, such as catalog ordering information, drawings, instructions, and spare parts data. Index sheets shall be provided for each section of the manual when warranted by the quantity of documents included under separate tabs or dividers.

Three additional copies of the instructions manual shall be provided within 30 calendar days following the manuals.

1.4 DELIVERY, STORAGE, AND HANDLING

Devices and equipment shall be visually inspected by the Contractor when received and prior to acceptance from conveyance. Stored items shall be protected from the environment in accordance with the manufacturer's published instructions. Damaged items shall be replaced. Oil filled transformers and switches shall be stored in accordance with the manufacturer's requirements. Wood poles held in storage for more than 2 weeks shall be stored in accordance with ANSI O5.1. Handling of wood poles shall be in accordance with ANSI O5.1, except that pointed tools capable of producing indentations more than 25 mm in depth shall not be used.

1.5 EXTRA MATERIALS

One additional spare fuse or fuse element for each furnished fuse or fuse element shall be delivered to the contracting officer when the electrical system is accepted. Two complete sets of all special tools required for maintenance shall be provided, complete with a suitable tool box. Special tools are those that only the manufacturer provides, for special purposes (to access compartments, or operate, adjust, or maintain special parts).

PART 2 PRODUCTS

2.1 STANDARD PRODUCT

Material and equipment shall be the standard product of a manufacturer regularly engaged in the manufacture of the product and shall essentially duplicate items that have been in satisfactory use for at least 2 years prior to bid opening. Items of the same classification shall be identical including equipment, assemblies, parts, and components.

2.2 NAMEPLATES

2.2.1 General

Each major component of this specification shall have the manufacturer's name, address, type or style, model or serial number, and catalog number on a nameplate securely attached to the equipment. Nameplates shall be made of noncorrosive metal. Equipment containing liquid dielectrics shall have the type of dielectric on the nameplate. As a minimum, nameplates shall be provided for transformers, circuit breakers, meters, switches, and switchgear.

2.2.2 Liquid-Filled Transformer Nameplates

Power transformers shall be provided with nameplate information in accordance with IEEE C57.12.00. Nameplates shall indicate the number of liters and composition of liquid-dielectric, and shall be permanently marked with a statement that the transformer dielectric to be supplied is non-polychlorinated biphenyl. If transformer nameplate is not so marked, the Contractor shall furnish manufacturer's certification for each

transformer that the dielectric is non-PCB classified, with less than2 ppm PCB content in accordance with paragraph LIQUID DIELECTRICS. Certifications shall be related to serial numbers on transformer nameplates. Transformer dielectric exceeding the 2 ppm PCB content or transformers without certification will be considered as PCB insulated and will not be accepted.

2.3 CORROSION PROTECTION

2.3.1 Aluminum Materials

Aluminum shall not be used.

2.3.2 Ferrous Metal Materials

2.3.2.1 Hardware

Ferrous metal hardware shall be hot-dip galvanized in accordance with ASTM A 153 and ASTM A 123.

2.3.2.2 Equipment

Equipment and component items, including but not limited to transformer stations and ferrous metal luminaries not hot-dip galvanized or porcelain enamel finished, shall be provided with corrosion-resistant finishes which shall withstand 120 hours of exposure to the salt spray test specified in ASTM B 117 without loss of paint or release of adhesion of the paint primer coat to the metal surface in excess of 1.6 mm (1/16 inch) from the test mark. The scribed test mark and test evaluation shall be in accordance with ASTM D 1654 with a rating of not less than 7 in accordance with TABLE 1, (procedure A). Cut edges or otherwise damaged surfaces of hot-dip galvanized sheet steel or mill galvanized sheet steel shall be coated with a zinc rich paint conforming to the manufacturer's standard.

2.3.3 Finishing

Painting required for surfaces not otherwise specified and finish painting of items only primed at the factory shall be as specified in Section 09900 PAINTING, GENERAL.

2.4 CABLES

Cables shall be single conductor type unless otherwise indicated.

2.4.1 Conductor Material

Underground cables shall be of soft drawn copper conductor material.

2.4.2 Medium-Voltage Cables

2.4.2.1 General

Medium voltage cables shall conform to the requirements of NEMA WC 8 for cables utilizing ethylene-propylene-rubber (EPR) insulation. Cables shall be in accordance with the requirements of NFPA 70. Single conductor cable shall be provided except as otherwise indicated.

2.4.2.2 Insulation

Cables shall utilize ethylene-propylene-rubber (EPR) insulation. Cables shall be provided with 133 percent insulation level.

2.4.2.3 Jackets

Cables shall be provided with a nonmetallic jacket. Cables do not require termite-resistant nylon jacket.

2.4.2.4 Neutrals

Neutral conductors of grounded neutral systems except for concentric neutral cables shall be of the same insulation material as phase conductors, except that a 600-volt insulation rating is acceptable.

2.4.2.5 Shielding

Cables rated for above 2 kV shall have both conductor and insulation shielding for each phase.

2.4.2.6 Ratings

Medium-voltage cables shall be rated for a circuit voltage of 15 kV.

2.4.3 Low-Voltage Cables

Cables shall be rated 600 volts and shall conform to the requirements of NFPA 70. Cables shall utilize or ethylene-propylene-rubber (EPR) insulation and shall conform to the requirements of NEMA WC 8.

2.4.3.1 In Duct

Cables shall be single-conductor cable, Type RHW, THW, THWN, USE, or XHHW in accordance with NFPA 70. Cables in factory-installed, coilable-plastic-duct assemblies shall conform to NEMA TC 5 or NEMA TC 7.

2.5 CABLE JOINTS, TERMINATIONS, AND CONNECTORS

2.5.1 Medium-Voltage Cable Joints

Medium-voltage cable joints shall comply with IEEE Std 404 and IEEE Std 592. Medium-voltage cable terminations shall comply with IEEE Std 48. Joints shall be the standard products of a manufacturer and shall be either of the factory preformed type or of the kit type containing tapes and other required parts. Joints shall have ratings not less than the ratings of the cables on which they are installed. Splice kits may be of the heat-shrinkable type for voltages up to 15 kV, of the premolded splice and connector type, the conventional taped type, or the resin pressure-filled overcast taped type for voltages up to 35 kV; except that for voltages of 7.5 kV or less a resin pressure-filled type utilizing a plastic-tape mold is acceptable. Joints used in handholes, vaults and pull boxes shall be certified by the manufacturer for waterproof, submersible applications.

2.5.2 Medium-Voltage Separable Insulated Connectors

Separable insulated connectors shall comply with IEEE Std 386 and IEEE Std 592 and shall be of suitable construction or standard splice kits shall be used. Separable insulated connectors are acceptable for voltages up to 35 kV. Connectors shall be of the loadbreak type as indicated, of suitable construction for the application and the type of cable connected, and shall

include cable shield adaptors. Separable insulated connectors shall not be used as substitutes for conventional permanent splices. External clamping points and test points shall be provided.

2.5.3 Low-Voltage Cable Splices

Low-voltage cable splices and terminations shall be rated at not less than 600 Volts. Splices in conductors No. 10 AWG and smaller shall be made with an insulated, solderless, pressure type connector, conforming to the applicable requirements of UL 486A. Splices in conductors No. 8 AWG and larger shall be made with noninsulated, solderless, pressure type connector, conforming to the applicable requirements of UL 486A and UL 486B. Splices shall then be covered with an insulation and jacket material equivalent to the conductor insulation and jacket. Splices below grade or in wet locations shall be sealed type conforming to ANSI C119.1 or shall be waterproofed by a sealant-filled, thick wall, heat shrinkable, thermosetting tubing or by pouring a thermosetting resin into a mold that surrounds the joined conductors.

2.5.4 Terminations

Terminations shall be in accordance with IEEE Std 48, Class 1 or Class 2; of the molded elastomer, wet-process porcelain, prestretched elastomer, heat-shrinkable elastomer, or taped type. Acceptable elastomers are track-resistant silicone rubber or track-resistant ethylene propylene compounds, such as ethylene propylene rubber or ethylene propylene diene monomer. Separable insulated connectors may be used for apparatus terminations, when such apparatus is provided with suitable bushings. Terminations shall be of the outdoor type, except that where installed inside outdoor equipment housings which are sealed against normal infiltration of moisture and outside air, indoor, Class 2 terminations are acceptable. Class 3 terminations are not acceptable. Terminations, where required, shall be provided with mounting brackets suitable for the intended installation and with grounding provisions for the cable shielding, metallic sheath, and armor.

2.5.4.1 Factory Preformed Type

Molded elastomer, wet-process porcelain, prestretched, and heat-shrinkable terminations shall utilize factory preformed components to the maximum extent practicable rather than tape build-up. Terminations shall have basic impulse levels as required for the system voltage level.

2.5.4.2 Taped Terminations

Taped terminations shall use standard termination kits providing terminal connectors, field-fabricated stress cones, and rain hoods. Terminations shall be at least 510 long from the end of the tapered cable jacket to the start of the terminal connector, or not less than the kit manufacturer's recommendations, whichever is greater.

2.6 CONDUIT AND DUCTS

Duct lines shall be concrete-encased, thin-wall type. Duct lines shall be concrete-encased, thin-wall type for duct lines between handholes and for other medium-voltage lines. Low-voltage lines or communication lines run under non-paved, non-traffic areas may be direct-burial, thick-wall type.

2.6.1 Metallic Conduit

Intermediate metal conduit shall comply with UL 1242. Rigid galvanized steel conduit shall comply with UL 6 and ANSI C80.1. Metallic conduit fittings and outlets shall comply with UL 514A and NEMA FB 1.

2.6.2 Nonmetallic Ducts

2.6.2.1 Concrete Encased Ducts

UL 651 Schedule 40 or NEMA TC 6 Type EB.

2.6.2.2 Direct Burial

UL 651 Schedule 40 or NEMA TC 6 Type DB.

2.6.3 Conduit Sealing Compound

Compounds for sealing ducts and conduit shall have a putty-like consistency workable with the hands at temperatures as low as 2 degrees C (35 degrees F), shall neither slump at a temperature of 150 degrees C (300 degrees F), nor harden materially when exposed to the air. Compounds shall adhere to clean surfaces of fiber or plastic ducts; metallic conduits or conduit coatings; concrete, masonry, or lead; any cable sheaths, jackets, covers, or insulation materials; and the common metals. Compounds shall form a seal without dissolving, noticeably changing characteristics, or removing any of the ingredients. Compounds shall have no injurious effect upon the hands of workmen or upon materials.

2.7 HANDHOLES AND PULLBOXES

Handholes and pullboxes shall be as indicated. Strength of handholes and pullboxes and their frames and covers shall conform to the requirements of IEEE C2. Precast-concrete handholes shall have the required strength established by ASTM C 478. Frames and covers shall be made of gray cast iron and a machine-finished seat shall be provided to ensure a matching joint between frame and cover. Cast iron shall comply with ASTM A 48, Class 30B, minimum. Handholes for low voltage cables installed in parking lots, sidewalks, and turfed areas shall be fabricated from an aggregate consisting of sand and with continuous woven glass strands having an overall compressive strength of at least 69 MPa (10,000 psi) and a flexural strength of at least 34.5 MPa (5000 psi). Pullbox and handhole covers in sidewalks, and turfed areas shall be of the same material as the box. Concrete pullboxes shall consist of precast reinforced concrete boxes, extensions, bases, and covers.

2.8 POLES AND HARDWARE

Poles and hardware shall be in accordance with Section 16370 ELECTRICAL DISTRIBUTION SYSTEM, AERIAL.

2.9 TRANSFORMERS

Transformers shall be of the outdoor type having the ratings and arrangements indicated. Medium-voltage ratings of cable terminations shall be 15 kV between phases for 133 percent insulation level.

2.9.1 Pad-Mounted Transformers

Pad-mounted transformers shall comply with ANSI C57.12.26 and shall be of

the radial type. Pad-mounted transformer stations shall be assembled and coordinated by one manufacturer and each transformer station shall be shipped as a complete unit so that field installation requirements are limited to mounting each unit on a concrete pad and connecting it to primary and secondary lines. Stainless steel pins and hinges shall be provided. Barriers shall be provided between high- and low-voltage compartments. High-voltage compartment doors shall be interlocked with low-voltage compartment doors to prevent access to any high-voltage section unless its associated low-voltage section door has first been opened. Compartments shall be sized to meet the specific dimensional requirements of ANSI C57.12.26. Pentahead locking bolts shall be provided with provisions for a padlock.

2.9.1.1 High-Voltage Compartments

The high-voltage compartment shall be dead-front construction. Primary switching and protective devices shall include loadbreak switching, drawout, dry-well-mounted, current-limiting fuses, medium-voltage separable loadbreak connectors, universal bushing wells and inserts. Fuses shall comply with the requirements of paragraph PROTECTIVE DEVICES. The switch shall be mounted inside transformer tank with switch operating handle located in high-voltage compartment and equipped with metal loop for hook stick operation. Fuses shall be interlocked with switches so that fuses can be removed only when the associated switch is in the "OPEN" position. Adjacent to medium-voltage cable connections, a nameplate or equivalent stencilled inscription shall be provided inscribed "DO NOT OPEN CABLE CONNECTORS UNLESS SWITCH IS OPEN."

2.9.1.2 Load-Break Switch

Radial-feed oil-immersed type rated at 15 kV, 95 kV BIL, with a continuous current rating and load-break rating of 200 ampere, and a make-and-latch rating of 10,000 rms amperes symmetrical. Locate the switch handle in the high-voltage compartment.

2.9.1.3 Transformer Tank Sections

Transformers shall comply with IEEE C57.12.00, ANSI C57.12.21, and ANSI C57.12.26 and shall be of the mineral oil-insulated type or dimethyl silicone liquid. Transformers shall be suitable for outdoor use and shall have 2 separate windings per phase. Standard NEMA primary taps shall be provided. Where primary taps are not specified, 4, 2-1/2 percent rated kVA high-voltage taps shall be provided 2 above and 2 below rated, primary voltage. Operating handles for primary tap changers for de-energized operation shall be located within high-voltage compartments, externally to transformer tanks. Adjacent to the tap changer operating handle, a nameplate or equivalent stenciled inscription shall be provided and inscribed "DO NOT OPERATE UNDER LOAD." Transformer ratings at 60 Hz shall be as indicated.

2.9.1.4 Low-Voltage Cable Compartments

Neutrals shall be provided with fully-insulated bushings. Clamp type cable terminations, suitable for copper conductors entering from below, shall be provided as necessary.

2.9.1.5 Accessories

High-voltage warning signs shall be permanently attached to each side of

transformer stations. Voltage warning signs shall comply with IEEE C2. Copper-faced steel or stainless steel ground connection pads shall be provided in both the high- and low-voltage compartments. Dial-type thermometer, liquid-level gauge, and drain valve with built-in sampling device shall be provided for each transformer station. Insulated-bushing-type parking stands shall be provided adjacent to each separable load-break elbow to provide for cable isolation during sectionalizing operations.

2.10 PROTECTIVE DEVICES

2.10.1 Fuses, Medium-Voltage, Including Current-Limiting

2.10.1.1 Construction

Units shall be suitable for outdoor use. Fuses shall have integral blown-fuse indicators. All ratings shall be clearly visible.

2.10.1.2 E-Rated, Current-Limiting Power Fuses

E-rated, current-limiting, power fuses shall conform to ANSI C37.46.

2.10.1.3 C-Rated, Current-Limiting Power Fuses

C-rated, current-limiting power fuses shall open in 1000 seconds at currents between 170 and 240 percent of the C rating.

2.10.2 Fuses, Low-Voltage, Current-Limiting

2.10.2.1 Low Voltage Fuses

Low-voltage fuses shall conform to NEMA FU 1. Time delay and nontime delay options shall be as specified. Equipment provided under this contract shall be provided with a complete set of properly rated fuses when the equipment manufacturer utilizes fuses in the manufacture of the equipment, or if current-limiting fuses are required to be installed to limit the ampere-interrupting capacity of circuit breakers or equipment to less than the maximum available fault current at the location of the equipment to be installed. Fuses shall have a voltage rating of not less than the phase-to-phase circuit voltage, and shall have the time-current characteristics required for effective power system coordination.

2.10.2.2 Cartridge Fuses

Cartridge fuses, current-limiting type, Class RK1 or RK5 shall have tested interrupting capacity not less than 100,000 amperes. Fuse holders shall be the type that will reject Class H fuses.

a. Class R fuses shall conform to UL 198E.

2.10.2.3 Transformer Circuit Fuses

Transformer circuit fuses shall be Class RK1 or RK5, current-limiting, time-delay with 200,000 amperes interrupting capacity.

2.11 GROUNDING AND BONDING

2.11.1 Driven Ground Rods

Ground rods shall be copper-clad steel conforming to UL 467 not less than 19 mm (3/4 inch) in diameter by 3.1 m (10 feet) in length.

2.11.2 Grounding Conductors

Grounding conductors shall be bare, except where installed in conduit with associated phase conductors. Insulated conductors shall be of the same material as phase conductors and green color-coded, except that conductors shall be rated no more than 600 volts. Bare conductors shall be ASTM B 8 soft-drawn unless otherwise indicated. Aluminum is not acceptable.

2.12 CONCRETE AND REINFORCEMENT

Concrete work shall have minimum 20 MPa compressive strength and conform to the requirements of Section 03300 CAST-IN-PLACE STRUCTURAL CONCRETE. Concrete reinforcing shall be as specified in Section 03200 CONCRETE REINFORCEMENT.

2.13 CABLE FIREPROOFING SYSTEMS

Cable fireproofing systems shall be listed in FM P7825 as a fire-protective coating or tape approved for grouped electrical conductors and shall be suitable for application on the type of medium-voltage cables provided. After being fully cured, materials shall be suitable for use where exposed to oil, water, gases, salt water, sewage, and fungus and shall not damage cable jackets or insulation. Asbestos materials are not acceptable.

2.13.1 Fireproof Coating

Cable fireproofing coatings shall be compounded of water-based thermoplastic resins, flame-retardant chemicals, and inorganic noncombustible fibers and shall be suitable for the application methods used. Coatings applied on bundled cables shall have a derating factor of less than 5 percent, and a dielectric strength of 95 volts per mil minimum after curing.

2.13.2 Fireproofing Tape

Fireproofing tape shall be at least 50 mm (2 inches) wide and shall be a flexible, conformable, polymeric, elastomer tape designed specifically for fireproofing cables.

2.13.3 Plastic Tape

Preapplication plastic tape shall be pressure sensitive, 0.254 mm (10 mil) thick, conforming to UL 510.

2.14 LIQUID DIELECTRICS

Liquid dielectrics for transformers, capacitors, reclosers, and other liquid-filled electrical equipment shall be non-polychlorinated biphenyl (PCB) mineral-oil or less-flammable liquid as specified. Nonflammable fluids shall not be used. Tetrachloroethylene (perchloroethylene) and 1, 2, 4 trichlorobenzene fluids shall not be used.

2.15 FACTORY TESTS

Factory tests shall be performed, as follows, in accordance with the applicable publications and with other requirements of these

specifications. The Contracting Officer shall be notified at least 10 days before the equipment is ready for testing. The Contracting Officer reserves the right to witness the tests.

a. Transformers: Manufacturer's standard tests in accordance with IEEE C57.12.00.

b. Transformers rated 200 kVA and above: Reduced full-wave, chopped-wave, and full-wave impulse test on each line and neutral terminal, in accordance with IEEE C57.98.

c. Factory Preformed Terminations: Wet withstand voltage tests in accordance with IEEE Std 48 for the next higher BIL level.

PART 3 EXECUTION

3.1 GENERAL INSTALLATION REQUIREMENTS

Equipment and devices shall be installed and energized in accordance with the manufacturer's published instructions. Circuits installed aerially shall conform to the requirements of Section 16370 ELECTRICAL DISTRIBUTION SYSTEM, AERIAL. Steel conduits installed underground shall be installed and protected from corrosion in conformance with the requirements of Section 16415 ELECTRICAL WORK, INTERIOR. Except as covered herein, excavation, trenching, and backfilling shall conform to the requirements of Section 02222 EXCAVATION, TRENCHING, AND BACKFILLING FOR UTILITIES SYSTEMS. Concrete work shall have minimum 20 MPa compressive strength and conform to the requirements of Section 03200 CONCRETE REINFORCEMENT and Section 03300CONCRETE FOR BUILDING CONSTRUCTION..

3.1.1 Conformance to Codes

The installation shall comply with the requirements and recommendations of NFPA 70 and IEEE C2 as applicable.

3.1.2 Verification of Dimensions

The Contractor shall become familiar with details of the work, shall verify dimensions in the field, and shall advise the Contracting Officer of any discrepancy before performing any work.

3.2 CABLE INSTALLATION

The Contractor shall obtain from the manufacturer an installation manual or set of instructions which addresses such aspects as cable construction, insulation type, cable diameter, bending radius, cable temperature, lubricants, coefficient of friction, conduit cleaning, storage procedures, moisture seals, testing for and purging moisture, etc. The Contractor shall then prepare a checklist of significant requirements which shall be submitted along with the manufacturers instructions in accordance with SUBMITTALS.

3.2.1 Cable Installation Plan and Procedure

Cable shall be installed strictly in accordance with the cable manufacturer's recommendations. Each circuit shall be identified by means of a fiber, laminated plastic, or non-ferrous metal tags, or approved equal, in each handhole, junction box, and each terminal. Each tag shall

contain the following information; cable type, conductor size, circuit number, circuit voltage, cable destination and phase identification.

3.2.1.1 Cable Inspection

The cable reel shall be inspected for correct storage positions, signs of physical damage, and broken end seals. If end seal is broken, moisture shall be removed from cable in accordance with the cable manufacturer's recommendations.

3.2.1.2 Duct Cleaning

Duct shall be cleaned with an assembly that consists of a flexible mandrel (manufacturers standard product in lengths recommended for the specific size and type of duct) that is 6.4 mm (1/4 inch) less than inside diameter of duct, 2 wire brushes, and a rag. The cleaning assembly shall be pulled through conduit a minimum of 2 times or until less than a volume of 131 cubic centimeters (8 cubic inches) of debris is expelled from the duct.

3.2.1.3 Duct Lubrication

The cable lubricant shall be compatible with the cable jacket for cable that is being installed. Application of lubricant shall be in accordance with lubricant manufacturer's recommendations.

3.2.1.4 Cable Installation

The Contractor shall provide a cable feeding truck and a cable pulling winch as required. The Contractor shall provide a pulling grip or pulling eye in accordance with cable manufacturer's recommendations. The pulling grip or pulling eye apparatus shall be attached to polypropylene or manilla rope followed by lubricant front end packs and then by power cables. A dynamometer shall be used to monitor pulling tension. Pulling tension shall not exceed cable manufacturer's recommendations. The Contractor shall not allow cables to cross over while cables are being fed into duct. For cable installation in cold weather, cables shall be kept at 10 degrees C (50 degrees F) temperature for at least 24 hours before installation.

3.2.1.5 Cable Installation Plan

The Contractor shall submit a cable installation plan for all cable pulls in accordance with the detail drawings portion of paragraph SUBMITTALS. Cable installation plan shall include:

a. Site layout drawing with cable pulls identified in numeric order of expected pulling sequence and direction of cable pull.
b. List of cable installation equipment.
c. Lubricant manufacturer's application instructions.
d. Procedure for resealing cable ends to prevent moisture from entering cable.
e. Cable pulling tension calculations of all cable pulls.
f. Cable percentage conduit fill.
g. Cable sidewall thrust pressure.
h. Cable minimum bend radius and minimum diameter of pulling wheels used.
i. Cable jam ratio.
j. Maximum allowable pulling tension on each different type and size of conductor.
k. Maximum allowable pulling tension on pulling device.

3.2.2 Duct Line

Medium-voltage cables and low-voltage cables shall be installed in duct lines where indicated. Cable splices in low-voltage cables shall be made in handholes only, except as otherwise noted. Cable joints in medium-voltage cables shall be made in approved pullboxes only. Neutral and grounding conductors shall be installed in the same duct with their associated phase conductors.

3.2.3 Electric Handholes

Cables shall be routed around the interior walls and securely supported from walls on cables racks. Cable routing shall minimize cable crossover, provide access space for maintenance and installation of additional cables, and maintain cable separation in accordance with IEEE C2.

3.3 CABLE JOINTS

Medium-voltage cable joints shall be made by qualified cable splicers only. Qualifications of cable splicers shall be submitted in accordance with paragraph SUBMITTALS. Shields shall be applied as required to continue the shielding system through each entire cable joint. Shields may be integrally molded parts of preformed joints. Shields shall be grounded at each joint or in accordance with manufacturer's recommended practice. Cable joints shall provide insulation and jacket equivalent to that of the associated cable. Armored cable joints shall be enclosed in compound-filled, cast-iron or alloy, splice boxes equipped with stuffing boxes and armor clamps of a suitable type and size for the cable being installed.

3.4 DUCT LINES

3.4.1 Requirements

Numbers and sizes of ducts shall be as indicated. Duct lines shall be laid with a minimum slope of 100 mm per 30 m. Depending on the contour of the finished grade, the high-point may be at a terminal, a handhole or vault, or pullboxes. Short-radius manufactured 90-degree duct bends may be used only for pole or equipment risers, unless specifically indicated as acceptable. The minimum manufactured bend radius shall be 450 mm (18 inches) for ducts of less than 80 mm (3 inch) diameter, and 900 mm (36 inches) for ducts 80 mm (3 inches) or greater in diameter. Otherwise, long sweep bends having a minimum radius of 7.6 m shall be used for a change of direction of more than 5 degrees, either horizontally or vertically. Both curved and straight sections may be used to form long sweep bends, but the maximum curve used shall be 30 degrees and manufactured bends shall be used.

3.4.2 Treatment

Ducts shall be kept clean of concrete, dirt, or foreign substances during construction. Field cuts requiring tapers shall be made with proper tools and match factory tapers. A coupling recommended by the duct manufacturer shall be used whenever an existing duct is connected to a duct of different material or shape. Ducts shall be stored to avoid warping and deterioration with ends sufficiently plugged to prevent entry of any water or solid substances. Ducts shall be thoroughly cleaned before being laid. Plastic ducts shall be stored on a flat surface and protected from the

direct rays of the sun.

3.4.3 Concrete Encasement

Ducts requiring concrete encasements shall comply with NFPA 70, except that electrical duct bank configurations for ducts 150 mm (6 inches) in diameter shall be determined by calculation and as shown on the drawings. The separation between adjacent electric power and communication ducts shall conform to IEEE C2. Duct line encasements shall be monolithic construction. Where a connection is made to a previously poured encasement, the new encasement shall be well bonded or doweled to the existing encasement. The Contractor shall submit proposed bonding method for approval in accordance with the detail drawing portion of paragraph SUBMITTALS. At any point, except railroad crossings, tops of concrete encasements shall be not less than the cover requirements listed in NFPA 70. At railroad crossings, duct lines shall be encased with concrete and reinforced as indicated to withstand specified surface loadings. Tops of concrete encasements shall be not less than 1.5 mbelow tops of rails or airfield paving unless otherwise indicated. Where ducts are jacked under existing pavement, rigid steel conduit will be installed because of its strength. To protect the corrosion-resistant conduit coating, predrilling or installing conduit inside a larger iron pipe sleeve (jack-and-sleeve) is required. For crossings of existing railroads , the predrilling method or the jack-and-sleeve method will be used. Separators or spacing blocks shall be made of steel, concrete, plastic, or a combination of these materials placed not farther apart than 1.2 m on centers. Ducts shall be securely anchored to prevent movement during the placement of concrete and joints shall be staggered at least 150 mm vertically.

3.4.4 Nonencased Direct-Burial

Top of duct lines shall be below the frost line depth of 762 mm, but not less than 610 mm below finished grade and shall be installed with a minimum of 75 mm of earth around each duct, except that between adjacent electric power and communication ducts, 300 mm of earth is required. Bottoms of trenches shall be graded toward handholes and shall be smooth and free of stones, soft spots, and sharp objects. Where bottoms of trenches comprise materials other than sand, a 75 mm layer of sand shall be laid first and compacted to approximate densities of surrounding firm soil before installing ducts. Joints in adjacent tiers of duct shall be vertically staggered at least 150 mm. The first 150 mm layer of backfill cover shall be sand compacted as previously specified. The rest of the excavation shall be backfilled and compacted in 75 to 150 mm layers. Duct banks may be held in alignment with earth. However, high-tiered banks shall use a wooden frame or equivalent form to hold ducts in alignment prior to backfilling.

3.4.5 Installation of Couplings

Joints in each type of duct shall be made up in accordance with the manufacturer's recommendations for the particular type of duct and coupling selected and as approved.

3.4.5.1 Plastic Duct

Duct joints shall be made by brushing a plastic solvent cement on insides of plastic coupling fittings and on outsides of duct ends. Each duct and fitting shall then be slipped together with a quick 1/4-turn twist to set the joint tightly.

3.4.6 Duct Line Markers

Duct line markers shall be provided at the ends of long duct line stubouts or for other ducts whose locations are indeterminate because of duct curvature or terminations at completely below-grade structures. In addition to markers, a 0.127 mm (5 mil) brightly colored plastic tape, not less than 75 mm (3 inches) in width and suitably inscribed at not more than 3 m (10 feet) on centers with a continuous metallic backing and a corrosion-resistant 0.0254 mm (1 mil) metallic foil core to permit easy location of the duct line, shall be placed approximately 300 mm below finished grade levels of such lines.

3.5 HANDHOLES, AND PULLBOXES

3.5.1 General

Handholes and pullboxes shall be constructed approximately where shown. The exact location of each handhole or pullbox shall be determined after careful consideration has been given to the location of other utilities, grading, and paving. The location of each handhole shall be approved by the Contracting Officer before construction of the handhole is started. Handholes shall be the type noted on the drawings and shall be constructed in accordance with the applicable details as indicated. Top, walls, and bottom shall consist of reinforced concrete. Walls and bottom shall be of monolithic concrete construction. The Contractor may at his option utilize monolithically constructed precast-concrete handholes having the required strength and inside dimensions as required by the drawings or specifications. In paved areas, frames and covers for handhole and handhole entrances in vehicular traffic areas shall be flush with the finished surface of the paving. In unpaved areas, the top of handhole covers shall be approximately 15 mm above the finished grade. Where existing grades that are higher than finished grades are encountered, concrete assemblies designed for the purpose shall be installed to elevate temporarily the handhole cover to existing grade level. All duct lines entering handholes must be installed on compact soil or otherwise supported when entering a handhole to prevent shear stress on the duct at the point of entrance to the handhole. Duct lines entering cast-in-place concrete handholes shall be cast in-place with the handhole. Duct lines entering precast concrete handholes or existing vault through a precast knockout penetration shall be grouted tight with a portland cement mortar. PVC duct lines entering precast handholes through a PVC endbell shall be solvent welded to the endbell. A cast metal grille-type sump frame and cover shall be installed over the handhole sump. A cable-pulling iron shall be installed in the wall opposite each duct line entrance.

3.5.2 Communication Handholes

Handholes shall be located approximately as shown. Handholes shall be of the type noted on the drawings and shall be constructed in accordance with the details shown.

3.5.3 Pullboxes

Pullbox tops shall be flush with sidewalks or curbs or placed 15 mm above surrounding grades when remote from curbed roadways or sidewalks. Covers shall be marked "Low-Voltage" and provided with 2 lifting eyes and 2 hold-down bolts. Each box shall have a suitable opening for a ground rod. Conduit, cable, ground rod entrances, and unused openings shall be sealed

with mortar.

3.5.4 Ground Rods

A ground rod shall be installed at the handholes and pullboxes. Ground rods shall be driven into the earth before the handhole floor is poured so that approximately 100 mm of the ground rod will extend above the handhole and/or pullbox floor. When precast concrete handholes are used, the top of the ground rod may be below the handhole floor and a No. 1/0 AWG ground conductor brought into the handhole through a watertight sleeve in the handhole wall.

3.6 PAD-MOUNTED EQUIPMENT INSTALLATION

Pad-mounted equipment, shall be installed on concrete pads in accordance with the manufacturer's published, standard installation drawings and procedures, except that they shall be modified to meet the requirements of this document. Units shall be installed so that they do not damage equipment or scratch painted or coated surfaces. After installation, surfaces shall be inspected and scratches touched up with a paint or coating provided by the manufacturer especially for this purpose. Three-phase transformers shall be installed with phase sequence in accordance with the local practice.

3.6.1 Concrete Pads

3.6.1.1 Construction

Concrete pads for pad-mounted electrical equipment may be either pre-fabricated or poured-in-place. Pads shall be constructed as indicated, except that exact pad dimensions and mounting details are equipment specific and are the responsibility of the Contractor. Tops of concrete pads shall be level and shall project 100 mm above finished paving or grade and sloped to drain. Edges of concrete pads shall have 20 mm chamfer. Conduits for primary, secondary, and grounding conductors shall be set in place prior to placement of concrete pads. Where grounding electrode conductors are installed through concrete pads, PVC conduit sleeves shall be installed through the concrete to provide physical protection. To facilitate cable installation and termination, the concrete pad shall be provided with a rectangular hole below the primary and secondary compartments, sized in accordance with the manufacturer's recommended dimensions. Upon completion of equipment installation the rectangular hole shall be filled with masonry grout.

3.6.1.2 Concrete and Reinforcement

Concrete work shall have minimum 20 MPa compressive strength and comform to the requirements of Section 03300 CONCRETE FOR BUILDING CONSTRUCTION. Concrete pad reinforcement shall be in accordance with Section 03200 CONCRETE REINFORCEMENT.

3.6.1.3 Sealing

When the installation is complete, the Contractor shall seal all conduit and other entries into the equipment enclosure with an approved sealing compound. Seals shall be of sufficient strength and durability to protect all energized live parts of the equipment from rodents, insects, or other foreign matter.

3.7 CONNECTIONS BETWEEN AERIAL AND UNDERGROUND SYSTEMS

Connections between aerial and underground systems shall be made as shown. Underground cables shall be extended up poles in conduit to cable terminations. Conduits shall be secured to the poles by 2-hole galvanized steel pipe straps spaced not more than 3 m apart and with 1 strap not more than 300 mm from any bend or termination. Cable guards shall be secured to poles in accordance with the manufacturer's published procedures. Conduits shall be equipped with bushings to protect cables and minimize water entry. Capnut potheads shall be used to terminate medium-voltage multiple-conductor cable. Cables shall be supported by devices separate from the conduit or guard, near their point of exit from the conduit or guard.

3.8 CONNECTIONS TO BUILDINGS

Cables shall be extended into the various buildings as indicated, and shall be connected to the first applicable termination point in each building. Interfacing with building interior conduit systems shall be at conduit stubouts terminating 1.5 m outside of a building and 600 mm below finished grade as specified and provided under Section 16415 ELECTRICAL WORK, INTERIOR. After installation of cables, conduits shall be sealed with caulking compound to prevent entrance of moisture or gases into buildings.

3.9 GROUNDING

A ground ring consisting of the indicated configuration of bare copper conductors and driven ground rods shall be installed around pad-mounted equipment as shown. Equipment frames of metal-enclosed equipment, and other noncurrent-carrying metal parts, such as cable shields, cable sheaths and armor, and metallic conduit shall be grounded. At least 2 connections shall be provided from a transformer, to the ground mat. Metallic frames and covers of handholes and pull boxes shall be grounded by use of a braided, copper ground strap with equivalent ampacity of No. 6 AWG.

3.9.1 Grounding Electrodes

Grounding electrodes shall be installed as shown on the drawings and as follows:

a. Driven rod electrodes - Unless otherwise indicated, ground rods shall be driven into the earth until the tops of the rods are approximately 300 mm below finished grade.

b. Ground ring - A ground ring shall be installed as shown consisting of bare copper conductors installed 300 mm, plus or minus 75 mm, below finished top of soil grade. Ground ring conductors shall be No. 2 AWG, minimum.

c. Additional electrodes - When the required ground resistance is not met, additional electrodes shall be provided interconnected with grounding conductors to achieve the specified ground resistance. The additional electrodes will be up to three, 3 m (10 feet) rods spaced a minimum of 3 m apart or a single extension-type rod, 19.1 mm (3/4 inch) diameter, up to 9.1 m (30 feet) long, driven perpendicular to grade. If the resultant resistance exceeds 25 ohms measured not less than 48 hours after rainfall, the Contracting Officer shall be notified immediately.

3.9.2 Grounding and Bonding Connections

Connections above grade shall be made by the fusion-welding process or with bolted solderless connectors, in compliance with UL 467, and those below grade shall be made by a fusion-welding process. Where grounding conductors are connected to aluminum-composition conductors, specially treated or lined copper-to-aluminum connectors suitable for this purpose shall be used.

3.9.3 Grounding and Bonding Conductors

Grounding and bonding conductors include conductors used to bond transformer enclosures and equipment frames to the grounding electrode system. Grounding and bonding conductors shall be sized as shown, and located to provide maximum physical protection. Bends greater than 45 degrees in ground conductors are not permitted. Routing of ground conductors through concrete shall be avoided. When concrete penetration is necessary, nonmetallic conduit shall be cast flush with the points of concrete entrance and exit so as to provide an opening for the ground conductor, and the opening shall be sealed with a suitable compound after installation.

3.9.4 Surge Arrester Grounding

Surge arresters and neutrals shall be bonded directly to the transformer enclosure and then to the grounding electrode system with a bare copper conductor, sized as shown. Lead lengths shall be kept as short as practicable with no kinks or sharp bends.

3.9.5 Handhole, or Concrete Pullbox Grounding

Ground rods installed in handholes, or concrete pullboxes shall be connected to cable racks, cable-pulling irons, the cable shielding, metallic sheath, and armor at each cable joint or splice by means of a No. 4 AWG braided tinned copper wire. Connections to metallic cable sheaths shall be by means of tinned terminals soldered to ground wires and to cable sheaths. Care shall be taken in soldering not to damage metallic cable sheaths or shields. Ground rods shall be protected with a double wrapping of pressure-sensitive plastic tape for a distance of 50 mm above and 150 mm below concrete penetrations. Grounding electrode conductors shall be neatly and firmly attached to handhole walls and the amount of exposed bare wire shall be held to a minimum.

3.9.6 Riser Pole Grounding

A single continuous vertical grounding electrode conductor shall be installed on each riser pole and connected directly to the grounding electrodes indicated on the drawings or required by these specifications. All equipment, neutrals, surge arresters, and items required to be grounded shall be connected directly to this vertical conductor. The grounding electrode conductor shall be sized as shown. Grounding electrode conductors shall be stapled to wood poles at intervals not exceeding 600 mm.

3.10 FIELD TESTING

3.10.1 General

Field testing shall be performed in the presence of the Contracting Officer. The Contractor shall notify the Contracting Officer 7 days prior

to conducting tests. The Contractor shall furnish all materials, labor, and equipment necessary to conduct field tests. The Contractor shall perform all tests and inspections recommended by the manufacturer unless specifically waived by the Contracting Officer. The Contractor shall maintain a written record of all tests which includes date, test performed, personnel involved, devices tested, serial number and name of test equipment, and test results. Field test reports shall be signed and dated by the Contractor.

3.10.2 Safety

The Contractor shall provide and use safety devices such as rubber gloves, protective barriers, and danger signs to protect and warn personnel in the test vicinity. The Contractor shall replace any devices or equipment which are damaged due to improper test procedures or handling.

3.10.3 Ground-Resistance Tests

The resistance of each grounding electrode system shall be measured using the fall-of-potential method defined in IEEE Std 81. Ground resistance measurements shall be made before the electrical distribution system is energized and shall be made in normally dry conditions not less than 48 hours after the last rainfall. Resistance measurements of separate grounding electrode systems shall be made before the systems are bonded together below grade. The combined resistance of separate systems may be used to meet the required resistance, but the specified number of electrodes must still be provided.

a. Single electrode system - 25 ohms.

3.10.4 Ground-Mat Connection Inspection

All below-grade ground-mat connections will be visually inspected by the Contracting Officer before backfilling. The Contractor shall notify the Contracting Officer 48 hours before the site is ready for inspection.

3.10.5 Medium-Voltage Cable Test

After installation and before the operating test or connection to an existing system, the medium-voltage cable system shall be given a high potential test. Direct-current voltage shall be applied on each phase conductor of the system by connecting conductors as one terminal and connecting grounds or metallic shieldings or sheaths of the cable as the other terminal for each test. Prior to making the test, the cables shall be isolated by opening applicable protective devices and disconnecting equipment. The test shall be conducted with all splices, connectors, and terminations in place. The method, voltage, length of time, and other characteristics of the test for initial installation shall be in accordance with NEMA WC 7 or NEMA WC 8 for the particular type of cable installed, except that 28 kV and 35 kV insulation test voltages shall be in accordance with either AEIC CS5 or AEIC CS6 as applicable, and shall not exceed the recommendations of IEEE Std 404 for cable joints and IEEE Std 48 for cable terminations unless the cable and accessory manufacturers indicate higher voltages are acceptable for testing. Should any cable fail due to a weakness of conductor insulation or due to defects or injuries incidental to the installation or because of improper installation of cable, cable joints, terminations, or other connections, the Contractor shall make necessary repairs or replace cables as directed. Repaired or replaced cables shall be retested.

3.10.6 Low-Voltage Cable Test

Low-voltage cable, complete with splices, shall be tested for insulation resistance after the cables are installed, in their final configuration, ready for connection to the equipment, and prior to energization. The test voltage shall be 500 volts dc, applied for one minute between each conductor and ground and between all possible combinations conductors in the same trench, duct, or cable, with all other conductors in the same trench, duct, or conduit. The minimum value of insulation shall be:

R in megohms = (rated voltage in kV + 1) x 304.8/(length of cable in meters)

Each cable failing this test shall be repaired or replaced. The repaired cable shall be retested until failures have been eliminated.

3.10.7 Liquid-Filled Transformer Tests

The following field tests shall be performed on liquid-filled transformers 225 kVA and above. Pass-fail criteria shall be in accordance with transformer manufacturer's specifications.

a. Insulation resistance test phase-to-ground.
b. Turns ratio test.
c. Correct phase sequence.
d. Correct operation of tap changer.

3.10.8 Pre-Energization Services

Calibration, testing, adjustment, and placing into service of the installation shall be accomplished by a manufacturer's product field service engineer or independent testing company with a minimum of 2 years of current product experience. The following services shall be performed on the equipment listed below. These services shall be performed subsequent to testing but prior to the initial energization. The equipment shall be inspected to ensure that installation is in compliance with the recommendations of the manufacturer and as shown on the detail drawings. Terminations of conductors at major equipment shall be inspected to ensure the adequacy of connections. Bare and insulated conductors between such terminations shall be inspected to detect possible damage during installation. If factory tests were not performed on completed assemblies, tests shall be performed after the installation of completed assemblies. Components shall be inspected for damage caused during installation or shipment to ensure packaging materials have been removed. Components capable of being both manually and electrically operated shall be operated manually prior to the first electrical operation. Components capable of being calibrated, adjusted, and tested shall be calibrated, adjusted, and tested in accordance with the instructions of the equipment manufacturer. Items for which such services shall be provided, but are not limited to, are the following:

a. Pad-mounted transformers

3.10.9 Operating Tests

After the installation is completed, and at such times as the Contracting Officer may direct, the Contractor shall conduct operating tests for approval. The equipment shall be demonstrated to operate in accordance with the requirements herein. An operating test report shall be submitted

in accordance with paragraph SUBMITTALS.

3.11 MANUFACTURER'S FIELD SERVICE

3.11.1 Onsite Training

The Contractor shall conduct a training course for the operating staff as designated by the Contracting Officer. The training period shall consist of a total of 8 hours of normal working time and shall start after the system is functionally completed but prior to final acceptance tests. The course instruction shall cover pertinent points involved in operating, starting, stopping, and servicing the equipment, as well as all major elements of the operation and maintenance manuals. Additionally, the course instructions shall demonstrate all routine maintenance operations. A VHS format video tape of the entire training session shall be submitted.

3.11.2 Installation Engineer

After delivery of the equipment, the Contractor shall furnish one or more field engineers, regularly employed by the equipment manufacturer to supervise the installation of the equipment, assist in the performance of the onsite tests, initial operation, and instruct personnel as to the operational and maintenance features of the equipment.

3.12 ACCEPTANCE

Final acceptance of the facility will not be given until the Contractor has successfully completed all tests and after all defects in installation, material or operation have been corrected.

-- End of Section --

SECTION TABLE OF CONTENTS

DIVISION 16 - ELECTRICAL

SECTION 16415

ELECTRICAL WORK, INTERIOR

PART 1 GENERAL

1.1 REFERENCES
1.2 GENERAL
1.2.1 Rules
1.2.2 Coordination
1.2.3 Special Environments
1.2.3.1 Weatherproof Locations
1.2.3.2 Ducts, Plenums and Other Air-Handling Spaces
1.2.4 Standard Products
1.2.5 NAMEPLATES
1.2.5.1 Identification Nameplates
1.2.6 As-Built Drawings
1.2.7 Year 2000 Compliant Equipment
1.3 SUBMITTALS
1.4 WORKMANSHIP

PART 2 PRODUCTS

2.1 CABLES AND WIRES
2.1.1 Equipment Manufacturer Requirements
2.1.2 Aluminum Conductors
2.1.3 Insulation
2.1.4 Bonding Conductors
2.2 CIRCUIT BREAKERS
2.2.1 MOLDED-CASE CIRCUIT BREAKERS
2.2.1.1 Construction
2.2.1.2 Ratings
2.2.2 Ground Fault Circuit Interrupters
2.3 CONDUIT AND TUBING
2.3.1 Electrical, Zinc-Coated Steel Metallic Tubing (EMT)
2.3.2 Electrical Plastic Tubing and Conduit
2.3.3 Flexible Conduit, Steel and Plastic
2.3.4 Intermediate Metal Conduit
2.3.5 PVC Coated Rigid Steel Conduit
2.3.6 Rigid Metal Conduit
2.3.7 Rigid Plastic
2.4 CONDUIT AND DEVICE BOXES AND FITTINGS
2.4.1 Boxes, Metallic Outlet
2.4.2 Boxes, Switch (Enclosed), Surface-Mounted
2.4.3 Fittings for Conduit and Outlet Boxes
2.4.4 Fittings, PVC, for Use with Rigid PVC Conduit and Tubing
2.5 CONDUIT COATINGS PLASTIC RESIN SYSTEM
2.6 CONNECTORS, WIRE PRESSURE
2.6.1 For Use With Copper Conductors
2.6.2 For Use With Aluminum Conductors

2.7 ELECTRICAL GROUNDING AND BONDING EQUIPMENT
2.7.1 Ground Rods
2.7.2 Ground Bus
2.8 ENCLOSURES
2.8.1 Cabinets and Boxes
2.8.2 Circuit Breaker Enclosures
2.9 FIXTURES, LIGHTING AND FIXTURE ACCESSORIES/COMPONENTS
2.9.1 Fixture, Auxiliary or Emergency
2.9.2 Incandescent Fixture
2.9.3 Fluorescent
2.9.4 High-Intensity-Discharge
2.10 LOW-VOLTAGE FUSES AND FUSEHOLDERS
2.10.1 Fuses, Low Voltage Cartridge Type
2.10.2 Fuses, High-Interrupting-Capacity, Current-Limiting Type
2.10.3 Fuses, Class K, High-Interrupting-Capacity Type
2.10.4 Fuses, Class H
2.10.5 Fuses, Class R
2.10.6 Fuses for Supplementary Overcurrent Protection
2.10.7 Fuseholders
2.11 INSTRUMENTS, ELECTRICAL INDICATING
2.12 MOTORS, AC, FRACTIONAL AND INTEGRAL
2.12.1 Rating
2.12.2 Motor Efficiencies
2.13 MOTOR CONTROLS
2.13.1 General
2.13.2 Motor Starters
2.13.3 Thermal-Overload Protection
2.13.4 Low-Voltage Motor Overload Relays
2.13.4.1 General
2.13.4.2 Construction
2.13.4.3 Ratings
2.13.5 Automatic Control Devices
2.13.5.1 Direct Control
2.13.5.2 Pilot-Relay Control
2.13.5.3 Manual/Automatic Selection
2.14 PANELBOARDS
2.15 RECEPTACLES
2.15.1 Standard Grade
2.15.2 Ground Fault Interrupters
2.15.3 NEMA Standard Receptacle Configurations
2.16 Service Entrance Equipment
2.17 SPLICE, CONDUCTOR
2.18 Digital Power Monitor (PM)
2.18.1 General
2.18.2 Parameters
2.18.3 Input Ranges
2.18.4 Functions
2.18.5 Waveform Capture
2.18.6 Computer Interface
2.18.7 Start-up and Training
2.18.8 Software
2.19 SNAP SWITCHES
2.20 TAPES
2.20.1 Plastic Tape
2.20.2 Rubber Tape
2.21 TRANSFORMERS
2.21.1 Transformers, Dry-Type
2.21.2 Average Sound Level
2.22 WIRING DEVICES

PART 3 EXECUTION

3.1 GROUNDING
3.1.1 Ground Rods
3.1.2 Grounding Conductors
3.2 WIRING METHODS
3.2.1 Conduit and Tubing Systems
3.2.1.1 Pull Wires
3.2.1.2 Conduit Stub-Ups
3.2.1.3 Below Slab-on-Grade or in the Ground
3.2.1.4 Installing in Slabs Including Slabs on Grade
3.2.1.5 Changes in Direction of Runs
3.2.1.6 Supports
3.2.1.7 Exposed Raceways
3.2.1.8 Communications Raceways
3.2.2 Cables and Conductors
3.2.2.1 Sizing
3.2.2.2 Use of Aluminum Conductors in Lieu of Copper
3.2.2.3 Cable Splicing
3.2.2.4 Conductor Identification and Tagging
3.3 BOXES AND SUPPORTS
3.3.1 Box Applications
3.3.2 Brackets and Fasteners
3.3.3 Mounting in Walls, Ceilings, or Recessed Locations
3.3.4 Installation in Overhead Spaces
3.4 DEVICE PLATES
3.5 RECEPTACLES
3.5.1 Single and Duplex, 20-ampere, 125 volt
3.5.2 Weatherproof Applications
3.5.2.1 Damp Locations
3.5.3 Receptacles, 20-Ampere, 250-Volt
3.5.4 Special-Purpose or Heavy-Duty Receptacles
3.6 WALL SWITCHES
3.7 SERVICE EQUIPMENT
3.8 PANELBOARDS
3.8.1 Panelboards
3.9 FUSES
3.9.1 Cartridge Fuses; Current-Limiting Type
3.10 UNDERGROUND SERVICE
3.11 MOTORS
3.12 MOTOR CONTROL
3.12.1 Contacts
3.12.2 Safety Controls
3.13 MOTOR-DISCONNECT MEANS
3.14 TRANSFORMER INSTALLATION
3.15 LAMPS AND LIGHTING FIXTURES
3.15.1 Lamps
3.15.1.1 Incandescent
3.15.1.2 Fluorescent
3.15.1.3 High-Intensity-Discharge
3.15.2 Fixtures
3.15.2.1 Accessories
3.15.2.2 Suspended Fixtures
3.15.2.3 Ceiling Fixtures
3.15.2.4 Sockets
3.15.3 Photocell
3.15.4 OCCUPANCY SENSORS
3.15.4.1 Operation

3.15.4.2 Equipment Specifications
3.15.4.2.1 Description
3.16 Execution
3.17 Sensor Test and Adjustment
3.18 Emergency Light Sets
3.19 EQUIPMENT CONNECTIONS
3.19.1 Motors and Motor Control
3.20 CIRCUIT PROTECTIVE DEVICES
3.21 PAINTING AND FINISHING
3.22 REPAIR OF EXISTING WORK
3.23 FIELD TESTING
3.23.1 Safety
3.23.2 Ground-Resistance Tests
3.23.3 Cable Tests
3.23.3.1 Low Voltage Cable Tests
3.23.4 Motor Tests
3.23.5 Dry-Type Transformer Tests
3.23.6 Circuit Breaker Tests
3.23.6.1 Circuit Breakers, Molded Case
3.24 OPERATING TESTS
3.25 ACCEPTANCE

-- End of Section Table of Contents --

SECTION 16415

ELECTRICAL WORK, INTERIOR

PART 1 GENERAL

1.1 REFERENCES

The publications listed below form a part of this specification to the extent referenced. The publications are referred to in the text by basic designation only.

AMERICAN NATIONAL STANDARDS INSTITUTE (ANSI)

ANSI C39.1	(1981; R 1992) Requirements forElectrical Analog Indicating Instruments
ANSI C82.4	(1992) Ballasts for High-Intensity-Discharge and Low-Pressure Sodium Lamps (Multiple-Supply Type)

AMERICAN SOCIETY FOR TESTING AND MATERIALS (ASTM)

ASTM B 1	(1990) Hard-Drawn Copper Wire
ASTM B 8	(1993) Concentric-Lay-Stranded Copper Conductors, Hard, Medium-Hard, or Soft
ASTM D 709	(1992) Laminated Thermosetting Materials

CODE OF FEDERAL REGULATIONS (CFR)

47 CFR 18	Industrial, Scientific and Medical Equipment

INSTITUTE OF ELECTRICAL AND ELECTRONICS ENGINEERS (IEEE)

IEEE C62.41	(1991) Surge Voltages in Low-Voltage AC Power Circuits
IEEE Std 81	(1983) Guide for Measuring Earth Resistivity, Ground Impedance, and Earth Surface Potentials of a Ground System (Part 1)

NATIONAL ELECTRICAL MANUFACTURERS ASSOCIATION (NEMA)

NEMA 250	(1991) Enclosures for Electrical Equipment (1000 Volts Maximum)
NEMA AB 1	(1993) Molded Case Circuit Breakers and Molded Case Switches

NEMA FU 1	(1986) Low Voltage Cartridge Fuses
NEMA ICS 1	(1993) Industrial Controls and Systems
NEMA ICS 2	(1993) Industrial Control and Systems, Controllers, Contactors Overload Relays Rated not More Than 2,000 Volts AC or 750 DC
NEMA ICS 3	(1993) Industrial Systems
NEMA ICS 6	(1993) Industrial Control and Systems, Enclosures
NEMA LE 4	(1987) Recessed Luminaires, Ceiling Compatibility
NEMA MG 1	(1993; Rev 1) Motors and Generators
NEMA MG 10	(1994) Energy Management Guide for Selection and Use of Polyphase Motors
NEMA OS 1	(1989) Sheet-Steel Outlet Boxes, Device Boxes, Covers, and Box Supports
NEMA PB 1	(1990) Panelboards
NEMA RN 1	(1989) Polyvinyl-Chloride (PVC) Externally Coated Galvanized Rigid Steel Conduit and Intermediate Metal Conduit
NEMA ST 20	(1992) Dry-Type Transformers for General Applications
NEMA TC 2	(1990) Electrical Polyvinyl Chloride (PVC) Tubing (EPT) and Conduit (EPC-40 and EPC-80)
NEMA WD 1	(1983; R 1989) General Requirements for Wiring Devices
NEMA WD 6	(1988) Wiring Devices - Dimensional Requirements

NATIONAL FIRE PROTECTION ASSOCIATION (NFPA)

NFPA 70	(1996) National Electrical Code
NFPA 101	(1994) Safety to Life from Fire in Buildings and Structures

UNDERWRITERS LABORATORIES (UL)

UL-03	(1996) Electrical Construction Materials Directory
UL 1	(1993; Rev thru Jan 1995) Flexible Metal Conduit

UL 6	(1993; Rev March 96) Rigid Metal Conduit
UL 20	(1995) General-Use Snap Switches
UL 44	(1991; Rev thru Jun 1996) Rubber-Insulated Wires and Cables
UL 50	(1995) Enclosures for Electrical Equipment
UL 67	(1993; Rev thru Dec 1993) Panelboards
UL 83	(1991; Rev thru Jun 1996) Thermoplastic-Insulated Wires and Cables
UL 98	(1994; R Oct 1995) Enclosed and Dead-Front Switches
UL 198B	(1995) Class H Fuses
UL 198C	(1986; Rev thru Jun 1993) High-Interrupting-Capacity Fuses, Current-Limiting Types
UL 198D	(1995) Class K Fuses
UL 198E	(1988; Rev Jul 1988) Class R Fuses
UL 198G	(1988; Rev May 1988) Fuses for Supplementary Overcurrent Protection
UL 360	(1986; Rev thru Dec 1995) Liquid-Tight Flexible Steel Conduit
UL 467	(1993; Rev thru Aug 1996) Grounding and Bonding Equipment
UL 486A	(1991; Rev Oct 1991) Wire Connectors and Soldering Lugs for Use with Copper Conductors
UL 486B	(1991; Rev thru Oct 1996) Wire Connectors for Use with Aluminum Conductors
UL 486C	(1991; Rev thru Oct 1996) Splicing Wire Connectors
UL 486E	(1994; Rev Aug 95) Equipment Wiring Terminal for Use with Aluminum and/or Copper Conductors
UL 489	(1996) Molded-Case Circuit Breakers and Circuit-Breaker Enclosures
UL 498	(1991; Rev thru Oct 1995) Attachment Plugs and Receptacles
UL 506	(1994; Rev Jul 1994) Specialty Transformers
UL 508	(1993) Industrial Control Equipment

UL 510	(1994) Insulating Tape
UL 512	(1993; R Dec 1995) Fuseholders
UL 514A	(1991; Rev Jun 1996) Metallic Outlet Boxes
UL 514B	(1989; Rev thru Apr 1995) Fittings for Conduit and Outlet Boxes
UL 514C	(1988; Rev thru Jul 1996) Nonmetallic Outlet Boxes, Flush-Device Boxes, and Covers
UL 542	(1994) Lampholders, Starters, and Starter Holders for Fluorescent Lamps
UL 651	(1995) Schedule 40 and 80 Rigid PVC Conduit
UL 651A	(1995) Type EB and A Rigid PVC Conduit and HDPE Conduit
UL 674	(1994; Rev thru Jul 1996) Electric Motors and Generators for Use in Division 1 Hazardous (Classified) Locations
UL 797	(1993; Rev May 1995) Electrical Metallic Tubing
UL 844	(1995; Rev thru Aug 1996) Electric Lighting Fixtures for Use in Hazardous (Classified) Locations
UL 845	(1995; Rev Feb 1996) Motor Control Centers
UL 869A	(1993; Rev Apr 1994) Reference Standard for Service Equipment
UL 924	(1995; Rev May 1995) Emergency Lighting and Power Equipment
UL 935	(1995; Rev Jun 1995) Fluorescent-Lamp Ballasts
UL 943	(1993; Rev thru Sep 1996)Ground-Fault Circuit Interrupters
UL 1004	(1994; Rev thru May 1996) Electric Motors
UL 1029	(1994; Rev Sep 1995) High-Intensity-Discharge Lamp Ballasts
UL 1242	(1983; Rev thru Jul 1993) Intermediate Metal Conduit
UL 1570	(1995) Fluorescent Lighting Fixtures
UL 1571	(1995; Rev thru Mar 95) Incandescent Lighting Fixtures

UL 1572	(1995; Rev thru Sep 96) High Intensity Discharge Lighting Fixtures
UL 1660	(1994) Liquid-Tight Flexible Nonmetallic Conduit

1.2 GENERAL

1.2.1 Rules

The installation shall conform to the requirements of NFPA 70 and NFPA 101, unless more stringent requirements are indicated herein or shown.

1.2.2 Coordination

The drawings indicate the extent and the general location and arrangement of equipment, conduit, and wiring. The Contractor shall become familiar with all details of the work and verify all dimensions in the field so that the outlets and equipment shall be properly located and readily accessible. Lighting fixtures, outlets, and other equipment and materials shall be located to avoid interference with mechanical or structural features; otherwise, lighting fixtures shall be symmetrically located according to the room arrangement when uniform illumination is required, or asymmetrically located to suit conditions fixed by design and shown. Raceways, junction and outlet boxes, and lighting fixtures shall not be supported from sheet metal roof decks. If any conflicts occur necessitating departures from the drawings, details of and reasons for departures shall be submitted and approved prior to implementing any change. The Contractor shall coordinate electrical work with the HVAC and electrical drawings and specifications and provide power related wiring.

1.2.3 Special Environments

1.2.3.1 Weatherproof Locations

Wiring, Fixtures, and equipment in designated locations shall conform to NFPA 70 requirements for installation in damp or wet locations.

1.2.3.2 Ducts, Plenums and Other Air-Handling Spaces

Wiring and equipment in ducts, plenums and other air-handling spaces shall be installed using materials and methods in conformance with NFPA 70unless more stringent requirements are indicated in this specification or on the contract drawings.

1.2.4 Standard Products

Material and equipment shall be a standard product of a manufacturer regularly engaged in the manufacture of the product and shall essentially duplicate items that have been in satisfactory use for at least 2 years prior to bid opening.

1.2.5 NAMEPLATES

1.2.5.1 Identification Nameplates

Major items of electrical equipment and major components shall be permanently marked with an identification name to identify the equipment by

type or function and specific unit number as indicated. Designation of motors shall coincide with their designation in the motor control center or panel. Unless otherwise specified, identification nameplates shall be made of laminated plastic in accordance with ASTM D 709 with black outer layers and a white core. Edges shall be chamfered. Plates shall be fastened with black-finished round-head drive screws, except motors, or approved nonadhesive metal fasteners. When the nameplate is to be installed on an irregular-shaped object, the Contractor shall devise an approved support suitable for the application and ensure the proper installation of the supports and nameplates. In all instances, the nameplate shall be installed in a conspicuous location. At the option of the Contractor, the equipment manufacturer's standard embossed nameplate material with black paint-filled letters may be furnished in lieu of laminated plastic. The front of each panelboard, motor control center, switchgear, and switchboard shall have a nameplate to indicate the phase letter, corresponding color and arrangement of the phase conductors. The following equipment, as a minimum, shall be provided with identification nameplates:

Minimum 6.4 mm High Letters	Minimum 3.2 mm High Letters
Panelboards	Control Power Transformers
Starters	Control Devices
Safety Switches	Instrument Transformers
	Digital Power Monitor
Transformers	
Equipment Enclosures	
Switchboards	
Motors	

Each panel, section, or unit or similar assemblies shall be provided with a nameplate in addition to nameplates listed above, which shall be provided for individual compartments in the respective assembly, including nameplates which identify "future," "spare," and "dedicated" or "equipped spaces."

1.2.6 As-Built Drawings

Following the project completion or turnover, within 30 days the Contractor shall furnish two sets of as-built drawings to the Contracting Officer.

1.2.7 Year 2000 Compliant Equipment

Where applicable, all equipment specified shall be Year 2000 compliant and shall be able to accurately process date/time data (including, but not limited to, calculating, comparing, and sequencing) from, into, and between the twentieth and twenty-first centuries, including leap year calculations, when used in accordance with the product documentation provided by the contractor, provided that all products (e.g. hardware, software, firmware) used in combination with other information technology, shall accurately process date/time data if the other information technology properly exchanges date/time data with it.

1.3 SUBMITTALS

Government approval is required for submittals with a "GA" designation; submittals having an "FIO" designation are for information only. The following shall be submitted in accordance with Section 01330 SUBMITTAL PROCEDURES:

SD-01 Data

Warehouse Light Fixtures and Occupancy Sensor Control Systems; GA.

Manufacturer's data for warehouse area (hibay) light fixtures, including lamps and ballasts, and for warehouse area occupancy sensor control systems, shall be submitted for approval.

Manufacturer's Catalog; FIO.

Data composed of catalog cuts, brochures, circulars, specifications, product data, and printed information in sufficient detail and scope to verify compliance with the requirements of the contract documents.

Material, Equipment, and Fixture Lists; FIO.

A complete itemized listing of equipment and materials proposed for incorporation into the work. Each entry shall include an item number, the quantity of items proposed, and the name of the manufacturer of each item.

Installation Procedures; FIO.

Installation procedures for rotating equipment, transformers, switchgear, battery systems, voltage regulators, and grounding resistors. Procedures shall include diagrams, instructions, and precautions required to install, adjust, calibrate, and test devices and equipment.

SD-04 Drawings

Interior Electrical Equipment; FIO.

Detail drawings consisting of equipment drawings, illustrations, schedules, instructions, diagrams, and other information necessary to define the installation. Detail drawings shall show the rating of items and systems and how the components of an item and system are assembled, function together, and how they will be installed on the project. Data and drawings for component parts of an item or system shall be coordinated and submitted as a unit. Data and drawings shall be coordinated and included in a single submission. Multiple submissions for the same equipment or system are not acceptable except where prior approval has been obtained from the Contracting Officer. In such cases, a list of data to be submitted later shall be included with the first submission. Detail drawings shall show physical arrangement, construction details, connections, finishes, materials used in fabrication, provisions for conduit or busway entrance, access requirements for installation and maintenance, physical size, electrical characteristics, foundation and support details, and equipment weight. Drawings shall be drawn to scale and/or dimensioned. Optional items shall be clearly identified as included or excluded. Detail drawings shall as a minimum include:

a. Transformers.
b. Motors and rotating machinery.
c. Starters.
d. Single line electrical diagrams including primary, metering,

sensing and relaying, control wiring, and control logic.

e. Sway bracing for suspended luminaires.

Structural drawings showing the structural or physical features of major equipment items, components, assemblies, and structures, including foundations or other types of supports for equipment and conductors. These drawings shall include accurately scaled or dimensioned outline and arrangement or layout drawings to show the physical size of equipment and components and the relative arrangement and physical connection of related components. Weights of equipment, components and assemblies shall be provided when required to verify the adequacy of design and proposed construction of foundations or other types of supports. Dynamic forces shall be stated for switching devices when such forces must be considered in the design of support structures. The appropriate detail drawings shall show the provisions for leveling, anchoring, and connecting all items during installation, and shall include any recommendations made by the manufacturer.

Electrical drawings including single-line and three-line diagrams, and schematics or elementary diagrams of each electrical system; internal wiring and field connection diagrams of each electrical device when published by the manufacturer; wiring diagrams of cabinets, panels, units, or separate mountings; interconnection diagrams that show the wiring between separate components of assemblies; field connection diagrams that show the termination of wiring routed between separate items of equipment; internal wiring diagrams of equipment showing wiring as actually provided for this project. Field wiring connections shall be clearly identified.

If departures from the contract drawings are deemed necessary by the Contractor, complete details of such departures, including changes in related portions of the project and the reasons why, shall be submitted with the detail drawings. Approved departures shall be made at no additional cost to the Government.

As-Built Drawings; FIO.

The as-built drawings shall be a record of the construction as installed. The drawings shall include all the information shown on the contract drawings, deviations, modifications, and changes from the contract drawings, however minor. The as-built drawings shall be kept at the job site and updated daily. The as-built drawings shall be a full-sized set of prints marked to reflect all deviations, changes, and modifications. The as-built drawings shall be complete and show the location, size, dimensions, part identification, and other information. Additional sheets may be added. The as-built drawings shall be jointly inspected for accuracy and completeness by the Contractor's quality control representative and by the Contracting Officer prior to the submission of each monthly pay estimate. Upon completion of the work, the Contractor shall submit three full sized sets of the marked prints to the Contracting Officer for approval. If upon review, the as-built drawings are found to contain errors and/or omissions, they will be returned to the Contractor for correction. The Contractor shall correct and return the as-built drawings to the Contracting Officer for approval within ten calendar days from the time the drawings are returned to the Contractor.

SD-08 Statements

On-Site Test; FIO.

A detailed description of the Contractor's proposed procedures for on-site tests.

SD-09 Reports

Factory Test Reports; FIO.

Six copies of the information described below in 216 x 280 mm binders having a minimum of 5 rings from which material may readily be removed and replaced, including a separate section for each test. Sections shall be separated by heavy plastic dividers with tabs.

a. A list of equipment used, with calibration certifications.
b. A copy of measurements taken.
c. The dates of testing.
d. The equipment and values to be verified.
e. The conditions specified for the test.
f. The test results, signed and dated.
g. A description of adjustments made.

Field Test Plan; FIO.

A detailed description of the Contractor's proposed procedures for on-site test submitted 20 days prior to testing the installed system. No field test will be performed until the test plan is approved. The test plan shall consist of complete field test procedures including tests to be performed, test equipment required, and tolerance limits.

Field Test Reports; FIO.

Six copies of the information described below in 216 x 280 mm binders having a minimum of 5 rings from which material may readily be removed and replaced, including a separate section for each test. Sections shall be separated by heavy plastic dividers with tabs.

a. A list of equipment used, with calibration certifications.
b. A copy of measurements taken.
c. The dates of testing.
d. The equipment and values to be verified.
e. The conditions specified for the test.
f. The test results, signed and dated.
g. A description of adjustments made.
h. Final position of controls and device settings.

SD-13 Certificates

Materials and Equipment; FIO.

The label or listing of the Underwriters Laboratories, Inc., will be accepted as evidence that the materials or equipment conform to the applicable standards of that agency. In lieu of this label or listing, a statement from a nationally recognized, adequately equipped testing agency indicating that the items have been tested in accordance with required procedures and that the materials and equipment comply with all contract requirements will be accepted. However, materials and equipment installed in hazardous locations must bear the UL label unless the data submitted from other testing agency is specifically approved in writing by the Contracting Officer. Items which are required to be listed and labeled in accordance with Underwriters Laboratories must be affixed with a UL label

that states that it is UL listed. No exceptions or waivers will be granted to this requirement. Materials and equipment will be approved based on the manufacturer's published data.

For other than equipment and materials specified to conform to UL publications, a manufacturer's statement indicating complete compliance with the applicable standard of the American Society for Testing and Materials, National Electrical Manufacturers Association, or other commercial standard, is acceptable.

1.4 WORKMANSHIP

Materials and equipment shall be installed in accordance with NFPA 70, recommendations of the manufacturer, and as shown.

PART 2 PRODUCTS

Products shall conform to the respective publications and other requirements specified below. Materials and equipment not listed below shall be as specified elsewhere in this section. Items of the same classification shall be identical including equipment, assemblies, parts, and components.

2.1 CABLES AND WIRES

Conductors No. 8 AWG and larger diameter shall be stranded. Conductors No. 10 AWG and smaller diameter shall be solid, except that conductors for remote control, alarm, and signal circuits, classes 1, 2, and 3, shall be stranded unless specifically indicated otherwise. Conductor sizes and ampacities shown are based on copper, unless indicated otherwise. Conductors indicated to be No. 6 AWG or smaller diameter shall be copper. Conductors indicated to be No. 4 AWG and larger diameter shall be either copper or aluminum, unless otherwise indicated or required by manufacturer.

2.1.1 Equipment Manufacturer Requirements

When manufacturer's equipment requires copper conductors at the terminations or requires copper conductors to be provided between components of equipment, provide copper conductors or splices, splice boxes, and other work required to meet manufacturer's requirements.

2.1.2 Aluminum Conductors

Aluminum conductors shall be AA-8000 series electrical grade aluminum alloy conductors. Type EC-1350 aluminum is unacceptable.

2.1.3 Insulation

Unless indicated otherwise, or required by NFPA 70, power and lighting wires shall be 600-volt, Type THWN, THHN, or THW conforming to UL 83 or RHW conforming to UL 44, except that grounding wire may be type TW conforming to UL 83; remote-control and signal circuits shall be Type TW, THW or TF, conforming to UL 83. Where lighting fixtures require 90-degree Centigrade (C) conductors, provide only conductors with 90-degree C insulation or better.

2.1.4 Bonding Conductors

ASTM B 1, solid bare copper wire for sizes No. 8 AWG and smaller diameter; ASTM B 8, Class B, stranded bare copper wire for sizes No. 6 AWG and larger diameter.

2.2 CIRCUIT BREAKERS

2.2.1 MOLDED-CASE CIRCUIT BREAKERS

Molded-case circuit breakers shall conform to NEMA AB 1 and UL 489. Circuit breakers may be installed in panelboards, switchboards, enclosures, or combination motor controllers.

2.2.1.1 Construction

Circuit breakers shall be suitable for mounting and operating in any position. Lug shall be listed for copper and aluminum conductors in accordance with UL 486E. Single-pole circuit breakers shall be full module size with not more than one pole per module. Multi-pole circuit breakers shall be of the common-trip type having a single operating handle such that an overload or short circuit on any one pole will result in all poles opening simultaneously. Sizes of 100 amperes or less may consist of single-pole breakers permanently factory assembled into a multi-pole unit having an internal, mechanical, nontamperable common-trip mechanism and external handle ties. All circuit breakers shall have a quick-make, quick-break overcenter toggle-type mechanism, and the handle mechanism shall be trip-free to prevent holding the contacts closed against a short-circuit or sustained overload. All circuit breaker handles shall assume a position between "ON" and "OFF" when tripped automatically. All ratings shall be clearly visible.

2.2.1.2 Ratings

Voltage ratings shall be not less than the applicable circuit voltage. The interrupting rating of the circuit breakers shall be at least equal to the available short-circuit current at the line terminals of the circuit breaker and correspond to the UL listed integrated short-circuit current rating specified for the panelboards and switchboards. Molded-case circuit breakers shall have nominal voltage ratings, maximum continuous-current ratings, and maximum short-circuit interrupting ratings in accordance with NEMA AB 1. Ratings shall be coordinated with system X/R ratio.

2.2.2 Ground Fault Circuit Interrupters

UL 943. Breakers equipped with ground fault circuit interrupters shall have ground fault class, interrupting capacity, and voltage and current ratings as indicated.

2.3 CONDUIT AND TUBING

2.3.1 Electrical, Zinc-Coated Steel Metallic Tubing (EMT)

UL 797

2.3.2 Electrical Plastic Tubing and Conduit

NEMA TC 2.

2.3.3 Flexible Conduit, Steel and Plastic

General-purpose type, UL 1; liquid tight, UL 360, and UL 1660.

2.3.4 Intermediate Metal Conduit

UL 1242.

2.3.5 PVC Coated Rigid Steel Conduit

NEMA RN 1.

2.3.6 Rigid Metal Conduit

UL 6.

2.3.7 Rigid Plastic

NEMA TC 2, UL 651 and UL 651A.

2.4 CONDUIT AND DEVICE BOXES AND FITTINGS

2.4.1 Boxes, Metallic Outlet

NEMA OS 1 and UL 514C.

2.4.2 Boxes, Switch (Enclosed), Surface-Mounted

UL 98.

2.4.3 Fittings for Conduit and Outlet Boxes

UL 514B.

2.4.4 Fittings, PVC, for Use with Rigid PVC Conduit and Tubing

UL 514B.

2.5 CONDUIT COATINGS PLASTIC RESIN SYSTEM

NEMA RN 1, Type A-40.

2.6 CONNECTORS, WIRE PRESSURE

2.6.1 For Use With Copper Conductors

UL 486A.

2.6.2 For Use With Aluminum Conductors

UL 486B.

2.7 ELECTRICAL GROUNDING AND BONDING EQUIPMENT

UL 467.

2.7.1 Ground Rods

Ground rods shall be of copper-clad steel conforming to UL 467 not less than 19.1 mm in diameter by 3.1 meter in length of the sectional type

driven full length into the earth.

2.7.2 Ground Bus

The ground bus shall be bare conductor or flat copper in one piece, if practicable.

2.8 ENCLOSURES

NEMA ICS 6 or NEMA 250 unless otherwise specified.

2.8.1 Cabinets and Boxes

Cabinets and boxes with volume greater than 0.0164 cubic meters shall be in accordance with UL 50, hot-dip, zinc-coated, if sheet steel.

2.8.2 Circuit Breaker Enclosures

UL 489.

2.9 FIXTURES, LIGHTING AND FIXTURE ACCESSORIES/COMPONENTS

Standard Drawing 40-06-04 sheets referenced hereinafter and enclosed as an integral part of these specifications, additional fixtures shown on contract drawings, if any, and UL 844 for fixtures to be installed in hazardous (classified) locations. Fixtures, accessories and components, including ballasts, lampholders, lamps, starters and starter holders, shall conform to industry standards specified below.

2.9.1 Fixture, Auxiliary or Emergency

UL 924.

2.9.2 Incandescent Fixture

NEMA LE 4 for ceiling compatibility of recessed fixtures and UL 1571.

2.9.3 Fluorescent

a. Fixture: NEMA LE 4 for ceiling compatibility of recessed fixtures and UL 1570. Fixtures shall be plainly marked for proper lamp and ballast type to identify lamp diameter, wattage, color and start type. Marking shall be readily visible to service personnel, but not visible from normal viewing angles.

b. Electronic Ballast. Electronic ballasts shall consist of a rectifier, high frequency inverter, and power control and regulation circuitry. The ballasts shall be UL listed, Class P, with a Class A sound rating and shall contain no PCBs. Ballasts shall meet 47 CFR 18 for electromagnetic interference and shall not interfere with the operation of other electrical equipment. Design shall withstand line transients per IEEE C62.41, Category A. Unless otherwise indicated, the minimum number of ballasts shall be used to serve each individual fixture, using one, two, three or four lamp ballasts. A single ballast may be used to serve multiple fixtures if they are continuous mounted, factory manufactured for that installation with an integral wireway, and are identically controlled.

(a) Light output regulation shall be +/- 10%.
(b) Voltage input regulation shall be +/- 10%.
(c) Lamp current crest factor shall be no more than 1.6.
(d) Ballast factor shall be not less than 85% nor more than 100%, unless otherwise indicated.
(e) A 60 Hz filter shall be provided. Flicker shall be no more than 10% with any lamp suitable for the ballast.
(f) Ballast case temperature shall not exceed 25 degree Celsius rise above 40 degree Celsius ambient, when tested in accordance with UL 935.
(g) Total harmonic distortion shall be in the range of 10-20%.
(h) Power factor shall not be less than 0.95.
(i) Ballasts shall operate at a frequency of 20 kHz or more.
(j) Operating filament voltage shall be 2.5 to 4.5 volts.
(k) Warranty. Three year full warranty including a $10 labor allowance.

(l) Ballast Efficacy Factor (BEF) shall be in accordance with the following table. Ballasts and lamps shall be matching rapid start or instant start as indicated on the following table. If 32W-F32-T8 lamps and ballasts are used, they must be either all rapid start or all instant start.

ELECTRONIC FLUORESCENT BALLAST EFFICACY FACTORS

LAMP TYPE	TYPE OF STARTER & LAMP	NOMINAL OPERATIONAL INPUT VOLTAGE	NUMBER OF LAMPS	MIN. BALLAST EFFICACY FACTOR
40W F40 T12	rapid start	120 or 277 V	1	2.3
			2	1.2
			3	0.8
			4	0.6
34W F40 T12	rapid start	120 or 277 V	1	2.6
			2	1.3
			3	1.0
			4	0.7
40W F40 T10	rapid start	120 or 277 V	1	2.2
			2	1.1
			3	0.8
32W F32 T8	rapid or instant start	120 or 277 V	1	2.4
			2	1.4
			3	1.0
			4	0.8

*For ballasts not specifically designed for use with dimming controls

The BEF is calculated using the formula:

BEF = Ballast Factor (in percent) / Power Input

Where Power Input = Total Wattage of Combined Lamps and Ballasts.

c. Lampholders, Starters, and Starter Holders: UL 542.

2.9.4 High-Intensity-Discharge

a. Fixture: NEMA LE 4 for ceiling compatibility of recessed fixtures and UL 1572.

b. Ballasts: ANSI C82.4 for multiple supply types and UL 1029.

2.10 LOW-VOLTAGE FUSES AND FUSEHOLDERS

2.10.1 Fuses, Low Voltage Cartridge Type

NEMA FU 1.

2.10.2 Fuses, High-Interrupting-Capacity, Current-Limiting Type

Fuses, Class G, J, L and CC shall be in accordance with UL 198C.

2.10.3 Fuses, Class K, High-Interrupting-Capacity Type

UL 198D.

2.10.4 Fuses, Class H

UL 198B.

2.10.5 Fuses, Class R

UL 198E.

2.10.6 Fuses for Supplementary Overcurrent Protection

UL 198G.

2.10.7 Fuseholders

UL 512.

2.11 INSTRUMENTS, ELECTRICAL INDICATING

ANSI C39.1.

2.12 MOTORS, AC, FRACTIONAL AND INTEGRAL

Motors, ac, fractional and integral kilowatt, 373.0 kW and smaller shall conform to NEMA MG 1 and UL 1004for motors; NEMA MG 10 for energy management selection of polyphase motors; and UL 674 for use of motors in hazardous (classified) locations.

2.12.1 Rating

The kilowatt rating of motors should be limited to no more than 125 percent of the maximum load being served unless a NEMA standard size does not fall within this range. In this case, the next larger NEMA standard motor size should be used.

2.12.2 Motor Efficiencies

All permanently wired polyphase motors of 746 W or more shall meet the minimum full-load efficiencies as indicated in the following table, and as specified in this specification. Motors of 746 W or more with open, drip proof or totally enclosed fan cooled enclosures shall be high efficiency type, unless otherwise indicated. Motors provided as an integral part of motor driven equipment are excluded from this requirement if a minimum seasonal or overall efficiency requirement is indicated for that equipment by the provisions of another section.

Minimum Motor Efficiencies

kW	Std. Efficiency	High Efficiency
0.746	77.0	85.5
1.12	78.5	85.5
1.49	78.5	85.5
2.24	78.5	88.5
3.73	82.5	88.5
5.60	84.0	90.0
7.46	85.5	90.0
11.2	85.5	91.0
14.9	87.5	92.0
18.7	88.5	92.0
22.4	88.5	92.0
29.8	88.5	92.0
37.3	89.0	92.5
44.8	89.0	92.5
56.9	89.0	95.5
74.6	90.0	93.5
93.3	91.0	94.5

2.13 MOTOR CONTROLS

2.13.1 General

NEMA ICS 1, NEMA ICS 2, NEMA ICS 3 and NEMA ICS 6, and UL 508 and UL 845. Panelboards supplying non-linear loads shall have neutrals sized for 200 percent of rated current.

2.13.2 Motor Starters

Combination starters shall be provided with circuit breakers, and switches equipped with high-interrupting-capacity current-limiting fuses as indicated.

2.13.3 Thermal-Overload Protection

Each motor of 93 W (1/8 hp) or larger shall be provided with thermal-overload protection. Polyphase motors shall have overload protection in each ungrounded conductor. The overload-protection device shall be provided either integral with the motor or controller, or shall be mounted in a separate enclosure. Unless otherwise specified, the protective device shall be of the manually reset type. Single or double pole tumbler switches specifically designed for alternating-current operation only may be used as manual controllers for single-phase motors having a current rating not in excess of 80 percent of the switch rating.

2.13.4 Low-Voltage Motor Overload Relays

2.13.4.1 General

Thermal and magnetic current overload relays shall conform to NEMA ICS 2 and UL 508. Overload protection shall be provided either integral with the motor or motor controller, and shall be rated in accordance with the requirements of NFPA 70. Standard units shall be used for motor starting times up to 7 seconds. Slow units shall be used for motor starting times from 8 to 12 seconds. Quick trip units shall be used on hermetically sealed, submersible pumps, and similar motors.

2.13.4.2 Construction

Manual reset type thermal relay shall be bimetallic construction. Automatic reset type thermal relays shall be bimetallic construction. Magnetic current relays shall consist of a contact mechanism and a dash pot mounted on a common frame.

2.13.4.3 Ratings

Voltage ratings shall be not less than the applicable circuit voltage. Trip current ratings shall be established by selection of the replaceable overload device and shall not be adjustable. Where the controller is remotely-located or difficult to reach, an automatic reset, non-compensated overload relay shall be provided. Manual reset overload relays shall be provided otherwise, and at all locations where automatic starting is provided. Where the motor is located in a constant ambient temperature, and the thermal device is located in an ambient temperature that regularly varies by more than minus 10 degrees C, an ambient temperature-compensated overload relay shall be provided.

2.13.5 Automatic Control Devices

2.13.5.1 Direct Control

Automatic control devices (such as thermostats, float or pressure switches) which control the starting and stopping of motors directly shall be designed for that purpose and have an adequate kilowatt rating.

2.13.5.2 Pilot-Relay Control

Where the automatic-control device does not have such a rating, a magnetic starter shall be used, with the automatic-control device actuating the pilot-control circuit.

2.13.5.3 Manual/Automatic Selection

a. Where combination manual and automatic control is specified and the automatic-control device operates the motor directly, a double-throw, three-position tumbler or rotary switch (marked MANUAL-OFF-AUTOMATIC) shall be provided for the manual control.

b. Where combination manual and automatic control is specified and the automatic-control device actuates the pilot control circuit of a magnetic starter, the magnetic starter shall be provided with a three-position selector switch marked MANUAL-OFF-AUTOMATIC.

c. Connections to the selector switch shall be such that; only the normal automatic regulatory control devices will be bypassed when

the switch is in the Manual position; all safety control devices, such as low-or high-pressure cutouts, high-temperature cutouts, and motor-overload protective devices, shall be connected in the motor-control circuit in both the Manual and the Automatic positions of the selector switch. Control circuit connections to any MANUAL-OFF-AUTOMATIC switch or to more than one automatic regulatory control device shall be made in accordance with wiring diagram approved by the Contracting Officer unless such diagram is included on the drawings. All controls shall be 120 volts or less unless otherwise indicated.

2.14 PANELBOARDS

Dead-front construction, NEMA PB 1 and UL 67.

2.15 RECEPTACLES

2.15.1 Standard Grade

UL 498.

2.15.2 Ground Fault Interrupters

UL 943, Class A or B.

2.15.3 NEMA Standard Receptacle Configurations

NEMA WD 6.

a. Single and Duplex, 20-Ampere, 125 Volt
20-ampere, non-locking: NEMA type 5-20R, locking: NEMA type L5-20R.

b. 20-Ampere, 250 Volt

Two-pole, 3-wire grounding, non-locking: NEMA type 6-20R, locking: NEMA type L6-20R. Three-pole, 4-wire grounding, non-locking: NEMA type 15-20R, locking: NEMA type L15-20R.

2.16 Service Entrance Equipment

UL 869A.

2.17 SPLICE, CONDUCTOR

UL 486C.

2.18 Digital Power Monitor (PM)

2.18.1 General

The PM shall accept inputs from industry standard instrument transformers (120VAC secondary PTs and 5A secondary CTs). The current and voltage signals shall be digitally sampled at a rate high enough to provide accurate RMS sensing and valid data for waveform analysis beyond the 30th harmonic (fundamental of 60 Hz). The PM shall retain historical circuit data, time and date, setup and cofiguration values, and diagnostics data in the event of a control power failure, without the need for an internal battery. The PM shall be equipped with an integral LED display to provide local access to metered quantities. The following instantaneous readings

shall be reported by the PM:

a) Current, per phase RMS
b) Voltage, phase-to-phase & phase-to-neutral
c) Real power, 3-phase total for 3-phase system and 2-phase total for 1-phase system.
d) Reactive power, 3-phase total for 3-phase system and 2-phase total for 1-phase system.
e) Apparent power, 3-phase total for 3-phase system and 2-phase total for 1-phase system.
f) Power factor, 3-phase total & per phase for 3-phase system and 2-phase total & per phase for a 1-phase system.
g) Frequency
h) Temperature
i) Peak demand current, per phase
j) Peak demand, real power
k) Accumulated Energy, (MWH and MVARH)
l) Capture, display, and store phase voltage and current
m) Provide harmonic information for each circuit waveform including Total Harmonic Distortion (THD), RMS magnitudes, peak values
k) K-factor per phase

The power monitor shall provide adjustable event logging for these parameters, with read intervals settable by the user. Parameter values shall be accompanied by date/time stamps, and stored in discrete logs within non-volatile memory.

2.18.2 Parameters

Reset of the following electrical parameters shall also be allowed from the front of the Circuit Monitor:

a) Peak demand current
b) Peak demand power
c) Energy (MWH)
d) Reactive energy (MVARH)

The power monitor shall provide adjustable event logging for these parameters, with read intervals settable by the user. Parameter values shall be accompanied by date/time stamps, and stored in discrete logs within non-volatile memory.

2.18.3 Input Ranges

a) CT rating - See project drawings for ratings.
b) PT rating -The PM shall have direct voltage input up to 600V or shall be provided with PTs rated at 480:120.
c) System type 4-wire
d) Demand interval (5-60 min.)

2.18.4 Functions

All reset and setup functions shall be keyswitch-protected or password-protected to avoid accidental or prevent unauthorized changes. The power monitor shall provide field settable protection functions with trip
an and/or alarm outputs for the following:

a) Voltage Phase Loss
b) Phase Unbalance
c) Phase Reversal
d) Over/Under-Voltage
e) Delay

The power monitor shall provide event logging with recorded values and date and time stamps for these alarm functions. Event logging memory shall be separate from parameter memory.

2.18.5 Waveform Capture

The PM shall include waveform capture capability. Upon a user-initiated command, the PM shall capture and store, in nonvolatile memory, 3-phase voltage and current samples consisting of 256 data points each. These data points shall represent at least 4 cycles of each current or voltage waveform. These samples shall be evenly gathered from three current phases such that the original power signals with proper magnitude and phase relationships may be reconstructed. It shall be possible to recreate the original power signal from the data with sufficient accuracy such that steady-state power harmonic analysis will provide valid information on harmonic content for up to the 30th harmonic of the fundamental power frequency.

2.18.6 Computer Interface

The PM shall have the capability to interface to a computer network, via an RS485/RS422 serial communications port, for data collection, storage and/or printout via a local area network cable. Communications rates shall be adjustable up to 1.2 or 19.2 Kbaud. The PM shall have pulse initiation for direct connection to the EMCS system. Pulse initiators shall be solid state. The PM and all accessories shall be U.L. listed. The PM shall have a Display Keypad with large keys for operator selections. The keys shall have a raised perimeter and tactile feedback to ensure a positive response even with gloved hand operation. The keys shall be clearly marked to indicate the function and be separated into meaningful groups with display prompts to assist the user in operation. All wiring required to externally connect equipment lineups shall be installed by the Contractor. Contractor interconnection wiring requirements shall be clearly identified on the PM system drawing.

2.18.7 Start-up and Training

On-site start-up and training of the PM shall be included. Start-up shall include a complete working demonstration of the PM with simulation of possible operating conditions which may be encountered. Training shall include any documentation and hands-on exercises necesary to enable electrical operations personnel to assume full operating responsibility for the PM after completion of the training period. A one day start-up assistance and 3 day of training shall be included.

2.18.8 Software

Any software that is necessary to download event logs, clear non-volatile logging memory (by log), set-up monitor and operation parameters via built-in serial communications using a computer, and analyze captured data using a computer, in either real time or from storage, shall be provided with the user manuals. Provide one copy of the latest version available at time of submittal approval. Provide training to cover basic use of the

software.

2.19 SNAP SWITCHES

UL 20.

2.20 TAPES

2.20.1 Plastic Tape

UL 510.

2.20.2 Rubber Tape

UL 510.

2.21 TRANSFORMERS

Single- and three-phase transformers shall have two windings per phase. Full-capacity standard NEMA taps shall be provided in the primary windings of transformers unless otherwise indicated. Three-phase transformers shall be configured with delta-wye windings, except as indicated. "T" connections may be used for transformers rated 15 kVA or below.

2.21.1 Transformers, Dry-Type

Transformers shall have 220 degrees C insulation system for transformers 15 kVA and greater, and shall have 180 degrees C insulation system for transformers rated 10 kVA and less, with temperature rise not exceeding 150 degrees C under full-rated load in maximum ambient temperature of 40 degrees C. Transformer of 150 degrees C temperature rise shall be capable of carrying continuously 100 percent of nameplate kVA without exceeding insulation rating.

a. 600 Volt or Less Primary:

NEMA ST 20, UL 506, general purpose, dry-type, self-cooled, ventilated. Provide transformers in NEMA 1 enclosure. Transformers shall be quiet type with maximum sound level at least 3 decibels less than NEMA standard level for transformer ratings indicated.

2.21.2 Average Sound Level

The average sound level in decibels (dB) of transformers shall not exceed the following dB level at 300 mm for the applicable kVA rating range listed unless otherwise indicated:

kVA Range	dB Sound Level
1-50	50
51-150	55
151-300	58
301-500	60

2.22 WIRING DEVICES

NEMA WD 1 for wiring devices, and NEMA WD 6 for dimensional requirements of wiring devices.

PART 3 EXECUTION

3.1 GROUNDING

Grounding shall be in conformance with NFPA 70, the contract drawings, and the following specifications.

3.1.1 Ground Rods

The resistance to ground shall be measured using the fall-of-potential method described in IEEE Std 81. The maximum resistance of a driven ground shall not exceed 25 ohms under normally dry conditions. If this resistance cannot be obtained with a single rod, 2 additional rods not less than 1.8 meters on centers. In high-ground-resistance, UL listed chemically charged ground rods may be used. If the resultant resistance exceeds 25 ohms measured not less than 48 hours after rainfall, the Contracting Officer shall be notified immediately. Connections below grade shall be fusion welded. Connections above grade shall be fusion welded or shall use UL 467 approved connectors.

3.1.2 Grounding Conductors

A green equipment grounding conductor, sized in accordance with NFPA 70 shall be provided, regardless of the type of conduit. Equipment grounding bars shall be provided in all panelboards. The equipment grounding conductor shall be carried back to the service entrance grounding connection or separately derived grounding connection. All equipment grounding conductors, including metallic raceway systems used as such, shall be bonded or joined together in each wiring box or equipment enclosure. Metallic raceways and grounding conductors shall be checked to assure that they are wired or bonded into a common junction. Metallic boxes and enclosures, if used, shall also be bonded to these grounding conductors by an approved means per NFPA 70. When boxes for receptacles, switches, or other utilization devices are installed, any designated grounding terminal on these devices shall also be bonded to the equipment grounding conductor junction with a short jumper.

3.2 WIRING METHODS

Wiring shall conform to NFPA 70, the contract drawings, and the following specifications. Unless otherwise indicated, wiring shall consist of insulated conductors installed in rigid zinc-coated steel conduit, rigid plastic conduit, electrical metallic tubing, or intermediate metal conduit.

Wire fill in conduits shall be based on NFPA 70 for the type of conduit and wire insulations specified.

3.2.1 Conduit and Tubing Systems

Conduit and tubing systems shall be installed as indicated. Conduit sizes shown are based on use of copper conductors with insulation types as described in paragraph WIRING METHODS. Minimum size of raceways shall be 16 mm. Only metal conduits will be permitted when conduits are required for shielding or other special purposes indicated, or when required by conformance to NFPA 70. Nonmetallic conduit may be used in damp, wet or corrosive locations when permitted by NFPA 70 and the conduit or tubing system is provided with appropriate boxes, covers, clamps, screws or other appropriate type of fittings. Electrical metallic tubing (EMT) may be installed only within buildings. EMT may be installed in concrete and grout in dry locations. EMT installed in concrete or grout shall be

provided with concrete tight fittings. EMT shall not be installed in damp or wet locations, or the air space of exterior masonry cavity walls. Bushings, manufactured fittings or boxes providing equivalent means of protection shall be installed on the ends of all conduits and shall be of the insulating type, where required by NFPA 70. Only UL listed adapters shall be used to connect EMT to rigid metal conduit, cast boxes, and conduit bodies. Aluminum conduit may be used only where installed exposed in dry locations. Nonaluminum sleeves shall be used where aluminum conduit passes through concrete floors and firewalls. Penetrations of above grade floor slabs, time-rated partitions and fire walls shall be firestopped in accordance with Section 07270FIRESTOPPING. Except as otherwise specified, IMC may be used as an option for rigid steel conduit in areas as permitted by NFPA 70. Raceways shall not be installed under the firepits of boilers and furnaces and shall be kept 150 mm away from parallel runs of flues, steam pipes and hot-water pipes. Raceways shall be concealed within finished walls, ceilings, and floors unless otherwise shown. Raceways crossing structural expansion joints or seismic joints shall be provided with suitable expansion fittings or other suitable means to compensate for the building expansion and contraction and to provide for continuity of grounding. Wiring installed in underfloor raceway system shall be suitable for installation in wet locations.

3.2.1.1 Pull Wires

A pull wire shall be inserted in each empty raceway in which wiring is to be installed if the raceway is more than 15 meters in length and contains more than the equivalent of two 90-degree bends, or where the raceway is more than 45 meters in length. The pull wire shall be of No. 14 AWG zinc-coated steel, or of plastic having not less than 1.4 MPa (200 psi) tensile strength. Not less than 254 mm 10 inches of slack shall be left at each end of the pull wire.

3.2.1.2 Conduit Stub-Ups

Where conduits are to be stubbed up through concrete floors, a short elbow shall be installed below grade to transition from the horizontal run of conduit to a vertical run. A conduit coupling fitting, threaded on the inside shall be installed, to allow terminating the conduit flush with the finished floor. Wiring shall be extended in rigid threaded conduit to equipment, except that where required, flexible conduit may be used 150 mm above the floor. Empty or spare conduit stub-ups shall be plugged flush with the finished floor with a threaded, recessed plug.

3.2.1.3 Below Slab-on-Grade or in the Ground

Electrical wiring below slab-on-grade shall be protected by a conduit system. Conduit passing vertically through slabs-on-grade shall be rigid steel or IMC. Rigid steel or IMC conduits installed below slab-on-grade or in the earth shall be field wrapped with 0.254 mm thick pipe-wrapping plastic tape applied with a 50 percent overlay, or shall have a factory-applied polyvinyl chloride, plastic resin, or epoxy coating system.

3.2.1.4 Installing in Slabs Including Slabs on Grade

Conduit installed in slabs-on-grade shall be rigid steel or IMC. Conduits shall be installed as close to the middle of concrete slabs as practicable without disturbing the reinforcement. Outside diameter shall not exceed 1/3 of the slab thickness and conduits shall be spaced not closer than 3 diameters on centers except at cabinet locations where the slab thickness

shall be increased as approved by the Contracting Officer. Where conduit is run parallel to reinforcing steel, the conduit shall be spaced a minimum of one conduit diameter away but not less than 25.4 mm from the reinforcing steel.

3.2.1.5 Changes in Direction of Runs

Changes in direction of runs shall be made with symmetrical bends or cast-metal fittings. Field-made bends and offsets shall be made with an approved hickey or conduit-bending machine. Crushed or deformed raceways shall not be installed. Trapped raceways in damp and wet locations shall be avoided where possible. Care shall be taken to prevent the lodgment of plaster, dirt, or trash in raceways, boxes, fittings and equipment during the course of construction. Clogged raceways shall be cleared of obstructions or shall be replaced.

3.2.1.6 Supports

Except where otherwise permitted by NFPA 70, conduits and tubing shall be securely and rigidly fastened in place at intervals of not more than 3 meters and within 900 mm of boxes, cabinets, and fittings, with approved pipe straps, wall brackets, conduit clamps, conduit hangers, threaded C-clamps, beam clamps, or ceiling trapeze. Loads and supports shall be coordinated with supporting structure to prevent damage or deformation to the structure. Loads shall not be applied to joist bridging. Attachment shall be by wood screws or screw-type nails to wood; by toggle bolts on hollow masonry units; by expansion bolts on concrete or brick; by machine screws, welded threaded studs, heat-treated or spring-steel-tension clamps on steel work. Nail-type nylon anchors or threaded studs driven in by a powder charge and provided with lock washers and nuts may be used in lieu of expansion bolts or machine screws. Raceways or pipe straps shall not be welded to steel structures. Cutting the main reinforcing bars in reinforced concrete beams or joists shall be avoided when drilling holes for support anchors. Holes drilled for support anchors, but not used, shall be filled. In partitions of light steel construction, sheet-metal screws may be used. Raceways shall not be supported using wire or nylon ties. Raceways shall be independently supported from the structure. Upper raceways shall not be used as a means of support for lower raceways. Supporting means will not be shared between electrical raceways and mechanical piping or ducts. Cables and raceways shall not be supported by ceiling grids. Except where permitted by NFPA 70, wiring shall not be supported by ceiling support systems. Conduits shall be fastened to sheet-metal boxes and cabinets with two locknuts where required by NFPA 70, where insulating bushings are used, and where bushings cannot be brought into firm contact with the box; otherwise, a single locknut and bushing may be used. Threadless fittings for electrical metallic tubing shall be of a type approved for the conditions encountered. Additional support for horizontal runs is not required when EMT rests on steel stud cutouts.

3.2.1.7 Exposed Raceways

Exposed raceways shall be installed parallel or perpendicular to walls, structural members, or intersections of vertical planes and ceilings. Raceways under raised floors and above accessible ceilings shall be considered as exposed installations in accordance with NFPA 70definitions.

3.2.1.8 Communications Raceways

Communications raceways indicated shall be installed in accordance with the

previous requirement for conduit and tubing and with the additional requirement that no length of run shall exceed 15 meters for 15 mm and 20 mm sizes, and 30 meters for 25 mm size or larger, and shall not contain more than two 90-degree bends or the equivalent. Additional pull or junction boxes shall be installed to comply with these limitations whether oror not indicated. Inside radii of bends in conduits of 27 mm (1 inch) size or larger shall be not less than ten times the normal diameter.

3.2.2 Cables and Conductors

Installation shall conform to the requirements of NFPA 70. Covered, bare or insulated conductors of circuits rated over 600 volts shall not occupy the same equipment wiring enclosure, cable, or raceway with conductors of circuits rated 600 volts or less.

3.2.2.1 Sizing

Unless otherwise noted, all sizes are based on copper conductors and the insulation types indicated. Sizes shall be not less than indicated. Branch-circuit conductors shall be not smaller than No. 12 AWG. Conductors for branch circuits of 120 volts more than 30 meters long and of 277 volts more than 70 meters long, from panel to load center, shall be no smaller than No. 10 AWG. Class 1 remote control and signal circuit conductors shall be not less than No. 14 AWG. Class 2 remote control and signal circuit conductors shall be not less than No. 16 AWG. Class 3 low-energy, remote-control and signal circuits shall be not less than No. 22 AWG. Then conductor sizes are based on the use of THHN/THWN insulation for condutors. Higer temperature rated conductors will be permitted to be used, if the UL tested temperature rating for which the equipment in the circuit is marked are not exceeded. Conductor sizes for nonlinear loads shall be based on the use of minimum 75 degrees C insulated conductors for branch circuits and feeders.

3.2.2.2 Use of Aluminum Conductors in Lieu of Copper

Unless otherwise indicated, the Contractor may substitute aluminum conductors in lieu of copper conductors for copper sizes No. 4 AWG and larger. Should the Contractor choose to provide aluminum for conductors, the Contractor shall be responsible for increasing conductor size to have same ampacity as copper size indicated; increasing conduit and pull box sizes to accommodate larger size aluminum conductors in accordance with NFPA 70; ensuring that pulling tension rating of aluminum conductors is sufficient; providing panelboards that are UL listed for use with aluminum, and so labelled; relocating equipment, modifying equipment terminations, resizing equipment; and resolving problems that are a direct result of providing aluminum conductors in lieu of copper.

3.2.2.3 Cable Splicing

Splices shall be made in an accessible location. Crimping tools and dies shall be approved by the connector manufacturer for use with the type of connector and conductor.

a. Copper Conductors, 600 Volt and Under: Splices in conductors No. 10 AWG and smaller diameter shall be made with an insulated, pressure-type connector. Splices in conductors No. 8 AWG and larger diameter shall be made with a solderless connector and insulated with tape or heat-shrink type insulating material equivalent to the conductor insulation.

b. Aluminum Conductors, 600 Volt and Under: Splices of aluminum conductors shall be made with a UL listed, solderless, compression-type, aluminum bodied connector, stamped for AL or AL/CU. Aluminum contact surfaces of conductors shall be cleaned with a wire brush and covered with anti-oxidant joint compound prior to making of connections. Any excess joint compound shall be wiped away after installing the connector. Insulate the connection with tape or heat-shrink type insulating material equivalent to the conductor insulation.

c. Greater Than 600 Volt: Cable splices shall be made in accordance with the cable manufacturer's recommendations and Section 16375 ELECTRICAL DISTRIBUTION SYSTEM, UNDERGROUND.

3.2.2.4 Conductor Identification and Tagging

Power, control, and signal circuit conductor identification shall be provided within each enclosure where a tap, splice, or termination is made. Where several feeders pass through a common pull box, the feeders shall be tagged to indicate clearly the electrical characteristics, circuit number, and panel designation. Phase conductors of low voltage power circuits shall be identified by color coding. Phase identification by a particular color shall be maintained continuously for the length of a circuit, including junctions.

a. Color coding shall be provided for service, feeder, branch, and ground conductors. Color shall be green for grounding conductors and white for neutrals; except where neutrals of more than one system are installed in the same raceway or box, other neutral shall be white with colored (not green) stripe. The color coding for three-phase and single-phase low voltage systems shall be as follows:

120/208-volt, 3-phase: Black(A), red(B), and blue(C).
277/480-volt, 3-phase: Brown(A), orange(B), and yellow(C).
120/240-volt, 1-phase: Black and red.

b. Conductor phase and voltage identification shall be made by color-coded insulation for all conductors smaller than No. 6 AWG. For conductors No. 6 AWG and larger, identification shall be made by color-coded insulation, or conductors with black insulation may be furnished and identified by the use of half-lapped bands of colored electrical tape wrapped around the insulation for a minimum of 75 mm of length near the end, or other method as submitted by the Contractor and approved by the Contracting Officer.

c. Control and signal circuit conductor identification shall be made by color-coded insulated conductors, plastic-coated self-sticking printed markers, permanently attached stamped metal foil markers, or equivalent means as approved. Control circuit terminals of equipment shall be properly identified. Terminal and conductor identification shall match that shown on approved detail drawings. Hand lettering or marking is not acceptable.

3.3 BOXES AND SUPPORTS

Boxes shall be provided in the wiring or raceway systems where required by

NFPA 70 for pulling of wires, making connections, and mounting of devices or fixtures. Pull boxes shall be furnished with screw-fastened covers. Indicated elevations are approximate, except where minimum mounting heights for hazardous areas are required by NFPA 70. Unless otherwise indicated, boxes for wall switches shall be mounted 1.2 meters above finished floors. Switch and outlet boxes located on opposite sides of fire rated walls shall be separated by a minimum horizontal distance of 600 mm. The total combined area of all box openings in fire rated walls shall not exceed 0.0645 square meters per 9.3 square meters. Maximum box areas for individual boxes in fire rated walls vary with the manufacturer and must not exceed the maximum specified for that box in UL-03. Only boxes listed in UL-03 shall be used in fire rated walls.

3.3.1 Box Applications

Each box shall have not less than the volume required by NFPA 70 for number of conductors enclosed in box. Boxes for metallic raceways, 102 by 102 mm nominal size and smaller, shall be of the cast-metal hub type when located in normally wet locations, when flush and surface mounted on outside of exterior surfaces, or when located in hazardous areas. Cast-metal boxes installed in wet locations and boxes installed flush with the outside of exterior surfaces shall be gasketed. Boxes for mounting lighting fixtures shall be not less than 102 mm square, or octagonal, except smaller boxes may be installed as required by fixture configuration, as approved. Cast-metal boxes with 2.4 mm wall thickness are acceptable. Large size boxes shall be NEMA 1 or as shown. Boxes in other locations shall be sheet steel except that aluminum boxes may be used with aluminum conduit, and nonmetallic boxes may be used with nonmetallic conduit and tubing or nonmetallic sheathed cable system, when permitted by NFPA 70. Boxes for use in masonry-block or tile walls shall be square-cornered, tile-type, or standard boxes having square-cornered, tile-type covers.

3.3.2 Brackets and Fasteners

Boxes and supports shall be fastened to wood with wood screws or screw-type nails of equal holding strength, with bolts and metal expansion shields on concrete or brick, with toggle bolts on hollow masonry units, and with machine screw or welded studs on steel work. Threaded studs driven in by powder charge and provided with lockwashers and nuts, or nail-type nylon anchors may be used in lieu of expansion shields, or machine screws. Penetration of more than 38.1 mm (1-1/2 inches) into reinforced-concrete beams or more than 19.1 mm (3/4 inch) into reinforced-concrete joists shall avoid cutting any main reinforcing steel. The use of brackets which depend on gypsum wallboard or plasterboard for primary support will not be permitted. In partitions of light steel construction, bar hangers with 25 mm long studs, mounted between metal wall studs or metal box mounting brackets shall be used to secure boxes to the building structure. When metal box mounting brackets are used, additional box support shall be provided on the side of the box opposite the brackets. This additional box support shall consist of a minimum 300 mm long section of wall stud, bracketed to the opposite side of the box and secured by two screws through the wallboard on each side of the stud. Metal screws may be used in lieu of the metal box mounting brackets.

3.3.3 Mounting in Walls, Ceilings, or Recessed Locations

In walls or ceilings of concrete, tile, or other non-combustible material, boxes shall be installed so that the edge of the box is not recessed more than 6 mm from the finished surface. Boxes mounted in combustible walls

or ceiling material shall be mounted flush with the finished surface. The use of gypsum or plasterboard as a means of supporting boxes will not be permitted. Boxes installed for concealed wiring shall be provided with suitable extension rings or plaster covers, as required. The bottom of boxes installed in masonry-block walls for concealed wiring shall be mounted flush with the top of a block to minimize cutting of the blocks, and boxes shall be located horizontally to avoid cutting webs of block. Separate boxes shall be provided for flush or recessed fixtures when required by the fixture terminal operating temperature, and fixtures shall be readily removable for access to the boxes unless ceiling access panels are provided.

3.3.4 Installation in Overhead Spaces

In open overhead spaces, cast-metal boxes threaded to raceways need not be separately supported except where used for fixture support; cast-metal boxes having threadless connectors and sheet metal boxes shall be supported directly from the building structure or by bar hangers. Hangers shall not be fastened to or supported from joist bridging. Where bar hangers are used, the bar shall be attached to raceways on opposite sides of the box and the raceway shall be supported with an approved type fastener not more than 600 mm from the box.

3.4 DEVICE PLATES

One-piece type device plates shall be provided for all outlets and fittings. Plates on unfinished walls and on fittings shall be of zinc-coated sheet steel, cast-metal, or impact resistant plastic having rounded or beveled edges. Plates on finished walls shall be of steel with baked enamel finish or impact-resistant plastic having round or beveled edges. Screws shall be of metal with countersunk heads, in a color to match the finish of the plate. Plates shall be installed with all four edges in continuous contact with finished wall surfaces without the use of mats or similar devices. Plaster fillings will not be permitted. Plates shall be installed with an alignment tolerance of 1.6 mm. The use of sectional-type device plates will not be permitted. Plates installed in wet locations shall be gasketed and provided with a hinged, gasketed cover, unless otherwise specified.

3.5 RECEPTACLES

3.5.1 Single and Duplex, 20-ampere, 125 volt

Single and duplex receptacles shall be rated 20 amperes, 125 volts, two-pole, three-wire, grounding type with polarized parallel slots. Bodies shall be of brown or ivory to match color of switch handles in the same room or to harmonize with the color of the respective wall, and supported by mounting strap having plaster ears. Contact arrangement shall be such that contact is made on two sides of an inserted blade. Receptacle shall be side- or back-wired with two screws per terminal. The third grounding pole shall be connected to the metal mounting yoke. Switched receptacles shall be the same as other receptacles specified except that the ungrounded pole of each suitable receptacle shall be provided with a separate terminal. Only the top receptacle of a duplex receptacle shall be wired for switching application. Receptacles with ground fault circuit interrupters shall have the current rating as indicated, and shall be UL Class A type unless otherwise shown. Ground fault circuit protection shall be provided as required by NFPA 70 and as indicated on the drawings.

3.5.2 Weatherproof Applications

Weatherproof receptacles shall be suitable for the environment, damp or wet as applicable, and the housings shall be labeled to identify the allowable use. Receptacles shall be marked in accordance with UL 514A for the type of use indicated; "Damp locations", "Wet Locations", "Wet Location Only When Cover Closed". Assemblies shall be installed in accordance with the manufacturer's recommendations.

3.5.2.1 Damp Locations

Receptacles in damp locations shall be mounted in an outlet box with a gasketed, weatherproof, cast-metal cover plate (device plate, box cover) and a gasketed cap (hood, receptacle cover) over each receptacle opening. The cap shall be a flap type attached to the cover with a spring loaded hinge.

3.5.3 Receptacles, 20-Ampere, 250-Volt

Receptacles, single, 20-ampere, 250-volt, shall be molded plastic, two-pole, three-wire or three-pole, four-wire, grounding type complete with appropriate mating cord-grip plug.

3.5.4 Special-Purpose or Heavy-Duty Receptacles

Special-purpose or heavy-duty receptacles shall be of the type and of ratings and number of poles indicated or required for the anticipated purpose. Contact surfaces may be either round or rectangular. One appropriate straight or angle-type plug shall be furnished with each receptacle. Locking type receptacles, rated 30 amperes or less, shall be locked by rotating the plug. Locking type receptacles, rated more than 50 amperes, shall utilize a locking ring.

3.6 WALL SWITCHES

Wall switches shall be of the totally enclosed tumbler type. The wall switch handle and switch plate color shall harmonize with the color of the respective wall. Wiring terminals shall be of the screw type or of the solderless pressure type having suitable conductor-release arrangement. Not more than one switch shall be installed in a single-gang position. Switches shall be rated 20-ampere 120-volt for use on alternating current only. Pilot lights indicated shall consist of yoke-mounted candelabra-base sockets rated at 75 watts, 125 volts, and fitted with glass or plastic jewels. A clear 6-watt lamp shall be furnished and installed in each pilot switch. Jewels for use with switches controlling motors shall be green, and jewels for other purposes shall be red. Dimming switches shall be solid-state flush mounted, sized for the loads.

3.7 SERVICE EQUIPMENT

Service-disconnecting means shall be of the enclosed molded-case circuit breaker type as indicated in paragraph PANELBOARDS and with an external handle for manual operation. When service disconnecting means is a part of an assembly, the assembly shall be listed as suitable for service entrance equipment. Enclosures shall be sheet metal with hinged cover for surface mounting unless otherwise indicated.

3.8 PANELBOARDS

Circuit breakers and switches used as a motor disconnecting means shall be capable of being locked in the open position. Door locks shall be keyed alike. Nameplates shall be as approved. Directories shall be typed to indicate loads served by each circuit and mounted in a holder behind a clear protective covering. Busses shall be copper or aluminum.

3.8.1 Panelboards

Panelboards shall be circuit breaker or fusible switch equipped as indicated on the drawings. Switches serving as a motor disconnect means shall be of the tumbler switch and fuse type. Switches serving as motor disconnect means shall be horsepower rated in conformance with UL 98.

3.9 FUSES

Equipment provided under this contract shall be provided with a complete set of properly rated fuses when the equipment manufacturer utilize fuses in the manufacture of the equipment, or if current-limiting fuses are required to be installed to limit the ampere-interrupting capacity of circuit breakers or equipment to less than the maximum available fault current at the location of the equipment to be installed. Fuses shall have a voltage rating of not less than the phase-to-phase circuit voltage, and shall have the time-current characteristics required for effective power system coordination.

3.9.1 Cartridge Fuses; Current-Limiting Type

Cartridge fuses, current-limiting type, Class RK5 shall have tested interrupting capacity not less than 200,000 amperes. Fuse holders shall be the type that will reject all Class H fuses.

3.10 UNDERGROUND SERVICE

Unless otherwise indicated, interior conduit systems shall be stubbed out 1.5 m beyond the building wall and 600 mm below finished grade, for interface with the exterior service lateral conduits and exterior communications conduits. Outside conduit ends shall be bushed when used for direct burial service lateral conductors. Outside conduit ends shall be capped or plugged until connected to exterior conduit systems. Underground service lateral conductors will be extended to building service entrance and terminated in accordance with the requirements of Section 16375 ELECTRICAL DISTRIBUTION SYSTEM, UNDERGROUND and NFPA 70.

3.11 MOTORS

Each motor shall conform to the kW and voltage ratings indicated, and shall have a service factor and other characteristics that are essential to the proper application and performance of the motors under conditions shown or specified. Three-phase motors for use on 3-phase 208-volt systems shall have a nameplate rating of 200 volts. Unless otherwise specified, all motors shall have open frames, and continuous-duty classification based on a 40 degree C ambient temperature reference. Polyphase motors shall be squirrel-cage type, having normal-starting-torque and low-starting-current characteristics, unless other characteristics are specified in other sections of these specifications or shown on contract drawings. The Contractor shall be responsible for selecting the actual kilowatt (horsepower) ratings and other motor requirements necessary for the applications indicated. When electrically driven equipment furnished under other sections of these specifications materially differs from the design,

the Contractor shall make the necessary adjustments to the wiring, disconnect devices and branch-circuit protection to accommodate the equipment actually installed.

3.12 MOTOR CONTROL

Each motor or group of motors requiring a single control shall be provided under other sections of these specifications with a suitable controller and devices that will perform the functions as specified for the respective motors. Each motor of 93 W (1/8 hp) or larger shall be provided with thermal-overload protection. Polyphase motors shall have overload protection in each ungrounded conductor. The overload-protection device shall be provided either integral with the motor or controller, or shall be mounted in a separate enclosure. Unless otherwise specified, the protective device shall be of the manually reset type. Single or double pole tumbler switches specifically designed for alternating-current operation only may be used as manual controllers for single-phase motors having a current rating not in excess of 80 percent of the switch rating. Automatic control devices such as thermostats, float or pressure switches may control the starting and stopping of motors directly, provided the devices used are designed for that purpose and have an adequate kilowatt rating. When the automatic-control device does not have such a rating, a magnetic starter shall be used, with the automatic-control device actuating the pilot-control circuit. When combination manual and automatic control is specified and the automatic-control device operates the motor directly, a double-throw, three-position tumbler or rotary switch shall be provided for the manual control; when the automatic-control device actuates the pilot control circuit of a magnetic starter, the latter shall be provided with a three-position selector switch marked MANUAL-OFF-AUTOMATIC. Connections to the selector switch shall be such that only the normal automatic regulatory control devices will be bypassed when the switch is in the Manual position; all safety control devices, such as low- or high-pressure cutouts, high-temperature cutouts, and motor-overload protective devices, shall be connected in the motor-control circuit in both the Manual and the Automatic positions of the selector switch. Control circuit connections to any MANUAL-OFF-AUTOMATIC switch or to more than one automatic regulatory control device shall be made in accordance with wiring diagram approved by the Contracting Officer unless such diagram is included on the drawings. All controls shall be 120 volts or less unless otherwise indicated.

3.12.1 Contacts

Unless otherwise indicated, contacts in miscellaneous control devices such as float switches, pressure switches, and auxiliary relays shall have current and voltage ratings in accordance with NEMA ICS 2 for rating designation B300.

3.12.2 Safety Controls

Safety controls for boilers shall be connected to a 2-wire, 120 volt grounded circuit supplied from the associated boiler-equipment circuit. Where the boiler circuit is more than 120 volts to ground, safety controls shall be energized through a two-winding transformer having its 120 volt secondary winding grounded. Overcurrent protection shall be provided in the ungrounded secondary conductor and shall be sized for the load encountered.

3.13 MOTOR-DISCONNECT MEANS

Each motor shall be provided with a disconnecting means when required by NFPA 70 even though not indicated. For single-phase motors, a single or double pole toggle switch, rated only for alternating current, will be acceptable for capacities less than 30 amperes, provided the ampere rating of the switch is at least 125 percent of the motor rating. Switches shall disconnect all ungrounded conductors.

3.14 TRANSFORMER INSTALLATION

Three-phase transformers shall be connected only in a delta-wye or wye-delta configuration as indicated except isolation transformers having a one-to-one turns ratio. "T" connections may be used for transformers rated at 15 kVA or below. Dry-type transformers shown located within 1.5 meters of the exterior wall shall be provided in a weatherproof enclosure. Transformers to be located within the building may be provided in the manufacturer's standard, ventilated indoor enclosure designed for use in 40 degrees C ambient temperature, unless otherwise indicated.

3.15 LAMPS AND LIGHTING FIXTURES

Ballasted fixtures shall have ballasts which are compatible with the specific type and rating of lamps indicated and shall comply with the applicable provisions of the publications referenced.

3.15.1 Lamps

Lamps of the type, wattage, and voltage rating indicated shall be delivered to the project in the original cartons and installed in the fixtures just prior to the completion of the project.

3.15.1.1 Incandescent

Incandescent lamps shall be for 125-volt operation unless otherwise indicated.

3.15.1.2 Fluorescent

Fluorescent lamps for magnetic ballasts shall be as indicated and shall be of a type that will not require starter switches. Lamps shall be of the rapid-start type unless otherwise shown or approved. Fluorescent lamps for electronic ballasts shall be as indicated.Fluorescent lamps shall have 3500 degrees Kelvin color characteristics, unless otherwise noted.

3.15.1.3 High-Intensity-Discharge

High-intensity-discharge lamps shall be the high-pressure sodium type unless otherwise indicated, shown, or approved.

3.15.2 Fixtures

Fixtures shall be as shown and shall conform to the following specifications and shall be as detailed on Standard Drawing No. 40-06-04, Sheet Nos. 6, 30, 33, 36, 39, 57, and 65, which accompany and form a part of this specification for the types indicated. Illustrations shown on these sheets are indicative of the general type desired and are not intended to restrict selection to fixtures of any particular manufacturer. Fixtures of similar designs and equivalent energy efficiency, light distribution and brightness characteristics, and of equal finish and

quality will be acceptable if approved. In suspended acoustical ceilings with fluorescent fixtures, the fluorescent emergency light fixtures shall be furnished with self-contained battery packs.

3.15.2.1 Accessories

Accessories such as straps, mounting plates, nipples, or brackets shall be provided for proper installation. Open type fluorescent fixtures with exposed lamps shall have a wire-basket type guard.

3.15.2.2 Suspended Fixtures

Suspended fixtures shall be provided with swivel hangers in order to ensure a plumb installation. Pendants, rods, or chains 1.2 meters or longer excluding fixture, shall be braced to limit swinging. Bracing shall be 3 directional, 120 degrees apart. Single unit suspended fluorescent fixtures shall have twin-stem hangers. Multiple unit or continuous-row fluorescent units shall have a tubing or stem for wiring at one point, and a tubing or rod suspension provided for each length of chassis including one at each end. Maximum distance between adjacent tubing or stems shall be 3.1 meters. Rods shall be of not less than 4.8 mm (3/16 inch) diameter. Flexible raceway shall be installed to each fixture from an overhead junction box. Fixture to fixture wiring installation is allowed only when fixtures are installed end to end in a continuous run.

3.15.2.3 Ceiling Fixtures

Ceiling fixtures shall be coordinated with and suitable for installation in, on, or from the suspended ceiling provided under other sections of these specifications. Installation and support of fixtures shall be in accordance with the NFPA 70 and manufacturer's recommendations. Recessed fixtures shall have adjustable fittings to permit alignment with ceiling panels. Recessed fixtures installed in fire-resistive type of suspended ceiling construction shall have the same fire rating as the ceiling or shall be provided with fireproofing boxes having materials of the same fire rating as the ceiling panels, in conformance with UL-03. Surface-mounted fixtures shall be suitable for fastening to the structural support for ceiling panels.

3.15.2.4 Sockets

Sockets of industrial, strip, and other open type fluorescent fixtures shall be of the type requiring a forced movement along the longitudinal axis of the lamp for insertion and removal of the lamp.

3.15.3 Photocell

Where indicated, luminaires shall be controlled by a photo-control element mounted on the roof facing north. The photo-control element shall have an adjustable operating range of approximately .5 to 5.0 footcandles and shall be mounted in a weatherproof assembly.

3.15.4 OCCUPANCY SENSORS

Occupancy sensors shall be installed in rooms as indicated and shall be connected to power as indicated. Occupancy sensors shall be coordinated with and be suitable for installation as indicated on the electrical drawings. Installation and support of unit shall be in accordance with the NFPA 70 and manufacturer's recommendations.

3.15.4.1 Operation

Occupancy sensors shall be U.L. listed and utilize infrared technology, unless indicated to be the ultrasonic type, with built-in timing and load control relay driving circuitry. When the sensor detects motion, a signal (voltage pulse, etc.) is transmitted to a relay which turns on the lights instantly. If no motion occurs within a predetermined period of time, the lights are turned off. To ensure continuous light while people are present, the timing shall be capable of being set between a range of time. Should the unit ever fail, the load shall be capable of being turned on quickly and easily by an ON/AUTO/OFF switch or override/bypass pin or dip switch.

3.15.4.2 Equipment Specifications

3.15.4.2.1 Description

Sensor Types - Range and Coverage:

Aisle Sensor: Sensor shall be a Wattstopper catalog number CX-100-3 or CX-105-3 or approved equal. Sensor shall be mounted over the aisle covered, looking down. Sensor shall cover an area 3000mm wide by 23m long looking straight down, based on a rated mounting height of 9000mm.

Conical Sensor: Sensor shall be a Wattstopper catalog number CI-200 or approved equal. Sensor shall have a conical coverage pattern of 13410mm diameter based on a rated mounting height of 2400mm.

Ultrasonic Sensor: Sensor shall be a Wattstopper catalog number WT-1005 or approved equal. Sensor shall utilize ultrasonic sensing technology. Sensor shall have a coverage of 100 sq. meters and 360 degrees, based on a rated mounting height of 2400mm.

Occupancy Sensor, 90-Degree Coverage, Small Room: Sensor shall be a Wattstopper catalog number WPIR or approved equal. Sensor shall be designed for corner mounting to cover a small office.

Occupancy Sensor, 90-degree Coverage, Medium-Size Room/Area: Sensor shall be a Wattstopper catalog number CX-100 or CX-105 or approved equal. Sensor shall cover an area 90-degrees wide with a radius of 16.7m, based on a rated mounting height of 3000mm.

Note: When reducing or exceeding the rated mounting heights listed above, the area covered will be adjusted per manufacturer's recommendations.

Mounting	Pendant Mounted, Ceiling Surface Mounted or Wall mounted per plans (mount per manufacturer's recommendation).
Voltage	15-24VDC
Wiring	Comply with NFPA 70 Section 725-52. Power and Class 2 wiring shall not be in the same conduit.
Housing	Thermoplastic
Color	White or off-white

Size & Weight	As small and light as possible. Unit shall be approximately 80 mm x 37 mm x 76 mm (L-D-W).
Sensitivity	Normal sensitivity to human movement indoors.
Timing delay range	Lower delay shall not be longer than 30 seconds and upper delay shall not be less than 30 minutes.
Warranty	Five years.

Note: When reducing or exceeding the manufactuer's nominal mounting heights, the area covered will be adjusted per manufacturer's recommendations.

Power supply units, used to provide 15-24VDC control power to the occupancy sensor(s) and incorporate an integral relay that provides power to the lighting fixtures, shall have the following: a self-contained transformer relay system; secondary voltage of 15-24VDC and at least 100 mA output; physical size of 41 mm x 70 mm x 41 mm approximately, with a 12 mm snap in nipple; and shall be UL listed. The power supply units shall be available in 277 volts. The relay contacts of each power units shall be UL listed for 20 amps at 277 volts for fluorescent loads. Power units shall have a minimum 5-year warranty. Warranty shall provide for replacement of supply units in the event that relays are damaged by power surges, such as those caused by the starting currents of lamp ballasts.

Slave power units, which shall be equivalent to a power supply unit but without the transformer, shall not be used except as a master relay device as indicated on the project drawings.

All sensors shall be provided with an indicator light to verify that motion is being detected and that the unit is operating.

All occupancy sensors shall be low voltage, 15-24VDC, have a rugged solid-state design, and be designed and manufactured specifically for control of lighting for energy conservation.

All sensors shall be manufactured by the same company and shall be aesthetically compatible, i.e., from the same product line or generation of products.

3.16 Execution

All rooms, aisles or areas covered shall have (100) percent volumetric coverage. Locations to be provided with sensors are indicated on the drawings. The contractor shall provide additional sensors if required to properly and completely cover each respective area. Contractor shall use masking tape which comes with sensors to adjust their coverage as needed to match the desired coverage area described on the project drawings. Ultrasonic-type sensors shall be placed 1200mm away from supply ducts, 1800mm from horizontal discharge ducts, and 150mm from power packs. Proper judgment must be exercised in executing the work so as to ensure the best possible installation in the available space and to overcome local difficulties due to space limitations or interference with miscellaneous equipment or structural components.

Exact location of control unit hardware boxes shall be based on

manufacturer's recommendations. Control unit hardware may be mounted directly to the light fixtures controlled, if recommended by light fixture and control unit hardware manufacturers (if hibay light fixture manufacturer factory installs power packs in hibay fixtures, contractor shall ensure that wiring of power packs at fixtures is coordinated with the control diagrams in the project drawings to achieve the desired control). Control units shall be concealed in finished areas but still accessible. Provide access panel in rooms with gypboard ceilings where necessary for access.

Sensor and control unit manufacturer must have experience in the lighting controls industry equal to a minimum of five (5) years.

3.17 Sensor Test and Adjustment

At the time each sensor is installed, each sensor shall be adjusted as follows:

1. Sensors utilizing sensitivity adjustments shall be factory pre-adjusted for proper detection of motion appropriate to the usage of the aisle, area or room.

2. Set time delay at approximately 20 minutes, after setting time mode to verify sensor control and power supply unit operation of light.

3. Check indicator light of each sensor to verify that motion is being detected in the range desired.

4. Ensure that there are no obstructions which could block proper sensor coverage, thereby minimizing sensor detection zone.

5. NOTE: Occupancy sensors may be affected by various conditions in the room. It may be necessary for the Contractor to make adjustments, change the location or type of sensor or add more sensors to obtain proper operation in a specific or room, including power supply units. The Contractor shall provide the manufacturer of the occupancy sensors with a full set of architectural and electrical lighting drawings to insure that the manufacturer recommends and specifies the proper type, location, quantity and voltage of the sensors in each room. The Contractor shall provide the Contracting Officer one set of the manufacturer's marked up project architectural floor plans indicating the manufacturer's recommended location, model number and quantity of sensors per room. The project electrical lighting drawings show ONE method for coverage of rooms using occupancy sensors. Thus, the Contractor shall have final responsibility for insuring proper operation of occupancy sensor(s) and coverage in each room, including any necessary change of sensor and/or adjustments. The Contractor is also responsible for acquiring approval from the Contracting Officer for any changes or deviations from project drawings and specifications. Installation of the occupancy sensor control system shall be inspected and approved by the manufacturer of the occupancy sensor system.

3.18 Emergency Light Sets

Emergency light sets shall conform to UL 924 with the number of heads as indicated. Sets shall be permanently connected to the wiring system by

conductors installed in short lengths of flexible conduit.

3.19 EQUIPMENT CONNECTIONS

All wiring not furnished and installed under other sections of the specifications for the connection of electrical equipment as indicated on the drawings shall be furnished and installed under this section of the specifications. Connections shall comply with the applicable requirements of paragraph WIRING METHODS. Flexible conduits 2 m or less in length shall be provided to all electrical equipment subject to periodic removal, vibration, or movement and for all motors. All motors shall be provided with separate grounding conductors. Liquid-tight conduits shall be used in damp or wet locations.

3.19.1 Motors and Motor Control

Motors and motor controls shall be installed in accordance with NFPA 70, the manufacturer's recommendations, and as indicated. Wiring shall be extended to motors and motor controls and terminated.

3.20 CIRCUIT PROTECTIVE DEVICES

The Contractor shall calibrate, adjust, set and test each new adjustable circuit protective device to ensure that they will function properly prior to the initial energization of the new power system under actual operating conditions.

3.21 PAINTING AND FINISHING

Field-applied paint on exposed surfaces shall be provided under Section 09900 PAINTING, GENERAL.

3.22 REPAIR OF EXISTING WORK

The work shall be carefully laid out in advance, and where cutting, channeling, chasing, or drilling of floors, walls, partitions, ceiling, or other surfaces is necessary for the proper installation, support, or anchorage of the conduit, raceways, or other electrical work, this work shall be carefully done, and any damage to building, piping, or equipment shall be repaired by skilled mechanics of the trades involved at no additional cost to the Government.

3.23 FIELD TESTING

Field testing shall be performed in the presence of the Contracting Officer. The Contractor shall notify the Contracting Officer 7 days prior to conducting tests. The Contractor shall furnish all materials, labor, and equipment necessary to conduct field tests. The Contractor shall perform all tests and inspection recommended by the manufacturer unless specifically waived by the Contracting Officer. The Contractor shall maintain a written record of all tests which includes date, test performed, personnel involved, devices tested, serial number and name of test equipment, and test results. All field test reports will be signed and dated by the Contractor.

3.23.1 Safety

The Contractor shall provide and use safety devices such as rubber gloves, protective barriers, and danger signs to protect and warn personnel in the

test vicinity. The Contractor shall replace any devices or equipment which are damaged due to improper test procedures or handling.

3.23.2 Ground-Resistance Tests

The resistance of each grounding electrode and each grounding electrode system shall be measured using the fall-of-potential method defined in IEEE Std 81. Soil resistivity in the area of the grid shall be measured concurrently with the grid measurements. Ground resistance measurements shall be made before the electrical distribution system is energized and shall be made in normally dry conditions not less than 48 hours after the last rainfall. Resistance measurements of separate grounding electrode systems shall be made before the systems are bonded together below grade. The combined resistance of separate systems may be used to meet the required resistance, but the specified number of electrodes must still be provided.

a. Single rod electrode - 25 ohms.

3.23.3 Cable Tests

The Contractor shall be responsible for identifying all equipment and devices that could be damaged by application of the test voltage and ensuring that they have been properly disconnected prior to performing insulation resistance testing. An insulation resistance test shall be performed on all low and medium voltage cables after the cables are installed in their final configuration and prior to energization. The test voltage shall be 500 volts DC applied for one minute between each conductor and ground and between all possible combinations of conductors. The minimum value of resistance shall be:

R in megohms = (rated voltage in kV + 1) x 304.8/(length of cable in meters)

Each cable failing this test shall be repaired or replaced. The repaired cable system shall then be retested until failures have been eliminated.

3.23.3.1 Low Voltage Cable Tests

a. Continuity test.
b. Insulation resistance test.

3.23.4 Motor Tests

a. Phase rotation test to ensure proper directions.
b. Operation and sequence of reduced voltage starters.
c. High potential test on each winding to ground.
d. Insulation resistance of each winding to ground.
e. Vibration test.
f. Dielectric absorption test on motor [and starter].

3.23.5 Dry-Type Transformer Tests

The following field tests shall be performed on all dry-type transformers .

a. Insulation resistance test phase-to-ground, each phase.
b. Turns ratio test.

3.23.6 Circuit Breaker Tests

The following field tests shall be performed on circuit breakers.

3.23.6.1 Circuit Breakers, Molded Case

a. Insulation resistance test phase-to-phase, all combinations.
b. Insulation resistance test phase-to-ground, each phase.
c. Closed breaker contact resistance test.
d. Manual operation of the breaker.

3.24 OPERATING TESTS

After the installation is completed, and at such time as the Contracting Officer may direct, the Contractor shall conduct operating tests for approval. The equipment shall be demonstrated to operate in accordance with the specified requirements. An operating test report shall be submitted in accordance with paragraph FIELD TEST REPORTS.

3.25 ACCEPTANCE

Final acceptance of the facility will not be given until the Contractor has successfully completed all tests and after all defects in installation, material or operation have been corrected.

-- End of Section --

TYPE 112
Single

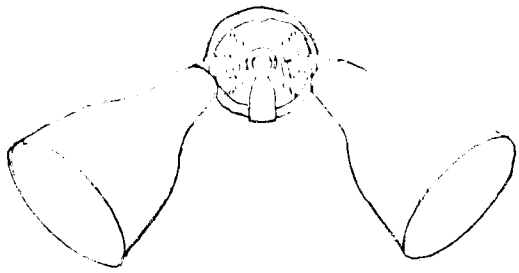

TYPE 113
Double

Exterior Incandescent Floodlight for
Soffitt or Wall Outlet Box Mounting

Suffix	Description
A	Satin aluminum finish
B	Textured black finish

Fixture shall conform to UL 1571. Fixture shall be suitable for use in wet locations. The fixture shall consist of the indicated number of lampholder housing units with adjustable attachment arm and box canopy. The housing, attachment arm, and canopy shall be cast aluminum and shall be finished as specified. Satin aluminum finish shall have clear acrylic lacquer protective coating. The housing arm shall attach to the box canopy with 1/2-inch connection. A locknut shall be provided to secure the arm in the desired position. The housing arm shall be provided with a calibrated swivel with serrated locking teeth and compression screw to hold the fixture housing in the desired position. Housing shall be large enough to provide ample finger room for ease of lamp replacement. Fixture shall be rated for PAR-38 standard lamps of 52 to 165 watts. Lampholder shall be medium base glazed porcelain. Fixture shall be furnished with weatherproof gasket. Fixture shall be prewired.

Fixture types indicated on this sheet shall also conform to requirements specified and indicated in the contract documents.

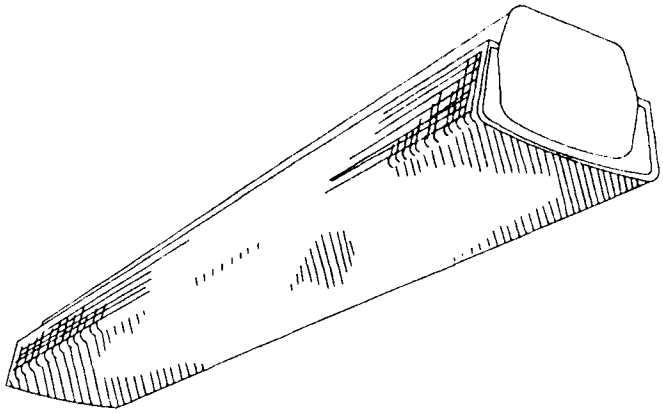

TYPE 218	TYPE 219
7-inch by 48-inch	7-inch by 96-inch
One Lamp	Two Lamps

Surface, Ceiling Mounted, Wraparound Fluorescent Fixture

Fixture shall be constructed of cold-rolled steel and shall conform to UL 1570. The fixture chassis shall be die-formed. Back housing shall be one piece, solid along its entire length, and shall have sufficient knockouts for conventional pendant and surface mounting. The lens shall be of 100 percent virgin acrylic plastic not less than 1/8-inch nominal thickness. The lens shall be easily removed without the use of tools and shall be held in place by concealed hinges and latches, by reinforcing ribs along the edges, or by resting in place on the end plate of the fixture. The lens and end caps or fittings shall fit so there is no light leakage. Removable white plastic or baked white enamel metal end fittings shall be provided on each end of each fixture to permit the installation of continuous rows of fixtures, the closure of ends of fixtures in a continuous row, and the closure of the ends of individually mounted fixtures. All metal parts shall receive a rust inhibitive coating and a white baked enamel finish. Type 218 fixture shall use a single-lamp ballast for individually mounted fixtures and where single-lamp fixtures occur at the ends of continuous rows. Two-lamp ballasts shall be provided for the Type 219 fixtures and for tandem mounted Type 218 fixtures. Type 219 fixture shall be provided with a 2-piece lens, each approximately 48 inches in length, and a light concealing center strap. Standard ballast(s) shall be the Class P, high power factor type which has been approved for the application by the Certified Ballast Manufacturers. Fixture shall be prewired.

Fixture types indicated on this sheet shall also conform to requirements specified and indicated in the contract documents.

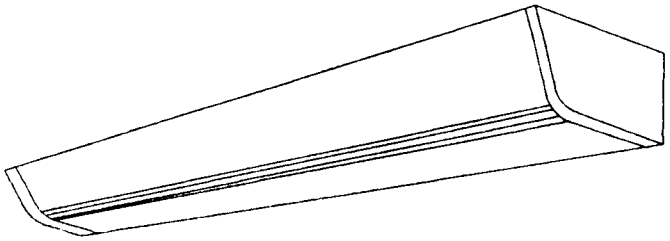

TYPE 224	TYPE 225
One Lamp	Two Lamps
48-inch Length	48-inch Length

Enclosed, Wall Mounted, Direct Fluorescent Fixture

Fixture shall conform to UL 1570. Housing shall be of cold-rolled, die-formed steel. The back housing shall be one piece, solid along its entire length. End plates shall be die-formed and shall be fastened securely to the housing in a manner that permits no light leakage. All metal parts shall receive a rust inhibitive coating and a baked white enamel finish coat. Lens shall be prismatic, one piece, 0.125 inch nominal thickness, and 100 percent virgin acrylic. The lens shall be easily removed without the use of tools and shall be held in place by concealed hinges, by reinforcing ribs along the edges, or by resting on the end plates. The lens shall be attached to the housing so there is no light leakage. Standard ballast(s) shall be the Class P, high power factor type which has been approved for the application by the Certified Ballast Manufacturers. Fixture shall be prewired.

Fixture types indicated on this sheet shall also conform to requirements specified and indicated in the contract documents.

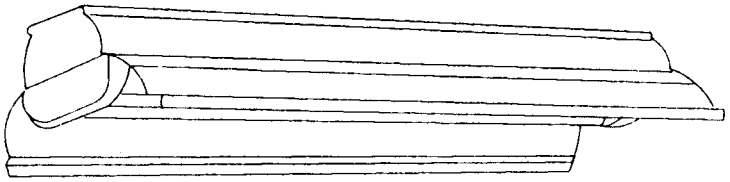

TYPE 230
Suspension Mounted, Industrial,
Open Type Fluorescent Fixture, 4-Foot

First-Suffix	Second-Suffix	Description
A		Two lamps
B		Three lamps
	1	8 to 15 percent uplight
	2	18 to 25 percent uplight

Fixture shall conform to UL 1570. Standard ballast(s) shall be the Class P, high power factor type approved for the application by the Certified Ballast Manufacturers. Channel housing, end fittings, and reflector shall be constructed with die-formed, cold-rolled steel. Reflector finish shall be porcelain enamel, baked white enamel or aluminum oxide. Sockets shall be of the type requiring a forced movement along the longitudinal axis of the lamp for insertion and removal of the lamp. Fixture shall be prewired. Fluoresent tubes shall be protected by a virgin acrylic protective sleeve and clear plastic vented end caps.

Fixture type indicated on this sheet shall also conform to requirements specified and indicated in the contract documents.

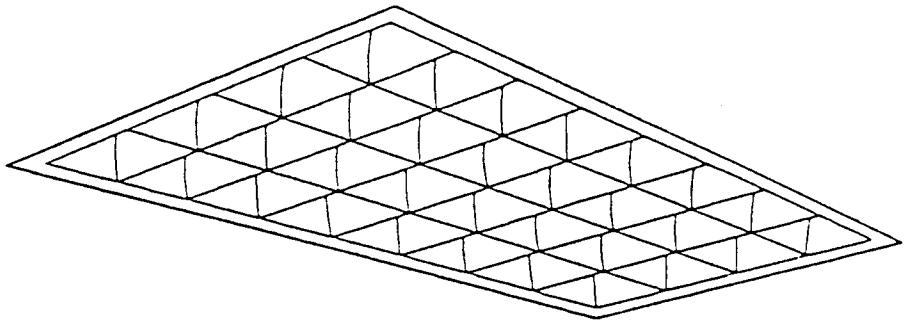

TYPE 234	TYPE 235	TYPE 236
Static Troffer	Air Handling Troffer	Heat Removal/ Transfer Troffer

Recessed Fluorescent Fixture, 2-foot by 4-foot, With Parabolic Louver

First Suffix	Second Suffix	Description
A		Two-lamp, 12-cell louver
B		Three-lamp, 18-cell louver
C		Four-lamp, 32-cell louver
	1	Type 200 emergency unit

Fixture shall conform to UL 1570. Housing, trim flanges if any, shall be die-formed, cold-rolled steel embossed if necessary to ensure structural rigidity. Metal parts to be painted shall receive one or more rust inhibitive coatings before application of the finish coat. Reflective surfaces shall be finished to provide an initial and minimum reflectance of not less than 85 percent. The louver shall be the anodized or semi-specular finished aluminum type consisting of inter- connected cellular baffles not less than three nor more than four inches in depth. The louver shall be hinged on either longitudinal side using die-formed steel hinges, and shall be held securely in place by the hinges and spring-steel latches that are inconspicuous or concealed from view when louver is in place and latches are closed. Securing the louver in place shall prevent light leakage and movement of the louver when subjected to normal vibrations. The ballast(s) and fixture wiring shall be concealed by a snap-in type of metal cover which can be removed and replaced without the use of tools. Standard ballast(s) shall be of the Class P, high power factor type that has been approved by the Certified Ballast Manufacturers for the application. Ballast(s), lampholders, louver and the wireway cover shall be removable and replaceable without removal of the fixture from the ceiling. Fixture shall be prewired.

Fixture type indicated on this sheet shall also conform to requirements specified and indicated in the contract documents.

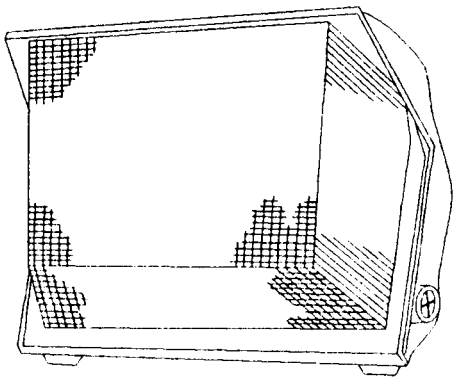

TYPE 503

High Intensity Discharge Fixture for Exterior Wall Mounting,
High Output

Suffix	Description
	Rated for:
A	250 watt mercury vapor lamp
B	400 watt mercury vapor lamp
C	250 watt high pressure sodium lamp
D	400 watt high pressure sodium lamp

Fixture shall conform to UL 1572 and shall be rated for use in wet locations. The fixture housing, door assembly, and backplate shall be die-cast aluminum. The door assembly shall have integral cast aluminum hinges. The door assembly shall be held securely to the fixture housing with a stainless steel safety strap when the door is in the open position. The door assembly shall be held firmly against a sealing gasket between the fixture door and housing by stainless steel latches or with stainless steel or brass captive screws when the fixture door is closed. The refractor shall be prismatic borosilicate glass or polycarbonate resin. The refractor shall be gasketed and securely held in the door frame, but shall be easily removed for replacement using a common tool. The reflector shall be aluminum with the manufacturer's standard commercial product finish suitable for light source provided. The fixture shall have the manufacturers standard protective coating. Cast knockouts shall be provided in the backplate for recessed outlet box mounting. A 3/4-inch threaded and plugged conduit entry shall be provided on each side. Ballast shall be of the constant wattage autotransformer type for mercury vapor lamps and the regulating type for high pressure sodium lamps. The ballast shall be capable of starting and operating the lamp at ambient temperatures ranging from minus 20 degrees F to 105 degrees F. The fixture shall be prewired, and shall have a field adjustable, mogul base glazed porcelain lampholder.

Fixture type indicated on this sheet shall also conform to requirements specified and indicated in the contract documents

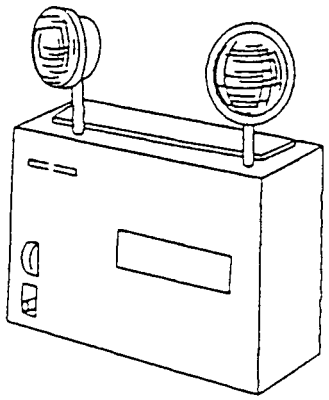

TYPE 603

6-Volt Emergency Battery Pack Unit with Two Floodlights

Unit shall conform to UL 924, NFPA 101, and shall meet or exceed the NFPA 70 time and voltage requirements. The unit shall be dual-rated for use on either 120-Volt or 277-Volt alternating current power supplies. Following sustained loss of the normal power supply, the unit shall be capable of automatically and instantaneously illuminating the two 6-Volt lighting fixtures for a period of not less than 90 minutes at a battery voltage in excess of 87.5 percent of the nominal voltage rating. The battery shall be the nickel-cadmium, pocket plate type designed to be maintenance free during the expected battery life, and shall be warranted for not less than 3 years from the date of the purchase of the unit, and shall be field replaceable without requiring removal of other components. The battery charger shall be the solid-state type and shall provide a continuous, variable, current limited, filtered and regulated charge rate. The battery and charger shall be contained in a steel cabinet not less than 18 gauge thickness with an enamel finish, unless otherwise approved, which shall be equipped with a push-to-test switch and a meter to indicate battery voltage when the switch is closed. Mounting brackets or shelf shall be provided, complete with all mounting hardware, all with a finish to match the finish or color of the cabinet. The unit shall be prewired and equipped with two 6-volt, 5-8 watt floodlights as indicated.

Fixture type indicated on this sheet shall also conform to requirements specified and indicated in the contract documents.

SECTION TABLE OF CONTENTS

DIVISION 16 - ELECTRICAL

SECTION 16528

EXTERIOR LIGHTING

PART 1 GENERAL

1.1 REFERENCES
1.2 SYSTEM DESCRIPTION
1.2.1 Lighting System
1.2.2 Nameplates
1.2.3 Standard Products
1.2.4 Year 2000 Compliant Equipment
1.3 CORROSION PROTECTION
1.3.1 Aluminum Materials
1.3.2 Ferrous Metal Materials
1.3.2.1 Hardware
1.3.2.2 Equipment
1.3.3 Finishing
1.4 SUBMITTALS

PART 2 PRODUCTS

2.1 STANDARD PRODUCT
2.2 BRACKET ARMS
2.2.1 On Wood Poles
2.2.2 Floodlight Brackets
2.3 GROUND RODS
2.4 POLES
2.4.1 Wood Poles
2.4.2 Anchor Bolts
2.5 POLE LINE HARDWARE
2.6 ELECTRICAL ENCLOSURES
2.6.1 Interior Enclosures
2.6.2 Exposed-to-Weather Enclosures
2.6.3 Corrosion Resistant Enclosures
2.7 ILLUMINATION
2.7.1 General Lighting
2.8 LAMPS AND BALLASTS, HIGH INTENSITY DISCHARGE (HID) SOURCES
2.8.1 Metal-Halide
2.8.2 Remote Ballast Boxes, and Ballast
2.9 LIGHTING CONTROL EQUIPMENT
2.9.1 Photo-Control Devices
2.9.2 Manual Control Switches
2.9.3 Safety Switches
2.9.4 Magnetic Contactor
2.10 PHOTOMETRIC DISTRIBUTION CLASSIFICATION
2.11 FIXTURES
2.11.1 Accessories
2.11.2 In-Line Fuse

PART 3 EXECUTION

3.1 GENERAL
3.2 ENCLOSURE PENETRATIONS
3.3 PREVENTION OF CORROSION
3.3.1 Aluminum
3.3.2 Steel Conduits
3.3.3 Cold Galvanizing
3.4 POLE INSTALLATION
3.4.1 Pole Brackets
3.4.2 Concrete Foundations
3.4.3 Rigid Steel Conduit Ells
3.4.4 Wood Pole Installation
3.5 LIGHTING
3.5.1 Lamps
3.5.2 Fixture Installation
3.5.3 Lighting Performance
3.6 LIGHTING CONTROL SYSTEM
3.6.1 Photo-Control
3.6.2 Time Control Switches
3.6.3 Manual and Safety Switches
3.6.4 Magnetic Contactors
3.7 GROUNDING
3.7.1 Lighting Pole
3.7.2 Pullbox
3.8 TESTS
3.8.1 Testing For Lighting
3.8.2 Operating Test

-- End of Section Table of Contents --

SECTION 16528

EXTERIOR LIGHTING

PART 1 GENERAL

1.1 REFERENCES

The publications listed below form a part of this specification to the extent referenced. The publications are referred to in the text by basic designation only.

AMERICAN ASSOCIATION OF STATE HIGHWAY AND TRANSPORTATION OFFICIALS (AASHTO)

AASHTO LTS-2	(1985; Rev 1986, 1987, 1988) Standard Specifications for Structural Supports for Highway Signs, Luminaires and Traffic Signals

AMERICAN NATIONAL STANDARDS INSTITUTE (ANSI)

ANSI C2	(1997) National Electrical Safety Code
ANSI C78.1375	(1990) 400-Watt, M59 Single-Ended Metal-Halide Lamps
ANSI C78.1376	(1990) 1000-Watt, M47 Single-Ended Metal-Halide Lamps
ANSI C82.4	(1992) Ballasts for High-Intensity-Discharge and Low-Pressure Sodium Lamps (Multiple-Supply Type)
ANSI C135.1	(1979) Galvanized Steel Bolts and Nuts for Overhead Line Construction
ANSI C135.14	(1979) Staples with Rolled or Slash Points for Overhead Line Construction
ANSI C136.10	(1988) Locking-type Photocontrol Devices and Mating Receptacles - Physical and Electrical Interchangeability and Testing for Roadway Lighting Equipment
ANSI C136.13	(1992) Metal Brackets for Wood Poles
ANSI O5.1	(1992) Specifications and Dimensions for Wood Poles

AMERICAN SOCIETY FOR TESTING AND MATERIALS (ASTM)

ASTM A 123	(1989a) Zinc (Hot-Dip Galvanized) Coatings on Iron and Steel Products
ASTM A 153	(1982; R 1987) Zinc Coating (Hot-Dip) on

	Iron and Steel Hardware
ASTM A 575	(1989) Steel Bars, Carbon, Merchant Quality, M-Grades
ASTM A 576	(1990b) Steel Bars, Carbon, Hot-Wrought, Special Quality
ASTM B 117	(1994) Operating Salt Spray (Fog) Testing Apparatus
ASTM D 1654	(1992) Evaluation of Painted or Coated Specimens Subjected to Corrosive Environments

AMERICAN WOOD-PRESERVERS' ASSOCIATION (AWPA)

AWPA C4	(1993) Poles - Preservative Treatment by Pressure Processes
AWPA P1/P13	(1991) Standard for Coal Tar Creosote for Land and Fresh Water and Marine (Coastal Water) Use
AWPA P8	(1991) Standard for Oil-Borne Preservatives
AWPA P9	(1992) Standard for Solvents and Formulations for Organic Preservative Systems

ILLUMINATING ENGINEERING SOCIETY OF NORTH AMERICA (IESNA)

IESNA ARP-8	(1983) Roadway Lighting

NATIONAL ELECTRICAL MANUFACTURERS ASSOCIATION (NEMA)

NEMA 250	(1991) Enclosures for Electrical Equipment (1000 Volts Maximum)
NEMA ICS 1	(1993) Industrial Controls and Systems
NEMA ICS 2	(1993) Industrial Control Devices, Controllers and Assemblies
NEMA ICS 6	(1993) Enclosures for Industrial Control and Systems

NATIONAL FIRE PROTECTION ASSOCIATION (NFPA)

NFPA 70	(1996) National Electrical Code

UNDERWRITERS LABORATORIES (UL)

UL 98	(1994; Rev Feb 1995) Enclosed and Dead-Front Switches
UL 1029	(1994) High-Intensity-Discharge Lamp Ballasts

UL 1572 (1991; Rev thru Jul 1994) High Intensity Discharge Lighting Fixtures

1.2 SYSTEM DESCRIPTION

1.2.1 Lighting System

The lighting system shall be configured as specified and shown. The system shall include all fixtures, hardware, poles, cables, connectors, adapters and appurtenances needed to provide a fully functional lighting system.

1.2.2 Nameplates

Each major component of equipment shall have a nonferrous metal or engraved plastic nameplate which shall show, as a minimum, the manufacturer's name and address, the catalog or style number, the electrical rating in volts, and the capacity in amperes or watts.

1.2.3 Standard Products

Materials and equipment shall be standard products of manufacturer regularly engaged in the manufacture of such products. Items of equipment shall essentially duplicate equipment that has been in satisfactory use at least 2 years prior to bid opening.

1.2.4 Year 2000 Compliant Equipment

Where applicable, all equipment specified shall be Year 2000 compliant and shall be able to accurately process date/time data (including, but not limited to, calculating, comparing, and sequencing) from, into, and between the twentieth and twenty-first centuries, including leap year calculations, when used in accordance with the product documentation provided by the contractor, provided that all products (e.g. hardware, software, firmware) used in combination with other information technology, shall accurately process date/time data if the other information technology properly exchanges date/time data with it.

1.3 CORROSION PROTECTION

1.3.1 Aluminum Materials

Aluminum shall not be used.

1.3.2 Ferrous Metal Materials

1.3.2.1 Hardware

Ferrous metal hardware shall be hot-dip galvanized in accordance with ASTM A 153 and ASTM A 123.

1.3.2.2 Equipment

Equipment and component items, including but not limited to metal poles and ferrous metal luminaires not hot-dip galvanized or porcelain enamel finished, shall be provided with corrosion-resistant finishes which shall withstand 120 hours of exposure to the salt spray test specified in ASTM B 117 without loss of paint or release of adhesion of the paint primer coat to the metal surface in excess of 1.6 mm (1/16 inch) from the test mark. The scribed test mark and test evaluation shall have a rating of not less

than 7 in accordance with TABLE 1, (procedure A) of ASTM D 1654. Cut edges or otherwise damaged surfaces of hot-dip galvanized sheet steel or mill galvanized sheet steel shall be coated with a zinc rich paint conforming to the manufacturer's standard.

1.3.3 Finishing

Painting required for surfaces not otherwise specified and finish painting of items only primed at the factory, shall be as specified in Section 09900 PAINTING, GENERAL.

1.4 SUBMITTALS

Government approval is required for submittals with a "GA" designation; submittals having an "FIO" designation are for information only. The following shall be submitted in accordance with section 01330 SUBMITTAL PROCEDURES:

SD-01 Data

Equipment and Materials; FIO.

Data published by the manufacturer of each item on the list of equipment and material, to permit verification that the item proposed is of the correct size, properly rated or applied, or is otherwise suitable for the application and fully conforms to the requirements specified.

Spare Parts; FIO.

Spare parts data for each item of material and equipment specified, after approval of detail drawings for materials and equipment, and not later than 4 months before the date of beneficial occupancy. The data shall include a complete list of parts, special tools, and supplies, with current unit prices and sources of supply.

SD-04 Drawings

Lighting System; FIO.

Detail drawings for the complete system and for poles, lighting fixtures, bracket arms, handholes, transformers, controllers, and foundations. Detail drawings for precast handholes shall include a design analysis to determine that strength is equivalent to indicated cast-in-place concrete handholes. Drawings shall indicate bonding method for concrete encasement. Drawings shall include design calculations showing adequate strength of screw foundations.

A layout showing light locations, isolux patterns, and lighting ratios.

As-Built Drawings; FIO.

Final as-built drawings shall be finished drawings on mylar or vellum and shall be delivered with the final test report.

SD-09 Reports

Lighting Tests; FIO.

Test procedures and reports for floodlighting. After receipt by the Contractor of written approval of the test procedures, the Contractor shall schedule the tests. The final test procedures report shall be delivered after completion of the tests.

Operating Test; FIO.

Test procedures and reports for the Operating Test. After receipt by the Contractor of written approval of the test procedures, the Contractor shall schedule the tests. The final test procedures report shall be delivered after completion of the tests.

Ground Resistance Measurements; FIO.

The measured resistance to ground of each separate grounding installation, indicating the location of the rods, the resistance of the soil in ohms per millimeter and the soil conditions at the time the measurements were made. The information shall be in writing.

SD-19 Operation and Maintenance Manuals

Lighting System; FIO.

A draft copy of the operation and maintenance manuals, prior to beginning the tests for use during site testing. Final copies of the manuals as specified bound in hardback, loose-leaf binders, within 30 days after completing the field test. The draft copy used during site testing shall be updated with any changes required, prior to final delivery of the manuals. Each manual's contents shall be identified on the cover. The manual shall include names, addresses, and telephone numbers of each subcontractor installing equipment and systems, and nearest service representatives for each item of equipment for each system. The manuals shall have a table of contents and tab sheets. Tab sheets shall be placed at the beginning of each chapter or section and at the beginning of each appendix. The final copies delivered after completion of the field test shall include modifications made during installation checkout and acceptance.

PART 2 PRODUCTS

2.1 STANDARD PRODUCT

Material and equipment shall be the standard product of a manufacturer regularly engaged in the manufacture of the product and shall essentially duplicate items that have been in satisfactory use for at least 2 years prior to bid opening. Items of the same classification shall be identical including equipment, assemblies, parts, and components.

2.2 BRACKET ARMS

2.2.1 On Wood Poles

Poles shall be in accordance with ANSI C136.13 provided with galvanized steel pipe bracket arms coordinated for pole attachment. The bracket arm shall be cantilever with underbrace or double tie brace. The bracket arm shall be of the length indicated on drawings.

2.2.2 Floodlight Brackets

Floodlight brackets shall be coordinated with the floodlight support provided.

2.3 GROUND RODS

See Section 16375 ELECTRICAL DISTRIBUTION SYSTEM, UNDERGROUND.

2.4 POLES

Woodpoles shall be the pole manufacturer's standard design for supporting the number of fixtures indicated. Poles shall be designed for a wind velocity of 44.7 meters per second (100 mph) at the base of the pole, for a wind gust factor of 1.3, and for the height and drag factors recommended by AASHTO LTS-2. The effective projected area of luminaires and other pole-mounted devices shall be taken into account in pole design. Poles shall have grounding provisions. Grounding connection shall be provided near the bottom of each WOOD pole base. Chipped, or broken poles shall not be installed.

2.4.1 Wood Poles

Wood poles shall conform to ANSI O5.1. Poles shall be pressure treated in accordance with AWPA C4 with creosote conforming to AWPA P1/P13and oil-borne preservatives and petroleum conforming to AWPA P8 and AWPA P9. Species listed in ANSI O5.1 for which a preservative treatment is not specified in AWPA C4 shall not be used. Northern white cedar may be used if treated as specified for western red cedar, and western fir may be used if treated as specified for Douglas fir. Pole markings shall be located approximately 3 m from the butt of the pole or as approved. Poles shall be machine trimmed by turning smooth full length and shall be roofed, gained, and bored before pressure treatment.

2.4.2 Anchor Bolts

Anchor bolts shall be the pole manufacturer's standard, but not less than necessary to meet the pole wind and ice loading, herein and other specified design requirements.

2.5 POLE LINE HARDWARE

Zinc coated hardware shall conform to ANSI C135.1 and ANSI C135.14, and steel hardware material shall conform to ASTM A 575 and ASTM A 576. Hardware shall be hot-dip galvanized in accordance with ASTM A 153.

2.6 ELECTRICAL ENCLOSURES

The Contractor shall provide metallic enclosures as needed to house the lighting control equipment. Enclosures shall conform to NEMA ICS 6 and NEMA 250. Enclosures shall be provided with lockable or padlock handles. Keys for lockable enclosures shall be delivered to the Contracting Officer. The enclosures shall be as specified or as shown on the drawings.

2.6.1 Interior Enclosures

Enclosures to house lighting equipment in an interior environment shall meet the requirements of a NEMA 12 enclosure as defined in NEMA 250.

2.6.2 Exposed-to-Weather Enclosures

Enclosures to house lighting equipment in an outdoor environment shall meet the requirements of a NEMA 4 enclosure as defined in NEMA 250.

2.6.3 Corrosion Resistant Enclosures

Enclosures to house lighting equipment in a corrosive environment shall meet the requirements of a NEMA 4X enclosure as defined in NEMA 250.

2.7 ILLUMINATION

2.7.1 General Lighting

Luminaires, ballasts, lamps, and control devices required for general area lighting, including floodlighting shall be in accordance with sheet 59 of Standard Detail No. 40-06-04, however ballast to be located remote from fixture as outlined under Remote Ballast Boxes, and Ballast section of this specfication attached to these specifications.

2.8 LAMPS AND BALLASTS, HIGH INTENSITY DISCHARGE (HID) SOURCES

2.8.1 Metal-Halide

Lamps shall be made by a manufacturer with not less than 5 years experience in making metal-halide lamps. Metal-halide lamps shall conform to ANSI C78.1375 or ANSI C78.1376. Ballasts shall conform to ANSI C82.4 or UL 1029.

2.8.2 Remote Ballast Boxes, and Ballast

Built as integral part of the pole, mounted 3.66 meters above grade. Ballasts shall be factory wired with easy connection to floodlights and factory tested before shipment. All major electrical components except lamps are to included in the electrical enclosure. The lower part of the enclosure will house the disconnect breaker for the floodlight on the structure. Wire schematics shall be mounted on the inside of the enclosure. All circuits shall be labeled with fixture reference. Access hub between the remote ballast enclosure and the steel pole shall be water-tight. The enclosure shall be U.L. heat tested for outdoor environment, NEMA type 4 gasketed, hot-dip galvanized after fabrication ASTM 123-89a standards, full length stainless steel hinge, fasteners, and latches. Ballast shall be U.L. listed, high power factor, constant wattage, auto-transformer. Lamp start to -20 degrees F, with input of 480 volts.
Text

2.9 LIGHTING CONTROL EQUIPMENT

2.9.1 Photo-Control Devices

Photo-control devices shall conform to ANSI C136.10. Each photo-control element shall be a replaceable, weatherproof, plug-in or twist-lock assembly adjustable operation range of approximately 5.4 to 53.8 lux.

2.9.2 Manual Control Switches

Manual control switches shall conform to UL 98. The switches shall be the heavy-duty type and shall be suitable for operation on a 120 volt, 60 Hz system. The number of poles and ampere rating shall be as indicated. Switch construction shall be such that a screwdriver will be required to open the switch door when the switch is on. The selector switch shall have

a minimum of three positions: ON, OFF, and AUTOMATIC. The automatic selection shall be used when photoelectric or timer control is desired. The selector switch shall interface with the lighting system magnetic contactor and control its activity.

2.9.3 Safety Switches

Switches shall be the heavy-duty type with NEMA ICS 6 Type 4 enclosures and shall be suitable for operation on a 480Y/277 volt, 60 Hz, three-phase system. Switch construction shall be such that a screwdriver will be required to open the switch door when the switch is on. Blades shall be visible with door open and shall be of the quick-make, quick-break type. Terminal lugs shall be coordinated with the wire size. Switches shall conform to UL 98.

2.9.4 Magnetic Contactor

Magnetic contactors shall be mechanically held, electrically operated, and shall conform to NEMA ICS 1 and NEMA ICS 2. The contactor shall be suitable for 480 volts, three phase, 60 Hz. Coil voltage shall be as indicated. Maximum continuous ampere rating and number of poles shall be as indicated on drawings. Enclosures for contactors mounted indoors shall be NEMA ICS 6, Type 1. Each contactor shall be provided with a spare, normally open auxiliary contact. Terminal lugs shall be coordinated with the wire size.

2.10 PHOTOMETRIC DISTRIBUTION CLASSIFICATION

Photometrics shall conform to IESNA ARP-8.

2.11 FIXTURES

HID lighting fixtures shall conform to UL 1572. Standard fixtures shall be as detailed on Standard Detail No. 40-06-04, Sheet Nos. 59 which accompany and form a part of this specification. Special fixtures shall be as indicated on the drawings. Illustrations shown on these sheets or on the drawings are indicative of the general type desired and are not intended to restrict selection to fixtures of any particular manufacturer. Fixtures of similar design, equivalent light distribution and brightness characteristics, equal finish and quality will be acceptable as approved.

2.11.1 Accessories

Accessories such as straps, mounting plates, nipples, or brackets shall be provided for proper installation.

2.11.2 In-Line Fuse

An in-line fuse shall be provided for each fixture, and shall consist of a fuse and a UL approved waterproof fuse holder rated at 30 amperes, 600 volts, with insulated boots. Fuse rating shall be as indicated.

PART 3 EXECUTION

3.1 GENERAL

The Contractor shall install all system components and appurtenances in accordance with the manufacturer's instructions, ANSI C2, and contract documents, and shall furnish necessary hardware, fixtures, cables, wire,

connectors, interconnections, services, and adjustments required for a complete and operable system.

3.2 ENCLOSURE PENETRATIONS

Enclosure penetrations shall be from the bottom unless the system design requires penetrations from other directions. Penetrations of interior enclosures involving transitions of conduit from interior to exterior, and penetrations on exterior enclosures shall be sealed with rubber silicone sealant to preclude the entry of water. The conduit riser shall terminate in a hot-dipped galvanized metal cable terminator. The terminator shall be filled with an approved sealant as recommended by the cable manufacturer, and in such a manner that the cable is not damaged.

3.3 PREVENTION OF CORROSION

3.3.1 Aluminum

Aluminum shall not be used in contact with earth or concrete, and where connected to dissimilar metal, shall be protected by approved fittings and treatment.

3.3.2 Steel Conduits

Steel conduits shall not be installed within concrete slabs-on-grade. Steel conduits installed underground or under slabs-on-grade, or penetrating slabs-on-grade, shall be field wrapped with 254 micrometers (0.010 inch) thick pipe-wrapping plastic tape applied with a 50 percent overlap, or shall have a factory-applied plastic resin, epoxy coating. Zinc coating may be omitted from steel conduit which has a factory-applied epoxy coating.

3.3.3 Cold Galvanizing

Field welds and/or brazing on factory galvanized boxes, enclosures, conduits, etc. shall be coated with a cold galvanized paint containing at least 95 percent zinc by weight.

3.4 POLE INSTALLATION

Pole lengths shall provide a luminaire mounting height of 18.2 m (60 feet). Luminaire mounting height may be increased by the height of the transformer base where required. Electrical cabling shall be provided to the light pole as specified in Section 16375. The mount interfaces shall have ac power connected, and the pole wiring harness shall be connected to the luminaire. Pole installation shall conform to the manufacturer's recommendations, NFPA 70, and ANSI C2. Poles shall be set straight and plumb.

3.4.1 Pole Brackets

Brackets shall be installed as specified by the manufacturer and as shown on drawings. Mounting hardware shall be sized appropriately to secure the mount, luminaire, and housing with wind and ice loading normally encountered at the site. Pole brackets for floodlights shall have the number of tenons indicated, arranged to provide the indicated spread between each tenon. Where indicated on drawings, adjustable heads shall be installed on the brackets to position the luminaires. Identical brackets shall be used with one type of luminaire.

3.4.2 Concrete Foundations

Concrete foundations shall have anchor bolts accurately set in the foundation using a template supplied by the pole manufacturer. Once the concrete has cured, the pole shall be set on the foundation, leveled on the foundation bolts, and secured with the holding nuts. The space between the foundation and the pole base shall be grouted. Concrete and grout work shall conform to Section 03300 CONCRETE FOR BUILDING CONSTRUCTION. Concrete shall be 21 MPa (3000 psi) at 28 days.

3.4.3 Rigid Steel Conduit Ells

Rigid steel conduit ells shall be provided for all wood poles, where required. Rigid steel conduit shall be connected to the ells and shall extend to a minimum height of 3 m above grade. Conduit ells shall be provided at all poles.

3.4.4 Wood Pole Installation

Wood poles shall be set straight and firm. In normal firm ground, minimum pole-setting depths shall be as listed in Table II. In rocky or swampy ground, pole-setting depths shall be decreased or increased [as shown] respectively in accordance with the local utility's published standards and as approved. In swampy or soft ground, a bog shoe shall be used where support for a pole is required. Poles in straight runs shall be in a straight line. Curved poles shall be placed with curvatures in the direction of the pole line. Poles shall be set to maintain as even a grade as practicable. When the average ground run is level, consecutive poles shall not vary more than 1.5 m in height. When the ground is uneven, poles differing in length shall be kept to minimum by locating poles to avoid the highest and lowest ground points. If it becomes necessary to shorten a pole, a piece shall be sawed off the top end and roofed. If any pole is shortened after treatment, the shortened end of the pole shall be given an application of hot preservative. Where poles are set on hilly terrain, along edges of cuts or embankments, or where soil may be washed out, special precautions shall be taken to ensure durable pole foundations, and the setting depth shall be measured from the lower side of the pole. Holes shall be dug large enough to permit proper use of tampers to the full depth of a hole. Earth shall be placed into a hole in 15 cm maximum layers, then thoroughly tamped before the next layer is placed. Surplus earth shall be placed around a pole in a cone and packed tightly to drain water from poles.

TABLE I - MINIMUM POLE-SETTING DEPTH

(Meters)

Length Overall Meters	Straight Lines	Curves, Corners, and Points of Extra Strain
6.1	1.5	1.5
7.6	1.7	1.7
9.2	1.7	1.7

TABLE I - MINIMUM POLE-SETTING DEPTH

(Meters)

Length Overall Meters	Straight Lines	Curves, Corners, and Points of Extra Strain
10.7	1.8	1.8
12.2	1.8	2.0
13.7	2.0	2.1
15.2	2.1	2.3
16.7	2.3	2.5
18.3	2.5	2.6

3.5 LIGHTING

3.5.1 Lamps

Lamps of the proper type, wattage, and voltage rating shall be delivered to the project in the original containers and installed in the fixtures just before completion of the project.

3.5.2 Fixture Installation

Fixtures shall be installed per manufacturer's instructions.

3.5.3 Lighting Performance

Lighting Level

The initial horizontal lighting intensity level shall average 215 lux over each area. A 0.8 maintenance factor plus appropriate tilt shall be used in determining the maintained averages. The maintained averages shall be no less than 200 lux. 140,000 lumens are to be used in determining the above averages.

3.5.3.1 Uniformity

The maximum/minimum ratio shall not exceed 3:1.

3.5.3.2 Field Measurements

Actual lighting intensity measurements as well as computer generated values shall be measured and computed based on a grid size of 6.1 meters by 6.1 meters with same number of target points.

3.5.3.3 Vertical Illumination

In accordance with reference RP-6-88 IES.

3.5.3.4 Spill Light

The maximum amount of trespass light allowed shall be 1/10 initial lux as

measured in the horizontal plane at 305 meters. A horizontal isolux layout of the each area shall be provided showing the maximum allowable isolux contour line and trespass boundary line as described above. Spill light shall be restricted and shall be a major concern in the manufacturer's design.

3.5.3.5 Glare

The reduction or elimination of objectionable glare shall be a major concern of the manufacturer's design. Fixtures shall use glare shields with louvers to reduce this glare. This may require additional fixtures to maintain uniformity and lighting levels for some manufacturers.

3.5.3.6 Submittals

Manufacturing shall provide a computer derived lighting layout showing point by point lighting intensity levels of at the surface, maximum to minimum ratio, average tilt factor, and total energy consumption in kilowatts required for proposed layout. Manufacturer shall guarantee that equipment conforms to the proposed layout and energy consumptions.

3.6 LIGHTING CONTROL SYSTEM

3.6.1 Photo-Control

Lighting luminaires shall be controlled in banks by a single photo-control element mounted within each bank.

3.6.2 Time Control Switches

Switches shall be installed with not less than four 6.4 mm (1/4 inch) bolts. The use of sheet metal screws will not be allowed.

3.6.3 Manual and Safety Switches

Terminal lugs shall be coordinated with the wire size. Switches shall be securely fastened to the supporting structure or wall using not less than four 6.4 mm (1/4 inch) bolts. The use of sheet metal screws will not be allowed.

3.6.4 Magnetic Contactors

Terminal lugs shall be coordinated with the wire size. Switches shall be securely fastened to the supporting structure or wall using not less than four 6.4 mm (1/4 inch) bolts. The use of sheet metal screws will not be allowed.

3.7 GROUNDING

Grounding shall be in conformance with Section 16375.

3.7.1 Lighting Pole

One ground rod shall be provided at each pole. Bases of metal or concrete lighting poles shall be connected to ground rods by means of No. 8 AWG bare copper wire. Lighting fixture brackets on wood and concrete poles shall be grounded to a No. 6 AWG bare copper grounding conductor connected to the ground rod.

3.7.2 Pullbox

In each pullbox, at a convenient point close to the wall, a ground rod shall be driven into the earth, and approximately 100 mm of the ground rod shall extend above the floor. When precast concrete units are used, the top of the ground rod may be below the floor, and a No. 1/0 AWG copper ground conductor shall be brought inside through a watertight sleeve in the wall. Connection to ground rods shall be by means of bolted-clamp terminals or by an approved fusion-welding process. Ground wires shall be neatly and firmly attached to pullbox walls, and the amount of exposed bare wire shall be held to a minimum.

3.8 TESTS

3.8.1 Testing For Lighting

The Contractor shall perform site testing and adjustment of the completed lighting. The Contractor shall provide personnel, equipment, instrumentation, and supplies necessary to perform testing. Written notification of planned testing shall be given to the Government at least 14 days prior to the test; notice shall not be given until after the Contractor has received written approval of the specific test procedures. Test procedures shall explain, in detail, step-by-step actions and expected results demonstrating compliance with the requirements of the specification. Test reports shall be used to document results of the tests. Reports shall be delivered to the Government within 7 days after completion of each test.

3.8.2 Operating Test

After the installation is completed and at such time as the Contracting Officer may direct, the Contractor shall conduct an operating test for approval. The equipment shall be demonstrated to operate in accordance with the requirements specified. The test shall be performed in the presence of the Contracting Officer. The Contractor shall furnish instruments and personnel required for the test, and the Government will furnish the necessary electric power.

-- End of Section --

SECTION TABLE OF CONTENTS

DIVISION 16 - ELECTRICAL

SECTION 16670

LIGHTNING PROTECTION SYSTEM

PART 1 GENERAL

1.1 REFERENCES
1.2 GENERAL REQUIREMENTS
1.2.1 Verification of Dimensions
1.2.2 System Requirements
1.2.3 Year 2000 Compliant Equipment
1.3 SUBMITTALS

PART 2 PRODUCTS

2.1 MATERIALS
2.1.1 General Requirements
2.1.2 Main and Secondary Conductors
2.1.2.1 Copper
2.1.3 Air Terminals
2.1.4 Ground Rods
2.1.5 Clamp-Type Connectors
2.1.6 Lightning Protection Components

PART 3 EXECUTION

3.1 INTEGRAL SYSTEM
3.1.1 General Requirements
3.1.1.1 Air Terminals
3.1.1.2 Down Conductors
3.1.1.3 Interconnection of Metallic Parts
3.1.1.4 Ground Connections
3.1.1.5 Grounding Electrodes
3.2 RAILROADS
3.3 SEPARATELY MOUNTED SHIELDING SYSTEM, OVERHEAD GROUND-WIRE TYPE
3.4 INSPECTION

-- End of Section Table of Contents --

SECTION 16670

LIGHTNING PROTECTION SYSTEM

PART 1 GENERAL

1.1 REFERENCES

The publications listed below form a part of this specification to the extent referenced. The publications are referred to in the text by basic designation only.

NATIONAL FIRE PROTECTION ASSOCIATION (NFPA)

NFPA 70	(1996) National Electrical Code
NFPA 780	(1995) Lightning Protection Code

UNDERWRITERS LABORATORIES (UL)

UL-03	(1992) Electrical Construction Materials Directory
UL 96	(1985; Rev thru Dec 1988) Lightning Protection Components
UL 96A	(1982; Rev thru Jul 1990) Installation Requirements for Lightning Protection Systems
UL 467	(1984; Rev thru Nov 1986) Grounding and Bonding Equipment
UL 486A	(1991; R Oct 91) Wire Connectors and Soldering Lugs for Use with Copper Conductors

1.2 GENERAL REQUIREMENTS

1.2.1 Verification of Dimensions

The Contractor shall become familiar with all details of the work, verify all dimensions in the field, and shall advise the Contracting Officer of any discrepancy before performing the work. No departures shall be made without the prior approval of the Contracting Officer.

1.2.2 System Requirements

The system furnished under this specification shall consist of the standard products of a manufacturer regularly engaged in the production of lightning protection systems and shall be the manufacturer's latest UL approved design. The lightning protection system shall conform to NFPA 70 and NFPA 780, UL 96 and UL 96A, except where requirements in excess thereof are specified herein.

1.2.3 Year 2000 Compliant Equipment

Where applicable, all equipment specified shall be Year 2000 compliant and shall be able to accurately process date/time data (including, but not limited to, calculating, comparing, and sequencing) from, into, and between the twentieth and twenty-first centuries, including leap year calculations, when used in accordance with the product documentation provided by the contractor, provided that all products (e.g. hardware, software, firmware) used in combination with other information technology, shall accurately process date/time data if the other information technology properly exchanges date/time data with it.

1.3 SUBMITTALS

Government approval is required for submittals with a "GA" designation; submittals having an "FIO" designation are for information only. The following shall be submitted in accordance with Section 01330 SUBMITTAL PROCEDURES:

SD-04 Drawings

Lightning Protection System; FIO.

Detail drawings consisting of a complete list of material, including manufacturer's descriptive and technical literature, catalog cuts, drawings, and installation instructions. Detail drawings shall demonstrate that the system has been coordinated and will function as a unit. Drawings shall show proposed layout and mounting and relationship to other parts of the work.

SD-13 Certificates

Materials and Equipment; FIO.

Where material or equipment is specified to comply with requirements of UL, proof of such compliance. The label of or listing in UL-03 will be acceptable evidence. In lieu of the label or listing, a written certificate from an approved nationally recognized testing organization equipped to perform such services, stating that the items have been tested and conform to the requirements and testing methods of Underwriters Laboratories may be submitted. A letter of findings shall be submitted certifying UL inspection of lightning protection systems provided on the facilities indicated on the drawings.

PART 2 PRODUCTS

2.1 MATERIALS

2.1.1 General Requirements

No combination of materials shall be used that form an electrolytic couple of such nature that corrosion is accelerated in the presence of moisture unless moisture is permanently excluded from the junction of such metals. Where unusual conditions exist which would cause corrosion of conductors, conductors with protective coatings or oversize conductors shall be used. Where a mechanical hazard is involved, the conductor size shall be increased to compensate for the hazard or the conductors shall be protected by covering them with molding or tubing made of wood or nonmagnetic material. When metallic conduit or tubing is used, the conductor shall be

electrically connected at the upper and lower ends.

2.1.2 Main and Secondary Conductors

Conductors shall be in accordance with NFPA 780 and UL 96 for Class I, Class II, or Class II modified materials as applicable.

2.1.2.1 Copper

Copper conductors used on nonmetallic stacks shall weigh not less than 170 kg per 300 m (375 pounds per thousand feet), and the size of any wire in the cable shall be not less than No. 15 AWG. The thickness of any web or ribbon used on stacks shall be not less than No. 12 AWG. Counterpoise shall be copper conductors not smaller than No. 1/0 AWG.

2.1.3 Air Terminals

Terminals shall be in accordance with UL 96 and NFPA 780. Air terminals more than 600 mm in length shall be supported by a suitable brace, with guides, not less than one-half the height of the terminal.

2.1.4 Ground Rods

Rods made of copper-clad steel shall conform to UL 467. Ground rods shall be not less than 19.1 mm (3/4 inch) in diameter and 3.048 m (10 feet) in length. Ground rods of copper-clad steel, stainless steel, galvanized ferrous, and solid copper shall not be mixed on the job.

2.1.5 Clamp-Type Connectors

Connectors for splicing conductors shall conform to UL 96, class as applicable, and UL 486A, Class 2, style and size as required for the installation.

2.1.6 Lightning Protection Components

Lightning protection components, such as bonding plates, air terminal supports, clips, and fasteners shall conform to UL 96, classes as applicable.

PART 3 EXECUTION

3.1 INTEGRAL SYSTEM

3.1.1 General Requirements

The lightning protection system shall consist of overhead ground wire, air terminals, down conductors, ground connections, and grounds, electrically interconnected to form the shortest distance to ground. All conductors on the structures shall be exposed except where conductors are in protective sleeves exposed on the outside walls. Interconnections made within side-flash distances shall be at or above the level of the grounded metallic parts.

3.1.1.1 Air Terminals

Air terminal design and support shall be in accordance with NFPA 780. Air terminals shall be secured against overturning either by attachment to the object to be protected or by means of a substantial tripod or other braces

permanently and rigidly attached to the structure.

3.1.1.2 Down Conductors

Down conductors shall be electrically continuous from air terminals to grounding electrodes. Down conductors shall be protected where necessary, to prevent mechanical injury to the conductor.

3.1.1.3 Interconnection of Metallic Parts

Conductors placed where there is probability of unusual wear, mechanical injury, or corrosion shall be of greater electrical capacity than would normally be used, or shall be protected.

3.1.1.4 Ground Connections

Ground connections comprising continuations of down conductors from the structure to the grounding electrode shall securely connect the down conductor and ground in a manner to ensure electrical continuity between the two. All connections shall be of the clamp type. There shall be a ground connection for each down conductor. Metal water pipes and other large underground metallic objects shall be bonded together with all grounding mediums. Ground connections shall be protected from mechanical injury. In making ground connections, advantage shall be taken of all permanently moist places where practicable, although such places shall be avoided if the area is wet with waste water that contains chemical substances, especially those corrosive to metal.

3.1.1.5 Grounding Electrodes

A grounding electrode shall be provided for each down conductor located as shown. A driven ground shall extend into the earth for a distance of not less than 3.0 meters. Ground rods shall be set not less than 900 mm, nor more than 2.5 m, from the structures foundation. The complete installation shall have a total resistance to ground of not more than 10 ohms . Ground rods shall be tested individually prior to connection to the system and the system as a whole shall be tested not less than 24 hours after rainfall. When the resistance of the complete installation exceeds the specified value or two ground rods individually exceed 10 ohms, the Contracting Officer will be notified immediately. Where so indicated on the drawings, an alternate method for grounding electrodes in shallow soil shall be provided by digging trenches radially from the pole. The lower ends of the down conductors or their equivalent in the form of metal strips or wires are then buried in the trenches.

3.2 RAILROADS

Rails that are not electrically continuous and rail switches shall be bonded together by means of flexible copper cable or straps for a distance of at least 30 m on each side of structures in which explosives, ammunition, or explosive ingredients are stored, handled, manufactured, or processed. These rails shall also be grounded. Rails shall be grounded at points 45 m on each side of overhead line crossings in excess of 600 volts and rails shall be bonded between grounds. At points where the tracks come within 7.5 m of structures provided with a grounding system, such grounds shall be interconnected to the nearest rail. The cable used for the interconnection shall be at least 9.5 mm diameter or the same size as the conductors used on the structure. Isolation joints shall be installed in metal rails outside of hazardous areas to avoid stray currents being

conducted into the bonded or grounded area.

3.3 SEPARATELY MOUNTED SHIELDING SYSTEM, OVERHEAD GROUND-WIRE TYPE

This type of protection shall consist of two or more poles electrically connected to each other by overhead conductors. Where the poles are made of a nonconducting material an air terminal shall be mounted to the top of each pole and shall extend not less than 600 mm nor more than 1.5 m above the top of the pole. Down conductors shall be run down the side of the pole, or a guy wire may be used as a conductor. When the guy wire is used, the guy wire and the overhead ground wire shall be dead-ended at the pole. The overhead ground wire and the guy wire shall then be connected to each other by a separate cable using standard cable clamps in such manner that the discharge will not be reversed at any point. Guy wires used as down conductors shall be grounded by means of separate ground rods with cable connections clamped to the lower end of guy wire. Resistance to ground shall not exceed 10 ohms. Where metal poles are used, air terminals are not required and if resistance of the poles to ground is 10 ohms or less, additional grounding is unnecessary. Where the resistance to ground exceeds 10 ohms, additional grounding shall be provided and the ground connection shall be fastened to the metal pole and the ground. The height of the poles shall be sufficient to provide a clearance of not less than 1.8 m between the overhead ground wire and the highest projection of the building. When the ground cable runs across and is used to protect stacks or vents that emit explosive dusts, vapors, or gases under forced draft, the cable shall have at least 4.5 m clearance above the stack or vent. When grounding is required, a ground rod shall be driven approximately 1.8 m from the base of each pole. When the combined measured resistance to ground of the pole and ground rod exceeds 10 ohms, the Contracting Officer will be notified immediately.

3.4 INSPECTION

The lightning protection system will be inspected by the Contracting Officer to determine conformance with the requirements of this specification. No part of the system shall be concealed until so authorized by the Contracting Officer. A certified test shall be performed with test results and certificate submitted to the Contracting Officer.

-- End of Section --

SECTION TABLE OF CONTENTS

DIVISION 16 - ELECTRICAL

SECTION 16710

PREMISES DISTRIBUTION SYSTEM

PART 1 GENERAL

1.1 REFERENCES
1.2 SYSTEM DESCRIPTION
1.3 ENVIRONMENTAL REQUIREMENTS
1.3.1 Year 2000 Compliant Equipment
1.4 QUALIFICATIONS
1.4.1 Minimum Contractor Qualifications
1.4.2 Minimum Manufacturer Qualifications
1.5 SUBMITTALS
1.6 DELIVERY AND STORAGE
1.7 OPERATION AND MAINTENANCE MANUALS
1.8 RECORD KEEPING AND DOCUMENTATION
1.8.1 Cables
1.8.2 Termination Hardware

PART 2 PRODUCTS

2.1 MATERIALS AND EQUIPMENT
2.2 UNSHIELDED TWISTED PAIR CABLE SYSTEM
2.2.1 Cable Insulation
2.2.2 Telephone Cables, Inside Wiring (IW)
2.2.3 Horizontal Cable
2.2.4 Connecting Hardware
2.2.4.1 Telecommunications Outlets
2.2.4.2 Terminal Blocks
2.3 Protectors
2.4 EQUIPMENT MOUNTING BACKBOARD
2.5 TELECOMMUNICATIONS OUTLET BOXES

PART 3 EXECUTION

3.1 INSTALLATION
3.1.1 Horizontal Distribution Cable
3.1.2 Telecommunications Outlets
3.1.2.1 Faceplates
3.1.2.2 Cables
3.1.2.3 Pull Cords
3.1.3 Terminal Blocks
3.1.4 Communications Raceways
3.1.5 Conduit Below Slab-on-Grade or in the Ground
3.1.5.1 Duct and Fittings, Nonmetallic Type for Installation Underground
3.1.5.2 Plastic
3.1.6 Duct Lines
3.1.6.1 Requirements

3.1.6.2 Treatment
3.1.6.3 Installation of the Couplings
3.1.6.4 Plastic Duct
3.1.6.5 Duct Sealant
3.1.7 Building Entry
3.1.8 Cable
3.1.8.1 Gauranteed Pairs
3.1.8.2 Station Cables
3.1.8.3 Splicing
3.1.8.4 Cable Installation
3.2 TERMINATION
3.2.1 General
3.2.2 Building Entry Protection Terminals
3.2.3 Terminal Blocks
3.2.4 Telephone/data Outlets
3.2.5 Telephone Terminal Backboard
3.3 GROUNDING
3.3.1 Terminals
3.4 ADDITIONAL MATERIALS
3.5 ADMINISTRATION AND LABELING
3.5.1 Labeling
3.5.1.1 Labels
3.5.1.2 Cable
3.5.1.3 Termination Hardware
3.6 TESTING
3.6.1 Unshielded Twisted Pair Tests
3.6.2 Category 5 Circuits

-- End of Section Table of Contents --

SECTION 16710

PREMISES DISTRIBUTION SYSTEM

PART 1 GENERAL

1.1 REFERENCES

The publications listed below form a part of this specification to the extent referenced. The publications are referred to in the text by basic designation only.

ELECTRONIC INDUSTRIES ASSOCIATION (EIA)

EIA ANSI/TIA/EIA-568-A	(1995) Commercial Building Telecommunications Cabling Standard
EIA ANSI/TIA/EIA-569	(1990) Commercial Building Standard for Telecommunications Pathways and Spaces
EIA ANSI/TIA/EIA-606	(1993) Administration Standard for the Telecommunications Infrastructure of Commercial Buildings
EIA ANSI/TIA/EIA-607	(1994) Commercial building Grounding and Bonding Requirements for Telecommunications
EIA TSB 67	(1995) Transmission Performance Specifications for Field Testing of Unshielded Twisted Pair Cabling Systems

NATIONAL FIRE PROTECTION ASSOCIATION (NFPA)

NFPA 70	(1996) National Electrical Code

1.2 SYSTEM DESCRIPTION

The premises distribution system shall consist of inside-plant horizontal cables and connecting hardware to transport telephone and data (including LAN) signals between equipment items in a building.

1.3 ENVIRONMENTAL REQUIREMENTS

Connecting hardware shall be rated for operation under ambient conditions of 0 to 60 degrees C and in the range of 0 to 95 percent relative humidity, noncondensing.

1.3.1 Year 2000 Compliant Equipment

Where applicable, all equipment specified shall be Year 2000 compliant and shall be able to accurately process date/time data (including, but not limited to, calculating, comparing, and sequencing) from, into, and between the twentieth and twenty-first centuries, including leap year calculations, when used in accordance with the product documentation provided by the contractor, provided that all products (e.g. hardware, software, firmware) used in combination with other information technology, shall accurately

process date/time data if the other information technology properly exchanges date/time data with it.

1.4 QUALIFICATIONS

1.4.1 Minimum Contractor Qualifications

All work under this section shall be performed by and all equipment shall be furnished and installed by a certified Telecommunications Contractor, hereafter referred to as the Contractor. With the exception of furnishing and installing conduit, electrical boxes, and pullwires, this work shall not be done by the Electrical Contractor. The Contractor shall have the following qualifications in Telecommunications Systems installation:

a. Contractor shall have a minimum of 3 years experience in the application, installation and testing of the specified systems and equipment.

b. All supervisors and installers assigned to the installation of this system or any of its components shall have factory certification from each equipment manufacturer that they are qualified to install and test the provided products. General electrical trade staff (electricians) shall not be used for the installation of the premises distribution system cables and associated hardware.

c. All installers assigned to the installation of this system or any of its components shall have a minimum of 3 years experience in the installation of the specified copper and fiber optic cable and components.

1.4.2 Minimum Manufacturer Qualifications

The equipment and hardware provided under this contract will be from manufacturers that have a minimum of 3 years experience in producing the types of systems and equipment specified.

1.5 SUBMITTALS

Government approval is required for submittals with a "GA" designation; submittals having an "FIO" designation are for information only. The following shall be submitted in accordance with Section 01330 SUBMITTAL PROCEDURES:

SD-01 Data

Spare Parts; FIO.

Lists of spare parts, tools, and test equipment for each different item of material and equipment specified, after approval of detail drawings, not later than 2 months prior to the date of beneficial occupancy. The data shall include a complete list of parts and supplies, with current unit prices and source of supply, and a list of spare parts recommended for stocking.

SD-04 Drawings

Premises Distribution System; FIO.

Detail drawings including a complete list of equipment and material. Detail drawings shall contain complete wiring and schematic diagrams and other details required to demonstrate that the system has been coordinated and will function properly as a system. Drawings shall include vertical riser diagrams, equipment rack details, elevation drawings of telecommunications closet walls, outlet face plate details for all outlet configurations, sizes and types of all cables, conduits, and cable trays. Drawings shall show proposed layout and anchorage of equipment and appurtenances, and equipment relationship to other parts of the work including clearance for maintenance and operation.

Record Drawings; FIO.

Record drawings for the installed wiring system infrastructure per EIA ANSI/TIA/EIA-606. The drawings shall show the location of all cable terminations and location and routing of all backbone and horizontal cables. The identifier for each termination and cable shall appear on the drawings.

SD-06 Instructions

Manufacturer's Recommendations; FIO.

Where installation procedures, or any part thereof, are required to be in accordance with the recommendations of the manufacturer of the material being installed, printed copies of these recommendations, prior to installation shall be provided. Installation of the item will not be allowed to proceed until the recommendations are received and approved.

SD-08 Statements

Test Plan; FIO.

Test plan defining the tests required to ensure that the system meets technical, operational and performance specifications, 60 days prior to the proposed test date. The test plan must be approved before the start of any testing. The test plan shall identify the capabilities and functions to be tested, and include detailed instructions for the setup and execution of each test and procedures for evaluation and documentation of the results.

Qualifications; FIO.

The qualifications of the Manufacturer, Contractor, and the Installer to perform the work specified herein. This shall include proof of the minimum qualifications specified herein.

SD-09 Reports

Test Reports; FIO.

Test reports in booklet form with witness signatures verifying execution of tests. Test results will also be provided on 89 mm diskettes in ASCII format. Reports shall show the field tests performed to verify compliance with the specified performance criteria. Test reports shall include record of the physical parameters verified during testing. Test reports shall be submitted within 14 days after completion of testing.

SD-13 Certificates

Premises Distribution System; FIO.

Written certification that the premises distribution system complies with the EIA ANSI/TIA/EIA-568-A, EIA ANSI/TIA/EIA-569, and EIA ANSI/TIA/EIA-606 standards.

Materials and Equipment; FIO.

Where materials or equipment are specified to conform, be constructed or tested to meet specific requirements, certification that the items provided conform to such requirements. Certification by a nationally recognized testing laboratory that a representative sample has been tested to meet the requirements, or a published catalog specification statement to the effect that the item meets the referenced standard, will be acceptable as evidence that the item conforms. Compliance with these requirements does not relieve the Contractor from compliance with other requirements of the specifications.

Installers; FIO.

The Contractor shall submit certification that all the installers are factory certified to install and test the provided products.

SD-18 Records

Record Keeping and Documentation; FIO.

Documentation on cables and termination hardware in accordance with EIA ANSI/TIA/EIA-606.

1.6 DELIVERY AND STORAGE

Equipment delivered and placed in storage shall be stored with protection from the weather, humidity and temperature variation, dirt and dust or other contaminants.

1.7 OPERATION AND MAINTENANCE MANUALS

Commercial off the shelf manuals shall be furnished for operation, installation, configuration, and maintenance for all products provided as a part of the premises distribution system. Specification sheets for all cable, connectors, and other equipment shall be provided.

1.8 RECORD KEEPING AND DOCUMENTATION

1.8.1 Cables

A record of all installed cable shall be provided in hard copy format AND on electronic media using Windows based computer cable management software per EIA ANSI/TIA/EIA-606. A licensed copy of the cable management software including documentation, shall be provided. The cable records shall include the required data fields for each cable and complete end-to-end circuit report for each complete circuit from the assigned outlet to the entry facility per EIA ANSI/TIA/EIA-606.

1.8.2 Termination Hardware

A record of all installed patch panels and outlets shall be provided in hard copy format AND on electronic media using Windows based computer cable

management software per EIA ANSI/TIA/EIA-606. A licensed copy of the cable management software including documentation, shall be provided. The hardware records shall include only the required data fields per EIA ANSI/TIA/EIA-606.

PART 2 PRODUCTS

2.1 MATERIALS AND EQUIPMENT

Materials and equipment shall be the standard products of a manufacturer regularly engaged in the manufacture of the products and shall be the manufacturer's latest standard design that has been in satisfactory use for at least 1 year prior to installation. Materials and equipment shall conform to the respective publications and other requirements specified below and to the applicable requirements of NFPA 70.

2.2 UNSHIELDED TWISTED PAIR CABLE SYSTEM

2.2.1 Cable Insulation

For each individual Category 5 cable, the insulation, material used on each pair shall be exactly the same in all physical, electrical, and chemical respects. The use of Teflon insulated, plenum rated Category 5 cable is acceptable for both plenum and non-plenum applications. If Teflon insulated plenum rated cable is used by the Contractor, it shall be Type 4x0, where all four pairs are Teflon insulated. Type 3x1 and 2x2 are not acceptable.

2.2.2 Telephone Cables, Inside Wiring (IW)

Each telephone outlet will be serviced with 24-gauge soild copper station-type color coded cable, CMP rated, unshielded twisted pairs, catagory 5 horizonal cable. Cable shall be continuous from each telephone outlet to backboard indicated on the drawings. Splicing of individual cables shall not be permitted. At each outlet, four pair cable shall be terminated on the modular jack assembly, color coded. At the backboard, terminate the cable on the cross-connect terminal blocks and mark with the appropriate outlet number.

2.2.3 Horizontal Cable

Horizontal cable shall meet the requirements of EIA ANSI/TIA/EIA-568-A for Category 5 horizontal cable. Cable shall be label-verified. Cable jacket shall be factory marked at regular intervals indicating verifying organization and performance level. Conductors shall be solid untinned copper 24 AWG. Cable shall be rated CMP per NFPA 70.

2.2.4 Connecting Hardware

Connecting and cross-connecting hardware shall be the same category as the cable it serves. Hardware shall be in accordance with and EIA ANSI/TIA/EIA-568-A.

2.2.4.1 Telecommunications Outlets

Wall and desk outlet plates shall come equipped with two 8-pin modular jack, CFR 47, part 68, plactic shall be class VO in accordance with UL 94, assemblies (type M100 BH-246 "Voice" jack and type M100 CH-246 "Data" jack), mounted on a duplex 2 hole outlet face plate (type M12A-246) with the top

or left jack labeled "voice" and the bottom or right jack labeled "data" or one 4-pin modular jack, CFR 47, part 68, plactic shall be class VO in accordance with UL 94, assembly (type 630B modular wall jack) mounted in a simplex housing as indicated on the drawings.. Modular jacks shall be the same category as the cable they terminate and shall meet the requirements of EIA ANSI/TIA/EIA-568-A. Modular jack pin/pair configuration shall be T568A per EIA ANSI/TIA/EIA-568-A. Modular jacks shall be keyed. One-piece type device plates shall be provided for all outlets and fittings. Faceplates on unfinished walls and on fittings shall be of zinc-coatedsheet steel, cast-metal, or impact resistant plastic having rounded or beveled edges. Screws shall be of metal with countersunk heads, in a color to match finish of the plate. plates shall be installed with all four edges in continuous contact with the finished wall surface without the use of mats or similar devices. Plaster fillings will not be permitted. Plates shall be installed with and aligment tolerance of 16 mm (1/16 inch). the use of sectional-type device plates will not be permitted. Bodies shall be brown or ivory to match color of switch handles and outlets devices in the same room or to harmonize with the color of the respective wall. . Mounting plates shall be provided for system furniture and shall match the system furniture in color. Outlet assemblies used in the premises distribution system shall consist of modular jacks assembled into both simplex and duplex outlet assemblies in single or double gang covers as specified in this section and as indicated on the drawings. The modular jacks shall conform to the requirements of EIA ANSI/TIA/EIA-568-A, Category 5.

2.2.4.2 Terminal Blocks

Terminal blocks shall be wall mounted wire termination units consisting of insulation displacement connectors mounted in plastic blocks, frames or housings. Blocks shall be type 66B3which meet the requirements of EIA ANSI/TIA/EIA-568-A for category 5. Blocks shall be mounted on standoffs (89B mounting brackets) and shall include cable management hardware. Insulation displacement connectors shall terminate 22 or 24 gauge solid copper wire as a minimum, and shall be connected in pairs so that horizontal cable and connected jumper wires are on separate connected terminals. Punch down type 66B3 crossconnect connecting blocks shall be provided to terminate all subscriber lines. The blocks shall be attached to the right side of the plywood telephone backboard in vertical rows.

2.3 Protectors

Protector terminals shall incorporate gas tube surge arresters, REA PE-80. Type 189 protector terminals shall be furnished and installed.

2.4 EQUIPMENT MOUNTING BACKBOARD

Plywood backboards, 1.22M (4 ft) high X 1.22M (4 ft) wide X 19 mm (3/4 inch) thick, shall be provided, sized as shown, painted with two-coats insulating varnish finish.

2.5 TELECOMMUNICATIONS OUTLET BOXES

Electrical boxes for telecommunication outlets shall be 117 mm square by 53 mm deep with minimum 9 mm deep single or two gang plaster ring as shown. Provide a minimum 21 mm conduit.

PART 3 EXECUTION

3.1 INSTALLATION

System components and appurtenances shall be installed in accordance with NFPA 70, manufacturer's instructions and as shown. Necessary interconnections, services, and adjustments required for a complete and operable signal distribution system shall be provided. Components shall be labeled in accordance with EIA ANSI/TIA/EIA-606. Penetrations in fire-rated construction shall be firestopped in accordance with Section 07270 FIRESTOPPING and NFPA 70, NEC 300 21. Conduits, outlets and raceways shall be installed in accordance with Section 16415 ELECTRICAL WORK, INTERIOR. Wiring shall be installed in accordance with EIA ANSI/TIA/EIA-568-A and as specified in Section 16415 ELECTRICAL WORK, INTERIOR. Wiring, and terminal blocks and outlets shall be marked in accordance with EIA ANSI/TIA/EIA-606.

3.1.1 Horizontal Distribution Cable

The rated cable pulling tension shall not be exceeded. Cable shall not be stressed such that twisting, stretching or kinking occurs. Cable shall not be spliced. Copper cable not in a wireway shall be suspended a minimum of 200 mm above ceilings by cable supports no greater than 1.5 m apart. Cable shall not be run through structural members or in contact with pipes, ducts, or other potentially damaging items. Placement of cable parallel to power conductors shall be avoided, if possible; a minimum separation of 300 mm (12 inches) shall be maintained when such placement cannot be avoided. Cables shall be terminated; no cable shall contain unterminated elements. Minimum bending radius shall not be exceeded during installation or once installed. Cable ties shall not be excessively tightened such that the transmission characteristics of the cable are altered.

3.1.2 Telecommunications Outlets

3.1.2.1 Faceplates

As a minimum each jack shall be labeled as to its function and a unique number to identify cable link.

3.1.2.2 Cables

Unshielded twisted pair shall have a minimum of 150 mm of slack cable loosely coiled into the telecommunications outlet boxes. Minimum manufacturers bend radius for each type of cable shall not be exceeded.

3.1.2.3 Pull Cords

Pull cords shall be installed in all conduit serving telecommunications outlets which do not initially have fiber optic cable installed.

3.1.3 Terminal Blocks

Terminal blocks shall be mounted in orderly rows and columns. Adequate vertical and horizontal wire routing areas shall be provided between groups of blocks. Industry standard wire routing guides shall be utilized.

3.1.4 Communications Raceways

Communications raceways indicated shall be installed in accordance with the previous requirement for conduit and tubing and with the additional requirement that no length of run shall exceed 20 meters for 21 mm sizes,

and 30 meters for 27 mm size or larger, and shall not contain more than two 90-degree bends or the equivalent. Additional pull or junction boxes shall be installed to comply with these limitations whether oror not indicated. Inside radii of bends in conduits of 27 mm (1 inch) size or larger shall be not less than ten times the normal diameter.

3.1.5 Conduit Below Slab-on-Grade or in the Ground

All cables below slab-on-grade shall be protected by a conduit system. No conduit system shall be installed horizontally within concrete slab-on-grade. For slab-on-grade construction, horizontal runs of rigid plastic or rigid steel or IMC shall be installed below the floor slab. Conduit passing vertically through slabs-on-grade shall be rigid steel or IMC.

Rigid steel or IMC conduits installed below slab-on-grade or in the earth shall be field-wrapped with 0.254 mm thick pipe-wrapping plastic tape applied with a 50 percent overlay, or shall have a factory-applied polyvinyl chloride, plastic resin, or epoxy coating system.

3.1.5.1 Duct and Fittings, Nonmetallic Type for Installation Underground

Wall thicknesses and fittings shall be suitable for the application. Ducts shall be single, round-bore type. Ducts shall be of the same material when used for applications requiring the same type of wall thickness.

3.1.5.2 Plastic

NEMA TC 6 thickwall Type DB. Conduit fittings shall conform to the applicable NEMA standards, except that where NEMA standards for conduit fittings do not exist for the type of plastic installed, fittings shall be as recommended by the conduit manufacturer.

3.1.6 Duct Lines

Duct Lines shall conform to the requirements of section 16375 ELECTRICAL DISTRIBUTION SYSTEM, UNDERGROUND.

3.1.6.1 Requirements

Numbers and sizes of ducts shall be as indicated. Duct lines shall be laid with a minimum slope of 4-inches per 100 feet. Depending on the contour of the finished grade, the high-point may be at a terminal, a manhole, a handhole, pullbox, or between manholes, pullboxes or handholes. Ducts shall be provided with end bells whenever duct lines terminate in manholes, pullboxes or handholes. Duct line markers shall be provided as indicated at the ends of long duct line stubouts or for other ducts whose locations are indeterminate because of duct curvature or terminations at completely below-grade structures. In lieu of markers, a 5-mil brightly colored metalic tape not less than 3 inches in width and inscribed "TELEPHONE" at not more than 10 feet on centers with a continuous metallic backing and a corrosion resistant 1-mil metallic foil core to permit easy location of the duct line, shall be placed approximately 12 inches below finished grade levels of such lines. A 1/4 inch nylon pull rope shall be installed in all duct runs.

3.1.6.2 Treatment

Ducts shall be kept clean of concrete, dirt, or foreign substances during construction. Field cuts requiring tapers shall be made with proper tools and match factory tapers. After a duct line is completed, a standard flexible mandrel shall be used for cleaning followed by a brush with stiff bristles. Mandrels shall be at least 12 inches long and have diameters 1/4 inch less than the inside diameter of the duct being cleaned.

Ducts shall be stored to avoid warping and deterioration with ends sufficiently plugged to prevent entry of any water or solid substances. Ducts shall be thoroughly cleaned before being laid. Plastic ducts shall be stored on a flat surface and protected from the direct rays of the sun.

3.1.6.3 Installation of the Couplings

Joints in each type of duct shall be made up in accordance with the manufacturer's recommendations for the particular type of duct and coupling selected and as approved. In the absence of specific recommendations, various types of duct couplings shall be made water tight as specified.

3.1.6.4 Plastic Duct

Duct joints shall be made by brushing a plastic solvent cement on insides of plastic coupling fittings and on outsides of duct ends. Each duct and fitting shall be slipped together with a quick one-quarter-turn twist to set the joint tightly.

3.1.6.5 Duct Sealant

After cable as been placed, each lateral duct at the building, each entrance and exit duct in each manhole, and each riser and pedestal location shall be sealed. Compounds for sealing ducts and conduit shall have putty-like consistency workable with the hands at temperatures as low as 35 degrees F,. and shall not harden materially when exposed to the air. Compounds shall readily calk or adhere to clean surfaces of plastic or metallic raceways, cable shields, jackets, covers, or insulation. Compounds shall form a seal without dissolving, noticeably changing characteristics, or removing any of the ingredients. Compounds shall have no injuries effect upon the hands of workmen or upon materials.

3.1.7 Building Entry

Conduits for underground telephone cable shall be installed as indicated in SECTION: 16375 ELECTRICAL DISTRIBUTION SYSTEM, UNDERGROUND and as shown on drawings.

3.1.8 Cable

All telephone cable shall have the number of insulated twisted pairs as indicated or as shown on the drawings. All telephone cables shall be installed in raceways unless otherwise indicated on the drawings.

3.1.8.1 Gauranteed Pairs

All pairs in each cable shall be usable. All conductors for the incoming and tie cables shall be usable except those identified as defective by the manufacturer.

3.1.8.2 Station Cables

The contractor shall provide two 4-pair inside wiring telephone cables per telephone/data outlet assembly in raceway/conduits unless otherwise indicated on the drawings. All pairs installed on outlets/assemblies shall be workable.

3.1.8.3 Splicing

Splicing shall be in accordance with REA PC-2. All pairs shall be spliced. All outside cable splice shall be watertight. Cable shields shall be bonded together at all cable splices with bonding harness to maintain sheath continuity. Splices shall be grounded to the manhole grounding system in accordance with paragraph GROUNDING. Splicing of entrance feeder cables shall be by others.

3.1.8.4 Cable Installation

Cables shall be handled and placed in such a manner as to avoid kinks and other shield deformities. Cables kinked or flattened shall not be installed. Lead sleeves or duct splices shall not be permitted. Cable racks and hooks shall be installed in manholes to support installed cables. All outdoor connections shall be weatherproof through the use of weather boots or other approved methods. All filled cable splice points in underground facilities shall be encapsulated using re-enterable type splice cases and encapsulant compound. All air core cable splice points shall be sealed in an airtight pressure type splice case and shall be tested with 15 PSI back pressure to insure there are no leaks.

3.2 TERMINATION

Cables and conductors shall sweep into termination areas; cables and conductors shall not bend at right angles. Manufacturer's minimum bending radius shall not be exceeded. When there are multiple system type drops to individual workstations, relative position for each system shall be maintained on each system termination block or patch panel.

3.2.1 General

All inside wiring (IW) telephone cables shall be numbered, terminated at the telephone/data jack assembly end, terminal block end, and tagged at both ends to provide permanent identification. Termination of inside wire at the telephone terminal back board (TTB) or telephone terminal cabinet (TTC) end shall be made on type 110 terminal blocks. IW cables not installed in raceways/conduits shall be properly secured using cable tie wraps. Terminations in accordance with REA PE-87. All equipment Category 5 rated.

3.2.2 Building Entry Protection Terminals

Building entry protection terminals will be furnished and installed by others.

3.2.3 Terminal Blocks

Type 110 ABI-100FT (110 type hardware backboard kit) terminal blocks shall be provided at the TTB or TTC to terminate and cross-connect all lines. Separate 110 terminal blocks will be used for telephone and data outlet assemblies IW terminations. Terminal blocks shall be stenciled to indicate telephone/data outlet assembly numbers using black marking on designation strips provided in the 110 type hardware backboard kits. Use sequential numbering that doesn't exist on new or existing blocks. The telephone/data

outlets/assemlies will be stenciled on the face plate with the same number as its location number on the terminal blocks. Cross-connections at TTB or TTC from terminal blocks to feeder cable protector modules will be done by others. All equipment Category 5 rated.

3.2.4 Telephone/data Outlets

Termination at each respective telephone/data outlet assembly shall be made on dual 8-pin modular jack assemblies (type M100 BH-246 "Voice" jack and Type M100 CH-246 "Data" jack) mounted on a duplex 2 hole outlet face plate (type M12A-246) as indicated on the Drawings. Where outlets have been designated for wall phones (Type 630B modular wall phone jack) mounted in a simplex housing shall be provided. Telephone/data outlets will be stenciled on the face plate with the same number as its location number on the terminal blocks at the TTB or TTC. The completed installation shall meet EIA/TIA-568 industry standard for "Flush mounted terminals and connectors". All equipment Category 5 rated.

3.2.5 Telephone Terminal Backboard

Telephone terminal backboard (TTB) shall be installed as indicated on the drawings and in enclosures. Plywood shall be finished with two coats of insulating varnish. The left half of the TTB will be used for mounting the telephone feeder cable protection units. The right half of the TTB will be used for mounting and terminating of IW telephone cables, and terminal blocks.

3.3 GROUNDING

Signal distribution system ground shall be installed in the telecommunications entrance facility and in each telecommunications closet in accordance with EIA ANSI/TIA/EIA-607 and Section 16415 ELECTRICAL WORK, INTERIOR.

3.3.1 Terminals

Install a #6 AWG solid copper (with grey insulation) conducting ground wire in 3/4" conduit from building ground to the TTB or TTC. Coil several feet of this wire at TTB or TTC. The grounding conductor shall be continuous from the grounding electrode system provided under SECTION: ELECTRICAL WORK, INTERIOR. Protector terminal shall be grounded with No. 6 AWG solid copper conductor to the grounding conductor.

3.4 ADDITIONAL MATERIALS

The Contractor shall provide the following additional materials required for facility startup.

a. 10 of each type outlet.

b. 10 of each type cover plate.

c. 1 of each type terminal block for each telecommunications closet.

d. 1 Set of any and all special tools required to establish a cross connect and to change and/or maintain a terminal block.

3.5 ADMINISTRATION AND LABELING

3.5.1 Labeling

3.5.1.1 Labels

All labels shall be in accordance with EIA ANSI/TIA/EIA-606.

3.5.1.2 Cable

All cables will be labeled using color labels on both ends with encoded identifiers per EIA ANSI/TIA/EIA-606.

3.5.1.3 Termination Hardware

All workstation outlets connections will be labeled using color coded labels with encoded identifiers per EIA ANSI/TIA/EIA-606.

3.6 TESTING

Materials and documentation to be furnished under this specification are subject to inspections and tests. All components shall be terminated prior to testing. Equipment and systems will not be accepted until the required inspections and tests have been made, demonstrating that the signal distribution system conforms to the specified requirements, and that the required equipment, systems, and documentation have been provided.

3.6.1 Unshielded Twisted Pair Tests

All metallic cable pairs shall be tested for proper identification and continuity. All opens, shorts, crosses, grounds, and reversals shall be corrected. Correct color coding and termination of each pair shall be verified in the communications closet and at the outlet. Horizontal wiring shall be tested from and including the termination device in the communications closet to and including the modular jack in each room. Backbone wiring shall be tested end-to-end, including termination devices, from terminal block to terminal block, in the respective communications closets. These test shall be completed and all errors corrected before any other tests are started.

3.6.2 Category 5 Circuits

All category 5 circuits shall be tested using a test set that meets the Class II accuracy requirements of EIA TSB 67standard. Testing shall use the Basic Link Test procedure of EIA TSB 67. If more than 5 percent of the category 3 circuits tested fail, then all category 3 circuits shall be tested. Cables which contain failed circuits shall be replaced and retested to verify the standard is met.

-- End of Section --

SECTION TABLE OF CONTENTS

DIVISION 16 - ELECTRICAL

SECTION 16711

TELEPHONE SYSTEM, OUTSIDE PLANT

PART 1 GENERAL

1.1 REFERENCES
1.2 SYSTEM DESCRIPTION
1.2.1 Year 2000 Compliant Equipment
1.3 QUALIFICATIONS
1.3.1 Cable Installers
1.3.2 Cable Splicing and Termination
1.3.3 Manufacturers
1.4 SUBMITTALS
1.5 DELIVERY AND STORAGE
1.5.1 Cable Requirements-
1.5.2 Equipment

PART 2 PRODUCTS

2.1 STANDARD PRODUCTS
2.2 CABLE
2.2.1 Copper Conductor Cable
2.2.1.1 Underground
2.2.2 Fiber Optic Cable
2.2.2.1 Cable Cores
2.2.2.2 Optical Fiber
2.2.2.3 Shielding or Other Metallic Covering
2.2.2.4 Performance Requirements
2.3 HANDHOLE AND DUCT
2.3.1 New Handhole
2.3.2 Duct/Conduit
2.3.3 Innerduct
2.4 FIBER-OPTIC TERMINATIONS
2.4.1 Fiber Optic Connectors
2.5 MISCELLANEOUS ITEMS
2.5.1 Warning Tape

PART 3 EXECUTION

3.1 INSTALLATION
3.1.1 Cable Inspection and Repair
3.1.2 Underground Cable
3.1.2.1 Cable Pulling
3.1.2.2 Penetrations for Cable Access
3.1.2.3 Cable Bends
3.1.3 Handhole and Ducts
3.1.3.1 Innerduct Installation
3.1.3.2 Pull Cord
3.2 GROUNDING

3.3 CUTOVER AND RECORDS
3.4 ACCEPTANCE TESTS
3.4.1 Copper Conductor Cable
3.4.2 Fiber Optic Cable
3.4.2.1 OTDR Test
3.4.2.2 Attenuation Test
3.4.2.3 Bandwidth Test

-- End of Section Table of Contents --

SECTION 16711

TELEPHONE SYSTEM, OUTSIDE PLANT

PART 1 GENERAL

1.1 REFERENCES

The publications listed below form a part of this specification to the extent referenced. The publications are referred to in the text by basic designation only.

AMERICAN SOCIETY FOR TESTING AND MATERIALS (ASTM)

ASTM D 2239	(1996a) Polyethylene (PE) Plastic Pipe (SIDR-PR) Based on Controlled Inside Diameter

ELECTRONIC INDUSTRIES ASSOCIATION (EIA)

EIA ANSI/EIA-455-81A	(1992) FOTP-81 Compound Flow (Drip) Test for Filled Fiber Optic Cable
EIA ANSI/EIA/TIA-455-30B	(1991) FOTP-30 Frequency Domain Measurement of Multimode Optical Fiber
EIA ANSI/EIA/TIA-455-53A	(1990) FOTP-53 Attenuation by Substitution Measurement for Multimode Graded-Index Optical Fibers or Fiber Assemblies Used in Long Length Communications Systems
EIA ANSI/EIA/TIA-455-78A	(1990; R 1995) FOTP-78 Spectual Attenuation Cutback Measurement for Single Mode Optical Fibers
EIA ANSI/TIA/EIA-568A	(1995) Commercial Building Telecommunications Cabling Standard

INSTITUTE OF ELECTRICAL AND ELECTRONICS ENGINEERS (IEEE)

IEEE C2	(1997) National Electrical Safety Code

NATIONAL FIRE PROTECTION ASSOCIATION (NFPA)

NFPA 70	(1996; Errata 96-4) National Electrical Code

RURAL UTILITIES SERVICE (RUS)

RUS REA Bulletin 345-90	(1986) Totally Filled Fiber Optic Cable (PE-90)
RUS REA Bulletin 345-151	(1989) Specifications and Drawings for Conduit and Manhole Construction (Form 515c)

RUS REA Bulletin 1751F-641	(1995) Construction of Buried Plant
RUS REA PC-4	(1976) Acceptance Tests and Measurements of Telephone Plant
RUS REA PE-39	(1993) REA Specification for Filled Telephone Cables
RUS REA TE&CM 643-02	(1983) Underground Conduit and Manhole Design and Construction (Physical Plant)

1.2 SYSTEM DESCRIPTION

The outside plant system shall consist of all cable, conduit, handhole, vault, manholes, poles, etc. required to provide signal paths from the closest point of presence to the new facility, including free standing frames or backboards, terminating cables, lightning and surge protection modules at the entry facility. The work consists of furnishing, installing, testing and making operational a complete outside plant system for continuous use. Telephone cable(s) and fiber optic cable shall run continuous from telephone terminal backboard (TTB) in the Repair facility to Communications building. There shall be no splices, damage, or repairs made to the cable. If there is damage cables shall be replaced. Slack in cables shall be provided in handhole and vault. Provide extra cable length at the TTB in the Repair facilty for the fiber optic cable as indicated on the drawings and connect the incoming telephone cable to the blocks. In the Communications building provide extra cable length for telephone and fiber optic cable as indicated on the drawings. Connections to be made by others in the Communications building.

1.2.1 Year 2000 Compliant Equipment

Where applicable, all equipment specified shall be Year 2000 compliant and shall be able to accurately process date/time data (including, but not limited to, calculating, comparing, and sequencing) from, into, and between the twentieth and twenty-first centuries, including leap year calculations, when used in accordance with the product documentation provided by the contractor, provided that all products (e.g. hardware, software, firmware) used in combination with other information technology, shall accurately process date/time data if the other information technology properly exchanges date/time data with it.

1.3 QUALIFICATIONS

1.3.1 Cable Installers

Installation shall be under the direct supervision of an individual with a minimum of 3 years experience in the installation of the specified copper and fiber optic cable and components.

1.3.2 Cable Splicing and Termination

All cable splicers shall have training in the proper techniques and have a minimum of 3 years experience in splicing and terminating the specified cables. Modular splices shall be performed by factory certified personnel or under direct supervision of factory trained personnel for products used.

1.3.3 Manufacturers

The cable, equipment, and hardware provided shall be from manufacturers that have a minimum of 3 years experience in producing the types of cable, equipment, and hardware specified.

1.4 SUBMITTALS

Government approval is required for submittals with a "GA" designation; submittals having an "FIO" designation are for information only. The following shall be submitted in accordance with Section 01330 SUBMITTAL PROCEDURES:

SD-01 Data

Spare Parts and Equipment List; FIO.

A data list of recommended spare parts, tools, and test equipment for each different item of material and equipment specified prior to beneficial occupancy. The data shall include a complete list of parts and supplies, with current unit prices and source of supply.

SD-04 Drawings

Telephone System; FIO.

Detail drawings, consisting of a complete list of equipment and material, including manufacturer's descriptive and technical literature, performance charts and curves, and catalog cuts. Detail drawings shall also contain complete configuration information, wiring diagrams and any other details required to demonstrate that the cable system has been coordinated to support the transmission systems identified in the specifications and drawings. Drawings shall show proposed layout and anchorage of equipment and appurtenances, and equipment relationship to other parts of the work including clearance for maintenance and operations.

Record Drawings; GA.

Record drawings for the installed wiring system showing the actual location of all cable terminations, splices, routing, and size and type of all cables. The identifier for each termination and cable shall appear on the drawings. The drawings shall include gauge and pair or fiber count for each cable, duct and innerduct arrangement, or conductor assignment of outside plant, and protector and connector block layout at the termination points after installation.

SD-06 Instructions

Installation; GA.

Printed copies of the manufacturer's recommendations for the material being installed, prior to installation. Installation of the item will not be allowed to proceed where installation procedures, or any part thereof, are required to be in accordance with those recommendations until the recommendations are received and approved.

SD-08 Statements

Acceptance Tests; GA.

Test plans defining all tests required to ensure that the system meets specified requirements. The test plans shall define milestones for the tests, equipment, personnel, facilities, and supplies required. The test plans shall identify the capabilities and functions to be tested.

Cutover and Records; GA.

The cutover plan shall provide procedures and schedules for relocation of facility station numbers without interrupting service to any active location.

SD-09 Reports

Acceptance Tests; FIO.

Test reports in booklet form showing all field tests performed, upon completion and testing of the installed system. Measurements shall be tabulated on a pair by pair or strand by strand basis.

SD-13 Certificates

Telephone System; FIO.

Proof that the items furnished under this section conform to the specified requirements in FCC, ICEA, REA, RUS, ANSI, ASTM, NFPA, EIA, or UL, where materials and equipment are so specified.

Qualifications; GA.

The qualifications of the manufacturer, splicer, and installation supervisor as specified.

1.5 DELIVERY AND STORAGE

1.5.1 Cable Requirements-

All cable shall be shipped on reels. The diameter of the drum shall be large enough to prevent damage to the cable during reeling and unreeling. The reels shall be constructed to prevent damage during shipment and handling. The outer end of the cable shall be securely fastened to the reel head to prevent the cable from becoming loose in transit. The inner end of the cable shall project into a slot in the side of the reel, or into a housing on the inner slot of the drum, with sufficient length to make it available for testing. The inner end shall be fastened to prevent the cable from becoming loose during installation. End seals shall be applied to each of the cables to prevent moisture from entering the cable. The reels with cable shall be suitable for outside storage conditions when the temperature ranges from minus 40 to plus 65 degrees C, with relative humidity from 0 to 100 percent.

1.5.2 Equipment

All equipment shall be stored with protection from the weather, humidity and temperature variations, dirt and dust, or other contaminants, in accordance with the manufacturer's requirements.

PART 2 PRODUCTS

2.1 STANDARD PRODUCTS

Materials and equipment shall be the standard products of a manufacturer regularly engaged in the manufacture of such products and shall be the manufacturer's latest standard design that has been in satisfactory use for at least 2 years prior to bid opening. Each major component of equipment shall have the manufacturer's name and type identified on the equipment. All products supplied shall be specifically designed and manufactured for use with outside plant communications systems. All items of the same class of equipment shall be the products of a single manufacturer.

2.2 CABLE

2.2.1 Copper Conductor Cable

Copper conductor cable shall conform to the following:

2.2.1.1 Underground

Cable shall be manufactured per RUS REA PE-39. A 0.12 mm copper clad alloy steel or 0.12 mm copper clad stainless steel metallic shield shall be provided.

2.2.2 Fiber Optic Cable

Reeled fiber optic cable shall be specifically designed for outside use, be filled or loose buffer construction, and conform to RUS REA Bulletin 345-90.

2.2.2.1 Cable Cores

A central, nonmetallic core member shall be included to serve as a cable core foundation to reduce strain on the fibers, but not to serve as a pulling strength member.

2.2.2.2 Optical Fiber

Single-mode optical fibers shall be Class IV.

2.2.2.3 Shielding or Other Metallic Covering

A copper and stainless steel dual tape metallic covering or shield shall be provided per RUS REA Bulletin 345-90.

2.2.2.4 Performance Requirements

The fiber optic cable shall comply with the specified mechanical performance requirements while used in buried and underground duct applications where the temperature varies from minus 20 to plus 60 degrees C. Optical performance degradation shall be less than 5 percent of the optical performance requirements in the temperature range of minus 20 to plus 60 degrees C. The fiber optic cable shall not be damaged in storage where the temperature may vary from minus 40 to plus 65 degrees C.

2.3 HANDHOLE AND DUCT

All handhole and duct products shall conform to RUS REA TE&CM 643-02.

2.3.1 New Handhole

New handhole shall be equipped with pulling-in irons, cable racks, and

ground rod, and conform to the requirements of RUS REA Bulletin 345-151. Handhole shall be a minimum of as indicated of the drawings. Handhole shall be designed so that the main trunk conduits enter and exit near the center of the ends, and lateral conduits exit on the sides near the corners. Handhole may be pre-cast or cast in place.

2.3.2 Duct/Conduit

Conduit shall be furnished as specified in Sections 16415 ELECTRICAL WORK, INTERIOR and 16375 ELECTRICAL DISTRIBUTION SYSTEM, UNDERGROUND and as shown on project drawings.

2.3.3 Innerduct

Innerduct shall be SIDR 11.5 polyethylene plastic pipe conforming to ASTM D 2239.

2.4 FIBER-OPTIC TERMINATIONS

2.4.1 Fiber Optic Connectors

All outside plant fiber strands shall be terminated in a ST type fiber optic connector at telephone tereminal board in the Repair facility and in the communocations building, with ceramic ferrule material and a maximum insertion loss of 0.5 dB. Connectors shall meet performance standards of EIA ANSI/TIA/EIA-568A. If pre-connectorized cable assemblies or pigtails are used, the connectors shall be terminated on a 3 m length of single-fiber cable. The single-fiber cable shall contain a buffered optical fiber of the same type and specification as that used in the multi-fiber cable.

2.5 MISCELLANEOUS ITEMS

2.5.1 Warning Tape

Marking and locating tape shall be acid and alkali resistant polyethylene film, 150 mm wide with a minimum strength of 12.1 MPa lengthwise and 10.3 MPa crosswise. The tape shall be manufactured with integral wires, foil backing, or other means to enable detection by a metal detector when the tape is buried up to 1 m deep. The metallic core shall be encased in a protective jacket or provided with other means to protect it from corrosion and shall be specifically manufactured for marking and locating underground utilities. The warning tape shall be orange in color and continuously imprinted with the words "WARNING - COMMUNICATIONS CABLE BELOW" at not more than 1.2 m intervals.

PART 3 EXECUTION

3.1 INSTALLATION

All system components and appurtenances shall be installed in accordance with the manufacturer's instructions and as shown. All installation work shall be done in accordance with the safety requirements set forth in the general requirements of IEEE C2 and NFPA 70.

3.1.1 Cable Inspection and Repair

All cable and wire used in the construction of the project shall be handled with care. Each reel shall be inspected for cuts, nicks or other damage.

All damage shall be repaired to the satisfaction of the Contracting Officer. The reel wrap shall remain intact on the reel until the cable or wire is ready to be placed.

3.1.2 Underground Cable

Underground cable installation shall be accomplished in accordance with the requirements set forth in RUS REA Bulletin 1751F-641.

3.1.2.1 Cable Pulling

For cable installed in ducts and conduit, a cable feeder guide shall be used, between the cable reel and the face of the duct and conduit, to protect the cable and guide it into the duct and conduit as it is paid off the reel. As the cable is paid off the reel, it shall be inspected for jacket defects. Precautions shall be taken during installation to prevent the cable from being kinked or crushed. A pulling eye shall be attached to the cable and used to pull the cable through the duct and conduit system. Cable shall be hand fed and guided through each handhole or vault. As the cable is paid off the reel into the cable feeder guide, it shall be sufficiently lubricated with a type of lubricant recommended by the cable manufacturer. Where the cable is pulled through a handhole, additional lubricant shall be applied at all intermediate handhole or vault. Dynamometers or load-tension instruments shall be used to ensure that the pulling line tension does not exceed the installation tension value specified by the cable manufacturer. The mechanical stress placed upon a cable during installation shall not cause the cable to be twisted or stretched.

3.1.2.2 Penetrations for Cable Access

Penetrations in walls, ceilings or other parts of the building, made to provide for cable access, shall be caulked and sealed. Where conduits and ducts pass through fire walls, fire partitions, above grade floors, and fire rated chase walls, the penetration shall be sealed with fire stopping materials as specified in section 07270 FIRE STOPPING. Fire stopped penetrations shall not compromise the fire rating of the walls or floors. All underground building entries shall be through waterproof facilities.

3.1.2.3 Cable Bends

Telephone cable bends shall have a radius of not less than 10 times the cable diameter. Only large radius sweeps shall be used in conduit runs and shall not exceed a cumulative 90 degrees between manholes.

3.1.3 Handhole and Ducts

Handhole and duct systems shall be installed in accordance with Section 16375ELECTRICAL DISTRIBUTION SYSTEM, UNDERGROUND. Handhole shall be placed in line with the main duct. Lateral conduits shall exit the long sides near the corners.

3.1.3.1 Innerduct Installation

Innerduct shall be pulled through new and existing duct from new Repair facility to existing Communications building, interecepted by a-handhole and vault. The innerduct system shall be installedin continuous sections. Splices, joints, couplings, or connections of any type will not be allowed between handhole or vault. Innerduct shall be plugged at both ends with

polyurethane foam duct seal; this material shall also be inserted between the innerduct and the duct if cables are placed in the innerducts. Only one cable shall be installed in a given innerduct. Existing and new unoccupied innerducts shall be trimmed leaving 50 mm exposed.

3.1.3.2 Pull Cord

Pull cords of 10 mm polypropylene shall be installed in all unused ducts and inner-ducts with a minimum of 610 mm spare cord protruding from each end.

3.2 GROUNDING

Except where specifically indicated otherwise, all exposed non-current carrying metallic parts of telephone equipment, cable sheaths, cable splices, and terminals shall be grounded. Grounding shall be in accordance with requirements of NFPA 70, Articles 800-33 and 800-40.

3.3 CUTOVER AND RECORDS

All necessary transfers and cutovers, shall be accomplished by the Contractor.

3.4 ACCEPTANCE TESTS

The Contractor shall provide all personnel, equipment, instrumentation, and supplies necessary to perform all required testing. Notification of any planned testing shall be given to the Contracting Officer at least 14 days prior to any test; testing shall not proceed until after the Contractor has received written Contracting Officer's approval of the test plans as specified. The test plans shall define all the tests required to ensure that the system meets technical, operational, and performance specifications. The test plans shall define milestones for the tests, equipment, personnel, facilities, and supplies required. The test plans shall identify the capabilities and functions to be tested.

3.4.1 Copper Conductor Cable

The following acceptance tests shall be performed in accordance with RUS REA PC-4:

a. Shield continuity.

b. Conductor continuity.

c. Conductor insulation resistance.

d. Structural return loss.

e. Cable insertion loss and loss margin at carrier frequencies.

f. Shield ground for single jacketed cables.

g. DC loop resistance.

3.4.2 Fiber Optic Cable

Two optical tests shall be performed on all optical fibers: Optical Time Domain Reflectometry (OTDR) Test, and Attenuation Test. In addition, a

Bandwidth Test shall be performed on all multi-mode optical fibers. These tests shall be performed on the completed end-to-end spans which include the near-end pre-connectorized single fiber cable assembly, outside plant as specified, and the far-end pre-connectorized single fiber cable assembly.

3.4.2.1 OTDR Test

The OTDR test shall be used to determine the adequacy of the cable installations by showing any irregularities, such as discontinuities, micro-bendings, improper splices, for the cable span under test. Hard copy fiber signature records shall be obtained from the OTDR for each fiber in each span and shall be included in the test results. The OTDR test shall be measured in both directions. A reference length of fiber, 1 km minimum, used as the delay line shall be placed before the new end connector and after the far end patch panel connectors for inspection of connector signature. The OTDR test shall be conducted in accordance with EIA ANSI/EIA-455-81A for single-mode fiber and EIA ANSI/EIA/TIA-455-78A for multi-mode fiber. Splice losses shall not exceed 0.1db. Attenuation losses shall not exceed 0.5 db/km at 1310 nm and 1550 nm for single-mode fiber. Attenuation losses shall not exceed 5.0 db/km at 850 nm and 1.5 db/km at 1300 nm for multi-mode fiber.

3.4.2.2 Attenuation Test

End-to-end attenuation measurements shall be made on all fibers, in both directions, using a 850 and 1300 nanometer light source at one end and the optical power meter on the other end to verify that the cable system attenuation requirements are met. The measurement method shall be in accordance with EIA ANSI/EIA/TIA-455-53A.

3.4.2.3 Bandwidth Test

The end-to-end bandwidth of all multi-mode fiber span links shall be measured by the frequency domain method. The bandwidth shall be measured in both directions on all fibers. The bandwidth measurements shall be in accordance with EIA ANSI/EIA/TIA-455-30B.

-- End of Section --

SECTION TABLE OF CONTENTS

DIVISION 16 - ELECTRICAL

SECTION 16721

FIRE DETECTION AND ALARM SYSTEM

PART 1 GENERAL

1.1 REFERENCES
1.2 GENERAL REQUIREMENTS
1.2.1 Standard Products
1.2.2 Nameplates
1.2.3 Keys and Locks
1.2.4 Tags
1.2.5 Verification of Dimensions
1.2.6 Compliance
1.2.7 Manufacturer's Services
1.2.8 Year 2000 Compliant Equipment
1.3 SYSTEM DESIGN
1.3.1 Operation
1.3.2 Operational Features
1.3.3 Alarm Functions
1.3.4 Primary Power
1.3.5 Battery Backup Power
1.4 SUBMITTALS
1.5 DELIVERY AND STORAGE

PART 2 PRODUCTS

2.1 CONTROL PANEL
2.1.1 Visual Annunciators
2.1.2 Cabinets
2.1.3 Remote System Trouble Audible/Visual Appliance
2.1.4 Circuit Connections
2.2 STORAGE BATTERIES
2.3 BATTERY CHARGER
2.4 MANUAL FIRE ALARM STATIONS
2.5 FIRE DETECTING DEVICES
2.5.1 Heat Detectors
2.5.1.1 Combination Fixed-Temperature and Rate-of-Rise Detectors
2.5.2 Smoke Detectors
2.5.2.1 Ionization Detectors
2.6 NOTIFICATION APPLIANCES
2.6.1 Alarm Horns
2.6.2 Visual Notification Appliances
2.6.3 Combination Audible/Visual Notification Appliances
2.7 FIRE DETECTION AND ALARM SYSTEM PERIPHERAL EQUIPMENT
2.7.1 Ground Rods
2.7.2 Conduit
2.7.3 Wiring
2.7.4 Special Tools and Spare Parts

PART 3 EXECUTION

3.1 INSTALLATION
3.1.1 Power Supply for the System
3.1.2 Wiring
3.1.3 Control Panel
3.1.4 Detectors
3.1.5 Notification Appliances
3.1.6 Annunciator Equipment
3.2 OVERVOLTAGE AND SURGE PROTECTION
3.3 GROUNDING
3.4 TESTING
3.4.1 Preliminary Tests
3.4.2 Acceptance Test
3.5 TRAINING

-- End of Section Table of Contents --

SECTION 16721

FIRE DETECTION AND ALARM SYSTEM

PART 1 GENERAL

1.1 REFERENCES

The publications listed below form a part of this specification to the extent referenced. The publications are referred to in the text by basic designation only.

INSTITUTE OF ELECTRICAL AND ELECTRONICS ENGINEERS (IEEE)

IEEE C62.41	(1991) Surge Voltages in Low-Voltage AC Power Circuits

NATIONAL FIRE PROTECTION ASSOCIATION (NFPA)

NFPA 70	(1993) National Electrical Code
NFPA 72	(1993) National Fire Alarm Code
NFPA 90A	(1993) Installation of Air Conditioning and Ventilating Systems

UNDERWRITERS LABORATORIES (UL)

UL-04	(1994) Fire Protection Equipment Directory
UL 6	(1993) Rigid Metal Conduit
UL 38	(1994; Rev Jan 1994) Manually Actuated Signaling Boxes for Use with Fire-Protective Signaling Systems
UL 268	(1989; Rev May 1989) Smoke Detectors for Fire Protective Signaling Systems
UL 464	(1990) Audible Signal Appliances
UL 467	(1993) Grounding and Bonding Equipment
UL 521	(1993) Heat Detectors for Fire Protective Signaling Systems
UL 797	(1993) Electrical Metallic Tubing
UL 864	(1991; Rev thru May 1994) Control Units for Fire-Protective Signaling Systems
UL 1242	(1983; Rev thru Jul 1993) Intermediate Metal Conduit

1.2 GENERAL REQUIREMENTS

1.2.1 Standard Products

Material and equipment shall be the standard products of a manufacturer regularly engaged in the manufacture of the products and shall be items that have been in satisfactory use for at least 2 years prior to bid opening. Equipment shall be supported by a service organization that can provide service within 24 hours.

1.2.2 Nameplates

Major components of equipment shall have the manufacturer's name, address, type or style, voltage and current rating, and catalog number on a noncorrosive and nonheat-sensitive plate which is securely attached to the equipment.

1.2.3 Keys and Locks

Provide manufacturers standard key locked cabinet door with lock and key standard/keyed alike with base wide fire reporting systems. See Fir Department for key standardization..

1.2.4 Tags

Tags with stamped identification number shall be furnished for keys and locks.

1.2.5 Verification of Dimensions

The Contractor shall become familiar with all details of the work, verify all dimensions in the field, and shall advise the Contracting Officer of any discrepancy before performing the work.

1.2.6 Compliance

The fire detection and internal alarm system and the central reporting system shall be configured in accordance with NFPA 72. The equipment furnished shall be compatible and be UL listed or FM approved or approved or listed by a nationally recognized testing laboratory in accordance with the applicable NFPA standards.

1.2.7 Manufacturer's Services

Services of a manufacturer's representative who is experienced in the installation, adjustment, testing, and operation of the equipment specified shall be provided. The representative shall supervise the installation, adjustment, and testing of the equipment.

1.2.8 Year 2000 Compliant Equipment

Where applicable, all equipment specified shall be Year 2000 compliant and shall be able to accurately process date/time data (including, but not limited to, calculating, comparing, and sequencing) from, into, and between the twentieth and twenty-first centuries, including leap year calculations, when used in accordance with the product documentation provided by the contractor, provided that all products (e.g. hardware, software, firmware) used in combination with other information technology, shall accurately

process date/time data if the other information technology properly exchanges date/time data with it.

1.3 SYSTEM DESIGN

1.3.1 Operation

The fire alarm and detection system shall be a complete, supervised fire alarm system. The system shall be activated into the alarm mode by actuation of any alarm initiating device. The system shall remain in the alarm mode until initiating device is reset and the fire alarm control panel is reset and restored to normal. Alarm initiating devices shall be connected to initiating device circuits (IDC), Style D, in accordance with NFPA 72. Alarm indicating appliances shall be connected to indicating appliance circuits (IAC), Style Z in accordance with NFPA 72. A two-loop conduit system shall be provided so that if any one conduit and all conductors contained in that conduit are severed all IDC, IAC, or SLC on that circuit shall remain functional. A two-loop system is not applicable to the central fire alarm communication center from the local panels. All textual, audible, and visual appliances and systems shall comply with NFPA 72 and NFPA 72G.

Addressable system shall be microcomputer (microprocessor or microcontroller) based with a minimum word size of eight bits.

a. Sufficient memory shall be provided to perform as specified and as shown for addressable system.

b. Individual identity of each addressable device shall be provided for the following conditions:

   alarm
   trouble
   open
   short
   appliances missing/failed
   remote detector - sensitivity adjustment from the panel for smoke detectors

c. All addressable devices shall have the capability of individually being disabled or enabled from the panel.

1.3.2 Operational Features

The system shall have the following operating features:

a. Electrical supervision of alarm IDC and IAC. Smoke detectors shall have combined alarm initiating and power circuits.

b. Electrical supervision of the primary power (ac) supply, battery voltage, placement of alarm zone module (card, PC board) within the control panel, and transmitter tripping circuit integrity.

c. Trouble buzzer and trouble lamp (light emitting diode or neon light) to activate upon a single break, open, or ground fault condition which prevents the required normal operation of the system. The trouble signal shall also operate upon loss of primary power (ac) supply, low battery voltage, removal of alarm zone module (card, PC board), and disconnection of the circuit used for transmitting alarm signals off-premises. A trouble alarm

silence switch shall be provided which will silence the trouble buzzer, but will not extinguish the trouble indicator lamp. After the system returns to normal operating conditions, the trouble buzzer shall again sound until the silencing switch returns to normal position, unless automatic trouble reset is provided.

d. Transmitter disconnect switch to allow testing and maintenance of the system without activating the transmitter but shall provide a trouble signal when disconnected and a restoration signal when reconnected.

e. Evacuation alarm silencing switch or switches which, when activated, will silence alarm devices, but will not affect the zone indicating lamp nor the operation of the transmitter. This switch shall be over-ridden upon activation of a subsequent alarm from an unalarmed zone and the alarm devices will be activated.

f. Electrical supervision of circuits used for supervisory signal services. Supervision shall detect any open, short, or ground.

g. Confirmation or verification modules used on smoke detection initiating circuits. The modules shall interrupt the transmission of an alarm signal to the system control panel for a factory set period. This interruption period shall be adjustable from 1 to 60 seconds and be factory set at 20 seconds. Immediately following the interruption period, a confirmation period shall be in effect during which time an alarm signal if present will be sent immediately to the control panel. All fire alarm devices other than smoke detectors shall be prohibited on circuits controlled by confirmation or verification modules.

h. Zones for alarm shall be arranged as indicated on the contract drawings.

1.3.3 Alarm Functions

An alarm condition on a circuit shall automatically initiate the following functions:

a. Transmission of a signal over the station radio fire reporting system. The signal shall be common for all zones. Signal shall be compatible with the base G.H. Harlow receiver sytem at the Fire Sation.

b. Visual indications of the alarmed zones on the fire alarm control panel annunciator.

c. Continuous sounding of alarm notification appliances throughout the building.

d. Operation of the smoke control system.

e. Deactivation of the air handling units throughout the building.

1.3.4 Primary Power

Operating power shall be provided as required by paragraph Power Supply for the System. Transfer from normal to emergency power or restoration from emergency to normal power shall be fully automatic and not cause

transmission of a false alarm. Loss of ac power shall not prevent transmission of a signal via the fire reporting system upon operation of any initiating circuit.

1.3.5 Battery Backup Power

Battery backup power shall be through use of rechargeable, sealed-type storage batteries and battery charger.

1.4 SUBMITTALS

Government approval is required for submittals with a "GA" designation; submittals having an "FI0" designation are for information only. The following shall be submitted in accordance with Section 01330 SUBMITTAL PROCEDURES:

SD-01 Data

Battery; FIO.

Substantiating battery calculations for supervisory and alarm power requirements. Ampere-hour requirements for each system component and each panel component, and the battery recharging period shall be included.

Voltage Drop; GA.

Voltage drop calculations for signaling appliance circuits to indicate that sufficient voltage is available for proper appliance operation.

Spare Parts; FIO.

Spare parts data for each different item of material and equipment specified, not later than 2 months prior to the date of beneficial occupancy. Data shall include a complete list of parts and supplies with the current unit prices and source of supply and a list of the parts recommended by the manufacturer to be replaced after 1 year of service.

Qualifications; GA.

Qualifications, with verification of experience and license number, of a Registered Professional Engineer with at least 4 years of current experience in the design of the fire protection and detection systems. This engineer must perform the various specification items required by this section to be performed by a registered Professional Engineer.

SD-04 Drawings

Fire Alarm Reporting System; GA.

Detail drawings, signed by the Registered Professional Engineer, consisting of a complete list of equipment and material, including manufacturer's descriptive and technical literature, catalog cuts, and installation instructions. Note that the contract drawings show layouts based on typical detectors. The contractor shall check the layout based on the actual detectors to be installed and make any necessary revisions in the detail drawings. The detail drawings shall also contain complete wiring and schematic diagrams for the equipment furnished, equipment layout, and any other details required to demonstrate that the system has been coordinated and will properly function as a unit.

Detailed point-to-point wiring diagram, signed by the Registered Professional Engineer, showing all points of connection. Diagram shall include connections between system devices, appliances, control panels, supervised devices, and all equipment that is activated or controlled by the panel.

SD-06 Instructions

Fire Alarm Reporting System; FIO.

Six copies of operating instructions outlining step-by-step procedures required for system startup, operation, and shutdown. The instructions shall include the manufacturer's name, model number, service manual, parts list, and brief description of all equipment and their basic operating features. Six copies of maintenance instructions listing routine maintenance procedures, possible breakdowns and repairs, and troubleshooting guide. The instructions shall include conduit layout, equipment layout and simplified wiring, and control diagrams of the system as installed. Instructions shall be approved prior to training.

Training; FIO.

Lesson plans and training data, in manual format, for the training courses.

SD-08 Statements

Test Procedures; FIO.

Detailed test procedures, signed by the Registered Professional Engineer, for the fire detection and alarm system 60 days prior to performing system tests.

SD-09 Reports

Testing; FIO.

Test reports in booklet form showing all field tests performed to prove compliance with the specified performance criteria, upon completion and testing of the installed system. Each test report shall document all readings, test results and indicate the final position of controls.

SD-13 Certificates

Equipment; FIO.

Certified copies of current approvals or listings issued by UL, FM or other nationally recognized testing laboratory, showing compliance with specified NFPA standards.

Installer; FIO.

The Contractor shall provide documentation demonstrating that its fire detection and alarm system installer has been regularly engaged in the installation of fire detection and alarm systems meeting NFPA standards for a minimum of three years immediately preceding commencement of this contract. Such documentation shall specifically include proof of satisfactory performance on at least three projects similar to that required by these specifications, including the names and telephone numbers

of using agency points of contact for each of these projects. Documentation shall indicate the type of each system installed and include a written certificate that each system has performed satisfactorily in the manner specified for a period of not less than 12 months following completion. All such data shall be submitted 30 days prior to commencement of installation for approval of the Contracting Officer. Listing of the installer under "Protective Signaling Services - Local, Auxiliary, Remote Station Proprietary (UUJS)" of UL-04 shall be accepted as equivalent proof of compliance with the foregoing experience requirements.

1.5 DELIVERY AND STORAGE

All equipment delivered and placed in storage shall be stored with protection from the weather, humidity and temperature variation, dirt and dust, and any other contaminants.

PART 2 PRODUCTS

2.1 CONTROL PANEL

Control Panel shall comply with all the applicable requirements of UL 864. Panel shall be modular, installed in a surface mounted steel cabinet with hinged door and cylinder lock. Control panel shall be a clean, uncluttered, and orderly assembled panel containing all components and equipment required to provide the specified operating and supervisory functions of the system. The panel shall have prominent rigid plastic, phenolic or metal identification plates for all lamps, zones, controls, meters, fuses, and switches. Nameplates for fuses shall also include ampere rating. Separate alarm and trouble lamp shall be provided for each zone alarm located on exterior of cabinet door or be visible through the cabinet door. Control panel switches shall be within the locked cabinet. A suitable means shall be provided for testing the control panel visual indicating devices (meters or lamps). Meters and lamps shall be plainly visible when the cabinet door is closed. Signals shall be provided to indicate by zone any alarm, supervisory or trouble condition on the system. Each IDC initiating circuit shall be powered and supervised so that a signal on one zone does not prevent the receipt of signals from other zones. Loss of power, including any or all batteries, shall not require the reloading of a program. Upon restoration of power, startup shall be automatic, and shall not require any manual operation. The loss of primary power or the sequence of applying primary or emergency power shall not affect the transmission of alarm, supervisory or trouble signals.

2.1.1 Visual Annunciators

Visual annunciators shall be provided for each active zone and spare zone. Six Spare zones shall be provided . Each lamp shall provide specific identification of the zone by means of a permanently attached rigid plastic, phenolic or metal sign with either raised or engraved letters. Zone identification shall consist of word description of the zone.

2.1.2 Cabinets

Cabinets shall be provided with ample gutter space to allow proper clearance between the cabinet and live parts of the panel equipment. If more than one modular unit is required to form a control panel, the units shall be installed in a single cabinet large enough to accommodate all units. Cabinets shall be painted red similar to FED-STD 595 Color, Number 11105.

2.1.3 Remote System Trouble Audible/Visual Appliance

Audible appliance shall have a minimum sound level output rating of 85 dBA at 3.048 m (10 feet) and operate in conjunction with the panel's integral trouble signal. The audible device shall be silenced by the system trouble silence switch. A rigid plastic, phenolic or metal identification sign which reads "Fire Alarm System Trouble" shall be provided at the audible appliance. The visual appliance located with the audible appliance shall not be extinguished until the trouble has been cleared.

2.1.4 Circuit Connections

Circuit conductors entering or leaving the panel shall be connected to screw-type terminals with each terminal marked for identification.

2.2 STORAGE BATTERIES

Storage Batteries shall be provided and shall be the sealed, lead-calcium type requiring no additional water. The batteries shall have ample capacity, with primary power disconnected, to operate the fire alarm system for a period of 48 hours. Following this period of operation via batteries, the batteries shall have ample capacity to operate all components of the system, including all alarm signaling devices in the total alarm mode for a minimum period of 15 minutes. Batteries shall be sized to deliver 50 percent more ampere/hours based on a 48 hour discharged rate than required for the calculated capacities. Battery cabinet shall be a separate compartment within the control panel. Batteries in the control panel shall be located at the bottom of the panel. Battery shall be provided with overcurrent protection in accordance with NFPA 72.

2.3 BATTERY CHARGER

Battery charger shall be completely automatic, with high/low charging rate, capable of restoring the batteries from full discharge to full charge within 12 hours. A separate ammeter shall be provided for indicating rate of charge. A separate voltmeter shall be provided to indicate the state of the battery charge. A pilot light indicating when batteries are manually placed on a high rate of charge shall be provided as part of the unit assembly if a high rate switch is provided. Charger shall be located in control panel or battery cabinet.

2.4 MANUAL FIRE ALARM STATIONS

Manual fire alarm stations shall conform to the applicable requirements of UL 38. Manual stations shall be connected into alarm-initiating circuits. Stations shall be installed on surface where walls are unfinshed such as open stud or grider construction and semi-flush where walls are finshed such as concrete, CMU, or gypboard. mounted outlet boxes. Stations shall be double action type. Stations shall be finished in red, with raised letter operating instructions of contrasting color. Stations requiring the breaking of glass or plastic panels for operation are not acceptable. Stations employing glass rods are acceptable. The use of a key or wrench shall be required to reset the station. Gravity or mercury switches are not acceptable. Switches and contacts shall be rated for the voltage and current upon which they operate. Stations shall have a separate screw terminal for each conductor. Surface mounted boxes shall be painted the same color as the fire alarm manual stations.

2.5 FIRE DETECTING DEVICES

Fire detecting devices shall comply with the applicable requirements of NFPA 72, NFPA 90A, UL 268, and UL 521. The detectors shall be provided as indicated. Detector base shall have screw terminals for making connections. No solder connections will be allowed. Detectors shall be connected into alarm initiating circuits. Detectors located in concealed locations (above ceiling, etc.) shall have a remote visible indicator lamp. Installed devices shall conform to the classification of the area.

2.5.1 Heat Detectors

Heat detectors shall be designed for detection of fire by combination fixed temperature and rate-of-rise principle. Heat detectors shall be rated for a minimum of 15.2 m (50 foot) spacing (smooth-ceiling rated) in accordance with UL 521. Detectors located in areas subject to moisture, exterior atmospheric conditions or hazardous locations as defined by NFPA 70, shall be types approved for such locations. Heat detectors located in attic spaces or similar concealed spaces below the roof shall be intermediate temperature rated.

2.5.1.1 Combination Fixed-Temperature and Rate-of-Rise Detectors

Detectors shall be designed for surface outlet box mounting and supported independently of wiring connections. Contacts shall be self-resetting after response to rate-of-rise principle. Under fixed temperature actuation, the detector shall have a permanent external indication which is readily visible. Detector units located in boiler rooms, showers, or other areas subject to abnormal temperature changes shall operate on fixed temperature principle only. Rating for fixed temperature portion shall be 57.2 degrees C (135 degrees F) in temperature conditioned spaces.

2.5.2 Smoke Detectors

Detectors shall be designed for detection of abnormal smoke densities. Smoke detectors shall be ionization type. Detectors shall contain a visible indicator lamp that shows when the unit is in alarm condition. Detectors shall not be adversely affected by vibration or pressure. Detectors shall be the plug-in type in which the detector base contains terminals for making all wiring connections. Detectors that are in concealed (above false ceilings, etc.) locations shall have a remote visible indicator lamp.

2.5.2.1 Ionization Detectors

Ionization detectors with a dual chamber shall be responsive to both invisible and visible particles of combustion. One chamber shall be a reference chamber and the second a sampling chamber. Detectors containing radium shall not be provided. Detectors shall not cause an alarm condition due to anticipated fluctuations in relative humidity. The sensitivity of the detector shall be field adjustable to compensate for operating conditions. Detector shall require no replacement or readjustment to restore it to normal operation after an alarm condition. Each detector shall be capable of withstanding ambient air velocity up to 1.5 meters per second (300 fpm) in accordance with UL 268. Detectors shall have at least a two-stage sensitivity setting, with detectors initially set for normal sensitivity. A lower sensitivity shall be available for each detector. The lower sensitivity shall be within the limits established for that detector by UL or FM.

2.6 NOTIFICATION APPLIANCES

Audible appliances shall be heavy duty and conform to the applicable requirements of UL 464. Devices shall be connected into alarm indicating circuits and shall have a separate screw terminal for each conductor. Devices shall be painted red similar to FED-STD 595 color, number 11105.

2.6.1 Alarm Horns

Horns shall be surface mounted, with the matching mounting back box surface mounted single projector, vibrating type suitable for use in an electrically supervised circuit. Horns shall produce a minimum sound rating of at least 85 dBA at 3.048 m (10 feet). Horns used in exterior locations shall be specifically listed or approved for outdoor use and be provided with metal housing and protective grills.

2.6.2 Visual Notification Appliances

Visual notification appliances shall have high intensity optic lens and flash tubes. Strobes shall flash at approximately 1 flash per second and a minimum of 1 candela (8,000 peak candle power). Strobe shall besemi-flush mounted.

2.6.3 Combination Audible/Visual Notification Appliances

Combination audible/visual notification appliances shall provide the same requirements as individual units except they shall mount as a unit in standard backboxes. All units shall be factory assembled. Any other audible indicating appliance employed in the fire alarm systems shall be approved by the authority having jurisdiction.

2.7 FIRE DETECTION AND ALARM SYSTEM PERIPHERAL EQUIPMENT

2.7.1 Ground Rods

Ground rods shall be of copper clad steel conforming to UL 467 not less than 19.1 mm (3/4 inch) in diameter by 3.1 m (10 feet) in length.

2.7.2 Conduit

Conduit and fittings shall comply with UL 6, UL 1242 and UL 797.

2.7.3 Wiring

Wiring for 120V ac power shall be No. 12 AWG minimum. Wiring for low voltage dc circuits shall be No. 14 AWG minimum. Power wiring (over 28 volts) and control wiring shall be isolated. All wiring shall conform to NFPA 70. System field wiring shall be solid copper and installed in metallic conduit or electrical metallic tubing, except rigid plastic conduit may be used under slab-on-grade. All conductors shall be color coded. Conductors used for the same functions shall be similarly color coded. Wiring code color shall remain uniform throughout the circuit. Pigtail or T-tap connections to alarm initiating, supervisory circuits, and alarm indicating circuits are prohibited. T-tapping using screw terminal blocks is allowed for addressable systems.

2.7.4 Special Tools and Spare Parts

Special tools necessary for the maintenance of the equipment shall be furnished. Two spare fuses of each type and size required and five spare lamps and LED's of each type shall be furnished. Two percent of the total number of each different type of detector, but no less than two each, shall be furnished. Fuses and lamps shall be mounted in the fire alarm panel.

PART 3 EXECUTION

3.1 INSTALLATION

All work shall be installed as shown and in accordance with the manufacturer's diagrams and recommendations, unless otherwise specified. Smoke detectors shall not be installed until the building has been thoroughly cleaned.

3.1.1 Power Supply for the System

A single dedicated circuit connection for supplying power to each building fire alarm system shall be provided. The primary power shall be supplied as shown on the drawings. The power supply shall be equipped with a locking mechanism and marked "FIRE ALARM CIRCUIT CONTROL".

3.1.2 Wiring

Conduit size for wiring shall be in accordance with NFPA 70. Wiring for the fire alarm system shall not be installed in conduits, junction boxes, or outlet boxes with conductors of lighting and power systems. No more than one conductor shall be installed under any screw terminal. All circuit conductors entering or leaving any mounting box, outlet box enclosure or cabinet shall be connected to screw terminals with each terminal marked in accordance with the wiring diagram. Connections and splices shall be made using screw terminal blocks. The use of wire nut type connectors are prohibited in the system. Wiring within any control equipment shall be readily accessible without removing any component parts. The fire alarm equipment manufacturer's representative shall be present for the connection of wiring to the control panel.

3.1.3 Control Panel

The control panel and its assorted components shall be mounted so that no part of the enclosing cabinet is less than 300 mm nor more than 2 m above the finished floor. All manually operable controls shall be between 900 mm to 1.1 m above the finished floor. Panel shall be installed to comply with the requirements of UL 864.

3.1.4 Detectors

Detectors shall be installed in accordance with NFPA 72. Detectors shall be at least 300 mm from any part of any lighting fixture. Detectors shall be located at least 900 mm from diffusers of air handling systems. Each detector shall be provided with appropriate mounting hardware as required by its mounting location. Detectors which mount in free space shall be mounted directly to the end of the stubbed down rigid conduit drop. Conduit drops shall be firmly secured to minimize detector sway. Where length of conduit drop from ceiling or wall surface exceeds 900 mm, sway bracing shall be provided.

3.1.5 Notification Appliances

Notification appliances shall be mounted a minimum of 2.4 m above the finished floor unless limited by ceiling height or otherwise indicated.

3.1.6 Annunciator Equipment

Annunciator equipment provided shall be mounted where indicated.

3.2 OVERVOLTAGE AND SURGE PROTECTION

All equipment connected to alternating current circuits shall be protected from surges per IEEE C62.41 and NFPA 70. All cables and conductors which serve as communications links, except fiber optics, shall have surge protection circuits installed at each end. Fuses shall not be used for surge protection.

3.3 GROUNDING

Grounding shall be provided to building ground or ground rods shall be driven. Maximum impedance to ground shall be 25 ohms.

3.4 TESTING

The Contractor shall notify the Contracting Officer 30 days before the preliminary and acceptance tests are to be conducted. The tests shall be performed in accordance with the approved test procedures in the presence of the Contracting Officer. The control panel manufacturer's representative shall be present to supervise all tests. The Contractor shall furnish all instruments and personnel required for the tests.

3.4.1 Preliminary Tests

Upon completion of the installation, the system shall be subjected to functional and operational performance tests including tests of each installed initiating and notification appliance. Tests shall include the meggering of all system conductors to determine that the system is free from grounded, shorted, or open circuits. The megger test shall be conducted prior to the installation of fire alarm equipment. If deficiencies are found, corrections shall be made and the system shall be retested to assure that it is functional.

3.4.2 Acceptance Test

Testing shall be in accordance with NFPA 72. The recommended tests in NFPA 72 shall be considered mandatory and shall verify that all previous deficiencies have been corrected. The test shall include the following:

a. Test of each function of the control panel.

b. Test of each circuit in both trouble and normal modes.

c. Tests of alarm initiating devices in both normal and trouble conditions.

d. Tests of each control circuit and device.

e. Tests of each alarm notification appliance.

f. Tests of the battery charger and batteries.

g. Complete operational tests under emergency power supply.

h. Visual inspection of all wiring connections.

i. Opening the circuit at each alarm initiating device and notification appliance to test the wiring supervisory feature.

j. Ground fault

k. Short circuit faults

l. Stray voltage

m. Loop resistance

3.5 TRAINING

Training course shall be provided for the operations and maintenance staff. The course shall be conducted in the building where the system is installed or as designated by the Contracting Officer. The training period shall consist of 3 training days (8 hours per day) and shall start after the system is functionally completed but prior to final acceptance tests. The instructions shall cover all of the items contained in the operating and maintenance instructions.

-- End of Section --

SECTION TABLE OF CONTENTS

DIVISION 16 - ELECTRICAL

SECTION 16722

FIRE ALARM REPORTING SYSTEM, RADIO TYPE

PART 1 GENERAL

1.1 REFERENCES
1.2 GENERAL REQUIREMENTS
1.2.1 Standard Products
1.2.2 Nameplates
1.2.3 Tags
1.2.4 Keys and Locks
1.2.5 Verification of Dimensions
1.2.6 Compliance
1.2.7 Year 2000 Compliant Equipment
1.3 SUBMITTALS
1.4 DELIVERY AND STORAGE
1.5 SYSTEM OPERATION
1.6 ELECTRICAL SUPERVISION

PART 2 PRODUCTS

2.1 RADIO FIRE ALARM TRANSMITTER (TRANSCEIVER)
2.1.1 Frequency Allocation
2.1.2 Power Requirements
2.1.2.1 Battery Power
2.1.2.2 Battery Duration
2.1.2.3 Battery Supervision
2.1.3 Functional Requirements
2.1.3.1 Interfacing Indicators and Controls
2.1.3.2 Generation of Signals
2.1.3.3 Power Output
2.1.3.4 Memory
2.1.3.5 Transmitter Identity Code
2.1.3.6 Message Designations
2.1.4 Transmitter Housings
2.1.4.1 Lock
2.1.4.2 Mounting
2.1.4.3 Labeling
2.1.5 Environmental Operating Requirements
2.1.6 Painting
2.2 RADIO TRANSMITTER INTERFACE DEVICE
2.2.1 Enclosure
2.2.2 Indicators
2.2.3 Access
2.2.4 Mounting
2.2.5 Inputs/Outputs
2.3.3 Antenna System
2.2.5.1 Grounding Conductors
2.3.3.2 Communication Links

2.3 FIRE ALARM SYSTEM PERIPHERAL EQUIPMENT
2.3.1 Conduit
2.3.2 Ground Rods
2.3.3 Wiring
2.3.4 Special Tools and Spare Parts

PART 3 EXECUTION

3.1 INSTALLATION
3.1.1 Power Supply for the System
3.1.2 Wiring
3.2 OVERVOLTAGE AND SURGE PROTECTION
3.3 GROUNDING
3.4 TESTING
3.4.1 Performance Testing
3.4.2 Acceptance Test
3.4.3 Training

-- End of Section Table of Contents --

SECTION 16722

FIRE ALARM REPORTING SYSTEM, RADIO TYPE

PART 1 GENERAL

1.1 REFERENCES

The publications listed below form a part of this specification to the extent referenced. The publications are referred to in the text by basic designation only.

CODE OF FEDERAL REGULATIONS (CFR)

47 CFR 15	Radio Frequency Devices

ELECTRONIC INDUSTRIES ASSOCIATION (EIA)

EIA 222-E	(1991) Structural Standards for Steel Antenna Towers and Antenna Supporting Structures

INSTITUTE OF ELECTRICAL AND ELECTRONICS ENGINEERS (IEEE)

IEEE C62.41	(1991) Surge Voltages in Low-Voltage AC Power Circuits

NATIONAL ELECTRICAL MANUFACTURERS ASSOCIATION (NEMA)

NEMA ICS 1	(1993) Industrial Controls and Systems

NATIONAL FIRE PROTECTION ASSOCIATION (NFPA)

NFPA 70	(1993) National Electrical Code
NFPA 72	(1993) National Fire Alarm Code
NFPA 780	(1992) Lightning Protection Code

UNDERWRITERS LABORATORIES (UL)

UL 6	(1993) Rigid Metal Conduit
UL 467	(1993 Grounding and Bonding Equipment
UL 797	(1993) Electrical Metallic Tubing
UL 1242	(1983; Rev thru Jul 1993) Intermediate Metal Conduit

1.2 GENERAL REQUIREMENTS

1.2.1 Standard Products

Material and equipment shall be the standard products of a manufacturer regularly engaged in the manufacture of the products and shall essentially duplicate items that have been in satisfactory use for at least 2 years prior to bid opening. Equipment shall be supported by a service organization that can provide service within 24 hours.

1.2.2 Nameplates

Major components of equipment shall have the manufacturer's name, address, type or style, voltage and current rating, and catalog number on a noncorrosive and nonheat-sensitive plate which is securely attached to the equipment.

1.2.3 Tags

Tags with stamped identification numbers shall be furnished for keys and locks.

1.2.4 Keys and Locks

Locks shall be keyed alike.

1.2.5 Verification of Dimensions

The Contractor shall become familiar with all details of the work, verify all dimensions in the field, and shall advise the Contracting Officer of any discrepancy before performing the work.

1.2.6 Compliance

The central reporting system shall comply with NFPA 72. The equipment furnished shall be listed by Underwriters Laboratories, or Factory Mutual Engineering and Research, or be approved or listed by a nationally recognized testing laboratory. System preferred by the base is a G.H. Harlow system or equal. The fire alarm reporting system shall be compatible with G.H. Harlow receiver at the Fire Station.

1.2.7 Year 2000 Compliant Equipment

Where applicable, all equipment specified shall be Year 2000 compliant and shall be able to accurately process date/time data (including, but not limited to, calculating, comparing, and sequencing) from, into, and between the twentieth and twenty-first centuries, including leap year calculations, when used in accordance with the product documentation provided by the contractor, provided that all products (e.g. hardware, software, firmware) used in combination with other information technology, shall accurately process date/time data if the other information technology properly exchanges date/time data with it.

1.3 SUBMITTALS

Government approval is required for submittals with a "GA" designation; submittals having an "FI0" designation are for information only. The following shall be submitted in accordance with Section 01330 SUBMITTAL PROCEDURES:

SD-01 Data
Battery; FIO.

Substantiating battery calculations for supervisory and alarm power requirements. Ampere-hour requirements for each system component, each panel component and the battery recharging period shall be included.

Spare Parts; FIO.

Spare parts data for each different item of material and equipment specified, after approval of detail drawings, and not later than 1 months prior to the date of beneficial occupancy. Data shall include a complete list of parts and supplies with the current unit prices and source of supply and a list of the parts recommended by the manufacturer to be replaced after 1 year of service.

Qualifications; GA.

Qualifications, with verification of experience and license number, of a Registered Professional Engineer with at least 4 years of current experience in the design of fire protection and detection systems. This engineer must perform the various specification items required by this section to be performed by a Registered Professional Engineer.

SD-04 Drawings

Fire Alarm Reporting System; GA.

Detail drawings, signed by the Registered Professional Engineer, consisting of a complete list of equipment and material, including manufacturer's descriptive and technical literature, catalog cuts, and installation instructions. Note that the contract drawings shoe layouts based on typical detectors. The contractor shall check the layout based on the actual detectors to be installed and make any necessary revisions in the detail drawings. Detail drawings shall also contain complete wiring and schematic diagrams for the equipment furnished, equipment layout, and any other details required to demonstrate that the system has been coordinated and will properly function as a unit.

Wiring Diagrams; GA.

Detail point-to-point wiring diagram, signed by the Registered Professional Engineer, showing all points of connection. Diagram shall include connections between system devices, appliances, control panels, supervised devices, an all equipment that is activated or controlled by the panel.

SD-06 Instructions

Fire Alarm Reporting System; GA.

Six complete copies of operating instructions outlining step-by-step procedures required for system startup, operation, and shutdown. The instructions shall include the manufacturer's name, model number, service manual, parts list, and brief description of all equipment and their basic operating features. Six copies of maintenance instructions listing routine maintenance procedures, possible breakdowns and repairs, and troubleshooting guide. The instructions shall include conduit layout, equipment layout and simplified wiring, and control diagrams of the system as installed. Instructions shall be approved prior to training.

Training; FIO.

Training course for the operations and maintenance staff. The course shall be conducted in the building where the system is installed or as designated by the Contracting Officer. The training period shall consist of 3 training days (8 hours per day) and shall start after the system is functionally completed but prior to final acceptance tests. The instructions shall cover all of the items contained in the operating and maintenance instructions.

SD-08 Statements

Test Procedures; GA.

Detailed test procedures for the fire alarm reporting system 60 days prior to performing system tests. The test procedures shall be signed by the Registered Professional Engineer.

SD-09 Reports

Testing; GA.

Test reports in booklet form showing all field tests performed to prove compliance with the specified performance criteria, upon completion and testing of the installed system. Each test report shall document all readings, test results and indicate the final position of controls.

SD-13 Certificates

Equipment; GA.

Certified copies of current applicable approvals or listings issued by UL, FM or other nationally recognized testing laboratory showing compliance with applicable NFPA standards.

1.4 DELIVERY AND STORAGE

All equipment delivered and placed in storage shall be protected from the weather, humidity and temperature variations, dirt, dust, and other contaminants.

1.5 SYSTEM OPERATION

The radio system shall report alarms to the radio fire alarm monitoring base station (Base station is a G.H Harlow). The system shall be a completely supervised radio type fire alarm reporting system. The system shall indicate the area of alarm. The radio communication link shall be supervised and operated in accordance with NFPA 72.

1.6 ELECTRICAL SUPERVISION

Electrical supervision shall be provided for all circuits and for all positions of interface panel control switches.

PART 2 PRODUCTS

2.1 RADIO FIRE ALARM TRANSMITTER (TRANSCEIVER)

Radio Fire Alarm Transmitter (Transceiver) shall be compatible with the Radio Fire Alarm Monitoring Base Station (G.H. Harlow). It shall be all solid state and comply with all applicable portions of 47 CFR 15 governing

type acceptance. All transmitters of a common configuration shall be interchangeable with the other devices furnished by the manufacturer. Each transmitter and interface device shall be the manufacturer's current commercial product completely assembled, wired, tested at the factory, and delivered ready for installation and operation.

2.1.1 Frequency Allocation

The transmitters shall operate on a frequency assigned by the base communications officer.

2.1.2 Power Requirements

Transmitters shall be powered by a combination of locally available 120 Vac, and sealed nickel-cadium type batteries requiring no additional water. In the event of loss of 120 Vac power, the transmitter shall automatically switch to battery operation. The switchover shall be accomplished with no interruption of protective service, without adversely affecting the battery-powered capabilities, and shall cause the transmission of a trouble message in no less than 3 seconds. Upon restoration of ac power, transfer back to normal ac power supply shall be automatic and the battery shall be recharged. The converter/battery charger shall be installed within the transmitter housing. Power supply transient filtering shall be provided.

2.1.2.1 Battery Power

The battery package shall be capable of supplying all the power requirements for a given transmitter.

2.1.2.2 Battery Duration

Radio fire alarm transmitter standby battery capacity shall provide sufficient power to operate the transmitter in a normal standby status for a minimum of 60 hours and shall be capable of transmitting alarms during that period.

2.1.2.3 Battery Supervision

Each radio fire alarm transmitter shall constantly monitor and supervise its own battery powered supply. A low-battery condition shall be reported when battery voltage falls below 85 percent of the rated voltage.

2.1.3 Functional Requirements

2.1.3.1 Interfacing Indicators and Controls

Transmitters shall incorporate the provisions for auxiliary interconnection to existing interior alarm systems.

2.1.3.2 Generation of Signals

Each transmitter shall be a standard design which allows the immediate transmission of all initiated signals.

2.1.3.3 Power Output

The radio frequency (RF) power output of each transmitter shall be sufficient for reliable alarm reporting. The minimum RF power output shall be 1 watt.

2.1.3.4 Memory

Transmitters shall have memory capability. Multiple, simultaneous alarms shall not result in the loss of any messages. All such messages shall be stored until they are transmitted.

2.1.3.5 Transmitter Identity Code

Each transmitter shall transmit a distinct identity code number as part of all signals emanating from the transmitter. The identity code shall allow for no less than a 3 digit code selection and be transmitted not less than three complete rounds (cycles).

2.1.3.6 Message Designations

Each transmitter shall allow as a minimum no less than ten distinct and individually identifiable message designations as to the types or causes of transmitter actuation.

a. Master Message: Master messages shall be transmitted upon automatic actuation of the transmitter. The building and zone causing actuation shall be individually identified as part of this transmission. The transmitter shall be capable of identifying and transmitting a minimum of 12 master (zone) messages.

b. Test Message: This message shall be capable of both manual and automatic actuation. When a transceiver method is employed, it shall provide for automatic interrogation at preselected periods or continuous automatic interrogation in accordance with the governing standard. Additionally, transceiver systems shall provide for selective interrogation at times determined by the user. Testing the automatic test actuation will occur a minimum of once in each 24- hour period, at an optionally preselected time. Stability of the electronic actuating device shall be plus or minus 1 minute per month within the temperature range stipulated for system operation. Actuation of the "Test" message designation, regardless of initiating means, shall cause no less than one complete message to be sent.

c. Tamper Message Designation: This message shall be automatically transmitted when a tamper switch is tripped in the transmitter housing.

d. Trouble Message Designation: This message shall be automatically transmitted in the event of a failure in excess of 1 minute of the main operating power source of the transmitter.

2.1.4 Transmitter Housings

The housings on transmitters shall be fabricated from corrosion-resistant cast metal or suitable substitute which has the physical strength sufficient to ward off physical damage normally expected to be received by vandalism. The housing shall be sealed against the entry of moisture, dust, dirt, insects, and other foreign objects.

2.1.4.1 Lock

Internal components shall be protected from vandalism by a tamper-proof

lock on the transmitter housing. The housing shall allow access to all internal components for testing, servicing, and replacement at the installation site.

2.1.4.2 Mounting

Transmitter housings shall be designed for universal mounting on walls, poles, or pedestals. Mounting shall utilize either lag bolts, anchor bolts, stainless steel banding, mounting brackets, or a shackle/bolt combination, as applicable to the specific installation.

2.1.4.3 Labeling

Each publicly accessible transmitter shall be labeled on both sides and on the front surface with the word "FIRE." The label shall be white with red lettering.

2.1.5 Environmental Operating Requirements

The transmitter shall be designed for reliable outside operation in an ambient temperature range of minus minus 30 degrees C (minus 22 degrees F) to plus 60 degrees C (plus 140 degrees F). Transmitters shall be corrosion-resistant and designed for reliable operation under adverse climatic conditions including 200 km per hour (125 mph) winds, ice, rain, and snow storms.

2.1.6 Painting

Radio fire alarm transmitter shall be factory painted. The finish color shall be red similar to FED-STD 595, color number 11105. All painted surfaces damaged during installation shall be repainted to match existing paint.

2.2 RADIO TRANSMITTER INTERFACE DEVICE

The interface device shall provide a means of converting whatever signals are available from the local control equipment into a form that is compatible with the transmitter inputs while still maintaining electrical supervision of the entire system. Interface devices shall be utilized whenever direct connection between local control equipment and the transmitter is not possible. Interface devices shall be completely assembled, wired, tested at the factory, and delivered ready for installation and operation.

2.2.1 Enclosure

When furnished as an independent self-contained device, the interface device shall be incorporated into an enclosure conforming to NEMA ICS 1or other national standard as required by its location.

2.2.2 Indicators

Indicators shall be provided to indicate alarm and trouble conditions and shall consist of a red fire alarm and an amber trouble light. The indicators shall be designed to ensure visibility during daylight hours and to indicate the reporting zone.

2.2.3 Access

Switches and any other controls shall not be accessible without the use of a key. Access to controls shall be by unlocking and opening a panel or door.

2.2.4 Mounting

Interface housings shall be designed for universal mounting on walls, poles, or pedestals. Mounting shall utilize either lag bolts, anchor bolts, stainless steel banding, mounting brackets, or a shackle/bolt combination, as applicable to the specific installation.

2.2.5 Inputs/Outputs

Each interface panel shall provide as a minimum the number of alarm circuit inputs and outputs as indicated. Each input circuit shall be arranged so that the alarm signals shall override the trouble signals.

2.3.3 Antenna System

The antenna system shall utilize vertical polarization antennas, communication links between transmitters/receivers and antennas, and matching networks as needed for the proper coverage. The antenna system shall be either omni-directional or shaped-coveraged as selected by the Contractor based on the topography. The antenna system and cabling shall be furnished to provide adequate system gain. The antennas shall be capable of withstanding the environmental conditions of 201.2 km per hour (125 mph) wind and 12.7 mm (half inch) radial ice without failure. Lightning protection shall comply with NFPA 780. Antenna supporting structures shall comply with EIA 222-E. Antenna perferred by base is G.H Harlow or equal.

2.2.5.1 Grounding Conductors

Antenna grounding conductors shall be minimum 32-strand, No. 17 AWG copper.

2.3.3.2 Communication Links

Transmission line between the transmitter/receiver and the antenna shall be 50-ohm impedance rated for the transmitter output power. Minimum requirement shall be cable that exhibits an attenuation not exceeding 1.1 dB per 30.5 m (100 feet) at 200 mHz.

2.3 FIRE ALARM SYSTEM PERIPHERAL EQUIPMENT

2.3.1 Conduit

Conduit and fittings shall comply with UL 6, UL 1242, and UL 797.

2.3.2 Ground Rods

Ground rods shall be of copper-clad steel conforming to UL 467 not less than 19.1 mm (3/4 inch) in diameter by 3.048 m (10 feet)] in length.

2.3.3 Wiring

Wiring shall be in accordance with NFPA 70 and as indicated. All station wiring shall be color coded.

2.3.4 Special Tools and Spare Parts

Special tools necessary for the maintenance of the equipment shall be furnished. One spare set of fuses of each type and size required and five spare lamps of each type shall be furnished.

PART 3 EXECUTION

3.1 INSTALLATION

All work shall be installed as shown and in accordance with the manufacturer's recommendations, unless otherwise specified. All necessary interconnections, services, and adjustments required for a complete and operational system shall be provided. Electrical work shall be in accordance with NFPA 70.

3.1.1 Power Supply for the System

A single dedicated branch-circuit connection for supplying power to the fire alarm system shall be provided. The backup power supply shall be automatically energized upon failure of the normal power supply.

3.1.2 Wiring

Wiring for systems shall be installed in rigid conduit, intermediate metallic conduit, or electric metallic tubing. The conductors for the fire alarm system shall not be installed in conduits, junction boxes, or outlet boxes with conductors of lighting and power systems. The sum of the cross-sectional areas of individual conductors shall not exceed 40 percent of the interior cross-sectional area of the conduit. Conduit shall comply with NFPA 70. Ample gutter space to accommodate necessary wiring shall be provided.

3.2 OVERVOLTAGE AND SURGE PROTECTION

All equipment connected to alternating current circuits shall be protected from surges per IEEE C62.41 and NFPA 70. All cables and conductors which serve as communications links, except fiber optics, shall have surge protection circuits installed at each end. Fuses shall not be used for surge protection.

3.3 GROUNDING

Ground rods shall not protrude more than 150 mm above grade. Noncurrent-carrying metallic parts associated with radio fire alarm equipment shall have a maximum resistance to solid "earth" ground not to exceed 25 ohms.

3.4 TESTING

The Contractor shall notify the Contracting Officer 30 days before the performance and acceptance tests are to be conducted. The tests shall be performed in the presence of the Contracting Officer under the supervision of the fire alarm system manufacturer's qualified representative. The Contractor shall furnish all instruments and personnel required for the tests.

3.4.1 Performance Testing

Upon completion of the installation, the system shall be subjected to a

complete functional and operational performance test by the Contractor. Test shall determine that the system is free from grounded, shorted, or open circuits. When all corrections have been made, the system shall be retested to assure that it is functional. Copies of performance test reports shall be submitted in accordance with paragraph SUBMITTALS.

3.4.2 Acceptance Test

The testing shall be in accordance with NFPA 72. The recommended tests in NFPA 72 shall be considered mandatory and shall verify that all previous deficiencies have been corrected. The tests shall include the following:

a. Tests to indicate there are no grounded, shorted, or open circuits.

b. Tests of each radio fire alarm transmitter/receiver/transceiver/repeater.

c. Tests of radio fire alarm monitoring base station for all required functions.

d. Tests of normal and emergency power supplies.

3.4.3 Training

The Contractor shall conduct training course for operating staff in the building where the system is installed as designated by the Contracting Officer. The training period shall consist of 3 hours training days, and shall start after the system is functionally completed but prior to the final acceptance tests. The field instructions shall cover all of the items contained in the approved operating and maintenance instructions.

-- End of Section --