INVITATION FOR BIDS

COMBAT ARMS TRAINING FACILITY, FY-97

Vandenberg Air Force Base, California

IFB NO. DACA05-98-B-0018
SPECIFICATION NO. 9573-SPL
DRAWING FILE NO. 221-25-1157

US ARMY CORPS OF ENGINEERS
Sacramento District/Los Angeles District

PROJECT NO. 933002

IMPORTANT NOTICE FOR ALL PROSPECTIVE DOD CONTRACTORS

Contracting Division 24 December 1997

SUBJECT: CENTRAL CONTRACTOR REGISTRATION (CCR)

TO: ALL PROSPECTIVE BIDDERS AND OFFERORS

The director of defense procurement has issued a proposed rule (DFARS Case 97-D005, Federal Register, September 15, 1997) to require that all contractors register in the Department of Defense Central Contractor Registration (CCR) database prior to the award of any contract, basic agreement, basic ordering agreement, or blanket purchase agreement, unless the award results from a solicitation issued on or before March 31, 1998.

You are therefore urged to register in the near future. Registration can be accomplished in one of several ways:

--You may call **1-888-CCR-2423** to obtain a registration packet, and then mail or fax the form directly to the Central Contractor Registration Assistance Center (CCRAC); or

--The form along with the proposed rule is available on-line at **http://www.acq.osd.mil/ec.**

Among other information, contractors will need to provide their DUNS number, taxpayer identification number, commercial and government entity code, business ownership status, and all applicable Standard Industrial Classification (SIC) codes. Contractors will be required to register once and then annually confirm that their registration is accurate and complete.

Your prompt attention to this matter is vital. Please register as soon as possible in order to remain eligible for future defense contract awards.

Sincerely,

Ruth Anne Ijames

Ruth Anne Ijames
Chief, Contracting Division

TABLE OF CONTENTS

001	COVER SHEET
002	CENTRAL CONTRACTOR REGISTRATION (CCR)
003	TABLE OF CONTENTS
004	DD FORM 1707

SECTION	TITLE
00010	SOLICITATION, OFFER AND AWARD (STANDARD FORM 1442) AND PRICING SCHEDULE (005)
00100	INSTRUCTIONS, CONDITIONS AND NOTICES TO BIDDERS/ OFFERORS AND EVALUATION CRITERIA FOR AWARD
00600	REPRESENTATIONS, CERTIFICATIONS AND OTHER STATEMENTS OF BIDDERS/OFFERORS
00700	CONTRACT CLAUSES
00800	SPECIAL CONTRACT REQUIREMENTS

ATTACHMENTS:

ATCH NO.	
0901	GENERAL WAGE DECISION (ATTACHMENT 1)
0902	DD FORM 2051 (ATTACHMENT 2)
0903	PREAWARD SURVEY (ATTACHMENT 3)
0904	SUBCONTRACTING PLAN (ATTACHMENT 4)

	TECHNICAL SPECIFICATIONS
010	(SEE TECHNICAL SPECIFICATIONS' TABLE OF CONTENTS FOR SPECIFICATION SECTIONS INCLUDED IN THIS SOLICITATION/CONTRACT)
	DRAWINGS (SEPARATE PACKAGE) (LIST OF DRAWINGS-SECTION 00800)

NOTE: AS A MINIMUM ANY CONTRACT AWARDED AS A RESULT OF THIS SOLICITATION SHALL CONSIST OF THE FOLLOWING DOCUMENTS:

STANDARD FORM 1442, SECTIONS 00010, 00700, 00800, TECHNICAL SPECIFICATIONS AND DRAWINGS, AND ATTACHMENTS AS DESCRIBED IN CONTRACT DOCUMENT.

SECTION 00600, AS COMPLETED BY AWARDEE, IS INCORPORATED INTO ANY RESULTANT CONTRACT BY REFERENCE.

SECTION 00100 IS INCLUDED FOR SOLICITATION PURPOSES ONLY. THIS SECTION WILL BE REMOVED, MAINTAINED IN THE CONTRACT FILE AND NOT MADE PART OF THE CONTRACT.

AMENDMENTS ARE INCORPORATED INTO THE RESULTANT CONTRACT.

SUBCONTRACTING PLAN (IF REQUIRED) BECOMES AN ATTACHMENT TO AND A MATERIAL PART OF THE CONTRACT.

INFORMATION TO OFFERORS OR BIDDERS

COVER SHEET

1. SOLICITATION NUMBER
DACA05-98-B-0018
Spec. No. 9573

2. *(X one)*

X	a. SEALED BID
	b. NEGOTIATED *(RFP)*
	c. NEGOTIATED *(RFQ)*

INSTRUCTIONS

NOTE THE AFFIRMATIVE ACTION REQUIREMENT OF THE EQUAL OPPORTUNITY CLAUSE WHICH MAY APPLY TO THE CONTRACT RESULTING FROM THIS SOLICITATION.

You are cautioned to note the "Certification of Non-Segregated Facilities" in the solicitation. Failure to agree to the certification will render your reply nonresponsive to the terms of solicitations involving awards of contracts exceeding $25,000 which are not exempt from the provisions of the Equal Opportunity clause.

"Fill-ins" are provided on the face and reverse of Standard Form 1442 or other solicitation documents and Sections of Table of Contents in this solicitation and should be examined for applicability.

See the provision of this solicitation entitled either "Late Bids, Modifications of Bids or Withdrawal of Bids" or "Late Proposals, Modifications of Proposals and Withdrawals of Proposals."

When submitting your reply, the envelope used must be plainly marked with the Solicitation Number, as shown above, and the date and local time set forth for bid opening or receipt of proposals in the solicitation document.

If NO RESPONSE is to be submitted, detach this sheet from the solicitation, complete the information requested on reverse, fold, affix postage, and mail. NO ENVELOPE IS NECESSARY.

Replies must set forth full, accurate, and complete information as required by this solicitation *(including attachments)*. The penalty for making false statements is prescribed in 18 U.S.C. 1001.

3. ISSUING OFFICE *(Complete mailing address, including Zip Code)*
DEPARTMENT OF THE ARMY
U.S. ARMY ENGINEER DISTRICT, SACRAMENTO
CORPS OF ENGINEERS
ATTN: CONTRACTING DIVISION, PLAN ROOM
1325 J STREET
SACRAMENTO, CALIFORNIA 95814-2922

4. ITEMS TO BE PURCHASED *(Brief description)*
SEE SF-1442, BLOCK 10.

TYPE OF CONTRACT: SEE SECTION 00100, FAR CLAUSE 52.216-1

5. PROCUREMENT INFORMATION *(X and complete as applicable)*

X	a. THIS PROCUREMENT IS UNRESTRICTED				
	b. THIS PROCUREMENT IS A 100 % SET-ASIDE FOR ONE OF THE FOLLOWING *(X one)*. (See Section 00700)				(3) Combined Small Business/Labor Area Concerns
		(1) Small Business [8(a)]		(2) Labor Surplus Area Concerns	(4) Small Disadvantaged Business Concerns

6. ADDITIONAL INFORMATION

COMPLETE DETAILS FOR PROPER SUBMISSION OF BIDS ARE FOUND IN SECTIONS 00100, 00600 AND ATTACHMENTS.
REMINDER: ACKNOWLEDGE ALL AMENDMENTS (FILL IN BACK PAGE OF SF-1442 OR RETURN SIGNED COPY OF SF-30). IF ANY OF THE AMENDMENTS FURNISHED AMENDED PAGES WHICH ARE PART OF THE BID, THE AMENDED PAGES MUST BE USED IN THE BID.
BID WILL INCLUDE:

A. COMPLETED AND SIGNED SF-1442 (SECTION 00010)
B. COMPLETED PRICING SCHEDULE (SECTION 00010)
C. COMPLETED REPRESENTATIONS / CERTIFICATIONS (SECTION 00600)
D. DD FORM 2051, CAGE CODE (SEE SECTION 00100, DFARS 252.204-7001, AND ATTACHMENTS). COMPLETE AND SUBMIT IF YOU DO NOT HAVE A CAGE CODE)
E. ACKNOWLEDGEMENT OF AMENDMENTS, IF ANY AMENDMENTS WERE ISSUED
F. ANY OTHER DOCUMENTS REQUIRED BY THE SOLICITATION (SEE ATTACHMENTS SECTION)

7. POINT OF CONTACT FOR INFORMATION

a. NAME (Last, First, Middle Initial) SEE SECTION 00100	b. ADDRESS *(Include Zip Code)*
c. TELEPHONE NUMBER *(Include Area Code and Extension) (NO COLLECT CALLS)* SEE SECTION 00100	SAME AS BLOCK 3 ABOVE

8. REASONS FOR NO RESPONSE *(X all that apply)*			
	a. CANNOT COMPLY WITH SPECIFICATIONS		b. CANNOT MEET DELIVERY REQUIREMENT
	c. UNABLE TO IDENTIFY THE ITEM(S)		d. DO NOT REGULARLY MANUFACTURE OR SELL THE TYPE OF ITEMS INVOLVED
	e. OTHER *(Specify)*		

9. MAILING LIST INFORMATION *(X one)*				
	YES		NO	WE DESIRE TO BE RETAINED ON THE MAILING LIST FOR FUTURE PROCUREMENT OF THE TYPE OF ITEM(S) INVOLVED.

10. RESPONDING FIRM	
a. COMPANY NAME	b. ADDRESS *(Include Zip Code)*

c. ACTION OFFICER			
(1) Typed or Printed Name *(Last, First, Middle Initial)*	(2) Title	(3) Signature	(4) Date Signed *(YYMMDD)*

DD Form 1707 Reverse, MAR 89

FOLD *FOLD*

FOLD *FOLD*

FROM

AFFIX
STAMP
HERE

SOLICITATION NUMBER	
DATE *(YYMMDD)*	LOCAL TIME

TO

DEPARTMENT OF THE ARMY
U.S. ARMY ENGINEER DISTRICT, SACRAMENTO
CORPS OF ENGINEERS
ATTN: CONTRACTING DIVISION, PLAN ROOM
1325 J STREET
SACRAMENTO, CA 95814-2922

SECTION 00010

SOLICITATION, OFFER AND AWARD (STANDARD FORM 1442) AND PRICING SCHEDULE

SOLICITATION, OFFER, AND AWARD (Construction, Alteration, or Repair)	1. SOLICITATION NO.	2. TYPE OF SOLICITATION	3. DATE ISSUED	PAGE OF PAGES
	DACA05-98-B-0018	[X] SEALED BID (IFB) [ ] NEGOTIATED (RFP)	98 FEB 20	1

IMPORTANT - The "offer" section on the reverse must be fully completed by offeror.

4. CONTRACT NO.	5. REQUISITION/PURCHASE REQUEST NO.	6. PROJECT NO.
		933002

7. ISSUED BY CODE	8. ADDRESS OFFER TO
DEPARTMENT OF THE ARMY U.S. ARMY ENGINEER DISTRICT, SACRAMENTO CORPS OF ENGINEERS 1325 J STREET SACRAMENTO, CALIFORNIA 95814-2922	DEPARTMENT OF THE ARMY U.S. ARMY ENGINEER DISTRICT, LOS ANGELES P.O. BOX 2711 LOS ANGELES, CALIFORNIA 90053-2325 ATTN: CONTRACTING DIVISION

9. FOR INFORMATION CALL:	A. NAME	B. TELEPHONE NO. (Include area code) (NO COLLECT CALLS)
	See SECTION 00100	See SECTION 00100

SOLICITATION

NOTE: In sealed bid solicitations, "offer" and "offeror" mean "bid" and "bidder".

10. THE GOVERNMENT REQUIRES PERFORMANCE OF THE WORK DESCRIBED IN THESE DOCUMENTS (Title, identifying no., date):

COMBAT ARMS TRAINING FACILITY, FY-97
VANDENBERG AIR FORCE BASE, CALIFORNIA

Specification No. 9573-SPL

Description: The project will provide construction for a new 6,200 SF single story facility. The new facility willreplace one sub-standard WWII vintage facility which is obsolete. The facility will co-locate classroom training for small arms, weapon maintenance shop, weapons cleaning area, secure weapons storage area, administrative space, and the firing range. The project will include reinforced concrete slab foundation, concrete masonry unit walls, steel frame and roof, fire protection system, new access road, associated interior/exterior utility and mechanical features, exterior features, and all related features necessary to provide a complete and useable facility for its intended use and demolition of the outdated facility (Bldg 21300).

RESPONDERS ARE ADVISED THAT THIS PROJECT MAY BE DELAYED, CANCELED OR REVISED AT ANY TIME DURING THE SOLICITATION, SELECTION, EVALUATION, NEGOTIATION AND/OR FINAL AWARD PROCESS.

Estimated Cost Range of Project: $1,000,000 - 5,000,000

Any Contract awarded under this solicitation will be made pursuant to Public Law 100-656, Small Business Competitiveness Demonstration Program. See DD Form 1707, Block 5 for unrestricted/set-aside information.

11. The Contractor shall begin performance within 10 calendar days and complete it within 300 calendar days after receiving [ ] award, [X] notice to proceed. This performance period is [X] mandatory, [ ] negotiable (See SECTION 00800, FAR 52.211-10 .)

12A. THE CONTRACTOR MUST FURNISH ANY REQUIRED PERFORMANCE AND PAYMENT BONDS? (If "YES," indicate within how many calendar days after award in Item 12B.)	12B. CALENDAR DAYS
[X] YES [ ] NO	Ten (10)

13. ADDITIONAL SOLICITATION REQUIREMENTS:

A. Sealed offers in original and O copies to perform the work required are due at the place specified in Item 8 by 1:00 PM (hour) local time, 98 MAR 24 (date). If this is a sealed bid solicitation, offers will be publicly opened at that time. Sealed envelopes containing offers shall be marked to show the offeror's name and address, the solicitation number, and the date and time offers are due.

B. An offer guarantee [X] is, [ ] is not required.

C. All offers are subject to the (1) work requirements, and (2) other provisions and clauses incorporated in the solicitation in full text or by reference.

D. Offers providing less than 90 calendar days for Government acceptance after the date offers are due will not be considered and will be rejected.

OFFER *(Must be fully completed by offeror)*

14. NAME AND ADDRESS OF OFFEROR *(Include ZIP Code)*

15. TELEPHONE NO. *(Include area code)*
( ) FAX ( )

16. REMITTANCE ADDRESS *(Include only if different than Item 14)*

DUNS:_____ CAGE CODE:_____
CODE FACILITY CODE

17. The offeror agrees to perform the work required at the prices specified below in strict accordance with the terms of this solicitation, if this offer is accepted by the Government in writing within _____ calendar days after the date offers are due. *(Insert any number equal to or greater than the minimum requirement stated in Item 13D. Failure to insert any number means the offeror accepts the minimum in Item 13D.)*

AMOUNTS ▶ See Pricing Schedule

18. The offeror agrees to furnish any required performance and payment bonds.

19. ACKNOWLEDGEMENT OF AMENDMENTS
(The offeror acknowledges receipt of amendments to the solicitation - give number and date of each)

AMENDMENT NO.										
DATE										

20A. NAME AND TITLE OF PERSON AUTHORIZED TO SIGN OFFER *(Type or print)*

20B. SIGNATURE

20C. OFFER DATE

AWARD *(To be completed by Government)*

See pg. 3 for 20D

21. ITEMS ACCEPTED:

22. AMOUNT

23. ACCOUNTING AND APPROPRIATION DATA

24. SUBMIT INVOICES TO ADDRESS SHOWN IN ▶ ITEM
(4 copies unless otherwise specified)

25. OTHER THAN FULL AND OPEN COMPETITION PURSUANT TO
☐ 10 U.S.C. 2304(c) ( ) ☐ 41 U.S.C. 253(c) ( )

26. ADMINISTERED BY CODE

27. PAYMENT WILL BE MADE BY

CONTRACTING OFFICER WILL COMPLETE ITEM 28 OR 29 AS APPLICABLE

☐ 28. NEGOTIATED AGREEMENT *(Contractor is required to sign this document and return _____ copies to issuing office.)* Contractor agrees to furnish and deliver all items or perform all work requirements identified on this form and any continuation sheets for the consideration stated in this contract. The rights and obligations of the parties to this contract shall be governed by (a) this contract award, (b) the solicitation, and (c) the clauses, representations, certifications, and specifications incorporated by reference in or attached to this contract.

☐ 29. AWARD *(Contractor is not required to sign this document.)* Your offer on this solicitation is hereby accepted as to the items listed. This award consummates the contract, which consists of (a) the Government solicitation and your offer, and (b) this contract award. No further contractual document is necessary.

30A. NAME AND TITLE OF CONTRACTOR OR PERSON AUTHORIZED TO SIGN *(Type or Print)*

31A. NAME OF CONTRACTING OFFICER *(Type or Print)*

30B. SIGNATURE

30C. DATE

31B. UNITED STATES OF AMERICA
BY

31C. AWARD DATE

BLOCK 20D:

(1) IF THE OFFEROR IS A JOINT VENTURE, EACH PARTICIPANT IN THE JOINT VENTURE MUST COMPLETE THE FOLLOWING:

Company Name	Signature	Title
Company Name	Signature	Title
Company Name	Signature	Title

NOTE: If a corporation is participating as a member of a Joint Venture, the certificate below must also be completed and signed.

CORPORATION AUTHORIZATION TO PARTICIPATE IN JOINT VENTURE CERTIFICATE

I, _____, certify that I am the Secretary of the corporation
(name)
named as a participant in a Joint Venture on this offer; that
_____, who signed said offer on behalf of the corporation, was
(name)
then _____ of said corporation; that the signature thereto is
(title)
genuine; that said contract was duly signed, sealed and attested for and in behalf of said corporation by authority of its governing body; and that the corporation is authorized to participate in the Joint Venture on this offer.

_____
(Name of Corporation)

_____
(Secretary)

(2) IF THE OFFEROR IS A PARTNERSHIP, LIST FULL NAME OF ALL PARTNERS BELOW. SIGNATURES BY ALL PARTNERS HERE SIGNIFY THAT THE INDIVIDUAL WHO SIGNED THE OFFER IN BLOCK 20B HAS THE AUTHORITY TO BIND THE PARTNERSHIP.

Name	Signature
Name	Signature
Name	Signature

(3) IF THE OFFEROR IS A CORPORATION, THE OFFER SHALL BE SIGNED IN THE CORPORATE NAME FOLLOWED BY THE WORD "BY" AND THE SIGNATURE OF THE PERSON AUTHORIZED TO SIGN THE OFFER IN BLOCK 20B. PROVIDE PROOF THAT THE PERSON SIGNING FOR THE CORPORATION HAS THE AUTHORITY TO BIND THE CORPORATION BY COMPLETING THE FOLLOWING CERTIFICATE:

CORPORATION AUTHORIZATION CERTIFICATE

I, _____, certify that I am the Secretary of the
(name)
corporation named as offeror in the within offer; that _____,
(name)
who signed said offer on behalf of the corporation, was then

_____ of said corporation, that the signature
(title)
thereto is genuine; that said contract was duly signed, sealed and attested for in behalf of said corporation by authority of its governing body.

_____
(Name of Corporation)

_____
(Secretary)

(4) IF THE OFFEROR IS AN INDIVIDUAL DOING BUSINESS AS A FIRM, THE OFFER SHALL BE SIGNED BY THAT INDIVIDUAL IN BLOCK 20B FOLLOWED BY THE WORDS "AN INDIVIDUAL DOING BUSINESS AS _____ (INSERT NAME OF FIRM).

(5) WHEN AN AGENT SIGNS THE OFFER, PROVIDE PROOF OF THE AGENT’S AUTHORITY TO BIND THE PRINCIPAL.

PRICING SCHEDULE

CONTRACTOR SHALL FURNISH ALL PLANT, LABOR, MATERIAL, EQUIPMENT, ETC. NECESSARY TO PERFORM ALL WORK IN STRICT ACCORDANCE WITH THE TERMS AND CONDITIONS SET FORTH IN THE CONTRACT TO INCLUDE ALL ATTACHMENTS THERETO.

ITEM NO.	DESCRIPTION	AMOUNT
0001	COMBAT ARMS TRAINING FACILITY, COMPLETE EXCEPT FOR ITEMS BELOW	$_____
0002	INDIAN TRIBAL MONITOR PRESENT DURING ALL EXCAVATIONS	$_____
	SUBTOTAL PRICE	$_____
OPTIONS		
0003	EARTHWORK FOR PARKING LOT AND ACCESS ROAD (OPTION 4)	$_____
0004	ASPHALT SURFACING FOR PARKING LOT AND ACCESS ROAD (OPTION 5)	$_____
0005	GRAVEL SURFACING FOR PARKING LOT AND ACCESS ROAD (OPTION 6)	$_____
	SUBTOTAL OPTIONS	$_____
	TOTAL PRICE	$_____

1. Prices must be submitted on all individual items of this Pricing Schedule. Failure to do so may be cause for rejection of bids.

2. If a modification to a price is submitted which provides for a lump sum adjustment to the total price, the application of the lump sum adjustment to each item in the Pricing Schedule must be stated. If it is not stated, the bidder/offeror agrees that the lump sum adjustment shall be applied on a pro rata basis to every item in the Pricing Schedule.

3. The bidder/offeror shall distribute his indirect costs (overhead, profit, bond, etc.) over all the items in the Pricing Schedule. The Government will review all submitted Pricing Schedules for any unbalancing of the items. Any submitted Pricing Schedule determined to be unbalanced may be considered nonresponsive and cause the bidder to be ineligible for award.

4. The successful bidder/offeror grants the options listed in the Pricing Schedule to the Government. This option may be exercised any time up to (90) days after receipt of Notice to Proceed. Exercise of the option occurs upon mailing of written notice to the Contractor’s field office or job superintendent. Exercise will be made by the Contracting Officer. The price for exercise of the option includes all work and effort associated with the scope of that item. For determination of lowest bid, see paragraph titled EVALUATION OF OPTIONS in Section 00100 of this solicitation. No additional time for contract completion will be allowed when an option is exercised. The

given contract completion time was formulated to include time necessary to perform all option work.

5. EFARS 52.214-5000 APPARENT CLERICAL MISTAKES - ARITHMETIC DISCREPANCIES (DEC 1995)--EFARS

(a) For the purpose of initial evaluation of bids/offers, the following will be utilized in resolving arithmetic discrepancies found on the face of the Pricing Schedule as submitted by bidders/offerors:

(1) Obviously misplaced decimal points will be corrected;

(2) Discrepancy between unit price and extended price, the unit price will govern;

(3) Apparent errors in extension of unit prices will be corrected;

(4) Apparent errors in addition of lump-sum and extended prices will be corrected.

(b) For the purpose of bid/offer evaluation, the Government will proceed on the assumption that the bidder/offeror intends the bid/offer to be evaluated on basis of the unit prices, the total arrived at by resolution of arithmetic discrepancies as provided above and the bid/offer will be so reflected on the abstract of bids/offers.

(c) These correction procedures shall not be used to resolve any ambiguity concerning which bid is low.

SECTION 00100

INSTRUCTIONS, CONDITIONS AND NOTICES TO BIDDERS/OFFERORS AND EVALUATION CRITERIA FOR AWARD

SECTION 00100

INSTRUCTIONS, CONDITIONS AND NOTICES TO BIDDERS/OFFERORS
AND EVALUATION CRITERIA FOR AWARD

INDEX

PARAGRAPH			PAGE
INSTRUCTIONS, CONDITIONS AND NOTICES TO BIDDERS/OFFERORS:			
1.	SAACONS 52.0214-4581	INQUIRIES (APR 1992)	
2.	SAACONS 52.0214-4582	DIRECTIONS FOR SUBMITTING BIDS/PROPOSALS (APR 1992)	
3.	FAR 52.236-27	SITE VISIT (CONSTRUCTION) (FEB 1995), ALTERNATE I (FEB 1995)	
4.	DFARS 252.204-7001	COMMERCIAL AND GOVERNMENT ENTITY (CAGE) CODE REPORTING (DEC 1991)	
5.	SAACONS 52.0209-4501	CONTRACTOR RESPONSIBILITY, PREAWARD SURVEY (JUL 1995)	
6.	FAR 52.211-14	NOTICE OF PRIORITY RATING FOR NATIONAL DEFENSE USE (SEP 1990)	
7.	DFARS 252.211-7002	AVAILABILITY FOR EXAMINATION OF SPECIFICATIONS, STANDARDS, PLANS, DRAWINGS, DATA ITEM DESCRIPTIONS, AND OTHER PERTINENT DOCUMENTS (DEC 1991)	
8.	DFARS 252.211-7003	BRAND NAME OR EQUAL (DEC 1991)	
9.	SAACONS 52.0211-4805	AVAILABILITY OF SPECIFICATIONS, STANDARDS AND DESCRIPTIONS (OCT 1992)	
10.	FAR 52.214-1	SOLICITATION DEFINITIONS--SEALED BIDDING (JUL 1987)	
11.	FAR 52.214-3	AMENDMENTS TO INVITATIONS FOR BIDS (DEC 1989)	
12.	FAR 52.214-4	FALSE STATEMENTS IN BIDS (APR 1984)	
13.	FAR 52.214-5	SUBMISSION OF BIDS (MAR 1997)	
14.	FAR 52.214-6	EXPLANATION TO PROSPECTIVE BIDDERS (APR 1984)	
15.	FAR 52.214-7	LATE SUBMISSIONS, MODIFICATIONS, AND WITHDRAWALS OF BIDS (MAY 1997)	
16.	FAR 52.214-18	PREPARATION OF BIDS--CONSTRUCTION (APR 1984)	
17.	FAR 52.214-19	CONTRACT AWARD--SEALED BIDDING--CONSTRUCTION (AUG 1996)	
18.	FAR 52.214-34	SUBMISSION OF OFFERS IN THE ENGLISH LANGUAGE (APR 1991)	
19.	FAR 52.214-35	SUBMISSION OF OFFERS IN U.S. CURRENCY (APR 1991)	
20.	SAACONS 52.0214-4583	TELEGRAPHIC BIDS/OFFERS (APR 1992)	
21.	SAACONS 52.0214-4584	FACSIMILE BIDS/OFFERS (APR 1992)	
22.	FAR 52.216-1	TYPE OF CONTRACT (APR 1984)	
23.	SAACONS 52.0219-4581	PREPARATION OF SUBCONTRACTING PLAN (APR 1994)	
24.	FAR 52.222-23	NOTICE OF REQUIREMENT FOR AFFIRMATIVE ACTION TO ENSURE EQUAL EMPLOYMENT OPPORTUNITY (APR 1984)	
25.	SAACONS 52.0228-4504	PERFORMANCE AND PAYMENT BONDS (AUG 1991)	

26.	SAACONS 52.0228-4506	INDIVIDUAL SURETIES IN SUPPORT OF BID BONDS (AUG 1991)
27.	SAACONS 52.228-4507	BID GUARANTEE FORM AND AMOUNT (JAN 1993)
28.	DFARS 252.228-7004	BONDS OR OTHER SECURITY (DEC 1991)
29.	FAR 52.233-2	SERVICE OF PROTEST (AUG 1996)
30.	SAACONS 52.0236-4507	ACCEPTANCE OF OFFERS (AUG 1991)
31.	FAR 52.252-3	ALTERATIONS IN SOLICITATION (APR 1984)
32.	FAR 52.252-5	AUTHORIZED DEVIATIONS IN PROVISIONS (APR 1984)

EVALUATION CRITERIA FOR AWARD:

33.	SAACONS 52.0214-4503	EVALUATION FOR AWARD (JAN 1991)
34.	FAR 52.217-5	EVALUATION OF OPTIONS (JUL 1990)

SECTION 00100

INSTRUCTIONS, CONDITIONS AND NOTICES TO BIDDERS/OFFERORS AND EVALUATION CRITERIA FOR AWARD

INSTRUCTIONS, CONDITIONS AND NOTICES TO BIDDERS/OFFERORS:

1. SAACONS 52.0214-4581 INQUIRIES (APR 1992)

Perspective bidders/offerors should submit inquiries related to this solicitation by writing or calling the following (collect calls will not be accepted):

(1) For information related to amendments and information on bid opening dates or dates set for receipt of proposals:

Plan Room Fax (916) 557-7842

(2) For inquiries of a contractual nature (solicitation requirements, interpretation of contractual language) call:

Ms Tricia Christie, Contract Specialist (916) 557-5228
or fax questions to (916) 557-7854.

For bid results only call (213) 452-3235.

(3) All **technical** questions on the specifications or drawings will be submitted in writing (or faxed) to:

Department of the Army
U.S. Army Engineer District, Sacramento
Corps of Engineers
ATTN: Contracting Division
1325 J Street
Sacramento CA 95814-2922
FAX: (916) 557-7854

(4) Please include the solicitation number, project title and location of project with your questions. Written inquiries must be received by this office not later than 14 calendar days prior to bid opening date/date set for receipt of offers.

(5) For prospective bidders with electronic mail capabilities, questions of a contractual or technical nature can be sent to tchristie@usace.mil. Please include the full name of your company, as well as telephone and fax numbers, in your correspondence.

(6) Oral explanations or instructions are not binding. Any information given to a bidder/offeror which impacts the bid/offer will be given in the form of a written amendment to the solicitation.

2. SAACONS 52.0214-4582 DIRECTIONS FOR SUBMITTING BIDS/PROPOSALS (APR 1992)

Envelopes containing bids/offers must be sealed, marked and addressed as follows:

MARK ENVELOPES:

Solicitation No. DACA05-98-B-0018
Bid Opening/Offer Closing Date: 98 MAR 24
Bid Opening/Offer Closing Time: 1:00 PM (LOCAL TIME)

ADDRESS ENVELOPES TO:

Department of the Army
U.S. Army Engineer District, Los Angeles
ATTN: CESPL-CT-P
P.O. Box 2711
Los Angeles, California 90053-2325

Handcarried bids shall be deposited in Room 1040, 911 Wilshire Blvd., Los Angeles, California, prior to the time and date set for opening of bids or bids may be delivered to Room 1035 immediately prior to bid opening time.

Telegraph Modifications to Bids should be addressed to:

U.S. Army Engineer District, Los Angeles
911 Wilshire Blvd., Room 1040
Los Angeles, California 90017

3. FAR 52.236-27 SITE VISIT (CONSTRUCTION) (FEB 1995), ALTERNATE I (FEB 1995)

(a) The clauses at 52.236-2, Differing Site Conditions, and 52.236-3, Site Investigations and Conditions Affecting the Work, will be included in any contract awarded as a result of this solicitation. Accordingly, offerors or quoters are urged and expected to inspect the site where the work will be performed.
(b) An organized site visit has been schedule for--
Date & Time: 98 MAR 12 at 10:00 a.m.
(c) Participants will meet at--
Location: Vandenberg Resident Office, building M11452, 1174 Iceland, Vandenberg Air Force Base, California. P.O.C. is John Moreno @ (805) 734-4670.

4. DFARS 252.204-7001 COMMERCIAL AND GOVERNMENT ENTITY (CAGE) CODE REPORTING (DEC 1991)

(a) The Offeror is requested to enter its CAGE code on its offer in the block with its name and address. The CAGE code entered must be for that name and address. Enter CAGE before the number.
(b) If the Offeror does not have a CAGE code, it may ask the Contracting Officer to request one from the Defense Logistics Services Center (DLSC). The Contracting Officer will--
(1) Ask the Contractor to complete section B of a DD Form 2051, Request for Assignment of a Commercial and Government Entity (CAGE) Code;
(2) Complete section A and forward the form to DLSC; and
(3) Notify the Contractor of its assigned CAGE code.
(c) Do not delay submission of the offer pending receipt of a CAGE code.

5. SAACONS 52.0209-4501 CONTRACTOR RESPONSIBILITY, PREAWARD SURVEY (JUL 1995)

In order to determine a contractor’s responsibility for purposes of contract award in accordance with FAR Part 9, the contractor is required to provide a statement regarding previous experience and past performance in performing comparable work, information related to the business organization,

financial resources, and/or plant to be used in performing the work (see Attachments, Preaward Survey). The Preaward Survey is attached to the solicitation for information purposes only. It will be required from only the low bidder. After the Bid Opening, the Government will request this information from the low bidder if the low bidder has not had a contract with the Los Angeles District within the last twelve months and the Government will set a due date for its submission. The Preaward Survey is not required as part of the bid package. In order to be determined to be responsible a prospective contractor must:

a. Have adequate financial resources to perform the contract or the ability to obtain them.

b. Be able to comply with the required or proposed delivery or performance schedule, taking into consideration all existing commercial and governmental business commitments.

c. Have a satisfactory performance record. In making the determination of responsibility, the Government Contracting Officer shall consider relevant past performance information. A prospective contractor shall not be determined responsible or nonresponsible solely on the basis of a lack of relevant performance history except when there are special standards set forth in the solicitation which applies to all bidders that must be met in order to receive the award. These special standards may be necessary when unusual expertise or specialized facilities are necessary in the performance of the contract; therefore, in order to be determined to be responsible for that particular contract, the offeror must be able to meet those special standards. A prospective contractor that is or recently has been seriously deficient in contract performance shall be presumed to be nonresponsible unless the Contracting Officer determines that the circumstances were beyond the contractor’s control or that the contractor has taken appropriate corrective action. Other responsibility considerations by the Contracting Officer will include past efforts by the contractor to apply sufficient tenacity and perseverance to perform acceptably, to meet quality requirements of contracts, and the contractor’s past compliance with subcontracting plans (if required) under recent contracts.

d. Have a satisfactory record of integrity and business ethics.

e. Have the necessary organization, experience, accounting and operational controls, and technical skills, or the ability to obtain them (including, as appropriate, such elements as production control procedures, property control systems, quality assurance measures, and safety programs applicable to materials to be produced or services to be performed by the prospective contractor and subcontractors).

f. Have the necessary production, construction, and technical equipment and facilities, or the ability to obtain them.

g. Be otherwise qualified and eligible to receive an award under applicable laws and regulations.

If the contractor or subcontractor does not already have sufficient resources demonstrated in the completed Preaward Survey, acceptable evidence of "the ability to obtain" the required, adequate resources (all of the resources discussed in subparagraphs a, e, and f above) normally consists of a commitment or explicit arrangement that will be in existence at the time of contract award to rent, purchase or otherwise acquire the needed facilities, equipment, other resources, or personnel. See also DFARS 252.219-7009 in this Section.

6. FAR 52.211-14 NOTICE OF PRIORITY RATING FOR NATIONAL DEFENSE USE (SEP 1990)

Any contract awarded as a result of this solicitation will be ( ) DX rated order; (X) DO rated order certified for national defense use under the

Defense Priorities and Allocations System (DPAS) (15 CFR Part 700), and the Contractor will be required to follow all of the requirements of this regulation.

7. DFARS 252.211-7002 AVAILABILITY FOR EXAMINATION OF SPECIFICATIONS, STANDARDS, PLANS, DRAWINGS, DATA ITEM DESCRIPTIONS, AND OTHER PERTINENT DOCUMENTS (DEC 1991)

The specifications, standards, plans, drawings, data item descriptions, and other pertinent documents cited in this solicitation are not available for distribution but may be examined at the following location:

US Army Engineer District, Sacramento
Plan Room
1325 J Street
Sacramento CA 95814-2922

8. DFARS 252.211-7003 BRAND NAME OR EQUAL (DEC 1991)

(a) If items in this solicitation are identified as "brand name or equal," the term is intended to be descriptive not restrictive. The "brand name or equal" description is used to portray the characteristics and level of quality that will satisfy the Government’s needs. The salient physical, functional, and other characteristics which "equal" products must meet are specified in the solicitation.

(b) To be considered for award, offers of "equal" products, including products (other than the "brand name" item) of the brand name manufacturer, must--

(1) Meet the salient physical, functional, and other characteristics specified in this solicitation;

(2) Clearly identify the item by--

(i) Brand name, if any; and

(ii) Make or model number;

(3) Include descriptive literature such as cuts, illustrations, drawings, or a clear reference to previously furnished descriptive data or information available to the Contracting Officer; and

(4) Clearly describe any modifications the Offeror plans to make in a product to make it conform to the solicitation requirements. Mark any descriptive material to clearly show the modifications.

(c) The Contracting Officer will evaluate "equal" products on the basis of information furnished by the Offeror or identified in the offer and reasonably available to the Contracting Officer. The Contracting Officer is not responsible for locating or securing any information not identified in the offer and reasonably available.

(d) Unless the Offeror clearly indicates in the offer that the product being offered is an "equal" product, the Contracting Officer will consider the offer as offering a brand name product referenced in the solicitation.

9. SAACONS 52.0211-4805 AVAILABILITY OF SPECIFICATIONS, STANDARDS AND DESCRIPTIONS (OCT 1992)

(a) Specifications, standards and descriptions cited in this solicitation are available as indicated below:

(1) Unclassified Federal, Military and Other Specifications and Standards (Excluding Commercial) and Data Item Descriptions: Single copies of specifications cited in this solicitation may be obtained by submitting a written request to the supply point listed below. The request must contain the title of the specification, its number, date and applicable amendments. A

telephone order entry system is available with the use of a touch tone telephone. A Customer Number is required to use this system and may be obtained by written request to the address listed below or by telephone (215) 697-2179. In case of urgency, telegraphic requests are acceptable.

Standardization Document
Order Desk, Building 4, Section D
700 Robbins Avenue
Philadelphia PA 19111-5094

Telex Number: 834295
Western Union Number: 710-670-1685
Telephone Number: (215) 697-3321
FAX Number: (215) 697-2978
Telephone Order Entry System (TOES) Numbers: (215) 697-1187 through and including (215) 697-1197

(b) Commercial Specifications, Standards and Descriptions: These specifications, standards and descriptions are not available from Government sources. They may be obtained from the publishers.

(c) The Department of Defense Index of Data Item Descriptions (TD-3) may be ordered on the DD Form 1425. The Department of Defense Index of Specifications and Standards (DODISS) may be purchased from the Superintendent of Documents, U.S. Government Printing Office, Washington, D.C. 20402.

(d) Corps of Engineers Publications: The "CRD" series of Corps of Engineers specifications are available for inspection at this office. Copies can be obtained from the U.S. Army Engineer Waterways Experiment Station, ATTN: Publications Distribution, Information Services Branch, P.O. Box 631, Vicksburg, Mississippi 39180. A copy of the Corps of Engineers manual, EM 385-1-1, entitled "Safety and Health Requirements Manual" will be sent to prospective bidders upon request to the Sacramento District Office.

10. FAR 52.214-1 SOLICITATION DEFINITIONS--SEALED BIDDING (JUL 1987)

"Government" means United States Government.
"Offer" means "bid" in sealed bidding.
"Solicitation" means an invitation for bids in sealed bidding.

11. FAR 52.214-3 AMENDMENTS TO INVITATIONS FOR BIDS (DEC 1989)

(a) If this solicitation is amended, then all terms and conditions which are not modified remain unchanged.

(b) Bidders shall acknowledge receipt of any amendment to this solicitation (1) by signing and returning the amendment, (2) by identifying the amendment number and date in the space provided for this purpose on the form for submitting a bid, (3) by letter or telegram, or (4) by facsimile, if facsimile bids are authorized in the solicitation. The Government must receive the acknowledgment by the time and at the place specified for receipt of bids.

12. FAR 52.214-4 FALSE STATEMENTS IN BIDS (APR 1984)

Bidders must provide full, accurate, and complete information as required by this solicitation and its attachments. The penalty for making false statements in bids is prescribed in 18 U.S.C. 1001.

13. FAR 52.214-5 SUBMISSION OF BIDS (MAR 1997)

(a) Bids and bid modifications shall be submitted in sealed envelopes or packages (unless submitted by electronic means)--

(1) Addressed to the office specified in the solicitation; and
(2) Showing the time and date specified for receipt, the solicitation number, and the name and address of the bidder.
(b) Bidders using commercial carrier services shall ensure that the bid is addressed and marked on the outermost envelope or wrapper as prescribed in subparagraphs (a)(1) and (2) of this provision when delivered to the office specified in the solicitation.
(c) Telegraphic bids will not be considered unless authorized by the solicitation; however, bids may be modified or withdrawn by written or telegraphic notice.
(d) Facsimile bids, modifications, or withdrawals, will not be considered unless authorized by the solicitation.
(e) Bids submitted by electronic commerce shall be considered only if the electronic commerce method was specifically stipulated or permitted by the solicitation.

14. FAR 52.214-6 EXPLANATION TO PROSPECTIVE BIDDERS (APR 1984)

Any prospective bidder desiring an explanation or interpretation of the solicitation, drawings, specifications, etc., must request it in writing soon enough to allow a reply to reach all prospective bidders before the submission of their bids. Oral explanations or instructions given before the award of a contract will not be binding. Any information given a prospective bidder concerning a solicitation will be furnished promptly to all other prospective bidders as an amendment to the solicitation, if that information is necessary in submitting bids or if the lack of it would be prejudicial to other prospective bidders.

15. FAR 52.214-7 LATE SUBMISSIONS, MODIFICATIONS, AND WITHDRAWALS OF BIDS (MAY 1997)

(a) Any bid received at the office designated in the solicitation after the exact time specified for receipt will not be considered unless it is received before award is made and it--
(1) Was sent by registered or certified mail not later than the fifth calendar day before the date specified for receipt of bids (<I>e.g</I>., a bid submitted in response to a solicitation requiring receipt of bids by the 20th of the month must have been mailed by the 15th);
(2) Was sent by mail (or telegram or facsimile, if authorized) or hand-carried (including delivery by a commercial carrier) if it is determined by the Government that the late receipt was due primarily to Government mishandling after receipt at the Government installation;
(3) Was sent by U.S. Postal Service Express Mail Next Day Service-Post Office To Addressee, not later than 5:00 p.m. at the place of mailing two working days prior to the date specified for receipt of bids. The term "working days" excludes weekends and U.S. Federal holidays; or
(4) Was transmitted through an electronic commerce method authorized by the solicitation and was received at the initial point of entry to the Government infrastructure not later than 5:00 p.m. one working day prior to the date specified for receipt of bids.
(b) Any modification or withdrawal of a bid is subject to the same conditions as in paragraph (a) of this provision.
(c) The only acceptable evidence to establish the date of mailing of a late bid, modification, or withdrawal sent either by registered or certified mail is the U.S. or Canadian Postal Service postmark both on the envelope or wrapper and on the original receipt from the U.S. or Canadian Postal Service.

Both postmarks must show a legible date or the bid, modification, or withdrawal shall be processed as if mailed late. "Postmark" means a printed, stamped, or otherwise placed impression (exclusive of a postage meter machine impression) that is readily identifiable without further action as having been supplied and affixed by employees of the U.S. or Canadian Postal Service on the date of mailing. Therefore, bidders should request the postal clerk to place a legible hand cancellation bull’s-eye postmark on both the receipt and the envelope or wrapper.

(d) The only acceptable evidence to establish the time of receipt at the Government installation is the time/date stamp of that installation on the bid wrapper or other documentary evidence of receipt maintained by the installation.

(e) The only acceptable evidence to establish the date of mailing of a late bid, modification, or withdrawal sent by U.S. Postal Service Express Mail Next Day Service-Post Office to Addressee is the date entered by the post office receiving clerk on the "Express Mail Next Day Service-Post Office to Addressee" label and the postmark on the envelope or wrapper and on the original receipt from the U.S. Postal Service. "Postmark" has the same meaning as defined in paragraph (c) of this provision, excluding postmarks of the Canadian Postal Service. Therefore, bidders should request the postal clerk to place a legible hand cancellation bull’s-eye postmark on both the receipt and the envelope or wrapper.

(f) Notwithstanding paragraph (a) of this provision, a late modification of an otherwise successful bid that makes its terms more favorable to the Government will be considered at any time it is received and may be accepted.

(g) Bids may be withdrawn by written notice or telegram (including mailgram) received at any time before the exact time set for receipt of bids. If the solicitation authorizes facsimile bids, bids may be withdrawn via facsimile received at any time before the exact time set for receipt of bids, subject to the conditions specified in the provision entitled "Facsimile Bids." A bid may be withdrawn in per- son by a bidder or its authorized representative if, before the exact time set for receipt of bids, the identity of the per- son requesting withdrawal is established and the person signs a receipt for the bid.

(h) If an emergency or unanticipated event interrupts normal Government processes so as to cause postponement of the scheduled bid opening, and urgent Government requirements preclude amendment of the solicitation or other notice of an extension of the opening date, the time specified for receipt of bids will be deemed to be extended to the same time of day specified in the solicitation on the first work day on which normal Government processes resume.

16. FAR 52.214-18 PREPARATION OF BIDS--CONSTRUCTION (APR 1984)

(a) Bids must be (1) submitted on the forms furnished by the Government or on copies of those forms, and (2) manually signed. The person signing a bid must initial each erasure or change appearing on any bid form.

(b) The bid form may require bidders to submit bid prices for one or more items on various bases, including--

(1) Lump sum bidding;

(2) Alternate prices;

(3) Units of construction; or

(4) Any combination of subparagraphs (1) through (3) above.

(c) If the solicitation requires bidding on all items, failure to do so will disqualify the bid. If bidding on all items is not required, bidders should insert the words "no bid" in the space provided for any item on which no price is submitted.

(d) Alternate bids will not be considered unless this solicitation authorizes their submission.

17. FAR 52.214-19 CONTRACT AWARD--SEALED BIDDING--CONSTRUCTION (AUG 1996)

(a) The Government will evaluate bids in response to this solicitation without discussions and will award a contract to the responsible bidder whose bid, conforming to the solicitation, will be most advantageous to the Government, considering only price and the price-related factors specified elsewhere in the solicitation.

(b) The Government may reject any or all bids, and waive informalities or minor irregularities in bids received.

(c) The Government may accept any item or combination of items, unless doing so is precluded by a restrictive limitation in the solicitation or the bid.

(d) The Government may reject a bid as nonresponsive if the prices bid are materially unbalanced between line items or subline items. A bid is materially unbalanced when it is based on prices significantly less than cost for some work and prices which are significantly overstated in relation to cost for other work, and if there is a reasonable doubt that the bid will result in the lowest overall cost to the Government even though it may be the low evaluated bid, or if it is so unbalanced as to be tantamount to allowing an advance payment.

18. FAR 52.214-34 SUBMISSION OF OFFERS IN THE ENGLISH LANGUAGE (APR 1991) (APPLICABLE IF DFARS 252.225-7007 OR 252.225-7036 OR FAR 52.225-15 ARE APPLICABLE - SEE SECTION 00700)

Offers submitted in response to this solicitation shall be in the English language. Offers received in other than English shall be rejected.

19. FAR 52.214-35 SUBMISSION OF OFFERS IN U.S. CURRENCY (APR 1991) (APPLICABLE IF DFARS 252.225-7007 OR 252.225-7036 OR FAR 52.225-15 ARE APPLICABLE - SEE SECTION 00700)

Offers submitted in response to this solicitation shall be in terms of U.S. dollars. Offers received in other than U.S. dollars shall be rejected.

20. SAACONS 52.0214-4583 TELEGRAPHIC BIDS/OFFERS (APR 1992)

TELEGRAPHIC BIDS/OFFERS ARE NOT ACCEPTABLE.

However, bids/offers may be modified or withdrawn by written or telegraphic notice. Any telegram to modify or withdraw a bid/offer sent to this office must be received in the office designated in the Invitation for Bids/Request for Proposal (IFB/RFP) for receipt of bids/offers not later than the exact date and time set for bid opening/receipt of proposals. A telegraphic modification or withdrawal of a bid/offer received in such office by telephone from the receiving telegraph office not later than the exact date and time set for bid opening/receipt of proposals shall be considered. However, the telephone message shall be confirmed by the telegraph company by sending a copy of the written telegram that formed the basis for the telephone call. The written telegram shall be sealed in an envelope by a proper official and sent to the office designated in the IFB/RFP for receipt of bids/offers. The official shall write on the envelope (1) the date and time of receipt and by whom, and (2) the number of the IFB/RFP, and shall sign the envelope. The bidder/offeror is responsible to inform the telegraph company of these

requirements. No one from this office will be dispatched to the local telegraph office to pick up any telegram for any reason.

21. SAACONS 52.0214-4584 FACSIMILE BIDS/OFFERS (APR 1992)

Facsimile bids/offers, modifications thereto, or cancellations of bids/offers will not be accepted.

22. FAR 52.216-1 TYPE OF CONTRACT (APR 1984)

The Government contemplates award of a firm, fixed-price contract resulting from this solicitation.

23. SAACONS 52.0219-4581 PREPARATION OF SUBCONTRACTING PLAN (APR 1994)

(a) See FAR 52.219-9, Section 00700, of this solicitation. Located in the Attachments Section of this solicitation is a sample Subcontracting Plan which will aid the Contractor in preparing a Subcontracting Plan in accordance with FAR 52.219-9(d)(1) through (d)(11). Subcontracting Plans will be developed considering only the subcontracts actually to be awarded. Subcontracting Plans are required only from large business firms if the contract price is over $1 million; they are not required from small business firms regardless of the contract price.

(b) The sample Subcontracting Plan is attached to this solicitation for information purposes. A Subcontracting Plan will be required only from the low bidder if the low bidder is a large business and the low bid is over $1 million. The Subcontracting Plan is not required from the low bidder until after the Bid Opening; it is not required as part of the bid package. After the Bid Opening, if the selected bidder fails to submit an acceptable plan within the time prescribed by the Contracting Officer, the bidder will be ineligible for award. Review of the Subcontracting Plan by the Government will be in accordance with FAR 19.705-4.

(c) A Subcontracting Plan which proposes goals less than the recommended goals below must contain support, in writing, for the lesser goals and discuss the Contractor’s good faith effort to meet the recommended goals.

(d) In accordance with FAR 19.704 if the contract contains options, the cumulative value of the basic contract and all options is considered in determining whether a Subcontracting Plan is necessary. If a plan is necessary, the Subcontracting Plan shall contain separate parts, one for the basic contract and one for each option. It is necessary to address planned subcontracting dollars and percentages of total to be awarded to small; small, disadvantaged; women-owned small; HBCU/MIs; and qualified nonprofit agencies for the blind and other severely disabled separately for the basic contract period and each option year. All other parts of the Subcontracting Plan only need to be addressed once.

(e) Subcontracts awarded to small, disadvantaged businesses; women-owned small businesses; HBCU/MIs; and qualified nonprofit agencies for the blind and other severely disabled count toward the overall small business goal. HBCU/MIs are counted as a subset of the small, disadvantaged goal. The Corps of Engineers has not been assigned a set goal for HBCU/MIs or qualified nonprofit agencies for the blind and other severely disabled.

(f) Qualified nonprofit agencies for the blind and other severely disabled that have been approved by the Committee for Purchase from People Who Are Blind or Severely Disabled under the Javits-Wagner-O’Day Act (41 U.S.C. 46-48) are eligible as a result of Section 9077 of Pub. L. 102-395 and subsequent Appropriation Acts and Section 808 of Pub. L. 102-484 and 804 of Pub. L. 103-337 through September 30 1997 to participate in the program. Under this authority subcontracts awarded to such entities may be counted

toward the prime contractor's small business subcontracting goal through fiscal year 1997.

(g) Contact - Mr. Daniel (213)452-3938, Deputy for Small Business, with questions on the Subcontracting Plan requirements and further instructions on submission of Standard Forms 294 and 295 as required by FAR 52.219-9. These forms with clarifying instructions will be furnished by the Deputy for Small Business to the Contractor's Subcontracting Plan Administrator after contract award.

(h) The accepted Subcontracting Plan will be incorporated into and made a material part of the contract.

24. FAR 52.222-23 NOTICE OF REQUIREMENT FOR AFFIRMATIVE ACTION TO ENSURE EQUAL EMPLOYMENT OPPORTUNITY (APR 1984)

(a) The offeror's attention is called to the Equal Opportunity clause and the Affirmative Action Compliance Requirements for Construction clause of this solicitation.

(b) The goals for minority and female participation, expressed in percentage terms for the Contractor's aggregate workforce in each trade on all construction work in the covered area, are as follows:

Goals for minority participation for each trade	Goals for female participation for each trade
19.7%	6.9%

These goals are applicable to all the Contractor's construction work performed in the covered area. If the Contractor performs construction work in a geographical area located outside of the covered area, the Contractor shall apply the goals established for the geographical area where the work is actually performed. Goals are published periodically in the Federal Register in notice form, and these notices may be obtained from any Office of Federal Contract Compliance Programs office.

(c) The Contractor's compliance with Executive Order 11246, as amended, and the regulations in 41 CFR 60-4 shall be based on (1) its implementation of the Equal Opportunity clause, (2) specific affirmative action obligations required by the clause entitled "Affirmative Action Compliance Requirements for Construction," and (3) its efforts to meet the goals. The hours of minority and female employment and training must be substantially uniform throughout the length of the contract, and in each trade. The Contractor shall make a good faith effort to employ minorities and women evenly on each of its projects. The transfer of minority or female employees or trainees from Contractor to Contractor, or from project to project, for the sole purpose of meeting the Contractor's goals shall be a violation of the contract, Executive Order 11246, as amended, and the regulations in 41 CFR 60-4. Compliance with the goals will be measured against the total work hours performed.

(d) The Contractor shall provide written notification to the Director, Office of Federal Contract Compliance Programs, within 10 working days following award of any construction subcontract in excess of $10,000 at any tier for construction work under the contract resulting from this solicitation. The notification shall list the--

(1) Name, address, and telephone number of the subcontractor;

(2) Employer's identification number of the subcontractor;

(3) Estimated dollar amount of the subcontract;

(4) Estimated starting and completion dates of the subcontract; and

(5) Geographical area in which the subcontract is to be performed.

(e) As used in this Notice, and in any contract resulting from this solicitation, the "covered area" is Santa Barbara county, California.

25. SAACONS 52.0228-4504 PERFORMANCE AND PAYMENT BONDS (AUG 1991)

The bidder/offeror whose bid/offer is accepted will, within the time established in the bid, enter into a written contract with the Government and furnish performance and payment bonds on Government Standard Forms in the amounts indicated.

Within ten (10) calendar days after award and prior to Notice to Proceed the contractor shall furnish two bonds, each with good and sufficient surety or sureties acceptable to the Government, namely a performance bond (Standard Form 25) and a payment bond (Standard Form 25-A). The penal sum of such bonds will be as follows:

a. Performance Bond. The penal amount of performance bond shall be one hundred percent (100%) of the original contract price.

b. Payment Bond. The penal amount of payment bond shall equal (i)fifty percent (50%) of the contract price when the contract price is $1,000,000 or less; (ii) forty percent (40%) of the contract price when the contract price is in excess of $1,000,000 but not more than $5,000,000; (iii) $2,500,000 when the contract price is more than $5,000,000.

Any bonds furnished will be furnished by the contractor to the Government prior to Notice to Proceed and commencement of contract performance.

26. SAACONS 52.0228-4506 INDIVIDUAL SURETIES IN SUPPORT OF BID BONDS (AUG 1991)

Bidders/offerors utilizing individual sureties in support of a bid bond shall include a Standard Form (SF) 28 (Affidavit of Individual Surety), accompanied by a pledge of acceptable assets from each person acting as an individual surety, and include these with the SF 24 (Bid Bond), and the bid itself (see clause titled "Pledges of Assets," FAR 52.228-11).

Pledges of acceptable assets shall be in the form of (1) evidence of an escrow account and/or (2) a recorded lien on real estate. If this is an IFB, failure to provide pledges of acceptable assets, with the bid, in the specified form, accompanied by a properly executed SF 24 and SF 28, will render the bidder nonresponsible and thus ineligible for award. If this is an RFP, failure to provide required documentation described herein may cause the offeror to be deemed "unacceptable".

27. SAACONS 52.228-4507 BID GUARANTEE FORM AND AMOUNT (JAN 1993)

When bids/proposals exceed $25,000, the offeror shall furnish a separate bid guarantee in accordance with the solicitation provision titled "Bid Guarantee", FAR 52.228-1. In accordance with FAR 28.101-2 the bid guarantee amount shall be at least 20 percent of the "bid price" but shall not exceed $3 million. When the penal sum is expressed as a percentage, a maximum dollar limitation may be stated. If there are option line items on the Pricing Schedule (Section 00010), the term "bid price" is hereby defined as the total bid not to include any amount for line items designated as "options". In bids/proposals that contain "additives", the "bid price" is defined as the total of all bid items including additive line items. FAR 28.106-1 states that a Standard Form (SF) 24 shall be used for the bid bond. In accordance with FAR 28.202(a)(1), corporate sureties utilized must appear on the list contained in the Department of Treasury Circular 570 titled "Companies Holding Certificates of Authority as Acceptable Sureties on Federal Bonds and Acceptable Reinsuring Companies."

28. DFARS 252.228-7004 BONDS OR OTHER SECURITY (DEC 1991)

(a) Offerors shall furnish a bid guarantee in the amount of 20% of bid/offer with their bids/offers. The offeror receiving notice of award shall furnish--

(1) A performance bond in the penal amount of 100% of contract price; and

(2) Payment in full of any sum due the Government.

(b) The Contractor shall furnish the performance bond to the Contracting Officer within ten (10) days after receipt of the notice of award. The Contracting Officer will not issue the notice to proceed until receipt of an acceptable performance bond and payment of any sum due the Government.

(c) Bonds supported by sureties whose names appear on the list contained in Treasury Department Circular 570 are acceptable. Performance bonds from individual sureties are acceptable if each person acting as a surety provides a SF 28, Affidavit of Individual Surety, and a pledge of assets acceptable to the Contracting Officer.

29. FAR 52.233-2 SERVICE OF PROTEST (AUG 1996)

(a) Protests, as defined in section 33.101 of the Federal Acquisition Regulation, that are filed directly with an agency, and copies of any protests that are filed with the General Accounting Office (GAO), shall be served on the Contracting Officer (addressed as follows) by obtaining written and dated acknowledgment of receipt from:

U.S. Army Engineer District, Los Angeles
ATTN: Contracting Division
911 Wilshire Blvd., Room 1040
Los Angeles, California 90017

(b) The copy of any protest shall be received in the office designated above within one day of filing a protest with the GAO.

30. SAACONS 52.0236-4507 ACCEPTANCE OF OFFERS (AUG 1991)

A written award or acceptance of an offer, mailed or otherwise furnished to the successful offeror within the time for acceptance specified in the offer, shall result in a binding contract without further action by either party.

31. FAR 52.252-3 ALTERATIONS IN SOLICITATION (APR 1984)

Portions of this solicitation are altered as follows: N/A

32. FAR 52.252-5 AUTHORIZED DEVIATIONS IN PROVISIONS (APR 1984)

(a) The use in this solicitation of any Federal Acquisition Regulation (48 CFR Chapter 1) provision with an authorized deviation is indicated by the addition of "(DEVIATION)" after the date of the provision.

(b) The use in this solicitation of any (48 CFR Chapter 2) provision with an authorized deviation is indicated by the addition of "(DEVIATION)" after the name of the regulation.

EVALUATION CRITERIA FOR AWARD:

33. SAACONS 52.0214-4503 EVALUATION FOR AWARD (JAN 1991)

The Government contemplates award of one contract to the responsive, responsible bidder who submits the low bid for the total of the following items in Pricing Schedule:

All line items listed in Pricing Schedule.

If the solicitation’s Pricing Schedule contains options, see evaluation of options clause below for information on the procedure used by the Government to determine "low bid".

34. FAR 52.217-5 EVALUATION OF OPTIONS (JUL 1990)

Except when it is determined in accordance with FAR 17.206(b) not to be in the Government’s best interests, the Government will evaluate offers for award purposes by adding the total price for all options to the total price for the basic requirement. Evaluation of options will not obligate the Government to exercise the option(s)

END OF SECTION

SECTION 00600

REPRESENTATIONS, CERTIFICATIONS AND OTHER STATEMENTS OF BIDDERS/OFFERORS

SECTION 00600

REPRESENTATIONS, CERTIFICATIONS
AND OTHER STATEMENTS OF BIDDERS/OFFERORS

INDEX

1.	SAACONS 52.0201.4801	SUBMITTAL INFORMATION (NOV 1993)
2.	FAR 52.203-2	CERTIFICATE OF INDEPENDENT PRICE DETERMINATION (APR 1985)
3.	FAR 52.203-11	CERTIFICATION AND DISCLOSURE REGARDING PAYMENTS TO INFLUENCE CERTAIN FEDERAL TRANSACTIONS (APR 1991)
4.	FAR 52.204-3	TAXPAYER IDENTIFICATION (JUN 1997)
5.	FAR 52.204-5	WOMEN-OWNED BUSINESS (OCT 1995)
6.	FAR 52.209-5	CERTIFICATION REGARDING DEBARMENT, SUSPENSION, PROPOSED DEBARMENT, AND OTHER RESPONSIBILITY MATTERS (MAR 1996)
7.	DFARS 252.209-7001	DISCLOSURE OF OWNERSHIP OR CONTROL BY THE GOVERNMENT OF A TERRORIST COUNTRY (SEP 1994)
8.	FAR 52.214-2	TYPE OF BUSINESS ORGANIZATION--SEALED BIDDING (JUL 1987)
9.	FAR 52.214-17	AFFILIATED BIDDERS (APR 1984)
10.	FAR 52.219-1	SMALL BUSINESS PROGRAM REPRESENTATION (JAN 1997)
11.	FAR 52.219-2	EQUAL LOW BIDS (OCT 1995)
12.	FAR 52.219-19	SMALL BUSINESS CONCERN REPRESENTATION FOR THE SMALL BUSINESS COMPETITIVENESS DEMONSTRATION PROGRAM (JAN 1997)
13.	DFARS 252.219-7000	SMALL DISADVANTAGED BUSINESS CONCERN REPRESENTATION (DOD CONTRACTS (JUN 1997)
14.	FAR 52.222-21	CERTIFICATION OF NONSEGREGATED FACILITIES (APR 1984)
15.	FAR 52.222-22	PREVIOUS CONTRACTS AND COMPLIANCE REPORTS (APR 1984)
16.	FAR 52.223-1	CLEAN AIR AND WATER CERTIFICATION (APR 1984)
17.	FAR 52.223-3	HAZARDOUS MATERIAL IDENTIFICATION AND MATERIAL SAFETY DATA (JAN 1997)
18.	FAR 52.223-5	POLLUTION PREVENTION AND RIGHT-TO-KNOW INFORMATION (MAR 1997)
19.	FAR 52.223-13	CERTIFICATION OF TOXIC CHEMICAL RELEASE REPORTING (OCT 1996)
20.	DFARS 252.223-7001	HAZARD WARNING LABELS (DEC 1991)
21.	DFARS 252.225-7006	BUY AMERICAN ACT--TRADE AGREEMENTS--BALANCE OF PAYMENTS PROGRAM CERTIFICATE (JUN 1997)
22.	DFARS 252.225-7035	BUY AMERICAN ACT--NORTH AMERICAN FREE TRADE AGREEMENT IMPLEMENTATION ACT--BALANCE OF PAYMENTS PROGRAM CERTIFICATE (MAY 1995)
23.	DFARS 252.247-7022	REPRESENTATION OF EXTENT OF TRANSPORTATION BY SEA (AUG 1992)

SECTION 00600

REPRESENTATIONS, CERTIFICATIONS
AND OTHER STATEMENTS OF BIDDERS/OFFERORS

1. SAACONS 52.0201.4801 SUBMITTAL INFORMATION (NOV 1993)

Solicitation Number: _____

Offeror's Name, Address, Telephone Number, and Fax Number:

_____

_____

_____

_____

_____
Name of Person to Contact Telephone Number

_____
Fax Number

Commercial & Government Entity (CAGE) Code, if known (see Section 00100):

_____

DUNS Number, if known:

_____

2. FAR 52.203-2 CERTIFICATE OF INDEPENDENT PRICE DETERMINATION (APR 1985)

(a) The offeror certifies that--

(1) The prices in this offer have been arrived at independently, without, for the purpose of restricting competition, any consultation, communication, or agreement with any other offeror or competitor relating to (i) those prices, (ii) the intention to submit an offer, or (iii) the methods or factors used to calculate the prices offered;

(2) The prices in this offer have not been and will not be knowingly disclosed by the offeror, directly or indirectly, to any other offeror or competitor before bid opening (in the case of a sealed bid solicitation) or contract award (in the case of a negotiated solicitation) unless otherwise required by law; and

(3) No attempt has been made or will be made by the offeror to induce any other concern to submit or not to submit an offer for the purpose of restricting competition.

(b) Each signature on the offer is considered to be a certification by the signatory that the signatory--

(1) Is the person in the offeror's organization responsible for determining the prices being offered in this bid or proposal, and that the signatory has not participated and will not participate in any action contrary to subparagraphs (a)(1) through (a)(3) above; or

(2)(i) Has been authorized, in writing, to act as agent for the following principals in certifying that those principals have not participated, and will not participate in any action contrary to subparagraphs (a)(1) through (a)(3) above_____
(insert full name of person(s) in the offeror's organization responsible for determining the prices offered in this bid or proposal, and the title of his or her position in the offeror's organization);

(ii) As an authorized agent, does certify that the principals named in subdivision (b)(2)(i) above have not participated, and will not participate, in any action contrary to subparagraphs (a)(1) through (a)(3) above; and

(iii) As an agent, has not personally participated, and will not participate, in any action contrary to subparagraphs (a)(1) through (a)(3) above.

(c) If the offeror deletes or modifies subparagraph (a)(2) above, the offeror must furnish with its offer a signed statement setting forth in detail the circumstances of the disclosure.

3. FAR 52.203-11 CERTIFICATION AND DISCLOSURE REGARDING PAYMENTS TO INFLUENCE CERTAIN FEDERAL TRANSACTIONS (APR 1991)

(a) The definitions and prohibitions contained in the clause, at FAR 52.203-12, Limitation on Payments to Influence Certain Federal Transactions, included in this solicitation, are hereby incorporated by reference in paragraph (b) of this certification.

(b) The offeror, by signing its offer, hereby certifies to the best of his or her knowledge and belief that on or after December 23, 1989,--

(1) No Federal appropriated funds have been paid or will be paid to any person for influencing or attempting to influence an officer or employee of any agency, a Member of Congress, an officer or employee of Congress, or an employee of a Member of Congress on his or her behalf in connection with the awarding of any Federal contract, the making of any Federal grant, the making of any Federal loan, the entering into of any cooperative agreement, and the extension, continuation, renewal, amendment or modification of any Federal contract, grant, loan, or cooperative agreement;

(2) If any funds other than Federal appropriated funds (including profit or fee received under a covered Federal transaction) have been paid, or will be paid, to any person for influencing or attempting to influence an officer or employee of any agency, a Member of Congress, an officer or employee of Congress, or an employee of a Member of Congress on his or her behalf in connection with this solicitation, the offeror shall complete and submit, with its offer, OMB standard form LLL, Disclosure of Lobbying Activities, to the Contracting Officer; and

(3) He or she will include the language of this certification in all subcontract awards at any tier and require that all recipients of subcontract awards in excess of $100,000 shall certify and disclose accordingly.

(c) Submission of this certification and disclosure is a prerequisite for making or entering into this contract imposed by section 1352, title 31, United States Code. Any person who makes an expenditure prohibited under this provision or who fails to file or amend the disclosure form to be filed or amended by this provision, shall be subject to a civil penalty of not less than $10,000, and not more than $100,000, for each such failure.

4. FAR 52.204-3 TAXPAYER IDENTIFICATION (JUN 1997)

(a) Definitions.

"Common parent," as used in this solicitation provision, means that corporate entity that owns or controls an affiliated group of corporations that files its Federal income tax returns on a consolidated basis, and of which the offeror is a member.

"Corporate status," as used in this solicitation provision, means a designation as to whether the offeror is a corporate entity, an unincorporated entity (e.g., sole proprietorship or partnership), or a corporation providing medical and health care services.

"Taxpayer Identification Number (TIN)," as used in this solicitation provision, means the number required by the IRS to be used by the offeror in reporting income tax and other returns.

(b) All offerors are required to submit the information required in paragraphs (c) through (e) of this solicitation provision in order to comply with reporting requirements of 26 U.S.C. 6041, 6041A, and 6050M and implementing regulations issued by the Internal Revenue Service (IRS). If the resulting contract is subject to the reporting requirements described in FAR 4.903, the failure or refusal by the offeror to furnish the information may result in a 31 percent reduction of payments otherwise due under the contract.

(c) Taxpayer Identification Number (TIN).

/_/ TIN: _____.

/_/ TIN has been applied for.

/_/ TIN is not required because:

/_/ Offeror is a nonresident alien, foreign corporation, or foreign partnership that does not have income effectively connected with the conduct of a trade or business in the U.S. and does not have an office or place of business or a fiscal paying agent in the U.S.;

/_/ Offeror is an agency or instrumentality of a foreign government;

/_/ Offeror is an agency or instrumentality of a Federal, state, or local government;

/_/ Other. State basis. _____

(d) Corporate Status.

/_/ Corporation providing medical and health care services, or engaged in the billing and collecting of payments for such services;

/_/ Other corporate entity;

/_/ Not a corporate entity;

/_/ Sole proprietorship

/_/ Partnership

/_/ Hospital or extended care facility described in 26 CFR 501(c)(3) that is exempt from taxation under 26 CFR 501(a).

(e) Common Parent.

/_/ Offeror is not owned or controlled by a common parent as defined in paragraph (a) of this clause.

/_/ Name and TIN of common parent:

Name _____

TIN _____

5. FAR 52.204-5 WOMEN-OWNED BUSINESS (OCT 1995)

(a) Representation. The offeror represents that it ( ) is, ( ) is not a women-owned business concern.

(b) Definition. "Women-owned business concern," as used in this provision, means a concern which is at least 51 percent owned by o ne or more women; or in the case of any publicly owned business, at least 51 percent of the stock of which is owned by one or more women; and whose management and daily business operations are controlled by one or more women.

6. FAR 52.209-5 CERTIFICATION REGARDING DEBARMENT, SUSPENSION, PROPOSED DEBARMENT, AND OTHER RESPONSIBILITY MATTERS (MAR 1996)

(a)(1) The Offeror certifies, to the best of its knowledge and belief, that--

(i) The Offeror and/or any of its Principals--

(A) Are / / are not / / presently debarred, suspended, proposed for debarment, or declared ineligible for the award of contracts by any Federal agency;

(B) Have / / have not / /, within a three-year period preceding this offer, been convicted of or had a civil judgment rendered against them for: commission of fraud or a criminal offense in connection with obtaining, attempting to obtain, or performing a public (Federal, state, or local) contract or subcontract; violation of Federal or state antitrust statutes relating to the submission of offers; or commission of embezzlement, theft, forgery, bribery, falsification or destruction of records, making false statements, or receiving stolen property; and

(C) Are / / are not / / presently indicted for, or otherwise criminally or civilly charged by a governmental entity with, commission of any of the offenses enumerated in subdivision (a)(1)(i)(B) of this provision.

(ii) The Offeror has / / has not / /, within a three-year period preceding this offer, had one or more contracts terminated for default by any Federal agency.

(2) "Principals," for the purposes of this certification, means officers; directors; owners; partners; and, persons having primary management or supervisory responsibilities within a business entity (e.g., general manager; plant manager; head of a subsidiary, division, or business segment, and similar positions).

THIS CERTIFICATION CONCERNS A MATTER WITHIN THE JURISDICTION OF AN AGENCY OF THE UNITED STATES AND THE MAKING OF A FALSE, FICTITIOUS, OR FRAUDULENT CERTIFICATION MAY RENDER THE MAKER SUBJECT TO PROSECUTION UNDER SECTION 1001, TITLE 18, UNITED STATES CODE.

(b) The Offeror shall provide immediate written notice to the Contracting Officer if, at any time prior to contract award, the Offeror learns that its certification was erroneous when submitted or has become erroneous by reason of changed circumstances.

(c) A certification that any of the items in paragraph (a) of this provision exists will not necessarily result in withholding of an award under this solicitation. However, the certification will be considered in connection with a determination of the Offeror’s responsibility. Failure of the Offeror to furnish a certification or provide such additional information as requested by the Contracting Officer may render the Offeror nonresponsible.

(d) Nothing contained in the foregoing shall be construed to require establishment of a system of records in order to render, in good faith, the certification required by paragraph (a) of this provision. The knowledge and information of an Offeror is not required to exceed that which is normally possessed by a prudent person in the ordinary course of business dealings.

(e) The certification in paragraph (a) of this provision is a material representation of fact upon which reliance was placed when making award. If it is later determined that the Offeror knowingly rendered an erroneous certification, in addition to other remedies available to the Government, the Contracting Officer may terminate the contract resulting from this solicitation for default.

7. DFARS 252.209-7001 DISCLOSURE OF OWNERSHIP OR CONTROL BY THE GOVERNMENT OF A TERRORIST COUNTRY (SEP 1994)

(a) Definitions.

As used in this provision--

(1) "Government of a terrorist country" includes the states and the government of a terrorist country, as well as any political subdivision, agency, or instrumentality thereof.

(2) "Terrorist country" means a country determined by the Secretary of State, under section 6(j)(1)(A) of the Export Administration Act of 1979 (50 U.S.C. App. 2405(j)(i)(A)), to be a country the government of which has repeatedly provided support for actions of international terrorism. As of the date of this provision, terrorist countries include: Cuba, Iran, Iraq, Libya, North Korea, Sudan, and Syria.

(3) "Significant interest" means--

(i) Ownership of or beneficial interest in 5 percent or more of the firm's or subsidiary's securities. Beneficial interest includes holding 5 percent or more of any class of the firm's securities in "nominee shares," "street names," or some other method of holding securities that does not disclose the beneficial owner;

(ii) Holding a management position in the firm, such as a director or officer;

(iii) Ability to control or influence the election, appointment, or tenure of directors or officers in the firm;

(iv) Ownership of 10 percent or more of the assets of a firm such as equipment, buildings, real estate, or other tangible assets of the firm; or

(v) Holding 50 percent or more of the indebtedness of a firm.

(b) Prohibition on award.

In accordance with 10 U.S.C. 2327, no contract may be awarded to a firm or a subsidiary of a firm if the government of a terrorist country has a significant interest in the firm or subsidiary, unless a waiver is granted by the Secretary of Defense.

(c) Disclosure.

If the government of a terrorist country has a significant interest in the Offeror or a subsidiary of the Offeror, the Offeror shall disclose such interest in an attachment to its offer. If the Offeror is a subsidiary, if shall also disclose any significant interest the government of a terrorist country has in any firm that owns or controls the subsidiary. The disclosure shall include--

(1) Identification of each government holding a significant interest; and

(2) A description of the significant interest held by each Government.

8. FAR 52.214-2 TYPE OF BUSINESS ORGANIZATION--SEALED BIDDING (JUL 1987)

The bidder, by checking the applicable box, represents that--

(a) It operates as /_/ a corporation incorporated under the laws of the State of _____, /_/ an individual, /_/ a partnership, /_/ a nonprofit organization, or /_/ a joint venture; or

(b) If the bidder is a foreign entity, it operates as /_/ an individual, /_/ a partnership, /_/ a nonprofit organization, /_/ a joint venture, or /_/ a corporation, registered for business in _____. (country)

9. FAR 52.214-17 AFFILIATED BIDDERS (APR 1984)

(a) Business concerns are affiliates of each other when, either directly or indirectly, (1) one concern controls or has the power to control the other, or (2) a third party controls or has the power to control both.

(b) Each bidder shall submit with its bid an affidavit stating that it has no affiliates, or containing the following information:

(1) The names and addresses of all affiliates of the bidder.

(2) The names and addresses of all persons and concerns exercising control or ownership of the bidder and any or all of its affiliates, and whether they exercise such control or ownership as common officers, directors, stockholders holding controlling interest, or otherwise.

10. FAR 52.219-1 SMALL BUSINESS PROGRAM REPRESENTATION (JAN 1997)

(a)(1) The standard industrial classification (SIC) code for this acquisition is 1542 - General Contractors-Nonresidential Buildings, Other Than Industrial Buildings and Warehouses.

(2) The small business size standard is $17,000,000

(3) The small business size standard for a concern which submits an offer in its own name, other than on a construction or service contract, but which proposes to furnish a product which it did not itself manufacture, is 500 employees.

(b) Representations. (1) The offeror represents as part of its offer that it / / is, / / is not a small business concern.

(2) (Complete only if offeror represented itself as a small business concern in block (b)(1) of this section.) The offeror represents as part of its offer that it / / is, / / is not a women-owned small business concern.

(c) Definitions. “Joint venture,” for purposes of a small disadvantaged business (SDB) set-aside or price evaluation preference (as prescribed at 13 CFR 124.321), is a concern that is owned and controlled by one or more socially and economically disadvantaged individuals entering into a joint venture agreement with one or more business concerns and is considered to be affiliated for size purposes with such other concern(s). The combined annual receipts or employees of the concerns entering into the joint venture must meet the applicable size standard corresponding to the SIC code designated for the contract. The majority of the venture’s earnings must accrue directly to the socially and economically disadvantaged individuals in the SDB concerns(s) in the joint venture. The percentage of the ownership involvement in a joint venture by disadvantaged individuals must be at least 51 percent.

"Small business concern," as used in this provision, means a concern, including its affiliates, that is independently owned and operated, not dominant in the field of operation in which it is bidding on Government contracts, and qualified as a small business under the criteria in 13 CFR Part 121 and the size standard in paragraph (a) of this provision.

"Small disadvantaged business concern," as used in this provision, means a small business concern that (1) is at least 51 percent unconditionally owned by one or more individuals who are both socially and economically disadvantaged, or a publicly owned business having at least 51 percent of its stock unconditionally owned by one or more socially and economically disadvantaged individuals, and (2) has its management and daily business controlled by one or more such individuals. This term also means a small business concern that is at least 51 percent unconditionally owned by an economically disadvantaged Indian tribe or Native Hawaiian Organization, or a publicly owned business having at least 51 percent of its stock unconditionally owned by one or more of these entities, which has its management and daily business controlled by members of an economically disadvantaged Indian tribe or Native Hawaiian Organization, and which meets the requirements of 13 CFR Part 124.

"Women-owned small business concern," as used in this provision, means a small business concern--

(1) Which is at least 51 percent owned by one or more women or, in the case of any publicly owned business, at least 51 percent of the stock of which is owned by one or more women; and

(2) Whose management and daily business operations are controlled by one or more women.

(d) Notice. (1) If this solicitation is for supplies and has been set aside, in whole or in part, for small business concerns, then the clause in this solicitation providing notice of the set-aside contains restrictions on the source of the end items to be furnished.

(2) Under 15 U.S.C. 645(d), any person who misrepresents a firm's status as a small or small disadvantaged business concern in order to obtain a contract to be awarded under the preference programs established pursuant to sections 8(a), 8(d), 9, or 15 of the Small Business Act or any other provision of Federal law that specifically references section 8(d) for a definition of program eligibility, shall--

(i) Be punished by imposition of a fine, imprisonment, or both;

(ii) Be subject to administrative remedies, including suspension and debarment; and

(iii) Be ineligible for participation in programs conducted under the authority of the Act.

11. FAR 52.219-2 EQUAL LOW BIDS (OCT 1995)

(a) This provision applies to small business concerns only.

(b) The bidder's status as a labor surplus area (LSA) concern may affect entitlement to award in case of tie bids. If the bidder wishes to be considered for this priority, the bidder must identify, in the following space, the LSA in which the costs to be incurred on account of manufacturing or production (by the bidder of the first-tier subcontractors) amount to more than 50 percent of the contract price.

_____ _____

_____ _____

(c) Failure to identify the labor surplus areas as specified in paragraph (b) of this provision will preclude the bidder from receiving priority consideration. If the bidder is awarded a contract as a result of receiving priority consideration under this provision and would not have otherwise received award, the bidder shall perform the contract or cause the contract to be performed in accordance with the obligations of an LSA concern.

12. FAR 52.219-19 SMALL BUSINESS CONCERN REPRESENTATION FOR THE SMALL BUSINESS COMPETITIVENESS DEMONSTRATION PROGRAM (JAN 1997)

(a) Definition.

"Emerging small business" as used in this solicitation, means a small business concern whose size is no greater than 50 percent of the numerical size standard applicable to the standard industrial classification code assigned to a contracting opportunity.

(b) (Complete only if the Offeror has represented itself under the provision at 52.219-1 as a small business concern under the size standards of this solicitation.)

The Offeror represents and certifies as part of its offer that it /__/ is, /__/ is not an emerging small business.

(c) (Complete only if the Offeror is a small business or an emerging small business, indicating its size range.)

Offeror's number of employees for the past 12 months (check this column if size standard stated in solicitation is expressed in terms of number of employees) or Offeror's average annual gross revenue for the last 3 fiscal years (check this column if size standard stated in solicitation is expressed in terms of annual receipts). (Check one of the following.)

No. of Employees	Avg. Annual Gross Revenues
____50 or fewer	_____$1 million or less
____51-100	_____$1,000,001-$2 million
____101-250	_____$2,000,001-$3.5 million
____251-500	_____$3,500,001-$5 million
____501-750	_____$5,000,001-$10 million
____751-1,000	_____$10,000,001-$17 million
____Over 1,000	_____Over $17 million

13. DFARS 252.219-7000 SMALL DISADVANTAGED BUSINESS CONCERN REPRESENTATION (DOD CONTRACTS (JUN 1997)

(a) Definition.

"Small disadvantaged business concern," as used in this provision, means a small business concern, owned and controlled by individuals who are both socially and economically disadvantaged, as defined by the Small Business Administration at 13 CFR Part 124, the majority of earnings of which directly accrue to such individuals. This term also means a small business concern owned and controlled by an economically disadvantaged Indian tribe or Native Hawaiian organization which meets the requirements of 13 CFR 124.112 or 13 CFR 124.113, respectively. In general, 13 CFR Part 124 describes a small disadvantaged business concern as a small business concern--

(1) Which is at least 51 percent unconditionally owned by one or more socially and economically disadvantaged individuals; or

(2) In the case of any publicly owned business, at least 51 percent of the voting stock is unconditionally owned by one or more socially and economically disadvantaged individuals; and

(3) Whose management and daily business operations are controlled by one or more such individuals.

(b) Representations. Check the category in which your ownership falls--

_____ Subcontinent Asian (Asian-Indian) American (U.S. citizen with origins from India, Pakistan, Bangladesh, Sri Lanka, Bhutan, the Maldives Islands, or Nepal)

_____ Asian-Pacific American (U.S. citizen with origins from Japan, China, the Philippines, Vietnam, Korea, Samoa, Guam, U.S. Trust Territory of the Pacific Islands (Republic of Palau), the Northern Mariana Islands, Laos, Kampuchea (Cambodia), Taiwan, Burma, Thailand, Malaysia, Indonesia, Singapore, Brunei, Republic of the Marshall Islands, the Federated States of Micronesia, Macao, Hong Kong, Fiji, Tonga, Kiribati, Tuvalu, or Nauru)

_____ Black American (U.S. citizen)

_____ Hispanic American (U.S. citizen with origins from South America, Central America, Mexico, Cuba, the Dominican Republic, Puerto Rico, Spain, or Portugal)

_____ Native American (American Indians, Eskimos, Aleuts, or Native Hawaiians, including Indian tribes or Native Hawaiian organizations)

_____ Individual/concern, other than one of the preceding, currently certified for participation in the Minority Small Business and Capital Ownership Development Program under Section 8(a) of the Small Business Act

_____ Other

(c) Complete the following--

(1) The offeror is_____ is not _____a small disadvantaged business concern.

(2) The Small Business Administration (SBA) has_____has not _____made a determination concerning the offeror’s status as a small disadvantaged business concern. If the SBA has made a determination, the date of the determination was_____and the offeror--

_____ Was found by SBA to be socially and economically disadvantaged and no circumstances have changed to vary that determination.

_____ Was found by SBA not to be socially and economically disadvantaged but circumstances which caused the determination have changed.

(d) Penalties and Remedies. Anyone who misrepresents the status of a concern as a small disadvantaged business for the purpose of securing a contract or subcontract shall--

(1) Be punished by imposition of a fine, imprisonment, or both;

(2) Be subject to administrative remedies, including suspension and debarment; and

(3) Be ineligible for participation in programs conducted under authority of the Small Business Act.

14. FAR 52.222-21 CERTIFICATION OF NONSEGREGATED FACILITIES (APR 1984)

(a) "Segregated facilities," as used in this provision, means any waiting rooms, work areas, rest rooms and wash rooms, restaurants and other eating areas, time clocks, locker rooms and other storage or dressing areas, parking lots, drinking fountains, recreation or entertainment areas, transportation, and housing facilities provided for employees, that are segregated by explicit directive or are in fact segregated on the basis of race, color, religion, or national origin because of habit, local custom, or otherwise.

(b) By the submission of this offer, the offeror certifies that it does not and will not maintain or provide for its employees any segregated facilities at any of its establishments, and that it does not and will not permit its employees to perform their services at any location under its control where segregated facilities are maintained. The offeror agrees that a breach of this certification is a violation of the Equal Opportunity clause in the contract.

(c) The offeror further agrees that (except where it has obtained identical certifications from proposed subcontractors for specific time periods) it will--

(1) Obtain identical certifications from proposed subcontractors before the award of subcontracts under which the subcontractor will be subject to the Equal Opportunity clause;

(2) Retain the certifications in the files; and

(3) Forward the following notice to the proposed subcontractors (except if the proposed subcontractors have submitted identical certifications for specific time periods):

NOTICE TO PROSPECTIVE SUBCONTRACTORS OF REQUIREMENT FOR CERTIFICATIONS OF NONSEGREGATED FACILITIES.

A Certification of Nonsegregated Facilities must be submitted before the award of a subcontract under which the subcontractor will be subject to the Equal Opportunity clause. The certification may be submitted either for each subcontract or for all subcontracts during a period (i.e., quarterly, semiannually, or annually).

NOTE: The penalty for making false statements in offers is prescribed in 18 U.S.C. 1001.

15. FAR 52.222-22 PREVIOUS CONTRACTS AND COMPLIANCE REPORTS (APR 1984)

The offeror represents that--

(a) It /_/ has, /_/ has not, participated in a previous contract or subcontract subject either to the Equal Opportunity clause of this solicitation, the clause originally contained in Section 310 of Executive Order No. 10925, or the clause contained in Section 201 of Executive Order No. 11114;

(b) It /_/ has, /_/ has not, filed all required compliance reports; and

(c) Representations indicating submission of required compliance reports, signed by proposed subcontractors, will be obtained before subcontract awards.

16. FAR 52.223-1 CLEAN AIR AND WATER CERTIFICATION (APR 1984)

The Offeror certifies that--

(a) Any facility to be used in the performance of this proposed contract is /_/ is not /_/ listed on the Environmental Protection Agency (EPA) List of Violating Facilities;

(b) The Offeror will immediately notify the Contracting Officer, before award, of the receipt of any communication from the Administrator, or a designee, of the EPA, indicating that any facility that the Offeror proposes to use for the performance of the contract is under consideration to be listed on the EPA List of Violating Facilities; and

(c) The Offeror will include a certification substantially the same as this certification, including this paragraph (c), in every nonexempt subcontract.

17. FAR 52.223-3 HAZARDOUS MATERIAL IDENTIFICATION AND MATERIAL SAFETY DATA (JAN 1997)

(a) "Hazardous material," as used in this clause, includes any material defined as hazardous under the latest version of Federal Standard No. 313 (including revisions adopted during the term of the contract).

(b) The Offeror must list any hazardous material, as defined in paragraph (a) of this clause, to be delivered under this contract. The hazardous material shall be properly identified and include any applicable identification number, such as National Stock Number or Special Item Number. This information shall also be included on the Material Safety Data Sheet submitted under this contract.

Material (If none, insert None)	Identification No.

(c) This list must be updated during performance of the contract whenever the Contractor determines that any other material to be delivered under this contract is hazardous.

(d) The apparently successful Offeror agrees to submit, for each item as required prior to award, a Material Safety Data Sheet, meeting the requirements of 29 CFR 1910.1200(g) and the latest version of Federal Standard No. 313, for all hazardous material identified in paragraph (b) of this clause. Data shall be submitted in accordance with Federal Standard No. 313, whether or not the apparently successful Offeror is the actual manufacturer of these items. Failure to submit the Material Safety Data Sheet prior to award may result in the apparently successful Offeror being considered nonresponsible and ineligible for award.

(e) If, after award, there is a change in the composition of the item(s) or a revision to Federal Standard No. 313, which renders incomplete or inaccurate the data submitted under paragraph (d) of this clause or the certification submitted under paragraph (c) of this clause, the Contractor shall promptly notify the Contracting Officer and resubmit the data.

(f) Neither the requirements of this clause nor any act or failure to act by the Government shall relieve the Contractor of any responsibility or liability for the safety of Government, Contractor, or subcontractor personnel or property.

(g) Nothing contained in this clause shall relieve the Contractor from complying with applicable Federal, State, and local laws, codes, ordinances, and regulations (including the obtaining of licenses and permits) in connection with hazardous material.

(h) The Government’s rights in data furnished under this contract with respect to hazardous material are as follows:

(1) To use, duplicate and disclose any data to which this clause is applicable. The purposes of this right are to--

(i) Apprise personnel of the hazards to which they may be exposed in using, handling, packaging, transporting, or disposing of hazardous materials;

(ii) Obtain medical treatment for those affected by the material; and

(iii) Have others use, duplicate, and disclose the data for the Government for these purposes.

(2) To use, duplicate, and disclose data furnished under this clause, in accordance with subparagraph (h)(1) of this clause, in precedence over any other clause of this contract providing for rights in data.

(3) The Government is not precluded from using similar or data acquired from other sources.

18. FAR 52.223-5 POLLUTION PREVENTION AND RIGHT-TO-KNOW INFORMATION (MAR 1997)

(a) Executive Order 12856 of August 3, 1993, requires Federal facilities to comply with the provisions of the Emergency Planning and Community Right-to-Know Act of 1986 (EPCRA) (42 U.S.C. 11001-11050) and the Pollution Prevention Act of 1990 (PPA) (42 U.S.C. 13101-13109).

(b) The Contractor shall provide all information needed by the Federal facility to comply with the emergency planning reporting requirements of Section 302 of EPCRA, the emergency notice requirements of Section 304 of EPCRA, the list of Material Data Safety Sheets required by Section 311 of EPCRA, the emergency and hazardous chemical inventory forms of Section 312 of EPCRA, and the toxic chemical release inventory of Section 313 of EPCRA, which includes the reduction and recycling information required by Section 6607 of PPA.

19. FAR 52.223-13 CERTIFICATION OF TOXIC CHEMICAL RELEASE REPORTING (OCT 1996)

(a) Submission of this certification is a prerequisite for making or entering into this contract imposed by Executive Order 12969, August 8, 1995.

(b) By signing this offer, the offeror certifies that--

(1) As the owner or operator of facilities that will be used in the performance of this contract that are subject to the filing and reporting requirements described in section 313 of the Emergency Planning and Community Right-to-Know Act of 1986 (EPCRA) (42 U.S.C. 11023) and section 6607 of the Pollution Prevention Act of 1990 (PPA) (42 U.S.C. 13106), the offeror will file and continue to file for such facilities for the life of the contract the Toxic Chemical Release Inventory Form (Form R) as described in sections 313(a) and (g) of EPCRA and section 6607 of PPA; or

(2) None of its owned or operated facilities to be used in the performance of this contract is subject to the Form R filing and reporting requirements because each such facility is exempt for at least one of the following reasons: [*Check each block that is applicable*.]

/_/ (i) The facility does not manufacture, process, or otherwise use any toxic chemicals listed under section 313(c) of EPCRA, 42 U.S.C. 11023(c);

/_/ (ii) The facility does not have 10 or more full-time employees as specified in section 313(b)(1)(A) of EPCRA, 42 U.S.C. 11023(b)(1)(A);

/_/ (iii) The facility does not meet the reporting thresholds of toxic chemicals established under section 313(f) of EPCRA, 42 U.S.C. 11023(f) (including the alternate thresholds at 40 CFR 372.27, provided an appropriate certification form has been filed with EPA);

/_/ (iv) The facility does not fall within Standard Industrial Classification Code (SIC) designations 20 through 39 as set forth in section 19.102 of the Federal Acquisition Regulation; or

/_/ (v) The facility is not located within any State of the United States, the District of Columbia, the Commonwealth of Puerto Rico, Guam, American

Samoa, the United States Virgin Islands, the Northern Mariana Islands, or any other territory or possession over which the United States has jurisdiction.

20. DFARS 252.223-7001 HAZARD WARNING LABELS (DEC 1991)

(a) "Hazardous material," as used in this clause, is defined in the Hazardous Material Identification and Material Safety Data clause of this contract.

(b) The Contractor shall label the item package (unit container) of any hazardous material to be delivered under this contract in accordance with the Hazard Communication Standard (29 CFR 1910.1200 et seq.). The Standard requires that the hazard warning label conform to the requirements of the standard unless the material is otherwise subject to the labeling requirements of one of the following statutes:

(1) Federal Insecticide, Fungicide and Rodenticide Act;
(2) Federal Food, Drug and Cosmetics Act;
(3) Consumer Product Safety Act;
(4) Federal Hazardous Substances Act; or
(5) Federal Alcohol Administration Act.

(c) The Offeror shall list which hazardous material listed in the Hazardous Material Identification and Material Safety Data clause of this contract will be labeled in accordance with one of the Acts in paragraphs (b)(1) through (5) of this clause instead of the Hazard Communication Standard. Any hazardous material not listed will be interpreted to mean that a label is required in accordance with the Hazard Communication Standard.

Material (if none, insert "none.")	Act

(d) The apparently successful Offeror agrees to submit, before award, a copy of the hazard warning label for all hazardous materials not listed in paragraph (c) of this clause. The Offeror shall submit the label with the Material Safety Data Sheet being furnished under the Hazardous Material Identification and Material Safety Data clause of this contract.

(e) The Contractor shall also comply with MIL-STD-129, Marking for Shipment and Storage (including revisions adopted during the term of this contract).

21. DFARS 252.225-7006 BUY AMERICAN ACT--TRADE AGREEMENTS--BALANCE OF PAYMENTS PROGRAM CERTIFICATE (JUN 1997) (APPLICABLE IF DFARS 252.225-7007 APPLIES - SEE SECTION 00700)

(a) Definitions.
"Caribbean Basin country end product," "designated country end product," "domestic end product," “NAFTA country end product,” “nondesignated country end product," "qualifying country end product," and "U.S. made end product" have the meanings given in the Trade Agreements and the Buy American Act and Balance of Payments Program clauses of this solicitation.

(b) Evaluation.
Offers will be evaluated in accordance with the policies and procedures of Part 225 of the Defense Federal Acquisition Regulation Supplement. Offers of foreign end products that are not U.S. made, qualifying country, designated country, Caribbean Basin country, or NAFTA country end products will not be considered for award, unless the Contracting Officer determines that there are no offers of such end products; or the offers of such end products are

insufficient to fulfill the requirements; or a national interest exception to the Trade Agreements Act is granted.

(c) Certifications.

(1) The Offeror certifies that--

(i) Each end product, except the end products listed in paragraph (c)(2) of this provision, is a domestic end product (as defined in the Buy American Act and Balance of Payments Program clause of this solicitation); and

(ii) Components of unknown origin are considered to have been mined, produced, or manufactured outside the United States or a qualifying country.

(2) The Offeror must identify and certify all end products that are not domestic end products.

(i) The Offeror certifies that the following supplies qualify as "U.S. made end products" but do not meet the definition of "domestic end product":

_____
(Insert line item number)

(ii) The Offeror certifies that the following supplies are qualifying country end products:

_____
(Insert line item number)

_____
(Insert country of origin)

(iii) The Offeror certifies that the following supplies qualify as designated country end products:

_____
(Insert line item number)

_____
(Insert country of origin)

(iv) The Offeror certifies that the following supplies qualify as Caribbean Basin country end products:

_____
(Insert line item number)

_____
(Insert country of origin)

(v) The Offeror certifies that the following supplies qualify as NAFTA country end products:

_____
(Insert line item number)

_____
(Insert country of origin)

(vi) The Offeror certifies that the following supplies are other nondesignated country end products:

_____
(Insert line item number)

_____
(Insert country of origin)

22. DFARS 252.225-7035 BUY AMERICAN ACT--NORTH AMERICAN FREE TRADE AGREEMENT IMPLEMENTATION ACT--BALANCE OF PAYMENTS PROGRAM CERTIFICATE (MAY 1995) (APPLICABLE IF DFARS 252.225-7036 APPLIES - SEE SECTION 00700)

(a) Definitions.

"Domestic end product," "qualifying country end product," and "U.S. made end product" have the meanings given in the North American Free Trade Agreement Implementation Act or Buy American Act and Balance of Payments Program clauses of this solicitation.

(b) Evaluation.

Offers will be evaluated by giving preference to U.S. made end products, qualifying country end products, or NAFTA country end products over other end products.

(c) Certifications.

(1) The Offeror certifies that--

(i) Each end product, except the end products listed in paragraph (c)(2) of this provision, is a domestic end product (as defined in the Buy American Act and Balance of Payments Program clause of this solicitation); and

(ii) Components of unknown origin are considered to have been mined, produced, or manufactured outside the United States or a qualifying country.

(2) The Offeror must identify and certify all end products that are not domestic end products.

(i) The Offeror certifies that the following supplies qualify as "U.S. made end products" but do not meet the definition of "domestic end product":

_____
(Insert line item number)

(ii) The Offeror certifies that the following supplies are qualifying country (except Canada) end products:

_____	_____
(Insert line item number)	(Insert country of origin)

(iii) The Offeror certifies that the following supplies qualify as NAFTA country end products:

_____	_____
(Insert Line item number)	(Insert country of origin)

(iv) The Offeror certifies that the following supplies are other non-NAFTA country end products:

_____	_____
(Insert Line item number)	(Insert country of origin)

23. DFARS 252.247-7022 REPRESENTATION OF EXTENT OF TRANSPORTATION BY SEA (AUG 1992)

(a) The Offeror shall indicate by checking the appropriate blank in paragraph (b) of this provision whether transportation of supplies by sea is anticipated under the resultant contract. The term supplies is defined in the Transportation of Supplies by Sea clause of this solicitation.

(b) Representation.

The Offeror represents that it--

_____ Does anticipate that supplies will be transported by sea in the performance of any contract or subcontract resulting from this solicitation.

_____ Does not anticipate that supplies will be transported by sea in the performance of any contract or subcontract resulting from this solicitation.

(c) Any contract resulting from this solicitation will include the Transportation of Supplies by Sea clause. If the Offeror represents that it will not use ocean transportation, the resulting contract will also include the Defense FAR Supplement clause at 252.247-7024, Notification of Transportation of Supplies by Sea.

END OF SECTION

SECTION 00700

CONSTRUCTION CONTRACT CLAUSES

SECTION 00700

CONTRACT CLAUSES

FAR 52.252-2 CLAUSES INCORPORATED BY REFERENCE (JUN 1988)

This solicitation incorporates one or more clauses by reference, with the same force and effect as if they were given in full text. Upon request, the Contracting Officer will make their full text available.

CONTRACT CLAUSES BY REFERENCE:

1.	DFARS 252.201-7000	CONTRACTING OFFICER'S REPRESENTATIVE (DEC 1991)
2.	FAR 52.202-1 I	DEFINITIONS (OCT 1995)--ALTERNATE I (APR 1984)
3.	FAR 52.203-3	GRATUITIES (APR 1984)
4.	FAR 52.203-5	COVENANT AGAINST CONTINGENT FEES (APR 1984)
5.	FAR 52.203-6	RESTRICTIONS ON SUBCONTRACTOR SALES TO THE GOVERNMENT (JUL 1995)
6.	FAR 52.203-7	ANTI-KICKBACK PROCEDURES (JUL 1995)
7.	FAR 52.203-10	PRICE OR FEE ADJUSTMENT FOR ILLEGAL OR IMPROPER ACTIVITY (JAN 1997)
8.	FAR 52.203-12	LIMITATION ON PAYMENTS TO INFLUENCE CERTAIN FEDERAL TRANSACTIONS (JUN 1997) (APPLICABLE OVER $100,000)
9.	DFARS 252.203-7001	SPECIAL PROHIBITION ON EMPLOYMENT (JUN 1997)
10.	DFARS 252.203-7002	DISPLAY OF DOD HOTLINE POSTER (DEC 1991) (APPLICABLE OVER $5 MILLION)
11.	FAR 52.204-2 II	SECURITY REQUIREMENTS (AUG 1996)--ALTERNATE II (APR 1984) (APPLICABLE IF CONTRACTOR HAS ACCESS TO CLASSIFIED INFORMATION)
12.	DFARS 252.204-7000	DISCLOSURE OF INFORMATION (DEC 1991) (APPLICABLE IF CONTRACTOR HAS ACCESS TO INFORMATION INAPPROPRIATE FOR RELEASE)
13.	DFARS 252.205-7000	PROVISION OF INFORMATION TO COOPERATIVE AGREEMENT HOLDERS (DEC 1991) (APPLICABLE OVER $500,000)
14.	FAR 52.209-6	PROTECTING THE GOVERNMENT'S INTEREST WHEN SUBCONTRACTING WITH CONTRACTORS DEBARRED, SUSPENDED OR PROPOSED FOR DEBARMENT (JUL 1995)
15.	DFARS 252.209-7000	ACQUISITION FROM SUBCONTRACTORS SUBJECT TO ON-SITE INSPECTION UNDER THE INTERMEDIATE-RANGE NUCLEAR FORCES (INF) TREATY (NOV 1995)
16.	FAR 52.211-15	DEFENSE PRIORITY AND ALLOCATION REQUIREMENTS (SEP 1990)

17.	FAR 52.211-18	VARIATION IN ESTIMATED QUANTITY (APR 1984) (APPLICABLE IF THERE ARE ESTIMATED-QUANTITY LINE ITEMS IN PRICING SCHEDULE)
18.	FAR 52.214-26	AUDIT AND RECORDS--SEALED BIDDING (OCT 1997) (APPLICABLE IF SEALED BIDDING - SEE BLOCK 2, SF1442 - AND OVER $500,000)
19.	FAR 52.214-27	PRICE REDUCTION FOR DEFECTIVE COST OR PRICING DATA-MODIFICATIONS-SEALED BIDDING (OCT 1997) (APPLICABLE IF SEALED BIDDING - SEE BLOCK 2, SF1442 - AND OVER $500,000)
20.	FAR 52.214-28	SUBCONTRACTOR COST OR PRICING DATA--MODIFICATIONS--SEALED BIDDING (OCT 1997) (APPLICABLE IF SEALED BIDDING - SEE BLOCK 2, SF1442 - AND OVER $500,000)
21.	FAR 52.214-29	ORDER OR PRECEDENCE--SEALED BIDDING (JAN 1986) (APPLICABLE IF SEALED BIDDING - SEE BLOCK 2, SF1442)
22.	FAR 52.215-2	AUDIT AND RECORDS--NEGOTIATION (AUG 1996) (APPLICABLE IF CONTRACTING BY NEGOTIATIONS)
23.	FAR 52.215-10	PRICE REDUCTION FOR DEFECTIVE COST OR PRICING DATA (OCT 1997) (APPLICABLE IF CONTRACTING BY NEGOTIATIONS AND COST OR PRICING DATA IS REQUIRED)
24.	FAR 52.215-11	PRICE REDUCTION FOR DEFECTIVE COST OR PRICING DATA -- MODIFICATIONS (OCT 1997) (APPLICABLE IF CONTRACTING BY NEGOTIATIONS AND COST OR PRICING DATA IS REQUIRED FOR PRICING OF MODIFICATIONS)
25.	FAR 52.215-12	SUBCONTRACTOR COST OR PRICING DATA (OCT 1997) (APPLICABLE FAR 52.215-10 APPLIES)
26.	FAR 52.215-13	SUBCONTRACTOR COST OR PRICING DATA - MODIFICATIONS (OCT 1997) (APPLICABLE FAR 52.215-11 APPLIES)
27.	FAR 52.215-15	TERMINATION OF DEFINED BENEFIT PENSION PLANS (OCT 1997) (APPLICABLE IF COST OR PRICING DATA IS REQUIRED AND FOR WHICH ANY PREAWARD OR POSTAWARD COST DETERMINATIONS WILL BE SUBJECT TO FAR SUBPART 31.2)
28.	FAR 52.215-17	WAIVER OF FACILITIES CAPITAL COST OF MONEY (OCT 1997) (APPLICABLE ANY TIME THE COST PRINCIPLES OF FAR 31.2 APPLY - MODIFICATIONS - AND ORIGINAL BID/OFFER DID NOT INCLUDE FACILITIES CAPITAL COST OF MONEY)

29.	FAR 52.215-18	REVERSION OR ADJUSTMENT OF PLANS FOR POSTRETIREMENT BENEFITS (PRB) OTHER THAN PENSIONS (OCT 1997) (APPLICABLE IF COST OR PRICING DATA WILL BE REQUIRED OR FOR WHICH ANY PREAWARD OR POSTAWARD COST DETERMINATIONS WILL BE SUBJECT TO FAR SUBPART 31.2)
30.	DFARS 252.215-7000	PRICING ADJUSTMENTS (DEC 1991) (APPLICABLE IF FAR 52.215-12 APPLIES)
31.	DFARS 252.215-7002	COST ESTIMATING SYSTEM REQUIREMENTS (JUL 1997) (APPLICABLE IF NEGOTIATED - SEE BLOCK 2, SF 1442 - AND CONTRACT AWARD IS MADE ON THE BASIS OF CERTIFIED COST OR PRICING DATA)
32.	FAR 52.219-6	NOTICE OF TOTAL SMALL BUSINESS SET-ASIDE (JUL 1996) (APPLICABLE IF SET ASIDE FOR SMALL BUSINESS - SEE DD FORM 1707)
33.	FAR 52.219-8	UTILIZATION OF SMALL, SMALL DISADVANTAGED AND WOMEN-OWNED SMALL BUSINESS CONCERNS (JUN 1997)
34.	FAR 52.219-16	LIQUIDATED DAMAGES--SUBCONTRACTING PLAN (OCT 1995) (APPLICABLE IF FAR 52.219-9 IS APPLICABLE)
35.	DFARS 252.219-7003	SMALL, SMALL DISADVANTAGED AND WOMEN-OWNED SMALL BUSINESS SUBCONTRACTING PLAN (DOD CONTRACTS) (APR 1996) (APPLICABLE IF FAR 52.219-9 IS APPLICABLE)
36.	FAR 52.222-3	CONVICT LABOR (AUG 1996)
37.	FAR 52.222-4	CONTRACT WORK HOURS AND SAFETY STANDARDS ACT-OVERTIME COMPENSATION (JUL 1995)
38.	FAR 52.222-6	DAVIS-BACON ACT (FEB 1995)
39.	FAR 52.222-7	WITHHOLDING OF FUNDS (FEB 1988)
40.	FAR 52.222-8	PAYROLLS AND BASIC RECORDS (FEB 1988)
41.	FAR 52.222-9	APPRENTICES AND TRAINEES (FEB 1988)
42.	FAR 52.222-10	COMPLIANCE WITH COPELAND ACT REQUIREMENTS (FEB 1988)
43.	FAR 52.222-11	SUBCONTRACTS (LABOR STANDARDS) (FEB 1988)
44.	FAR 52.222-12	CONTRACT TERMINATION--DEBARMENT (FEB 1988)
45.	FAR 52.222-13	COMPLIANCE WITH DAVIS-BACON AND RELATED ACT REGULATIONS (FEB 1988)
46.	FAR 52.222-14	DISPUTES CONCERNING LABOR STANDARDS (FEB 1988)
47.	FAR 52.222-15	CERTIFICATION OF ELIGIBILITY (FEB 1988)
48.	FAR 52.222-26	EQUAL OPPORTUNITY (APR 1984)

49.	FAR 52.222-27	AFFIRMATIVE ACTION COMPLIANCE REQUIREMENTS FOR CONSTRUCTION (APR 1984)
50.	FAR 52.222-35	AFFIRMATIVE ACTION FOR SPECIAL DISABLED AND VIETNAM ERA VETERANS (APR 1984)
51.	FAR 52.222-36	AFFIRMATIVE ACTION FOR HANDICAPPED WORKERS (APR 1984)
52.	FAR 52.222-37	EMPLOYMENT REPORTS ON SPECIAL DISABLED VETERANS AND VETERANS OF THE VIETNAM ERA (JAN 1988)
53.	FAR 52.223-2	CLEAN AIR AND WATER (APR 1984) (APPLICABLE OVER $100,000 AND THE ANSWER TO SECTION 00600, 52.223-1, IS YES)
54.	FAR 52.223-6	DRUG-FREE WORKPLACE (JAN 1997)
55.	DFARS 252.223-7002	SAFETY PRECAUTIONS FOR AMMUNITION AND EXPLOSIVES (MAY 1994) (APPLICABLE IF EXPLOSIVES ARE USED)
56.	DFARS 252.223-7003	CHANGE IN PLACE OF PERFORMANCE--AMMUNITION AND EXPLOSIVES (DEC 1991) (APPLICABLE IF EXPLOSIVES ARE USED)
57.	FAR 52.225-11	RESTRICTIONS ON CERTAIN FOREIGN PURCHASES (OCT 1996)
58.	DFARS 252.225-7007	TRADE AGREEMENTS ACT (JUL 1997) (APPLICABLE IF CONTRACT AMOUNT IS $182,000 OR OVER EXCEPT WHEN SMALL OR SMALL, DISADVANTAGED BUSINESS PREFERENCE PROGRAM APPLIES TO THIS ACQUISITION)
59.	DFARS 252.225-7008	SUPPLIES TO BE ACCORDED DUTY-FREE ENTRY (DEC 1991)
60.	DFARS 252.225-7009	DUTY-FREE ENTRY--QUALIFYING COUNTRY END PRODUCTS AND SUPPLIES (JAN 1997)
61.	DFARS 252.225-7012	PREFERENCE FOR CERTAIN DOMESTIC COMMODITIES (SEP 1997)
62.	DFARS 252.225-7026	REPORTING OF CONTRACT PERFORMANCE OUTSIDE THE UNITED STATES (NOV 1995) (APPLICABLE OVER $500,000)
63.	DFARS 252.225-7036	NORTH AMERICAN FREE TRADE AGREEMENT IMPLEMENTATION ACT (JAN 1994) (APPLICABLE IF CONTRACT AMOUNT IS $6,500,000 OR OVER EXCEPT WHEN SMALL OR SMALL, DISADVANTAGED BUSINESS PREFERENCE PROGRAM APPLIES TO THIS ACQUISITION)
64.	DFARS 252.225-7037	DUTY-FREE ENTRY--NAFTA COUNTRY END PRODUCTS AND SUPPLIES (JAN 1997) (APPLICABLE IF DFARS 252.225-7036 APPLIES - SEE ABOVE)
65.	FAR 52.226-1	UTILIZATION OF INDIAN ORGANIZATIONS AND INDIAN-OWNED ECONOMIC ENTERPRISES (SEP 1996)

		(APPLICABLE IF FAR 52.219-9 IS APPLICABLE)
66.	FAR 52.227-1	AUTHORIZATION AND CONSENT (JUL 1995)
67.	FAR 52.227-4	PATENT INDEMNITY--CONSTRUCTION CONTRACTS (APR 1984)
68.	FAR 52.227-11	PATENT RIGHTS--RETENTION BY THE CONTRACTOR (SHORT FORM) (JUN 1997) (APPLICABLE IF NONSTANDARD WORK AND SMALL BUSINESS - SEE FAR 27.304-3)
69.	FAR 52.227-12	PATENT RIGHTS--RETENTION BY THE CONTRACTOR (LONG FORM) (JAN 1997) (APPLICABLE IF NONSTANDARD WORK AND LARGE BUSINESS - SEE FAR 27.304-3)
70.	DFARS 252.227-7000	NON-ESTOPPEL (OCT 1966)
71.	DFARS 252.227-7022	GOVERNMENT RIGHTS (UNLIMITED) (MAR 1979) (APPLICABLE TO CONSTRUCTION INVOLVING DESIGN SERVICES)
72.	DFARS 252.227-7023	DRAWINGS AND OTHER DATA TO BECOME PROPERTY OF GOVERNMENT (MAR 1979) (APPLICABLE TO CONSTRUCTION INVOLVING DESIGN SERVICES)
73.	DFARS 252.227-7024	NOTICE AND APPROVAL OF RESTRICTED DESIGNS (APR 1984) (APPLICABLE TO CONSTRUCTION INVOLVING DESIGN SERVICES)
74.	DFARS 252.227-7033	RIGHTS IN SHOP DRAWINGS (APR 1966)
75.	DFARS 252.227-7034	PATENTS--SUBCONTRACTS (APR 1984)
76.	DFARS 252.227-7039	PATENTS--REPORTING OF SUBJECT INVENTIONS (APR 1990) (APPLICABLE IF FAR 52.227-11 ABOVE IS APPLICABLE)
77.	FAR 52.228-1	BID GUARANTEE (SEP 1996)
78.	FAR 52.228-2	ADDITIONAL BOND SECURITY (OCT 1997)
79.	FAR 52.228-11	PLEDGES OF ASSETS (FEB 1992)
80.	FAR 52.229-3	FEDERAL, STATE, AND LOCAL TAXES (JAN 1991)
81.	FAR 52.229-5	TAXES--CONTRACTS PERFORMED IN U.S. POSSESSIONS OR PUERTO RICO (APR 1984)
82.	DFARS 252.231-7000	SUPPLEMENTAL COST PRINCIPLES (DEC 1991)
83.	FAR 52.232-5	PAYMENTS UNDER FIXED-PRICE CONSTRUCTION CONTRACTS (MAY 1997)
84.	FAR 52.232-17	INTEREST (JUN 1996)
85.	FAR 52.232-23 I	ASSIGNMENT OF CLAIMS (JAN 1986)--ALTERNATE I (APR 1984)

86.	FAR 52.233-1	DISPUTES (OCT 1995)
87.	FAR 52.233-3	PROTEST AFTER AWARD (AUG 1996)
88.	FAR 52.236-2	DIFFERING SITE CONDITIONS (APR 1984)
89.	FAR 52.236-3	SITE INVESTIGATION AND CONDITIONS AFFECTING THE WORK (APR 1984)
90.	FAR 52.236-5	MATERIALS AND WORKMANSHIP (APR 1984)
91.	FAR 52.236-6	SUPERINTENDENCE BY THE CONTRACTOR (APR 1984)
92.	FAR 52.236-7	PERMITS AND RESPONSIBILITIES (NOV 1991)
93.	FAR 52.236-8	OTHER CONTRACTS (APR 1984)
94.	FAR 52.236-9	PROTECTION OF EXISTING VEGETATION, STRUCTURES, EQUIPMENT, UTILITIES, AND IMPROVEMENTS (APR 1984)
95.	FAR 52.236-10	OPERATIONS AND STORAGE AREAS (APR 1984)
96.	FAR 52.236-11	USE AND POSSESSION PRIOR TO COMPLETION (APR 1984)
97.	FAR 52.236-12	CLEANING UP (APR 1984)
98.	FAR 52.236-13 I	ACCIDENT PREVENTION (NOV 1991)--ALTERNATE I (NOV 1991)
99.	FAR 52.236-15	SCHEDULES FOR CONSTRUCTION CONTRACTS (APR 1984) (APPLICABLE IF PERFORMANCE PERIOD EXCEEDS 60 DAYS)
100.	FAR 52.236-17	LAYOUT OF WORK (APR 1984)
101.	FAR 52.236-21 I	SPECIFICATIONS AND DRAWINGS FOR CONSTRUCTION (FEB 1997)--ALTERNATE I (APR 1984)
102.	DFARS 252.236-7000	MODIFICATION PROPOSALS--PRICE BREAKDOWN (DEC 1991)
103.	DFARS 252.236-7008	CONTRACT PRICES-BIDDING SCHEDULES (DEC 1991) (APPLICABLE IF THERE ARE UNIT PRICES)
104.	FAR 52.242-13	BANKRUPTCY (JUL 1995)
105.	FAR 52.242-14	SUSPENSION OF WORK (APR 1984)
106.	DFARS 252.242-7000	POSTAWARD CONFERENCE (DEC 1991)
107.	FAR 52.243-4	CHANGES (AUG 1987)
108.	DFARS 252.243-7001	PRICING OF CONTRACT MODIFICATIONS (DEC 1991)
109.	FAR 52.244-1	SUBCONTRACTS (FIXED-PRICE CONTRACTS) (OCT 1997) (APPLICABLE OVER $500,000)
110.	FAR 52.245-1	PROPERTY RECORDS (APR 1984) (APPLICABLE IF GOVERNMENT-FURNISHED PROPERTY (GFP) IS INVOLVED AND THE GOVERNMENT WILL

	MAINTAIN OFFICIAL PROPERTY RECORDS-IF THERE IS ANY GFP SECTION 00800 WILL CONTAIN A LIST OF THE GFP)
111. FAR 52.245-2	GOVERNMENT PROPERTY (FIXED-PRICE CONTRACTS (DEC 1989) (APPLICABLE IF GOVERNMENT-FURNISHED PROPERTY IS INVOLVED WORTH OVER $100,000-SEE SECTION 00800)
112. FAR 52.245-4	GOVERNMENT-FURNISHED PROPERTY (SHORT FORM) (APR 1984) (APPLICABLE IF GOVERNMENT-FURNISHED PROPERTY IS INVOLVED WORTH $100,000 OR LESS - SEE SECTION 00800)
113. DFARS 252.245-7001	REPORTS OF GOVERNMENT PROPERTY (MAY 1994) (APPLICABLE IF FAR 52.245-2 IS APPLICABLE)
114. FAR 52.246-21	WARRANTY OF CONSTRUCTION (MAR 1994) (NOT APPLICABLE TO CONTRACTS SOLELY FOR DREDGING, EXCAVATION, GRUBBING OR CLEARING; EFARS 46.710)
115. DFARS 252.247-7024	NOTIFICATION OF TRANSPORTATION OF SUPPLIES BY SEA (NOV 1995) (APPLICABLE IF THE ANSWER TO SECTION 00600, DFARS 52.247-7002, IS NEGATIVE)
116. FAR 52.248-3	VALUE ENGINEERING--CONSTRUCTION (MAR 1989) (APPLICABLE OVER $100,000)
117. FAR 52.249-1	TERMINATION FOR CONVENIENCE OF THE GOVERNMENT (FIXED-PRICE) (SHORT FORM) (APR 1984) (APPLICABLE $100,000 OR LESS)
118. FAR 52.249-2 I	TERMINATION FOR CONVENIENCE OF THE GOVERNMENT (FIXED-PRICE) (SEP 1996)--ALTERNATE I (SEP 1996) (APPLICABLE OVER $100,000)
119. FAR 52.249-10	DEFAULT (FIXED-PRICE CONSTRUCTION) (APR 1984)
120. FAR 52.253-1	COMPUTER-GENERATED FORMS (JAN 1991)

END OF SECTION

SECTION 00800

SPECIAL CONTRACT REQUIREMENTS

SECTION 00800

SPECIAL CONTRACT REQUIREMENTS

PARAGRAPH

1.	FAR 52.204-4	PRINTING/COPYING DOUBLE-SIDED ON RECYCLED PAPER (JUN 1996)
2.	DFARS 252.204-7003	CONTROL OF GOVERNMENT PERSONNEL WORK PRODUCT (APR 1992)
3.	FAR 52.211-10	COMMENCEMENT, PROSECUTION, AND COMPLETION OF WORK (APR 1994)
4.	FAR 52.211-12	LIQUIDATED DAMAGES--CONSTRUCTION (APR 1984)
5.	FAR 52.211-13	TIME EXTENSIONS (APR 1984)
6.	SAACONS 52.0211.4853	WORK DAYS AND HOURS (APR 1992)
7.	SAACONS 52.0215-4101	ALTERNATE STRUCTURED APPROACH TO WEIGHTED GUIDELINE METHOD FOR CONSTRUCTION CONTRACTS (EFARS 15.973-100) (MAY 1995)
8.	SAACONS 52.0219-4509	SUBCONTRACTING WITH SMALL, SMALL DISADVANTAGED AND WOMEN-OWNED SMALL BUSINESSES (JAN 1996)
9.	FAR 52.223-14	TOXIC CHEMICAL RELEASE REPORTING (OCT 1996)
10.	DFARS 252.223-7006	PROHIBITION ON STORAGE AND DISPOSAL OF TOXIC AND HAZARDOUS MATERIALS (APR 1993)
11.	SAACONS 52.0223-4803	HAZARDOUS MATERIALS DELIVERED UNDER THIS CONTRACT (MAY 1993)
12.	FAR 52.228-5	INSURANCE--WORK ON A GOVERNMENT INSTALLATION (JAN 1997)
13.	SAACONS 52.0228-4502	MINIMUM INSURANCE REQUIRED (MAY 1993)
14.	EFARS 52.231-5000	EQUIPMENT OWNERSHIP AND OPERATING EXPENSE SCHEDULE (MAR 1995)--EFARS
15.	FAR 52.232-27	PROMPT PAYMENT FOR CONSTRUCTION CONTRACTS (JUN 1997)
16.	DFARS 252.232-7006	REDUCTION OR SUSPENSION OF CONTRACT PAYMENTS UPON FINDING OF FRAUD (AUG 1992)
17.	SAACONS 52.0232-4501	INVOICES (AUG 1991)
18.	FAR 52.236-1	PERFORMANCE OF WORK BY THE CONTRACTOR (APR 1984)
19.	FAR 52.236-4	PHYSICAL DATA (APR 1984)
20.	DFARS 252.236-7001	CONTRACT DRAWINGS, MAPS, AND SPECIFICATIONS (DEC 1991)
21.	SAACONS 52.0236-4801	SALVAGE AND SCRAP GOVERNMENT PROPERTY (OCT 1993)
22.	SAACONS 52.0236-4581	AVAILABILITY OF UTILITIES SERVICES (APR 1992)
23.	SAACONS 52.0236-4901	PARTNERING (MAR 1992)
24.	FAR 52.246-12	INSPECTION OF CONSTRUCTION (AUG 1996)
25.	FAR 52.219-9 I	SMALL, SMALL DISADVANTAGED AND WOMEN-OWNED SMALL BUSINESS SUBCONTRACTING PLAN (AUG 1996)--ALTERNATE I (OCT 1995)
26.	FAR 52.225-5	BUY AMERICAN ACT--CONSTRUCTION MATERIALS (JUN 1997)
27.	DFARS 252.225-7031	SECONDARY ARAB BOYCOTT OF ISRAEL (JUN 1992)
28.	FAR 52.243-7	NOTIFICATION OF CHANGES (APR 1984)
29.	DFARS 252.247-7023	TRANSPORTATION OF SUPPLIES BY SEA (NOV 1995)
30.	FAR 52.252-4	ALTERATIONS IN CONTRACT (APR 1984)
31.	FAR 52.252-6	AUTHORIZED DEVIATIONS IN CLAUSES (APR 1984)
32.	DFARS 252.223-7004	DRUG-FREE WORK FORCE (SEP 1988)
33.	EFARS 52.249-5000	BASIS FOR SETTLEMENT OF PROPOSALS (DEC 1995)

SECTION 00800

SPECIAL CONTRACT REQUIREMENTS

1. FAR 52.204-4 PRINTING/COPYING DOUBLE-SIDED ON RECYCLED PAPER (JUN 1996)

(a) In accordance with Executive Order 12873, dated October 20, 1993, as amended by Executive Order 12995, dated March 25, 1996, the Offeror/Contractor is encouraged to submit paper documents, such as offers, letters, or reports, that are printed/copied double-sided on recycled paper that has at least 20% postconsumer material.

(b) The 20% standard applies to high-speed copies paper, offset paper, forms bond, computer printout paper, and carbonless paper, file folders, white woven envelopes, and other uncoated printed and writing paper, such as writing and office paper, book paper, cotton fiber paper, and cover stock. An alternative to meeting the 20 % postconsumer material standard is 50 % recovered material content of certain industrial by-products.

2. DFARS 252.204-7003 CONTROL OF GOVERNMENT PERSONNEL WORK PRODUCT (APR 1992)

The Contractor's procedures for protecting against unauthorized disclosure of information shall not require Department of Defense employees or members of the Armed Forces to relinquish control of their work products, whether classified or not, to the Contractor.

3. FAR 52.211-10 COMMENCEMENT, PROSECUTION, AND COMPLETION OF WORK (APR 1994)

The Contractor shall be required to (a) commence work under this contract within (10) calendar days after the date the Contractor receives the notice to proceed, (b) prosecute the work diligently, and (c) complete the entire work ready for use not later than 300 calendar days after receipt of notice to proceed. The time stated for completion shall include final cleanup of the premises.

4. FAR 52.211-12 LIQUIDATED DAMAGES--CONSTRUCTION (APR 1984)

(a) If the Contractor fails to complete the work within the time specified in the contract, or any extension, the Contractor shall pay to the Government as liquidated damages, the sum of $700 for each day of delay.
(b) If the Government terminates the Contractor's right to proceed, the resulting damage will consist of liquidated damages until such reasonable time as may be required for final completion of the work together with any increased costs occasioned the Government in completing the work.

(c) If the Government does not terminate the Contractor's right to proceed, the resulting damage will consist of liquidated damages until the work is completed or accepted.

5. FAR 52.211-13 TIME EXTENSIONS (APR 1984)

Notwithstanding any other provisions of this contract, it is mutually understood that the time extensions for changes in the work will depend upon the extent, if any, by which the changes cause delay in the completion of the various elements of CONSTRUCTION. The change order granting the time

extension may provide that the contract completion date will be extended only for those specific elements so delayed and that the remaining contract completion dates for all other portions of the work will not be altered and may further provide for an equitable readjustment of liquidated damages under the new completion schedule.

6. SAACONS 52.0211.4853 WORK DAYS AND HOURS (APR 1992)

Working hours will normally be between the hours of 7:00 AM and 5:00 PM, excluding Saturdays, Sundays, and federal holidays. If the Contractor desires to work during periods other than above, the Contractor shall make the request to the Contracting Officer three (3) work days in advance. If Government inspection forces are not required or such forces are reasonably available, the Contracting Officer may authorize the Contractor to perform work during periods other than normal duty hours/days. However, if Government inspectors are required to perform in excess of their normal duty hours/days solely for the benefit of the Contractor, the actual cost of inspection at overtime rates will be charged to the Contractor. These adjustments to the contract price may be made periodically as directed by the Contracting Officer.

7. SAACONS 52.0215-4101 ALTERNATE STRUCTURED APPROACH TO WEIGHTED GUIDELINE METHOD FOR CONSTRUCTION CONTRACTS (EFARS 15.973-100) (MAY 1995)

The following alternate structured approach shall be used for all fixed-price construction contract actions.

Factor	Rate	Weight	Value
Degree of risk	20		
Relative difficulty of work	15		
Size of job	15		
Period of performance	15		
Contractor's investment	5		
Assistance by Government	5		
Subcontracting	25		
Total	100%		

Based on the circumstances of the procurement action, each of the above factors shall be weighted from .03 to .12 as indicated below. "Value shall be obtained by multiplying the rate by the weight. The Value column when totaled indicates the fair and reasonable profit percentage under the circumstances of the particular procurement. The profit percentage should be multiplied by the total contract costs, including general and administrative costs.

(1) Degree of risk. Where the work involves no risk or the degree of risk is very small, the weighting should be .03; as the degree of risk increases, the weighting should be increased up to a maximum of .12. Lump sum items shall generally have a higher weight than unit price items; other things to consider include the nature of the work and where it is to be performed. Consider the portion of the work to be done by subcontractors, amount and type of labor included in costs, whether the negotiation is before or after performance of the work, etc. Modifications settled before the fact have much greater risk than those settled after the fact. A weight of .03 is appropriate for after the fact equitable adjustments and/or settlements.

(2) Relative Difficulty of Work: If the work is difficult and complex, the weight should be .12 and should be proportionately reduced to .03 on the simplest of jobs. This factor is tied in to some extent with the degree of

risk. Some other things to consider are the nature of the work, by whom it is to be done (i.e., subcontractors, consultants), what is the time schedule.

(3) Size of Job. Work of $100,000 or less shall be weighted at .12. Work estimated between $100,000 and $5,000,000 shall be proportionately weighted from .12 to .05. Work from $5,000,000 to $10,000,000 shall be weighted at .04. Work in excess of $10,000,000 shall be weighted at .03. It should be noted that control of fixed expenses generally improves with increased job magnitude.

(4) Period of Performance. Work not to exceed one month is to be proportionately weighted at .03. Work in excess of 24 months is to be weighted at .12. Durations between one month and 24 months are to be proportionately weighted between .03 and .12.

(5) Contractor's Investment. To be weighted from .03 to .12 on the basis of below average, average and above average. Things to consider include amount of subcontracting, Government-furnished property or data such as surveys, soil tests, method of making progress payments, and any mobilization payment items.

(6) Assistance by Government. To be weighted from .12 to .03 on the basis of average to above average. Consider use of Government-owned property, equipment and facilities, and expediting assistance.

(7) Subcontracting. To be weighted inversely proportional to the amount of subcontracting. Where 80% or more of the work is to be subcontracted use .03. The weighting should be increased proportionately to .12 where all the work is performed by the contractor's own forces.

8. SAACONS 52.0219-4509 SUBCONTRACTING WITH SMALL, SMALL DISADVANTAGED AND WOMEN-OWNED SMALL BUSINESSES (JAN 1996)

Contractors are cautioned that failure of any Contractor to comply in good faith with the Contract Clauses titled (1) Utilization of Small, Small Disadvantaged and Women-Owned Small Business Concerns or (2) Small, Small Disadvantaged and Women-Owned Small Business Subcontracting Plan, when applicable, will be a material breach of contract. In order to assist contractors in developing a source list of small, small disadvantaged and/or women-owned small business concerns you are encouraged to contact your minority contractor associates, the local Minority Business Development Agency and the appropriate General Business Service Centers in your Standard Metropolitan Statistical Area. Contractors may obtain addresses of these sources from:

Contractors are cautioned that failure of any Contractor to comply in good faith with the Contract Clauses titled (1) Utilization of Small Business Concerns and Small Disadvantaged Business Concerns or (2) Small Business and Small Disadvantaged Business Subcontracting Plan, when applicable, will be a material breach of contract. In order to assist contractors in developing a source list of small and/or small disadvantaged business concerns you are encouraged to contact your minority contractor associates, the local Minority Business Development Agency and the appropriate General Business Service Centers in your Standard Metropolitan Statistical Area. Contractors may obtain addresses of these sources from:

Write: US Army Engineer District, Los Angeles
ATTN: Contracting Office, Deputy for Small Business
P.O. Box 2711
Los Angeles, California 90053-2325

Or Contact: Mr. Daniel Hanas
Deputy for Small Business
Telephone: (213) 452-3839

9. FAR 52.223-14 TOXIC CHEMICAL RELEASE REPORTING (OCT 1996)

(a) Unless otherwise exempt, the Contractor as owner or operator of a facility used in the performance of this contract shall file by July 1 for the prior calendar year an annual Toxic Chemical Release Inventory Form (Form R) as described in sections 313(a) and (g) of the Emergency Planning and Community Right-to-Know Act of 1986 (EPCRA)(42 U.S.C. 11023(a) and (g)), and section 6607 of the Pollution Prevention Act of 1990 (PPA) (42 U.S.C. 13106). The Contractor shall file, for each facility subject to the Form R filing and reporting requirements, the annual Form R throughout the life of the contract.

(b) A Contractor owned or operated facility used in the performance of this contract is exempt from the requirement to file an annual Form R if --

(1) The facility does not manufacture, process, or otherwise use any toxic chemicals listed under section 313(c) of EPCRA, 42 U.S.C. 11023(c);

(2) The facility does not have 10 or more full-time employees as specified in section 313(b)(1)(A) of EPCRA, 42 U.S.C. 11023(b)(1)(A);

(3) The facility does not meet the reporting thresholds of toxic chemicals established under section 313(f) of EPCRA, 42 U.S.C. 11023(f) (including the alternate thresholds at 40 CFR 372.27, provided an appropriate certification form has been filed with EPA);

(4) The facility does not fall within Standard Industrial Classification Code (SIC) designations 20 through 39 as set forth in 19.102 of the Federal Acquisition Regulation (FAR); or

(5) The facility is not located within any State of the United States, the District of Columbia, the Commonwealth of Puerto Rico, Guam, American Samoa, the United States Virgin Islands, the Northern Mariana Islands, or any other territory or possession over which the United States has jurisdiction.

(c) If the Contractor has certified to be exempt in accordance with one or more of the criteria in paragraph (b) of this clause, and after award of the contract circumstances change so that any one of its owned or operated facilities used in the performance of this contract is no longer exempt--

(1) The Contractor shall notify the Contracting Officer, and

(2) The Contractor, as owner or operator of a facility used in the performance of this contract that is no longer exempt, shall (i) submit a Toxic Chemical Release Inventory Form (Form R) on or before July 1 for the prior calendar year during which the Contractor becomes eligible; and (ii) continue to file the annual Form R for the life of the contract for such facility.

(d) The Contracting Officer may terminate this contract or take other action as appropriate, if the Contractor fails to comply accurately and fully with the EPCRA and PPA toxic chemical release filing and reporting requirements.

(e) Except for acquisitions for commercial items, as defined in FAR Part 2, the Contractor shall--

(1) For competitive subcontracts expected to exceed $100,000 (including all options), include a solicitation provision substantially the same as the provision at FAR 52.223-13, Certification of Toxic Chemical Release Reporting; and

(2) Include in any resultant subcontract exceeding $100,000 (including all options), the substance of this clause, except this paragraph (e).

10. DFARS 252.223-7006 PROHIBITION ON STORAGE AND DISPOSAL OF TOXIC AND HAZARDOUS MATERIALS (APR 1993)

(a) Definitions. As used in this clause--

(1) "Storage" means a non-transitory, semi-permanent or permanent holding, placement, or leaving of material. It does not include a temporary accumulation of a limited quantity of a material used in or a waste generated

or resulting from authorized activities, such as servicing, maintenance, or repair of Department of Defense (DoD) items, equipment, or facilities.

(2) "Toxic or hazardous materials" means:

(i) Materials referred to in section 101(14) of the Comprehensive Environmental Response, Compensation, and Liability Act (CERCLA) of 1980 (42 U.S.C. 9601(14)) and materials designated under section 102 of CERCLA (42. U.S.C. 9602 (40 CFR Part 302);

(ii) Materials that are of an explosive, flammable, or pyrotechnic nature; or

(iii) Materials otherwise identified by the Secretary of Defense as specified in DoD regulations.

(b) In accordance with 10 U.S.C. 2692, the Contractor is prohibited from storing or disposing of non-DoD-owned toxic or hazardous materials on a DoD installation, except to the extent authorized by a statutory exception to 10 U.S.C. 2692 or as authorized by the Secretary of Defense or his designee.

11. SAACONS 52.0223-4803 HAZARDOUS MATERIALS DELIVERED UNDER THIS CONTRACT (MAY 1993)

(a) If any hazardous materials will be delivered under this contract (see Section 00600, FAR 52.223-3, and DFARS 252.223-7001), the Material Safety Data Sheets (MSDS) for locally purchased, nonstandard stock hazardous material will be submitted to the Corps of Engineers Contracting Officer or Contracting Officer's Representative. For all other materials, the MSDS will also be submitted to U.S. Army Environmental Hygiene Agency, ATTN: HSE-OI, Aberdeen Proving Grounds MD 21010.

(b) Hazardous material is defined in Federal Standard No. 313, sold by the General Services Administration Specifications Unit (3FBP-W), 7th & D Streets, SW, Washington DC 20407.

12. FAR 52.228-5 INSURANCE--WORK ON A GOVERNMENT INSTALLATION (JAN 1997)

(a) The Contractor shall, at its own expense, provide and maintain during the entire performance of this contract, at least the kinds and minimum amounts of insurance required in the Schedule or elsewhere in the contract.

(b) Before commencing work under this contract, the Contractor shall certify to the Contracting Officer in writing that the required insurance has been obtained. The policies evidencing required insurance shall contain an endorsement to the effect that any cancellation or any material change adversely affecting the Government's interest shall not be effective (1) for such period as the laws of the State in which this contract is to be performed prescribe, or (2) until 30 days after the insurer or the Contractor gives written notice to the Contracting Officer, whichever period is longer.

(c) The Contractor shall insert the substance of this clause, including this paragraph (c), in subcontracts under this contract that require work on a Government installation and shall require subcontractors to provide and maintain the insurance required in the Schedule or elsewhere in the contract. The Contractor shall maintain a copy of all subcontractors' proofs of required insurance, and shall make copies available to the Contracting Officer upon request.

13. SAACONS 52.0228-4502 MINIMUM INSURANCE REQUIRED (MAY 1993)

The contract clause, FAR 52.228-5, applies to this contract even if the work or any portion of the work is not performed on a Government installation. In accordance with FAR 52.228-5 and FAR 28.307-2, the contractor shall procure

and thereafter maintain during the entire period of this performance under this contract the following minimum insurance.

TYPE	AMOUNT
Worker's Compensation and Employer's Liability	Comply with Federal and State worker's comp and occupational disease statutes. Employer's liability of at least $100,000
General Liability (Comprehensive)	Bodily injury liability of at least $500,000 per occurrence.
Automobile Liability (Comprehensive):	
Bodily Injury & Property Damage	At least $200,000 per person and $500,000 per occurrence. At least $20,000 per occurrence.
Longshoremen's and Harbor Worker's Compensation (When applicable by location of contract performance)	Coverage complying with applicable Federal statute (33 USC 901 et seq).

14. EFARS 52.231-5000 EQUIPMENT OWNERSHIP AND OPERATING EXPENSE SCHEDULE (MAR 1995)--EFARS

(a) This statement shall become operative only for negotiated contracts where cost or pricing data is requested, and for modifications to sealed bid or negotiated contracts where cost or pricing data is requested. This clause does not apply to terminations. See 52.249-5000, Basis for Settlement of Proposals, and FAR Part 49.

(b) Allowable cost for CONSTRUCTION and marine plant and equipment in sound workable condition owned or controlled and furnished by a contractor or subcontractor at any tier shall be based on actual cost data for each piece of equipment or groups of similar serial and series for which the Government can determine both ownership and operating costs from the contractor's accounting records. When both ownership and operating costs cannot be determined for any piece of equipment or groups of similar serial or series equipment from the contractor's accounting records, costs for that equipment shall be based upon the applicable provisions of EP 1110-1-8, CONSTRUCTION Equipment Ownership and Operating Expense Schedule, Region VII. Working conditions shall be considered to be average for determining equipment rates using the schedule unless specified otherwise by the contracting officer. For equipment not included in the schedule, rates for comparable pieces of equipment may be used or a rate may be developed using the formula provided in the schedule. For forward pricing, the schedule in effect at the time of negotiations shall apply. For retroactive pricing, the schedule in effect at the time the work was performed shall apply.

(c) Equipment rental costs are allowable, subject to the provisions of FAR 31.105(d)(ii) and FAR 31.205-36. Rates for equipment rented from an organization under common control, lease-purchase arrangements, and sale-leaseback arrangements, will be determined using the schedule, except that actual rates will be used for equipment leased from an organization under common control that has an established practice of leasing the same or similar equipment to unaffiliated lessees.

(d) When actual equipment costs are proposed and the total amount of the pricing action exceeds the small purchase threshold, the contracting officer shall request the contractor to submit either certified cost or pricing data, or partial/limited data, as appropriate. The data shall be submitted on Standard Form 1411, Contract Pricing Proposal Cover Sheet.

NOTE: See also, Specification Section 01500. A copy of the EP 1110-1-8 is available for review in the Corps of Engineers, Sacramento District Office, 1325 J Street, Library, 8th floor, telephone (916) 557-6657. Copies are available for a nominal charge from the Government Printing Office, telephone (202) 783-3238.

15. FAR 52.232-27 PROMPT PAYMENT FOR CONSTRUCTION CONTRACTS (JUN 1997)

Notwithstanding any other payment terms in this contract, the Government will make invoice payments and contract financing payments under the terms and conditions specified in this clause. Payment shall be considered as being made on the day a check is dated or the date of an electronic funds transfer. Definitions of pertinent terms are set forth in section 32.902 of the Federal Acquisition Regulation. All days referred to in this clause are calendar days, unless otherwise specified. (However, see subparagraph (a)(3) concerning payments due on Saturdays, Sundays, and legal holidays.)

(a) *Invoice payments*--

(1) *Types of invoice payments*. For purposes of this clause, there are several types of invoice payments that may occur under this contract, as follows:

(i) Progress payments, if provided for elsewhere in this contract, based on Contracting Officer approval of the estimated amount and value of work or services performed, including payments for reaching milestones in any project:

(A) The due date for making such payments shall be 14 days after receipt of the payment request by the designated billing office. If the designated billing office fails to annotate the payment request with the actual date of receipt at the time of receipt, the payment due date shall be the 14th day after the date of the Contractor's payment request, provided a proper payment request is received and there is no disagreement over quantity, quality, or Contractor compliance with contract requirements.

(B) The due date for payment of any amounts retained by the Contracting Officer in accordance with the clause at 52.232-5, Payments Under Fixed-Price Construction Contracts, shall be as specified in the contract or, if not specified, 30 days after approval for release to the Contractor by the Contracting Officer.

(ii) Final payments based on completion and acceptance of all work and presentation of release of all claims against the Government arising by virtue of the contract, and payments for partial deliveries that have been accepted by the Government (*e.g.*, each separate building, public work, or other division of the contract for which the price is stated separately in the contract):

(A) The due date for making such payments shall be either the 30th day after receipt by the designated billing office of a proper invoice from the Contractor, or the 30th day after Government acceptance of the work or services completed by the Contractor, whichever is later. If the designated billing office fails to annotate the invoice with the date of actual receipt at the time of receipt, the invoice payment due date shall be the 30th day after the date of the Contractor's invoice, provided a proper invoice is

received and there is no disagreement over quantity, quality, or Contractor compliance with contract requirements.

(B) On a final invoice where the payment amount is subject to contract settlement actions (*e.g.*, release of claims), acceptance shall be deemed to have occurred on the effective date of the contract settlement.

(2) *Contractor's invoice*. The Contractor shall prepare and submit invoices to the designated billing office specified in the contract. A proper invoice must include the items listed in subdivisions (a)(2)(i) through (a)(2)(ix) of this clause. If the invoice does not comply with these requirements, it shall be returned within 7 days after the date the designated billing office received the invoice, with a statement of the reasons why it is not a proper invoice. Untimely notification will be taken into account in computing any interest penalty owed the Contractor in the manner described in subparagraph (a)(4) of this clause.

(i) Name and address of the Contractor.

(ii) Invoice date. (The Contractor is encouraged to date invoices as close as possible to the date of mailing or transmission.)

(iii) Contract number or other authorization for work or services performed (including order number and contract line item number).

(iv) Description of work or services performed.

(v) Delivery and payment terms (*e.g.*, prompt payment discount terms).

(vi) Name and address of Contractor official to whom payment is to be sent (must be the same as that in the contract or in a proper notice of assignment).

(vii) Name (where practicable), title, phone number, and mailing address of person to be notified in the event of a defective invoice.

(viii) For payments described in subdivision (a)(1)(i) of this clause, substantiation of the amounts requested and certification in accordance with the requirements of the clause at 52.232-5, Payments Under Fixed-Price Construction Contracts.

(ix) Any other information or documentation required by the contract.

(x) While not required, the Contractor is strongly encouraged to assign an identification number to each invoice.

(3) *Interest penalty*. An interest penalty shall be paid automatically by the designated payment office, without request from the Contractor, if payment is not made by the due date and the conditions listed in subdivisions (a)(3)(i) through (a)(3)(iii) of this clause are met, if applicable. However, when the due date falls on a Saturday, Sunday, or legal holiday when Federal Government offices are closed and Government business is not expected to be conducted, payment may be made on the following business day without incurring a late payment interest penalty.

(i) A proper invoice was received by the designated billing office.

(ii) A receiving report or other Government documentation authorizing payment was processed and there was no disagreement over quantity, quality, Contractor compliance with any contract term or condition, or requested progress payment amount.

(iii) In the case of a final invoice for any balance of funds due the Contractor for work or services performed, the amount was not subject to further contract settlement actions between the Government and the Contractor.

(4) *Computing penalty amount*. The interest penalty shall be at the rate established by the Secretary of the Treasury under section 12 of the Contract Disputes Act of 1978 (41 U.S.C. 611) that is in effect on the day after the due date, except where the interest penalty is prescribed by other governmental authority (*e.g.*, tariffs). This rate is referred to as the "Renegotiation Board Interest Rate," and it is published in the *Federal Register* semiannually on or about January 1 and July 1. The interest penalty shall accrue daily on the invoice principal payment amount approved by the

Government until the payment date of such approved principal amount; and will be compounded in 30-day increments inclusive from the first day after the due date through the payment date. That is, interest accrued at the end of any 30-day period will be added to the approved invoice principal payment amount and will be subject to interest penalties if not paid in the succeeding 30-day period. If the designated billing office failed to notify the Contractor of a defective invoice within the periods prescribed in subparagraph (a)(2) of this clause, the due date on the corrected invoice will be adjusted by subtracting from such date the number of days taken beyond the prescribed notification of defects period. Any interest penalty owed the Contractor will be based on this adjusted due date. Adjustments will be made by the designated payment office for errors in calculating interest penalties.

(i) For the sole purpose of computing an interest penalty that might be due the Contractor for payments described in subdivision (a)(1)(ii) of this clause, Government acceptance or approval shall be deemed to have occurred constructively on the 7th day after the Contractor has completed the work or services in accordance with the terms and conditions of the contract. In the event that actual acceptance or approval occurs within the constructive acceptance or approval period, the determination of an interest penalty shall be based on the actual date of acceptance or approval. Constructive acceptance or constructive approval requirements do not apply if there is a disagreement over quantity, quality, or Contractor compliance with a contract provision. These requirements also do not compel Government officials to accept work or services, approve Contractor estimates, perform contract administration functions, or make payment prior to fulfilling their responsibilities.

(ii) The following periods of time will not be included in the determination of an interest penalty:

(A) The period taken to notify the Contractor of defects in invoices submitted to the Government, but this may not exceed 7 days.

(B) The period between the defects notice and resubmission of the corrected invoice by the Contractor.

(C) For incorrect electronic funds transfer (EFT) information, in accordance with the EFT clause of this contract.

(iii) Interest penalties will not continue to accrue after the filing of a claim for such penalties under the clause at 52.233-1, Disputes, or for more than 1 year. Interest penalties of less than $1 need not be paid.

(iv) Interest penalties are not required on payment delays due to disagreement between the Government and the Contractor over the payment amount or other issues involving contract compliance, or on amounts temporarily withheld or retained in accordance with the terms of the contract. Claims involving disputes, and any interest that may be payable, will be resolved in accordance with the clause at 52.233-1, Disputes.

(5) *Prompt payment discounts*. An interest penalty also shall be paid automatically by the designated payment office, without request from the Contractor, if a discount for prompt payment is taken improperly. The interest penalty will be calculated on the amount of discount taken for the period beginning with the first day after the end of the discount period through the date when the Contractor is paid.

(6) *Additional interest penalty*. (i) A penalty amount, calculated in accordance with subdivision (a)(6)(iii) of this clause, shall be paid in addition to the interest penalty amount if the Contractor--

(A) Is owed an interest penalty of $1 or more;

(B) Is not paid the interest penalty within 10 days after the date the invoice amount is paid; and

(C) Makes a written demand to the designated payment office for additional penalty payment, in accordance with subdivision (a)(6)(ii) of this

clause, postmarked not later than 40 days after the date the invoice amount is paid.

(ii)(A) Contractors shall support written demands for additional penalty payments with the following data. No additional data shall be required. Contractors shall--

(*1*) Specifically assert that late payment interest is due under a specific invoice, and request payment of all overdue late payment interest penalty and such additional penalty as may be required;

(*2*) Attach a copy of the invoice on which the unpaid late payment interest was due; and

(*3*) State that payment of the principal has been received, including the date of receipt.

(B) Demands must be postmarked on or before the 40th day after payment was made, except that--

(*1*) If the postmark is illegible or nonexistent, the demand must have been received and annotated with the date of receipt by the designated payment office on or before the 40th day after payment was made; or

(*2*) If the postmark is illegible or nonexistent and the designated payment office fails to make the required annotation, the demand's validity will be determined by the date the Contractor has placed on the demand; provided such date is no later than the 40th day after payment was made.

(iii)(A) The additional penalty shall be equal to 100 percent of any original late payment interest penalty except--

(*1*) The additional penalty shall not exceed $5,000;

(*2*) The additional penalty shall never be less than $25; and

(*3*) No additional penalty is owed if the amount of the underlying interest penalty is less than $1.

(B) If the interest penalty ceases to accrue in accordance with the limits stated in subdivision (a)(4)(iii) of this clause, the amount of the additional penalty shall be calculated on the amount of interest penalty that would have accrued in the absence of these limits, subject to the overall limits on the additional penalty specified in subdivision (a)(6)(iii)(A) of this clause.

(C) For determining the maximum and minimum additional penalties, the test shall be the interest penalty due on each separate payment made for each separate contract. The maximum and minimum additional penalty shall not be based upon individual invoices unless the invoices are paid separately. Where payments are consolidated for disbursing purposes, the maximum and minimum additional penalty determination shall be made separately for each contract therein.

(D) The additional penalty does not apply to payments regulated by other Government regulations (*e.g.*, payments under utility contracts subject to tariffs and regulation).

(b) *Contract financing payments*--(1) *Due dates for recurring financing payments*. If this contract provides for contract financing, requests for payment shall be submitted to the designated billing office as specified in this contract or as directed by the Contracting Officer. Contract financing payments shall be made on the [*insert day as prescribed by Agency head; if not prescribed, insert 30th day*] day after receipt of a proper contract financing request by the designated billing office. In the event that an audit or other review of a specific financing request is required to ensure compliance with the terms and conditions of the contract, the designated payment office is not compelled to make payment by the due date specified.

(2) *Due dates for other contract financing*. For advance payments, loans, or other arrangements that do not involve recurring submissions of contract financing requests, payment shall be made in accordance with the corresponding contract terms or as directed by the Contracting Officer.

(3) *Interest penalty not applicable*. Contract financing payments shall not be assessed an interest penalty for payment delays.

(c) *Subcontract clause requirements*. The Contractor shall include in each subcontract for property or services (including a material supplier) for the purpose of performing this contract the following:

(1) *Prompt payment for subcontractors*. A payment clause that obligates the Contractor to pay the subcontractor for satisfactory performance under its subcontract not later than 7 days from receipt of payment out of such amounts as are paid to the Contractor under this contract.

(2) *Interest for subcontractors*. An interest penalty clause that obligates the Contractor to pay to the subcontractor an interest penalty for each payment not made in accordance with the payment clause--

(i) For the period beginning on the day after the required payment date and ending on the date on which payment of the amount due is made; and

(ii) Computed at the rate of interest established by the Secretary of the Treasury, and published in the *Federal Register*, for interest payments under section 12 of the Contract Disputes Act of 1978 (41 U.S.C. 611) in effect at the time the Contractor accrues the obligation to pay an interest penalty.

(3) *Subcontractor clause flowdown*. A clause requiring each subcontractor to include a payment clause and an interest penalty clause conforming to the standards set forth in subparagraphs (c)(1) and (c)(2) of this clause in each of its subcontracts, and to require each of its subcontractors to include such clauses in their subcontracts with each lower-tier subcontractor or supplier.

(d) *Subcontract clause interpretation*. The clauses required by paragraph (c) of this clause shall not be construed to impair the right of the Contractor or a subcontractor at any tier to negotiate, and to include in their subcontract, provisions that--

(1) *Retainage permitted*. Permit the Contractor or a subcontractor to retain (without cause) a specified percentage of each progress payment otherwise due to a subcontractor for satisfactory performance under the subcontract without incurring any obligation to pay a late payment interest penalty, in accordance with terms and conditions agreed to by the parties to the subcontract, giving such recognition as the parties deem appropriate to the ability of a subcontractor to furnish a performance bond and a payment bond;

(2) *Withholding permitted*. Permit the Contractor or subcontractor to make a determination that part or all of the subcontractor's request for payment may be withheld in accordance with the subcontract agreement; and

(3) *Withholding requirements*. Permit such withholding without incurring any obligation to pay a late payment penalty if--

(i) A notice conforming to the standards of paragraph (g) of this clause previously has been furnished to the subcontractor; and

(ii) A copy of any notice issued by a Contractor pursuant to subdivision (d)(3)(i) of this clause has been furnished to the Contracting Officer.

(e) *Subcontractor withholding procedures*. If a Contractor, after making a request for payment to the Government but before making a payment to a subcontractor for the subcontractor's performance covered by the payment request, discovers that all or a portion of the payment otherwise due such subcontractor is subject to withholding from the subcontractor in accordance with the subcontract agreement, then the Contractor shall--

(1) *Subcontractor notice*. Furnish to the subcontractor a notice conforming to the standards of paragraph (g) of this clause as soon as practicable upon ascertaining the cause giving rise to a withholding, but prior to the due date for subcontractor payment;

(2) *Contracting Officer notice*. Furnish to the Contracting Officer, as soon as practicable, a copy of the notice furnished to the subcontractor pursuant to subparagraph (e)(1) of this clause;

(3) *Subcontractor progress payment reduction*. Reduce the subcontractor's progress payment by an amount not to exceed the amount specified in the notice of withholding furnished under subparagraph (e)(1) of this clause;

(4) *Subsequent subcontractor payment*. Pay the subcontractor as soon as practicable after the correction of the identified subcontract performance deficiency, and--

(i) Make such payment within--

(A) Seven days after correction of the identified subcontract performance deficiency (unless the funds therefor must be recovered from the Government because of a reduction under subdivision (e)(5)(i)) of this clause; or

(B) Seven days after the Contractor recovers such funds from the Government; or

(ii) Incur an obligation to pay a late payment interest penalty computed at the rate of interest established by the Secretary of the Treasury, and published in the *Federal Register*, for interest payments under section 12 of the Contracts Disputes Act of 1978 (41 U.S.C. 611) in effect at the time the Contractor accrues the obligation to pay an interest penalty;

(5) *Notice to Contracting Officer*. Notify the Contracting Officer upon--

(i) Reduction of the amount of any subsequent certified application for payment; or

(ii) Payment to the subcontractor of any withheld amounts of a progress payment, specifying--

(A) The amounts withheld under subparagraph (e)(1) of this clause; and

(B) The dates that such withholding began and ended; and

(6) *Interest to Government*. Be obligated to pay to the Government an amount equal to interest on the withheld payments (computed in the manner provided in 31 U.S.C. 3903(c)(1)), from the 8th day after receipt of the withheld amounts from the Government until--

(i) The day the identified subcontractor performance deficiency is corrected; or

(ii) The date that any subsequent payment is reduced under subdivision (e)(5)(i) of this clause.

(f) *Third-party deficiency reports*--(1) *Withholding from subcontractor*. If a Contractor, after making payment to a first-tier subcontractor, receives from a supplier or subcontractor of the first-tier subcontractor (hereafter referred to as a "second-tier subcontractor") a written notice in accordance with section 2 of the Act of August 24, 1935 (40 U.S.C. 270b, Miller Act), asserting a deficiency in such first-tier subcontractor's performance under the contract for which the Contractor may be ultimately liable, and the Contractor determines that all or a portion of future payments otherwise due such first-tier subcontractor is subject to withholding in accordance with the subcontract agreement, the Contractor may, without incurring an obligation to pay an interest penalty under subparagraph (e)(6) of this clause--

(i) Furnish to the first-tier subcontractor a notice conforming to the standards of paragraph (g) of this clause as soon as practicable upon making such determination; and

(ii) Withhold from the first-tier subcontractor's next available progress payment or payments an amount not to exceed the amount specified in the notice of withholding furnished under subdivision (f)(1)(i) of this clause.

(2) *Subsequent payment or interest charge*. As soon as practicable, but not later than 7 days after receipt of satisfactory written notification that the identified subcontract performance deficiency has been corrected, the Contractor shall--

(i) Pay the amount withheld under subdivision (f)(1)(ii) of this clause to such first-tier subcontractor; or

(ii) Incur an obligation to pay a late payment interest penalty to such first-tier subcontractor computed at the rate of interest established by the

Secretary of the Treasury, and published in the *Federal Register*, for interest payments under section 12 of the Contracts Disputes Act of 1978 (41 U.S.C. 611) in effect at the time the Contractor accrues the obligation to pay an interest penalty.

(g) *Written notice of subcontractor withholding*. A written notice of any withholding shall be issued to a subcontractor (with a copy to the Contracting Officer of any such notice issued by the Contractor), specifying--

(1) The amount to be withheld;

(2) The specific causes for the withholding under the terms of the subcontract; and

(3) The remedial actions to be taken by the subcontractor in order to receive payment of the amounts withheld.

(h) *Subcontractor payment entitlement*. The Contractor may not request payment from the Government of any amount withheld or retained in accordance with paragraph (d) of this clause until such time as the Contractor has determined and certified to the Contracting Officer that the subcontractor is entitled to the payment of such amount.

(i) *Prime-subcontractor disputes*. A dispute between the Contractor and subcontractor relating to the amount or entitlement of a subcontractor to a payment or a late payment interest penalty under a clause included in the subcontract pursuant to paragraph (c) of this clause does not constitute a dispute to which the United States is a party. The United States may not be interpleaded in any judicial or administrative proceeding involving such a dispute.

(j) *Preservation of prime-subcontractor rights*. Except as provided in paragraph (i) of this clause, this clause shall not limit or impair any contractual, administrative, or judicial remedies otherwise available to the Contractor or a subcontractor in the event of a dispute involving late payment or nonpayment by the Contractor or deficient subcontract performance or nonperformance by a subcontractor.

(k) *Non-recourse for prime contractor interest penalty*. The Contractor's obligation to pay an interest penalty to a subcontractor pursuant to the clauses included in a subcontract under paragraph (c) of this clause shall not be construed to be an obligation of the United States for such interest penalty. A cost-reimbursement claim may not include any amount for reimbursement of such interest penalty.

16. DFARS 252.232-7006 REDUCTION OR SUSPENSION OF CONTRACT PAYMENTS UPON FINDING OF FRAUD (AUG 1992)

(a) 10 U.S.C. 2307(e) permits the head of the agency to reduce or suspend further payments upon a written determination by the agency head that substantial evidence exists that the Contractor's request for advance, partial, or progress payments is based on fraud. The provisions of 10 U.S.C. 2307(e) are in addition to any other rights or remedies provided the Government by law or under contract.

(b) Actions taken by the Government in accordance with 10 U.S.C. 2307(e) shall not constitute an excusable delay under the Default clause of this contract or otherwise relieve the Contractor of its obligations to perform under this contract.

17. SAACONS 52.0232-4501 INVOICES (AUG 1991)

The Government shall pay the Contractor upon submission of proper invoices for supplies delivered and accepted or services rendered and accepted for the portion of work actually performed under this contract. Invoices will be submitted in quadruplicate to the address in Block 26, SF1442, which will

be completed at time of award. Invoices shall be submitted on ENG Form 93 which will be provided to the Contractor by the Government

18. FAR 52.236-1 PERFORMANCE OF WORK BY THE CONTRACTOR (APR 1984)

The Contractor shall perform on the site, and with its own organization, work equivalent to at least twenty percent of the total amount of work to be performed under the contract. This percentage may be reduced by a supplemental agreement to this contract if, during performing the work, the Contractor requests a reduction and the Contracting Officer determines that the reduction would be to the advantage of the Government.

19. FAR 52.236-4 PHYSICAL DATA (APR 1984)

Data and information furnished or referred to below is for the Contractor's information. The Government shall not be responsible for any interpretation of or conclusion drawn from the data or information by the Contractor.

(a) The indications of physical conditions on the drawings and in the specifications are the result of site investigations by the Government.

(b) Weather conditions: The Contractor shall satisfy himself/herself as to the hazards likely to arise from weather conditions. Complete weather records and reports may be obtained from any U.S. Weather Bureau Office.

(c) Transportation Facilities: The Southern Pacific Company serves the Government sidings along Utah Avenue between Washington and Nebraska Avenues. The Contractor will be permitted to use one of these sidings for delivery of materials and equipment to the work. The Contractor shall make his/her own investigations of the condition of available public and base roads and of the clearances, restrictions, bridge load limits, and other limitations affecting transportation and ingress and egress at the site of the work. It shall be the Contractor's responsibility to construct and maintain, at Contractor's expense, any haul roads required for construction operations.

20. DFARS 252.236-7001 CONTRACT DRAWINGS, MAPS, AND SPECIFICATIONS (DEC 1991)

(a) The Government--

(1) Will provide the Contractor, without charge, one set of large-scale contract drawings and specifications except publications incorporated into the technical provisions by reference;

(2) Will furnish additional sets on request, for the cost of reproduction; and

(3) May, at its option, furnish the Contractor one set of reproducibles, or half-size drawings, in lieu of the drawings in paragraph (a)(1) of this clause.

(b) The Contractor shall--

(1) Check all drawings furnished immediately upon receipt;

(2) Compare all drawings and verify the figures before laying out the work;

(3) Promptly notify the Contracting Officer of any discrepancies; and

(4) Be responsible for any errors which might have been avoided by complying with this paragraph (b).

(c) Large scale drawings shall, in general, govern small scale drawings. Figures marked on drawings shall, in general, be followed in preference to scale measurements.

(d) Omissions from the drawings or specifications or the misdescription of details of work which are manifestly necessary to carry out the intent of the drawings and specifications, or which are customarily performed, shall not

relieve the Contractor from performing such omitted or misdescribed details of the work, but shall be performed as if fully and correctly set forth and described in the drawings and specifications.

(e) The work shall conform to the specifications and the contract drawings identified on the following index of drawings:

Drawing File No.

221-25-1157

Sheet No.	Description	Rev. No.
G-1	TITLE SHEET, VICINITY MAP, LOCATION MAP, AND DRAWING INDEX	
G-2	LOG OF EXPLORATIONS	
G-3	LOG OF EXPLORATIONS	
C-1	SITE GRADING AND UTILITY PLAN	
C-2	DETAILS	
A-1	FLOOR PLAN, SYMBOLS, ABBREVIATIONS, DOOR SCHEDULE	
A-2	DOOR TYPES, INTERIOR FINISH SCHEDULES	
A-3	REFLECTED CEILING PLAN, ROOF PLAN, DETAILS	
A-4	BUILDING ELEVATIONS, BUILDING SECTIONS, WALL SECTIONS	
A-5	BATHROOM PLAN, INTERIOR ELEVATIONS	
A-6	INTERIOR ELEVATIONS	
A-7	DOOR DETAILS	
A-8	DOOR DETAILS, WINDOW DETAILS	
A-9	MISCELLANEOUS DETAILS	
A-10	MISCELLANEOUS DETAILS,WALL DETAILS, WALL TYPE SYMBOLS, HANDICAP SIGNAGE	
S-1	FOUNDATION PLAN, DETAILS, GENERAL NOTES	
S-2	ROOF FRAMING PLAN, DETAILS	
S-3	TYPICAL CONCRETE, CMU DETAILS	
S-4	SECTIONS, DETAILS	
M-1	LEGEND, ABBREVIATIONS, FLOOR PLANS, DETAILS	
M-2	SCHEDULES, DETAILS	
P-1	LEGEND, ABBREVIATIONS, FLOOR PLANS, DETAILS	
E-1	LEGEND, ABBREVIATIONS, FLOOR PLANS	
E-2	DETAILS	
E-3	DIAGRAMS, SCHEDULES	

STANDARD DRAWINGS

(Attached to SPECIFICATION SECTION: TEMPORARY CONSTRUCTION FACILITIES)

Project Sign	150-52-1162
Sign Details	150-25-1232
Safety Sign	80-25-707
Hard Hat Sign	80-25-774

21. SAACONS 52.0236-4801 SALVAGE AND SCRAP GOVERNMENT PROPERTY (OCT 1993)

(a) "Government property" means all property owned by or leased to the Government or acquired by the Government under the terms of the contract. It includes both Government-furnished property and contractor-acquired property.

(b) "Salvage" means Government property in possession of a contractor, including subcontractors, that, because of its worn, damaged, deteriorated, or incomplete condition or specialized nature, has no reasonable prospect of sale or use as serviceable property without major repairs, but has some value in excess of its scrap value.

(c) "Scrap" means Government personal property that has no value except for its basic material content.

(d) In accordance with FAR 45.505-8 the Contractor shall maintain records of all scrap and salvage generated from this contract. The Contractor's records shall contain the following information:

(1) Contract Number

(2) Description of salvageable items or classification (material content) of scrap

(3) Quantity on hand

(e) The Contractor shall provide final accounting and disposition recommendations of all Government property not consumed in performing this contract or delivered to the Government including salvage and scrap. The Government will review the Contractor's records and shall cause correction if the Government disagrees with the classification of items as salvage or scrap. The Contractor shall dispose of the items as directed by the Contracting Officer. Items designated as scrap (agreed to by the Contracting Officer) shall be retained by the Contractor; its disposition shall be the responsibility of the Contractor. See Specification Section 01500, paragraph entitled "Scrap Material". Items designated as salvageable items (agreed to by the Contracting Officer) shall be turned over to the Government.

22. SAACONS 52.0236-4581 AVAILABILITY OF UTILITIES SERVICES (APR 1992)

All reasonably required amounts of water, electricity, and other utilities essential to contract performance will be made available to the contractor at no cost to the contractor from existing systems, outlets and supplies. All temporary connections, outlets and distribution lines, as may be required, shall be installed, maintained and removed by the Contractor at Contractor's expense; removal shall be before final acceptance of the work by the Government. The Contractor shall carefully conserve any utilities furnished without charge.

23. SAACONS 52.0236-4901 PARTNERING (MAR 1992)

The Government intends to encourage the foundation of a cohesive partnership with the Contractor and its subcontractors. This partnership will be structured to draw on the strengths of each organization to identify and achieve reciprocal goals. The objectives are effective and efficient contract performance and intended to achieve completion within budget, on schedule, and in accordance with plans and specifications. This partnership would be bilateral in makeup, and participation will be totally voluntary. Any costs associated with effectuating this partnership will be agreed to by both parties and will be shared equally with no change in contract price. To implement this partnership initiative it is anticipated that within 60 days of Notice to Proceed the Contractor's on-site project manager and the Government's Resident Engineer would attend a one or two-day partnership development seminar/team building workshop together with the Contractor's key on-site staff and key Government personnel. Follow-up workshops of 1 or 2 days duration would be held periodically throughout the duration of the contract as agreed to by the Contractor and the Government.

24. FAR 52.246-12 INSPECTION OF CONSTRUCTION (AUG 1996)

(a) Definition. "Work" includes, but is not limited to, materials, workmanship, and manufacture and fabrication of components.

(b) The Contractor shall maintain an adequate inspection system and perform such inspections as will ensure that the work performed under the contract conforms to contract requirements. The Contractor shall maintain complete inspection records and make them available to the Government. All work shall be conducted under the general direction of the Contracting Officer and is subject to Government inspection and test at all places and at all reasonable times before acceptance to ensure strict compliance with the terms of the contract.

(c) Government inspections and tests are for the sole benefit of the Government and do not--

(1) Relieve the Contractor of responsibility for providing adequate quality control measures;

(2) Relieve the Contractor of responsibility for damage to or loss of the material before acceptance;

(3) Constitute or imply acceptance; or

(4) Affect the continuing rights of the Government after acceptance of the completed work under paragraph (i) below.

(d) The presence or absence of a Government inspector does not relieve the Contractor from any contract requirement, nor is the inspector authorized to change any term or condition of the specification without the Contracting Officer's written authorization.

(e) The Contractor shall promptly furnish, at no increase in contract price, all facilities, labor, and material reasonably needed for performing such safe and convenient inspections and tests as may be required by the Contracting Officer. The Government may charge to the Contractor any additional cost of inspection or test when work is not ready at the time specified by the Contractor for inspection or test, or when prior rejection makes reinspection or retest necessary. The Government shall perform all inspections and tests in a manner that will not unnecessarily delay the work. Special, full size, and performance tests shall be performed as described in the contract.

(f) The Contractor shall, without charge, replace or correct work found by the Government not to conform to contract requirements, unless in the public interest the Government consents to accept the work with an appropriate adjustment in contract price. The Contractor shall promptly segregate and remove rejected material from the premises.

(g) If the Contractor does not promptly replace or correct rejected work, the Government may (1) by contract or otherwise, replace or correct the work and charge the cost to the Contractor or (2) terminate for default the Contractor's right to proceed.

(h) If, before acceptance of the entire work, the Government decides to examine already completed work by removing it or tearing it out, the Contractor, on request, shall promptly furnish all necessary facilities, labor, and material. If the work is found to be defective or nonconforming in any material respect due to the fault of the Contractor or its subcontractors, the Contractor shall defray the expenses of the examination and of satisfactory reconstruction. However, if the work is found to meet contract requirements, the Contracting Officer shall make an equitable adjustment for the additional services involved in the examination and reconstruction, including, if completion of the work was thereby delayed, an extension of time.

(i) Unless otherwise specified in the contract, the Government shall accept, as promptly as practicable after completion and inspection, all work required by the contract or that portion of the work the Contracting Officer

determines can be accepted separately. Acceptance shall be final and conclusive except for latent defects, fraud, gross mistakes amounting to fraud, or the Government's rights under any warranty or guarantee.

25. FAR 52.219-9 I SMALL, SMALL DISADVANTAGED AND WOMEN-OWNED SMALL BUSINESS SUBCONTRACTING PLAN (AUG 1996)--ALTERNATE I (OCT 1995)

(a) This clause does not apply to small business concerns.

(b) "Commercial product," as used in this clause, means a product in regular production that is sold in substantial quantities to the general public and/or industry at established catalog or market prices. It also means a product which, in the opinion of the Contracting Officer, differs only insignificantly from the Contractor's commercial product.

"Subcontract," as used in this clause, means any agreement (other than one involving an employer-employee relationship) entered into by a Federal Government prime Contractor or subcontractor calling for supplies or services required for performance of the contract or subcontract.

(c) The apparent low bidder, upon request by the Contracting Officer, shall submit a subcontracting plan, where applicable, which separately addresses subcontracting with small business concerns, with small disadvantaged business concerns and with women-owned small business concerns. If the bidder is submitting an individual contract plan, the plan must separately address subcontracting with small business concerns, small disadvantaged business concerns, and women-owned small business concerns with a separate part for the basic contract and separate parts for each option (if any). The plan shall be included in and made a part of the resultant contract. The subcontracting plan shall be submitted within the time specified by the Contracting Officer. Failure to submit the subcontracting plan shall make the bidder ineligible for the award of a contract.

(d) The offeror's subcontracting plan shall include the following:

(1) Goals, expressed in terms of percentages of total planned subcontracting dollars, for the use of small business concerns, small disadvantaged business concerns and women-owned small business concerns as subcontractors. The offeror shall include all subcontracts that contribute to contract performance, and may include a proportionate share of products and services that are normally allocated as indirect costs.

(2) A statement of--

(i) Total dollars planned to be subcontracted;

(ii) Total dollars planned to be subcontracted to small business concerns; and

(iii) Total dollars planned to be subcontracted to small disadvantaged business concerns; and

(iv) Total dollars planned to be subcontracted to women-owned small business concerns.

(3) A description of the principal types of supplies and services to be subcontracted, and an identification of the types planned for subcontracting to (i) small business concerns, (ii) small disadvantaged business concerns and (iii) women-owned small business concerns.

(4) A description of the method used to develop the subcontracting goals in paragraph (d)(1) of this clause.

(5) A description of the method used to identify potential sources for solicitation purposes (e.g., existing company source lists, the Procurement Automated Source System (PASS) of the Small Business Administration, the National Minority Purchasing Council Vendor Information Service, the Research and Information Division of the Minority Business Development Agency in the Department of Commerce, or small, small disadvantaged and women-owned small business concerns trade associations). A firm may rely on the information

contained in PASS as an accurate representation of a concern's size and ownership characteristics for purposes of maintaining a small business source list. A firm may rely on PASS as its small business source list. Use of the PASS as its source list does not relieve a firm of its responsibilities (i.e., outreach, assistance, counseling, publicizing subcontracting opportunities) in this clause.

(6) A statement as to whether or not the offeror included indirect costs in establishing subcontracting goals, and a description of the method used to determine the proportionate share of indirect costs to be incurred with (i) small business concerns, (ii) small disadvantaged business concerns, and (iii) women-owned small business concerns.

(7) The name of the individual employed by the offeror who will administer the offeror's subcontracting program, and a description of the duties of the individual.

(8) A description of the efforts the offeror will make to assure that small, small disadvantaged and women-owned small business concerns have an equitable opportunity to compete for subcontracts.

(9) Assurances that the offeror will include the clause in this contract entitled "Utilization of Small, Small Disadvantaged and Women-Owned Small Business Concerns" in all subcontracts that offer further subcontracting opportunities, and that the offeror will require all subcontractors (except small business concerns) who receive subcontracts in excess of $500,000 ($1,000,000 for construction of any public facility) to adopt a plan similar to the plan agreed to by the offeror.

(10) Assurances that the offeror will (i) cooperate in any studies or surveys as may be required, (ii) submit periodic reports in order to allow the Government to determine the extent of compliance by the offeror with the subcontracting plan, (iii) submit Standard Form (SF) 294, Subcontracting Report for Individual Contracts, and/or SF 295, Summary Subcontract Report, in accordance with the instructions on the forms, and (iv) ensure that its subcontractors agree to submit Standard Forms 294 and 295.

(11) A recitation of the types of records the offeror will maintain to demonstrate procedures that have been adopted to comply with the requirements and goals in the plan, including establishing source lists; and a description of its efforts to locate small, small disadvantaged and women-owned small business concerns and award subcontracts to them. The records shall include at least the following (on a plant-wide or company-wide basis, unless otherwise indicated):

(i) Source lists (e.g., PASS), guides, and other data that identify small, small disadvantaged and women-owned small business concerns.

(ii) Organizations contacted in an attempt to locate sources that are small, small disadvantaged or women-owned small business concerns.

(iii) Records on each subcontract solicitation resulting in an award of more than $100,000, indicating (A) whether small business concerns were solicited and if not, why not, (B) whether small disadvantaged business concerns were solicited and if not, why not, (C) whether women-owned small business concerns were solicited and if not, why not, and (D) if applicable, the reason award was not made to a small business concern.

(iv) Records of any outreach efforts to contact (A) trade associations, (B) business development organizations, and (C) conferences and trade fairs to locate small, small disadvantaged and women-owned small business sources.

(v) Records of internal guidance and encouragement provided to buyers through (A) workshops, seminars, training, etc., and (B) monitoring performance to evaluate compliance with the programs's requirements.

(vi) On a contract-by-contract basis, records to support award data submitted by the offeror to the Government, including the name, address, and business size of each subcontractor. Contractors having company or division-wide annual plans need not comply with this requirement.

(e) In order to effectively implement this plan to the extent consistent with efficient contract performance, the Contractor shall perform the following functions:

(1) Assist small, small disadvantaged and women-owned small business concerns by arranging solicitations, time for the preparation of bids, quantities, specifications, and delivery schedules so as to facilitate the participation by such concerns. Where the contractor's lists of potential small, small disadvantaged and women-owned small business subcontractors are excessively long, reasonable effort shall be made to give all such small business concerns an opportunity to compete over a period of time.

(2) Provide adequate and timely consideration of the potentialities of small, small disadvantaged and women-owned small business concerns in all "make-or-buy" decisions.

(3) Counsel and discuss subcontracting opportunities with representatives of small, small disadvantaged and women-owned small business firms.

(4) Provide notice to subcontractors concerning penalties and remedies for misrepresentations of business status as small, small disadvantaged or women-owned small business for the purpose of obtaining a subcontract that is to be included as part or all of a goal contained in the Contractor's subcontracting plan.

(f) A master subcontracting plan on a plant or division-wide basis which contains all the elements required by (d) of this clause, except goals, may be incorporated by reference as a part of the subcontracting plan required of the offeror by this clause; provided, (1) the master plan has been approved, (2) the offeror ensures that the plan is updated as necessary and provides copies of the approved master plan, including evidence of its approval, to the Contracting Officer, and (3) goals and any deviations from the master plan deemed necessary by the Contracting Officer to satisfy the requirements of this contract are set forth in the individual subcontracting plan.

(g)(1) If a commercial product is offered, the subcontracting plan required by this clause may relate to the offeror's production generally, for both commercial and noncommercial products, rather than solely to the Government contract. In these cases, the offeror shall, with the concurrence of the Contracting Officer, submit one company-wide or division-wide annual plan.

(2) The annual plan shall be reviewed for approval by the agency awarding the offeror its first prime contract requiring a subcontracting plan during the fiscal year, or by an agency satisfactory to the Contracting Officer.

(3) The approved plan shall remain in effect during the offeror's fiscal year for all of the offeror's commercial products.

(h) Prior compliance of the offeror with other such subcontracting plans under previous contracts will be considered by the Contracting Officer in determining the responsibility of the offeror for award of the contract.

(i) The failure of the Contractor or subcontractor to comply in good faith with (1) the clause of this contract entitled "Utilization of Small, Small Disadvantaged and Women-Owned Small Business Concerns," or (2) an approved plan required by this clause, shall be a material breach of the contract.

26. FAR 52.225-5 BUY AMERICAN ACT--CONSTRUCTION MATERIALS (JUN 1997)
(APPLICABLE IF FAR 52.225-15, DFARS 252.225-7007, OR DFARS 252.225-7036 ARE NOT APPLICABLE)

(a) *Definitions*. As used in this clause--

"Components" means those articles, materials, and supplies incorporated directly into construction materials.

"Construction material" means an article, material, or supply brought to the construction site for incorporation into the building or work. Construction material also includes an item brought to the site pre-assembled from articles, materials or supplies. However, emergency life safety systems, such as emergency lighting, fire alarm, and audio evacuation systems, which are discrete systems incorporated into a public building or work and which are produced as a complete system, shall be evaluated as a single and distinct construction material regardless of when or how the individual parts or components of such systems are delivered to the construction site.

"Domestic construction material" means (1) an unmanufactured construction material mined or produced in the United States, or (2) a construction material manufactured in the United States, if the cost of its components mined, produced, or manufactured in the United States exceeds 50 percent of the cost of all its components. Components of foreign origin of the same class or kind as the construction materials determined to be unavailable pursuant to subparagraph 25.202(a)(2) of the Federal Acquisition Regulation (FAR) shall be treated as domestic.

(b)(1) The Buy American Act (41 U.S.C. 10a-10d) requires that only domestic construction material be used in performing this contract, except as provided in paragraphs (b)(2) and (b)(3) of this clause.

(2) This requirement does not apply to the excepted construction material or components listed by the Government as follows:

None

[List applicable excepted materials or indicate "None"]

(3) Other foreign construction material may be added to the list in paragraph (b)(2) of this clause if the Government determines that--

(i) The cost would be unreasonable (the cost of a particular domestic construction material shall be determined to be unreasonable when the cost of such material exceeds the cost of foreign material by more than 6 percent, unless the agency head determines a higher percentage to be appropriate);

(ii) The application of the restriction of the Buy American Act to a particular construction material would be impracticable or inconsistent with the public interest; or

(iii) The construction material is not mined, produced, or manufactured in the United States in sufficient and reasonably available commercial quantities of a satisfactory quality.

(4) The Contractor agrees that only domestic construction material will be used by the Contractor, subcontractors, material men, and suppliers in the performance of this contract, except for foreign construction materials, if any, listed in paragraph (b)(2) of this clause.

(c) *Request for determination*.

(1) Contractors requesting to use foreign construction material under paragraph (b)(3) of this clause shall provide adequate information for Government evaluation of the request for a determination regarding the inapplicability of the Buy American Act. Each submission shall include a description of the foreign and domestic construction materials, including unit of measure, quantity, price, time of delivery or availability, location of the construction project, name and address of the proposed contractor, and a detailed justification of the reason for use of foreign materials cited in accordance with paragraph (b)(3) of this clause. A submission based on unreasonable cost shall include a reasonable survey of the market and a completed price comparison table in the format in paragraph (d) of this clause. The price of construction material shall include all delivery costs to the construction site and any applicable duty (whether or not a duty-free certificate may be issued).

(2) If the Government determines after contract award that an exception to the Buy American Act applies, the contract shall be modified to allow use

of the foreign construction material, and adequate consideration shall be negotiated. However, when the basis for the exception is the unreasonable price of a domestic construction material, adequate consideration shall not be less than the differential established in paragraph (b)(3)(i) of this clause.

(3) If the Government does not determine that an exception to the Buy American Act applies, the use of that particular foreign construction material will be a failure to comply with the Act.

(d) For evaluation of requests under paragraph (c) of this clause based on unreasonable cost, the following information and any applicable supporting data based on the survey of suppliers shall be included in the request:

FOREIGN AND DOMESTIC CONSTRUCTION
MATERIALS PRICE COMPARISON

CONSTRUCTION MATERIAL DESCRIPTION	UNIT OF MEASURE	QUANTITY	PRICE (DOLLARS)*
Item 1:			
Foreign construction material	_____	_____	_____
Domestic construction material	_____	_____	_____
Item 2:			
Foreign construction material	_____	_____	_____
Domestic construction material	_____	_____	_____

[List name, address telephone number, and contact for suppliers surveyed. Attach copy of response; if oral, attach summary.]
[Include other applicable supporting information.]
*[*Include all delivery costs to the construction site and any applicable duty (whether or not a duty-free entry certificate is issued).]*

27. DFARS 252.225-7031 SECONDARY ARAB BOYCOTT OF ISRAEL (JUN 1992)

(A) Definitions.

As used in this clause--

"Foreign Person" means any person other than a United States person as defined in Section 16(2) of the Export Administration Act of 1979 (50 U.S.C. APP. SEC 2415).

"United States Person" is defined in Section 16(2) of the Export Administration Act of 1979 and means any United States resident or national (other than an individual resident outside the United States and employed by other than a United States person), any domestic concern (including any permanent domestic establishment of any foreign concern), and any foreign subsidiary or affiliate (including any permanent foreign establishment) of any domestic concern which is controlled in fact by such domestic concern, as determined under regulations of the President.

(B) Certification.

By submitting this offer, the offeror, if a foreign person, company or entity, certifies that it--

(1) Does not comply with the secondary Arab boycott of Israel; and

(2) Is not taking or knowingly agreeing to take any action, with respect to the secondary boycott of Israel by Arab countries, which 50 U.S.C. APP. SEC 2407(A) prohibits a United States person from taking.

28. FAR 52.243-7 NOTIFICATION OF CHANGES (APR 1984)

(a) Definitions. "Contracting Officer," as used in this clause, does not include any representative of the Contracting Officer. "Specifically authorized representative (SAR)," as used in this clause, means any person the Contracting Officer has so designated by written notice (a copy of which shall be provided to the Contractor) which shall refer to this subparagraph and shall be issued to the designated representative before the SAR exercises such authority.

(b) Notice. The primary purpose of this clause is to obtain prompt reporting of Government conduct that the Contractor considers to constitute a change to this contract. Except for changes identified as such in writing and signed by the Contracting Officer, the Contractor shall notify the Administrative Contracting Officer in writing promptly, within 14 calendar days from the date that the Contractor identifies any Government conduct (including actions, inactions, and written or oral communications) that the Contractor regards as a change to the contract terms and conditions. On the basis of the most accurate information available to the Contractor, the notice shall state--

(1) The date, nature, and circumstances of the conduct regarded as a change;

(2) The name, function, and activity of each Government individual and Contractor official or employee involved in or knowledgeable about such conduct;

(3) The identification of any documents and the substance of any oral communication involved in such conduct;

(4) In the instance of alleged acceleration of scheduled performance or delivery, the basis upon which it arose;

(5) The particular elements of contract performance for which the Contractor may seek an equitable adjustment under this clause, including--

(i) What contract line items have been or may be affected by the alleged change;

(ii) What labor or materials or both have been or may be added, deleted, or wasted by the alleged change;

(iii) To the extent practicable, what delay and disruption in the manner and sequence of performance and effect on continued performance have been or may be caused by the alleged change;

(iv) What adjustments to contract price, delivery schedule, and other provisions affected by the alleged change are estimated; and

(6) The Contractor's estimate of the time by which the Government must respond to the Contractor's notice to minimize cost, delay or disruption of performance.

(c) Continued performance. Following submission of the notice required by (b) above, the Contractor shall diligently continue performance of this contract to the maximum extent possible in accordance with its terms and conditions as construed by the Contractor, unless the notice reports a direction of the Contracting Officer or a communication from a SAR of the Contracting Officer, in either of which events the Contractor shall continue performance; provided, however, that if the Contractor regards the direction or communication as a change as described in (b) above, notice shall be given in the manner provided. All directions, communications, interpretations,

orders and similar actions of the SAR shall be reduced to writing promptly and copies furnished to the Contractor and to the Contracting Officer. The Contracting Officer shall promptly countermand any action which exceeds the authority of the SAR.

(d) Government response. The Contracting Officer shall promptly, within 14 calendar days after receipt of notice, respond to the notice in writing. In responding, the Contracting Officer shall either--

(1) Confirm that the conduct of which the Contractor gave notice constitutes a change and when necessary direct the mode of further performance;

(2) Countermand any communication regarded as a change;

(3) Deny that the conduct of which the Contractor gave notice constitutes a change and when necessary direct the mode of further performance; or

(4) In the event the Contractor's notice information is inadequate to make a decision under (1), (2), or (3) above, advise the Contractor what additional information is required, and establish the date by which it should be furnished and the date thereafter by which the Government will respond.

(e) Equitable adjustments.

(1) If the Contracting Officer confirms that Government conduct effected a change as alleged by the Contractor, and the conduct causes an increase or decrease in the Contractor's cost of, or the time required for, performance of any part of the work under this contract, whether changed or not changed by such conduct, an equitable adjustment shall be made--

(i) In the contract price or delivery schedule or both; and

(ii) In such other provisions of the contract as may be affected.

(2) The contract shall be modified in writing accordingly. In the case of drawings, designs or specifications which are defective and for which the Government is responsible, the equitable adjustment shall include the cost and time extension for delay reasonably incurred by the Contractor in attempting to comply with the defective drawings, designs or specifications before the Contractor identified, or reasonably should have identified, such defect. When the cost of property made obsolete or excess as a result of a change confirmed by the Contracting Officer under this clause is included in the equitable adjustment, the Contracting Officer shall have the right to prescribe the manner of disposition of the property. The equitable adjustment shall not include increased costs or time extensions for delay resulting from the Contractor's failure to provide notice or to continue performance as provided, respectively, in (b) and (c) above.

29. DFARS 252.247-7023 TRANSPORTATION OF SUPPLIES BY SEA (NOV 1995)

(a) Definitions. As used in this clause--

(1) "Components" means articles, materials, and supplies incorporated directly into end products at any level of manufacture, fabrication, or assembly by the Contractor or any subcontractor.

(2) "Department of Defense (DoD)" means the Army, Navy, Air Force, Marine Corps, and defense agencies.

(3) "Foreign flag vessel" means any vessel that is not a U.S.-flag vessel.

(4) "Ocean transportation" means any transportation aboard a ship, vessel, boat, barge, or ferry through international waters.

(5) "Subcontractor" means a supplier, materialman, distributor, or vendor at any level below the prime Contractor whose contractual obligation to perform results from, or is conditioned upon, award of the prime contract and who is performing any part of the work or other requirement of the prime contract. However, effective May 1, 1996, the term does not include a supplier, materialman, distributor, or vendor of commercial items or commercial components.

(6) "Supplies" means all property, except land and interests in land, that is clearly identifiable for eventual use by or owned by the DoD at the time of transportation by sea.

(i) An item is clearly identifiable for eventual use by the DoD if, for example, the contract documentation contains a reference to a DoD contract number or a military destination.

(ii) Supplies includes (but is not limited to) public works; buildings and facilities; ships; floating equipment and vessels of every character, type, and description, with parts, subassemblies, accessories, and equipment; machine tools; material; equipment; stores of all kinds; end items; construction materials; and components of the foregoing.

(7) "U.S.-flag vessel" means a vessel of the United States or belonging to the United States, including any vessel registered or having national status under the laws of the United States.

(b) The Contractor shall employ U.S.-flag vessels in the transportation by sea of any supplies to be furnished in the performance of this contract. The Contractor and its subcontractors may request that the Contracting Officer authorize shipment in foreign-flag vessels, or designate available U.S.-flag vessels, if the Contractor or a subcontractor believes that--

(1) U.S.-flag vessels are not available for timely shipment;

(2) The freight charges are inordinately excessive or unreasonable; or

(3) Freight charges are higher than charges to private persons for transportation of like goods.

(c) The Contractor must submit any request for use of other than U.S.-flag vessels in writing to the Contracting Officer at least 45 days prior to the sailing date necessary to meet its delivery schedules. The Contracting Officer will process requests submitted after such date(s) as expeditiously as possible, but the Contracting Officer's failure to grant approvals to meet the shipper's sailing date will not of itself constitute a compensable delay under this or any other clause of this contract. Requests shall contain at a minimum--

(1) Type, weight, and cube of cargo;

(2) Required shipping date;

(3) Special handling and discharge requirements;

(4) Loading and discharge points;

(5) Name of shipper and consignee;

(6) Prime contract number; and

(7) A documented description of efforts made to secure U.S.-flag vessels, including points of contact (with names and telephone numbers) with at least two U.S.-flag carriers contacted. Copies of telephone notes, telegraphic and facsimile message or letters will be sufficient for this purpose.

(d) The Contractor shall, within 30 days after each shipment covered by this clause, provide the Contracting Officer and the Division of National Cargo, Office of Market Development, Maritime Administration, U.S. Department of Transportation, Washington, DC 20590, one copy of the rated on board vessel operating carrier's ocean bill of lading, which shall contain the following information--

(1) Prime contract number;

(2) Name of vessel;

(3) Vessel flag of registry;

(4) Date of loading;

(5) Port of loading;

(6) Port of final discharge;

(7) Description of commodity;

(8) Gross weight in pounds and cubic feet if available;

(9) Total ocean freight in U.S. dollars; and

(10) Name of the steamship company.

(e) The Contractor agrees to provide with its final invoice under this contract a representation that to the best of its knowledge and belief--

(1) No ocean transportation was used in the performance of this contract;

(2) Ocean transportation was used and only U.S.-flag vessels were used for all ocean shipments under the contract;

(3) Ocean transportation was used, and the Contractor had the written consent of the Contracting Officer for all non-U.S.-flag ocean transportation; or

(4) Ocean transportation was used and some or all of the shipments were made on non-U.S.-flag vessels without the written consent of the Contracting Officer. The Contractor shall describe these shipments in the following format:

	Item Description	Contract Line Items	Quantity
Total....			

(f) If the final invoice does not include the required representation, the Government will reject and return it to the Contractor as an improper invoice for the purposes of the Prompt Payment clause of this contract. In the event there has been unauthorized use of non-U.S.-flag vessels in the performance of this contract, the Contracting Officer is entitled to equitably adjust the contract, based on the unauthorized use.

(g) The Contractor shall include this clause, including this paragraph (g) in all subcontracts under this contract, which exceed the simplified acquisition threshold in Part 13 of the Federal Acquisition Regulation.

30. FAR 52.252-4 ALTERATIONS IN CONTRACT (APR 1984)

Portions of this contract are altered as follows: None

31. FAR 52.252-6 AUTHORIZED DEVIATIONS IN CLAUSES (APR 1984)

(a) The use in this solicitation or contract of any Federal Acquisition Regulation (48 CFR Chapter 1) clause with an authorized deviation is indicated by the addition of "(DEVIATION)" after the date of the clause.

(b) The use in this solicitation or contract of any Department of Defense FAR Supplement (48 CFR Chapter 2) clause with an authorized deviation is indicated by the addition of "(DEVIATION)" after the name of the regulation.

32. DFARS 252.223-7004 DRUG-FREE WORK FORCE (SEP 1988)

(a) Definitions.

(1) "Employee in a sensitive position," as used in this clause, means an employee who has been granted access to classified information; or employees in other positions that the Contractor determines involve national security, health or safety, or functions other than the foregoing requiring a high degree of trust and confidence.

(2) "Illegal drugs," as used in this clause, means controlled substances included in Schedules I and II, as defined by section 802(6) of Title 21 of the United States Code, the possession of which is unlawful under Chapter 13 of that Title. The term "illegal drugs" does not mean the use of a controlled substance pursuant to a valid prescription or other uses authorized by law.

(b) The Contractor agrees to institute and maintain a program for achieving the objective of a drug-free work force. While this clause defines criteria for such a program, contractors are encouraged to implement alternative approaches comparable to the criteria in paragraph (c) that are designed to achieve the objectives of this clause.

(c) Contractor programs shall include the following, or appropriate alternatives:

(1) Employee assistance programs emphasizing high level direction, education, counseling, rehabilitation, and coordination with available community resources;

(2) Supervisory training to assist in identifying and addressing illegal drug use by Contractor employees;

(3) Provisions for self-referrals as well as supervisory referrals to treatment with maximum respect for individual confidentiality consistent with safety and security issues;

(4) Provision for identifying illegal drug users, including testing on a controlled and carefully monitored basis. Employee drug testing programs shall be established taking account of the following:

(i) The Contractor shall establish a program that provides for testing for the use of illegal drugs by employees in sensitive positions. The extent of and criteria for such testing shall be determined by the Contractor based on considerations that include the nature of the work being performed under the contract, the employee's duties, the efficient use of Contractor resources, and the risks to health, safety, or national security that could result from the failure of an employee adequately to discharge his or her position.

(ii) In addition, the Contractor may establish a program for employee drug testing--

(A) When there is a reasonable suspicion that an employee uses illegal drugs; or

(B) When an employee has been involved in an accident or unsafe practice;

(C) As part of or as a follow-up to counseling or rehabilitation for illegal drug use;

(D) As part of a voluntary employee drug testing program

(iii) The Contractor may establish a program to test applicants for employment for illegal drug use.

(iv) For the purpose of administering this clause, testing for illegal drugs may be limited to those substances for which testing is prescribed by section 2.1 of Subpart B of the "Mandatory Guidelines for Federal Workplace Drug Testing Programs" (53FR 11980 (April 11, 1988)), issued by the Department of Health and Human Services.

(d) Contractors shall adopt appropriate personnel procedures to deal with employees who are found to be using drugs illegally. Contractors shall not allow any employee to remain on duty or perform in a sensitive position who is found to use illegal drugs until such time as the Contractor, in accordance with procedures established by the Contractor, determines that the employee may perform in such a position.

(e) The provisions of this clause pertaining to drug testing programs shall not apply to the extent they are inconsistent with state or local law, or with an existing collective bargaining agreement; provided that with respect to the latter, the Contractor agrees that those issues that are in conflict will be a subject of negotiation at the next collective bargaining session.

33. EFARS 52.249-5000 BASIS FOR SETTLEMENT OF PROPOSALS (DEC 1995)

Actual costs will be used to determine equipment costs for a settlement proposal submitted on the total cost basis under FAR 49.206-2(b). In evaluating a termination settlement proposal using the total cost basis, the following principles will be applied to determine allowable equipment costs:

(1) Actual costs for each piece of equipment or groups of similar serial or series equipment need not be available in the Contractor's accounting records to determine total actual equipment costs.

(2) If equipment costs have been allocated to a contract using predetermined rates, those charges will be adjusted to actual costs.

(3) Recorded job costs adjusted for unallowable expenses will be used to determine equipment operating expenses.

(4) Ownership costs (depreciation) will be determined using the Contractor's depreciation schedule (subject to the provisions of FAR 31.205-11).

(5) License, taxes, storage and insurance costs are normally recovered as an indirect expense and unless the Contractor charges these costs directly to contracts, they will be recovered through the indirect expense rate.

END OF SECTION

ATTACHMENTS

ATTACHMENTS

1. GENERAL WAGE DECISION

2. DD FORM 2051, APPLICATION FOR COMMERCIAL AND GOVERNMENT ENTITY (CAGE) CODE - SEE SECTION 00100, DFARS 252.204-7001. COMPLETE SECTION B, BLOCKS 1 THROUGH 10, OF THE DD FORM 2051 AND RETURN WITH BID/COST PROPOSAL IF YOU DO NOT ALREADY HAVE A CAGE CODE.

   IF YOU HAVE BEEN AWARDED A DOD CONTRACT WITHIN THE PAST SEVERAL YEARS, THE OFFICE THAT MADE THE AWARD WILL PROBABLY HAVE YOUR CAGE CODE NUMBER IN THEIR DATA BASE. (SACRAMENTO DISTRICT WILL NOT HAVE INFORMATION ON LOS ANGELES DISTRICT AWARDS AND VICE VERSA.) IF YOU DO NOT KNOW YOUR CAGE CODE NUMBER, SUBMIT THE DD FORM 2051 WITH YOUR BID/PROPOSAL. PLEASE DO NOT SEND THE DD FORM 2051 AHEAD OF TIME. BE SURE THAT YOU USE A STREET ADDRESS FOR YOUR FIRM, NOT A POST OFFICE BOX.

   DO NOT UNDER ANY CIRCUMSTANCES DELAY SUBMITTING YOUR BID OR PROPOSAL WHILE ATTEMPTING TO OBTAIN A CAGE CODE NUMBER OR INFORMATION ON HOW TO COMPLETE THE DD FORM 2051. FAILURE TO FURNISH A CAGE CODE NUMBER OR THE FORM WILL NOT RENDER YOUR BID/PROPOSAL NONRESPONSIVE.

   IN ORDER TO FILL IN THE STANDARD INDUSTRIAL CLASSIFICATION (SIC) NUMBER AS REQUIRED BY THE DD FORM 2051, YOU WILL FIND THE SIC CODE FOR THIS SOLICITATION IN SECTION 00600, FAR 52.219-1. TO LIST OTHER SIC CODES YOUR FIRM IS ALSO IN THE BUSINESS TO PROVIDE, THE STANDARD INDUSTRIAL CLASSIFICATION MANUAL IS SOLD BY THE NATIONAL TECHNICAL INFORMATION SERVICE, 5285 PORT ROYAL ROAD, SPRINGFIELD, VIRGINIA 22161. THE ORDER NUMBER IS PB 87-100012.

3. PREAWARD SURVEY - SEE SECTION 00100, SAACONS 52.0209-4501. THE PREAWARD SURVEY IS ATTACHED FOR INFORMATION PURPOSES ONLY; IT WILL BE REQUIRED ONLY FROM THE LOW BIDDER AFTER BID OPENING IF THE LOW BIDDER HAS NOT HAD A CONTRACT WITH THE LOS ANGELES DISTRICT, CORPS OF ENGINEERS, IN THE LAST TWELVE-MONTH PERIOD. IT IS NOT REQUIRED AS PART OF THE BID PACKAGE.

4. SAMPLE SUBCONTRACTING PLAN - SEE SECTION 00100, SAACONS 52.0219-4581; SECTION 00700, FAR 52.219-9; SECTION 00800, SAACONS 52.0219-4509. THE SAMPLE SUBCONTRACTING PLAN IS ATTACHED FOR INFORMATION PURPOSES ONLY. A SUBCONTRACTING PLAN WILL BE REQUIRED ONLY FROM THE LOW BIDDER IF THE LOW BIDDER IS A LARGE BUSINESS AND THE LOW BID IS OVER $1 MILLION. A SUBCONTRACTING PLAN IS NOT REQUIRED FROM SMALL BUSINESSES. THE SUBCONTRACTING PLAN IS NOT REQUIRED FROM THE LOW BIDDER UNTIL AFTER THE BID OPENING; IT IS NOT REQUIRED AS PART OF THE BID PACKAGE.

General Decision Number CA970039
Superseded General Decision No. CA960039
State: California
Construction Type:
BUILDING
DREDGING
HEAVY
HIGHWAY
County(ies):
SANTA BARBARA
BUILDING CONSTRUCTION PROJECTS; DREDGING PROJECTS (does not include hopper dredge work); HEAVY CONSTRUCTION PROJECTS (does not include water well drilling); HIGHWAY CONSTRUCTION PROJECTS

Modification Number	Publication Date
0	02/14/1997
1	02/21/1997
2	04/04/1997
3	07/25/1997
4	08/15/1997
5	09/05/1997
6	09/26/1997
7	10/17/1997

COUNTY(ies): SANTA BARBARA

ASBE0005B 09/16/1996

	Rates	Fringes
INSULATOR/ASBESTOS WORKER		
Includes the application of all insulating materials, protective coverings, coatings, and finishings to all types of mechanical systems	27.96	7.53

ASBE0208B 09/20/1995

	Rates	Fringes
ASBESTOS REMOVAL WORKER/ HAZARDOUS MATERIAL HANDLER		
Includes preparation, wetting, stripping, removal, scrapping, vacuuming, bagging and disposing of all insulation materials from mechanical systems, whether they contain asbestos or not	20.00	4.54

BOIL0092A 04/01/1997

	Rates	Fringes
BOILERMAKER	29.06	9.01

BRCA0004H 05/01/1997

	Rates	Fringes
BRICKLAYER; MARBLE SETTER	23.98	5.76

BRCA0018C 07/31/1996

	Rates	Fringes
TILE SETTER	23.60	4.65

BRCA0018K 06/01/1996

	Rates	Fringes
TERRAZZO WORKER	25.97	4.15
TERRAZZO FINISHER	20.16	4.15

CARP0002A 07/01/1996

	Rates	Fringes
CARPENTERS:		
Carpenter (including drywall lathing), cabinet installer, floor worker and acoustical installer	23.80	5.10
Insulation installer:		
Wood frame or concrete block or tilt-up, Types III, IV and V construction	17.00	4.81
All other work	23.80	5.10
Shingler	23.93	5.10
Saw filer	23.88	5.10
Table power saw operator	23.90	5.10
Pneumatic nailer or power stapler	24.05	5.10
Commercial fence builder	20.80	5.10
Roof loader of shingles (commercial)	16.75	5.10
Millwright	24.30	5.10
Pile driver; Derrick barge; Bridge or dock carpenter; Cable splicer; Heavy framer; Rock slinger	23.93	5.10
Head rock slinger	24.03	5.10
Rock barge or scow	23.83	5.10

CARP0002B 07/01/1996

	Rates	Fringes
DIVERS:		
Diver, wet	52.86	5.10
Diver, stand-by	26.43	5.10
Diver tender	25.43	5.10

ELEC0011L 12/01/1992

	Rates	Fringes
COMMUNICATIONS AND SYSTEMS WORK:		
COMMUNICATIONS & SYSTEMS:		
Installer	16.15	3% + 3.40
Technician	17.90	3% + 3.40

SCOPE OF WORK:

Installation, testing, service and maintenance of systems utilizing the transmission and/or transference of voice, sound, vision and digital for commercial, educational, security and entertainment purposes for the following: TV monitoring and surveillance, background-foreground music, intercom and telephone interconnect, microwave transmission, multi-media, multiplex, nurse call systems, radio page, burglar alarms and fire alarm (see last paragraph below).

Communication Systems that transmit or receive information and/or control systems that are intrinsic to the above listed systems; inclusion or exclusion of terminations and testings of conductors determined by their function; excluding all other data systems or multiple systems which include control function or power supply; excluding installation of raceway systems, conduit systems, line voltage work, and energy management systems.

Does not cover work performed at Point Arguello or Vandenberg Air Force Base.

Fire alarm work shall be performed at the current inside wireman total cost package.

---

* ELEC0413A 08/01/1997

	Rates	Fringes
ELECTRICIANS:		
Vandenberg Air Force Base:		
Electrical subcontracts over $50,000:		
Electrician	29.87	3% + 7.55
Electrician, welding	30.37	3% + 7.55
Cable splicer	31.37	3% + 7.55
Electrical subcontracts of $50,000 or less:		
Electrician	26.10	3% + 7.55
Electrician, welding	26.60	3% + 7.55
Cable splicer	27.60	3% + 7.55
Remainder of <A Name=h4 HREF=#h3></A><A HREF=#h5></A><B>Santa Barbara</B> County:		
Electrical subcontracts over $50,000:		
Electrician	26.12	3% + 7.55
Electrician, welding	26.62	3% + 7.55
Cable splicer	27.62	3% + 7.55
Electrical subcontracts of $50,000 or less:		
Electrician	22.35	3% + 7.55
Electrician, welding	22.85	3% + 7.55
Cable splicer	23.85	3% + 7.55

ELEC0413B 06/01/1997

	Rates	Fringes

LINE CONSTRUCTION:

Vandenberg Air Force Base:		
Line technician; Equipment operator	30.47	4.5% + 6.65
Cable splicer	31.97	4.5% + 6.65
Ground person; Ground person/driver	23.79	4.5% + 6.65

Remainder of <A Name=h5 HREF=#h4></A><A HREF=#h6></A><B>Santa Barbara</B> County:

Line technician; Equipment operator	26.72	4.5% + 6.65
Cable splicer	28.22	4.5% + 6.65
Ground person; Ground person/driver	20.04	4.5% + 6.65

ELEC1245A 06/01/1997

	Rates	Fringes
OUTSIDE UTILITY TRANSMISSION WORK:		
Line worker; Cable splicer	28.64	4.5% +6.78
Powder worker	27.21	4.5% +6.54
Ground person	18.62	4.5% +6.50
Line worker, welding	30.07	4.5% +7.02

SCOPE OF WORK:
All outside work on electrical transmission lines, switchyards and substations, and outside work in electrical utility distribution systems owned, maintained and operated by electrical utility companies, municipalities, or governmental agencies.

ELEV0018A 09/15/1997

	Rates	Fringes
ELEVATOR MECHANIC	30.145	6.405

FOOTNOTE:
Vacation Pay: 8% with 5 or more years of service, 6% for 6 months to 5 years service. Paid Holidays: New Years Day, Memorial Day, Independence Day, Labor Day, Thanksgiving Day and Friday after, and Christmas Day.

ENGI0012C 07/01/1997

	Rates	Fringes
POWER EQUIPMENT OPERATORS:		
GROUP 1	24.30	9.95
GROUP 2	25.08	9.95
GROUP 3	25.37	9.95
GROUP 4	25.51	9.95
GROUP 5	26.61	9.95
GROUP 6	25.73	9.95
GROUP 7	25.84	9.95
GROUP 8	26.94	9.95
GROUP 9	25.96	9.95
GROUP 10	27.06	9.95
GROUP 11	26.13	9.95
GROUP 12	26.23	9.95
GROUP 13	26.26	9.95
GROUP 14	26.34	9.95
GROUP 15	26.46	9.95
GROUP 16	26.63	9.95
GROUP 17	26.73	9.95
GROUP 18	26.84	9.95
GROUP 19	26.96	9.95
GROUP 20	27.13	9.95
GROUP 21	27.23	9.95
GROUP 22	27.34	9.95
GROUP 23	27.46	9.95

GROUP 24	27.63	9.95
CRANES, PILEDRIVING & HOISTING EQUIPMENT:		
GROUP 1	24.30	9.95
GROUP 2	25.08	9.95
GROUP 3	25.37	9.95
GROUP 4	25.51	9.95
GROUP 5	25.73	9.95
GROUP 6	25.84	9.95
GROUP 7	25.96	9.95
GROUP 8	26.13	9.95
GROUP 9	26.30	9.95
GROUP 10	27.30	9.95
GROUP 11	28.30	9.95
GROUP 12	29.30	9.95
GROUP 13	30.30	9.95
TUNNEL GROUP:		
GROUP 1	25.58	9.95
GROUP 2	25.87	9.95
GROUP 3	26.01	9.95
GROUP 4	26.23	9.95
GROUP 5	26.34	9.95
GROUP 6	26.46	9.95
GROUP 7	26.76	9.95

POWER EQUIPMENT OPERATOR CLASSIFICATIONS

GROUP 1: Barge, brake, compressor operator, Ditch Witch, with seat or similar type equipment, elevator operator - inside, engineer oiler, generator operator, generator, pump or compressor plant operator, pump operator, signal, switch

GROUP 2: Concrete mixer operator - skip type, conveyor operator, fire person, hydrostatic pump operator, oiler crusher (asphalt or concrete plant), skiploader (when wheel type up to 3/4 yd. without attachment), tar pot fire person, temporary heating plant operator, trenching machine operator

GROUP 3: Equipment greaser (rack), Ford Ferguson (with dragtype attachments), helicopter radio (ground), power concrete curing machine operator, power concrete saw operator, power - driver jumbo form setter operator, stationary pipe wrapping and cleaning machine operator

GROUP 4: Asphalt plant fire person, backhoe operator (mini-max or similar type), boring machine operator, box or mixer (asphalt or concrete), chip spreading machine operator, concrete pump operator (small portable), drilling machine operator, small auger types (Texoma super economatic or similar types - Hughes 100 or 200 or similar types - drilling depth of 30’ maximum), equipment greaser (grease truck), guard rail post driver operator, highline cableway signal, hydra-hammer-aero stomper, power sweeper operator, roller operator (compacting), screed operator (asphalt or concrete), trenching machine operator (up to 6 ft.)

GROUP 5: Equipment greaser (grease truck/multi-shift)

GROUP 6: Asphalt plant engineer, batch plant operator, bit sharpener, concrete joint machine operator (canal and similar type), concrete planer operator, deck engine operator, derrick (oilfield type), drilling machine operator, bucket or auger types (Caldwell 100 bucket or similar types - Watson 1000 auger or similar types - Texoma 330, 500 or 600 auger or similar types - drilling depth of 45’ maximum), drilling machine operator, hydrographic seeder machine operator (straw, pump or seed), Jackson track maintainer, or similar type, Kalamazoo switch tamper, or similar type, machine tool operator, Maginnis internal full slab vibrator, mechanical berm, curb or gutter (concrete or asphalt), mechanical finisher operator (concrete, Clary-Johnson-Bidwell or similar type), pavement breaker operator (truck mounted), road oil mixing machine operator, roller operator (asphalt or finish), rubber-tired earth moving equipment (single

engine, up to and including 25 yds. struck), self-propelled tar pipelining machine operator, skiploader operator (crawler and wheel type, over 3/4 yd. and up to and including 1-1/2 yds.), slip form pump operator (power driven hydraulic lifting device for concrete forms), tractor operator - bulldozer, tamper-scraper (single engine, up to 100 h.p. flywheel and similar types, up to and including D-5 and similar types), tugger hoist operator

GROUP 7: Asphalt or concrete spreading operator (tamping or finishing), asphalt paving machine operator (Barber Greene or similar type), backhoe operator (up to and including 3/4 yd.), small Ford, Case or similar, cast-in-place pipe laying machine operator, combination mixer and compressor operator (gunite work), compactor operator (self-propelled), concrete mixer operator (paving), crushing plant operator, drill doctor, drilling machine operator, bucket or auger types (Caldwell 150 bucket or similar types - Watson 1500, 2000 2500 auger or similar types - Texoma 700, 800 auger or similar types - drilling depth of 60’ maximum), elevating grader operator, grade checker, gradall operator, grouting machine operator, heavy-duty repair person, Kalamazoo ballast regulator or similar type, Kolman belt loader and similar type, Le Tourneau blob compactor or similar type, loader operator (Athey, Euclid, Sierra and similar types), pneumatic concrete placing machine operator (Hackley-Presswell or similar type), pumpcrete operator, rotary drill operator (excluding caisson type), rubber-tired earth-moving equipment operator (single engine, Caterpillar, Euclid, Athey Wagon and similar types with any and all attachments over 25 yds. up to and including 50 cu. yds. struck), rubber-tired earth-moving equipment operator (multiple engine up to and including 25 yds. struck), rubber-tired scraper operator (self-loading paddle wheel type - John Deere, 1040 and similar single unit), self-propelled curb and gutter machine operator, skiploader operator (crawler and wheel type over 1-1/2 yds. up to and including 6-1/2 yds.), surface heater and planer operator, tractor compressor drill combination operator, tractor operator (any type larger than D-5 - 100 flywheel h.p. and over, or similar - bulldozer, tamper, scraper and push tractor single engine), tractor operator (boom attachments), traveling pipe wrapping, cleaning and bending machine operator, trenching machine operator

GROUP 8: Heavy-duty repair person (multi-shift)

GROUP 9: Drilling machine operator, bucket or auger types (Caldwell 200 B bucket or similar types - Watson 3000 or 5000 auger or similar types - Texoma 900 auger or similar types - drilling depth of 105’ maximum), dual drum mixer, heavy-duty repair-welder combination, monorail locomotive operator (diesel, gas or electric), motor patrol - blade operator (single engine), multiple engine tractor operator (Euclid and similar type - except Quad 9 cat.), rubber-tired earth-moving equipment operator (single engine, over 50 yds. struck), rubber-tired earth-moving equipment operator (multiple engine, Euclid, Caterpillar and similar over 25 yds. and up to 50 yds.), tower crane repair person, tractor loader operator (crawler and wheel type over 6-1/2 yds.), Woods mixer operator (and similar pugmill equipment)

GROUP 10: Heavy-duty repair-welder combination (multi-shift)

GROUP 11: Auto grader operator, automatic slip form operator, drilling machine operator, bucket or auger types (Caldwell, auger 200 <A Name=h6 HREF=#h5></A><A HREF=#h7></A><B>CA</B> or similar types - Watson auger 6000 or similar types - drilling depth of 175’ maximum), hoe ram or similar with compressor, mass excavator operator, mechanical finishing machine operator, mobile form traveler operator, motor patrol operator (multi-engine), pipe mobile machine operator, rubber-tired earth-moving equipment operator (multiple engine, Euclid, Caterpillar and similar type, over 50 cu. yds. struck), rubber-tired self-

loading scraper operator (paddle-wheel-auger type self-loading - two (2) or more units)

GROUP 12: Rubber-tired earth-moving equipment operator operating equipment with push-pull system (single engine, up to and including 25 yds. struck)

GROUP 13: Canal liner operator, canal trimmer operator, remote-control earth-moving equipment operator, wheel excavator operator

GROUP 14: Rubber-tired earth-moving equipment operator, operating equipment with push-pull system (single engine, Caterpillar, Euclid, Athey Wagon and similar types with any and all attachments over 25 yds. and up to and including 50 yds. struck), rubber-tired earth-moving equipment operator, operating equipment with push-pull system (multiple engine - up to and including 25 yds. struck)

GROUP 15: Rubber-tired earth-moving equipment operator, operating equipment with push-pull system (single engine, over 50 yds. struck), rubber-tired earth-moving equipment operator, operating equipment with push-pull system (multiple engine, Euclid, Caterpillar and similar, over 25 yds. and up to 50 yds. struck)

GROUP 16: Rubber-tired earth-moving equipment operator, operating equipment with push-pull system (multiple engine, Euclid, Caterpillar and similar, over 50 cu. yds. struck), tandem tractor operator (operating crawler type tractors in tandem - Quad 9 and similar type)

GROUP 17: Rubber-tired earth-moving equipment operator, operating in tandem (scrapers, belly dumps and similar types in any combination, excluding compaction units - single engine, up to and including 25 yds. struck)

GROUP 18: Concrete pump operator, truck-mounted, rubber-tired earth-moving equipment operator, operating in tandem (scrapers, belly dumps and similar types in any combination, excluding compaction units - single engine, Caterpillar, Euclid, Athey Wagon and similar types with any and all attachments over 25 yds. and up to and including 50 cu. yds. struck), rubber-tired earth-moving equipment operator, operating in tandem (scrapers, belly dumps and similar types in any combination, excluding compaction units - multiple engine, up to and including 25 yds. struck)

GROUP 19: Rubber-tired earth-moving equipment operator, operating in tandem (scrapers, belly dumps and similar types in any combination, excluding compaction units - single engine, over 50 yds. struck)

GROUP 20: Rubber-tired earth-moving equipment operator, operating in tandem (scrapers, belly dumps and similar types in any combination, excluding compaction units - multiple engine, Euclid, Caterpillar and similar type, over 50 cu. yds. struck)

GROUP 21: Rubber-tired earth-moving equipment operator, operating equipment with the tandem push-pull system (single engine, up to and including 25 yds. struck)

GROUP 22: Rubber-tired earth-moving equipment operator, operating equipment with the tandem push-pull system (single engine, Caterpillar, Euclid, Athey Wagon and similar types with any and all attachments over 25 yds. and up to and including 50 yds. struck), rubber-tired earth-moving equipment operator, operating with the tandem push-pull system (multiple engine, up to and including 25 yds. struck)

GROUP 23: Rubber-tired earth-moving equipment operator, operating equipment with the tandem push-pull system (single engine, over 50 yds. struck), rubber-tired earth-moving equipment operator, operating equipment with the tandem push-pull system (multiple engine, Euclid, Caterpillar and similar, over 25 yds. and up to 50 yds. struck)

GROUP 24: Rubber-tired earth-moving equipment operator, operating equipment with the tandem push-pull system (multiple

engine, Euclid, Caterpillar and similar type, over 50 cu. yds. struck)

CRANES, PILEDRIVING AND HOISTING EQUIPMENT CLASSIFICATIONS

GROUP 1: Engineer oiler; Fork lift operator (under 5 tons capacity)

GROUP 2: Truck crane oiler

GROUP 3: A-frame or winch truck operator; Ross carrier operator (jobsite)

GROUP 4: Bridge-type unloader and turntable operator; Helicopter hoist operator

GROUP 5: Stinger crane (Austin-Western or similar type); Tugger hoist operator (1 drum)

GROUP 6: Bridge crane operator; Cretor crane operator; Fork lift operator (over 5 tons); Hoist operator (Chicago boom and similar type); Lift mobile operator; Lift slab machine operator (Vagtborg and similar types); Material hoist operator; Shovel, backhoe, dragline, clamshell operator (over 3/4 yd. and up to 5 cu. yds. mrc); Tugger hoist operator

GROUP 7: Pedestal crane operator; Shovel, backhoe, dragline, clamshell operator (over 5 cu. yds. mrc); Tower crane repair; Tugger hoist operator (3 drum)

GROUP 8: Crane operator (up to and including 25 ton capacity); Crawler transporter operator; Derrick barge operator (up to and including 25 ton capacity); Hoist operator, stiff legs, Guy derrick or similar type (up to and including 25 ton capacity); Shovel, backhoe, dragline, clamshell operator (over 7 cu. yds. mrc)

GROUP 9: Crane operator (over 25 tons and up to and including 50 tons mrc); Derrick barge operator (over 25 tons up to and including 50 tons mrc); Highline cableway operator; Hoist operator, stiff legs, Guy derrick or similar type (over 25 tons up to and including 50 tons mrc); K-crane operator; Polar crane operator; Tower crane operator

GROUP 10: Crane operator (over 50 tons and up to and including 100 tons mrc); Derrick barge operator (over 50 tons up to and including 100 tons mrc); Hoist operator, stiff legs, Guy derrick or similar type (over 50 tons up to and including 100 tons mrc)

GROUP 11: Crane operator (over 100 tons and up to and including 200 tons mrc); Derrick barge operator (over 100 tons up to and including 200 tons mrc); Hoist operator, stiff legs, Guy derrick or similar type (over 100 tons up to and including 200 tons mrc); Mobile tower crane operator (over 100 tons up to and including 200 tons mrc)

GROUP 12: Crane operator (over 200 tons up to and including 300 tons mrc); Derrick barge operator (over 200 tons up to and including 300 tons mrc); Hoist operator, stiff legs, Guy derrick or similar type (over 200 tons, up to and including 300 tons mrc); Mobile tower crane operator (over 200 tons, up to and including 300 tons mrc)

GROUP 13: Crane operator (over 300 tons); Derrick barge operator (over 300 tons); Helicopter pilot; Hoist operator, stiff legs, Guy derrick or similar type (over 300 tons); Mobile tower crane operator (over 300 tons)

TUNNEL CLASSIFICATIONS

GROUP 1: Skiploader (wheel type up to 3/4 yd. without attachment)

GROUP 2: Power-driven jumbo form setter operator

GROUP 3: Dinkey locomotive or motorperson (up to and including 10 tons)

GROUP 4: Bit sharpener; Equipment greaser (grease truck); Slip form pump operator (power-driven hydraulic lifting device for concrete forms); Tugger hoist operator (1 drum); Tunnel locomotive operator (over 10 and up to and including 30 tons)

GROUP 5: Backhoe operator (up to and including 3/4 yd.); Small

Ford, Case or similar; Drill doctor; Grouting machine operator; Heading shield operator; Heavy-duty repairperson; Loader operator (Athey, Euclid, Sierra and similar types); Mucking machine operator (1/4 yd., rubber-tired, rail or track type); Pneumatic concrete placing machine operator (Hackley-Presswell or similar type); Pneumatic heading shield (tunnel); Pumpcrete gun operator; Tractor compressor drill combination operator; Tugger hoist operator (2 drum); Tunnel locomotive operator (over 30 tons)
GROUP 6: Heavy-duty repair/welder combination
GROUP 7: Tunnel mole boring machine operator

ENGI0012D 08/01/1997

	Rates	Fringes
POWER EQUIPMENT OPERATORS:		
DREDGING:		
Hydraulic suction dredges:		
Lever person operator	29.15	9.95
Deckmate; Watch engineer; Welder	26.07	9.95
Winch (stern winch on dredge)	25.52	9.95
Bargehand; Deckhand; Fire person-oiler; Leveehand	24.98	9.95
Dozer	26.18	9.95
Clamshell dredges:		
Lever person operator	29.15	9.95
Watch engineer; Deckmate	26.07	9.95
Barge mate	25.59	9.95
Bargehand; Deckhand; Fire person-oiler	24.98	9.95

IRON0001C 07/01/1997

	Rates	Fringes
IRONWORKERS:		
Vandenberg Air Force Base:		
Ornamental, reinforcing and structural	25.68	13.17
Fence erector	24.79	13.17
Remainder of County:		
Ornamental, reinforcing and structural	22.68	13.17
Fence erector	21.79	13.17

---

* LABO0001B 08/01/1997

	Rates	Fringes
BRICK TENDER:		
Subcontracts over $3 million	17.38	9.24
Subcontracts of $3 million or less	15.64	5.23

LABO0002H 07/01/1996

	Rates	Fringes
LABORERS:		
GROUP 1	16.96	9.11
GROUP 2	17.36	9.11
GROUP 3	17.56	9.11
GROUP 4	18.61	9.11
GROUP 5	18.81	9.11
TUNNEL LABORERS:		
GROUP 1	19.87	9.11
GROUP 2	19.99	9.11
GROUP 3	20.15	9.11
GROUP 4	20.43	9.11
GUNITE LABORERS:		
GROUP 1	19.86	10.21
GROUP 2	18.91	10.21

GROUP 3	16.40	10.21

HOUSEMOVERS (ONLY WHERE HOUSEMOVING IS INCIDENTAL TO A CONSTRUCTION CONTRACT):

Housemover	15.50	8.38
Yard maintenance person	15.25	8.38

LABORER CLASSIFICATIONS

GROUP 1: Cleaning and handling of panel forms; Concrete screeding for rough strike-off; Concrete, water curing; Demolition laborer, the cleaning of brick if performed by a worker performing any other phase of demolition work, and the cleaning of lumber; Fire watcher, limber, brush loader, piler and debris handler; Flag person; Gas, oil and/or water pipeline laborer; Laborer, asphalt-rubber material loader; Laborer, general or construction; Laborer, general clean-up; Laborer, landscaping; Laborer, jetting; Laborer, temporary water and air lines; Material hose operator (walls, slabs, floors and decks); Plugging, filling of shee bolt holes; Dry packing of concrete; Railroad maintenance, repair track person and road beds; Streetcar and railroad construction track laborers; Rigging and signaling; Scaler; Slip form raiser; Slurry seal crew (mixer operator, applicator operator, squeegee person, shuttle person, top person), filling of cracks by any method on any surface; Tar and mortar; Tool crib or tool house laborer; Traffic control by any method; Window cleaner; Wire mesh pulling - all concrete pouring operations

GROUP 2: Asbestos abatement; Asphalt shoveler; Cement dumper (on 1 yd. or larger mixer and handling bulk cement); Cesspool digger and installer; Chucktender; Chute handler, pouring concrete, the handling of the chute from readymix trucks, such as walls, slabs, decks, floors, foundation, footings, curb, gutters and sidewalks; Concrete curer, impervious membrane and form oiler; Cutting torch operator (demolition); Fine grader, highways and street paving, airport, runways and similar type heavy construction; Gas, oil and/or water pipeline wrapper - pot tender and form person; Guinea chaser; Headerboard person - asphalt; Laborer, packing rod steel and pans; Membrane vapor barrier installer; Power broom sweeper (small); Riprap stonepaver, placing stone or wet sacked concrete; Roto scraper and tiller; Sandblaster (pot tender); Septic tank digger and installer (lead); Tank scaler and cleaner; Tree climber, faller, chain saw operator, Pittsburgh chipper and similar type brush shredder; Underground laborer, including caisson bellower

GROUP 3: Buggymobile person; Concrete cutting torch; Concrete pile cutter; Driller, jackhammer, 2-1/2 ft. drill steel or longer; Dri-pak-it machine; Gas, oil and/or water pipeline wrapper, 6-in. pipe and over, by any method, inside and out; High scaler (including drilling of same); Hydro seeder and similar type; Impact wrench multi-plate; Kettle person, pot person and workers applying asphalt, lay-kold, creosote, lime caustic and similar type materials ("applying" means applying, dipping, brushing or handling of such materials for pipe wrapping and waterproofing); Operator of pneumatic, gas, electric tools, vibrating machine, pavement breaker, air blasting, come-alongs, and similar mechanical tools not separately classified herein; Pipelayer’s backup person, coating, grouting, making of joints, sealing, caulking, diapering and including rubber gasket joints, pointing and any and all other services; Rock slinger; Rotary scarifier or multiple head concrete chipping scarifier; Steel headerboard and guideline setter; Tamper, Barko, Wacker and similar type; Trenching machine, hand-propelled

GROUP 4: Asphalt raker, lute person, ironer and asphalt spreader boxes (all types); Concrete core cutter (walls, floors or ceilings), grinder or sander; Concrete saw person, cutting walls or flat work, scoring old or new concrete; Cribber, shorer,

lagging, sheeting and trench bracing, hand-guided lagging hammer; Head rock slinger; Laborer, asphalt-rubber distributor boot person; Laser beam in connection with laborers' work; Oversize concrete vibrator operator, 70 lbs. and over; Pipelayer performing all services in the laying and installation of pipe from the point of receiving pipe in the ditch until completion of operation, including any and all forms of tubular material, whether pipe, metallic or non-metallic, conduit and any other stationary type of tubular device used for the conveying of any substance or element, whether water, sewage, solid gas, air, or other product whatsoever and without regard to the nature of material from which the tubular material is fabricated; No-joint pipe and stripping of same; Prefabricated manhole installer; Sandblaster (nozzle person), water blasting, Porta Shot-Blast; Welding in connection with laborers' work

GROUP 5: Blaster powder, all work of loading holes, placing and blasting of all powder and explosives of whatever type, regardless of method used for such loading and placing; Driller: All power drills, excluding jackhammer, whether core, diamond, wagon, track, multiple unit, and any and all other types of mechanical drills without regard to the form of motive power; Toxic waste removal

TUNNEL LABORER CLASSIFICATIONS

GROUP 1: Batch plant laborer; Bull gang mucker, track person; Changehouse person; Concrete crew, including rodder and spreader; Dump person; Dump person (outside); Swamper (brake person and switch person on tunnel work); Tunnel materials handling person

GROUP 2: Chucktender, cabletender; Loading and unloading agitator cars; Nipper; Pot tender, using mastic or other materials (for example, but not by way of limitation, shotcrete); Vibrator person, jack hammer, pneumatic tools (except driller)

GROUP 3: Blaster, driller, powder person; Chemical grout jet person; Cherry picker person; Grout gun person; Grout mixer person; Grout pump person; Jackleg miner; Jumbo person; Kemper and other pneumatic concrete placer operator; Miner, tunnel (hand or machine); Nozzle person; Operating of troweling and/or grouting machines; Powder person (primer house); Primer person; Sandblaster; Shotcrete person; Steel form raiser and setter; Timber person, retimber person, wood or steel; Tunnel concrete finisher

GROUP 4: Diamond driller; Sandblaster, shaft and raise work

GUNITE LABORER CLASSIFICATIONS

GROUP 1: Nozzle and rod

GROUP 2: Gun

GROUP 3: Rebound

LABO0402E 07/01/1996

	Rates	Fringes
PLASTERER TENDER:		
North part of county	17.34	8.88
South part of county	18.34	8.88

LABO0882B 01/01/1997

	Rates	Fringes
ASBESTOS REMOVAL LABORER	10.37	3.51

SCOPE OF WORK:

Includes site mobilization, initial site clean-up, site preparation, removal of asbestos-containing material and toxic waste (including lead abatement and any other toxic materials), encapsulation, enclosure and disposal of asbestos-containing materials and toxic waste (including lead abatement and any other toxic materials) by hand or with equipment or machinery; scaffolding, fabrication of temporary wooden barriers and assembly of decontamination stations.

---

* LABO1184A 09/01/1997

	Rates	Fringes
LABORERS - STRIPING:		
GROUP 1	17.64	7.84
GROUP 2	18.04	7.84
GROUP 3	19.61	7.84
GROUP 4	20.61	7.84

LABORERS - STRIPING CLASSIFICATIONS

GROUP 1: Protective coating, pavement sealing, including repair and filling of cracks by any method on any surface in parking lots, game courts and playgrounds; carstops; operation of all related machinery and equipment

GROUP 2: Traffic surface abrasive blaster; pot tender - removal of all traffic lines and markings by any method (sandblasting, waterblasting, grinding, etc.) and preparation of surface for coatings. Traffic control person: controlling and directing traffic through both conventional and moving lane closures; operation of all related machinery and equipment

GROUP 3: Traffic delineating device applicator: Layout and application of pavement markers, delineating signs, rumble and traffic bars, adhesives, guide markers, other traffic delineating devices including traffic control. This category includes all traffic related surface preparation (sandblasting, waterblasting, grinding) as part of the application process. Traffic protective delineating system installer: removes, relocates, installs, permanently affixed roadside and parking delineation barricades, fencing, cable anchor, guard rail, reference signs, monument markers; operation of all related machinery and equipment; power broom sweepers

GROUP 4: Striper: layout and application of traffic stripes and markings; hot thermo plastic; tape traffic stripes and markings, including traffic control; operation of all related machinery and equipment

---

PAIN0036B 01/01/1997

	Rates	Fringes
PAINTERS:		
Work on service stations and car washes; small new commercial work (construction up to and including 3 stories in height, such as small shopping centers, small stores, small office buildings and small food establishments); small new industrial work (light metal buildings, small warehouses, small storage facilities and tilt-up buildings); and tenant improvement work (tenant improvement work not included in conjunction with the construction of the building; including repaint work) (not applicable to any phase of the aerospace industry or to hotels which operate commercial establishments as part of the hotel service)	16.95	5.53
All other work	21.24	5.53

PAIN0036H 07/01/1996

	Rates	Fringes
DRYWALL TAPER & FINISHER	23.66	5.49

PAIN0636B 11/01/1996

	Rates	Fringes
GLAZIER	23.10	7.34

PAIN1247B 08/01/1996

	Rates	Fringes
SOFT FLOOR LAYER	23.70	6.07

PLAS0052B 07/01/1996

	Rates	Fringes
CEMENT MASONS:		
Work on projects where the total permit value of the general contract and all subcontracts upon that jobsite is $7.5 million or less:		
Cement mason; Curb and gutter machine; Clary and similar type of screed operator (cement only); Grinder; Jackson vibratory, Texas screed and similar type screed operator; Scoring machine operator	18.30	8.70
Cement mason (magnesite - epoxy)	18.42	8.70
Cement mason, floating and troweling machine operator	18.55	8.70
All other work:		
Cement mason, including but not restricted to the following: cellular cement mason, chipping; patching, grinding; setting all concrete forms and perimeter forms, including catch basin structures and drain inlets, setting curb form and plank, setting of lines, stakes and grades; setting screeds, which includes screed pins; cutting, scoring and sawing new concrete, plugging, filling Shee-bolt holes; dry packing concrete and EMBECO; tending material hose on slabs, floors and decks; tending mixer-truck chute on slabs, floors and decks; bush hammering; patching and sacking, rodding, tamping, bidwell and similar type rodding machines, bull floating; Curb and gutter machine operator; Clary and similar type of screed operator (cement only); Grinding machine (all types); Jackson vibratory, Texas screed and similar type		

screed operator; Scoring machine operator	20.26	10.70
Cement mason (magnesite, magnesite - terrazzo and mastic composition, epoxy, urethanes and exotic coatings, Dex-O-Tex)	20.38	10.70
Cement mason - floating and troweling machine operator	20.51	10.70

PLAS0341B 08/07/1993

	Rates	Fringes
PLASTERER	22.10	4.53

PLUM0016K 07/01/1996

	Rates	Fringes
PLUMBER; STEAMFITTER:		
Vandenberg Air Force Base	30.56	7.54
Remainder of County	28.31	7.54
LANDSCAPE & IRRIGATION WORK	22.23	6.80

ROOF0036B 09/01/1996

	Rates	Fringes
ROOFERS:		
Roofer	21.77	6.385
Preparer (duties limited to the following: Roof removal of any type of roofing or roofing material; or spudding, or sweeping; and/or clean-up; and/or preload in, or in preparing the roof for application of roofing, damp and/or waterproofing material)	16.24	1.00

FOOTNOTE:
Pitch premium: Work on which employees are exposed to pitch fumes or required to handle pitch, pitch base or pitch impregnated products, or any material containing coal tar pitch, the entire roofing crew shall receive $1.75 per hour "pitch premium" pay.

SFCA0669G 01/01/1996

	Rates	Fringes
SPRINKLER FITTER (FIRE)	24.55	6.28

SHEE0273A 08/01/1996

	Rates	Fringes
SHEET METAL WORKER	25.06	8.68

TEAM0011K 07/01/1996

	Rates	Fringes
TRUCK DRIVERS:		
Point Arguello; Point Conception; and Vandenberg Air Force Base:		
GROUP 1	20.79	11.74
GROUP 2	20.94	11.74
GROUP 3	21.07	11.74
GROUP 4	21.12	11.74
GROUP 5	21.20	11.74
GROUP 6	21.32	11.74
GROUP 7	21.57	11.74
GROUP 8	21.82	11.74
GROUP 9	22.02	11.74
GROUP 10	22.32	11.74

GROUP 11	22.82	11.74
Remainder of County:		
GROUP 1	18.79	11.74
GROUP 2	18.94	11.74
GROUP 3	19.07	11.74
GROUP 4	19.12	11.74
GROUP 5	19.20	11.74
GROUP 6	19.32	11.74
GROUP 7	19.57	11.74
GROUP 8	19.82	11.74
GROUP 9	20.02	11.74
GROUP 10	20.32	11.74
GROUP 11	20.82	11.74

TRUCK DRIVER CLASSIFICATIONS

GROUP 1: Truck driver

GROUP 2: Driver of vehicle or combination of vehicles - 2 axles; Pilot control car moving heavy equipment; Truck-mounted broom

GROUP 3: Driver of vehicle or combination of vehicles - 3 axles; Boot person; Cement mason distribution truck; Fuel truck driver; Water truck - 2 axle; Dump truck, less than 16 yds. water level; Erosion control driver

GROUP 4: Driver of transit mix truck, under 3 yds.; Dumpcrete truck, less than 6-1/2 yds. water level

GROUP 5: Water truck, 3 or more axles; Truck greaser and tire person; Slurry truck driver

GROUP 6: Transit mix truck, 3 yds. or more; Dumpcrete truck, 6-1/2 yds. water level and over; Vehicle or combination of vahicles - 4 or more axle; Oil spreader truck; Dump truck, 16 yds. to 25 yds. water level

GROUP 7: A Frame, Swedish crane or similar; Forklift driver; Ross carrier driver

GROUP 8: Dump truck, 25 yds. or more water level; Truck repair person; Water pull single engine; Welder

GROUP 9: Truck repair person/welder; Low bed driver, 9 axles or over

GROUP 10: Water pull single engine with attachment

GROUP 11: Water pull twin engine; Water pull twin engine with attachments; Winch truck driver - $1.25 additional when operating winch or similar special attachments

---

WELDERS - Receive rate prescribed for craft performing operation to which welding is incidental.

==========

Unlisted classifications needed for work not included within the scope of the classifications listed may be added after award only as provided in the labor standards contract clauses (29 CFR 5.5(a)(1)(v)).

In the listing above, the "SU" designation means that rates listed under that identifier do not reflect collectively bargained wage and fringe benefit rates. Other designations indicate unions whose rates have been determined to be prevailing.

WAGE DETERMINATION APPEALS PROCESS

1.) Has there been an initial decision in the matter? This can be:

* an existing published wage determination
* a survey underlying a wage determination
* a Wage and Hour Division letter setting forth a position on a wage determination matter
* a conformance (additional classification and rate) ruling

On survey related matters, initial contact, including requests for summaries of surveys, should be with the Wage and Hour Regional Office for the area in which the survey was conducted because those Regional Offices have responsibility for the Davis-Bacon survey program. If the response from this initial contact is not satisfactory, then the process described in 2.) and 3.) should be followed.

With regard to any other matter not yet ripe for the formal process described here, initial contact should be with the Branch of Construction Wage Determinations. Write to:

Branch of Construction Wage Determinations
Wage and Hour Division
U. S. Department of Labor
200 Constitution Avenue, N. W.
Washington, D. C. 20210

2.) If the answer to the question in 1.) is yes, then an interested party (those affected by the action) can request

review and reconsideration from the Wage and Hour Administrator (See 29 CFR Part 1.8 and 29 CFR Part 7). Write to:

Wage and Hour Administrator
U.S. Department of Labor
200 Constitution Avenue, N. W.
Washington, D. C. 20210

The request should be accompanied by a full statement of the interested party’s position and by any information (wage payment data, project description, area practice material, etc.) that the requestor considers relevant to the issue.

3.) If the decision of the Administrator is not favorable, an interested party may appeal directly to the Administrative Review Board (formerly the Wage Appeals Board). Write to:

Administrative Review Board
U. S. Department of Labor
200 Constitution Avenue, N. W.
Washington, D. C. 20210

4.) All decisions by the Administrative Review Board are final.

END OF GENERAL DECISION

REQUEST FOR ASSIGNMENT OF A COMMERCIAL AND GOVERNMENT ENTITY (CAGE) CODE

(See Instructions on Reverse)

Form Approved
OMB No. 0704-0225
Expires May 31, 1990

SECTION A - TO BE COMPLETED BY INITIATOR

1. REQUESTING GOVERNMENT AGENCY / ACTIVITY

a. NAME: Activity Code: 369

b. ADDRESS (Street, City, State and Zip Code): Corps of Engineers, 1325 J Street, Rm 878, Sacramento, CA 95814-2922

2. TYPE CODE REQUESTED (X one)		3. EXCEPTION CODES
	a. TYPE A	a. CAO
X	b. TYPE F	b. ADP

4. INITIATOR

a. TYPED NAME (Last, First, Middle Initial)	b. OFFICE SYMBOL	c. SIGNATURE	d. TELEPHONE NO.
MILLER, RONALD J.	CESPK-CT	Ronald J Miller	(916) 557-5205

SECTION B - TO BE COMPLETED BY FIRM TO BE CODED

1. FIRM DO NOT USE A P.O. BOX ADDRESS!!!

a. NAME (Include Branch of, Division of, etc.)

b. ADDRESS (Street, City, State and Zip Code)

c. CAGE CODE (If previously assigned)

2. IF FIRM PREVIOUSLY OPERATED UNDER OTHER NAME(S) OR OTHER ADDRESS(ES) SPECIFY THE PREVIOUS NAME(S) AND/OR ADDRESS(ES) (Use separate sheet of paper, if necessary)

3. PARENT COMPANY AND AFFILIATED FIRMS (X one, and complete as applicable)

- [ ] a. NONE
- [ ] b. CURRENTLY AFFILIATED WITH OTHER FIRMS (List name(s) and address(es) of such firms on a separate sheet of paper)
- [ ] c. PREVIOUSLY AFFILIATED WITH OTHER FIRMS (List name(s) and address(es) of such firms on a separate sheet of paper)

4. PRIMARY BUSINESS CATEGORY (X one)

- [ ] a. MANUFACTURER
- [ ] b. DEALER / DISTRIBUTOR
- [ ] c. CONSTRUCTION FIRM
- [ ] d. SERVICE COMPANY
- [ ] e. SALES OFFICE
- [ ] f. OTHER (Specify)

5. DISADVANTAGED SMALL BUSINESS STATUS (X one)

- [ ] a. APPROVED BY SMALL BUSINESS ADMINISTRATION (SBA) FOR SECTION 8(a) PROGRAM
- [ ] b. OTHER DISADVANTAGED SMALL BUSINESS FIRM
- [ ] c. NOT DISADVANTAGED SMALL BUSINESS FIRM

6. NUMBER OF EMPLOYEES

7. WOMAN OWNED BUSINESS (X one)

- [ ] a. YES
- [ ] b. NO

8. STANDARD INDUSTRIAL CLASSIFICATION (SIC) CODE(S)

a. PRIMARY

b. OTHER (Specify)

SOLICITATION NUMBER: DACA05-98-B-0018

CONTRACT SPECIALIST: LOS ANGELES PROJECT

10. FIRM OFFICIAL

a. TYPED NAME (Last, First, Middle Initial)	b. DATE SIGNED (YYMMDD)	c. SIGNATURE	d. TELEPHONE NO.

INSTRUCTIONS FOR COMPLETING DD FORM 2051

GENERAL NOTE FOR PERSONNEL PREPARING OR PROCESSING THIS REPORT

Coding must be as indicated in the instructions. In cases where specific coding instructions are provided, reference must be made to the Department of Defense Manual for Standard Data Elements, DoD 5000.12-M. Noncompliance with either the coding instructions contained herein or those published in referenced manual will make the organization which fails to comply responsible for required concessions in data base communication.

SPECIFIC INSTRUCTIONS

SECTION A - TO BE COMPLETED BY THE INITIATING GOVERNMENT ACTIVITY

Item 1: Self-explanatory.

Item 2: Mark the type of code being requested.

a. Type A - Manufacturers Code which is used in the Federal Catalog System to identify a certain facility at a specific location which is a possible source for the manufacture and/or design control of items cataloged by the Federal Government; or,

b. Type F - Non-manufacturers Code which is required for identifying an organization/ function in MILSCAP. These are assigned to contractors which are non-manufacturers or are manufacturers not qualifying for a Type A Code.

Item 3: If applicable, enter the exception DoD Activity Address Code for the Servicing Contract Administration Office (CAO) or ADP point.

Item 4: Self-explanatory.

SECTION B - TO BE COMPLETED BY THE FIRM TO WHICH THE CODE WILL BE ASSIGNED

Items 1a and 1b: Self-explanatory.

Item 1c: If a CAGE Code (Type A or Type F) was previously assigned, enter it in this block.

Item 2: Self-explanatory.

Item 3: If a block other than "None" is marked, identify the Parent company by a (P) beside the firm name.

SECTION B - *(Continued)*

Item 4: Self-explanatory.

Item 5: A disadvantaged business firm is defined as a firm that is 51%, or more, owned, controlled, and operated by a person(s) who is socially and economically disadvantaged. "Controlled" is defined as exercising the power to make policy decisions. "Operated" is defined as actively involved in the day-to-day management of the firm.

Item 6: Enter the number of employees. This number should include the employees of all affiliates.

Item 7: A woman-owned business is defined as a firm that is 51%, or more, owned, controlled, and operated by a woman or women. "Controlled" and "Operated" are as defined in Item 5.

Item 8: The SIC Code is a Government Index used to identify business activity and indicates the function (manufacturer, wholesaler, retailer, or service) and the line of business in which the company is engaged. If multiple SIC Codes, indicate the primary first, next important, etc.

Items 9 and 10: Self-explanatory.

NOTE: When any future changes are made to the coded facility; i.e., name change, location change, business sold or operations discontinued, etc., written notification stating the appropriate change should be sent to:

Commander
Defense Logistics Services Center
ATTN: DLSC-SBB
Federal Center
74 North Washington
Battle Creek, MI 49017-3084
(616) 961-4358 FAX (616) 961-4265

☆U.S. Government Printing Office: 1989-242-450/90225

PREAWARD SURVEY OF PROSPECTIVE CONTRACTORS
CONSTRUCTION CONTRACTS

It is the general policy of the Department of Defense that contracts shall be awarded only to contractors determined to be responsible in accordance with Part 9 of the Federal Acquisition Regulation (FAR).

No contract shall be awarded to any person or firm unless the Contracting Officer first makes an affirmative determination that the prospective contractor is responsible within the meaning of the FAR, Part 9.

Before making a determination of responsibility, the Contracting Officer shall have in his/her possession or obtain information sufficient to satisfy himself/herself that a prospective contractor currently meets the minimum FAR Part 9 standards.

In order to make the required determination and also to expedite the contract award, the following information must be submitted by the Contractor as directed (see Section 00100, SAACONS 52.0209-4501):

A. COMPLETED CONTRACTOR EXPERIENCE DATA FORM WITH SUPPLEMENTAL SCHEDULES A-D (ATTACHED).

B. LATEST FINANCIAL STATEMENTS. IF THE FINANCIAL STATEMENT IS MORE THAN 60 DAYS OLD, SUBMIT A CERTIFICATE STATING THAT THE FIRM’S FINANCIAL CONDITION IS SUBSTANTIALLY THE SAME, OR, IF NOT THE SAME, STATE THE CHANGES THAT HAVE TAKEN PLACE.

C. PROVIDE LETTERS FROM BANKS OR OTHER FINANCIAL INSTITUTIONS WITH WHICH THE CONTRACTOR CONDUCTS BUSINESS. THE LETTERS SHOULD CONTAIN INFORMATION ABOUT YOUR FIRM’S ACCOUNTS, LOANS, LINES OF CREDIT, ETC., PROVIDING INFORMATION LEADING TO A DETERMINATION THAT YOUR FIRM IS "RESPONSIBILE" AS DEFINED IN THE FEDERAL ACQUISITION REGULATION, PART 9, "HAS THE FINANCIAL RESOURCES TO PERFORM THE CONTRACT OR THE ABILITY TO OBTAIN THEM". THE GOVT IS INTERESTED IN FINANCIAL STABILITY, TIMELY PAYMENTS, THE LENGTH AND NATURE OF THE RELATIONSHIP BETWEEN THE FIRM AND THE FINANCIAL INSTITUTION, ETC. WHICH REVEALS THE FIRM’S FINANCIAL ABILITY TO PERFORM THE CONTRACT. THE LETTERS SHOULD ALSO PROVIDE THE NAME AND TELEPHONE NUMBER OF THE BANK REPRESENTATIVE THE GOVERNMENT MAY CONTACT.

BE SURE TO INCLUDE IN YOUR PREAWARD SURVEY, INFORMATION ON ANY CONTRACTS YOU HAVE HAD WITH THE SACRAMENTO DISTRICT OR LOS ANGELES DISTRICT, CORPS OF ENGINEERS, WITHIN THE LAST 12 MONTHS.

THESE DOCUMENTS SHALL BE TREATED BY THE GOVERNMENT AS CONFIDENTIAL.

CONSTRUCTION CONTRACTOR EXPERIENCE DATA

DATE (Day, Month, Year)

1. FIRM NAME

2. MAIN OFFICE ADDRESS (Street, City, State and Telephone)

3. BRANCH OFFICES

4. SERVICES RENDERED
☐ CONSTRUCTION
☐ DESIGN ☐ CONSULTANT

5. ORGANIZATION
☐ INDIVIDUAL ☐ JOINT VENTURE
☐ PARTNERSHIP ☐ CORPORATION

6. DATE ORGANIZED

7. DATE INCORPORATED AND STATE

8. NAMES OF OFFICERS AND OTHER KEY PERSONNEL

I – PRESENT PAYROLL PERSONNEL (List Number of Each Category Below)

PARTNERS	OFFICERS	OTHER KEY	REMAINDER	TOTAL	SUBTOTAL PERMANENT	MAXIMUM PERSONNEL AT ANY TIME
						DATE _____

II – EQUIPMENT OWNED

PRESENT VALUE ($)	ACQUISITION COST ($)

III – FINANCIAL DATA AS OF (Date) _____

CURRENT ASSETS	CURRENT LIABILITIES	NET WORTH

IV – TOTAL CONTRACT VALUE OF CONSTRUCTION AND DEMOLITION IN PAST SIX YEARS EXCLUSIVE OF JOINT VENTURE

19	$
19	$
19	$
19	$
19	$
19	$
AVERAGE ANNUAL $ INCOME	

LARGEST JOB IN PAST SIX YEARS

CONTRACT AMOUNT	DATE

DESCRIPTION

OWNER

V – LARGEST JOB EVER CONTRACTED (If Other Than In Past Six Years)

CONTRACT AMOUNT	DATE

DESCRIPTION

OWNER

VI – TYPE OF WORK IN WHICH FIRM SPECIALIZES

VII – TYPE OF WORK AND ACCEPTABLE LOCATIONS FOR WHICH FIRM DESIRES TO BE CONSIDERED

VIII – COST-REIMBURSEMENT TYPE CONTRACTS

AGENCY OR OWNER	DATE	DESCRIPTION	AMOUNT

TYPED NAME AND POSITION OR TITLE OF PERSON SIGNING

SIGNATURE

NOTE: Use reverse side for remarks, explanations, or detailed description of items reported above.

SCHEDULE A

CONSTRUCTION CONTRACTOR EXPERIENCE DATA

EXISTING COMMITMENTS: (List below the construction projects your firm has under way on this date, including those on which you are presently low bidder but have not received an award.)

CONTRACT NUMBER AND AMOUNT	DESCRIPTION OF WORK	FOR WHOM PERFORMED*	PERCENT COMPLETE	PERCENT SUBLET

* PROVIDE NAME OF ORGANIZATION, POINT OF CONTACT AND TELEPHONE NUMBER FOR CONTACT.

SCHEDULE B

CONSTRUCTION CONTRACTOR EXPERIENCE DATA

EXPERIENCE DATA: (List below the principal construction projects your firm has completed within the past six (6) years.)

CONTRACT NO.	AMOUNT	DESCRIPTION/LOCATION	CONTACT PERSON/PHONE NO	PERCENT SUBLET

SCHEDULE C

CONSTRUCTION CONTRACTOR EXPERIENCE DATA

CONSTRUCTION AND/OR TECHNICAL EQUIPMENT: (List total equipment and facilities owned for performing the work and present status as to whether or not it is committed to existing contracts.)

QUANTITY	DESCRIPTION	CONDITION	YEARS OF SERVICE	PRESENT STATUS

SCHEDULE D

CONSTRUCTION CONTRACTOR EXPERIENCE DATA

TO BE COMPLETED IF PROPOSED MILITARY CONSTRUCTION CONTRACT EXCEEDS $1,000,000.

A. Each contract awarded within the preceding three-month period exceeding $1,000,000 in value with brief description of the contract:

B. Each contract awarded within the preceding three-year period not already physically completed and exceeding $5,000,000 in value with brief description of the contract:

- S A M P L E -

SUBCONTRACTING PLAN

SUBCONTRACTING PLAN SUBMITTED IN ACCORDANCE WITH PUBLIC LAW 95-507 (THE FOLLOWING FORMAT IS ESTABLISHED IN ACCORDANCE WITH FAR 52.219-9(d)(1) THROUGH (d)(11) AND INCLUDES THE REQUIRED STATUTORY ELEMENTS AS DESCRIBED IN FAR 19.704. IT ALSO INCLUDES ADDITIONAL REQUIREMENTS OF THE DFARS 219.704 AND AFARS 219.704. EVALUATION OF THE SUBCONTRACTING PLAN BY THE GOVERNMENT WILL BE AS PRESCRIBED IN FAR (AND ITS SUPPLEMENTS) 19.705.

DO NOT JUST ADDRESS THE FOLLOWING ISSUES IN SHORT; FOLLOW THE GUIDANCE OF FAR 52.219-9 IN ITS ENTIRETY. FOR EXAMPLE, PARAGRAPH 11 BELOW ASKS FOR A DISCUSSION OF RECORDS; THE PLAN SHOULD ADDRESS ALL RECORDS AS DESCRIBED IN FAR 52.219-9(d)(11)(i) THROUGH (vi).

IN ACCORDANCE WITH FAR 19.704 IF THE CONTRACT CONTAINS OPTIONS, THE CUMULATIVE VALUE OF THE BASIC CONTRACT AND ALL OPTIONS IS CONSIDERED IN DETERMINING WHETHER A SUBCONTRACTING PLAN IS NECESSARY. ONCE IT HAS BEEN DECIDED IF A PLAN IS NECESSARY, THE SUBCONTRACTING PLAN SHALL CONTAIN SEPARATE PARTS, ONE FOR THE BASIC CONTRACT AND ONE FOR EACH OPTION. *IN OTHER WORDS, IT IS NECESSARY TO ADDRESS PLANNED SUBCONTRACTING DOLLARS AND PERCENTAGES OF TOTAL TO BE AWARDED TO SMALL; SMALL, DISADVANTAGED; WOMEN-OWNED SMALL; HBCU/MIs; AND QUALIFIED NONPROFIT AGENCIES FOR THE BLIND AND OTHER SEVERELY DISABLED SEPARATELY FOR THE BASIC CONTRACT PERIOD AND EACH OPTION YEAR. THEREFORE, PARAGRAPHS 1 AND 2 BELOW MUST BE PREPARED SEPARATELY FOR THE BASE YEAR AND EACH OPTION YEAR. ALL OTHER PARTS OF THE SUBCONTRACTING PLAN ONLY NEED TO BE ADDRESSED ONCE.*

A SMALL DISADVANTAGED BUSINESS GOAL OF LESS THAN FIVE PERCENT MUST BE APPROVED TWO LEVELS ABOVE THE CONTRACTING OFFICER (DFARS 219.705-4).

PROJECT TITLE: _____

RFP/IFB NO.: _____ CONTRACT NO.: _____

CONTRACTOR NAME: _____

DIVISION: _____

INDIVIDUAL COMPLETING THIS PLAN: _____

TELEPHONE NO.: _____

1. Goals, expressed in terms of percentages of total planned subcontracting dollars, for the use of small business concerns; small, disadvantaged business concerns; women-owned small business concerns; historically black colleges and universities (HBCUs) and minority institutions (MIs); and qualified nonprofit agencies for the blind and other severely disabled as subcontractors. The offeror shall include all subcontracts that contribute to contract performance and may include a proportionate share of products and services that are normally allocated as indirect costs.

Percentage Goals:

Small Business	_____%
Small, Disadvantaged Business	_____%
Women-Owned Small Business	_____%
HBCUs and MIs	_____%
Qualified Nonprofit Agencies for the Blind and Other Severely Disabled	_____%

2. Statement of: (i) total dollars planned to be subcontracted, (ii) total dollars planned to be subcontracted to small business; (iii) total dollars planned to be subcontracted to small, disadvantaged business; (iv) total dollars planned to be subcontracted to women-owned small business; (v) total dollars planned to be subcontracted to HBCUs and MIs; and (vi) total dollars planned to be subcontracted to qualified nonprofit agencies for the blind and other severely disabled.

Total Cost of Prime Contract:	$_____	
Total Dollars to be Subcontracted	$_____	_____%*
To Small Business	$_____	_____%**
To Small, Disadvantaged Business	$_____	_____%**
To Women-Owned Small Business	$_____	_____%**
To HBCUs and MIs	$_____	_____%**
To Qualified Nonprofit Agencies for the Blind and Other Severely Disabled	$_____	_____%**

NOTES: * Calculate percentage of Total Dollars to be Subcontracted to Total Cost of Prime Contract

** Calculate subcontracted dollars to each group to Total Dollars to be Subcontracted, NOT TO Total Cost of Prime Contract.

PLANNED SUBCONTRACTING INCLUDES ALL PLANNED EXPENDITURES. TOTAL ESTIMATED COST TO SUBCONTRACTORS AND GOALS MUST BE ESTABLISHED EVEN IF THE CONTRACT IS OF THE INDEFINITE-DELIVERY TYPE.

SUBCONTRACTS AWARDED TO SMALL, DISADVANTAGED BUSINESSES; WOMEN-OWNED SMALL BUSINESSES; HBCU/MIs; AND QUALIFIED NONPROFIT AGENCIES FOR THE BLIND AND OTHER SEVERELY DISABLED COUNT TOWARD THE OVERALL SMALL BUSINESS GOAL. HBCU/MIs ARE COUNTED AS A SUBSET OF THE SMALL, DISADVANTAGED GOAL. THE CORPS OF ENGINEERS HAS NOT BEEN ASSIGNED A SET GOAL FOR HBCU/MIs OR QUALIFIED NONPROFIT AGENCIES FOR THE BLIND AND OTHER SEVERELY DISABLED.

IN ACCORDANCE WITH DFARS 219.703, QUALIFIED NONPROFIT AGENCIES FOR THE BLIND AND OTHER SEVERELY DISABLED THAT HAVE BEEN APPROVED BY THE COMMITTEE FOR PURCHASE FROM PEOPLE WHO ARE BLIND OR SEVERELY DISABLED UNDER THE JAVITS-WARNER-O'DAY (41 U.S.C. 46-48) ARE ELIGIBLE THROUGH SEPTEMBER 30, 1997, TO PARTICIPATE IN THE PROGRAM.

3. A description of the principal supply and service areas to be subcontracted and an identification of the types planned for subcontracting to (i) small business subcontractors, (ii) small, disadvantaged business subcontractors, (iii) women-owned small business subcontractors, (iv) HBCUs and MIs, (v) qualified nonprofit agencies for the blind and other severely disabled:

4. A statement of the method used in developing the proposed subcontracting goals for small business concerns; small, disadvantaged business concerns; women-owned small business concerns; HBCUs and MIs; and qualified nonprofit agencies for the blind and other severely disabled:

5. Description of the method used to identify potential sources for solicitation purposes to assure small; small, disadvantaged, women-owned small; HBCU and MI; and qualified nonprofit agencies for the blind and other severely disabled participation (e.g., existing company source lists, the Procurement Automated Source System (PASS) of the Small Business Administration, the National Minority Purchasing Council Vendor Information Service, the Research and Information Division of the Minority Business Development Agency in the Department of Commerce, or small; small, disadvantaged, women-owned small, HBCU or MI, or qualified nonprofit agencies for the blind and other severely disabled concerns trade associations):

6. A statement as to whether or not the offeror included indirect costs in establishing the subcontracting goals, and if so, a description of the method used to determine the proportionate share of indirect costs to be incurred with: (i) small business concerns; (ii) small, disadvantaged business concerns; (iii) women-owned small business concerns; (iv) HBCUs and MIs); and (v) qualified nonprofit agencies for the blind and other severely disabled:

7. The name of the individual employed by the offeror who will administer the offeror's subcontracting program and a description of the duties of the individual.

Name: _____

Title and Telephone Number: _____

Address: _____

City, State and Zip Code: _____

Duties (Attachment may be used):

8. Describe the efforts the offeror will make to assure that small business concerns; small, disadvantaged business concerns; women-owned small business concerns; HBCUs and MIs; and qualified nonprofit agencies for the blind and

other severely disabled will have an equitable opportunity to complete for subcontractors under this contract:

9. I do herewith assure that this concern will include the clause at FAR 52.219-8 entitled "Utilization of Small, Small Disadvantaged and Women-Owned Small Business Concerns" in all subcontracts which offer further subcontracting opportunities and will require all subcontractors (except small business concerns) who receive subcontracts in excess of $500,000 (or, in the case of a contract for construction of any public facility, $1 million) to adopt a plan similar to the plan agreed to by this concern and in consonance with the FAR clause 52.219-9.

10. I also assure that this concern will (i) cooperate in any studies or surveys as may be required, (ii) submit periodic reports in order to allow the Government to determine the extent of compliance by the offeror with the subcontracting plan, and (iii) submit Standard Form (SF) 294, Subcontracting Report for Individual Contracts, and SF 295, Summary Subcontract Report, in accordance with the instructions of the forms, and (iv) ensure that the subcontractors under this contract agree to submit the required SF 294s and 295s. I assure that this concern will submit an SF 295 on Corps of Engineers projects only. The SF 295 shall be completed and distributed in accordance with the Corps of Engineers supplemental instructions. I will not report Corps of Engineers projects through any other agency unless authorized by the Contracting Officer.

11. Provide a recitation of the types of records the offeror will maintain to demonstrate procedures which have been adopted to comply with the requirements and goals set forth in the plan, including the establishment of source lists; and a description of its efforts to locate small business concerns; small, disadvantaged business concerns; women-owned small business concerns; HBCUs and MIs; and qualified nonprofit agencies for the blind and other severely disabled and award subcontracts to them. The records shall include at least the following (on a plant-wide or company-wide basis, unless otherwise indicated):

a. Source lists (e.g., PASS), guides, and other data that identify small business concerns; small, disadvantaged business concerns; women-owned small business concerns; HBCUs and MIs; and qualified nonprofit agencies for the blind and other severely disabled.

b. Organizations contacted in an attempt to locate sources that are small; small disadvantaged; women-owned small business concerns, HBCUs and MIs; and qualified nonprofit agencies for the blind and other severely disabled.

c. Records on each subcontract solicitation resulting in an award of more than $100,000, indicating (A) whether small business concerns were solicited and if not, why not, (B) whether small disadvantaged business concerns were solicited and if not, why not, (C) whether women-owned small business concerns were solicited and if not, why not, (D) whether HBCUs and MIs were solicited and if not, why not, (E) whether qualified nonprofit agencies for the blind and other severely disabled were solicited and if not, why not, and (F) if applicable, the reason award was not made to a small business concern.

d. Records of any outreach efforts to contact (A) trade associations, (B) business development organizations, and (C) conferences and trade fairs to

locate small; small disadvantaged; women-owned small business sources; HBCUs and MIs; and qualified nonprofit agencies for the blind and other severely disabled.

e. Records of internal guidance and encouragement provided to buyers through (A) workshops, seminars, training, etc., and (B) monitoring performance to evaluate compliance with the programs's requirements.

f. On a contract-by-contract basis, records to support award data submitted by the offeror to the Government, including the name, address, and business size of each subcontractor. Contractors having company or division-wide annual plans need not comply with this requirement.

12. Discuss the extent to which the offeror has historically been successful in complying with the requirements of the clauses at FAR 52.219-8, Utilization of Small, Small Disadvantaged and Women-Owned Small Business Concerns, and 52.219-9, Small, Small Disadvantaged and Women-Owned Small Business Subcontracting Plan, in establishing realistic yet challenging goals and show evidence of ability to achieve the goals. Information addressing past performance on DoD contracts evidencing achievement of established subcontracting goals will be in the form of Standard Forms 294 and 295 (attach these to this plan). Offerors who have had no prior Department of Defense contracts from which to assess past performance will not be penalized. Those who have had prior DoD contracts must provide the SF 294s and 295s on past DoD contracts.

_____
(Signature)

_____
(Title of Corporate Officer)

TECHNICAL SPECIFICATIONS

TABLE OF CONTENTS

TECHNICAL SPECIFICATIONS

SECTION	TITLE
	DIVISION 1 - GENERAL REQUIREMENTS
01130	ENVIRONMENTAL PROTECTION
01300	SUBMITTAL PROCEDURES
01311	NETWORK ANALYSIS SYSTEM
01415	METRIC MEASUREMENT
01440	CONTRACTOR QUALITY CONTROL
01500	TEMPORARY CONSTRUCTION FACILITIES
	DIVISION 2 - SITE WORK
02050	DEMOLITION
02110	CLEARING
02210	GRADING
02221	EXCAVATION, FILLING AND BACKFILLING FOR BUILDINGS
02222	EXCAVATION, TRENCHING AND BACKFILLING FOR UTILITIES SYSTEMS
02511	CONCRETE PADS
02551	BITUMINOUS PAVING FOR ROADS, STREETS AND OPEN STORAGE AREAS
02558	BITUMINOUS TACK COAT
02559	BITUMINOUS PRIME COAT
02560	BITUMINOUS SEAL COAT, SPRAY APPLICATION
02580	PAVMENT MARKINGS
02730	SANITARY SEWERS
	DIVISION 3 - CONCRETE
03100	STRUCTURAL CONCRETE FORMWORK
03200	CONCRETE REINFORCEMENT
03300	CAST-IN-PLACE STRUCTURAL CONCRETE
	DIVISION 4 - MASONRY
04200	MASONRY
	DIVISION 5 - METALS
05055	WELDING, STRUCTURAL
05120	STRUCTURAL STEEL
05300	STEEL DECKING
05500	MISCELLANEOUS METAL
	DIVISION 6 - WOOD AND PLASTICS
06100	ROUGH CARPENTRY
06200	FINISH CARPENTRY
	DIVISION 7 - THERMAL AND MOISTURE PROTECTION
07320	CLAY TILE ROOFING
07650	COPPER SHEET METAL FLASHING
07920	JOINT SEALING
	DIVISION 8 - DOORS AND WINDOWS

08110 STEEL DOORS AND FRAMES
08120 ALUMINUM DOORS AND FRAMES
08201 WOOD DOORS
08318 SECURITY-VAULT DOOR
08520 ALUMINUM WINDOWS
08700 BUILDER'S HARDWARE
08810 GLASS AND GLAZING

DIVISION 9 - FINISHES

09250 GYPSUM WALLBOARD
09310 CERAMIC TILE
09510 ACOUSTICAL CEILING
09650 RESILIENT FLOORING
09680 CARPET
09900 PAINTING
09915 COLOR SCHEDULE
09950 WALL COVERING

DIVISION 10 - SPECIALTIES

10160 TOILET PARTITIONS
10440 INTERIOR SIGNAGE
10800 TOILET ACCESSORIES

DIVISION 11 - EQUIPMENT

(NOT APPLICABLE)

DIVISION 12 - FURNISHINGS

12540 WINDOW BLINDS

DIVISION 13 - SPECIAL CONSTRUCTION

13080 SEISMIC PROTECTION FOR MECHANICAL, ELECTRICAL EQUIPMENT

DIVISION 14 - CONVEYING SYSTEMS

(NOT APPLICABLE)

DIVISION 15 - MECHANICAL

15250 THERMAL INSULATION FOR MECHANICAL SYSTEMS
15400 PLUMBING (GENERAL PURPOSE)
15488 GAS PIPING SYSTEMS
15569 WATER HEATING; GAS; UP TO 20 MBTUH
15653 AIR-CONDITIONING SYSTEM (UNITARY TYPE)
15895 AIR SUPPLY, DISTRIBUTION, VENTILATION AND EXHAUST SYSTEM
15950 HEATING, VENTILATING AND AIR CONDITIONING HVAC CONTROL SYSTEMS
15990 TESTING, ADJUSTING AND BALANCING OF HVAC SYSTEM

DIVISION 16 - ELECTRICAL

16375	ELECTRICAL DISTRIBUTION SYSTEM, UNDERGROUND
16415	ELECTRICAL WORK, INTERIOR
16721	FIRE DETECTION AND ALARM SYSTEM
16725	INTRUSION DETECTION SYSTEMS

INDEX

SECTION 01130

ENVIRONMENTAL PROTECTION

PARAGRAPH		PAGE
PART 1	GENERAL	1
1.1	REFERENCES	1
1.2	DEFINITIONS	1
1.3	SUBCONTRACTORS	1
1.4	ENVIRONMENTAL PROTECTION REQUIREMENTS	1
1.5	ENVIRONMENTAL PROTECTION PLAN	3
PART 2	PRODUCTS (Not Applicable)	5
PART 3	EXECUTION	5
3.1	SPECIAL ENVIRONMENTAL PROTECTION REQUIREMENTS	5
3.2	HISTORICAL, ARCHAEOLOGICAL, AND CULTURAL RESOURCES	5
3.3	PROTECTION OF WATER RESOURCES	5
3.4	PROTECTION OF AIR RESOURCES	6
3.5	INSPECTION	7
3.6	MAINTENANCE OF POLLUTION CONTROL FACILITIES	7
3.7	TRAINING OF CONTRACTOR PERSONNEL	7

SECTION 01130

ENVIRONMENTAL PROTECTION

PART 1 GENERAL

1.1 REFERENCES

The publications listed below form a part of this specification to the extent referenced. The publications are referred to in the text by basic designation only.

CODE OF FEDERAL REGULATIONS (CFR)

40 CFR 261	Identification and listing of Hazardous Waste

ENGINEERING MANUALS (EM)

EM 385-1-1	(1996) U.S. Army Corps of Engineers Safety and Health Requirements Manual

1.2 DEFINITIONS

Environmental pollution and damage is defined as the presence of chemical, physical, or biological elements or agents that adversely affect human health or welfare; unfavorably alter ecological balances of plant or animal communities; or degrade the environment from an aesthetic, cultural or historic perspective. Environmental protection is the prevention/control of pollution and habitat disruption that may occur during construction. The control of environmental pollution and damage requires consideration of air, water, land, biological and cultural resources; and includes management of visual aesthetics; noise; solid, chemical, gaseous, and liquid waste; radiant energy and radioactive materials; and other pollutants.

1.3 SUBCONTRACTORS:

Compliance with the provisions of this section by subcontractors will be the responsibility of the Contractor.

1.4 ENVIRONMENTAL PROTECTION REQUIREMENTS

The Contractor and subcontractors shall comply with all applicable Federal, State, and local laws and regulations. The Contractor shall provide environmental protective measures and procedures to prevent and control pollution, limit habitat disruption, and correct environmental damage that occurs during construction.

A. Protection of Features

This section supplements the Contract Clauses PROTECTION OF EXISTING VEGETATION, STRUCTURES, EQUIPMENT, UTILITIES, AND IMPROVEMENTS; OPERATIONS AND STORAGE AREAS; and CLEANING UP, Section 00700. The Contractor shall prepare a list of features requiring protection under the provisions of the contract clause which are not specially identified on the drawings as environmental features requiring protection. The Contractor shall protect those environmental features, indicated specially on the drawings, in spite of

interference which their preservation may cause to the Contractor's work under the contract.

(1) It is intended that the natural and cultural resources within the project boundaries and outside the limits of permanent work performed under this contract be preserved in their present condition or be restored in accordance with the Vandenberg AFB Land Management Plan. The Contractor shall confine project-related activities to areas defined by the plans or specifications. The Contractor shall mark the construction limits using 36-inch stakes placed no further than 25 feet apart. These stakes must remain in place for the duration of the project. After staking, the construction limits will be inspected and must be approved by Base Environmental Management personnel prior to start of construction. The Contractor shall brief all employees and subcontractors on the purpose of the stakes. Any encroachment outside the staked area may result in project delays and increased environmental costs for which the Contractor shall be liable.

B. Permits

All permits must be obtained from the proper agency and paid for by the Contractor, see Contract Clause, PERMITS AND RESPONSIBILITIES.

(1) All construction activity performed on Vandenberg AFB is subject to federal environmental laws including, but not limited to: The National Environmental Policy Act (NAPA); The National Historic Preservation Act (NAPA); Endangered Species Act; Resource Conservation and Recovery Act (RCRA); Comprehensive Environmental Response Liability and Compensation Act (CERLCA); Clean Water Act (CWA); Clean Air Act (CAA); Safe Drinking Water Act (SDWA), and applicable state, regional, and local equivalents. The Contractor is responsible for compliance with these laws. The Environmental Management Office, 30 SPW/ET, is the single point of contact with regulatory agencies

(2) The Contractor shall comply with all Santa Barbara County Air Pollution Control District (APCD) rules and regulations. These include, but are not limited to, the following:

(a) All demolition, site clearing, rough grading, landscape grading, excavation, backfilling, and trenching shall comply with APCD Rules 210, 302, 303, 304, and 306.

(b) All coating/painting operations shall comply with APCD Rules 102FF, 201, 317, 322, 323, 330, 337 and 339.

(c) All construction of new or modified air-conditioning systems shall comply with APCD Rule 335.

(d) All operations with solvents shall comply with APCD Rule 317 and 324.

(e) All sandblasting/corrosion control operations shall comply with California Administrative Code, Title 17, Register 84, No. 35, Sections 92000 through 92540, and shall comply with APCD Rules 303, 304, 306, 205.C.3.b.1, 901, and 1001. All sandblasting equipment must be permitted with a valid Permit to Operate (PTO) from the APCD. Only abrasives which are certified for use in sandblasting operations by the California Air Resources Board (CARB) Advisory may be used.

(3) <u>Hazardous materials:</u>

(a) The Contractor shall be responsible for the removal, storage, transportation, and disposal of all hazardous waste (Title 22, CCR) and designated waste (Title 23, CCR) in accordance with applicable federal,

state, local, and base regulations. Copies of all analyses and manifests shall be given to the Government inspector at the time of removal from base and after disposal facility accepts and signs for the waste. Hazardous waste manifests will be signed by 730 CES/CEVC personnel only. Suspected hazardous materials encountered during excavation and construction will require immediate notification of Bioenvironmental Engineering Services (Base Hospital) for examination, possible sampling, and guidance for management. If hazardous or designated waste is identified after award, a negotiated equitable adjustment will be made to the Contract.

(b) Any electrical equipment removed, maintained or repaired as part of this Contract shall be tested for polychlorinated biphenyls (PCBs), a regulated hazardous waste. Testing and laboratory analyses shall be paid for by the Contractor. Testing, removal, storage, transportation and disposal of this material shall follow federal, state and base guidelines. This may include but is not limited to the following: 40 CFR 761 (Federal); Title 22 CCR (California); and OPLAN 8550-XX (VAFB).

(c) Removal of any underground storage tank (UST) shall be coordinated with the 30 CDG monitor, 6-8095. The Contractor may be required to obtain an (Application for Permit to Remove" from the Santa Barbara County Health Care Service.

1.5 ENVIRONMENTAL PROTECTION PLAN

Within 15 calendar days of Notice of Award, the Contractor shall submit an Environmental Protection Plan for review and acceptance by the Contracting Officer. Acceptance is conditional and is predicated upon satisfactory performance during construction. The Government reserves the right to require the Contractor to make changes in the Environmental Protection Plan or operations if the Contracting Officer determines that environmental protection requirements are not being met. The plan shall detail the actions which the Contractor shall take to comply with all applicable Federal, State, and local laws and regulations concerning environmental protection and pollution control and abatement, as well as the additional specific requirements of this contract. No physical work at the site shall begin prior to acceptance of the Contractor’s plan. The environmental protection plan shall include, but not be limited to, the following:

A. List of State and Local Laws and Regulations

The Contractor shall provide as part of the Environmental Protection Plan a list of all State and local environmental laws and regulations which apply to the construction operations under the Contract.

B. Spill Control Plan

The Contractor shall include as part of the environmental protection plan, a Spill Control Plan. The plan shall include the procedures, instructions, and reports to be used in the event of an unforeseen spill of a substance regulated by the Emergency Response and Community Right-to-Know Act or regulated under State or local laws or regulations. The Spill Control Plan supplements the requirements of EM 385-1-1. This plan shall include as a minimum:

(1) The name of the individual who will be responsible for implementing and supervising the containment and cleanup.

(2) Training requirements for Contractor's personnel and methods of accomplishing the training.

(3) A list of materials and equipment to be immediately available at the job site, tailored to cleanup work of the potential hazard(s) identified.

(4) The names and locations of suppliers of containment materials and locations of additional fuel oil recovery, cleanup, restoration, and material-placement equipment available in case of an unforeseen spill emergency.

(5) The methods and procedures to be used for expeditious contaminant cleanup.

(6) The name of the individual who will report any spills or hazardous substance releases and who will follow up with complete documentation. This individual shall immediately notify the Contracting Officer in addition to the legally required Federal, State, and local reporting channels (including the National Response Center 1-800-424-8802) if a reportable quantity spill occurs. The plan shall contain a list of the required reporting channels and telephone numbers.

C. Recycling and Waste Minimization Plan

The Contractor shall submit a Recycling and Waste Minimization Plan as a part of the Environmental Protection Plan. The plan shall detail the Contractor’s actions to comply with the following recycling and waste minimization requirements:

(1) The Contractor shall participate in State and local government sponsored recycling programs to reduce the volume of solid waste materials at the source.

PART 2 PRODUCTS (Not Applicable)

PART 3 EXECUTION

3.1 SPECIAL ENVIRONMENTAL PROTECTION REQUIREMENTS

A. U.S. Department of Agriculture (USDA) Quarantined Considerations

The Contractor shall thoroughly clean all construction equipment at the prior job site in a manner that ensures all residual soil is removed and that egg deposits from plant pests are not present. The Contractor shall consult with the USDA Plant Protection and Quarantine (USDA - PPQ) jurisdictional office for additional cleaning requirements that may be necessary.

B. Noise Pollution:

The Contractor shall maintain all noise levels within the following limits and regulations:

(A) <u>All vehicles</u> shall have operational noise suppression systems (e.g. mufflers).

(B) <u>Noise levels</u> shall comply with OSHA Standards for the State Model Community Noise Control Ordinance.

(C) <u>Construction operations which generate excessive noise levels</u> shall be prohibited between the hours of 7:00 P.M. and 7:00 A.M. without prior approval by the Contracting Officer.

3.2 HISTORICAL, ARCHAEOLOGICAL, AND CULTURAL RESOURCES

A. Discovered Historic, Archaeological, and Cultural Resources

If during construction activities, items are observed that may have historic or archaeological value (e.g., Native American human remains or associated objects are discovered), such observations shall be reported immediately to the Contracting Officer so that the appropriate authorities may be notified and a determination made as to their significance and what, if any, special disposition of the finds should be made. The Contractor shall cease all activities that may result in impact to or the destruction of these resources. The Contractor shall prevent his employees from trespassing on, removing, or otherwise disturbing such resources.

3.3 PROTECTION OF WATER RESOURCES

The Contractor shall keep construction activities under surveillance, management, and control to avoid polluting of surface and ground waters.

3.4 PROTECTION OF AIR RESOURCES

Special management techniques as set out below shall be implemented to control air pollution by the construction activities. These techniques supplement the requirements of Federal, State, and local laws and regulations; and the safety requirements under this Contract. If any of the following techniques conflict with the requirements of Federal, State, or local laws or regulations, or safety requirements under this contract, then those requirements shall be followed in lieu of the following.

A. Particulates

Airborne particulates, including dust particles, from construction activities and processing and preparation of materials shall be controlled at all times, including weekends, holidays, and hours when work is not in progress. The Contractor shall maintain all excavations, stockpiles, haul roads, permanent and temporary access roads, plant sites, disposal sites, borrow areas, and all other work areas free from airborne dust which would cause a hazard or nuisance.

B. Dust Control:

Approved temporary methods of stabilization consisting of sprinkling, chemical treatment, light bituminous treatment or similar methods will be permitted to control dust. Sprinkling, to be approved, must be repeated at such internals as to keep all parts of the disturbed area at least damp at all times, and the Contractor must have sufficient competent equipment on the job to accomplish this if sprinkling is used. Dust control shall be performed as the work proceeds and whenever a dust nuisance or hazard occurs.

C. Emission Control:

The Contractor shall see that all his vehicles and stationary piston-engine-powered equipment have emission control systems in conformance with Federal, State, and local regulations, as specified in 40 CFR 60 and 40 CFR 85-86 (and later amendments); in the California Administrative Code, Title 17, Part III, and Title 13, Chapter 3 (and later amendments); and in the rules and regulations of the Santa Barbara County Air Pollution Control District. These emission control systems shall be operational and well maintained at all times. In addition, transfer and storage systems that carry or contain volatile liquids or solids or that generate particulates shall be constructed

and operated to minimize escape of vapors and particulates and shall comply in this regard with regulations of the U.S. Environmental Protection Agency, the State of California, and the Santa Barbara County Air Pollution Control District.

D. Maintenance of Pollution Control Facilities During Construction:

During the construction period the Contractor shall conduct adequate training courses for his supervisory maintenance personnel (down to and including foreman) including initial instructions of at least 30 minutes and continuing instruction at appropriate times but in no case less than 30 minutes per month. The curriculum shall include but not be limited to the following topics:

(A) Methods of detection and avoiding pollution;

(B) Familiarity with environmental standards both statutory and contractual;

(C) Installation and care of vegetation covers, plants, and other facilities to prevent and correct environmental pollution.

(D) Instruction in the recognition of archaeological resources.

3.5 INSPECTION

If the Contracting Officer notifies the Contractor in writing of any observed noncompliance with contract requirements or Federal, State, or local laws, regulations, or permits, the Contractor shall inform the Contracting Officer of proposed corrective action and take such action to correct the noncompliance. Such notice, when delivered to the Contractor or his authorized representative at the site of the work, shall be deemed sufficient for the purpose. If the Contractor fails to comply promptly, the Contracting Officer may issue an order stopping all or part of the work until satisfactory corrective action is taken. No time extensions will be granted or costs or damages allowed to the Contractor for any such suspension, unless it was determined that the Contractor was in compliance in accordance with FAR 52.212-12, see Section 00700.

3.6 MAINTENANCE OF POLLUTION CONTROL FACILITIES

The Contractor shall maintain all constructed pollution control facilities and portable pollution control devices for the duration of the Contract or for the length of time construction activities create the particular pollutant.

3.7 TRAINING OF CONTRACTOR PERSONNEL

Contractor personnel shall be trained in environmental protection and pollution control. The Contractor shall conduct environmental protection/pollution control meetings for all Contractor personnel monthly. The training and meeting agenda shall include methods of detecting and avoiding pollution, familiarization with pollution standards, both statutory and contractual, installation and care of facilities (vegetative covers, etc.), and instruments required for monitoring purposes to ensure adequate and continuous environmental protection/pollution control. Anticipated hazardous or toxic chemicals or wastes, and other regulated contaminants, shall also be discussed. Other items to be discussed shall include recognition and protection of archaeologic sites and artifacts.

-- End of Section --

INDEX

SECTION 01300

SUBMITTAL PROCEDURES

PARAGRAPH		PAGE
PART 1	GENERAL	1
1.1	SUBMITTAL CLASSIFICATION	1
1.2	SUBMITTAL REVIEW AND APPROVAL	1
1.3	APPROVED SUBMITTALS	2
1.4	DISAPPROVED SUBMITTALS	2
1.5	PAYMENT FOR ITEMS FOR WHICH A SUBMITTAL AND APPROVAL IS REQUIRED	2
PART 2	PRODUCTS (Not Applicable)	2
PART 3	EXECUTION	2
3.1	GENERAL	2
3.2	SUBMITTAL REGISTER (ENG Form 4288)	3
3.3	SCHEDULING	3
3.4	TRANSMITTAL FORM (ENG Form 4025)	3
3.5	SUBMITTAL PROCEDURE	4
3.6	MECHANICAL ROOM LAYOUT DRAWINGS	4
3.7	SPARE PARTS LIST AND MAINTENANCE OPERATIONS MANUALS	5
3.8	COLOR BOARDS	6
3.9	AS-BUILT DRAWINGS	6
3.10	CONTROL OF SUBMITTALS	8
3.11	GOVERNMENT APPROVED SUBMITTALS	8
3.12	INFORMATION ONLY SUBMITTALS	8
3.13	STAMPS	8

SECTION 01300

SUBMITTAL PROCEDURES

PART 1 GENERAL

1.1 SUBMITTAL CLASSIFICATION

Submittals are identified with submittal description (SD) numbers and are classified as follows:

1.1.1 Government Approved

Governmental approval is required for extensions of design, critical materials, deviations, equipment whose compatibility with the entire system must be checked, and other items as designated by the Contracting Officer. Within the terms of the Contract Clause entitled "Specifications and Drawings for Construction," they are considered to be "shop drawings."

1.1.2 Information Only

All submittals not requiring Government approval will be for information only. They are not considered to be "shop drawings" within the terms of the Contract Clause referred to above.

1.2 SUBMITTAL REVIEW AND APPROVAL

Before submission, Contractor shall review all submittals prepared by subcontractors, suppliers, and himself, for completeness, accuracy, and compliance with plans and specifications. Contractor shall not use red markings on submittals. Red markings are reserved for use by the Contracting Officer. The Contractor shall have an independent review agent, not associated with his organization, do the review of all submittals, except for submittals specified in paragraph 1.1.1, above. The review by the independent agency shall be done by licensed architects or registered engineers in the appropriate disciplines of architectural, civil, structural, mechanical, and electrical, as appropriate. The reviews shall be thorough and complete and authenticated by registered engineers’s or architects’s stamp. Contractor approval of drawings submitted to the Government by the Contractor, subcontractor, or any lower tier subcontractor, shall be indicated by an "Approved" stamp on the drawing with the Contractor’s name, signature, and date, as shown at the end of this Section. This administration of submittal drawing review must be integrated into the Contractor’s Quality Control Plan. The requirement for independent agency review cannot be delegated to subcontractors or suppliers. The plan must delineate in precise detail how the Contractor intends to satisfy this requirement. This should include names of organizations, and individuals who will be doing the work with their qualifications/resumes. Supplier’s or subcontractors certifications are not acceptable as meeting this requirement of independent review. Submittals not conforming to the requirements of this section will be returned to the Contractor for correction and resubmittal.

1.3 APPROVED SUBMITTALS

The Contracting Officer’s approval of submittals shall not be construed as a complete check, but will indicate only that the general method of construction, materials, detailing and other information are satisfactory. Approval will not relieve the Contractor of the responsibility for any error which may exist, as the Contractor under the CQC requirements of this contract is responsible for the dimensions, the design of adequate connections and

details, and the satisfactory construction of all work. After submittals have been approved by the Contracting Officer, no resubmittal for the purpose of substituting materials or equipment will be given consideration unless accompanied by an explanation of why a substitution is necessary.

1.4 DISAPPROVED SUBMITTALS

The Contractor shall make all corrections required by the Contracting Officer and promptly furnish a corrected submittal in the form and number of copies specified for the initial submittal. If the Contractor considers any correction indicated on the submittals to constitute a change to the contract, a notice in accordance with the Contract Clause "Changes" shall be given promptly to the Contracting Officer.

1.5 PAYMENT FOR ITEMS FOR WHICH A SUBMITTAL AND APPROVAL IS REQUIRED

In accordance with FAR 52.232-5, "Payments Under Fixed-Price Construction Contracts", the Government shall make progress payments to the Contractor monthly based on estimates of work accomplished which meets the standards of quality established under the contract. On items for which submittals must be approved by the Contracting Officer, payment cannot be made for the item until the Government establishes that the item "meets the standards of quality" required by the contract. The Contractor shall not invoice for, nor shall the Government make payment for any item, for which submittal and approval is required, until the item has been submitted and approved as described herein.

PART 2 PRODUCTS (Not Applicable)

PART 3 EXECUTION

3.1 GENERAL

The Contractor shall make submittals as required by the specifications. The Contracting Officer may request submittals in addition to those specified when deemed necessary to adequately describe the work covered in the respective sections. Units of weights and measures used on all submittals shall be the same used in the contract drawings. Submittals shall be made in the respective number of copies and to the respective addresses set forth below. Each submittal shall be complete and in sufficient detail to allow ready determination of compliance with contract requirements. Prior to submittal, all items shall be checked and approved by the Contractor’s Quality Control (CQC) representative and each respective transmittal form (ENG Form 4025) shall be stamped, signed, and dated by the CQC representative certifying that the accompanying submittal complies with the contract requirements. Proposed deviations from the contract requirements shall be clearly identified. Submittals shall include items such as: Contractor’s, manufacturer’s, or fabricator’s drawings; descriptive literature including (but not limited to) catalog cuts, diagrams, operating charts or curves; test reports; test cylinders; samples; O&M manuals (including parts list); certifications; warranties and other such required submittals. Submittals requiring Government approval shall be scheduled and made prior to the acquisition of the material or equipment covered thereby. Samples remaining upon completion of the work shall be picked up and disposed of in accordance with manufacturers Material Safety Data Sheets (MSDS) and in compliance with existing laws and regulations.

3.2 SUBMITTAL REGISTER (ENG Form 4288)

At the end of this section is one set of ENG Forms 4288 listing each item of equipment and material for which submittals are required by the specifications; this list may not be all inclusive and additional submittals

may be required. Columns "d" thru "r" have been completed by the Government. The Contractor shall complete columns "a," through "c," and "s" thru "x" and return two (2) completed copies to the Contracting Officer for approval within thirty (30) calendar days after Notice to Proceed. The approved submittal register will become the scheduling document and will be used to control submittals throughout the life of the contract. The submittal register and the progress schedules shall be coordinated.

3.3 SCHEDULING

Submittals covering component items forming a system or items that are interrelated shall be scheduled to be coordinated and submitted concurrently. Certifications to be submitted with the pertinent drawings shall be so scheduled. Adequate time (a minimum of 35 calendar days exclusive of mailing time) shall be allowed on the register for review and approval. No delays damages or time extensions will be allowed for time lost in late submittals.

3.4 TRANSMITTAL FORM (ENG Form 4025)

The Contractor shall complete ENG Form 4025, "Transmittal of Shop Drawings, Equipment Data, Material Samples, or Manufacturer’s Certificates of Compliance" and forward four (4) copies of same with each set of shop drawings, certificates of compliance, materials, fixtures and equipment lists submitted for approval. Three (3) copies of the ENG Form 4025 shall be submitted for information only data. No translucent or coated reproduced copies will be accepted. Each item submitted shall be listed separately on the ENG Form 4025. For new submittals or resubmittals mark the appropriate box; or resubmittals also insert previous transmittal number. Blank ENG Forms 4025 will be furnished by the Contracting Officer on request. Shop drawings shall be either blue line or black line prints on a white background. Blueprints are not acceptable. Each submittal shall be identified with the Contractor’s name, Contract Number, Transmittal Number, and Item Number to correspond with Item Number listed on ENG Form 4288. The following identification shall be marked on submittals as applicable:

Contract Number
Project Title and Location
Subcontractor’s Name
Supplier’s Name or Manufacturer’s Name
Specification Section and Paragraph Number
Contract Drawing File Number

3.5 SUBMITTAL PROCEDURE

Submittals shall be made as follows:

3.5.1 Procedures

Submittals required by the CONTRACT CLAUSES and other non-technical parts of the contract are not included in this section. The Contractor shall submit to the Contracting Officer: four (4) copies for approval, and three (3) copies for information only, of all shop drawings, certificates of compliance, materials, fixtures and equipment lists called for under the various headings of these specifications. These drawings, certificates and lists shall be complete and detailed and, prior to submission, must be reviewed and certified correct by the Contractor as required by the Quality Control System paragraph of the Construction Quality Control Section. If approved by the Contracting Officer, three (3) sets of all submittals will be retained by the Contracting Officer and one (1) set will be returned to the Contractor. Submittals for information only usually will not be returned. The Contractor is encouraged to submit paper documents that are printed/copied double-sided on recycled paper that has at least 20% postconsumer material.

(a) Resubmittals:

(1) If a submittal is returned for correction or is not satisfactory and is disapproved by the Contracting Officer, the Contractor shall resubmit the corrected material in the same quantity, including reproducibles as specified for the original submittal for approval within 14 days after receipt by him of the disapproved material.

3.5.2 Deviations

For submittals which include proposed deviations requested by the Contractor, the column "variation" of ENG Form 4025 shall be checked. The Contractor shall set forth in writing the reason for any deviations and annotate such deviations on the submittal. The Government reserves the right to rescind inadvertent approval of submittals containing unnoted deviations.

3.6 MECHANICAL ROOM LAYOUT DRAWINGS:

The Contractor shall submit a layout drawing, including appropriate elevations and sections as required, for each Mechanical Room showing the room arrangement he proposes for all pieces of equipment and appurtenances thereto (viz., air-conditioning equipment, boilers, compressors, hot water tanks, pumps, electrical control panels, ducts, piping, etc.), that are to be located in the room. The Mechanical Room floor slab will not be placed until the complete Mechanical Room layout drawing has been submitted and approved. No payment will be made to the Contractor for any of the equipment for the room or its installation until these drawings have been approved. Mechanical Room Layout Drawings shall be identified and submitted in the manner specified for "Shop Drawings". Equipment rooms shown on the drawings are of adequate size to accommodate equipment of required capacities, as available from several manufacturers, with sufficient space left for access, servicing, removal, etc. The use of equipment items with dimensions such as to crowd the space will not be permitted.

3.7 SPARE PARTS LIST AND MAINTENANCE OPERATIONS MANUALS:

Within 30 calendar days after approval of shop drawings and equipment lists, the Contractor shall submit, to the Contracting Officer, 3 copies of spare parts lists and operating and maintenance manuals as required under the various headings of these specifications. One reproducible, unfolded copy shall be provided of all operating instructions, control diagrams, etc., that are larger than 8-1/2-inches by 11-inches; this does not apply to standard manufacturer’s data.

(A) Spare parts lists shall contain the following listed information:

(1) Quantity of parts required for 120 days and one year of operation.

(2) Description of each spare part.

(3) Drawing number and shop drawing reference.

(4) Part equipment code number.

(5) Unit price of each item.

(6) Total price of all items.

(7) Procurement lead time with particular attention to long lead times.

(8) Name and address of nearest supplier.

(9) Such remarks and data as the manufacturer may consider pertinent.

(10) Complete parts list of all replaceable items.

(B) Operation, Maintenance, and Repair Manuals and Instructions:

(1) The requirements for furnishing operating, maintenance, and repair data/manuals and field instructions under this contract are specified in the Technical Specifications. The Contractor shall submit to the Contracting Officer, not later than 60 calendar days after the Notice to Proceed, an outline showing the proposed submittal date(s) of operation and maintenance manuals to be furnished the Government and the scheduled date(s) of all required field instructions to be provided by Contractor furnished personnel or manufacturer's representatives. All operation and maintenance manuals must be furnished to the Contracting Officer not later than 60 calendar days prior to turnover of the facility to the Government.

(2) Failure on the part of the Contractor to comply with requirements of this clause will result in no further payment until all required O&M data/manuals are submitted and accepted.

(3) All O&M data/manuals submittal data shall be entered in a separate section of the master submittal register.

3.8 COLOR BOARDS:

Five sets of color boards shall be submitted within 90 calendar days after receipt of Notice to Proceed for all projects which involve building construction or building modifications. The board shall include samples of colors and finishes of all interior surfaces such as walls, floors, and ceilings. Material shall be submitted in a standard 8-1/2 inches by 11 inches three-ring binder. Fold-outs may be employed to 25-1/2 inches by 33 inches as long as they refold within the standard binder. Actual material samples shall be displayed showing color, texture, pattern, finish, thickness, etc., for all appearance related items where choice exists. These samples shall be large enough to indicate true patterns. However, care should be taken to present materials in proportion to that which may be installed in a given situation. Samples shall be organized by color schemes with a separate sample for each scheme. The schemes shall be coordinated by room names and numbers shown on the architectural floor plans. Colors shall be labeled with generic color names. Project title and location (Base) shall be placed in the lower right-hand corner of each module. Where special finishes such as architectural concrete, carpet, or prefinished textured metal panels are required, separate samples not less than 8 inches x 10 inches square shall be submitted with the board. If more space is needed, more than one board per set may be submitted. The Contractor shall certify that he has reviewed the color boards in detail and that they are in strict accordance with the contract drawings and specifications except as may be otherwise explicitly stated. Submittal of the color board shall not relieve the Contractor of the responsibility to submit the samples required by the Technical Specifications.

3.9 AS-BUILT DRAWINGS:

(A) General: The Contractor shall send to Contracting Officer one (1) full set of reproducible construction record drawings (30" x 42" cronoflex or 3 mil double matte sheets) and two (2) copies of drawings on 3-1/2" floppy diskettes, in format compatible with AutoCAD, Release 12. The as-built prints shall be a record of the construction as installed and completed by the Contractor. They shall include all the information shown on

the contract set of drawings and a record of all deviations, modifications, or changes from those drawings, however minor, which were incorporated in the work, all additional work not appearing on the contract drawings, and all changes which are made after final inspection of the contract work.

In event the Contractor accomplishes additional work which changes the as-built conditions of the facility after submission of the as-built drawings, the Contractor shall furnish revised and/or additional drawings as required to depict as-built conditions. The requirements for these additional drawings will be the same as for the as-built drawings included in the original submission.

(B) Preliminary As-built Prints: The Contractor shall maintain one set of paper prints to show the as-built conditions. These as-built marked prints shall be kept current and available on the jobsite at all times. All changes from the contract plans which are made in the work or additional information which might be uncovered in the course of construction shall be accurately and neatly recorded as they occur by means of details and notes. The as-built marked prints will be jointly inspected for accuracy and completeness by the Contracting Officer's representative and a responsible representative of the construction Contractor prior to submission of each monthly pay estimate. The prints shall show the following information, but not be limited thereto:

(1) The location and description of any utility lines or other installations of any kind or description known to exist within the construction area. The location includes dimensions to permanent features.

(2) The location and dimensions of any changes within the building or structure.

(3) Correct grade or alignment of roads, structures or utilities if any changes were made from contract plans.

(4) Correct elevations if changes were made in site grading.

(5) Changes in details of design or additional information obtained from working drawings specified to be prepared and/or furnished by the Contractor including but not limited to fabrication, erection, installation plans and placing details, pipe sizes, insulation material, dimensions of equipment foundations, etc.

(6) The topography and grades of all drainage installed or affected as a part of the project construction.

(7) All changes or modifications which result from the final inspection.

(8) Options: Where contract drawings or specifications allow options, only the option selected for construction shall be shown on the as-built drawings.

(9) Submittal to Contracting Officer for Review and Approval: Not later than 2 weeks before acceptance of the project by the Government, the Contractor shall deliver to the Contracting Officer one (1) full set of reproducible construction record drawings (30" x 42" cronoflex or 3 mil double matte sheets) and two (2) copies of drawings on 3-1/2" floppy diskettes, in format compatible with AutoCAD, Release 12, and marked-up specifications complete with amendments, to depict as-built conditions. If upon review, the drawings are found to contain errors and/or omissions, they shall be returned to the Contractor for corrections. The Contractor shall complete the corrections and return the drawings to the Contracting Officer within ten (10)

calendar days. If a satisfactory set of as-built drawings are not received within the time limits defined, no further payment will be made to the Contractor until this requirement is satisfied.

3.10 CONTROL OF SUBMITTALS

The Contractor shall carefully control his procurement operations to ensure that each individual submittal is made on or before the Contractor scheduled submittal date shown on the approved "Submittal Register."

3.11 GOVERNMENT APPROVED SUBMITTALS

Upon completion of review of submittals requiring Government approval, the submittals will be identified as having received approval by being so stamped and dated. Three (3) copies of the submittal will be retained by the Contracting Officer and one (1) copy of the submittal will be returned to the Contractor.

3.12 INFORMATION ONLY SUBMITTALS

Normally submittals for information only will not be returned. Approval of the Contracting Officer is not required on information only submittals. These submittals will be used for information purposes. The Government reserves the right to require the Contractor to resubmit any item found not to comply with the contract. This does not relieve the Contractor from the obligation to furnish material conforming to the plans and specifications and will not prevent the Contracting Office from requiring removal and replacement of nonconforming material incorporated in the work. This does not relieve the Contractor of the requirement to furnish samples for testing by the Government laboratory or check testing by the Government in those instances where the technical specifications so prescribe.

3.13 STAMPS

Stamps used by the Contractor on the submittal data to certify that the submittal meets contract requirements shall be similar to the following:

CONTRACTOR

(Firm Name)

_____ Approved

_____ Approved with corrections as noted on submittal data and/or attached sheets(s).

SIGNATURE: _____

TITLE: _____

DATE: _____

-- End of Section --

INDEX

SECTION 01311

NETWORK ANALYSIS SYSTEM

PARAGRAPH	PAGE
PART 1 GENERAL	1
1.1 DFARS 252.236-7012 CONTRACTOR PROJECT MANAGEMENT SYSTEM	1
PART 2 PRODUCTS (NOT APPLICABLE)	5
PART 3 EXECUTION (NOT APPLICABLE)	5
PART 1 GENERAL	1
1.1 DFARS 252.236-7012 CONTRACTOR PROJECT MANAGEMENT SYSTEM	1
PART 2 PRODUCTS (NOT APPLICABLE)	5
PART 3 EXECUTION (NOT APPLICABLE)	5

SECTION 01311

NETWORK ANALYSIS SYSTEM

PART 1 GENERAL

1.1 DFARS 252.236-7012 CONTRACTOR PROJECT MANAGEMENT SYSTEM:

(a) General:

(1) The Contractor’s Project Management System is included to assure adequate planning and execution of the work, to assist the Contracting Officer in appraising the reasonableness of the schedule, to evaluate progress of the work, to make progress payments, and to make decisions relative to time and/or cost adjustments which may result from changes in the work.

(2) The management system is to be based on a computerized Network Analysis System (Critical Path Method) operated by on-site or off-site personnel. Input data shall be coordinated with the Contracting Officer prior to the monthly update report.

(3) The Contractor’s Project Management system is to be staffed and prepared pursuant to Contract Clauses, "SCHEDULE FOR CONSTRUCTION CONTRACTS", and "SUPERINTENDENCE BY THE CONTRACTOR". In preparing this system the Contractor assumes responsibility for conformance with contract requirements, planning, sequencing of work, and determining the construction means and methods.

(b) Basic System Requirements:

(1) This equipment shall be Year 2000 compliant and shall be able to accurately process date/time data (including, but not limited to, calculating, comparing, and sequencing) from, into, and between the twentieth and twenty-first centuries, including leap year calculations, when used in accordance with the product documentation provided by the Contractor, provided that all products (e.g. hardware, software, firmware) used in combination with other information technology shall accurately process date/time data if the other information technology properly exchanges date/time data with it.

(2) The computerized Network Analysis System (NAS) must be capable of providing the following minimum on-site services: network analysis by IJ or precedence notation, progress and cost reports, network comparisons, super and subnetworks, resource reporting, report writer allowing flexible formatting and summarization, and graphical output using a dot matrix or laser printer. In preparing the NAS, the Contractor shall insure that it represents an accurate and efficient plan for accomplishing the work.

(3) The Contractor’s project management system must be capable of at least weekly update and production of physical update reports, percent complete reports, and cost reports for payment purposes. Management effort required will include capability to analyze factors delaying progress and altering logic and durations on an interactive basis to maintain an up-to-date active management schedule.

(4) The Contractor may use either a network analysis system functionally equivalent to that used by the Contracting Officer or any other IBM compatible Critical Path Method (CPM) network analysis system. The Contracting Officer uses OPEN Plan Scheduling software by WELCOM Software Technology, 1325 South Dairy Ashford Road, Suite 125, Houston, Texas 77077, telephone (713) 558-0514. Should the Contractor select to use an alternate scheduling system, the data shall be in a format directly readable by OPEN Plan or in the "Standard Data Exchange Format" as defined in APPENDIX B of ER

1-1-11 dated 15 MAR 90. Copies of APPENDIX B are available upon request. In addition to the specified number of paper copies of reports and network diagrams, the Contractor is required to provide to the Contracting Officer one set of IBM compatible data diskettes (1.2 MB 5.25" double density disks or 1.44 MB 3.5" diskettes) of all required network analysis submissions and updates.

(c) Detailed System Requirements:

(1) The system shall consist of diagrams and accompanying mathematical analysis. Flexibility of formatting and summarization of reports will be provided by selecting and prioritizing from the following menu of information: activity number (Precedence System) or numbers (I,J notation), duration in work days, activity description, code relating to the party responsible for performing the work, cost, manpower, estimate or labor hours, list of major items of construction equipment with anticipated usage, cost item or pay item the activity is associated with, milestones, identification of submittal when applicable, early start date, late start date, early finish date, late finish date, anticipated start date, float, a list of all activities that precede or follow each activity, and the definable feature of work each activity is associated with.

(2) Windowing (chronologically selected portions of the network) specified for reports or diagrams must be possible. A network and logic diagram, will be provided for the initially approved network as well as each update which incorporated a logic change.

(3) In addition to construction activities, the schedule shall include activities for submittal of materials, samples, shop drawings, operation and maintenance manuals, master equipment lists, spare parts lists, and other related documents. Also included shall be activities for the procurement of all major materials and equipment, including fabrication and delivery, installation and testing. Of particular interest shall be material and equipment procurement items that are expected to be critical to the progress of actual construction. Government activities, such as, review and approval of materials, equipment, testing, and other actions that affect construction progress shall be shown.

(4) The Contractor shall resource load all construction activities. As a minimum, resource loading shall identify equipment, management, skilled and unskilled labor requirements. The Contractor may at his option decide on greater detail for his own purposes, but if this option is elected, the system must be able to consolidate resources into the above defined categories for use by the Contracting Officer.

(5) The Contractor shall incorporate any and all milestone and contract required events which may be specified elsewhere within these specifications. Should milestone events not be specifically identified by the Government within these specifications, the Contractor shall identify at least five percent (5%) of the network activities and designate them as milestone activities.

(6) Logic Diagrams:

(a) Logic diagrams shall show the order and interdependence of activities and the sequence in which the work is to be accomplished as planned by the Contractor.

(b) Detailed networks need not be time scaled, but drafted to have a continuous flow from left to right, showing how the start of a given activity is dependent on the completion of preceding activities, and how its completion restricts the start of following activities.

(c) A logic diagram of the complete project shall be submitted with the initial NAS, showing each activity number or numbers, duration, description, with the critical path easily identified. Update diagrams will be provided as required by logic changes (but not more frequently than the monthly update).

(7) Each activity, except Government activities and nonpaid activities, such as, the preparation of submittals and master equipment lists, shall be assigned a corresponding monetary value. The value shall be based upon a cost estimate made for each activity and shall represent all the elements of cost, i.e., labor, equipment, materials, overhead, and profit. The cost of each activity shall be identified to the appropriate contract bid item. Upon approval of the schedule, activity values shall be frozen and no changes in the value of any activity shall be permitted without formal approval from the Contracting Officer. The cost estimate for each activity shall be submitted to the Contracting Officer. These activity values shall equal the contract amount.

(8). In addition to the detailed schedule, a summary schedule shall be developed by the Contractor. The summary schedule shall consist of a minimum of thirty (30) activities and be updated monthly.

(d). Submission and approval of the system shall be as follows:

(1). The Contractor shall submit for review and approval a description of the type and capabilities of the computerized network system proposed to be used. Submission shall be within three (3) calendar days of the notice to proceed.

(2). A detailed network defining the Contractor’s planned operations during the first sixty (60) calendar days of the contract shall be submitted within fifteen (15) days of the notice to proceed. The first sixty (60) days of the preliminary schedule is a fragmentary network (sub-network) of the total contract schedule and shall conform in all respects with the details and requirements for diagrams and mathematical analysis as specified. The Contractor’s general approach for the remainder of the project shall be shown. At midmonth the Contractor shall submit an updated network of actual progress on this network for partial payment. This report shall contain costs of activities completed or partially completed with a tabulation of total earnings.

(3). The complete network system consisting of the detailed network mathematical analysis (including on-site manpower loading schedule and equipment schedule) and network diagrams shall be submitted for approval within (30) calendar days after receipt of the notice to proceed.

(4). The Contractor shall participate in a review and evaluation of the proposed network diagrams and mathematical analysis by the Contracting Officer. Any revisions necessary as a result of this review shall be resubmitted for approval of the Contracting Officer within three (3) calendar days after the conference. The approved schedule shall be used by the Contractor for planning, organizing, directing the work, reporting progress, and requesting payment for work accomplished.

(e). Network Modifications:

(1). In those cases where the contract performance is delayed due to causes beyond the control of the Contractor, and a time extension may be allowed under one or more of the Contract Clauses entitled "CHANGES", "DIFFERING SITE CONDITIONS", "DEFAULT" (Fixed Price Construction), "SUSPENSION OF WORK", or other applicable clauses, as a condition precedent to granting a

time extension, the Contractor shall submit a time proposal in the format of a subnet diagram showing the activities affected by the delay.

(2). Change order proposals shall include description or listing of all proposed changes to the network, by activity, and demonstrate the effect on the contract required completion date. A complete list of activities changed and a subnet of activities affected by the change shall be submitted.

(3). Float or slack is defined as the amount of time between the early start date and the late start date, or the early finish date and the late finish date, of any of the activities in the NAS schedule. Float or slack is not time for the exclusive use or benefit of either the Government or the Contractor. Extensions of time for performance may be granted to the extent that equitable time adjustment for the activities affected exceed the total float or where the impact on contract completion can be shown. The contract completion date is fixed, and will be amended only by modifications which include time and are signed by the Contracting Officer.

(4). RAPID resolution of change orders and the granting of other time extensions, where authorized by the Contracting Officer, is a critical part of the overall management system. Implementation of all justified activity and logic changes shall be made and reflected in the next monthly update after approval of the Contracting Officer.

(5). If, in the opinion of the Contracting Officer, the current schedule no longer accurately reflects the Contractor’s real plan for accomplishing the work, or no longer reflects a viable way of finishing work on schedule, the Contractor shall be directed to revise the schedule and submit it for approval within seven (7) Calendar days of direction.

(f). Reports:

(1). Monthly update reports will be submitted at midmonth showing current status and actual start and finish dates of project activities, and will be capable of comparing the current status with the approved base schedule. Each monthly update report shall be stored on the Contractor’s computer until the final pay estimate is processed. The content of the monthly update shall be flexible to show items listed in the menu. The midmonth report shall be used for partial payments.

(2). A meeting shall be held three (3) workdays before the delivery of the midmonth report to discuss all input data. If the Contractor desires to make changes in his method of operation and scheduling, he shall clearly present the proposed changes.

(3). A narrative report shall be submitted with the midmonth report indicating current and anticipated problems, delaying factors, and conditions, that are impacting the Contractor’s work effort. An analysis showing the reasons for the delay/gain and their impact upon the current schedule shall be included. When it is apparent that scheduled milestone and completion dates will not be met, the Contractor shall propose specific methods he intends to implement to bring the project back on schedule at no cost to the Government. Such measures may include but are not limited to:

(a). Increasing construction manpower in such quantities and crafts as will substantially eliminate the backlog of work effort.

(b). Increasing the number of working hours per shift; shifts per workday; workdays per week; the amount of construction equipment; or any combination thereof.

(c). Rescheduling of activities to achieve maximum practical concurrency of work efforts.

(4). The Contractor shall implement such procedures as may be necessary for the active participation by his subcontractors in preparing and updating the schedule. Subcontractors shall be provided with schedules which identify the interfaces of their work with the work of others. As a minimum, the Contractor shall provide bar graphs to each major subcontractor showing activity times with plots on an Early Start basis. Copies of these schedules shall also be provided to the Contracting Officer. The relationship between subcontractor and interdependency of work shall be managed by the Contractor. When these interdependencies are violated or impaired, the Contractor shall identify the problem, resolve it, and provide the information to the Contracting Officer as part of the monthly report.

(g). Payment Requests:

(1). The monthly update report shall be used as a basis for the monthly partial pay estimate. The report will state the cost, actual percent complete, and current value of partially completed or completed work. Subtotals from subnets representing separate areas of construction will be given, along with a grand total of dollar value of work completed for the project.

(2). The first payment shall not be made until the preliminary schedule has been approved by the Contracting Officer and the second payment shall not be made until the full schedule has been approved by the Contracting Officer. If, in the judgement of the Contracting Officer, the Contractor fails or refuses to provide an approved schedule and other progress data specified, the Contractor shall be deemed not to have provided the required information upon which payments may be made.

(3). Activities submitted for payment shall be based on the approved network activities and monetary amount. No payment shall be made for activities that have not been performed in accordance with the approved logic.

(4). Payment for activities conducted when previously dependent activities have not been completed or accepted due to quality defects may be withheld at the discretion of the Contracting Officer.

PART 2 PRODUCTS (NOT APPLICABLE)

PART 3 EXECUTION (NOT APPLICABLE)

-- End of Section --

INDEX

SECTION 01415

METRIC MEASUREMENTS

PARAGRAPH		PAGE
PART 1	GENERAL	1
1.1	REFERENCES	1
1.2	GENERAL	1
1.3	USE OF MEASUREMENTS	1
1.4	COORDINATION	2
1.5	RELATIONSHIP TO SUBMITTALS	2
PART 2	PRODUCTS (NOT APPLICABLE)	2
PART 3	EXECUTION (NOT APPLICABLE)	2

SECTION 01415

METRIC MEASUREMENTS

PART 1 GENERAL

1.1 REFERENCES

The publications listed below form a part of this specification to the extent referenced. The publications are referred to in the text by basic designation only.

AMERICAN SOCIETY FOR TESTING AND MATERIALS (ASTM)

ASTM E 380	(1993) Practice for Use of the International System of Units (SI)
ASTM E 621	(1994) Practice for Use of Metric (SI) Units in Building Design and Construction

1.2 GENERAL

This project includes metric units of measurements. The metric units used are the International System of Units (SI) developed and maintained by the General Conference on Weights and Measures (CGPM); the name International System of Units and the international abbreviation SI were adopted by the 11th CGPM in 1960. A number of circumstances require that both metric SI units and English inch-pound (I-P) units be included in a section of the specifications. When both metric and I-P measurements are included, the section may contain measurements for products that are manufactured to I-P dimensions and then expressed in mathematically converted metric value (soft metric) or, it may contain measurements for products that are manufactured to an industry recognized rounded metric (hard metric) dimensions but are allowed to be substituted by I-P products to comply with the law. Dual measurements are also included to indicate industry and/or Government standards, test values or other controlling factors, such as the code requirements where I-P values are needed for clarity or to trace back to the referenced standards, test values or codes.

1.3 USE OF MEASUREMENTS

Measurements shall be either in SI or I-P units as indicated, except for soft metric measurements or as otherwise authorized. The Contractor shall be responsible for all associated labor and materials when authorized to substitute one system of units for another and for the final assembly and performance of the specified work and/or products.

1.3.1 Hard Metric

A hard metric measurement is indicated by an SI value with no expressed correlation to an I-P value, i.e., where an SI value is not an exact mathematical conversion of an I-P value, such as the use of 100 mm in lieu of 4 inches. Hard metric measurements are often used for field data such as distance from one point to another or distance above the floor. Products are considered to be hard metric when they are manufactured to

metric dimensions or have an industry recognized metric designation.

1.3.2 Soft Metric

a. A soft metric measurement is indicated by an SI value which is a mathematical conversion of the I-P value shown in parentheses (e.g. 38.1 mm (1-1/2 inches)). Soft metric measurements are used for measurements pertaining to products, test values, and other situations where the I-P units are the standard for manufacture, verification, or other controlling factor. The I-P value shall govern while the metric measurement is provided for information.

b. A soft metric measurement is also indicated for products that are manufactured in industry designated metric dimensions but are required by law to allow substitute I-P products. These measurements are indicated by a manufacturing hard metric product dimension followed by the substitute I-P equivalent value in parentheses (e.g., 190 x 190 x 390 mm (7-5/8 x 7-5/8 x 15-5/8 inches)).

1.3.3 Neutral

A neutral measurement is indicated by an identifier which has no expressed relation to either an SI or an I-P value (e.g., American Wire Gage (AWG) which indicates thickness but in itself is neither SI nor I-P).

1.4 COORDINATION

Discrepancies, such as mismatches or product unavailability, arising from use of both metric and non-metric measurements and discrepancies between the measurements in the specifications and the measurements in the drawings shall be brought to the attention of the Contracting Officer for resolution.

1.5 RELATIONSHIP TO SUBMITTALS

Submittals for Government approval or for information only shall cover the SI or I-P products actually being furnished for the project. The Contractor shall submit the required drawings and calculations in the same units used in the contract documents describing the product or requirement unless otherwise instructed or approved. The Contractor shall use ASTM E 380 and ASTM E 621 as the basis for establishing metric measurements required to be used in submittals.

PART 2 PRODUCTS (NOT APPLICABLE)

PART 3 EXECUTION (NOT APPLICABLE)

-- End of Section --

INDEX

SECTION 01440

CONTRACTOR QUALITY CONTROL

PARAGRAPH		PAGE
PART 1	GENERAL	1
1.1	REFERENCES	1
PART 2	PRODUCTS (Not Applicable)	1
PART 3	EXECUTION	1
3.1	GENERAL	1
3.2	QUALITY CONTROL PLAN	1
3.3	COORDINATION MEETING	3
3.4	QUALITY CONTROL ORGANIZATION	3
3.5	SUBMITTALS	5
3.6	CONTROL	5
3.7	TESTS	7
3.8	COMPLETION INSPECTION	8
3.9	DOCUMENTATION	9
3.10	IMPLEMENTATION OF GOVERNMENT RESIDENT MANAGEMENT SYSTEM FOR CONTRACTOR QUALITY CONTROL OF CONTRACT	10
3.11	NOTIFICATION OF NONCOMPLIANCE	11
3.12	CONSTRUCTION CONTROL MANUAL	11

SECTION 01440

CONTRACTOR QUALITY CONTROL

PART 1 GENERAL

1.1 REFERENCES

The publications listed below form a part of this specification to the extent referenced. The publications are referred to in the text by basic designation only.

AMERICAN SOCIETY FOR TESTING AND MATERIALS (ASTM)

ASTM D 3740	(1994a) Minimum Requirements for Agencies Engaged in the Testing and/or Inspection of Soil and Rock as Used in Engineering Design and Construction
ASTM E 329	(1993b) Agencies Engaged in the Testing and/or Inspection of Materials Used in Construction

PART 2 PRODUCTS (Not Applicable)

PART 3 EXECUTION

3.1 GENERAL

The Contractor is responsible for quality control and shall establish and maintain an effective quality control system in compliance with the Contract Clause entitled "Inspection of Construction." The quality control system shall consist of plans, procedures, and organization necessary to produce an end product which complies with the contract requirements. The system shall cover all construction operations, both onsite and offsite, and shall be keyed to the proposed construction sequence. The project superintendent will be held responsible for the quality of work on the job and is subject to removal by the Contracting Officer for non-compliance with quality requirements specified in the contract. The project superintendent in this context shall mean the individual with the responsibility for the overall management of the project including quality and production.

3.2 QUALITY CONTROL PLAN

3.2.1 General

The Contractor shall furnish for review by the Government, not later than 15 days after receipt of notice to proceed, the Contractor Quality Control (CQC) Plan proposed to implement the requirements of Section 00800, Paragraph, "Inspection of Construction." The plan shall identify personnel, procedures, control, instructions, test, records, and forms to be used. Construction will be permitted to begin only after acceptance of the CQC Plan unless specific written authority is granted by the Contracting Officer. Work outside of the features of work included in an accepted plan will not be permitted to begin until acceptance of a CQC Plan or an interim plan containing the additional features of work to be started.

3.2.2 Content of the CQC Plan

The CQC Plan shall include, as a minimum, the following to cover all construction operations, both onsite and offsite, including work by subcontractors, fabricators, suppliers, and purchasing agents:

a. A description of the quality control organization, including a chart showing lines of authority and acknowledgment that the CQC staff shall implement the three phase control system for all aspects of the work specified. The staff shall include a CQC System Manager who shall report to the project superintendent.

b. The name, qualifications (in resume format), duties, responsibilities, and authorities of each person assigned a CQC function.

c. A copy of the letter to the CQC System Manager signed by an authorized official of the firm which describes the responsibilities and delegates sufficient authorities to adequately perform the functions of the CQC System Manager, including authority to stop work which is not in compliance with the contract. The CQC System Manager shall issue letters of direction to all other various quality control representatives outlining duties, authorities, and responsibilities. Copies of these letters will also be furnished to the Government.

d. Procedures for scheduling, reviewing, certifying, and managing submittals, including those of subcontractors, offsite fabricators, suppliers, and purchasing agents. These procedures shall be in accordance with Section 01300 SUBMITTAL PROCEDURES.

e. Control, verification, and acceptance testing procedures for each specific test to include the test name, specification paragraph requiring test, feature of work to be tested, test frequency, and person responsible for each test. (Laboratory facilities will be approved by the Contracting Officer.)

f. Procedures for tracking preparatory, initial, and follow-up control phases and control, verification, and acceptance tests including documentation.

g. Procedures for tracking construction deficiencies from identification through acceptable corrective action. These procedures will establish verification that identified deficiencies have been corrected.

h. Reporting procedures, including proposed reporting formats.

I. A list of the definable features of work. A definable feature of work is a task which is separate and distinct from other tasks and has separate control requirements. It could be identified by different trades or disciplines, or it could be work by the same trade in a different environment. Although each section of the specifications may generally be considered as a definable feature of work, there are frequently more than one definable feature under a particular section. This list will be agreed upon during the coordination meeting.

3.2.3 Acceptance of Plan

Acceptance of the Contractor’s plan is required prior to the start of construction. Acceptance is conditional and will be predicated on satisfactory performance during the construction. The Government reserves the right to require the Contractor to make changes in his CQC Plan and operations including removal of personnel, as necessary, to obtain the quality specified.

3.2.4 Notification of Changes

After acceptance of the CQC Plan, the Contractor shall notify the Contracting Officer in writing of any proposed change. Proposed changes are subject to acceptance by the Contracting Officer.

3.3 COORDINATION MEETING

After the Preconstruction Conference, before start of construction, and prior to acceptance by the Government of the CQC Plan, the Contractor shall meet with the Contracting Officer or Authorized Representative and discuss the Contractor's quality control system. The CQC Plan shall be submitted for review a minimum of 14 calendar days prior to the Coordination Meeting. During the meeting, a mutual understanding of the system details shall be developed, including the forms for recording the CQC operations, control activities, testing, administration of the system for both onsite and offsite work, and the interrelationship of Contractor's Management and control with the Government's Quality Assurance. Minutes of the meeting shall be prepared by the Government and signed by both the Contractor and the Contracting Officer. The minutes shall become a part of the contract file. There may be occasions when subsequent conferences will be called by either party to reconfirm mutual understandings and/or address deficiencies in the CQC system or procedures which may require corrective action by the Contractor.

3.4 QUALITY CONTROL ORGANIZATION

3.4.1 General

The requirements for the CQC organization are a CQC System Manager and sufficient number of additional qualified personnel to ensure contract compliance. The Contractor shall provide a CQC organization which shall be at the site at all times during progress of the work and with complete authority to take any action necessary to ensure compliance with the contract. All CQC staff members shall be subject to acceptance by the Contracting Officer.

3.4.2 CQC System Manager

The Contractor shall identify as CQC System Manager an individual within his organization at the site of the work who shall be responsible for overall management of CQC and have the authority to act in all CQC matters for the Contractor. The CQC System Manager shall be a construction person with a minimum of 5 years in related work. This CQC System Manager shall be on the site at all times during construction and will be employed by the prime Contractor. The CQC System Manager shall be assigned no other duties. An alternate for the CQC System Manager will be identified in the plan to serve in the event of the System Manager's absence. The requirements for the alternate will be the same as for the designated CQC System Manager.

3.4.3 CQC Personnel

In addition to CQC personnel specified elsewhere in the contract, the Contractor shall provide as part of the CQC organization specialized personnel to assist the CQC System Manager for the following areas: electrical, mechanical, civil, structural, and architectural. These individuals shall be directly employed by the prime Contractor, unless waived in writing by the Contracting Officer; be responsible to the CQC System Manager; be physically present at the construction site during work on their areas of responsibility; have the necessary education and/or experience in accordance with the experience matrix listed herein. These individuals shall have no other duties other than quality control.

Experience Matrix

Area	Qualifications

a. Civil	Graduate Civil Engineer with 2 years experience in the type of work being performed on this project or technician with 5 yrs related experience
b. Mechanical	Graduate Mechanical Engineer with 2 yrs experience or person with 5 yrs related experience
c. Electrical	Graduate Electrical Engineer with 2 yrs related experience or person with 5 yrs related experience
d. Structural	Graduate Structural Engineer with 2 yrs experience or person with 5 yrs related experience
e. Architectural	Graduate Architect with 2 yrs experience or person with 5 yrs related experience

3.4.4 Additional Requirement

In addition to the above experience and/or education requirements the CQC System Manager shall have completed the course entitled "Construction Quality Management For Contractors". This course is offered quarterly by the Los Angeles District, contact the Contracting Officer for more information.

3.4.5 Organizational Changes

The Contractor shall maintain his CQC staff at full strength at all times. When it is necessary to make changes to the CQC staff the Contractor shall revise the CQC Plan to reflect the changes and submit the changes to the Contracting Officer for acceptance.

3.5 SUBMITTALS

Submittals shall be made as specified in Section 01300 SUBMITTAL PROCEDURES. The CQC organization shall be responsible for certifying that all submittals are in compliance with the contract requirements.

3.6 CONTROL

Contractor Quality Control is the means by which the Contractor ensures that the construction, to include that of subcontractors and suppliers, complies with the requirements of the contract. At least three phases of control shall be conducted by the CQC System Manager for each definable feature of work as follows:

3.6.1 Preparatory Phase

This phase shall be performed prior to beginning work on each definable feature of work and shall include:

a. A review of each paragraph of applicable specifications.

b. A review of the contract drawings.

c. A check to assure that all materials and/or equipment have been tested, submitted, and approved.

d. Review of provisions that have been made to provide required control inspection and testing.

e. Examination of the work area to assure that all required preliminary work has been completed and is in compliance with the contract.

f. A physical examination of required materials, equipment, and sample work to assure that they are on hand, conform to approved shop drawings or submitted data, and are properly stored.

g. A review of the appropriate activity hazard analysis to assure safety requirements are met.

h. Discussion of procedures for controlling quality of the work including repetitive deficiencies. Document construction tolerances and workmanship standards for that feature of work.

I. A check to ensure that the portion of the plan for the work to be performed has been accepted by the Contracting Officer.

j. Discussion of the initial control phase.

k. The Government shall be notified at least 48 hours in advance of beginning the preparatory control phase. This phase shall include a meeting conducted by the CQC System Manager and attended by the superintendent, other CQC personnel (as applicable), and the foreman responsible for the definable feature. The results of the preparatory phase actions shall be documented by separate minutes prepared by the CQC System Manager and attached to the daily CQC report. The Contractor shall instruct applicable workers as to the acceptable level of workmanship required in order to meet contract specifications.

3.6.2 Initial Phase

This phase shall be accomplished at the beginning of a definable feature of work. The following shall be accomplished:

a. A check of work to ensure that it is in full compliance with contract requirements. Review minutes of the preparatory meeting.

b. Verify adequacy of controls to ensure full contract compliance. Verify required control inspection and testing.

c. Establish level of workmanship and verify that it meets minimum acceptable workmanship standards. Compare with required sample panels as appropriate.

d. Resolve all differences.

e. Check safety to include compliance with and upgrading of the safety plan and activity hazard analysis. Review the activity analysis with each worker.

f. The Government shall be notified at least 48 hours in advance of beginning the initial phase. Separate minutes of this phase shall be prepared by the CQC System Manager and attached to the daily CQC report. Exact location of initial phase shall be indicated for future reference and comparison with follow-up phases.

g. The initial phase should be repeated for each new crew to work onsite, or any time acceptable specified quality standards are not being met.

3.6.3 Follow-up Phase

Daily checks shall be performed to assure control activities, including control testing, are providing continued compliance with contract requirements, until completion of the particular feature of work. The checks shall be made a matter of record in the CQC documentation. Final follow-up checks shall be conducted and all deficiencies corrected prior to the start of additional features of work which may be affected by the deficient work. The Contractor shall not build upon or conceal non-conforming work.

3.6.4 Additional Preparatory and Initial Phases

Additional preparatory and initial phases shall be conducted on the same definable features of work if the quality of on-going work is unacceptable, if there are changes in the applicable CQC staff, onsite production supervision or work crew, if work on a definable feature is resumed after a substantial period of inactivity, or if other problems develop.

3.7 TESTS

3.7.1 Testing Procedure

The Contractor shall perform specified or required tests to verify that control measures are adequate to provide a product which conforms to contract requirements. Upon request, the Contractor shall furnish to the Government duplicate samples of test specimens for possible testing by the Government. Testing includes operation and/or acceptance tests when specified. The Contractor shall procure the services of a Corps of Engineers approved testing laboratory or establish an approved testing laboratory at the project site. The Contractor shall perform the following activities and record and provide the following data:

a. Verify that testing procedures comply with contract requirements.

b. Verify that facilities and testing equipment are available and comply with testing standards.

c. Check test instrument calibration data against certified standards.

d. Verify that recording forms and test identification control number system, including all of the test documentation requirements, have been prepared.

e. Results of all tests taken, both passing and failing tests, will be recorded on the CQC report for the date taken. Specification paragraph reference, location where tests were taken, and the sequential control number identifying the test will be given. If approved by the Contracting Officer, actual test reports may be submitted later with a reference to the test number and date taken. An information copy of tests performed by an offsite or commercial test facility will be provided directly to the Contracting Officer. Failure to submit timely test reports as stated may result in nonpayment for related work performed and disapproval of the test facility for this contract.

3.7.2 Testing Laboratories

3.7.2.1 Capability Check

The Government reserves the right to check laboratory equipment in the proposed laboratory for compliance with the standards set forth in the

contract specifications and to check the laboratory technician’s testing procedures and techniques. Laboratories utilized for testing soils, concrete, asphalt, and steel shall meet criteria detailed in ASTM D 3740 and ASTM E 329.

3.7.3 On-Site Laboratory

The Government reserves the right to utilize the Contractor’s control testing laboratory and equipment to make assurance tests and to check the Contractor’s testing procedures, techniques, and test results at no additional cost to the Government.

3.7.4 Furnishing or Transportation of Samples for Testing

Costs incidental to the transportation of samples or materials will be borne by the Contractor. Samples of materials for test verification and acceptance testing by the Government shall be delivered to the QA laboratory designated by the Contracting Officer.

Coordination for each specific test, exact delivery location and dates will be made through the Area Office.

3.8 COMPLETION INSPECTION

3.8.1 Pre-Final Inspection

At the completion of all work or any increment thereof established by a completion time stated in Section 00800, Paragraph "Commencement, Prosecution, and Completion of Work," or stated elsewhere in the specifications, the CQC System Manager shall conduct an inspection of the work and develop a "punch list" of items which do not conform to the approved drawings and specifications. Such a list of deficiencies shall be included in the CQC documentation, as required by paragraph DOCUMENTATION below, and shall include the estimated date by which the deficiencies will be corrected. Once this is accomplished the Contractor shall notify the Government that the facility is complete and is ready for the Government’s "Prefinal" inspection. The Government will perform this inspection to verify that the facility is complete and ready to be occupied. A Government "Prefinal Punch List" will be developed as a result of this inspection. The Contractor’s CQC System Manager shall ensure that all items on this list have been corrected and so notify the Government so that a "Final" inspection with the customer can be scheduled. Any items noted on the "Final" inspection shall be corrected in a timely manner. These inspections and any deficiency corrections required by this paragraph will be accomplished within the time slated for completion of the entire work or any particular increment thereof if the project is divided into increments by separate completion dates.

3.8.2 Final Acceptance Inspection

The Contractor’s Quality Control Inspection personnel, his superintendent or other primary management person and the Contracting Officer’s Representative will be in attendance at this inspection. Additional Government personnel including, but not limited to, those from Base/Post Civil Facility Engineer user groups, and major commands may also be in attendance. The final acceptance inspection will be formally scheduled by the Contracting Officer based upon notice from the Contractor. This notice will be given to the Contracting Officer at least 14 days prior to the final acceptance inspection and must include the Contractor’s assurance that all specific items previously identified to the Contractor as being acceptable, along with all remaining work performed under the contract, will be complete and acceptable by the date scheduled for the final acceptance inspection. Failure of the Contractor to have all contract work acceptably complete for this inspection will be cause for the Contracting Officer to bill the Contractor for the Government’s

additional inspection cost in accordance with Section 00800, Paragraph, "Inspection of Construction".

3.9 DOCUMENTATION

The Contractor shall maintain current records providing factual evidence that required quality control activities and/or tests have been performed. These records shall include the work of subcontractors and suppliers and shall be on an acceptable form that includes, as a minimum, the following information:

a. Contractor/subcontractor and their area of responsibility.

b. Operating plant/equipment with hours worked, idle, or down for repair.

c. Work performed each day, giving location, description, and by whom. When Network Analysis (NAS) is used, identify each phase of work performed each day by NAS activity number.

d. Test and/or control activities performed with results and references to specifications/drawings requirements. The control phase should be identified (Preparatory, Initial, Follow-up). List deficiencies noted along with corrective action.

e. Quantity of materials received at the site with statement as to acceptability, storage, and reference to specifications/drawings requirements.

f. Submittals reviewed, with contract reference, by whom, and action taken.

g. Off-site surveillance activities, including actions taken.

h. Job safety evaluations stating what was checked, results, and instructions or corrective actions.

I. Instructions given/received and conflicts in plans and/or specifications.

j. Contractor’s verification statement.

These records shall indicate a description of trades working on the project; the number of personnel working; weather conditions encountered; and any delays encountered. These records shall cover both conforming and deficient features and shall include a statement that equipment and materials incorporated in the work and workmanship comply with the contract. The original and one copy of these records in report form shall be furnished to the Government daily within 24 hours after the date(s) covered by the report, except that reports need not be submitted for days on which no work is performed. As a minimum, one report shall be prepared and submitted for every seven days of no work and on the last day of a no work period. All calendar days shall be accounted for throughout the life of the contract. The first report following a day of no work shall be for that day only. Reports shall be signed and dated by the CQC System Manager. The report from the CQC System Manager shall include copies of test reports and copies of reports prepared by all subordinate quality control personnel.

3.10 IMPLEMENTATION OF GOVERNMENT RESIDENT MANAGEMENT SYSTEM FOR CONTRACTOR QUALITY CONTROL OF CONTRACT

The Contractor shall utilize a Government furnished CQC Programming Module (A computerized executable file which is DOS based and operates on a minimum

of 80386 IBM compatible computers). The Module includes a Daily CQC Reporting System form which must also be used. This form may be in addition to other Contractor desired reporting forms. However, all other such reporting forms shall be consolidated into this one Government specified Daily CQC Report Form. The Contractor will also be required to complete Government-Furnished Module elements which includes, but is not limited to, Prime Contractor staffing; letter codes; planned cumulative progress earnings; subcontractor information showing trade, name, address, point-of-contact, and insurance expiration dates; definable features of work; pay activity and activity information; required Quality Control tests tied to individual activities; planned User Schooling tied to specific specification paragraphs and contractor activities; Installed Property Listing, Transfer Property Listing and submittal information relating to specification section, description, activity number, review period and expected procurement period. The sum of all activity values shall equal the contract amount, and all Bid Items, Options and Additives shall be separately identified, in accordance with the "Pricing Schedule". Bid Items may include multiple Activities, but Activities may only be assigned to one such Bid Item. This Module shall be completed to the satisfaction of the Contracting Officer prior to any contract payment (except for Bonds, Insurance and/or Mobilization, as approved by the Contracting Officer) and shall be updated as required.

(1) During the course of the contract, the Contractor will receive various Quality Assurance comments from the Government that will reflect corrections needed to Contractor activities or reflect outstanding or future items needing the attention of the Contractor. The Contractor will acknowledge receipt of these comments by specific number reference on his Daily CQC Report, and will also reflect on his Daily CQC Report when these items are specifically completed or corrected to permit Government verification.

(2) The Contractor’s schedule system shall include, as specific and separate activities, all Preparatory Phase Meetings (inspections); all O&M Manuals; and all Test Plans of Electrical and Mechanical Equipment or Systems that require validation testing or instructions to Government representatives.

3.11 NOTIFICATION OF NONCOMPLIANCE

The Contracting Officer will notify the Contractor of any detected noncompliance with the foregoing requirements. The Contractor shall take immediate corrective action after receipt of such notice. Such notice, when delivered to the Contractor at the worksite, shall be deemed sufficient for the purpose of notification. If the Contractor fails or refuses to comply promptly, the Contracting Officer may issue an order stopping all or part of the work until satisfactory corrective action has been taken. No part of the time lost due to such stop orders shall be made the subject of claim for extension of time or for excess costs or damages by the Contractor in accordance with FAR 52.242-14.

3.12 CONSTRUCTION CONTROL MANUAL

In addition to the requirements specified in the various Technical Specifications hereinafter, test procedures and minimum number of tests will be performed in accordance with SPK PAM 415-1-2, "Construction Control Manual". Neither the specified minimum number of tests nor the lack of them shall in any way limit or relieve the Contractor of his responsibility to perform adequate tests to assure compliance with the quality requirements of these specifications. The referenced standards listed in this Construction Control Manual shall be of the latest issue unless otherwise specified.

The "Construction Control Manual" may be examined in the following office locations, and will be furnished to the Contractor:

Corps of Engineers
Los Angeles District
Construction Management Section
911 Wilshire Blvd.
Los Angeles, California

Corps of Engineers
Vandenberg Resident Office,
Building M11452
1174 Iceland Avenue
Vandenberg AFB, California

-- End of Section --

(Sample of typical Contractor's Test Report)

TEST REPORT

STRUCTURAL OR BUILDING _____

CONTRACT NO. _____

DESCRIPTION OF ITEM, SYSTEM OR PART OF SYSTEM TESTED: _____

_____

_____

_____

_____

DESCRIPTION OF TEST: _____

_____

_____

_____

_____

_____

NAME AND TITLE OF PERSON IN CHARGE OF PERFORMING TESTS FOR CONTRACTOR:

NAME _____

TITLE _____

SIGNATURE _____

I HEREBY CERTIFY THAT THE ABOVE DESCRIBED ITEM, SYSTEM OR PART OF SYSTEM HAS BEEN TESTED AS INDICATED ABOVE AND FOUND TO BE ENTIRELY SATISFACTORY AS REQUIRED IN THE CONTRACT SPECIFICATIONS.

_____

SIGNATURE OF CONTRACTOR QUALITY CONTROL INSPECTOR

DATE _____

REMARKS: _____

_____

_____

_____

_____

_____

(Sample of Typical DAILY CONSTRUCTION QUALITY CONTROL REPORT)

CONTRACTOR'S NAME
(Address)

DAILY CONSTRUCTION QUALITY CONTROL REPORT

Date: _____ Report No. _____

Contract No.: _____

Name and Location of Project: _____

WEATHER: (Clear) (P. Cloudy) (Cloudy) Temperature: _____

Rainfall _____ Inches Min., _____ Max., _____

Contractor/Subcontractors	Area of Responsibility
a. _____	_____
b. _____	_____
c. _____	_____
d. _____	_____
e. _____	_____
f. _____	_____
g. _____	_____

1. WORK PERFORMED TODAY: (Indicate location and description of work performed. Refer to work performed by prime and/or subcontractors by letter in Table above.)

_____

2. PREPARATORY INSPECTION FOR NEXT ITEM OF WORK: (Materials/shop drawings approved, required control testing arranged, all preliminary work has been accomplished as per plans and specifications.)

3. INITIAL INSPECTION: (Address quality of workmanship, assure control testing and materials being used in all work are in compliance with plans and specifications).

---

4. FOLLOW-UP INSPECTIONS: (Assure control testing performed as required and all work performed continues to be in compliance with plans and specifications).

---

5. VERBAL INSTRUCTIONS RECEIVED: (List any instructions given by Government personnel on construction deficiencies, retesting required, etc., with action to be taken.)

---

6. REMARKS: (Cover any conflicts in plans, specifications, or instructions or any delay to the job attributable to weather conditions.)

7. RESULTS OF SAFETY INSPECTION: (Note safety violations and corrective action taken. Indicate phase of work where violations occurred.)

---

8. UPCOMING WORK: (Indicate next major phase of work anticipated and approximate date of Preparatory Inspection meeting to cover this work.)

EQUIPMENT DATA: (Indicate items of construction equipment, other than hand tools, at the job site and whether or not used.)

CONTRACTOR'S VERIFICATION: The above report is complete and correct and all material and equipment used and work performed during this reporting period area in compliance with the contract plans and specifications except as noted above.

_____
Contractor's Approved/Authorized Representative

(Sample of Typical Form)

PREPARATORY INSPECTION OUTLINE
(PART-I)

Contract No.: _____ Date: _____

Title and No. of Technical Section: _____

_____

Reference Contract Drawings: _____

A. PLANNED ATTENDANTS:

	NAME	POSITION	COMPANY
1.			
2.			
3.			
4.			

B. SUBMITTALS REQUIRED TO BEGIN WORK:

	ITEM	SUBMITTAL NO.	ACTION CODE
a.			
b.			
c.			
d.			

I HEREBY DECLARE THAT THE ABOVE REQUIRED MATERIALS DELIVERED TO THE JOBSITE ARE CERTIFIED TO BE THE SAME AS THOSE SUBMITTED AND APPROVED.

_____
QUALITY CONTROL REPRESENTATIVE

C. EQUIPMENT TO BE USED IN EXECUTING WORK:

a. _____
b. _____
c. _____

D. WORK AREAS EXAMINED TO ASCERTAIN THAT ALL PRELIMINARY WORK HAS BEEN COMPLETED:

_____
_____

E. METHODS AND PROCEDURES FOR PERFORMING QUALITY CONTROL - INCLUDING SPECIFIC TESTING REQUIREMENTS:

_____
_____

F. COMPLIANCE WITH AND UPGRADING OF THE SAFETY PLAN AND ACTIVITY HAZARD ANALYSIS INCLUDING REVIEW OF THE ACTIVITY ANALYSIS WITH EACH WORKER:

_____
_____

THE ABOVE METHODS AND PROCEDURES OUTLINED ARE CERTIFIED TO COMPLY WITH THE CONTRACT REQUIREMENTS AND WILL BE PERFORMED AS PLANNED AND SPECIFIED.

_____
QUALITY CONTROL REPRESENTATIVE

(Sample of Typical Form)

PREPARATORY INSPECTION OUTLINE
(PART - II)

A. PERSONS IN ATTENDANCE:

	NAME	POSITION	COMPANY
1.			
2.			
3.			
4.			
5.			
6.			

B. ITEMS OF MUTUAL UNDERSTANDING DEVELOPED DURING REVIEW OF PREPARATORY OUTLINE AND CONTRACT REQUIREMENTS: (Contract items not specifically covered during the preparatory inspection conference are assumed to be in strict conformance with the contract requirements.)

1. _____

2. _____

3. _____

4. _____

5. _____

6. _____

7. _____

8. _____

THE ITEMS NOTED ABOVE CONSTITUTE A MEMORANDUM OF MUTUAL UNDERSTANDING AND WILL BE PERFORMED AS PLANNED AND SPECIFIED.

_____
CONTRACTOR'S APPROVED/AUTHORIZED REPRESENTATIVE

(Sample of Typical Form)

INITIAL PHASE CHECK LIST

Contract No.: _____ Date: _____

Specification Paragraph or Section: _____

Description and Location of Work Inspected: _____

_____

REFERENCE CONTRACT DRAWINGS: _____

A. PERSONNEL PRESENT:

	NAME	POSITION	COMPANY
1.			
2.			
3.			
4.			

B. MATERIALS BEING USED ARE IN STRICT COMPLIANCE WITH THE CONTRACT PLANS AND SPECIFICATIONS: YES_____ NO_____

IF NOT, EXPLAIN: _____

_____

_____

C. PROCEDURES AND/OR WORK METHODS WITNESSED ARE IN STRICT COMPLIANCE WITH THE CONTRACT SPECIFICATIONS: YES_____ NO_____

IF NOT, EXPLAIN: _____

_____

_____

D. WORKMANSHIP IS ACCEPTABLE: YES_____ NO_____

STATE AREAS WHERE IMPROVEMENT IS NEEDED: _____

_____

_____

E. SAFETY VIOLATIONS NOTED: YES_____ NO_____

IF YES, CORRECTIVE ACTION TAKEN: _____

_____

_____

_____
QUALITY CONTROL REPRESENTATIVE

INDEX

SECTION 01500

TEMPORARY CONSTRUCTION FACILITIES

PARAGRAPH		PAGE
PART 1	GENERAL	1
1.1	APPLICABLE PUBLICATIONS	1
1.2	GENERAL REQUIREMENTS	2
1.3	AVAILABILITY AND USE OF UTILITY SERVICES	2
1.4	BULLETIN BOARD, PROJECT SIGN, AND PROJECT SAFETY SIGN	3
1.5	SCRAP MATERIAL	4
1.6	WRITTEN GUARANTEES AND GUARANTOR'S LOCAL REPRESENTATIVE	4
1.7	PRICING OF CONTRACTOR-FURNISHED AND INSTALLED PROPERTY AND GOVERNMENT-FURNISHED CONTRACTOR-INSTALLED PROPERTY	4
1.8	TEMPORARY ELECTRIC WIRING	4
1.9	UTILITIES NOT SHOWN	5
1.10	GENERAL SAFETY REQUIREMENTS	5
1.11	PLANNED UTILITY OUTAGES AND STREET CLOSURES	8
1.12	PROTECTION AND MAINTENANCE OF TRAFFIC	8
1.13	PERMITS	9
1.14	TIME EXTENSIONS FOR UNUSUALLY SEVERE WEATHER	10
1.15	CONTRACTOR'S TEMPORARY FACILITIES	10
1.16	HOUSEKEEPING AND CLEANUP	12
1.17	RESTORATION OF STORAGE AREA	12
1.18	EQUIPMENT OWNERSHIP AND OPERATING EXPENSE SCHEDULE	12
1.19	SPECIAL CONSTRUCTION/SECURITY PROCEDURES	13
1.20	MANDATORY WORK STOPPAGES	15
1.21	RADIOACTIVE MATERIAL CONTRACT STATEMENT	15
1.22	DISPOSAL OF REMOVED MATERIALS	18
PART 2	PRODUCTS (NOT APPLICABLE)	18
PART 3	EXECUTION (NOT APPLICABLE)	18

SECTION 01500

TEMPORARY CONSTRUCTION FACILITIES

PART 1 GENERAL

1.1 APPLICABLE PUBLICATIONS:

The publications listed below form a part of this specification to the extent referenced. The publications are referred to in the text by the basic designation only.

DEPARTMENT OF COMMERCE (DOC)

DOC PS 1	(1983) Construction and Industrial Plywood
DOC PS 20	(1970) American Softwood Lumber Standard.

FEDERAL SPECIFICATIONS (FS)

FS TT-P-001984	(Basic) Primer Coating, Latex Base, Exterior, (Undercoat for Wood), White and Tints

AMERICAN NATIONAL STANDARDS INSTITUTE (ANSI)

ANSI Z535.1	(1991) Safety Color Code

AMERICAN SOCIETY FOR TESTING AND MATERIALS (ASTM)

ASTM F 547	(1977; R 1990) Definitions of Terms Relating to Nails for Use with Wood and Wood-Base Materials

U.S. ARMY CORPS OF ENGINEERS

EM 385-1-1	Safety and Health Requirements Manual (1 October 1992).

WEST COAST LUMBER INSPECTION BUREAU (WCLIB)

WCLIB 16	(1970; Rev 1983) Standard Grading and Dressing Rules for Douglas Fir, Western Hemlock, Western Red Cedar, White Fir, Sitka Spruce Lumber

WESTERN WOOD PRODUCTS ASSOCIATION (WWPA)

WWPA-01	(1991; Supple No. 1) Western Lumber Grading Rules 91

1.2 GENERAL REQUIREMENTS

1.2.1 Site Plan

The Contractor shall prepare a site plan indicating the proposed location and dimensions of any area to be fenced and used by the Contractor, the number of

trailers to be used, avenues of ingress/egress to the fenced area and details of the fence installation. Any areas which may have to be graveled to prevent the tracking of mud shall also be identified. The Contractor shall also indicate if the use of a supplemental or other staging area is desired.

1.2.2 Identification of Employees

The Contractor shall be responsible for furnishing to each employee and for requiring each employee engaged on the work to display identification as approved and directed by the Contracting Officer. Prescribed identification shall immediately be delivered to the Contracting Officer for cancellation upon release of any employee. When required, the Contractor shall obtain and provide fingerprints of persons employed on the project. Contractor and subcontractor personnel shall wear identifying markings on hard hats clearly identifying the company for whom the employee works.

1.2.3 Employee Parking

Contractor employees shall park privately owned vehicles in an area designated by the Contracting Officer. This area will be within reasonable walking distance of the construction site. Contractor employee parking shall not interfere with existing and established parking requirements of the military installation.

1.3 AVAILABILITY AND USE OF UTILITY SERVICES

1.3.1 Payment for Utility Services

The Government will make all reasonably required utilities available to the Contractor from existing outlets and supplies, as specified in the contract. The Contractor shall carefully conserve any utilities furnished without charge. The Contractor’s attention is directed to Section 00800, Paragraph AVAILABILITY OF UTILITY SERVICES.

1.3.2 Sanitation

The Contractor shall provide and maintain within the construction area minimum field-type sanitary facilities approved by the Contracting Officer. Government toilet facilities will not be available to Contractor’s personnel.

1.3.3 Telephone

The Contractor shall make arrangements and pay all costs for telephone facilities desired.

1.4 BULLETIN BOARD, PROJECT SIGN, AND PROJECT SAFETY SIGN

1.4.1 Bulletin Board

Immediately upon beginning of work, the Contractor shall provide a weatherproof glass-covered bulletin board not less than 915 by 1220 mm (36 by 48 inches) in size for displaying the Equal Employment Opportunity poster, a copy of the wage decision contained in the contract, Wage Rate Information poster, and other information approved by the Contracting Officer. The bulletin board shall be located at the project site in a conspicuous place easily accessible to all employees, as approved by the Contracting Officer. Legible copies of the aforementioned data shall be displayed until work is completed. Upon completion

of work the bulletin board shall be removed by and remain the property of the Contractor.

1.4.2 Project and Safety Signs

(A) General:

The Contractor shall construct and erect one project sign, one safety sign and a minimum of 1 hard hat signs at locations designated by the Contracting Officer. The signs shall conform to the requirements of the drawings attached at the end of this section. The signs shall be erected as soon as possible and within 15 days after date of commencement of work under this contract. The data required by the safety sign shall be corrected daily.

(B) Materials:

(1) Lumber shall conform to DOC PS 20 and grading rules of applicable grading agencies, WCLIB or WWPA. Grade shall be "Standard" or better Douglas Fir, S4S and shall be stamped S-Dry.

(2) Plywood: Plywood shall conform to DOC PS 1, Grade AC, Group 1, Exterior.

(3) Bolts, Nuts and Nails: Bolts and nuts shall be galvanized, and type, and size best suited for intended for use. Nails shall conform to ASTM F 547.

(4) Paint: Type of paint for primer, finish coats, lettering, and color of signs and lettering shall be as directed by the Contracting Officer. Safety signs shall be painted in the same colors as the project sign. Hard hat signs shall be painted as indicated on the attached drawing.

(5) Decals: Corps of Engineers castle decal and the hard hat decal called for on the signs will be furnished by the Government.

(C) Construction:

(1) Signs shall be constructed as detailed on attached drawings.

(2) Painting: All exposed surfaces and edges of plywood shall be given one coat of linseed oil and be wiped prior to applying primer. All exposed surfaces of signs and supports shall be given one coat of primer and one finish coat of paint colors as directed. All lettering shall be sized as indicated. Width of letter stroke shall be 1/6 of the letter height, except as noted.

(D) Maintenance and Disposal:

The Contractor shall maintain the signs in good condition throughout the life of the project. Signs shall remain the property of the Contractor and upon completion of the project they shall be removed from the site.

1.5 SCRAP MATERIAL:

Materials specified to be removed and become the property of the Contractor are designated as scrap, and the Contractor, by signing this contract, hereby acknowledges that he has made due allowance for value, if any, of such scrap in the contract price.

1.6 WRITTEN GUARANTEES AND GUARANTOR'S LOCAL REPRESENTATIVE:

Prior to completion of the contract, the Contractor shall obtain and furnish to the Contracting Officer's representative written guarantees for all the equipment and/or appliances furnished under the contract. The Contractor shall furnish with each guarantee: The name, address, and telephone number of the guarantor's representative nearest to the location where the equipment and/or appliances are installed, who, upon request of the Using Service's representative, will honor the guarantee during the guaranty period and will provide the services prescribed by the terms of the guarantee.

1.7 PRICING OF CONTRACTOR-FURNISHED AND INSTALLED PROPERTY AND GOVERNMENT-FURNISHED CONTRACTOR-INSTALLED PROPERTY:

The Contractor shall promptly furnish and shall cause any sub-contractor or supplier to furnish, in like manner, unit prices and descriptive data required by the Government for Property Record purposes of fixtures and equipment furnished and/or installed by the Contractor or sub-contractor, except prices do not need to be provided for Government-Furnished Property. This information shall be listed on RMS CQC Module furnished by the Government. See example forms at the end of this section.

1.8 TEMPORARY ELECTRIC WIRING:

(A) Temporary Power and Lighting:

The Contractor shall provide construction power facilities in accordance with the safety requirements of the National Electrical Code NFPA No. 70 and the SAFETY AND HEALTH REQUIREMENTS MANUAL EM 385-1-1. The Contractor, or his delegated subcontractor, shall enforce all the safety requirements of electrical extensions for the work of all subcontractors. All work shall be accomplished by skilled electrical tradesmen in a workmanlike manner, as approved by the Contracting Officer.

(B) Construction Equipment:

In addition to the requirements of EM 385-1-1, SAFETY AND HEALTH REQUIREMENTS MANUAL, all temporary wiring conductors installed for operation of construction tools and equipment shall be either Type TW or THW contained in metal raceways, or may be multiconductor cord. Temporary wiring shall be secured above the ground or floor in a workmanlike manner and shall not present an obstacle to persons or equipment. Open wiring may only be used outside of buildings, and then only in strict accordance with the provisions of the National Electrical Code.

(C) Circuit Protection:

In addition to the present requirements in EM 385-1-1 and the National Electrical Code, all 15 and 20-ampere receptacle outlets used for obtaining power during construction shall have ground fault circuit interrupters (GFCI) for personnel protection. Block and brick saws shall also be equipped with GFCI. The Contracting Officer may allow an exception to this requirement for circuits for concrete vibrators or circuits operating at other than 60 Hertz normal (in both cases an assured grounding program as described in the National Electrical Code, except utilizing the daily inspection frequency of the grounding means of such equipment, may be permitted). The assured grounding program will not be permitted as a substitute for usage of GFCI'S except as described above. All generator-powered 15- and 20-ampere, 60 Hertz receptacle

outlets shall have GFCI'S, and shall be properly grounded. A testing means shall be provided which will impose a measured fault of 5 milliamperes, plus or minus 1 milliamperes, and result in tripping the GFCI unit.

1.9 UTILITIES NOT SHOWN:

If the Contractor encounters, within the construction limits of the entire project, utilities not shown on the plans and not visible as to the date of this contract and such utilities will interfere with construction operations, he shall immediately notify the Contracting Officer in writing to enable a determination by the Contracting Officer as to the necessity for removal or relocation. If such utilities are removed or relocated as directed by the Contracting Officer, the Contractor shall be entitled to equitable adjustment for any additional pertinent work or delay.

1.10 GENERAL SAFETY REQUIREMENTS:

(A) General:

The Corps of Engineers Safety and Health Requirements Manual, EM 385-1-1, (see Contract Clauses, Section 00700, ACCIDENT PREVENTION) and the Occupational Safety and Health Act (OSHA) Standards for Construction (Title 29, Code of Federal Regulations Part 1926 as revised from time to time); General Industry Standards (Title 29, Code of Federal Regulations Part 1910 as revised from time to time); and the National Fire Protection Association Codes are applicable to this contract. In case of conflict the most stringent requirement of the standards is applicable.

(B) The Prime Contractor's superintendent

The Prime Contractor's superintendent shall take an active role in enforcing the safety requirements by participation in safety conferences, hazard analysis (see below), tool box meetings, walk-through inspections, correction of violations, etc., and including that of the subcontractor's work.

(C) Job Hazard Analysis:

Based on the construction schedule, the Contractor shall submit a job hazard analysis of each major phase of work prior to entering that phase of activity. The analysis shall include major or high risk hazards, as well as commonly recurring deficiencies that might possibly be encountered for that operation, and shall identify proposed methods and techniques of accomplishing each phase in a safe manner. The Prime Contractor's superintendent shall take active participation in the Job Hazard Analysis, including the subcontractors' work. Prior to start of actual work a meeting shall be held with Prime Contractor, Government, and affected subcontractor to review the Job Hazard Analysis. In addition, job site meetings shall be held to indoctrinate foreman and workers on details of this analysis.

(D) Violations:

If recurring violations and/or gross violation indicate that the safety performance is unsatisfactory, corrective action shall be taken as directed, and at the discretion of the Contracting Officer the retention or some part thereof will be withheld from the progress payment until corrective action has been completed.

(E) Elevated Work Areas:

Workers in elevated work areas in excess of 6 feet above an adjoining surface require special safety attention. In addition to the provisions of EM 385-1-1, the following safety measures are required to be submitted to the Contracting Officer's Representative. Prior to commencement of work in elevated work areas, the Contractor shall submit drawings depicting all provisions of his positive protection system including, but not limited to, all details of guard rails.

(1) Positive protection for workmen engaged in the installation of structural steel and steel joists shall be provided by safety nets, tie-off's, hydraulic man lifts, scaffolds, or other required means. Decking crews must be tied-off or work over nets or platforms not over 6 feet below the work area. Walking on beams and/or girders and the climbing of columns is prohibited without positive protection.

(2) Perimeter guard rails shall be installed at floor, roof, or wall openings more than 6 feet above an adjoining surface and on roof perimeters. Rails shall be designed to protect all phases of elevated work including, but not limited to, roofing operations and installation of gutters and flashing. Rails around roofs may not be removed until all work on the roof is complete and all traffic on or across the roof ceases. Rails shall be designed by a licensed engineer to provide adequate stability under any anticipated impact loading. As a minimum, the rails shall consist of a top rail at a height of 42 inches, a mid rail and a toe board. Use of tie-offs, hydraulic man lifts, scaffolds, or other means of roof edge protection methods may be utilized on small structures such as family housing, prefabricated metal buildings, etc.

(F) Fire Prevention:

Twenty-four hours notice shall be given to the Contracting Officer for coordination with the Facility Fire Department prior to conducting any fire hazardous operation. Cutting or welding will be permitted only in areas that are or have been made fire safe. Where possible, all combustibles shall be located at least 35 feet horizontally from the work site. Where such location is impracticable, combustibles shall be protected with fire blankets and/or protective welding screens to prevent slag from running out of the work area. Edges of covers at the floor shall be tight to prevent sparks from going under them. This precaution is also important at overlaps where several covers are used to protect a large pile. The Contractor shall not allow any welding/cutting or open flame operations in facilities that are protected by a wet pipe fire sprinkler or an automatic detection system, if the system is out of service. First priority of work will be to return the suppression/detection system to operational condition. Return the fire detection and/or suppression system back to an operational status (if possible) during periods that the facility is unoccupied, and at the end of the work day. The Contractor shall post a fire guard for a 24 hour period (or certify to the Fire Department that the facility is safe) after welding, cutting, and open flame operations in a facility when: (a) fire detection and suppression system can not be returned to service; (b) fire detection or suppression systems do not exist. Other fire prevention precautions shall be in accordance with the latest National Fire Codes.

(1) The Contractor shall obtain certification by calling the Base Fire Department Dispatch Center at ext. 6-5380 or 6-5971. Please give the following information:

Facility Number _____

Hot Work Permit Number _____
Name of Person Calling _____
Name of Contractor _____

(2) Contractor shall observe all safety and fire regulations as presently enforced at Vandenberg AFB. The construction shall be in accordance with the Corps of Engineers' Manual, General Safety Requirements EM 385-1-1, and Occupational Safety and Health Act (OSHA) Public Law 91-596. Comply with OSHA and Air Force Occupational Safety and Health (AFOSH) safety standards.

(3) All construction sites are subject to fire and safety inspections without notice. Any violation of fire and safety standards may result in a work stoppage at the expense of the Contractor.

(G) Recordkeeping/Reporting Requirements:

On all contract operations, the Prime Contractor shall be responsible for recording and reporting all accident exposure and experience incident work. (This includes exposure and experience of the prime contractor and his/her sub-contractor(s)). As a minimum these records shall include exposure work-hours and a log of occupational injuries and illnesses. (OSHA Form 200 or state equivalent as prescribed by 29 CFR 1904.5) Reference EM 385-1-1, 02.A.02.

(H) Accident Reporting:

In addition to the requirements for reporting accidents in accordance with EM 385-1-1, Section 1, the Prime Contractor will submit at the 50% point and 100% of project completion, a written summary of worker's compensation claims filed by workers on the project. The report will include all subcontractors. The main report covering the Prime Contractor claims will be certified as "correct and true" by the Contractor's compensation insurance carrier. The same certification will be required for subcontractor reports.

1.11 PLANNED UTILITY OUTAGES AND STREET CLOSURES:

All utility outages and street closures shall be of as short a duration as possible and shall be scheduled as far in advance as possible with the Contracting Officer, in no case less than 5 days before the outage or closure. The Contractor shall obtain in writing from the Contracting Officer a statement or schedule giving the permissible times of outages or closures for particular installations and the maximum time allowed for each. The Contractor shall strictly observe such schedules and will be held responsible for any violations.

1.12 PROTECTION AND MAINTENANCE OF TRAFFIC

During construction the Contractor shall provide access and temporary relocated roads as necessary to maintain traffic. The Contractor shall maintain and protect traffic on all affected roads during the construction period except as otherwise specifically directed by the Contracting Officer. Measures for the protection and diversion of traffic, including the provision of watchmen and flagmen, erection of barricades, placing of lights around and in front of equipment and the work, and the erection and maintenance of adequate warning, danger, and direction signs, shall be as required by the State and local authorities having jurisdiction. The traveling public shall be protected from damage to person and property. The Contractor's traffic on roads selected for hauling material to and from the site shall interfere as little as possible with public traffic. The Contractor shall investigate the adequacy of existing roads and the allowable load limit on these roads. The Contractor shall be

responsible for the repair of any damage to roads caused by construction operations.

1.12.1 Haul Roads

The Contractor shall, at its own expense, construct access and haul roads necessary for proper prosecution of the work under this contract. Haul roads shall be constructed with suitable grades and widths; sharp curves, blind corners, and dangerous cross traffic shall be avoided. The Contractor shall provide necessary lighting, signs, barricades, and distinctive markings for the safe movement of traffic. The method of dust control, although optional, shall be adequate to ensure safe operation at all times. Location, grade, width, and alignment of construction and hauling roads shall be subject to approval by the Contracting Officer. Lighting shall be adequate to assure full and clear visibility for full width of haul road and work areas during any night work operations. Upon completion of the work, haul roads designated by the Contracting Officer shall be removed.

1.12.2 Barricades

The Contractor shall erect and maintain temporary barricades to limit public access to hazardous areas. Such barricades shall be required whenever safe public access to paved areas such as roads, parking areas or sidewalks is prevented by construction activities or as otherwise necessary to ensure the safety of both pedestrian and vehicular traffic. Barricades shall be securely placed, clearly visible with adequate illumination to provide sufficient visual warning of the hazard during both day and night.

1.13 PERMITS:

(A) Excavation Permit:

(1) The Contractor shall obtain and process an AF Form 103, Civil Engineering Work Clearance Request, from the Contracts Management Section, Building 11433, 6-8093. The Contractor shall provide sketches showing the location, size, and depth of any excavation and trenching. The Contractor shall list proposed utility, fire, or security system outages. The AF Form 103 shall be processed through the appropriate government agencies for review and coordination. Government agencies will annotate the form with special instructions or requirements. The AF Form 103 with sketches, all in triplicate, shall be submitted a minimum of 5 work days prior to the proposed construction start date. Work shall not begin until the AF Form 103 is fully approved.

(2) When any digging is performed in the vicinity of utilities or communication cables, Civil Engineering Group (30 CEG) and/or Communications Squadron (30 CS) monitors, as required, will be present. No mechanical digging shall be performed within 4 feet of utilities or communication cables until they are physically exposed by hand digging. If a utility or communication cable is damaged, notify the Contracting Officer immediately. Twenty-four hours advance notice for CE monitors, 6-8093, and CS monitors, 6-4400, is required. Work shall not begin until the monitors are present.

(3) Seventy-two hours advance notice for environmental monitors, 6-1922, is required. Work shall not begin until the monitors are present.

(B) Welding Permit:

Welding or torching of any kind on Vandenberg AFB requires a welding permit. The Contractor shall obtain a welding permit from the Fire Protection Flight, Building 10660, 6-5380. A permit will be issued within 2 work days with instructions for welding fire prevention.

1.14 TIME EXTENSIONS FOR UNUSUALLY SEVERE WEATHER:

(A) This provision specifies the procedure for the determination of time extensions for unusually severe weather in accordance with the CONTRACT CLAUSE, Section 00700, entitled "DEFAULT (FIXED-PRICE CONSTRUCTION)". In order for the Contracting Officer to award a time extension under this clause, the following conditions must be satisfied:

(1) The weather experienced at the project site during the contract period must be found to be unusually severe, that is, more severe than the adverse weather anticipated for the project location during any given month.

(2) The unusually severe weather must actually cause a delay to the completion of the project. The delay must be beyond the control and without the fault or negligence of the Contractor.

(B) The following schedule of monthly anticipated adverse weather delays is based on National Oceanic and Atmospheric Administration (NOAA) or similar data for the project location and will constitute the base line for monthly weather time evaluations. The Contractor’s progress schedule must reflect these anticipated adverse weather delays in all weather dependent activities.

MONTHLY ANTICIPATED ADVERSE WEATHER DELAY
WORK DAYS BASED ON (5) DAY WORK WEEK

JAN	FEB	MAR	APR	MAY	JUN	JUL	AUG	SEP	OCT	NOV	DEC
(05)	(05)	(05)	(03)	(01)	(00)	(00)	(00)	(01)	(01)	(04)	(05)

(C) Upon acknowledgement of the Notice to Proceed (NTP) and continuing throughout the contract, the Contractor will record on the daily CQC report, the occurrence of adverse weather and resultant impact to normally scheduled work. Actual adverse weather delay days must prevent work on critical activities for 50 percent or more of the Contractor’s scheduled work day.
(ER 415-1-15, 31 OCT 89)

1.15 CONTRACTOR’S TEMPORARY FACILITIES

1.15.1 Administrative Field Offices

The Contractor shall provide and maintain administrative field office facilities within the construction area at the designated site. Government office and warehouse facilities will not be available to the Contractor’s personnel.

1.15.2 Storage Area

The Contractor shall construct a temporary 1.8 meter (6 foot) high chain link fence around trailers and materials. The fence shall include plastic strip inserts, colored **brown,** so that visibility through the fence is obstructed. Fence posts may be driven, in lieu of concrete bases, where soil conditions permit. Trailers, materials, or equipment shall not be placed or stored outside the fenced area unless such trailers, materials, or equipment are assigned a

separate and distinct storage area by the Contracting Officer away from the vicinity of the construction site **but within the military boundaries.** Trailers, equipment, or materials shall not be open to public view with the exception of those items which are in support of ongoing work on any given day. Materials shall not be stockpiled outside the fence in preparation for the next day's work. At the end of each work day mobile equipment, such as tractors, wheeled lifting equipment, cranes, trucks, and like equipment, shall be parked within the fenced area.

1.15.3 Supplemental Storage Area

Upon Contractor's request, the Contracting Officer will designate another or supplemental area for the Contractor's use and storage of trailers, equipment, and materials. This area may not be in close proximity of the construction site but shall be within the military boundaries. Fencing of materials or equipment will not be required at this site; however, the Contractor shall be responsible for cleanliness and orderliness of the area used and for the security of any material or equipment stored in this area. Utilities will not be provided to this area by the Government.

1.15.4 Appearance of Trailers

Trailers utilized by the Contractor for administrative or material storage purposes shall present a clean and neat exterior appearance and shall be in a state of good repair. Trailers which, in the opinion of the Contracting Officer, require exterior painting or maintenance will not be allowed on **the military property.**

1.15.5 Maintenance of Storage Area

Fencing shall be kept in a state of good repair and proper alignment. Should the Contractor elect to traverse with construction equipment or other vehicles grassed or unpaved areas which are not established roadways, such areas shall be covered with a layer of gravel as necessary to prevent rutting and the tracking of mud onto paved or established roadways; gravel gradation shall be at the Contractor's discretion. Grass located within the boundaries of the construction site shall be mowed for the duration of the project. Grass and vegetation along fences, buildings, under trailers, and in areas not accessible to mowers shall be edged or trimmed neatly.

1.15.6 Security Provisions

Adequate outside security lighting shall be provided at the Contractor's temporary facilities. The Contractor shall be responsible for the security of its own equipment; in addition, the Contractor shall notify the appropriate law enforcement agency requesting periodic security checks of the temporary project field office.

1.16 HOUSEKEEPING AND CLEANUP:

Pursuant to the requirements of paragraph, CLEANING UP and paragraph, ACCIDENT PREVENTION, of the CONTRACT CLAUSES, Section 00700, the Contractor shall assign sufficient personnel to insure strict compliance. The Contractor shall submit a detailed written plan for implementation of this requirement. The plan will be presented as part of the preconstruction safety plan and will provide for keeping the total construction site, structures and accessways free of debris and obstructions at all times. Work will not be allowed in those areas that, in the opinion of the Contracting Officer's representative, have

unsatisfactory cleanup and housekeeping at the end of the preceding day's normal work shift. At least once each day all areas shall be checked by the Quality Control person of the Prime Contractor and the findings recorded on the Quality Control Daily Report. In addition, the Quality Control person will take immediate action to insure compliance with this requirement. Housekeeping and cleanup shall be assigned by the Contractor to specific personnel. The name(s) of the personnel shall be available at the project site; each person will be supplied with a distinctively marked hard hat, to be worn from the beginning to the end of the project.

1.17 RESTORATION OF STORAGE AREA

Upon completion of the project and after removal of trailers, materials, and equipment from within the fenced area, the fence shall be removed and will become the property of the Contractor. Areas used by the Contractor for the storage of equipment or material, or other use, shall be restored to the original or better condition. Gravel used to traverse grassed areas shall be removed and the area restored to its original condition, including top soil and seeding as necessary.

1.18 EQUIPMENT OWNERSHIP AND OPERATING EXPENSE SCHEDULE

(A) Allowable cost for construction and marine plant and equipment in sound workable condition owned or controlled and furnished by a Contractor or subcontractor at any tier shall be based on actual cost data when the Government can determine both ownership and operating costs for each piece of equipment or equipment groups of similar serial and series from the Contractor's accounting records. When both ownership and operating costs cannot be determined from the Contractor's accounting records, equipment costs shall be based upon the applicable provisions of EP 1110-1-8, "Construction Equipment Ownership and Operating Expense Schedule", Region VII. Working conditions shall be considered to be average for determining equipment rates using the schedule unless specified otherwise by the Contracting Officer. For equipment not included in the schedule, rates for comparable pieces of equipment may be used or a rate may be developed using the formula provided in the schedule. For forward pricing, the schedule in effect at the time of negotiations shall apply. For retrospective pricing, the schedule in effect at the time the work was performed shall apply.

(B) Equipment rental costs are allowable, subject to the provisions of FAR 31.105(d)(ii) and FAR 31.205-36 substantiated by certified copies of paid invoices. Rates for equipment rented from an organization under common control, lease-purchase or sale-leaseback arrangements will be determined using the schedule except that rental costs leased from an organization under common control that has an established practice of leasing the same or similar equipment to unaffiliated leasees are allowable. Costs for major repairs or overhaul are unallowable.

(C) When actual equipment costs are proposed and the total amount of the pricing action is over $25,000, cost or pricing data shall be submitted on Standard Form 1411, "Contract Pricing Proposal Cover Sheet". By submitting cost or pricing data, the Contractor grants to the Contracting Officer or an authorizing representative the right to examine those books, records, documents and other supporting data that will permit evaluation of the proposed equipment costs. After price agreement, the Contractor shall certify that the equipment costs or pricing data submitted are accurate, complete and current.

1.19 SPECIAL CONSTRUCTION/SECURITY PROCEDURES:

(A) Security.

(1) The Contractor shall obtain all passes, badges, decals, or other identification media required for security clearance to areas where work is performed. Obtain vehicle and individual identification media at the Pass and Registration Section, Building 11032, 6-1853. Identification media shall be surrendered to the Pass and Registration Section upon termination of the Contract, or termination of an individual's employment with the Contractor.

(2) The work to be performed is in a military restricted or controlled area. The Contractor must comply with the entry control policies for the area. The Contractor and its employees are required to have at least a SECRET personnel security clearance. In the event the Contractor cannot comply with the investigative or clearance requirement, it is the responsibility of the Contractor to obtain escort officials who are authorized unescorted entry to the work area. It is also the Contractor's responsibility to coordinate with the area Office of Primary Responsibility (OPR) at least 5 work days prior to start of Contract performance. For information on security services, contact 30 SPW/SP, 6-9011. The Contractor shall provide enough escort officials for uninterrupted visual surveillance (within 50 feet) of all individuals not having required security clearance performing work as part of the Contract.

(B) Use or travel of vehicle or heavy equipment on location outside the project limits shown on the drawings is prohibited.

(C) Internal combustion engines:

All internal combustion engines other than engines equipped with turbochargers or pollution control catalytic converters, which are operated in off-road conditions, shall be equipped with U.S. Forest Service approved spark arresters.

(D) Cooperation with Others:

During the life of this contract, other Contractors will be performing operations in the general area where work under this contract is being performed. The Contractor shall cooperate with others in all respects wherever necessary for the better prosecution of the work. As far as practicable, all persons working in the vicinity shall have equal rights to the use of all transportation facilities and grounds within the limitations specified in the CONTRACT CLAUSES. The obligation of the Contractor under this contract shall include jointly planning and scheduling the work, on a cooperative basis, with other Contractors in order to minimize delays and interferences. The Contractor shall so arrange his operations as to not interfere with other work in progress. In case of dispute or disagreement regarding use of transportation and storage facilities and rights of access, the decision of the Contracting Officer shall govern.

(E) Additional Requirements:

(1) Vandenberg AFB is a closed facility. Entrance passes will be issued to the contractor and personnel for use during the construction period. Passes shall be returned at the termination of the contract.

(2) Notice for interruptions of any base utility must be coordinated at least two weeks in advance with the Contracting Officer.

(3) Digging permits, (AF Form 103) issued by the Base Civil Engineer, are required prior to the start of work. Lead time is ten working days.

(4) Dust shall be controlled as the work proceeds, and not allowed to become a hazard or nuisance.

(5) Traffic control shall be the responsibility of the contractor.

(6) All trash and debris created during the excavation and construction operations are to be removed from the base and disposed of by and at the expense of the contractor.

(7) No sanitary sewer dump stations available; therefore, the contractor shall provide portable toilets for personnel.

(8) Contractor may use the base water supply at no cost; however, the contractor shall provide and install all equipment necessary to connect to existing lines and remove all such equipment at project completion.

(9) Contractor may use the base electrical service at no cost; however, the contractor shall provide and install all equipment necessary to connect to existing service and remove all such equipment at project completion.

(10) Borrow material is not available on base. Locally obtained borrow materials shall conform to project specifications and soil report requirements.

(11) Dewatering techniques are the contractor’s perogative; however, approval of dewatering method shall be granted by the Contracting Officer prior to the start of work.

1.20 MANDATORY WORK STOPPAGES

(A) A mandatory work stoppage occurs whenever the Contractor is restricted from working a full workday and is unable to reallocate work forces to other locations. All costs associated with five mandatory work stoppages must be included in the bid price. No additional compensation or extension to the Contract performance period will be given as a result of five mandatory work stoppages.

(1) In the event that the Contractor’s work force is required to evacuate any part of the working area during working hours established by the Contractor for this contract, the Government will then make an adjustment under the clause entitled, FAR 52.212-12 SUSPENSION OF WORK, see Section 00700. The Government’s liability will be considered to be limited to reimbursement for loss of time of Contractor’s employees and equipment which otherwise would have been employed on the job. The completion time for any part of the work will not be extended if the total number of working hours of work stoppage does not exceed 0.8 times the number of calendar days in the period between the date of notice to proceed and the specified completion date. In the event the Contractor is required to evacuate the area in excess of the time specified above, the completion times will be adjusted.

(B) The Contractor may be required, without advance notice, to move work to a different location. The Contractor shall be prepared to increase or decrease his work forces with appropriate trades to perform work in the relocated work areas at no additional cost to the Government.

(C) The Contractor shall notify the Contracting Officer when a mandatory work stoppage occurs for recording purposes. Otherwise, the work stoppage will not be credited to the Contractor.

1.21 RADIOACTIVE MATERIAL CONTRACT STATEMENT

(A) Prior to any operations using radioactive material, operators will ensure the following is given to the Base Radiation Safety Officer (BRSO)(30 AMDS/SGPB;6-7811) for review and approval at least two weeks prior to operations.

(1) A copy of a valid and current USAF Permit, for Air Force users; or a copy of a valid and current Nuclear Regulatory Commission License or Agreement State License with Nuclear Regulatory Commission Form 241, for non-Air Force users.

(2) A copy of a valid and current Radiation Safety Program.

(3) A copy of a valid and current Emergency Response Information.

(4) Operating parameters, including:

a. Radioisotope

b. Activity

c. Time of Operation

d. Date of Operation

e. Location of Operation

f. Contractor/Subcontractor Name

g. Contractor Point of Contact (POC) and phone number; and USAF POC and phone number.

(B) Operators are required to have the following on hand while operating:

(1) A copy of a valid and current USAF Permit, for Air Force users; or a copy of a valid and current Nuclear Regulatory Commission License or Agreement State License with Nuclear Regulatory Commission Form 241, for non-Air Force users.

(2) A copy of a valid and current Radiation Safety Program.

(3) A copy of a valid and current Emergency Response Information.

(4) A copy of Nuclear Regulatory Commission Form 3.

(5) A copy of documents required by 10 CFR 19, *Notices, Instruction and Reports to Workers: Inspection and Investigations,* paragraph 11, *Posting of Notices to Workers.*

(6) A visible 2 mR/hr line must be established prior to operation, to ensure safety of Air Force personnel and assets.

(C) Strict adherence to 10 CFR 19, *Notices, Instruction and Reports to Workers: Inspection and Investigations;* 10 CFR 20, *Standards for Protection Against Radiation;* and 10 CFR 21, *Reporting of Defects and Noncompliance;* and Air Force Instruction 40-201, *Managing Radioactive Material in the USAF,* is required while operating on Vandenberg AFB, CA. The Base Radiation Safety Officer (30 AMDS/SGPB), or his designee, may conduct unannounced on-site visits to ensure established radiation safety practices are being conducted.

(D) Additional requirements exist for operations other than industrial radiography, soil densitometry, etc; for example, irradiators (10 CFR 36) and well-logging (10 CFR 39). Consult BRSO for specific requirements for operators using irradiators or performing well-logging for at least four weeks prior to operation.

NOTE: If Department of Energy sources are used, certification of exemption from Nuclear Regulatory Commission licensing requirements is required prior to operations. When moving Radioactive Material on Vandenberg AFB, CA, contact personnel according to Radioactive Material Tracking Checklist.

Vandenberg AFB, CA Radioactive Material Tracking Checklist

	Prior to Coming on Base	Moves in Base Boundaries	Transfers From One Permittee/ Licensee To another	Launched	Prior to Leaving Base
Permitted AF Radioactive Material, 30 SW	contact B/P/U RSO	contact U RSO	contact B/P/U RSO	contact B/P/U RSO	contact B/P/U RSO
Permitted AF Radioactive Material, other than 30 SW	contact B/P/U RSO	contact U RSO	contact B/P/U RSO	contact B/P/U RSO	contact B/P/U RSO
AF Contractor	contact B/P RSO	contact P RSO	contact B/P RSO		contact B/P RSO
Army/Navy/DoD Component	contact B/P RSO	contact B RSO	contact B/P RSO		contact B/P RSO
NASA	contact B/P RSO	contact P RSO	contact B/P RSO		contact B/P RSO
NASA Contractor	contact B/P RSO	contact P RSO	contact B/P RSO		contact B/P RSO
Department of Energy Licensed Radioactive Material	contact B/P RSO	contact P RSO	contact B/P RSO		contact B/P RSO
Department of	contact	contact	contact	contact	contact

Energy non-Licensed Radioactive Material	B/U RSO	B/U RSO	B/U RSO	B/U RSO	B/U RSO

NOTES:

B RSO = Base Radiation Safety Officer -- 30 AMDS/SGPB, 6-7811
P RSO = Permit Radiation Safety Officer -- Each permit has its own P RSO
U RSO = Unit Radiation Safety Officer -- Each unit has its own U RSO

1.22 DISPOSAL OF REMOVED MATERIALS

(A) The Government inspector will examine all materials removed from the project not indicated for reuse, and will tag or otherwise designate those materials which are serviceable or salvable.

(B) Serviceable or salvageable items, except for locks, latches, and cylinders, shall be turned in, by appointment, to the base Defense Reutilization and Marketing Office (DRMO) or Base Supply by the Contractor. All locks, latches, and cylinders shall be turned in to the Base Lockshop. The Contractor shall schedule DRMO appointments far enough in advance to allow efficient processing of turn-ins. Scrap metal shall be segregated into ferrous and nonferrous metals, and shall be cut, dismantled, palletized, or prepared as required by the DRMO office for acceptance. Dismantling of equipment or material into separate components may be required. The Contractor shall protect materials from damage or theft during the interval between removal and disposal. Any serviceable or salvageable items not accepted by DRMO or Base Supply, for whatever reason, will become the property of the Contractor and will be properly handled, transported, and be disposed of off-base by the Contractor in conformance with all federal, state, and local regulations. See Section 01130 for disposal of hazardous materials.

(C) Unusable items (with no salvage value) shall be transported to the base sanitary landfill by the Contractor as directed by the Contracting Officer. The Contracting Officer’s Representative will inspect all loads of refuse and will issue a landfill access ticket. The purpose of the ticket will be to verify that the refuse was taken from a Vandenberg Air Force Base project. The issuing of the ticket does not relieve the Contractor from the responsibility of properly hauling, handling, and disposing of all refuse. The Contractor shall weigh-in at Building 11505 prior to transporting material to the landfill. Items being transported shall be segregated into dissimilar materials. All items determined to be unacceptable for disposal in the landfill, as determined by the Contracting Officer’s Representative, shall become the property of the Contractor and be disposed of off base at no additional cost to the Government. Vehicles used in transporting refuse shall have a tarpaulin or covering to prevent spillage. The base landfill is subject to daily limits of disposal. In the event the limits are reached, the Contractor shall dispose of refuse off-base at no additional cost to the Government. See Section 01130 for disposal of hazardous materials.

PART 2 PRODUCTS (NOT APPLICABLE)

PART 3 EXECUTION (NOT APPLICABLE)

-- End of Section --

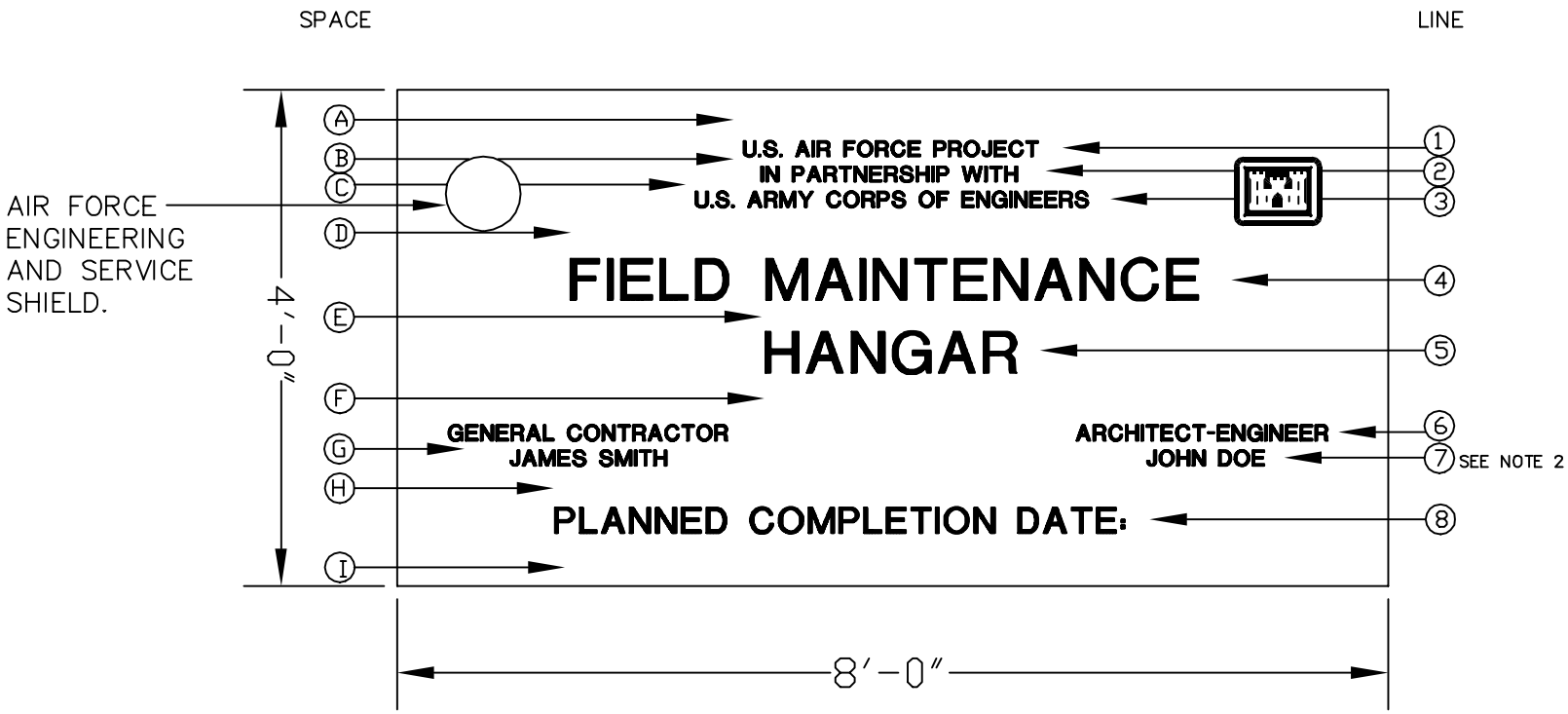

SAMPLE CONSTRUCTION SIGN

NOTES:

1. BACKGROUND AND LETTER COLORS SHELL BE AS SPECIFIED IN SECTION 01500.
2. "CORPS OF ENGINEERS" (FOR SACRAMENTO DISTRICT IN-HOUSE DESIGN PROJECTS ONLY).

SCHEDULE

SPACE	HEIGHT	LINE	DESCRIPTION	LETTER HEIGHT	STROKE
A	5"	1	U.S AIR FORCE PROJECT	1.5"	3/16"
B	1"	2	IN PARTNERSHIP WITH	1.5"	3/16"
C	1"	3	U.S. ARMY CORPS OF ENGINEERS	1.5"	3/16"
D	5"	4	PROJECT NAME	4"	1/2"
E	3"	5	PROJECT NAME (IF REQUIRED)	4"	1/2"
F	5"	6	GENERAL CONTRACTOR/A-E	1.5"	3/16"
G	1"	7	GENERAL CONTRACTOR/A-E	1.5"	3/16"
H	4"	8	PLANNED COMPLETION DATE	2.5"	1/4"
I	5"				

STANDARD DETAIL
PROJECT SIGN
U.S. AIR FORCE
U.S. ARMY ENGINEER DISTRICT
SACRAMENTO

Drawn T. Tufts Not to Scale
Checked R. Simmons AUGUST 1994
File. No. 150-25-1162

ACAD DRAWING: SIGN1162 DWG. 9, AUG. 94

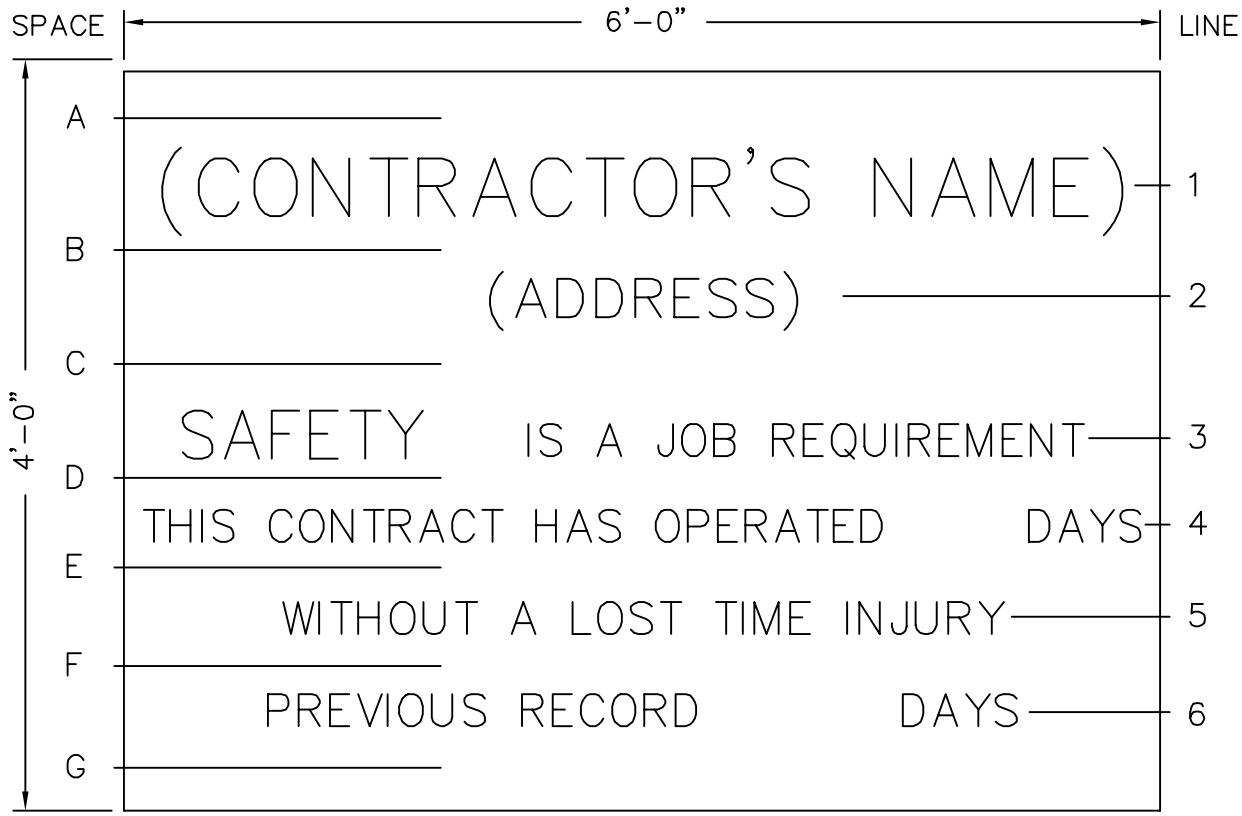

SCHEDULE

SPACE	HEIGHT	LINE	DESCRIPTION	LETTER HEIGHT
A	5"			
		1	CONTRACTOR'S NAME	5"
B	3"			
		2	ADDRESS	3"
C	6"			
		3	SAFETY IS A JOB REQUIREMENT	4 1/2" & 3"
D	3"			
		4	ALL LETTERING	3"
E	3"			
		5	ALL LETTERING	3"
F	3"			
		6	ALL LETTERING	3"
G	5"			

NOTE:

LETTERING SHALL BE BLACK No. 27038, FEDERAL STANDARD 595A.
SIGN SHALL BE INSTALLED IN THE SAME MANNER
AS THE PROJECT SIGN.

STANDARD DETAIL

SAFETY SIGN

U S ARMY ENGINEER DISTRICT
SACRAMENTO

Drawn T. Tufts Not to Scale
Checked R. Simmons AUG. 1988
File number 80-25-707

ACAD DRAWING: SIGN 707 DWG. 9, DEC. 88

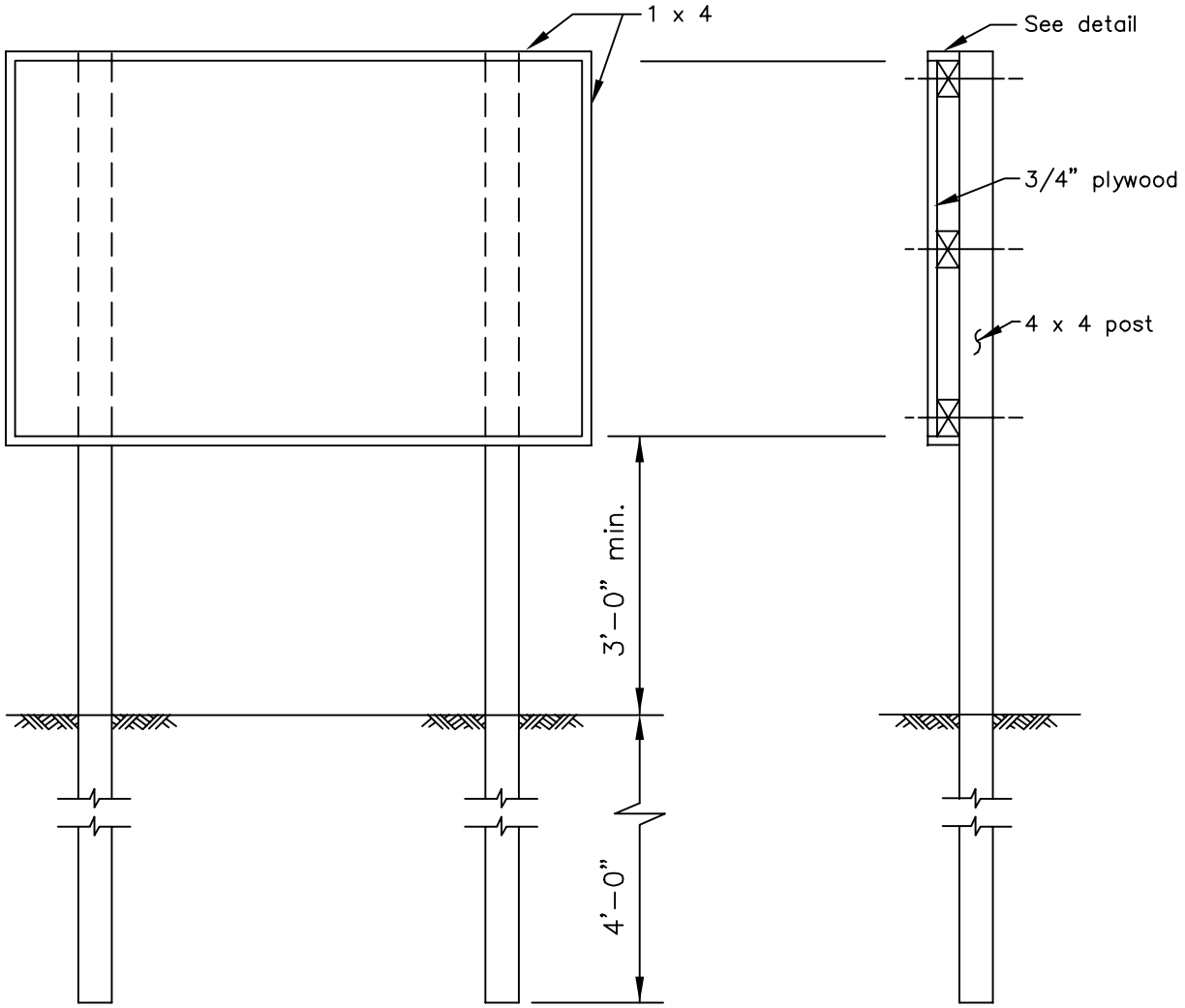

ELEVATION

SECTION

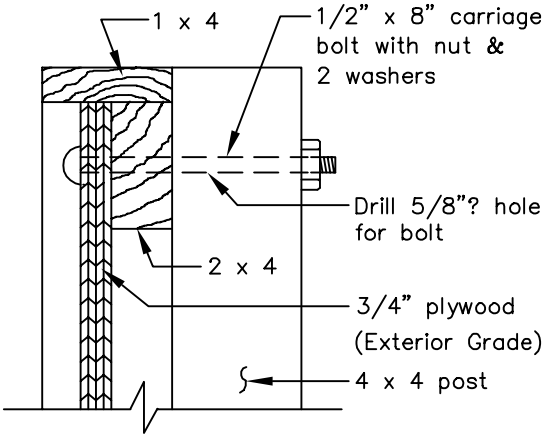

DETAIL

GENERAL NOTES:

1. Lumber to be cut & formed accurately.
2. Secure 1 x 4 and plywood with 6d finish nails at not less than 12" O.C.
3. All exposed nails to be set & holes filled with putty.
4. Sign to be set in good solid ground & backfill carefully tamped into place.
5. Where necessary posts shall be braced to provide a solid installation.
6. Paint primer (Fed. Spec. TT-P-25)
   Paint primer (Fed. Spec. TT-E-529)

STANDARD DETAIL

SIGN DETAILS

U.S. ARMY ENGINEER DISTRICT
SACRAMENTO

Drawn M.Koenig — Not to Scale
Checked R. Simmons — 1987
File No. 150-25-1232

ACAD Drawing SIGN1232.DWG 198

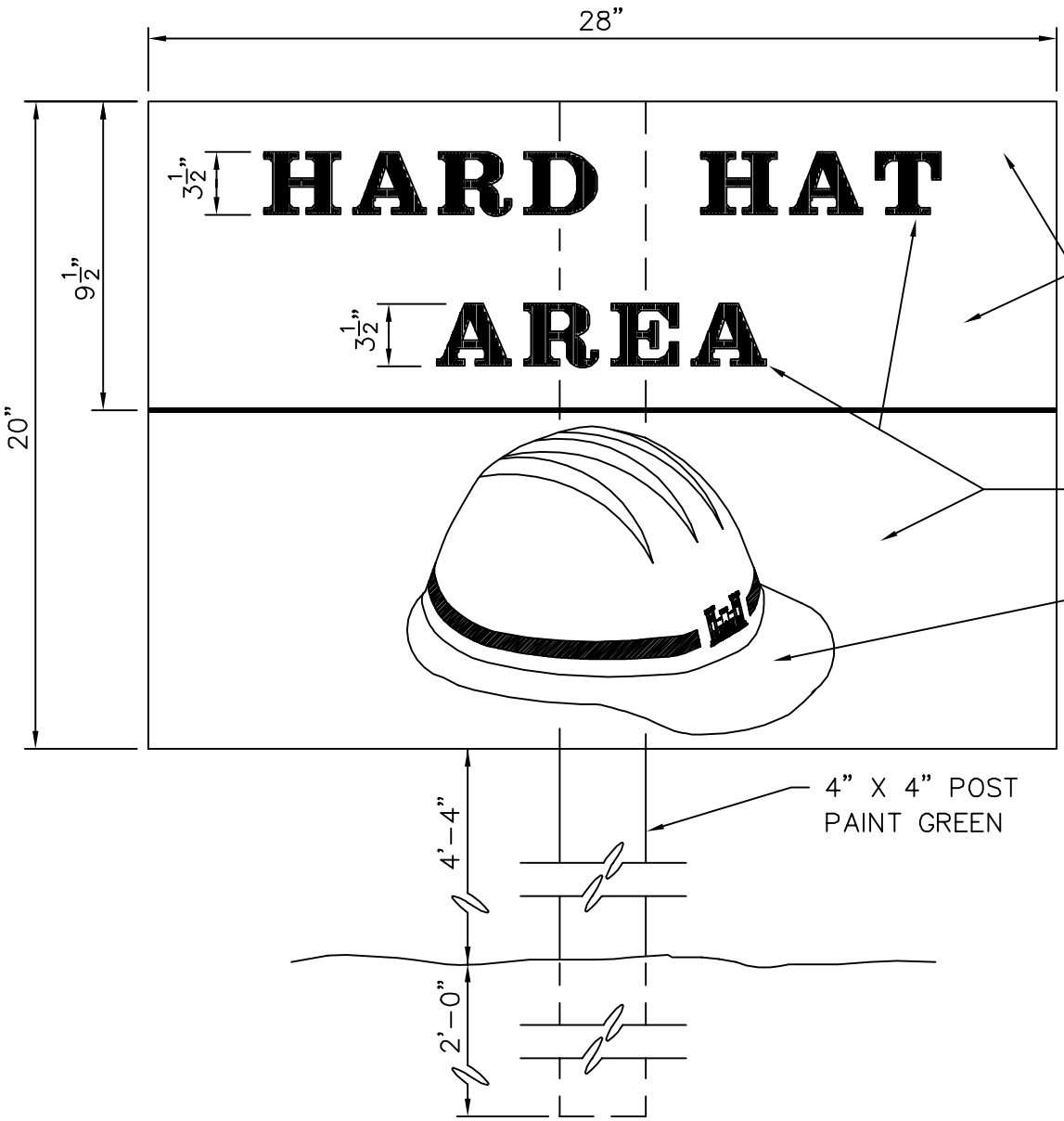

GENERAL NOTES:

1. Green & White Paint shall be opaque glossy as specified in ANSI Z535.1

2. Bolt Sign to post w/$2\frac{1}{2}$" dia. Carriage Bolts.

STANDARD DETAIL

HARD HAT SIGN

U.S. ARMY ENGINEER DISTRICT
SACRAMENTO

Drawn T. Tufts — Not to Scale
Checked R. Simmons — JAN. 1996
File No. 80-25-774

ACAD DRAWING: SIGN774 DWG. 31, JAN. 96

CONTRACTOR EQUIPMENT DATA SHEET *(Data to be furnished by Contractor for all equipment to be used on modifications as required under the special provisions of the contract.)*

DATE

CONTRACTOR

CONTRACT NUMBER

1. EQUIPMENT DESCRIPTION _____

2. MODEL AND SERIES _____

3. YEAR PURCHASED _____

4. PURCHASED PRICE AT YEAR PURCHASE _____

5. LIST PRICE YEAR OF MANUFACTURE _____

6. YEAR MANUFACTURED _____

7. EQUIPMENT HORSEPOWER _____

8. CARRIER HORSEPOWER _____

9. FUEL TYPE _____

10. SHIPPING WEIGHT _____

11. TIRE SIZE: FRONT - _____ DRIVE - _____ TRAILING - _____

REMARKS:

PAY ACTIVITIES

07 Oct 96

CONTRACT NO. - - -

ACTIVITY NUMBER	DESCRIPTION	BID ITEM NUMBER	QUANTITY	FEATURE	SUBCONTRACTOR	PROJECT AREA	CONTRACT PHASE	WORK CATEGORY

(2)(1)(4)(4)

QC TESTING REQUIREMENTS

07 Oct 96

CONTRACT NO. - - -

QC TEST NUMBER	SECTION	PARAGRAPH	REQUIRED FOR ACTIVITY	REQUIRED LAG/LEAD (DAYS)	PERFORM BY	DESCRIPTION

USER SCHOOLING REQUIREMENTS

07 Oct 96

CONTRACT NO. - - -

USER SCHOOL NUMBER	SECTION	PARAGRAPH	REQUIRED FOR ACTIVITY	REQUIRED LAG/LEAD (DAYS)	PERFORM BY	DESCRIPTION

TRANSFER PROPERTY REQUIREMENTS

07 Oct 96

CONTRACT NO. - - -

TRANSFER PROPERTY NUMBER	SECTION	PARAGRAPH	REQUIRED FOR ACTIVITY	REQUIRED LAG/LEAD (DAYS)	FROM TO	TYPE UNIT COST	TOTAL UNITS TRANSFERRED UNITS	DESCRIPTION

INSTALLED PROPERTY REQUIREMENTS

07 Oct 96

CONTRACT NO. - - -

INSTALL PROPERTY NUMBER	SECTION	PARAGRAPH	REQUIRED FOR ACTIVITY	REQUIRED LAG/LEAD (DAYS)	LOCATION	QUANTITY UNIT COST	DESCRIPTION CAPACITY

(2)(1)(4)(6)(5)

SUBMITTAL REQUIREMENTS

07 Oct 96

CONTRACT NO. - - -

SECTION	ITEM NUMBER	PARAGRAPH	SUBMITTAL TYPE	INFO ONLY	GOV'T REVIEW DAYS	SUBMITTAL DESCRIPTION	REFERENCE OR REQUIREMENT	REQUIRED FOR ACTIVITY	MATERIAL PROCUREMENT (DAYS)	MATERIAL LAGLEAD (DAYS)

(2)(1)(4)(5)

QC INFORMATION

07 Oct 96

CONTRACT NO. - - -

DESCRIPTION	DATA

(2)(1)(4)(7)

CONTRACTOR STAFF

07 Oct 96

CONTRACT NO. - - -

	QC STAFF	CATEGORY ASSIGNMENTS
Manager		
Superintendent		

SUBCONTRACTOR INFORMATION

07 Oct 96

CONTRACT NO. - - -

CONTRACTOR	TRADE	FULL NAME & ADDRESS	POINT OF CONTACT	PHONE NUMBER	FAX NUMBER

DEFINABLE FEATURE OF WORK

07 Oct 96

CONTRACT NO. - - -

FEATURE OF WORK	ESTIMATED START FOR FEATURE	INITIAL INSPECTION AFTER PREPARATORY (DAYS)	VARIATIVES

INDEX

SECTION 02050

DEMOLITION

Paragraph		Page
1.1	REFERENCES	02050-1
1.2	GENERAL REQUIREMENTS	02050-1
1.3	SUBMITTALS	02050-1
1.4	DUST CONTROL	02050-1
1.5	PROTECTION	02050-1
1.6	BURNING	02050-2
1.7	USE OF EXPLOSIVES	02050-2
3.1	EXISTING STRUCTURES	02050-2
3.2	UTILITIES	02050-2
3.3	FILLING	02050-2
3.4	DISPOSITION OF MATERIAL	02050-2
3.5	CLEAN UP	02050-2

SECTION 02050

DEMOLITION

PART 1 GENERAL

1.1 REFERENCES: The publications listed below form a part of this specification to the extent referenced. The publications re referred to in the text by basic designation only.

ENGINEERING MANUALS (EM)

EM 385-1-1 (1992) U.S. Army Corps of Engineers Safety and Health Requirements Manual

1.2 GENERAL REQUIREMENTS: The work includes demolition, and removal of resulting rubbish and debris. Rubbish and debris shall be removed from Government property daily, unless otherwise directed, to avoid accumulation at the demolition site. Materials that cannot be removed daily shall be stored in areas specified by the Contracting Officer. In the interest of occupational safety and health, the work shall be performed in accordance with EM 385-1-1, Section 23, Demolition, and other applicable Sections. In the interest of conservation, salvage shall be pursued to the maximum extent possible; salvaged items and materials shall be disposed of as specified.

1.3 SUBMITTALS: Government approval is required for submittals with a "GA" designation; submittals having an "FIO" designation are for information only. The following shall be submitted in accordance with Section 01300 SUBMITTAL PROCEDURES:

SD-18 Records

Work Plan; GA

The procedures proposed for the accomplishment of the work. The procedures shall provide for safe conduct of the work, careful removal and disposition of materials, protection of property which is to remain undisturbed, coordination with other work in progress, and timely disconnection of utility services. The procedures shall include a detailed description of the methods and equipment to be used for each operation, and the sequence of operations in accordance with EM 385-1-1.

1.4 DUST CONTROL: The amount of dust resulting from demolition shall be controlled to prevent the spread of dust to occupied portions of the construction site and to avoid creation of a nuisance in the surrounding area. Use of water will not be permitted when it will result in, or create, hazardous or objectionable conditions such as flooding and pollution.

1.5 PROTECTION

1.5.1 Protection of Personnel: During the demolition work the Contractor shall continuously evaluate the condition of the structure being demolished and take immediate action to protect all personnel working in and around the demolition site. No area, section, or component of floors, roofs, walls, or other structural element will be allowed to be left standing without sufficient bracing, shoring, or lateral support to prevent collapse or failure while workmen remove debris or perform other work in the immediate area.

Floors, roofs, walls, and other structural components that are designed and constructed to stand without lateral support or shoring, and are determined to be in stable condition, may be allowed to remain standing without additional bracing, shoring, of lateral support until demolished. The Contractor shall ensure that no elements determined to be unstable are left unsupported and shall be responsible for

placing and securing bracing, shoring, or lateral supports as may be required as a result of any cutting, removal, or demolition work performed under this contract.

1.5.2 Protection of Existing Property: Before beginning any demolition work, the Contractor shall survey the site and examine the drawings and specifications to determine the extent of the work. The Contractor shall take necessary precautions to avoid damage to existing items to remain in place. The Contractor shall coordinate the work of this section with all other work and shall construct and maintain shoring, bracing, and supports as required.

1.6 BURNING: The use of burning at the project site for the disposal of refuse and debris will not be permitted.

1.7 USE OF EXPLOSIVES: Use of explosives will not be permitted.

PART 2 PRODUCTS (Not Applicable)

PART 3 EXECUTION

3.1 EXISTING STRUCTURES: Existing structures indicated shall be removed to 2-1/2 feet below grade. Includes removal of structure, concrete floor slabs, footing and utilities under and within 5 feet of the building that serve the structure. Cap unused utilities and abandon in place unless it interferences with new work.

3.2 UTILITIES: Disconnection of utility services, with related meters and equipment, are specified in Section 15400 and 16375. Existing utilities shall be removed as indicated. When utility lines are encountered that are not indicated on the drawings, the Contracting Officer shall be notified prior to further work in that area.

3.3 FILLING: Holes, trenches and other hazardous openings shall be filled in accordance with Section 02221.

3.4 DISPOSITION OF MATERIAL: Title to material and equipment to be demolished, except is vested in the Contractor upon receipt of notice to proceed. The Government will not be responsible for the condition, loss or damage to such property after notice to proceed.

3.4.1 Salvageable Items and Material: Contractor shall salvage items and material to the maximum extent possible.

3.4.1.1 Material Salvaged for the Contractor: Material salvaged for the Contractor shall be stored as approved by the Contracting Officer and shall be removed from Government property before completion of the contract. Material salvaged for the Contractor shall not be sold on the site.

3.4.2 Unsalvageable Material: Concrete, and other noncombustible material, except concrete permitted to remain in place, shall be disposed of in the land fill disposal area located on base.

3.5 CLEAN UP: Debris and rubbish shall be removed from trenches and similar excavations. Debris shall be removed and transported in a manner that prevents spillage on streets or adjacent areas. Local regulations regarding hauling and disposal shall apply.

-- End of Section --

INDEX

SECTION 02110

CLEARING

Paragraph		Page
1.1	REFERENCES	02110-1
1.2	DEFINITIONS	02110-1
1.3	SUBMITTALS	02110-1
1.4	MEASUREMENT	02110-1
1.5	PAYMENT	02110-1
3.1	CLEARING	02110-1
3.2	DISPOSAL OF MATERIALS	02110-1

SECTION 02110

CLEARING

PART 1 GENERAL

1.1 REFERENCES (Not Applicable)

1.2 DEFINITIONS

1.2.1 Clearing: Clearing shall consist of the satisfactory disposal of vegetation designated for removal, including down timber, snags, brush, and rubbish occurring within the project area to be cleared.

1.2.2 Grubbing (Not Applicable)

1.3 SUBMITTALS: Government approval is required for submittals with a "GA" designation; submittals having an "FIO" designation are for information only. The following shall be submitted in accordance with Section 01300 SUBMITTAL PROCEDURES:

1.4 MEASUREMENT

1.4.1 Measured Clearing: Clearing will be measured in acres of clearing actually performed. Areas of light brush, shrubs, and other vegetation that can be cut with a brush hook, scythe, or mowing machine will not be measured as clearing.

1.5 PAYMENT

1.5.1 Paid Clearing: Payment for clearing will be made in accordance with the bid schedule for clearing, and this price shall constitute full compensation for all labor, equipment, tools, and incidentals necessary to complete the work specified herein.

PART 2 PRODUCTS (Not Applicable)

PART 3 EXECUTION

3.1 CLEARING: Stumps, roots, brush, and other vegetation in areas to be cleared shall be cut off flush with or below the original ground surface, except such trees and vegetation as may be indicated or directed to be left standing. Clearing shall also include the removal and disposal of structures that obtrude, encroach upon, or otherwise obstruct the work.

3.2 DISPOSAL OF MATERIALS

3.2.1 Materials Other Than Salable Timber: Logs, stumps, roots, brush, rotten wood, and other refuse from the clearing operations shall not be disposed of by burning, except when otherwise approved in writing. Such permission will state the conditions covering the disposal of such products and will also state the areas in which they may be placed.

-- End of Section --

INDEX

SECTION 02210

GRADING

Paragraph		Page
1.1	REFERENCES	02210-1
1.2	UNIT PRICE	02210-1
1.3	DEFINITIONS	02210-2
1.4	SUBMITTALS	02210-2
1.5	SUBSURFACE DATA	02210-2
2.1	BORROW MATERIAL	02210-2
3.1	CONSERVATION OF TOPSOIL	02210-3
3.2	EXCAVATION	02210-3
3.3	PREPARATION OF GROUND SURFACE FOR FILL	02210-3
3.4	COMPACTION	02210-3
3.5	FINISHED EXCAVATION, FILLS, AND EMBANKMENTS	02210-3
3.6	PLACING TOPSOIL	02210-4
3.7	FIELD TESTING CONTROL	02210-4
3.8	PROTECTION	02210-4

SECTION 02210

GRADING

PART 1 GENERAL

1.1 REFERENCES: The publications listed below form a part of this specification to the extent referenced. The publications are referred to in the text by basic designation only.

AMERICAN SOCIETY FOR TESTING AND MATERIALS (ASTM)

ASTM D 1556	(1990) Density and Unit Weight of Soil in Place by the Sand-Cone Method
ASTM D 1557	(1991) Laboratory Characteristics of Soil Using Modified Effort (56,000 ft-lbf/cu. ft. (2,700 kN-m/cu.m.))
ASTM D 2167	(1984; R 1990) Density and Unit Weight of Soil in Place by the Rubber Balloon Method
ASTM D 2487	(1993) Classification of Soils for Engineering Purposes (Unified Soil Classification System)
ASTM D 2922	(1991) Density of Soil and Soil-Aggregate in Place by Nuclear Methods (Shallow Depth)
ASTM D 3017	(1988; R 1993) Water Content of Soil and Rock in Place by Nuclear Methods (Shallow Depth)

1.2 UNIT PRICE

1.2.1 MEASUREMENT

1.2.1.1 Excavation: The unit of measurement for excavation will be the cubic yard, computed by the average end-area method from cross sections taken before and after the excavation and borrow operations. The measurement will include the excavation below grade of unsatisfactory material where ordered, and allowance will be made on the same basis for selected backfill ordered as replacement. The measurement will not include the yardage excavated without authorization or the yardage of any material used for other than directed purposes. Yardage of overburden stripped from borrow pits, unless used as borrow material, will not be paid for. The measurement will not include the yardage of any excavation performed prior to the taking of elevations and measurements of the undisturbed grade.

1.2.1.2 Topsoil: Separate excavation, hauling, and spreading or piling of topsoil and all miscellaneous operations attendant thereto will be considered subsidiary obligations of the Contractor, covered under the Contractor's bid schedule for excavation.

1.2.1.3 Overhaul: The unit of measurement for overhaul will be the station yard. The number of station yards of overhaul to be paid for will be the product of the number of cubic yards of overhaul materials, measured in the original position, multiplied by the overhaul distance measured in stations of 100 feet. The overhaul distance will be the distance in stations between the center of volume of the overhauled material in its original position and the center of volume after placing, minus the free-haul distance in stations. The haul distance will be measured along the shortest route determined as feasible and satisfactory.

1.2.2 PAYMENT

1.2.2.1 Excavation: Excavation will be paid for in accordance with the bid schedule per cubic yard for "Excavation."

1.3 DEFINITIONS

1.3.1 Satisfactory Materials: Materials classified in ASTM D 2487 as GC, SP, GM, SC, SM, CL, GW, GP, and SW, and free from roots and other organic matter, trash, debris, and frozen materials and stones larger than 150 mm (6 inches) in any dimension are satisfactory.

1.3.2 Cohesionless and Cohesive Materials: Cohesive materials include materials classified as GC, SC, ML, CL, MH, and CH. Cohesionless materials include materials classified in ASTM D 2487 as GW, GP, SW, and SP. Materials classified as GM and SM will be identified as cohesionless only when the fines have a plasticity index of zero.

1.3.3 Degree of Compaction: Degree of compaction is a percentage of the maximum density obtained by the test procedure presented in ASTM D 1557 abbreviated below as a percent of laboratory maximum density.

1.3.4 Topsoil: Material obtained from areas indicated on the drawings, suitable for topsoils, as defined under Satisfactory Materials, Subparagraph 1.3.1.

1.4 SUBMITTALS: Government approval is required for submittals with a "GA" designation; submittals having an "FIO" designation are for information only. The following shall be submitted in accordance with Section 01300 SUBMITTAL PROCEDURES:

a. Qualifications of the commercial testing laboratory who will be performing all testing in accordance with paragraph FIELD TESTING CONTROL.

b. Certified test reports and analysis certifying that the satisfactory materials proposed for use at the project site conform to the specified requirements, and for all tests conducted in accordance with paragraph FIELD TESTING CONTROL.

1.5 SUBSURFACE DATA: Subsurface soil boring logs are appended to the SPECIAL CLAUSES. The subsoil investigation report and samples of materials taken from subsurface investigations may be examined at the Soils Engineer's office. These data represent the best subsurface information available; however, variations may exist in the subsurface between boring locations.

PART 2 PRODUCTS

2.1 BORROW MATERIAL: Borrow material shall be selected to meet requirements and conditions of the particular fill for which it is to be used. Necessary clearing, grubbing, disposal of debris, and satisfactory drainage of borrow pits shall be performed by the Contractor as incidental operations to the borrow excavation.

2.1.1 Selection: The source of borrow material shall be the Contractor's responsibility. Unless otherwise provided in the contract, the Contractor shall obtain from the owners the right to procure material, shall pay all royalties and other charges involved, and shall bear all the expense of developing the sources, including rights-of-way for hauling.

2.1.2 Borrow Pits: Except as otherwise permitted, borrow pits shall be excavated to afford adequate drainage. Overburden and other spoil material shall be disposed of or used for special purposes. Borrow

pits shall be neatly trimmed and left in such shape as will facilitate taking accurate measurements after the excavation is completed.

PART 3 EXECUTION

3.1 CONSERVATION OF TOPSOIL: Where indicated, topsoil shall be removed to a depth of 150 millimeters (6 inches) without contamination with subsoil and stockpiled convenient to areas for later application or at locations specified. Topsoil shall be removed to full depth and shall be stored separate from other excavated materials and piled free of roots, stones, and other undesirable materials. Any surplus of topsoil from excavations and grading shall be stockpiled in locations and/or manner approved by the Contracting Officer.

3.2 EXCAVATION: After topsoil removal has been completed, excavation of every description, regardless of material encountered, within the grading limits of the project shall be performed to the lines and grades indicated. Satisfactory excavation material shall be transported to and placed in fill areas within the limits of the work. All unsatisfactory material including any soil which is disturbed by the Contractor's operations or softened due to exposure to the elements and water and surplus material shall be removed from site. In the event that it is necessary to remove unsatisfactory material to a depth greater than specified, the Contracting Officer shall be notified and an adjustment in the contract price will be considered in accordance with the contract. Unsatisfactory material excavated below the grade shown and replaced with satisfactory material as directed shall be included in the contract unit price for excavation. Excavations carried below the depths indicated, without specific directions, shall, except as otherwise specified, be refilled to the proper grade with satisfactory material as directed. All additional work of this nature shall be at the Contractor's expense. Excavation and filling shall be performed in a manner and sequence that will provide drainage at all times. Excavations shall be kept free from water while construction therein is in progress. Material required for fills in excess of that produced by excavation within the grading limits shall be obtained from borrow areas.

3.3 PREPARATION OF GROUND SURFACE FOR FILL: All vegetation, such as roots, brush, heavy sods, heavy growth of grass, and all decayed vegetable matter, rubbish, and other unsatisfactory material within the area upon which fill is to be placed, shall be stripped or otherwise removed before the fill is started. In no case will unsatisfactory material remain in or under the fill area. Sloped ground surfaces steeper than one vertical to four horizontal on which fill is to be placed shall be plowed, stepped, or broken up, as directed, in such manner that the fill material will bond with the existing surface. Prepared surfaces on which compacted fill is to be placed shall be wetted or dried as may be required to obtain the specified moisture content and density.

3.4 COMPACTION: Except for paved areas, each layer of the fill or embankment shall be compacted to at least 90 percent of laboratory maximum density. Areas to be paved and other areas indicated as requiring compaction suitable for paved areas shall be compacted to at least the percentage of laboratory maximum density shown in the Soils Report.

3.5 FINISHED EXCAVATION, FILLS, AND EMBANKMENTS: All areas covered by the project, including excavated and filled sections and adjacent transition areas, shall be uniformly smooth-graded. The finished surface shall be reasonably smooth, compacted, and free from irregular surface changes. The degree of finish shall be that ordinarily obtainable from blade-grader operations, except as otherwise specified. For subgrade areas to be paved, the following shall be accomplished as required: (a) soft or otherwise unsatisfactory material shall be replaced with satisfactory excavated material or other approved materials; (b) rock encountered in the cut sections shall be excavated to a depth of 150 mm (6 inches) below finished grade for the subgrade; (c) low areas resulting from removal of unsatisfactory material or from excavation of rock shall be brought up to required grade with satisfactory materials, and the entire subgrade shall be shaped to line, grade, and cross section and shall be compacted as specified. The surface of embankments or excavated areas for road construction or other areas on which a base course or

pavement is to be placed shall vary not more than 15 mm (0.05 foot) from the established grade and approved cross section. Surfaces other than those that are to be paved shall be finished not more than 45 mm (0.15 foot) above or below the established grade or approved cross section.

3.6 PLACING TOPSOIL: On areas to receive topsoil, the compacted subgrade soil shall be scarified to a 50 mm (2 inch) depth for bonding of topsoil with subsoil. Topsoil then shall be spread evenly to a thickness of 200 mm (8 inches) and graded to the elevations and slopes shown. Topsoil shall not be spread when frozen or excessively wet or dry. Material required for topsoil in excess of that produced by excavation within the grading limits shall be obtained from off-site areas.

3.7 FIELD TESTING CONTROL: Testing shall be the responsibility of the Contractor and shall be performed by an approved commercial testing laboratory or by the Contractor subject to approval. Field density and moisture content tests shall be performed on every 100 square feet of each 8-inch lift placed. Field in-place density shall be determined in accordance with ASTM D 1556, ASTM D 2167, or ASTM D 2922. When ASTM D 2922 is used, the calibration curves shall be checked, and adjusted if necessary, using the sand cone method as described in paragraph Calibration of the ASTM publication. ASTM D 2922 results in a wet unit weight of soil and when using this method, ASTM D 3017 shall be used to determine the moisture content of the soil. The calibration curves furnished with the moisture gauges shall be checked along with density calibration checks as described in ASTM D 3017. The calibration checks of both the density and moisture gauges shall be made at the beginning of a job on each different type of material encountered and at intervals as directed.

3.8 PROTECTION: Newly graded areas shall be protected from traffic and from erosion, and any settlement or washing away that may occur from any cause, prior to acceptance, shall be repaired and grades reestablished to the required elevations and slopes. All work shall be conducted in accordance with the environmental protection requirements of the contract.

-- End of Section --

INDEX

SECTION 02110

CLEARING

Paragraph		**Page**
1.1	REFERENCES	02221-1
1.2	DEFINITIONS	02221-1
1.3	SUBMITTALS	02221-1
2.1	MATERIALS	02221-2
2.2	CAPILLARY WATER BARRIER	02221-2
3.1	CLEARING	02221-2
3.2	TOPSOIL	02221-2
3.3	EXCAVATION	02221-3
3.4	DRAINAGE	02221-3
3.5	CLASSIFICATION OF EXCAVATION	02221-3
3.6	BLASTING	02221-3
3.7	UTILITY AND DRAIN TRENCHES	02221-3
3.8	BORROW	02221-3
3.9	EXCAVATED MATERIALS	02221-3
3.10	SUBGRADE PREPARATION	02221-4
3.11	FILLING AND BACKFILLING	02221-4
3.12	TESTING	02221-4
3.13	CAPILLARY WATER BARRIER	02221-5
3.14	GRADING	02221-5
3.15	SPREADING TOPSOIL	02221-5
3.16	PROTECTION	02221-5

SECTION 02221

EXCAVATION, FILLING AND BACKFILLING FOR BUILDINGS

PART 1 GENERAL

1.1 REFERENCES: The publications listed below form a part of this specification to the extent referenced. The publications are referred to in the text by basic designation only.

AMERICAN SOCIETY FOR TESTING AND MATERIALS (ASTM)

ASTM D 1556	(1990) Density and Unit Weight of Soil in Place by the Sand-Cone Method
ASTM D 1557	(1991) Laboratory Compaction Characteristics of Soil Using Modified Effort (56,000 ft-lbf/cu. ft. (2,700 kN-m/cu.m.))
ASTM D 2167	(1994) Density and Unit Weight Soil in Place by the Rubber Balloon Method
ASTM D 2216	(1992) Laboratory Determination of Water (Moisture) Content of Soil, and Rock
ASTM D 2487	(1993) Classification of Soils Engineering Purposes (Unified SoilClassification System)
ASTM D 2922	(1991) Density of Soil and Soil-Aggregate in Place by Nuclear Methods (Shallow Depth)
ASTM D 2937	(1994) Density of Soil in Place by the Drive-Cylinder Method
ASTM D 3017	(1988; R 1993) Water Content of Soil Rock in Place by Nuclear Methods (Shallow Depth)
ASTM D 4318	(1993) Liquid Limit, Plastic Limit, and Plasticity Index of Soils

1.2 DEFINITIONS

1.2.1 Degree of Compaction

Degree of compaction required is expressed as a percentage of the maximum density obtained by the test procedure presented in ASTM D 1557 abbreviated hereinafter as percent laboratory maximum density.

1.3 SUBMITTALS: Government approval is required for submittals with a "GA" designation; submittals having an "FIO" designation are for information only. The following shall be submitted in accordance with Section 01300 SUBMITTAL PROCEDURES:

a. Copies of all laboratory and field test reports within 24 hours of the completion of the test.

PART 2 PRODUCTS

2.1 MATERIALS

2.1.1 Satisfactory Materials

Satisfactory materials include materials classified in ASTM D 2487 as GW, GP, SW, GC, GM, SP, SC, SM, CLand shall be free of trash, debris, roots or other organic matter, or stones larger than 75 mm (3 inches) in any dimension.

2.1.2 Unsatisfactory Materials

Unsatisfactory materials include materials classified in ASTM D 2487 as Pt, OH, OL, CH, MH and any other materials not defined as satisfactory by the Soils Engineer.

2.1.3 Cohesionless and Cohesive Materials

Cohesionless materials include materials classified in ASTM D 2487 as GW, GP, SW, and SP. Cohesive materials include materials classified as GC, SC, ML, CL, MH, and CH. Materials classified as GM and SM will be identified as cohesionless only when the fines are nonplastic.

2.1.4 Expansive Soils

Expansive soils are defined by the Soils Report and approved by the Soils Engineer.

2.1.5 Nonfrost Susceptible (NFS) Material

Nonfrost susceptible material shall be a uniformly graded washed sand with a maximum particle size of 50 mm (2 inch) and less than 5 percent passing the 0.075 mm (No. 200) size sieve, and with not more than 3 percent by weight finer than 0.02 mm grain size.

2.2 CAPILLARY WATER BARRIER

Capillary Water Barrier shall consist of clean, crushed, nonporous rock, crushed gravel, or uncrushed gravel. The maximum particle size shall be 37.5 mm (1-1/2 inches) and no more than 2 percent by weight shall pass the 4.75 mm (No. 4) size sieve.

PART 3 EXECUTION

3.1 CLEARING: Clearing is specified in Section 02110 CLEARING.

3.2 TOPSOIL: Topsoil shall be stripped to a depth of 150 millimeters (6 inches) below existing grade within the designated excavations and grading lines and deposited in storage piles for later use. Excess topsoil shall be disposed as specified for excess excavated material.

3.3 EXCAVATION: Excavation shall conform to the dimensions and elevations indicated for each building, structure, and footing except as specified hereinafter, and shall include trenching for utility and foundation drainage systems to a point 1.5 m (5 feet) beyond the building line of each building and structure, excavation for outside grease interceptors, underground fuel tanks, and all work incidental thereto. Excavation shall extend a sufficient distance from walls and footings to allow for placing and removal of forms. Excavations below indicated depths will not be permitted except to remove unsatisfactory material. Unsatisfactory material encountered below the grades shown shall be removed as directed and replaced with satisfactory material. Satisfactory material removed below the depths indicated without specific direction of the Contracting Officer shall be replaced at no additional cost to the Government to the indicated excavation grade with satisfactory materials, except that concrete footings shall be increased in thickness to the bottom of the overdepth excavations and over-break in rock excavation. Satisfactory material shall be placed and compacted as specified in paragraph FILLING AND BACKFILLING. Determination of elevations and measurements of approved overdepth excavation of unsatisfactory material below grades indicated shall be done under the direction of the Contracting Officer.

3.4 DRAINAGE

3.4.1 Drainage

Surface water shall be directed away from excavation and construction sites so as to prevent erosion and undermining of foundations. Diversion ditches, dikes and grading shall be provided and maintained as necessary during construction. Excavated slopes and backfill surfaces shall be protected to prevent erosion and sloughing. Excavation shall be performed so that the site and the area immediately surrounding the site and affecting operations at the site shall be continually and effectively drained.

3.5 CLASSIFICATION OF EXCAVATION: Excavation will be unclassified regardless of the nature of material encountered. Rock excavation shall consist of the removal and disposal of boulders 0.75 cubic meter (1 cubic yard) or more in volume; solid rock; materials that cannot be removed without systematic drilling and blasting such as rock material in ledges or aggregate conglomerate deposits that are so firmly cemented as to possess the characteristics of solid rock; and concrete or masonry structures exceeding 0.75 cubic meter (1 cubic yard) in volume, except sidewalks and paving. Hard and compact materials such as cemented gravel, glacial till, and relatively soft or disintegrated rock that can be removed without continuous and systematic drilling and blasting will not be considered as rock excavation. Rock excavation will not be considered as such because of intermittent drilling and blasting that is performed merely to increase production. Excavation of the material claimed as rock shall not be performed until the material has been cross sectioned by the Contractor and approved by the Contracting Officer. Common excavation shall consist of all excavation not classified as rock excavation.

3.6 BLASTING: Blasting will not be permitted.

3.7 UTILITY AND DRAIN TRENCHES: Trenches for underground utilities systems and drain lines shall be excavated to the required alignments and depths. The bottoms of trenches shall be graded to secure the required slope and shall be tamped if necessary to provide a firm pipe bed. Recesses shall be excavated to accommodate bells and joints so that pipe will be uniformly supported for the entire length. Rock, where encountered, shall be excavated to a depth of at least 150 mm (6 inches) below the bottom of the pipe, and the overdepth shall be backfilled with satisfactory material placed and compacted in conformance with paragraph FILLING AND BACKFILLING.

3.8 BORROW: Where satisfactory materials are not available in sufficient quantity from required excavations, approved materials shall be obtained as specified in Section 02210 GRADING.

3.9 EXCAVATED MATERIALS

Satisfactory excavated material required for fill or backfill shall be placed in the proper section of the permanent work required under this section or shall be separately stockpiled if it cannot be readily placed.

Satisfactory material in excess of that required for the permanent work and all unsatisfactory material shall be disposed of[as specified in Section 02210 GRADING.

3.10 SUBGRADE PREPARATION: Unsatisfactory material in surfaces to receive fill or in excavated areas shall be removed and replaced with satisfactory materials. The surface shall be scarified to a depth of 150 mm (6 inches) before the fill is started. Sloped surfaces steeper than 1 vertical to 4 horizontal shall be plowed, stepped, benched, or broken up so that the fill material will bond with the existing material. When subgrades are less than the specified density, the ground surface shall be broken up to a minimum depth of 150 mm, (6 inches,) pulverized, and compacted to the specified density. When the subgrade is part fill and part excavation or natural ground, the excavated or natural ground portion shall be scarified to a depth of 300 mm (12 inches) and compacted as specified for the adjacent fill. Material shall not be placed on surfaces that are muddy, frozen, or contain frost. Compaction shall be accomplished by sheepsfoot rollers, pneumatic-tired rollers, steel-wheeled rollers, or other approved equipment well suited to the soil being compacted. Material shall be moistened or aerated as necessary to provide the moisture content that will readily facilitate obtaining the specified compaction with the equipment used. Minimum subgrade density shall be as specified in paragraph FILLING AND BACKFILLING.

3.11 FILLING AND BACKFILLING: Satisfactory materials shall be used in bringing fills and backfills to the lines and grades indicated and for replacing unsatisfactory materials. Satisfactory materials shall be placed in horizontal layers not exceeding 200 mm (8 inches) in loose thickness, or 150 mm (6 inches) when hand-operated compactors are used. After placing, each layer shall be plowed, disked, or otherwise broken up, moistened or aerated as necessary, thoroughly mixed and compacted as specified. Backfilling shall not begin until construction below finish grade has been approved, underground utilities systems have been inspected, tested and approved, forms removed, and the excavation cleaned of trash and debris. Backfill shall be brought to indicated finish grade and shall include backfill for outside grease interceptors and underground fuel tanks. Backfill shall not be placed in wett or frozen areas. Where pipe is coated or wrapped for protection against corrosion, the backfill material up to an elevation 600 mm (2 feet) above sewer lines and 300 mm (1 foot) above other utility lines shall be free from stones larger than 25.4 mm (1 inch) in any dimension. Heavy equipment for spreading and compacting backfill shall not be operated closer to foundation or retaining walls than a distance equal to the height of backfill above the top of footing; the area remaining shall be compacted in layers not more than 100 mm (4 inches) in compacted thickness with power-driven hand tampers suitable for the material being compacted. Backfill shall be placed carefully around pipes or tanks to avoid damage to coatings, wrappings, or tanks. Backfill shall not be placed against foundation walls prior to 7 days after completion of the walls. As far as practicable, backfill shall be brought up evenly on each side of the wall and sloped to drain away from the wall. Each layer of fill and backfill shall be compacted to not less than the percentage of maximum density specified in the Soils Report.

Approved compacted subgrades that are disturbed by the Contractor's operations or adverse weather shall be scarified and compacted as specified herein before to the required density prior to further construction thereon. Recompaction over underground utilities and heating lines shall be by hand tamping.

3.12 TESTING: Testing shall be the responsibility of the Contractor and shall be performed at no additional cost to the Government. Testing shall be performed by an approved commercial testing laboratory or may be performed by the Contractor subject to approval. Field in-place density shall be determined in accordance with ASTM D 1556, ASTM D 2167, or ASTM D 2922. When ASTM D 2922 is used, the calibration curves shall be checked and adjusted if necessary by the procedure described in ASTM D 2922, paragraph ADJUSTING CALIBRATION CURVE. ASTM D 2922 results in a wet unit weight of soil and when using this method ASTM D 3017 shall be used to determine the moisture content of the soil. The calibration curves furnished with the moisture gauges shall also be checked along with density calibration checks as described in ASTM D 3017. The calibration checks of both the density and moisture gauges shall be made at the beginning of a job on each different type of material encountered and at intervals as directed by the Contracting Officer. ASTM D 2937 shall be used only for soft, fine-grained, cohesive soils. The following number of tests, if performed at the appropriate time, shall be the minimum acceptable for each type operation.

3.12.1 In-Place Densities

3.12.1.1 In-Place Density of Subgrades

One test per 1 square meters (10square foot) or fraction thereof.

3.12.1.2 In-Place Density of Fills and Backfills

One test per 1 square meters (10 square foot) or fraction thereof of each lift for fill or backfill areas compacted by other than hand or hand-operated machines. The density for each lift of fill or backfill materials for trenches, pits, building perimeters or other structures or areas less than 0.6 meters (2 feet) in width, which are compacted with hand or hand-operated machines shall be tested as follows: One test per each area less than 1 square meters, (10 square feet,) or one test for each 6 linear meter (20 linear foot) of long narrow fills 6 meters (20 feet) or more in length.

3.12.2 Moisture Content

In the stockpile, excavation or borrow areas, a minimum of two tests per day per type of material or source of materials being placed is required during stable weather conditions. During unstable weather, tests shall be made as dictated by local conditions and approved moisture content shall be tested in accordance with ASTM D 2216.

3.12.3 Optimum Moisture and Laboratory Maximum Density

Tests shall be made for each type material or source of material including borrow material to determine the optimum moisture and laboratory maximum density values. One representative test per 7.6 cubic meters (10 cubic yards) of fill and backfill, or when any change in material occurs which may affect the optimum moisture content or laboratory maximum density will be made.

3.13 CAPILLARY WATER BARRIER:Capillary water barrier under concrete floor and area-way slabs on grade shall be placed directly on the subgrade and shall be compacted with a minimum of two passes of a hand-operated plate-type vibratory compactor.

3.14 GRADING: Areas within 1.5 m (5 feet) outside of each building and structure line shall be constructed true-to-grade, shaped to drain, and shall be maintained free of trash and debris until final inspection has been completed and the work has been accepted.

3.15 SPREADING TOPSOIL: Areas outside the building lines from which topsoil has been removed shall be topsoiled. The surface shall be free of materials that would hinder planting or maintenance operations. The subgrade shall be pulverized to a depth of 50 mm (2 inches) by disking or plowing for the bonding of topsoil with the subsoil. Topsoil shall then be uniformly spread, graded, and compacted to the thickness, elevations, slopes shown, and left free of surface irregularities. Topsoil shall be compacted by one pass of a cultipacker, roller, or other approved equipment weighing 1.46 kN/m to 2.34 kN/m (100 to 160 pounds per linear foot) of roller. Topsoil shall not be placed when the subgrade is frozen, excessively wet, extremely dry, or in a condition otherwise detrimental to seeding, planting, or proper grading.

3.16 PROTECTION: Settlement or washing that occurs in graded, topsoiled, or backfilled areas prior to acceptance of the work shall be repaired and grades reestablished to the required elevations and slopes.

-- End of Section --

INDEX

SECTION 02222

EXCAVATION, TRENCHING, AND BACKFILLING FOR UTILITIES SYSTEMS

Paragraph		Page
1.1	REFERENCES	02222-1
1.2	RELATED SECTION	02222-1
1.3	MEASUREMENT AND PAYMENT	02222-1
1.4	DEFINITIONS	02222-1
1.5	SUBMITTALS	02222-1
2.1	MATERIALS	02222-2
3.1	EXCAVATION	02222-3
3.2	BACKFILLING AND COMPACTION	02222-4
3.3	SPECIAL REQUIREMENTS	02222-5
3.4	TESTING	02222-6

SECTION 02222

EXCAVATION, TRENCHING, AND BACKFILLING FOR UTILITIES SYSTEMS

PART 1 GENERAL

1.1 REFERENCES: The publications listed below form a part of this specification to the extent referenced. The publications are referred to in the text by basic designation only.

AMERICAN SOCIETY FOR TESTING AND MATERIALS (ASTM)

ASTM D 422	(1963; R 1990) Particle-Size Analysis of Soils
ASTM D 1556	(1990) Density and Unit Weight of Soil in Place by the Sand-Cone Method
ASTM D 1557	(1991) Laboratory Compaction Characteristics of Soil Using Modified Effort (56,000 ft-lbf/cu. ft. (2,700 kN-m/cu. m.))
ASTM D 2167	(1994) Density and Unit Weight of Soil in Place by the Rubber Balloon Method
ASTM D 2487	(1993) Classification of Soils for Engineering Purposes (Unified Soil Classification System
ASTM D 2922	(1991) Density of Soil and Soil-Aggregate in Place by Nuclear Methods (Shallow Depth)
ASTM D 3017	(1988; R 1993) Water Content of Soil and Rock in Place by Nuclear Methods (Shallow Depth)

1.2 RELATED SECTION: Section 02221 — Excavation, Filling, and Backfilling for Buildings.

1.3 MEASUREMENT AND PAYMENT: All measurement and payment will be based on the Contractor's bid schedule for the work herein specified.

1.3.1 Trench Excavation: Trench excavation shall be the number of linear feet measured along the centerline of the trench and excavated to the depths and widths specified for the particular size of pipe. Payment for trench excavation shall constitute full payment for excavation and backfilling operation.

1.4 DEFINITIONS

1.4.1 Degree of Compaction: Degree of compaction shall be expressed as a percentage of the maximum density obtained by the test procedure presented in ASTM D 1557.

1.5 SUBMITTALS: Government approval is required for submittals with a "GA" designation; submittals having an "FIO" designation are for information only. The following shall be submitted in accordance with Section 01300 SUBMITTAL PROCEDURES:

a. Copies of all laboratory and field test reports within 24 hours of the completion of the test; FIO.

PART 2 PRODUCTS

2.1 MATERIALS

2.1.1 Satisfactory Materials: Satisfactory materials shall consist of any material approved by the Soils Engineer.

2.1.2 Unsatisfactory Materials: Unsatisfactory materials shall be materials that do not comply with the requirements for satisfactory materials. Unsatisfactory materials include but are not limited to those materials containing roots and other organic matter, trash, debris, frozen materials and stones larger than 150 millimeters, (6 inches,) and materials classified by the Soils Engineer. Unsatisfactory materials also include man-made fills, refuse, or backfills from previous construction.

2.1.3 Cohesionless and Cohesive Materials: Cohesionless materials shall include materials classified in ASTM D 2487 as GW, GP, SW, and SP. Cohesive materials include materials classified as GC, SC, ML, CL, MH, and CH. Materials classified as GM and SM will be identified as cohesionless only when the fines are nonplastic.

2.1.4 Rock: Rock shall consist of boulders measuring 1/2 cubic yard or more and materials that cannot be removed without systematic drilling and blasting such as rock material in ledges, bedded deposits, unstratified masses and conglomerate deposits, and below ground concrete or masonry structures, exceeding 1/2 cubic yard in volume, except that pavements will not be considered as rock.

2.1.5 Unyielding Material: Unyielding material shall consist of rock and gravelly soils with stones greater than 150 millimeters (6 inches) in any dimension or as defined by the pipe manufacturer, whichever is smaller.

2.1.6 Unstable Material: Unstable material shall consist of materials too wet to properly support the utility pipe, conduit, or appurtenant structure.

2.1.7 Select Granular Material: Select granular material shall consist of well-graded sand, gravel, crushed gravel, crushed stone or crushed slag composed of hard, tough and durable particles, and shall contain not more than 10 percent by weight of material passing a 0.075 mm (No. 200) mesh sieve and no less than 95 percent by weight passing the 25 mm (l inch) sieve. The maximum allowable aggregate size shall be 50 millimeters, (2 inches,) or the maximum size recommended by the pipe manufacturer, whichever is smaller.

2.1.8 Initial Backfill Material: Initial backfill shall consist of select granular material or satisfactory materials free from rocks 50 millimeters (2 inches) or larger in any dimension or free from rocks of such size as recommended by the pipe manufacturer, whichever is smaller. When the pipe is coated or wrapped for corrosion protection, the initial backfill material shall be free of stones larger than 50 millimeters (2 inches) in any dimension or as recommended by the pipe manufacturer, whichever is smaller.

2.1.9 Plastic Marking Tape: Plastic marking tape shall be acid and alkali-resistant polyethylene film, 152 mm (6 inches) wide with minimum thickness of 0.102 mm (0.004 inch). Tape shall have a minimum strength of 12.1 MPa (1750 psi) lengthwise and 10.3 MPa (1500 psi) crosswise. The tape shall be manufactured with integral wires, foil backing or other means to enable detection by a metal detector when the tape is buried up to 1 meter (3 feet) deep. The tape shall be of a type specifically manufactured for marking and locating underground utilities. The metallic core of the tape shall be encased in a protective jacket or provided with other means to protect it from corrosion. Tape color shall be as specified in TABLE 1 and shall bear a continuous printed inscription describing the specific utility.

TABLE 1. Tape Color

Red:	Electric
Yellow:	Gas, Oil, Dangerous Materials
Orange:	Telephone, Telegraph, Television, Police, and Fire Communications

Blue: Water Systems
Green: Sewer Systems

PART 3 EXECUTION

3.1 EXCAVATION: Excavation shall be performed to the lines and grades indicated. Rock excavation shall include removal and disposition of material defined as rock in paragraph MATERIALS. Earth excavation shall include removal and disposal of material not classified as rock excavation. During excavation, material satisfactory for backfilling shall be stockpiled in an orderly manner at a distance from the banks of the trench equal to 1/2 the depth of the excavation, but in no instance closer than 600 mm. (2 feet.) Excavated material not required or not satisfactory for backfill shall be removed from the site. Grading shall be done as may be necessary to prevent surface water from flowing into the excavation, and any water accumulating therein shall be removed to maintain the stability of the bottom and sides of the excavation. Unauthorized overexcavation shall be backfilled in accordance with paragraph BACKFILLING AND COMPACTION at no additional cost to the Government.

3.1.1 Trench Excavation: The trench shall be excavated as recommended by the manufacturer of the pipe to be installed. Trench walls below the top of the pipe shall be sloped, or made vertical, and of such width as recommended in the manufacturer's installation manual. Where no manufacturer's installation manual is available, trench walls shall be made vertical. Trench walls more than 1.5 meters (5 feet) high shall be shored, cut back to a stable slope, or provided with equivalent means of protection for employees who may be exposed to moving ground or cave in. Vertical trench walls more than 1.5 meters (5 feet) high shall be shored. Trench walls which are cut back shall be excavated to at least the angle of repose of the soil. Special attention shall be given to slopes which may be adversely affected by weather or moisture content. The trench width below the top of pipe shall not exceed 600 mm (24 inches) plus pipe outside diameter (O.D.) for pipes of less than 600 mm (24 inches) inside diameter and shall not exceed 900 mm (36 inches) plus pipe outside diameter for sizes larger than 600 mm (24 inches) inside diameter. Where recommended trench widths are exceeded, redesign, stronger pipe, or special installation procedures shall be utilized by the Contractor. The cost of redesign, stronger pipe, or special installation procedures shall be borne by the Contractor without any additional cost to the Government.

3.1.1.1 Bottom Preparation: The bottoms of trenches shall be accurately graded to provide uniform bearing and support for the bottom quadrant of each section of the pipe. Bell holes shall be excavated to the necessary size at each joint or coupling to eliminate point bearing. Stones of 50 millimeters (2 inches) or greater in any dimension, or as recommended by the pipe manufacturer, whichever is smaller, shall be removed to avoid point bearing.

3.1.1.2 Removal of Unyielding Material: Where unyielding material is encountered in the bottom of the trench, such material shall be removed 150 millimeters (6 inches) below the required grade and replaced with suitable materials as provided in paragraph BACKFILLING AND COMPACTION.

3.1.1.3 Removal of Unstable Material: Where unstable material is encountered in the bottom of the trench, such material shall be removed to the depth directed and replaced to the proper grade with select granular material as provided in paragraph BACKFILLING AND COMPACTION. When removal of unstable material is required due to the fault or neglect of the Contractor in his performance of the work, the resulting material shall be excavated and replaced by the Contractor without additional cost to the Government.

3.1.1.4 Excavation for Appurtenances: Excavation for manholes, catch-basins, inlets, or similar structures shall be of sufficient size to permit the placement and removal of forms for the full length and width of structure footings and foundations as shown. Rock shall be cleaned of loose debris and cut to a firm surface either level, stepped, or serrated, as shown or as directed. Loose disintegrated rock and thin strata shall be removed. Removal of unstable material shall be as specified above. When concrete or

masonry is to be placed in an excavated area, special care shall be taken not to disturb the bottom of the excavation. Excavation to the final grade level shall not be made until just before the concrete or masonry is to be placed.

3.1.1.5 Jacking, Boring, and Tunneling: Unless otherwise indicated, excavation shall be by open cut except that sections of a trench may be jacked, bored, or tunneled if, in the opinion of the Contracting Officer, the pipe, cable, or duct can be safely and properly installed and backfill can be properly compacted in such sections.

3.1.1.6 Stockpiles: Stockpiles of satisfactory and unsatisfactory materials shall be placed and graded as specified. Stockpiles shall be kept in a neat and well drained condition, giving due consideration to drainage at all times. The ground surface at stockpile locations shall be cleared, grubbed, and sealed by rubber-tired equipment, excavated satisfactory and unsatisfactory materials shall be separately stockpiled. Stockpiles of satisfactory materials shall be protected from contamination which may destroy the quality and fitness of the stockpiled material. If the Contractor fails to protect the stockpiles, and any material becomes unsatisfactory, such material shall be removed and replaced with satisfactory material from approved sources at no additional cost to the Government.

3.2 BACKFILLING AND COMPACTION: Backfill material shall consist of satisfactory material, select granular material, or initial backfill material as required. Backfill shall be placed in layers not exceeding 150 mm (6 inches) loose thickness for compaction by hand operated machine compactors, and 200 mm (8 inches) loose thickness for other than hand operated machines, unless otherwise specified. Each layer shall be compacted to at least 95 percent maximum density for cohesionless soils and 90 percent maximum density for cohesive soils, unless otherwise specified.

3.2.1 Trench Backfill: Trenches shall be backfilled to the grade shown. The trench shall not be backfilled until all specified tests are performed.

3.2.1.1 Replacement of Unyielding Material: Unyielding material removed from the bottom of the trench shall be replaced with select granular material or initial backfill material.

3.2.1.2 Replacement of Unstable Material: Unstable material removed from the bottom of the trench or excavation shall be replaced with select granular material placed in layers not exceeding 150 mm (6 inches) loose thickness.

3.2.1.3 Bedding and Initial Backfill: Initial backfill material shall be placed and compacted with approved tampers to a height of at least one foot above the utility pipe or conduit. The backfill shall be brought up evenly on both sides of the pipe for the full length of the pipe. Care shall be taken to ensure thorough compaction of the fill under the haunches of the pipe.

3.2.1.4 Final Backfill: The remainder of the trench, except for special materials for roadways, railroads and airfields, shall be filled with satisfactory material. Backfill material shall be placed and compacted as follows:

a. Sidewalks, Turfed or Seeded Areas and Miscellaneous Areas: Backfill shall be deposited in layers of a maximum of 300 mm (12 inch) loose thickness, and compacted to 85 percent maximum density for cohesive soils and 90 percent maximum density for cohesionless soils. Water jetting shall not be allowed to penetrate the initial backfill. Compaction by water flooding or jetting will not be permitted. This requirement shall also apply to all other areas not specifically designated above.

3.2.2 Backfill for Appurtenances: After the manhole, catchbasin, inlet, or similar structure has been constructed, backfill shall be placed in such a manner that the structure will not be damaged by the shock

of falling earth. The backfill material shall be deposited and compacted as specified for final backfill, and shall be brought up evenly on all sides of the structure to prevent eccentric loading and excessive stress.

3.3 SPECIAL REQUIREMENTS: Special requirements for both excavation and backfill relating to the specific utilities are as follows:

3.3.1 Water Lines: Trenches shall be of a depth to provide a minimum cover of 1 meter (3 feet) from the existing ground surface, or from the indicated finished grade, whichever is lower, to the top of the pipe. For fire protection yard mains or piping, an additional 900 millimeters (36 inches) of cover is required.

3.3.2 Plastic Marking Tape: Warning tapes shall be installed directly above the pipe, at a depth of 450 millimeters (18 inches) below finished grade unless otherwise shown.

3.4 TESTING: Testing shall be the responsibility of the Contractor and shall be performed at no additional cost to the Government.

3.4.1 Testing Facilities: Tests shall be performed by an approved commercial testing laboratory or may be tested by facilities furnished by the Contractor. No work requiring testing will be permitted until the facilities have been inspected and approved by the Contracting Officer. The first inspection shall be at the expense of the Government. Cost incurred for any subsequent inspection required because of failure of the first inspection will be charged to the Contractor.

3.4.2 Testing of Backfill Materials: Characteristics of backfill materials shall be determined in accordance with particle size analysis of soils ASTM D 422 and moisture-density relations of soils ASTM D 1557. A minimum of one particle size analysis and one moisture-density relation test shall be performed on each different type of material used for bedding and backfill.

3.4.3 Field Density Tests: Tests shall be performed in sufficient numbers to ensure that the specified density is being obtained. A minimum of one field density test per lift of backfill for every 3 meters (10 feet) of installation shall be performed. One moisture density relationship shall be determined for every 1500 cubic yards of material used. Field in-place density shall be determined in accordance with ASTM D 1556, ASTM D 2167, or ASTM D 2922. When ASTM D 2922 is used, the calibration curves shall be checked and adjusted using the sand cone method as described in paragraph Calibration of the ASTM publication. ASTM D 2922 results in a wet unit weight of soil and when using this method, ASTM D 3017 shall be used to determine the moisture content of the soil. The calibration curves furnished with the moisture gauges shall be checked along with density calibration checks as described in ASTM D 3017. The calibration checks of both the density and moisture gauges shall be made at the beginning of a job, on each different type of material encountered, at intervals as directed by the Contracting Officer. Copies of calibration curves, results of calibration tests, and field and laboratory density tests shall be furnished to the Contracting Officer. Trenches improperly compacted shall be reopened to the depth directed, then refilled and compacted to the density specified at no additional cost to the Government.

3.4.4 Displacement of Sewers: After other required tests have been performed and the trench backfill compacted to 0.6 meter (2 feet) above the top of the pipe, the pipe shall be inspected to determine whether significant displacement has occurred. This inspection shall be conducted in the presence of the Contracting Officer. Pipe shall be inspected by shining a light or laser between manholes or manhole locations, or by the use of television cameras passed through the pipe. If, in the judgement of the Contracting Officer, the interior of the pipe shows poor alignment or any other defects that would cause improper functioning of the system, the defects shall be remedied as directed at no additional cost to the Government.

-- End of Section --

INDEX

SECTION 02511

CONCRETE PADS

Paragraph		Page
1.1	REFERENCES	02511-1
1.2	MEASUREMENT FOR PAYMENT	02511-2
1.3	SUBMITTALS	02511-2
1.4	WEATHER LIMITATIONS	02511-2
1.5	PLANT, EQUIPMENT, MACHINES, AND TOOLS	02511-2
2.1	CONCRETE	02511-3
2.2	CONCRETE CURING MATERIALS	02511-3
2.3	CONCRETE PROTECTION MATERIALS	02511-3
2.4	JOINT FILLER STRIPS	02511-3
2.5	JOINT SEALANTS	02511-4
2.6	FORM WORK	02511-4
3.1	SUBGRADE PREPARATION	02511-4
3.2	FORM SETTING	02511-5
3.3	PAD CONCRETE PLACEMENT AND FINISHING	02511-5
3.4	PAD JOINTS	02511-5
3.5	CURING AND PROTECTION	02511-6
3.6	FIELD QUALITY CONTROL	02511-8
3.7	SURFACE DEFICIENCIES AND CORRECTIONS	02511-9

SECTION 02511

CONCRETE SIDEWALKS AND CURBS AND GUTTERS

PART 1 GENERAL

1.1 REFERENCES

The publications listed below form a part of this specification to the extent referenced. The publications are referred to in the text by basic designation only.

AMERICAN SOCIETY FOR TESTING AND MATERIALS (ASTM)

ASTM A 185	(1990a) Steel Welded Wire Fabric Plain, for Concrete Reinforcement
ASTM A 615	(1990) Deformed and Plain Billet-Steel Bars for Concrete Reinforcement
ASTM A 616	(1990) Rail-Steel Deformed and Plain Bars for Concrete Reinforcement
ASTM A 617	(1990) Axle-Steel Deformed and Plain Bars for Concrete Reinforcement
ASTM C 31	(1991) Making and Curing Concrete Test Specimens in the Field
ASTM C 143	(1990a) Slump of Hydraulic Concrete
ASTM C 171	(1991) Sheet Materials for Curing Concrete
ASTM C 172	(1990) Sampling Freshly Mixed Concrete
ASTM C 173	(1978) Air Content of Freshly Mixed Concrete by the Volumetric Method
ASTM C 231	(1991b) Air Content of Freshly Mixed Concrete by the Pressure Method
ASTM C 309	(1991) Liquid Membrane-Forming Compounds for Curing Concrete
ASTM D 1751	(1983; R 1991) Preformed Expansion Joint Filler for Concrete Paving and Structural Construction (Nonextruding and Resilient Bituminous Types)
ASTM D 1752	(1984; R 1992) Preformed Sponge Rubber and Cork Expansion Joint Fillers for Concrete Paving and Structural Construction

CORPS OF ENGINEERS (COE)

COE CRD-C 527	(1988) Standard Specification for Joint Sealants, Cold-Applied, Non-Jet-Fuel-Resistant, for Rigid and Flexible Pavements

FEDERAL SPECIFICATIONS (FS)

FS CCC-C-467	(Rev C) Cloth, Burlap, Jute (or Kenaf)
FS SS-S-1401	(Rev C; Notice 1) Sealant, Joint, Non-Jet-Fuel-Resistant, Hot-Applied, for Portland Cement and Asphalt Concrete Pavements

1.2 MEASUREMENT FOR PAYMENT

1.2.1 Pads

The quantities of concrete pads to be paid for will be in accordance with the Contractor's bid schedule.

1.3 SUBMITTALS

Government approval is required for submittals with a "GA" designation; submittals having an "FIO" designation are for information only. The following shall be submitted in accordance with Section 01300 SUBMITTAL PROCEDURES:

a. Copies of all test reports within 24 hours of completion of the test.

b. Copies of certified delivery tickets for all concrete used in the construction.

1.4 WEATHER LIMITATIONS

1.4.1 Placing During Cold Weather

Concrete placement shall be discontinued when the air temperature reaches 5 degrees C (40 degrees F) and is falling. Placement may begin when the air temperature reaches 2 degrees C (35 degrees F) and is rising. Provisions shall be made to protect the concrete from freezing during the specified curing period. If necessary to place concrete when the temperature of the air, aggregates, or water is below 2 degrees C, (35 degrees F,) placement shall be approved in writing. Approval shall be contingent upon full conformance with the following provisions. The underlying material shall be prepared and protected so that it is entirely free of frost when the concrete is deposited. Aggregates shall be heated as necessary to result in the temperature of the in-place concrete being between 10 and 30 degrees C. (50 and 85 degrees F.) Methods and equipment for heating shall be approved. The aggregates shall be free of ice, snow, and frozen lumps before entering the mixer. Covering and other means shall be provided for maintaining the concrete at a temperature of at least 10 degrees C (50 degrees F) for not less than 72 hours after placing, and at a temperature above freezing for the remainder of the curing period.

1.4.2 Placing During Warm Weather

The temperature of the concrete as placed shall not exceed 30 degrees C (85 degrees F) except where an approved retarder is used. The mixing water and/or aggregates shall be cooled, if necessary, to maintain a satisfactory placing temperature. In no case shall the placing temperature exceed 35 degrees C. (95 degrees F.)

1.5 PLANT, EQUIPMENT, MACHINES, AND TOOLS

1.5.1 General Requirements

Plant, equipment, machines, and tools used in the work shall be subject to approval and shall be maintained in a satisfactory working condition at all times. The equipment shall have the capability of producing the required product, meeting grade controls, thickness control and smoothness requirements as specified. Use of the equipment shall be discontinued if it produces unsatisfactory results. The Contracting Officer shall have access at all times to the plant and equipment to ensure proper operation and compliance with specifications.

PART 2 PRODUCTS

2.1 CONCRETE: Concrete shall conform to the applicable requirements of Section 02513 CONCRETE PAVEMENT FOR ROADS AND AIRFIELDS except as otherwise specified. Concrete shall have a minimum compressive strength of 24 MPa (3500 psi) at 28 days. Maximum size of aggregate shall be 37.5 mm. (1-1/2 inches.)

2.1.1 Air Content

Mixtures may have air content by volume of concrete of 5 to 7 percent, based on measurements made immediately after discharge from the mixer.

2.1.2 Slump

The concrete slump shall be 75 millimeters (3 inches) where determined in accordance with ASTM C 143.

2.1.3 Reinforcement Steel

Reinforcement bars shall conform to ASTM A 615, ASTM A 616, or ASTM A 617. Wire mesh reinforcement shall conform to ASTM A 185.

2.2 CONCRETE CURING MATERIALS

2.2.1 Impervious Sheet Materials

Impervious sheet materials shall conform to ASTM C 171, type optional, except that polyethylene film, if used, shall be white opaque.

2.2.2 Burlap

Burlap shall conform to FS CCC-C-467.

2.2.3 White Pigmented Membrane-Forming Curing Compound

White pigmented membrane-forming curing compound shall conform to ASTM C 309, Type 2.

2.3 CONCRETE PROTECTION MATERIALS: Concrete protection materials shall be a linseed oil mixture of equal parts, by volume, of linseed oil and either mineral spirits, naphtha, or turpentine. At the option of the contractor, commercially prepared linseed oil mixtures, formulated specifically for application to concrete to provide protection against the action of deicing chemicals may be used, except that emulsified mixtures are not acceptable.

2.4 JOINT FILLER STRIPS

2.4.1 Contraction Joint Filler for Curb and Gutter

Contraction joint filler for curb and gutter shall consist of hard-pressed fiberboard.

2.4.2 Expansion Joint Filler, Premolded

Expansion joint filler, premolded, shall conform to ASTM D 1751 or ASTM D 1752, 9.5 mm (3/8 inch) (3/8 inch) thick, unless otherwise indicated.

2.5 JOINT SEALANTS

2.5.1 Joint Sealant, Cold-Applied

Joint sealant, cold-applied shall conform to COE CRD-C 527.

2.5.2 Joint Sealant, Hot-Poured

Joint sealant, hot-poured shall conform to FS SS-S-1401.

2.6 FORM WORK: Form work shall be designed and constructed to insure that the finished concrete will conform accurately to the indicated dimensions, lines, and elevations, and within the tolerances specified. Forms shall be of wood or steel, straight, of sufficient strength to resist springing during depositing and consolidating concrete. Wood forms shall be surfaced plank, 50 mm (2-inch) nominal thickness, straight and free from warp, twist, loose knots, splits or other defects. Wood forms shall have a nominal length of 3 m. (10 feet.) Radius bends may be formed with 19 mm (3/4-inch) boards, laminated to the required thickness. Steel forms shall be channel-formed sections with a flat top surface and with welded braces at each end and at not less than two intermediate points. Ends of steel forms shall be interlocking and self-aligning. Steel forms shall include flexible forms for radius forming, corner forms, form spreaders, and fillers. Steel forms shall have a nominal length of 3 m (10 feet) with a minimum of two welded stake pockets per form. Stake pins shall be solid steel rods with chamfered heads and pointed tips designed for use with steel forms.

2.6.1 Concrete Pads

Pads forms shall be of a height equal to the full depth of the finished concrete slab shown in plan.

PART 3 EXECUTION

3.1 SUBGRADE PREPARATION: The subgrade shall be constructed to the specified grade and cross section prior to concrete placement. Subgrade shall be placed and compacted to conform with applicable requirements of Section 02511.

3.1.1 Pad Subgrade

The subgrade shall be tested for grade and cross section with a template extending the full width of the sidewalk and supported between side forms.

3.1.2 Maintenance of Subgrade

The subgrade shall be maintained in a smooth, compacted condition in conformity with the required section and established grade until the concrete is placed. The subgrade shall be in a moist condition when concrete is placed. The subgrade shall be prepared and protected so as to produce a subgrade free from frost when the concrete is deposited.

3.2 FORM SETTING: Forms shall be carefully set to the indicated alignment, grade and dimensions. Forms shall be held rigidly in place by a minimum of three stakes per form placed at intervals not to exceed 1.2 meters. (4 feet.) Corners, deep sections, and radius bends shall have additional stakes and braces, as required. Clamps, spreaders, and braces shall be used where required to insure rigidity in the forms. Forms shall be removed without injuring the concrete. Bars or heavy tools shall not be used against the concrete in removing the forms. Any concrete found defective after form removal shall be promptly and satisfactorily repaired. Forms shall be cleaned and coated with form oil each time before concrete is placed. Wood forms may, instead, be thoroughly wetted with water before concrete is placed, except that with probable freezing temperatures, oiling is mandatory.

3.2.1 Pads

Forms for sidewalks shall be set with the upper edge true to line and grade with an allowable tolerance of 3 mm (1/8 inch) in any 3 m (10-foot) long section. After forms are set, grade and alignment shall be checked with a 3.05 m (10-foot) straightedge. Forms shall have a transverse slope as indicated with the low side adjacent to the roadway. Side forms shall not be removed for 12 hours after finishing has been completed.

3.3 PAD CONCRETE PLACEMENT AND FINISHING

3.3.1 Formed Pads

Concrete shall be placed in the forms in one layer of such thickness that when consolidated and finished the sidewalks will be of the thickness indicated. After concrete has been placed in the forms, a strike-off guided by side forms shall be used to bring the surface to proper section to be compacted. The concrete shall be consolidated with an approved vibrator, and the surface shall be finished to grade with a wood float, bull float, or darby, edged and broom finished.

3.3.2 Concrete Finishing

After straightedging, when most of the water sheen has disappeared, and just before the concrete hardens, the surface shall be finished to a smooth and uniformly fine granular or sandy texture free of waves, irregularities, or tool marks. A scored surface shall be produced by brooming with a fiber-bristle brush in a direction transverse to that of the traffic.

3.3.3 Edge and Joint Finishing

All slab edges, including those at formed joints, shall be finished carefully with an edger having a radius of 3 mm. (1/8 inch.) Transverse joint shall be edged before brooming, and the brooming shall eliminate the flat surface left by the surface face of the edger. Corners and edges which have crumbled and areas which lack sufficient mortar for proper finishing shall be cleaned and filled solidly with a properly proportioned mortar mixture and then finished.

3.3.4 Surface and Thickness Tolerances

Finished surfaces shall not vary more than 7.9 mm (5/16 inch) from the testing edge of a 3.05 m (10-foot) straightedge. Permissible deficiency in section thickness will be up to 6.4 mm (1/4 inch).

3.4 PAD JOINTS: Sidewalk joints shall be constructed to divide the surface into rectangular areas. Transverse contraction joints shall be spaced at a distance equal to the sidewalk width or 1.5 m (5 feet) on centers, whichever is less, and shall be continuous across the slab. Longitudinal contraction joints shall be constructed along the centerline of all sidewalks 3 m (10 feet) or more in width. Expansion joints shall be formed about structures and features which project through or into the sidewalk pavement, using joint filler of the type, thickness, and width indicated.

3.4.1 Contraction Joints

The contraction joints shall be formed in the fresh concrete by cutting a groove in the top portion of the slab to a depth of at least one-fourth of the sidewalk slab thickness, using a jointer to cut the groove, or by sawing a groove in the hardened concrete with a power-driven saw, unless otherwise approved. Sawed joints shall be constructed by sawing a groove in the concrete with a 3 mm (1/8-inch) blade to the depth indicated. An ample supply of saw blades shall be available on the job before concrete placement is started, and at least one standby sawing unit in good working order shall be available at the jobsite at all times during the sawing operations.

3.4.2 Expansion Joints

Expansion joints shall be formed with12.7 mm (1/2 inch) joint filler strips. Joint filler shall be placed with top edge 6 mm (1/4 inch) below the surface and shall be held in place with steel pins or other devices to prevent warping of the filler during floating and finishing. Immediately after finishing operations are completed, joint edges shall be rounded with an edging tool having a radius of 3 mm, (1/8 inch,) and concrete over the joint filler shall be removed. At the end of the curing period, expansion joints shall be carefully cleaned and filled with joint sealer.

3.4.3 Reinforcement Steel Placement

Reinforcement steel shall be accurately and securely fastened in place with suitable supports and ties before the concrete is placed.

3.5 CURING AND PROTECTION

3.5.1 General Requirements

Concrete shall be protected against loss of moisture and rapid temperature changes for at least 7 days from the beginning of the curing operation. Unhardened concrete shall be protected from rain and flowing water. All equipment needed for adequate curing and protection of the concrete shall be on hand and ready for use before actual concrete placement begins. Protection shall be provided as necessary to prevent cracking of the pavement due to temperature changes during the curing period.

3.5.1.1 Mat Method

The entire exposed surface shall be covered with two or more layers of burlap. Mats shall overlap each other at least 150 mm. (6 inches.) The mat shall be thoroughly wetted with water prior to placing on concrete surface and shall be kept continuously in a saturated condition and in intimate contact with concrete for not less than 7 days.

3.5.1.2 Impervious Sheeting Method

The entire exposed surface shall be wetted with a fine spray of water and then covered with impervious sheeting material. Sheets shall be laid directly on the concrete surface with the light-colored side up and overlapped 300 mm (12 inches) when a continuous sheet is not used. The curing medium shall not be less than 450 mm (18-inches) wider than the concrete surface to be cured, and shall be securely weighted down by heavy wood planks, or a bank of moist earth placed along edges and laps in the sheets. Sheets shall be satisfactorily repaired or replaced if torn or otherwise damaged during curing. The curing medium shall remain on the concrete surface to be cured for not less than 7 days.

3.5.1.3 Membrane Curing Method

A uniform coating of white-pigmented membrane-curing compound shall be applied to the entire exposed surface of the concrete as soon after finishing as the free water has disappeared from the finished surface. Formed surfaces shall be coated immediately after the forms are removed and in no case longer than 1 hour after the removal of forms. Concrete shall not be allowed to dry before the application of the membrane. If any drying has occurred, the surface of the concrete shall be moistened with a fine spray of water and the curing compound applied as soon as the free water disappears. Curing compound shall be applied in two coats by hand-operated pressure sprayers at a coverage of approximately 5 square meters per liter (200 square feet per gallon) (200 square feet per gallon) for both coats. The second coat shall be applied in a direction approximately at right angles to the direction of application of the first coat. The compound shall form a uniform, continuous, coherent film that will not check, crack, or peel and shall be free from pinholes or other imperfections. If pinholes, abrasion, or other discontinuities exist, an additional coat shall be applied to the affected areas within 30 minutes. Concrete surfaces that are subjected to heavy rainfall within 3 hours after the curing compound has been applied shall be resprayed by the method and at the coverage specified above. Areas where the curing compound is damaged by subsequent construction operations within the curing period shall be resprayed. Necessary precautions shall be taken to insure that the concrete is properly cured at sawed joints, and that no curing compound enters the joints. The top of the joint opening and the joint groove at exposed edges shall be tightly sealed before the concrete in the region of the joint is resprayed with curing compound. The method used for sealing the joint groove shall prevent loss of moisture from the joint during the entire specified curing period. Approved standby facilities for curing concrete pavement shall be provided at a location accessible to the jobsite for use in the event of mechanical failure of the spraying equipment or other conditions that might prevent correct application of the membrane-curing compound at the proper time. Concrete surfaces to which membrane-curing compounds have been applied shall be adequately protected during the entire curing period from pedestrian and vehicular traffic, except as required for joint-sawing operations and surface tests, and from any other possible damage to the continuity of the membrane.

3.5.2 Backfilling

After curing, debris shall be removed and the area adjoining the concrete shall be backfilled, graded, and compacted to conform to the surrounding area in accordance with lines and grades indicated.

3.5.3 Protection

Completed concrete shall be protected from damage until accepted. The Contractor shall repair damaged concrete and clean concrete discolored during construction. Concrete that is damaged shall be removed and reconstructed for the entire length between regularly scheduled joints. Refinishing the damaged portion will not be acceptable. Removed damaged portions shall be disposed of as directed.

3.5.4 Protective Coating

Protective coating of linseed oil mixture shall be applied to the exposed-to-view concrete surface.

3.5.4.1 Application

Curing and backfilling operation shall be completed prior to applying protective coating. Concrete shall be surface dry and thoroughly clean before each application. Coverage shall be not more than 11 square meters per liter (50 square yards per gallon) for first application and not more than 15.5 square meters per liter (70 square yards per gallon) for second application, except that the number of applications and coverage for each application for commercially prepared mixture shall be in accordance with the manufacturer's instructions. Coated surfaces shall be protected from vehicular and pedestrian traffic until dry.

3.5.4.2 Precautions

Protective coating shall not be heated by direct application of flame or electrical heaters and shall be protected from exposure to open flame, sparks, and fire adjacent to open containers or applicators. Material shall not be applied at temperatures lower than 10 degrees C. (50 degrees F.)

3.6 FIELD QUALITY CONTROL

3.6.1 General Requirements

The Contractor shall perform the inspection and tests described and meet the specified requirements for inspection details and frequency of testing. Based upon the results of these inspections and tests, the Contractor shall take the action and submit reports as required below, and any additional tests to insure that the requirements of these specifications are met.

3.6.2 Concrete Testing

3.6.2.1 Strength Testing

The Contractor shall provide molded concrete specimens for strength tests. Samples of concrete placed each day shall be taken not less than once a day nor less than once for every 190 cubic meters (250 cubic yards) of concrete. The samples for strength tests shall be taken in accordance with ASTM C 172. Cylinders for acceptance shall be molded in conformance with ASTM C 31 by an approved testing laboratory. Each strength test result shall be the average of two test cylinders from the same concrete sample tested at 28 days, unless otherwise specified or approved. Concrete specified on the basis of compressive strength will be considered satisfactory if the averages of all sets of three consecutive strength test results equal or exceed the specified strength, and no individual strength test result falls below the specified strength by more than 4 MPa. (500 psi.)

3.6.2.2 Air Content

Air content shall be determined in accordance with ASTM C 173 or ASTM C 231. ASTM C 231 shall be used with concretes and mortars made with relatively dense natural aggregates. Two tests for air content shall be made on randomly selected batches of each class of concrete placed during each shift. Additional tests shall be made when excessive variation in concrete workability is reported by the placing foreman or the Government inspector. If results are out of tolerance, the placing foreman shall be notified and he shall take appropriate action to have the air content corrected at the plant. Additional tests for air content will be performed on each truckload of material until such time as the air content is within the tolerance specified.

3.6.2.3 Slump Test

Two slump tests shall be made on randomly selected batches of each class of concrete for every 190 cubic meters, (250 cubic yards,) or fraction thereof, of concrete placed during each shift. Additional tests will be performed when excessive variation in the workability of the concrete is noted or when excessive crumbling or slumping is noticed along the edges of slip-formed concrete.

3.6.3 Thickness Evaluation

The anticipated thickness of the concrete shall be determined prior to placement by passing a template through the formed section or by measuring the depth of opening of the extrusion template of the curb forming machine. If a slip form paver is used for sidewalk placement, the subgrade shall be true to grade prior to concrete placement and the thickness will be determined by measuring each edge of the completed slab.

3.6.4 Surface Evaluation

The finished surface of each category of the completed work shall be uniform in color and free of blemishes and form or tool marks.

3.7 SURFACE DEFICIENCIES AND CORRECTIONS

3.7.1 Thickness Deficiency

When measurements indicate that the completed concrete section is deficient in thickness by more than 6 mm (1/4 inch) the deficient section will be removed, between regularly scheduled joints, and replaced.

3.7.2 High Areas

In areas not meeting surface smoothness and plan grade requirements, high areas shall be reduced either by rubbing the freshly finished concrete with carborundum brick and water when the concrete is less than 36 hours old or by grinding the hardened concrete with an approved surface grinding machine after the concrete is 36 hours old or more. The area corrected by grinding the surface of the hardened concrete shall not exceed 5 percent of the area of any integral slab, and the depth of grinding shall not exceed 6 mm. (1/4 inch.) All pavement areas requiring grade or surface smoothness corrections in excess of the limits specified above shall be removed and replaced.

3.7.3 Appearance

Exposed surfaces of the finished work will be inspected by the Government and any deficiencies in appearance will be identified. Areas which exhibit excessive cracking, discoloration, form marks, or tool marks or which are otherwise inconsistent with the overall appearances of the work shall be removed and replaced.

-- End of Section --

INDEX

SECTION 02551

BITUMINOUS PAVING FOR ROADS, STREETS AND OPEN STORAGE AREAS

Paragraph		Page
1.1	REFERENCES	02551-1
1.2	UNIT PRICES	02551-2
1.3	SUBMITTALS	02551-2
1.4	PLANT, EQUIPMENT, MACHINES, AND TOOLS	02551-2
1.5	WEATHER LIMITATIONS	02551-3
1.6	PROTECTION OF PAVEMENT	02551-3
1.7	GRADE AND SURFACE-SMOOTHNESS REQUIREMENTS	02551-3
1.8	GRADE CONTROL	02551-3
1.9	SAMPLING AND TESTING	02551-3
1.10	DELIVERY, STORAGE, AND HANDLING OF MATERIALS	02551-4
1.11	ACCESS TO PLANT AND EQUIPMENT	02551-4
1.12	WAYBILLS AND DELIVERY TICKETS	02551-4
2.1	BITUMINOUS HOT MIX	02551-4
2.2	PROPORTIONING OF MIXTURE	02551-5
3.1	BASE COURSE CONDITIONING	02551-7
3.2	PREPARATION OF BITUMINOUS MIXTURES	02551-7
3.3	WATER CONTENT OF AGGREGATES	02551-7
3.4	STORAGE OF BITUMINOUS PAVING MIXTURE	02551-8
3.5	TRANSPORTATION OF BITUMINOUS MIXTURE	02551-8
3.6	SURFACE PREPARATION OF UNDERLYING COURSE	02551-8
3.7	PRIME COATING	02551-8
3.8	TACK COATING	02551-8
3.9	PLACING	02551-8
3.10	COMPACTION OF MIXTURE	02551-9
3.11	JOINTS	02551-9
3.12	ACCEPTABILITY OF WORK	02551-10

SECTION 02551

BITUMINOUS PAVING FOR ROADS, STREETS AND OPEN STORAGE AREAS

PART 1 GENERAL

1.1 REFERENCES: The publications listed below form a part of this specification to the extent referenced. The publications are referred to in the text by basic designation only.

AMERICAN SOCIETY FOR TESTING AND MATERIALS (ASTM)

ASTM C 29	(1991a) Unit Weight and Voids in Aggregate
ASTM C 88	(1990) Soundness of Aggregates by Use of Sodium Sulfate or Magnesium Sulfate
ASTM C 117	(1990) Materials Finer than 75-micrometer (No 200) Sieve in Mineral Aggregates by Washing
ASTM C 127	(1988) Specific Gravity and Absorption of Coarse Aggregate
ASTM C 128	(1988) Specific Gravity and Absorption of Fine Aggregate
ASTM C 136	(1984a) Sieve Analysis of Fine and Coarse Aggregates
ASTM C 183	(1988) Sampling and the Amount of Testing of Hydraulic Cement
ASTM D 5	(1986) Penetration of Bituminous Materials
ASTM D 75	(1987) Sampling Aggregates
ASTM D 140	(1988) Sampling Bituminous Materials
ASTM D 242	(1985; R 1990) Mineral Filler for Bituminous Paving Mixtures
ASTM D 422	(1963; R 1990) Particle-Size Analysis of Soils
ASTM D 946	(1982) Penetration-Graded Asphalt Cement for Use in Pavement Construction
ASTM D 1250	(1980; R 1990) Petroleum Measurement Tables
ASTM D 2041	(1991) Theoretical Maximum Specific Gravity and Density of Bituminous Paving Mixtures
ASTM D 2172	(1992) Quantitative Extraction of Bitumen from Bituminous Paving Mixtures
ASTM D 2216	(1990) Laboratory Determination of Water (Moisture) Content of Soil, and Rock
ASTM D 3381	(1983) Viscosity-Graded Asphalt Cement for Use in Pavement Construction
ASTM D 3515	(1989) Hot-Mixed, Hot-Laid Bituminous Paving Mixtures

1.2 UNIT PRICES

1.2.1 Measurement

1.2.1.1 Bituminous Material: Bituminous material to be paid for shall be the number of metric tons (2000-pound tons) of materials outlined in the Contractor's bid schedule.

1.2.2 Payment: Quantities of course mixtures, determined as specified herein, will be paid in accordance with the Contractor's bid schedule. Payment shall constitute full compensation for preparing or reconditioning the base course or existing pavement; for furnishing all materials, equipment, plant, and tools; and for labor and other incidentals necessary to complete work required.

1.3 SUBMITTALS: Government approval is required for submittals with a "GA" designation; submittals having an "FIO" designation are for information only. The following shall be submitted in accordance with Section 01300 SUBMITTAL PROCEDURES:

a. Copies of test results.

b. Samples

1. Bituminous Pavement.

2. Samples of the materials in the quantities indicated below for the job mix formula.

3. Aggregate and mineral filler to be blended 200 pounds in approximately the same proportions as used in the project.

4. Asphalt Cement 5 gallons

5. Aggregate samples when new sources are developed, with a plan for operation, 28 days before starting production. Samples of the asphalt cement specified, not less than 28 days before production.

c. Waybills and delivery tickets, during progress of the work.

1.4 PLANT, EQUIPMENT, MACHINES, AND TOOLS

1.4.1 General: The bituminous plant shall be of such capacity to produce the quantities of bituminous mixtures required. Hauling equipment, paving machines, rollers, miscellaneous equipment, and tools shall be provided in sufficient numbers and capacity and in proper working condition to place the bituminous paving mixtures at a rate equal to the plant output.

1.4.2 Mixing Plants: The mixing plant shall be an automatic or semiautomatic controlled commercially manufactured unit designed and operated to consistently produce a mixture within the job-mix formula (JMF). The plant shall have a minimum capacity of 50 tons per hour. Drum mixers shall be prequalified at the production rate to be used during actual mix production. The prequalification tests will include extraction and recovery of the asphalt cement in accordance with ASTM D 2172 and ASTM D 1856. The penetration of the recovered asphalt binder shall not be less than 60 percent of the original penetration, as measured in accordance with ASTM D 5.

1.4.3 Straightedge: The Contractor shall furnish and maintain at the site, in good condition, one 3.66 m (12-foot) straightedge for each bituminous paver. Straightedge shall be made available for Government use. Straightedges shall be constructed of aluminum or other lightweight metal and shall have blades of

box or box-girder cross section with flat bottom reinforced to insure rigidity and accuracy. Straightedges shall have handles to facilitate movement on pavement.

1.5 WEATHER LIMITATIONS: Unless otherwise directed, bituminous courses shall not be constructed when temperature of the surface of the existing pavement or base course is below 5 degrees C. (40 degrees F.)

1.6 PROTECTION OF PAVEMENT: After final rolling, no vehicular traffic of any kind shall be permitted on the pavement until the pavement has cooled to 60 degrees C. (140 degrees F.)

1.7 GRADE AND SURFACE-SMOOTHNESS REQUIREMENTS: Finished surface of bituminous courses, when tested as specified below and in paragraph ACCEPTABILITY OF WORK, shall conform to gradeline and elevations shown and to surface-smoothness requirements specified.

1.7.1 Plan Grade: The grade of the completed surface shall not deviate more than 15.2 mm (0.05 foot) from the plan grade.

1.7.2 Surface Smoothness: When a 3.66 m (12-foot) straightedge is laid on the surface parallel with the centerline of the paved area or transverse from crown to pavement edge, the surface shall vary not more than 6.4 mm (1/4 inch) from the straightedge.

1.8 GRADE CONTROL: Lines and grades shall be established and maintained by means of line and grade stakes placed at site of work in accordance with the SPECIAL CLAUSES. Elevations of bench marks used by the Contractor for controlling pavement operations at the site of work will be determined, established, and maintained by the Government. Finished pavement elevations shall be established and controlled at the site of work by the Contractor in accordance with bench mark elevations furnished by the Contracting Officer.

1.9 SAMPLING AND TESTING

1.9.1 Aggregates

1.9.1.1 General: Samples of aggregates shall be furnished by the Contractor for approval of aggregate sources and stockpiles prior to the start of production and at times during production of the bituminous mixtures. Times and points of sampling will be designated by the Contracting Officer. Samples will be the basis of approval of specific sources or stockpiles of aggregates for aggregate requirements. Unless otherwise directed, ASTM D 75 shall be used in sampling coarse and fine aggregate, and ASTM C 183 shall be used in sampling mineral filler. All tests necessary to determine compliance with requirements specified herein will be made by the Government.

1.9.1.2 Sources: Sources of aggregates shall be selected well in advance of the time the materials are required in the work. If a previously developed source is selected, evidence shall be submitted 28 days before starting production, indicating that the central-plant hot-mix bituminous pavements constructed with the aggregates have had a satisfactory service record of at least five years under similar climatic and traffic conditions. The Contracting Officer will make such tests and other investigations as necessary to determine whether aggregates meeting requirements specified herein can be produced from proposed sources. If a sample of material from a new source fails to meet specification requirements, the material represented by the sample shall be replaced, and the cost of testing the replaced sample will be at the expense of the Contractor. Approval of the source of aggregate does not relieve the Contractor of responsibility for delivery at the jobsite of aggregates that meet the requirements specified herein.

1.9.2 Bituminous Materials: Samples of bituminous materials shall be obtained by the Contractor; sampling shall be in accordance with ASTM D 140. Tests necessary to determine conformance with requirements specified herein will be performed by the Government without cost to the Contractor.

Sources where bituminous materials are obtained shall be selected in advance of the time when materials will be required in the work. In addition to initial qualification testing of bituminous materials, samples shall be taken before and during construction when shipments of bituminous materials are received or when necessary to assure some condition of handling or storage has not been detrimental to the bituminous material. The samples will be taken by the Contractor and tested by the Contracting Officer.

1.9.3 Bituminous Mixtures: Sampling and testing of bituminous mixtures will be accomplished by the Contracting Officer.

1.10 DELIVERY, STORAGE, AND HANDLING OF MATERIALS

1.10.1 Mineral Aggregates: Mineral aggregates shall be delivered to the site of the bituminous mixing plant and stockpiled in such manner as to preclude fracturing of aggregate particles, segregation, contamination, or intermingling of different materials in the stockpiles or cold-feed hoppers. Mineral filler shall be delivered, stored, and introduced into the mixing plant in a manner to preclude exposure to moisture or other detrimental conditions.

1.10.2 Bituminous Materials: Bituminous materials shall be maintained at appropriate temperature during storage but shall not be heated by application of direct flame to walls of storage tanks or transfer lines. Storage tanks, transfer lines, and weigh buckets shall be thoroughly cleaned before a different type or grade of bitumen is introduced into the system. The asphalt cement shall be heated sufficiently to allow satisfactory pumping of the material; however, the storage temperature shall be maintained below 150 degrees C. (300 degrees F.)

1.11 ACCESS TO PLANT AND EQUIPMENT: The Contracting Officer shall have access at all times to all parts of the paving plant for checking adequacy of the equipment in use; inspecting operation of the plant; verifying weights, proportions, and character of materials; and checking temperatures maintained in preparation of the mixtures.

1.12 WAYBILLS AND DELIVERY TICKETS: Before the final statement is allowed, the Contractor shall file with the Contracting Officer certified waybills and certified delivery tickets for all aggregates and bituminous materials actually used in construction.

PART 2 PRODUCTS

2.1 BITUMINOUS HOT MIX: Shall consist of coarse aggregate, fine aggregate, mineral filler, bituminous material, and approved additives, if required, of the qualities and in the proportions specified and shall conform to the requirements contained in paragraphs PROPORTIONING OF MIXTURE and ACCEPTABILITY OF WORK.

2.1.1 Aggregates: Aggregates shall consist of crushed stone, crushed gravel, crushed slag, screening, sand, and mineral filler, as required. The portion of materials retained on the 4.75 mm (No. 4) sieve shall be known as coarse aggregate, the portion passing the 4.75 mm (No. 4) sieve and retained on the 0.075 millimeter (No. 200) sieve as fine aggregate, and the portion passing the 0.075 millimeter (No. 200) sieve as mineral filler. Aggregate gradation shall conform to gradation(s) specified in TABLE I. TABLE I is based on aggregates of uniform specific gravity; the percentage passing various sieves may be changed by the Contracting Officer when aggregates of varying specific gravities are used. Adjustments of percentage passing various sieves may be changed by the Contracting Officer when aggregates vary by more than 0.2 in specific gravity.

TABLE I. AGGREGATE GRADATION

Sieve Size	Wearing Course, Percent Passing	Intermediate Course, Percent Passing
3/4 inch	100%	100%

2.1.1.1 Coarse Aggregate

Coarse aggregate shall consist of clean, sound, durable particles meeting the following requirements.

a. Percentage of loss shall not exceed 40 after 500 revolutions, as determined in accordance with ASTM C 131.

b. Percentage of loss shall not exceed 50% after five cycles performed in accordance with ASTM C 88, using magnesium sulfate.

c. The dry weight of crushed slag shall not be less than 1200 kg/cubic m, (75 pcf,) as determined in accordance with ASTM C 29.

d. Crushed gravel retained on the 4.75 mm (No. 4) sieve and each coarser sieve shall contain at least 75 percent by weight of crushed pieces having one or more fractured faces with the area of each face equal to at least 75 percent of the smallest midsectional area of piece. When two fractures are contiguous, the angle between planes of fractures shall be at least 30 degrees to count as two fractured faces.

e. Particle shape of crushed aggregates shall be essentially cubical. The quantity of flat and elongated particles in any sieve size shall not exceed 20 percent by weight, when determined in accordance with ASTM D 4791.

2.1.1.2 Fine Aggregate: Fine aggregate shall consist of clean, sound, durable particles including natural sand or crushed stone, slag, or gravel that meets requirements for wear and soundness specified for coarse aggregate. Fine aggregate produced by crushing gravel shall have at least 90 percent by weight of crushed particles having two or more fractured faces in the portion retained on the 0.600 millimeter (No. 30) sieve. This requirement shall apply to the material before blending with natural sand when blending is necessary. Quantity of natural sand to be added to the wearing- and intermediate-course mixtures shall not exceed 25 percent by weight of coarse and fine aggregate and material passing the 0.075 millimeter (No. 200) sieve. Natural sand shall be clean and free from clay and organic matter. Percentage of loss shall not exceed 50% after five cycles of the soundness test performed in accordance with ASTM C 88, using magnesium sulfate.

2.1.1.3 Mineral Filler: Grain size shall be determined in accordance with ASTM D 422.

2.1.2 Bituminous Material: Asphalt cement shall conform to ASTM D 3381, Grade AR-2000.

2.1.3 Additives: The use of additives such as antistripping and antifoaming agents is subject to approval.

2.2 PROPORTIONING OF MIXTURE

2.2.1 Job Mix Formula: The JMF for the bituminous mixture will be furnished the Contractor by the Contracting Officer. The Contractor shall furnish samples of materials for mix design. Blending of the aggregates will be accomplished by the Government. No payment will be made for mixtures produced

prior to the approval of the JMF. The formula will indicate the percentage of each stockpile and mineral filler, the percentage of each size aggregate, the percentage of bitumen, and the temperature of the completed mixture when discharged from the mixer. Tolerances are given in TABLE II for asphalt content, temperature, and aggregate grading for tests conducted on the mix as discharged from the mixing plant; however, the final evaluation of aggregate gradation and asphalt content will be based on paragraph ACCEPTABILITY OF WORK. Bituminous mix that deviates more than 14 degrees C (25 degrees F) from the JMF shall be rejected. The JMF may be adjusted during construction to improve paving mixtures, as directed, without adjustments in the contract unit prices.

TABLE II. JOB-MIX TOLERANCES

Material	Tolerance, Plus or Minus
Aggregate passing No. 4 sieve or larger	5 percent
Aggregate passing Nos. 8, 16, 30, and 50 sieves	4 percent
Aggregate passing Nos. 100 and 200 sieves	2 percent
Bitumen	0.25 percent
Temperature of mixing	25 degrees F

2.2.2 Test Properties of Bituminous Mixtures: All samples will be compacted with 50 blows of specified hammer on each side of sample. When bituminous mixture fails to meet the requirements specified below, the paving operation shall be stopped until the cause of noncompliance is determined and corrected.

2.2.2.1 Stability, Flow, and Voids: Requirements for stability, flow, and voids are shown in TABLES III and IV for nonabsorptive and absorptive aggregates, respectively.

TABLE III. NONABSORPTIVE-AGGREGATE MIXTURE

	Intermediate Wearing Course	Course
Stability minimum, pounds	500	500
Flow maximum, 1/100-inch units	20	20
Voids total mix, percent (1)	3-5	4-6
Voids filled with bitumen, percent (2)	75-85	65-75

(1) The Contracting Officer may permit deviations from limits specified when gyratory method of design is used to develop the JMF.

(2) The Contracting Officer may permit deviation from limits specified for voids filled with bitumen in the intermediate course in order to stay within limits for percent voids total mix.

TABLE IV. ABSORPTIVE-AGGREGATE MIXTURE

	Intermediate Wearing Course	Course
Stability minimum, pounds	500	500
Flow maximum, 1/100-inch units	20	20
Voids total mix, percent (1)	2-4	3-5
Voids filled with bitumen, percent (2)	80-90	70-80

(1) The Contracting Officer may permit deviations from limits specified when gyratory method of design is used to develop the JMF.

(2) The Contracting Officer may permit deviation from limits specified for voids filled with bitumen in the intermediate course in order to stay within limits for percent voids total mix.

a. When the water-absorption value of the entire blend of aggregate does not exceed 2.5 percent as determined in accordance with ASTM C 127 and ASTM C 128, the aggregate is designated as nonabsorptive. The theoretical specific gravity computed from the apparent specific gravity or ASTM D 2041 will be used in computing voids total mix and voids filled with bitumen, and the mixture shall meet requirements in TABLE III.

b. When the water-absorption value of the entire blend of aggregate exceeds 2.5 percent as determined in accordance with ASTM C 127 and ASTM C 128, the aggregate is designated as absorptive. The theoretical specific gravity computed from the bulk-impregnated specific gravity method contained in ASTM D 2041 shall be used in computing percentages of voids total mix and voids filled with bitumen; the mixture shall meet requirements in TABLE IV.

2.2.2.2 Stability: The index of retained stability must be greater than 75 percent. When the index of retained stability is less than 75, the aggregate stripping tendencies may be countered by the use of hydrated lime or by treating the bitumen with an approved antistripping agent. The hydrated lime is considered as mineral filler and should be considered in the gradation requirements. The amount of hydrated lime or antistripping agent added to bitumen shall be sufficient, as approved, to produce an index of retained stability of not less than 75 percent. No additional payment will be made to the Contractor for addition of antistripping agent required.

PART 3 EXECUTION

3.1 BASE COURSE CONDITIONING: The surface of the base course will be inspected for adequate compaction and surface tolerances specified in Section 02546. Unsatisfactory areas shall be corrected.

3.2 PREPARATION OF BITUMINOUS MIXTURES: Rates of feed of aggregates shall be regulated so that the moisture content and temperature of aggregates will be within specified tolerances. Aggregates, mineral filler, and bitumen shall be conveyed into the mixer in proportionate quantities required to meet the JMF. Mixing time shall be as required to obtain a uniform coating of the aggregate with the bituminous material. Temperature of bitumen at time of mixing shall not exceed 150 degrees C. (300 degrees F.) Temperature of aggregate and mineral filler in the mixer shall not exceed 160 degrees C (325 degrees F) when bitumen is added. Overheated and carbonized mixtures or mixtures that foam shall not be used.

3.3 WATER CONTENT OF AGGREGATES: Drying operations shall reduce the water content of mixture to less than 0.75 percent. The water content test will be conducted in accordance with ASTM D

2216; the weight of the sample shall be at least 500 grams. If the water content is determined on hot bin samples, the water content will be a weighted average based on composition of blend.

3.4 STORAGE OF BITUMINOUS PAVING MIXTURE: Storage shall conform to the applicable requirements of ASTM D 3515; however, in no case shall the mixture be stored for more than 4 hours.

3.5 TRANSPORTATION OF BITUMINOUS MIXTURE: Transportation from paving plant to site shall be in trucks having tight, clean, smooth beds lightly coated with an approved releasing agent to prevent adhesion of the mixture to the truck bodies. Excessive releasing agent shall be drained prior to loading. Each load shall be covered with canvas or other approved material of ample size to protect mixture from weather and to prevent loss of heat. Loads that have crusts of cold, unworkable material or that have become wet will be rejected. Hauling over freshly placed material will not be permitted.

3.6 SURFACE PREPARATION OF UNDERLYING COURSE: Prior to placing of the intermediate or wearing course, the underlying course shall be cleaned of all foreign or objectionable matter with power brooms and hand brooms.

3.7 PRIME COATING: Surfaces of previously constructed base course shall be sprayed with a coat of bituminous material conforming to Section 02559 BITUMINOUS PRIME COAT.

3.8 TACK COATING: Contact surfaces of previously constructed pavement, curbs, manholes, and other structures shall be sprayed with a thin coat of bituminous material conforming to Section 02558 BITUMINOUS TACK COAT.

3.9 PLACING: Bituminous courses shall be constructed only when the base course or existing pavement has no free water on the surface. Bituminous mixtures shall not be placed without ample time to complete spreading and rolling during daylight hours, unless approved satisfactory artificial lighting is provided.

3.9.1 Offsetting Joints: The wearing course shall be placed so that longitudinal joints of the wearing course will be offset from joints in the intermediate course by at least 300 mm. (1 foot.) Transverse joints in the wearing course shall be offset by at least 600 mm (2 feet) from transverse joints in the intermediate course.

3.9.2 General Requirements for Use of Mechanical Spreader: Range of temperatures of mixtures, when dumped into the mechanical spreader, shall be as determined by the Contracting Officer. Mixtures having temperatures less than 110 degrees C (225 degrees F) when dumped into the mechanical spreader shall not be used. The mechanical spreader shall be adjusted and the speed regulated so that the surface of the course being laid will be smooth and continuous without tears and pulls, and of such depth that, when compacted, the surface will conform to the cross section indicated. Placing with respect to center line areas with crowned sections or high side of areas with one-way slope shall be as directed. Each lot of material placed shall conform to requirements specified in paragraph ACCEPTABILITY OF WORK. Placing of the mixture shall be as nearly continuous as possible, and speed of placing shall be adjusted, as directed, to permit proper rolling. When segregation occurs in the mixture during placing, the spreading operation shall be suspended until the cause is determined and corrected.

3.9.3 Placing Strips Succeeding Initial Strips: In placing each succeeding strip after initial strip has been spread and compacted as specified below, the screed of the mechanical spreader shall overlap the previously placed strip 50 to 75 mm (2 to 3 inches) and be sufficiently high so that compaction produces a smooth dense joint. Mixture placed on the edge of a previously placed strip by the mechanical spreader shall be pushed back to the edge of the strip by use of a lute. Excess mixture shall be removed and wasted.

3.9.4 Handspreading in Lieu of Machine Spreading: In areas where the use of machine spreading is impractical, the mixture shall be spread by hand. Spreading shall be in a manner to prevent segregation.

The mixture shall be spread uniformly with hot rakes in a loose layer of thickness that, when compacted, will conform to required grade, density, and thickness.

3.10 COMPACTION OF MIXTURE: Rolling shall begin as soon after placing as the mixture will bear a roller without undue displacement. Delays in rolling freshly spread mixture will not be permitted. After initial rolling, preliminary tests of crown, grade, and smoothness shall be made by the Contractor. Deficiencies shall be corrected so that the finished course will conform to requirements for grade and smoothness specified herein. Crown, grade, and smoothness will be checked in each lot of completed pavement by the Contracting Officer for compliance and will be evaluated as specified in paragraph ACCEPTABILITY OF WORK. After the Contractor is assured of meeting crown, grade, and smoothness requirements, rolling shall be continued until a mat density of 97.0 to 100.0 percent and a joint density of 95.0 to 100.0 percent of density of laboratory-compacted specimens of the same mixture is obtained. The density will be determined and evaluated as specified in paragraph ACCEPTABILITY OF WORK. Places inaccessible to rollers shall be thoroughly compacted with hot hand tampers.

3.10.1 Testing of Mixture: At the start of the plant operation, a quantity of mixture shall be prepared that is sufficient to construct a test section at least 15 m (50 feet) long, two spreader widths wide and of thickness to be used in the project. Mixture shall be placed, spread, and rolled with equipment to be used in the project and in accordance with the requirements specified above. This test section shall be tested and evaluated as a lot and shall conform to all specified requirements. If test results are satisfactory, the test section shall remain in place as part of the completed pavement. If tests indicate that the pavement does not conform to specification requirements, necessary adjustments to plant operations and rolling procedures shall be made immediately, and test section will be evaluated as specified in paragraph ACCEPTABILITY OF WORK. Additional test sections, as directed, shall be constructed and sampled for conformance to specification requirements. In no case shall the Contractor start full production of an intermediate or wearing course mixture without approval.

3.10.2 Correcting Deficient Areas: Mixtures that become contaminated or are defective shall be removed to the full thickness of the course. Edges of the area to be removed shall be cut so that sides are perpendicular and parallel to the direction of traffic and so that the edges are vertical. Edges shall be sprayed with bituminous materials conforming to Section 02558 BITUMINOUS TACK COAT. Fresh paving mixture shall be placed in the excavated areas in sufficient quantity so that the finished surface will conform to grade and smoothness requirements. Paving mixture shall be compacted to the density specified herein. Skin patching of an area that has been rolled shall not be permitted.

3.11 JOINTS

3.11.1 General: Joints between old and new pavements, between successive work days, or joints that have become cold (less than 80 degrees C (175 degrees F)) shall be made to insure continuous bond between the old and new sections of the course. All joints shall have the same texture and smoothness as other sections of the course. Contact surfaces of previously constructed pavements coated by dust, sand, or other objectionable material shall be cleaned by brushing or shall be cut back as directed. When directed by the Contracting Officer, the surface against which new material is placed shall be sprayed with a thin, uniform coat of bituminous material conforming to Section 02558 BITUMINOUS TACK COAT. Material shall be applied far enough in advance of placement of a fresh mixture to insure adequate curing. Care shall be taken to prevent damage or contamination of the sprayed surface.

3.11.2 Transverse Joints: The roller shall pass over the unprotected end of a strip of freshly placed material only when placing is discontinued or delivery of the mixture is interrupted to the extent that the material in place may become cold. In all cases, prior to continuing placement, the edge of previously placed pavement shall be cut back to expose an even vertical surface for full thickness of the course. In continuing placement of a strip, the mechanical spreader shall be positioned on the transverse joint so that sufficient hot mixture will be spread to obtain a joint after rolling that conforms to the required density and smoothness specified herein.

3.11.3 Longitudinal Joints: Edges of a previously placed strip shall be prepared such that the pavement in and immediately adjacent to the joint between this strip and the succeeding strip meets the requirements for grade, smoothness, and density specified in paragraph ACCEPTABILITY OF WORK.

3.12 ACCEPTABILITY OF WORK

3.12.1 General: A lot shall be that quantity of construction that will be evaluated for compliance with specification requirements. The Government will conduct all initial acceptance tests. Additional tests required to determine acceptability of nonconforming material will be preformed by the Government at the expense of the Contractor.

3.12.1.1 Lot Evaluation: In order to evaluate aggregate gradation, asphalt content, and density, each lot shall be divided into four equal sublots. For density determination, one random sample shall be taken from the mat, and one random sample shall be taken from the joint of each sublot. A coring machine will be used for taking mat and joint samples from the completed pavement. Core samples will be taken with the coring machine centered over the joint. After air drying to a constant weight, random samples obtained from the mat shall be used for density determination in accordance with ASTM D 2172. Samples for determining asphalt content and aggregate gradation shall be taken from loaded trucks within each sublot. Asphalt content shall be determined in accordance with ASTM D 2172, Method A or B. Aggregate gradation shall be determined for the mix by testing the recovered aggregate in accordance with ASTM C 136 and ASTM C 117.

3.12.1.2 Lot Failure: When a lot of material fails to meet the specification requirements, that lot shall be removed and replaced or accepted at a reduced price. The lowest percent payment for any pavement characteristic (i.e., gradation, asphalt content, density, grade, and smoothness) defined below shall be the percent payment for that lot. The percent payment is based on the pavement characteristics and the contract unit price.

3.12.1.3 Optional Sampling and Testing

The Contracting Officer reserves the right to sample and test any area which appears to deviate from the specification requirements. Testing in these areas will be in addition to the lot testing, and the requirements for these areas will be the same as those for a lot.

3.12.2 Aggregate Gradation

The mean absolute deviation of the four sublot aggregate gradations from the JMF for each sieve size will be evaluated and compared with TABLE V. The percent payment based on aggregate gradation shall be the lowest value determined for any sieve size in TABLE V. All tests for aggregate gradation will be completed and reported within 24 hours after completion of construction of each lot. The computation of mean absolute deviation for one sieve size is illustrated below:

Example: Assume the following JMF and sublot test results for aggregate gradation

Sieve Size	Percent by Weight Passing Sieves JMF	Test No. 1	Test No. 2	Test No. 3	Test No. 4
3/4 inch	100	100	100	100	100
1/2 inch	88	87	88	90	88
3/8 inch	75	72	77	78	74
No. 4	64	60	65	67	62
No. 8	53	50	56	57	52
No. 16	42	39	44	45	41
No. 30	32	30	34	35	32
No. 50	20	17	20	22	21
No. 100	10	8	10	10	11
No. 200	6	4	7	8	6

Mean Absolute Deviation (for 75 micrometer (No. 200) sieve) = ((Absolute value of 4-6) + (Absolute value of 7-6) + (Absolute value of 8-6) + (Absolute value of 6-6))/4 = (2 + 1 + 2 + 0)/4 = 1.25

The mean absolute deviation for other sieve sizes can be determined in a similar way for this example to be:

Sieve Size	3/4 inch	1/2 inch	3/8 inch	No. 4	No. 8	No. 16	No. 30	No. 50	No. 100
Mean Absolute Deviation	0	0.75	2.25	2.50	2.75	2.25	1.75	1.50	0.75

The least percent payment based on any sieve size listed in TABLE V would be 98 percent for the 75 micrometer (No. 200) sieve. Therefore for this example the percent payment based on aggregate gradation is 98 percent.

TABLE V. PERCENT PAYMENT BASED ON MEAN ABSOLUTE DEVIATION OF AGGREGATE GRADATIONS FROM JMF

Sieve Size	Percent Payment Based On Mean Absolute Deviation from JMF 0.0-1.0	1.1-2.0	2.1-3.0	3.1-4.0	4.1-5.0	5.1-6.0	Above 6.0
3/4 inch	100	100	100	100	98	95	90
1/2 inch	100	100	100	100	98	95	90
3/8 inch	100	100	100	100	98	95	90
No. 4	100	100	100	100	98	95	90
No. 8	100	100	100	98	95	90	reject
No. 16	100	100	100	98	95	90	reject
No. 30	100	100	100	98	95	90	reject
No. 50	100	100	100	98	95	90	reject
No. 100	100	98	95	90	90	reject	reject
No. 200	100	98	90	reject	reject	reject	reject

3.12.3 Asphalt Content: The mean absolute deviation of the four asphalt contents from the JMF will be evaluated and compared with TABLE VI. The percent payment based on asphalt content shall be the value determined in TABLE VI. Asphalt content tests shall be completed and reported within 24 hours after construction of the lot.

TABLE VI. PERCENT PAYMENT BASED ON ASPHALT CONTENT

Mean Absolute Deviation of Extracted Asphalt Content from JMF	Percent Payment
less than 0.25	100
0.25-0.30	98
0.31-0.35	95
0.36-0.40	90
above 0.40	reject

3.12.4 Density: The average mat and joint densities will be expressed as a percentage of the laboratory density. The laboratory density for each lot will be determined in accordance with ASTM D 2041 from four sets of laboratory samples. One sample will be obtained from each of the four sublots and will be divided into three specimens to produce one set of laboratory samples. Laboratory samples will be prepared from asphalt mixture which has not been reheated. Samples will be compacted at 121.1 degrees C (250 degrees F) within 2 hours of the time the mixture was prepared at the asphalt plant. Laboratory samples will be prepared in accordance with ASTM D 2041.

3.12.4.1 Field Density: The field density will be determined and compared with TABLE VII. The percent payment based on density shall be the lowest value determined from TABLE VII. The percent payment based on mat density will be for all of the material placed in the lot. The percent payment based on joint density will be for the amount of material represented by an area equal to the lot joint length by 3 m (10 feet) wide not to exceed the lot size.

TABLE VII. PERCENT PAYMENT BASED ON DENSITY

Average Mat (4 Cores)	Density Payment	Percent	Average Joint Density (4 Cores)
97.0-100.0	100.0		95.0-100.0
96.9	100.0		94.9
96.8-100.1	99.9		94.8
96.7	99.8		94.7
96.6-100.2	99.6		94.6
96.	99.4		94.5
96.4-100.3	99.1		94.4
96.3	98.7		94.3
96.2-100.4	98.3		94.2
96.1	97.8		94.1
96.0-100.5	97.3		94.0
95.9	96.3		93.9
95.8-100.6	94.1		93.8
95.7	92.2		93.7
95.6-100.7	90.3		93.6
95.5	87.9		93.5
95.4-100.8	85.7		93.4
95.3	83.3		93.3
95.2-100.9	80.6		93.2
95.1	78.0		93.1
95.0-101.0	75.0		93.0
below 95.0, above 101.0	reject		below 93.0

3.12.4.2 Lot Density: All density results on a lot will be completed and reported within 24 hours after construction of that lot. When the Contracting Officer considers it necessary to take additional samples for density measurements, samples will be taken in groups of four (one for each sublot). The percent payment will be determined for each additional group of four samples and averaged with the percent payment for the original group to determine the final percent payment. The Contractor shall fill all sample holes with hot mix and compact.

3.12.5 Grade: Grade-conformance tests will be conducted by the Government. The finished surface of the pavement will be tested for conformance with plan-grade requirements. Within 5 working days after completion of placement of a particular lot, the Contracting Officer will inform the Contractor in writing of results of grade-conformance tests. The finished grade of each pavement area shall be determined by running lines of levels at intervals of 8 m (25 feet) or less longitudinally and transversely to determine the elevation of the completed pavement. When more than 5 percent of all measurements made within a lot are outside the tolerances specified in paragraph GRADE AND SURFACE-SMOOTHNESS REQUIREMENTS, the payment for that lot will not exceed 95 percent of the bid price. In areas where the grade exceeds the plan-grade tolerances given in paragraph GRADE AND SURFACE-SMOOTHNESS REQUIREMENTS by more than 50 percent, the Contractor shall remove the deficient area and replace with fresh paving mixture at no additional cost to the Government. Sufficient material shall be removed to allow at least 1 inch of asphalt concrete to be placed. Skin patching for correcting low areas or planing for correcting high areas shall not be permitted.

3.12.6 Surface Smoothness: After completion of final rolling of a lot, the compacted surface will be tested by the Contracting Officer with a 3.66 m (12-foot) (12-foot) straightedge. Measurements will be made

perpendicular to and across all mats at distances along the mat not to exceed 8 m. (25 feet.) Location and deviation from straightedge of all measurements will be recorded. When more than 5 percent of all measurements along the mat within a lot exceed the specified tolerance, the unit price for that lot shall not exceed 95 percent of the bid price. Any joint or mat area surface deviation which exceeds the tolerance given in paragraph GRADE AND SURFACE-SMOOTHNESS REQUIREMENTS by more than 50 percent shall be corrected to meet the specification requirements. The Contractor shall remove the deficient area and replace with fresh paving mixture at no additional cost to the Government. Sufficient material shall be removed to allow at least 25 mm (1 inch) of asphalt concrete to be placed. Skin patching for correcting low areas or planing for correcting high areas shall not be permitted.

-- End of Section --

INDEX

SECTION 02558

BITUMINOUS TACK COAT

Paragraph		Page
1.1	REFERENCES	02558-1
1.2	MEASUREMENT AND PAYMENT	02558-1
1.3	SUBMITTALS	02558-1
1.4	PLANT, EQUIPMENT, MACHINES, AND TOOLS	02558-1
1.5	WEATHER LIMITATIONS	02558-2
1.6	WAYBILLS AND DELIVERY TICKETS	02558-2
2.1	BITUMINOUS MATERIAL	02558-2
3.1	PREPARATION OF SURFACE	02558-3
3.2	APPLICATION RATE	02558-3
3.3	APPLICATION TEMPERATURE	02558-3
3.4	APPLICATION	02558-4
3.5	FIELD QUALITY CONTROL	02558-4
3.6	SAMPLING AND TESTING	02558-4

SECTION 02558

BITUMINOUS TACK COAT

PART 1 GENERAL

1.1 REFERENCES: The publications listed below form a part of this specification to the extent referenced. The publications are referred to in the text by basic designation only.

AMERICAN SOCIETY OF TESTING AND MATERIALS (ASTM)

ASTM D 140	(1993) Sampling Bituminous Materials
ASTM D 946	(1982; R 1993) Penetration-Graded Asphalt Cement for Use in Pavement Construction
ASTM D 977	(1991) Emulsified Asphalt
ASTM D 2995	(1993) Determining Application Rate of Bituminous Distributors
ASTM D 3381	(1992) Viscosity-Graded Asphalt Cement for Use in Pavement Construction

1.2 MEASUREMENT AND PAYMENT: The bituminous material paid for will be as outlined in the Contractor's bid schedule used in the accepted work provided that the measured quantities shown in the said schedule are not 10 percent over the specified application rate. Any amount of bituminous material more than 10 percent over the specified application rate for each application will be deducted from the measured quantities except for irregular areas where hand spraying of the bituminous material is necessary. Measured quantities shall be expressed in metric tons (gallons at 60 degrees F).

Payment shall constitute full compensation for all operations necessary to complete the work as specified herein.

1.3 SUBMITTALS: Government approval is required for submittals with a "GA" designation; submittals having an "FIO" designation are for information only. The following shall be submitted in accordance with Section 01300 SUBMITTAL PROCEDURES:

a. Copies of all test results, within 24 hours of completion of tests. Certified copies of the manufacturer's test reports indicating compliance with applicable specified requirements, not less than 28 days before the material is required in the work.

b. Waybills and delivery tickets, during progress of the work. Before the final statement is allowed, certified waybills and certified delivery tickets for all bituminous material used in the construction of the pavement covered by the contract shall be filed.

1.4 PLANT, EQUIPMENT, MACHINES AND TOOLS

1.4.1 General Requirements: All plant, equipment, machines and tools used in the work shall be subject to approval and shall be maintained in a satisfactory working condition at all times.

1.4.2 Bituminous Distributor: The distributor shall have pneumatic tires of such size and number to prevent rutting, shoving or otherwise damaging the base surface or other layers in the pavement structure. The distributor shall be designed and equipped to spray the bituminous material in a uniform coverage at the specified temperature, at readily determined and controlled rates with an allowable variation from the

specified rate of not more than plus or minus 5 percent, and at variable widths. Distributor equipment shall include a separate power unit for the bitumen pump, full-circulation spray bars, tachometer, pressure gauges, volume-measuring devices, adequate heaters for heating of materials to the proper application temperature, a thermometer for reading the temperature of tank contents, and a hand hose attachment suitable for applying bituminous material manually to areas inaccessible to the distributor. The distributor shall be equipped to circulate and agitate the bituminous material during the heating process.

1.4.3 Power Brooms and Power Blowers: Power brooms and power blowers shall be suitable for cleaning the surfaces to which the tack coat is to be applied.

1.5 WEATHER LIMITATIONS: Tack coat shall be applied only when the surface to receive the tack coat is dry. Tack coat shall be applied only when the atmospheric temperature in the shade is 10 degrees C (50 degrees F) or above and when the temperature has not been below 2 degrees C (35 degrees F) for the 12 hours prior to application.

1.6 WAYBILLS AND DELIVERY TICKETS: The Contractor shall not remove bituminous material from storage until the initial outage and temperature measurements have been taken. The delivery or storage units will not be released until the final outage has been taken.

PART 2 PRODUCTS

2.1 BITUMINOUS MATERIAL

a. Cutback asphalt grades recommended for tack are RC-70 and RC-250. They may be used generally as a tack in pavement construction. In cold-weather construction, they can be used with less concern than emulsions which contain water.

b. Paving grade asphalts can also be used in tack applications. More heat is required to achieve spraying consistency for these materials. Selection of a grade involves consideration of the various grading systems used. The following materials are recommended:

Penetration Grades (ASTM D 946)
200-300
120-150
85-100

Viscosity Grades (ASTM D 3381)
AC 2.5
AC 5
AC 10

Aged Residue Viscosity Grades (ASTM D 3381)
AR 1000
AR 2000
AR 4000

The harder grades, 85-100 penetration, AC 10, and AR 4000 viscosity grades, are recommended for airfields. These grades are harder and would be better able to resist uplift pressures causes by jet engines. The other grades may be considered for more general use. The temperature-viscosity relation for the job asphalt should be checked to ensure that a spraying consistency can be achieved in the recommended temperature range of in paragraph APPLICATION TEMPERATURE.

c. Either anionic or cationic emulsions can be used For tack. A list of recommended emulsions is as follows:

Anionic Emulsion ASTM D 977

RS-1
MS-1
HFMS-1
SS-1
SS-1h

Cationic Emulsions ASTM D 2397

CRS-1
CSS-1
CSS-1h

Grades SS-1h and CSS-1h are made with a harder base asphalt and are recommended for airfields. The other grades can be considered for general use. Grades RS-1, SS-1, and SS-1h are widely used tack materials.

d. An asphalt-based tack or tar tack may be used between an asphalt and tar or tar-rubber concrete course, but a tar tack should be used between tar and tar-rubber concrete courses.

Emulsified asphalt shall conform to ASTM D 977, Grade SS-1.

PART 3 EXECUTION

3.1 PREPARATION OF SURFACE: Immediately before applying the tack coat all loose material, dirt, clay, or other objectionable material shall be removed from the surface to be treated. The area to be tacked shall also be dry and clean.

3.2 APPLICATION RATE: Bituminous material for the tack coat shall be applied in quantities of not less than 0.20 liter (0.05 gallon) nor more than 0.70 liter per square meter (0.15 gallon per square yard) of pavement surface. The exact quantities within the range specified, which may be varied to suit field conditions, will be determined by the Contracting Officer.

3.3 APPLICATION TEMPERATURE: Tar application temperatures shall be within the following ranges as directed:

Liquid Asphalts

RC-70	120-200 degrees F
RC-250	165-250 degrees F

Paving Grade Asphalts

Penetration Grades

200-300	plus 265 degrees F
120-150	plus 270 degrees F
85-100	plus 280 degrees F

Viscosity Grades

AC 2.5	plus 270 degrees F
AC 5	plus 280 degrees F
AC 10	plus 280 degrees F
AR 1000	plus 275 degrees F
AR 2000	plus 285 degrees F
AR 4000	plus 290 degrees F

Emulsions

MS-1	70-160 degrees F
SS-1	70-160 degrees F
SS-1h	70-160 degrees F
CSS-1	70-160 degrees F
CSS-1h	70-160 degrees F

* These temperature ranges exceed the flash point of the material and care should be taken in their heating.

3.4 APPLICATION: Following preparation and subsequent inspection of the surface, the tack coat shall be applied at the specified rate with uniform distribution over the surface to be treated. All areas and spots missed by the distributor shall be properly treated with the hand spray. Following application of the tack material and prior to application of the succeeding layer of pavement, the tack shall be allowed to cure and to obtain evaporation of any volatiles or moisture. Until the succeeding layer of pavement is placed, the tacked area shall be maintained by protecting the surface against damage and by repairing and retacking deficient areas at no additional cost to the Government. If required, clean dry sand shall be spread to effectively blot up any excess bituminous material. No smoking, fires, or flames other than the heaters that are a part of the equipment shall be permitted within 8 meters (25 feet) of heating, distributing, and transferring operations of bituminous material other than bituminous emulsions.

3.5 FIELD QUALITY CONTROL: Samples of the bituminous material used will be obtained by the Contractor as directed, under the supervision of the Contracting Officer. The sample will be retained and tested by the Government at no cost to the Contractor.

3.6 SAMPLING AND TESTING

3.6.1 General Requirements: Sampling and testing shall be performed by an approved commercial testing laboratory or by facilities furnished by the Contractor. No work requiring testing will be permitted until the facilities have been inspected and approved.

3.6.2 Sampling: The samples of bituminous material, unless otherwise specified, shall be in accordance with ASTM D 140.

3.6.3 Initial Sampling and Testing

3.6.3.1 Bituminous Materials: Sources from which bituminous materials are to be obtained shall be selected and notification thereof furnished the Contracting Officer within 15 days after the award of the contract.

3.6.3.2 Calibration Test: The Contractor shall furnish all equipment, materials, and labor necessary to calibrate the bituminous distributor. Calibration shall be made with the approved job material and prior to applying the tack coat material to the prepared surface. Calibration of the bituminous distributor shall be in accordance with ASTM D 2995.

3.6.4 Sampling and Testing During Construction: Quality control sampling and testing shall be performed as required in paragraph FIELD QUALITY CONTROL.

-- End of Section --

INDEX

SECTION 02559

BITUMINOUS PRIME COAT

Paragraph		Page
1.1	REFERENCES	02559-1
1.2	WAYBILLS AND DELIVERY TICKETS	02559-1
1.3	MEASUREMENT	02559-1
1.4	PAYMENT	02559-1
1.5	SUBMITTALS	02559-2
1.6	PLANT, EQUIPMENT, MACHINES, AND TOOLS	02559-2
1.7	WEATHER LIMITATIONS	02559-2
2.1	BITUMINOUS MATERIAL	02559-2
3.1	PREPARATION OF SURFACE	02559-2
3.2	PRIME COATING	02559-3
3.3	FIELD QUALITY CONTROL	02559-3
3.4	SAMPLING AND TESTING	02559-3

SECTION 02559

BITUMINOUS PRIME COAT

PART 1 GENERAL

1.1 REFERENCES: The publications listed below form a part of this specification to the extent referenced. The publications are referred to in the text by basic designation only.

AMERICAN ASSOCIATION OF STATE HIGHWAY AND TRANSPORTATION OFFICIALS (AASHTO)

AASHTO M 82 (1975; Rev 1986) Cut-Back Asphalt (Medium-Curing Type)

AASHTO T 40 (1978; Rev 1986) Sampling Bituminous Materials

AMERICAN SOCIETY FOR TESTING AND MATERIALS (ASTM)

ASTM D 140 (1993) Sampling Bituminous Materials

ASTM D 490 (1992) Road Tar

ASTM D 633 (1987; R 1991) Volume Correction Table for Road Tar

ASTM D 977 (1991) Emulsified Asphalt

ASTM D 1250 (1980; R 1990) Petroleum Measurement Tables

ASTM D 2026 (1972; R 1993) Cutback Asphalt (Slow-Curing Type)

ASTM D 2027 (1976; R 1992) Cutback Asphalt (Medium-Curing Type)

ASTM D 2397 (1991) Cationic Emulsified Asphalt

ASTM D 2995 (1993) Determining Application Rate of Bituminous Distributors

1.2 WAYBILLS AND DELIVERY TICKETS: Before the final statement is allowed, the Contractor shall file with the Contracting Officer certified waybills and certified delivery tickets for all bituminous materials used in the construction of the pavement covered by the contract. The Contractor shall not remove bituminous material from storage until the initial outage and temperature measurements have been taken. The delivery or storage units will not be released until the final outage has been taken.

1.3 MEASUREMENT: The bituminous material to be paid for will be in accordance the measured quantities shown in the Contractor's bid schedule provided the measured quantities are not 10 percent over the specified application rate. Any amount of bituminous material more than 10 percent over the specified application rate for each application will be deducted from the measured quantities except for irregular areas where hand spraying of the bituminous material is necessary. Measured quantities shall be expressed in metric tons (2000 pound tons). Volumes measured at temperatures other than 60 degrees F shall be corrected in accordance with ASTM D 633 for tar.

1.4 PAYMENT: The quantities of bituminous material, determined as specified in paragraph MEASUREMENT will be paid for as indicated in the Contractor's bid schedule. Payment shall constitute full compensation for all operations necessary to complete the work as specified herein.

1.5 SUBMITTALS: Government approval is required for submittals with a "GA" designation; submittals having an "FIO" designation are for information only. The following shall be submitted in accordance with Section 01300 SUBMITTAL PROCEDURES:

a. Copies of test results, within 24 hours of completion of tests. Sampling and testing shall be performed by an approved commercial testing laboratory or by facilities furnished by the Contractor.

b. Waybills and delivery tickets, during progress of the work.

1.6 PLANT, EQUIPMENT, MACHINES AND TOOLS

1.6.1 General Requirements: All plant, equipment, machines and tools used in the work shall be subject to approval and shall be maintained in a satisfactory working condition at all times. The equipment shall be adequate and shall have the capability of producing the results specified.

1.6.2 Bituminous Distributor: The distributor shall have pneumatic tires of such size and number to prevent rutting, shoving, or otherwise damaging the base surface or other layers in the pavement structure. It shall be designed and equipped to spray the bituminous material in a uniform double or triple lap at the specified temperature, at readily determined and controlled rates with an allowable variation from the specified rate of not more than plus or minus 5 percent, and at variable widths. Distributor equipment shall include a separate power unit for the bitumen pump, full-circulation spray bars, tachometer, pressure gauges, volume-measuring devices, adequate heaters for heating of materials to the proper application temperature, a thermometer for reading the temperature of tank contents, and a hand hose attachment suitable for applying bituminous material manually to areas inaccessible to the distributor. The distributor shall be equipped to circulate and agitate the bituminous material during the heating process.

1.6.3 Power Brooms and Power Blowers: Power brooms and power blowers shall be suitable for cleaning the surfaces to which the prime coat is to be applied.

1.6.4 Storage Tanks: Tanks shall be capable of heating the bituminous material, under effective and positive control at all times, to the required temperature. Heating shall be accomplished by steam coils, hot oil, or electricity. An armored thermometer shall be affixed to the tank so that the temperature of the bituminous material may be read at all times.

1.7 WEATHER LIMITATIONS: The prime coat shall be applied only when the subgrade, subbase, or base course is dry enough to promote uniform coverage and the desired penetration into the treated surface. The prime coat shall be applied only when the atmospheric temperature in the shade is 10 degrees C (50 degrees F) or above and when the temperature has not been below 2 degrees C (35 degrees F) for the 12 hours prior to the application.

PART 2 PRODUCTS

2.1 BITUMINOUS MATERIAL: Emulsified asphalt shall conform to ASTM D 490, ASTM D 977, ASTM D 2026, ASTM D 2027, ASTM D 2397, or AASHTO M 81, AASHTO M 82, Grade MC-70.

PART 3 EXECUTION

3.1 PREPARATION OF SURFACE: Immediately before applying the prime coat, all loose material, dirt, clay, or other objectionable material shall be removed from the surface to be treated. To assure a uniform spread of the bituminous material, the portion of the subgrade, subbase, or base course prepared for treatment, if excessively dry, shall be lightly sprinkled with water immediately before the application, as directed.

3.2 PRIME COATING: Bituminous material for the prime coat shall be applied in quantities of not less than 0.70 liter (0.15 gallon) nor more than 1.80 liters per square meter (0.40 gallon per square yard) of pavement surface. The exact quantities within the range specified, which may be varied to suit field conditions, will be determined by the Contracting Officer.

3.2.2 Application Temperature

NORMAL SPRAY APPLICATION TEMPERATURES FOR

Cutback Asphalts

SC-70	120-225 degrees F
SC-250	165-270 degrees F
MC-30	85-190 degrees F
MC-70	120-225 degrees F
MC-250	165-270 degrees F
RC-70	120-225 degrees F
RC-250	165-270 degrees F

These temperature ranges include or exceed the flash point of the material, and care should be taken in their heating.

3.2.3 Application: Following preparation and subsequent inspection of the surface, the prime coat shall be applied at the specified rate with uniform distribution over the surface to be treated. To obtain uniform application of the prime coat on the surface treated at the junction of previous and subsequent applications, building paper shall be spread on the surface for a sufficient distance back from the ends of each application so that the prime coat may be started and stopped on the paper. Immediately after application, the building paper shall be removed and destroyed. All areas and spots missed by the distributor shall be properly treated with the hand spray. Following application of the prime material, the surface shall be allowed to cure without being disturbed for a period of at least 48 hours or longer, as may be necessary to attain penetration into the treated course and evaporation of the volatiles from prime material. As directed, sand shall be spread to effectively blot up and cure any excess bituminous material. Until the succeeding layer of pavement is placed, the primed surface shall be maintained by protecting the surface against damage and by repairing and repriming deficient areas at no additional cost to the Government. No smoking, fire, or flames other than the heaters that are a part of the equipment shall be permitted within 8 meters (25 feet) heating, distributing, or transferring operation for bituminous materials other than emulsions. Full-face organic vapor-type respirator and protective creams shall be used by personnel exposed to tar fumes. Protective creams shall not be used as a substitute for cover clothing.

3.3 FIELD QUALITY CONTROL: Samples of the bituminous material will be tested for compliance with the applicable specified requirements. [A sample shall be obtained and tested by the Contractor for every 25 metric ton (tons) of bituminous material used. Samples of the bituminous material used will be obtained by the Contractor as directed, under the supervision of the Contracting Officer. The sample will be retained and tested by the Government at no cost to the Contractor.

3.4 SAMPLING AND TESTING

3.4.1 General Requirements: No work requiring testing will be permitted until the facilities have been inspected and approved. The first test will be at the expense of the Government. Costs incurred for subsequent inspections will be charged to the Contractor.

3.4.2 Sampling: The samples of bituminous material, unless otherwise specified, shall be taken in accordance with ASTM D 140 or AASHTO T 40.

3.4.3 Initial Sampling and Testing

3.4.3.1 Bituminous Materials: Sources from which bituminous materials are to be obtained shall be selected and notification thereof furnished the Contracting Officer within 15 days after the award of the contract. Certified copies of the manufacturer's test reports indicating compliance with applicable specified requirements shall be submitted to the Contracting Officer not less than 30 days before the material is required in the work.

3.4.3.2 Calibration Test: The Contractor shall furnish all equipment, materials, and labor necessary to calibrate the bituminous distributor. Calibration shall be made with the approved job material and prior to applying the prime coat material to the prepared surface. Calibration of the bituminous distributor shall be in accordance with ASTM D 2995.

3.4.4 Sampling and Testing During Construction: Quality control sampling and testing shall be performed as required in paragraph FIELD QUALITY CONTROL.

-- End of Section --

INDEX

SECTION 02560

BITUMINOUS SEAL COAT, SPRAY APPLICATION

Paragraph		Page
1.1	REFERENCES	02560-1
1.2	MEASUREMENT	02560-2
1.3	PAYMENT	02560-2
1.4	SUBMITTALS	02560-2
1.5	EQUIPMENT	02560-2
1.6	WEATHER LIMITATIONS	02560-3
2.1	BITUMINOUS MATERIAL	02560-3
2.2	MINERAL AGGREGATE	02560-3
2.3	ANTISTRIPPING AGENT	02560-4
3.1	PREPARATION OF SURFACE	02560-4
3.2	BITUMINOUS MATERIAL	02560-4
3.3	AGGREGATE	02560-5
3.4	ROLLING AND BROOMING	02560-5
3.5	FIELD QUALITY CONTROL	02560-5
3.6	SAMPLING AND TESTING	02560-5
3.7	TRAFFIC CONTROL	02560-6

SECTION 02560

BITUMINOUS SEAL COAT, SPRAY APPLICATION

PART 1 GENERAL

1.1 REFERENCES: The publications listed below form a part of this specification to the extent referenced. The publications are referred to in the text by basic designation only.

AMERICAN ASSOCIATION OF STATE HIGHWAY AND TRANSPORTATION OFFICIALS (AASHTO)

AASHTO M 20	(1970; Rev 1986) Penetration Graded Asphalt Cement
AASHTO M 82	(1975; Rev 1986) Cut-back Asphalt (Medium-Curing Type)
AASHTO M 226	(1980; Rev 1986) Viscosity Graded Asphalt Cement
AASHTO T 40	(1978; Rev 1986) Sampling Bituminous Materials

AMERICAN SOCIETY FOR TESTING AND MATERIALS (ASTM)

ASTM C 29	(1991a) Unit Weight and Voids in Aggregate
ASTM C 136	(1993) Sieve Analysis of Fine and Coarse Aggregates
ASTM C 142	(1978; R 1990) Clay Lumps and Friable Particles in Aggregates
ASTM D 75	(1987; R 1992) Sampling Aggregates
ASTM D 140	(1993) Sampling Bituminous Materials
ASTM D 490	(1992) Road Tar
ASTM D 633	(1987; R 1991) Volume Correction Table for Road Tar
ASTM D 946	(1982; R 1993) Penetration-Graded Asphalt Cement for Use in Pavement Construction
ASTM D 977	(1991) Emulsified Asphalt
ASTM D 1250	(1980; R 1990) Petroleum Measurement Tables
ASTM D 2027	(1976; R 1992) Cutback Asphalt (Medium-Curing Type)
ASTM D 2397	(1991) Cationic Emulsified Asphalt
ASTM D 2995	(1993) Determining Application Rate of Bituminous Distributors
ASTM D 3381	(1992) Viscosity-Graded Asphalt Cement for Use in Pavement Construction

1.2 MEASUREMENT: The bituminous material and aggregate to be paid for shall be in accordance with the Contractor's bid schedule.

1.2.1 Bituminous Material: The amount of bituminous material to be paid for will be measured in metric tons (tons, 2000-pound). Volumes measured at temperatures other than 15.6 degrees C (60 degrees F) shall be corrected in accordance with ASTM D 633.

1.2.2 Aggregate: The amount of aggregate to be paid for will be measured in cubic meters (cubic yards) of dry aggregate. Measurement of the materials shall be by approved weigh scales.

1.3 PAYMENT: The quantities of aggregate and bituminous material, determined as specified in paragraph MEASUREMENT FOR PAYMENT, will be paid for as shown in the Contractor's bid schedule. Payment shall constitute full compensation for all operations necessary to complete the work as specified herein.

1.4 SUBMITTALS: Government approval is required for submittals with a "GA" designation; submittals having an "FIO" designation are for information only. The following shall be submitted in accordance with Section 01300 SUBMITTAL PROCEDURES:

a. Copies of the test results, within 24 hours of the completion of the test. Certified copies of the aggregate test results, not less than 30 days before the material is required in the work. Certified copies of the bituminous materials test reports indicating compliance with applicable specified requirements, not less than 30 days before the material is required in the work. A copy of the calibration test results, before the bituminous distributor and aggregate spreader are used on the job.

b. Waybills and delivery tickets, during the progress of the work. Before the final statement is allowed, certified waybills and delivery tickets for all materials used in the work covered by this section shall be filed.

1.5 EQUIPMENT

1.5.1 General Requirements: Equipment, plant and tools used in the work shall be subject to approval and shall be maintained in a satisfactory working condition at all times. The equipment shall be adequate and shall have the capability of producing the results specified.

1.5.2 Bituminous Distributors: The distributor shall have pneumatic tires of sufficient size and number to prevent rutting, shoving, or otherwise damaging any part of the pavement structure. The distributor shall be designed and equipped to distribute the bituminous material in a uniform double or triple lap at the specified temperature, at readily determined and controlled rates with an allowable variation from the specified rate of not more than plus or minus 5 percent, and at variable widths. Distributor equipment shall include a separate power unit for the bitumen pump, full-circulation spray bars, tachometer, pressure gauges, volume-measuring devices, adequate heaters for heating of materials to the proper application temperature, a thermometer for reading the temperature of tank contents, and a hand-held hose attachment suitable for applying bituminous material manually to areas inaccessible to the distributor. The distributor shall be equipped to circulate and agitate the bituminous material during the heating process.

1.5.3 Aggregate Spreader: The aggregate-spreading equipment shall be adjustable and capable of uniformly spreading aggregate at the specified rate in a single-pass operation over the surface to be sealed.

1.5.4 Pneumatic-Tired Roller: The pneumatic-tired roller shall be of sufficient size to seat the cover aggregate into the bituminous material without fracturing the aggregate particles.

1.5.5 Power Brooms and Power Blowers: Power brooms and power blowers shall be suitable for cleaning surfaces to which the seal coat is to be applied.

1.5.6 Storage Tanks: Tanks shall be capable of heating the bituminous material, under effective and positive control at all times, to the required temperature. Heating shall be accomplished by steam coils, hot oil, or electricity. An armored thermometer shall be affixed to the tank so that the temperature of the bituminous material may be read at all times.

1.6 WEATHER LIMITATIONS: The seal coat shall be applied when the existing surface is dry, and when the weather is not foggy or rainy. The seal coat shall not be applied when the atmospheric temperature is below 15 degrees C (60 degrees F) in the shade, when the pavement surface temperature is below 10 degrees C, (50 degrees F,) or when the wind velocity will prevent the uniform application of the bitumen or aggregates.

PART 2 PRODUCTS

2.1 BITUMINOUS MATERIAL: Bituminous material shall conform to AASHTO M 20, AASHTO M 82, AASHTO M 226, or ASTM D 490, ASTM D 946, ASTM D 977, ASTM D 2027, ASTM D 2397, ASTM D 3381, Grade MC-70.

2.2 MINERAL AGGREGATE: Aggregate shall consist of crushed stone, crushed gravel, crushed slag, sand and screenings. The moisture content of the aggregate shall be [not greater than 3 percent such that the aggregate will readily bond with the bituminous material. Drying may be required, as directed. The aggregate shall conform to the gradation shown in TABLE I.

TABLE I. AGGREGATE GRADATIONS

(Percent by Weight Passing Square-Mesh Sieves)

Sieve Size	Gradation No. 1	Gradation No. 2	Gradation No. 3
1/2 in.	100	--	--
3/8 in.	85-100	100	--
No. 4	10-30	85-100	100
No. 8	0-10	10-40	10-40
No. 16	0-5	0-10	0-10
No. 50	--	0-5	0-5

2.2.1 Coarse Aggregate: Coarse aggregate shall consist of clean, sound, durable particles meeting the following requirements.

2.2.1.1 Film Retention: The aggregate shall exhibit not less than 95 percent retention of bituminous film.

2.2.1.2 Particle Shapes: The quantity of flat and elongated particles on any sieve shall not exceed 20 percent by weight when determined in accordance with ASTM D 4791.

2.2.1.3 Weight Loss: The percent weight loss shall not exceed 40 after 500 revolutions, as determined in accordance with ASTM C 131.

2.2.1.4 Friable Particles: The amount of friable particles shall not exceed 0.1 percent of the total weight of aggregate sample when tested in accordance with ASTM C 142.

2.2.1.5 Crushed Slag: The dry weight of crushed slag shall not be less than 1200 kilograms per cubic meter (75 pcf), as determined in accordance with ASTM C 29.

2.2.1.6 Crushed Aggregate: Crushed aggregate retained on the 4.75 mm (No. 4) sieve and each coarser sieve shall contain at least 75 percent by weight of crushed pieces having one or more fractured faces with the area of each face equal to at least 75 percent of the smaller midsectional area of the aggregate particle. When two fractures are contiguous, the angle between the planes of fractures shall be at least 30 degrees to count as two fractured faces.

2.2.2 Fine Aggregate: Fine aggregate shall consist of clean, sound, durable particles of crushed stone, durable particles of crushed stone, slag, or gravel. The aggregate shall meet its requirements for stripping, abrasion resistance and percent friable particles as specified for coarse aggregate.

2.3 ANTISTRIPPING AGENT: The use of an antistripping agent is subject to prior approval by the Contracting Officer.

PART 3 EXECUTION

3.1 PREPARATION OF SURFACE: Prior to applying the seal coat, damaged pavement shall be repaired and cracks filled. Immediately before applying the seal coat, all loose material, dirt, clay, or other objectionable material shall be removed from the surface to be sealed. Material removed from the surface shall not be mixed with the cover aggregate.

3.2 BITUMINOUS MATERIAL

3.2.1 Application Rate: The bituminous material shall be spread in the quantities shown in TABLE III. The exact quantities within the range specified, which may be varied to suit field conditions, will be determined by the Contractor and approved by the Contracting Officer prior to use.

TABLE III. APPLICATION OF MATERIAL

(Quantities Per Square Yard)

Gradation No.	Bitumen, gallons	Aggregate, pounds
1	0.15-0.20	15-20
2	0.10-0.15	10-15
3	0.10-0.15	10-15

3.2.2 Application Temperature: Asphalt application temperature shall provide an application viscosity between 10 and 60 seconds, Saybolt Furol, or between 20 and 120 square mm per second, (20 and 120 centistokes,) kinematic. The temperature viscosity relation shall be furnished to the Contracting Officer.

3.2.3 Application of Bituminous Material: Following the preparation and inspection of the pavement surface, the seal coat material shall be applied at the specified rates. The bituminous material shall be uniformly applied in a single pass of the distributor and with either a double or triple lap spray over the surface to be sealed. Building paper shall be spread on the surface for a sufficient distance back from the ends of each application so that flow through the spray bar may be started and stopped on the paper and so that all sprays will be operating at the proper pressure on the surface to be sealed. Immediately after the

application, the building paper shall be removed. Spots missed by the distributor shall be properly treated with bituminous material. No smoking, fires, or flames other than the heaters that are a part of the equipment shall be permitted within 8 meters (25 feet) of heating, distributing, and transferring operations of bituminous material other than bituminous emulsions. If tar is used, a full-face organic vapor-type respirator and protective creams shall be used by personnel exposed to fumes. Protective creams shall not be used as a substitute for cover clothing.

3.3 AGGREGATE

3.3.1 Application Rate: The aggregate shall be spread in the quantities shown in TABLE III. The exact quantities within the range specified, which may be varied to suit field conditions, will be determined by the Contractor, and approved by the Contracting Officer prior to use. The aggregate weights shown in this table are those of aggregate having a specific gravity of 2.65. If the specific gravity of the aggregate to be used is less than 2.55 or greater than 2.75, adjustments shall be made in the number of pounds of aggregate required per square yard to insure a constant volume of aggregate per square yard of treatment.

3.3.2 Application of Aggregate: The specified quantity of cover aggregate shall be spread uniformly over the bituminous material. Before the bituminous material is applied, sufficient aggregate to cover the distributor load of bituminous material shall be on trucks at the site of the work. No bituminous material shall be down more than 3 minutes before it is covered with aggregate. Spreading shall be done uniformly with aggregate-spreading equipment. Trucks spreading aggregate shall be operated backwards, covering the bituminous material ahead of the truck wheels. Areas having insufficient cover shall be lightly recovered with additional aggregate by hand during the operations whenever necessary.

3.4 ROLLING AND BROOMING: Immediately following the application of cover aggregate, rolling operations shall begin. Rolling shall be accomplished with pneumatic-tired rollers. The rollers shall be operated at a speed that will not displace the aggregate. Rolling shall continue until the aggregate is uniformly distributed and keyed into the bituminous material. All surplus aggregate shall be swept off the surface and removed not less than 24 hours nor more than 4 days after rolling is completed.

3.5 FIELD QUALITY CONTROL

3.5.1 Testing: Field tests shall be performed in sufficient numbers to assure that the specifications are being met. Testing shall be the responsibility of the Contractor and shall be performed by an approved commercial laboratory. The following number of tests, if performed at the appropriate time, will be the minimum acceptable for each type of operation.

3.5.1.1 Gradation: Gradation tests shall be performed in accordance with ASTM C 136. A minimum of one gradation shall be performed for every 25 cubic meters (cubic yards) of aggregate to be placed, with a minimum of three gradations for each day's run. When [the source of materials is changed or] deficiencies are found, the gradation shall be repeated and the material already placed shall be retested to determine the extent of the unacceptable material. All in-place unacceptable material shall be replaced at no additional expense to the Government.

3.5.1.2 Abrasion Resistance: Abrasion resistance tests shall be performed in accordance with ASTM C 131. One test shall be performed for every 25 cubic meters (cubic yards) of aggregate placed.

3.5.2 Bituminous Material: A sample of the bituminous material used will be obtained by the Contractor under the supervision of the Contracting Officer. The sample will be retained by the Government.

3.6 SAMPLING AND TESTING

3.6.1 General Requirements: Sampling and testing shall be performed by an approved commercial testing laboratory or by facilities furnished by the Contractor. No work requiring testing will be permitted

until the facilities have been inspected and approved. The first inspection shall be at the expense of the Government. Costs incurred for any subsequent inspection will be charged to the Contractor. Tests shall be performed in sufficient numbers and at the location and times directed to ensure that the materials meet specified requirements.

3.6.2 Samples: Aggregate samples for laboratory tests shall be taken in accordance with ASTM D 75. Samples of bituminous material shall be taken in accordance with AASHTO T 40 or ASTM D 140.

3.6.3 Initial Sampling and Testing

3.6.3.1 Aggregates: Sources from which aggregates are to be obtained shall be selected and notification thereof furnished the Contracting Officer within 15 days after the award of the Contract. Tests for the evaluation of aggregates shall be made by an approved commercial laboratory at no expense to the Government. Tests for determining the suitability of aggregate shall include, but not limited to: gradation in accordance with ASTM C 136, abrasion resistance in accordance with ASTM C 131, clay lumps and friable particles in accordance with ASTM C 142, unit weight and voids in accordance with ASTM C 29, and flat and elongated particles in accordance with ASTM D 4791. The use of an antistripping agent is subject to approval by the Contracting Officer.

3.6.3.2 Bituminous Materials: Sources from which bituminous materials are to be obtained shall be selected and notification thereof furnished the Contracting Officer within 15 days after the award of the contract.

3.6.3.3 Calibration Test: The Contractor shall furnish all equipment and materials and labor necessary to calibrate the bituminous distributor and the aggregate spreader. All calibrations shall be made with the approved job materials and prior to applying the seal coat materials to the prepared surface. Calibration of the bituminous distributor shall be in accordance with ASTM D 2995.

3.6.4 Sampling and Testing During Construction: Quality control sampling and testing shall be performed as required in paragraph FIELD QUALITY CONTROL.

3.7 TRAFFIC CONTROL: Contractor shall protect freshly placed seal coats from damage by traffic.

-- End of Section --

INDEX

SECTION 02580

PAVEMENT MARKINGS

Paragraph		Page
1.1	REFERENCES	02580-1
1.2	MEASUREMENT AND PAYMENT	02580-1
1.3	SUBMITTALS	02580-2
1.4	DELIVERY AND STORAGE	02580-2
1.5	EQUIPMENT	02580-2
1.6	HAND-OPERATED, PUSH-TYPE MACHINES	02580-3
2.1	PAINT	02580-3
2.2	THERMOPLASTIC COMPOUNDS	02580-4
2.3	PREFORMED TAPE	02580-4
2.4	SAMPLING AND TESTING	02580-5
3.1	SURFACE PREPARATION	02580-5
3.2	APPLICATION	02580-5

SECTION 02580

PAVEMENT MARKINGS

PART 1 GENERAL

1.1 REFERENCES: The publications listed below form a part of this specification to the extent referenced. The publications are referred to in the text by basic designation only.

AMERICAN ASSOCIATION OF STATE HIGHWAY AND TRANSPORTATION OFFICIALS (AASHTO)

AASHTO M 247 (1981; Rev 1986) Glass Beads Used in Traffic Paint

AASHTO M 248 (1991) Ready-Mixed White and Yellow Traffic Paints

AMERICAN SOCIETY FOR TESTING AND MATERIALS (ASTM)

ASTM D 792 (1991) Density and Specific Gravity (Relative Density) of Plastics by Displacement

ASTM D 4280 (1995) Extended Life Type, Nonplowable, Prismatic, Raised, Retroreflective Pavement Markers

ASTM D 4505 (1992) Preformed Plastic Pavement Marking Tape for Extended Service Life

ASTM E 28 (1992) Softening Point by Ring-and-Ball Apparatus

FEDERAL SPECIFICATIONS (FS)

FS TT-B-1325 (Rev C) Beads (Glass Spheres) Retro-Reflective (Metric)

FS TT-P-85 (Rev E) Paint, Traffic and Airfield Marking, Solvent Base

FS TT-P-115 (Rev F) Paint, Traffic (Highway, White, and Yellow)

FS TT-P-1952 (Rev D) Paint, Traffic and Airfield Marking, Waterborne (Metric)

1.2 MEASUREMENT AND PAYMENT

1.2.1 Surface Preparation: The unit of measurement for surface preparation shall be the number of square meters (square feet) of pavement surface prepared for marking and accepted by the Contracting Officer.

1.2.2 Pavement Striping and Markings: The unit of measurement for pavement striping and markings shall be the number of square meters (square feet) of reflective and nonreflective striping or marking actually completed and accepted by the Contracting Officer.

1.2.3 Payment: The quantities of surface preparation, pavement striping or markings, and raised pavement markers determined as specified in paragraph Measurement will be paid for as outlined in the Contractor's bid schedule. The payment will constitute full compensation for furnishing all labor, materials, tools, equipment, appliances, and doing all work involved in marking pavements. Any striping or markings which are placed without reflective media, when reflective media is required, shall be

removed and replaced at no cost to the Government. Striping or markings which do not conform to the alignment and/or location required will be removed and replaced at no cost to the Government.

1.3 SUBMITTALS: Government approval is required for submittals with a "GA" designation; submittals having an "FIO" designation are for information only. The following shall be submitted in accordance with Section 01300 SUBMITTAL PROCEDURES:

a. Lists of proposed equipment to be used in performance of construction work, including descriptive data, and notifications of proposed Contractor actions as specified in this section.

b. Certified copies of the test reports, prior to the use of the materials at the jobsite. Testing shall be performed in an approved independent laboratory.

1.4 DELIVERY AND STORAGE: All materials shall be delivered and stored in sealed containers that plainly show the designated name, formula or specification number, batch number, color, date of manufacture, manufacturer's name, and directions, all of which shall be plainly legible at time of use.

1.5 EQUIPMENT: All machines, tools and equipment used in the performance of the work shall be approved and maintained in satisfactory operating condition. Equipment operating on roads and runways will display low speed traffic markings and traffic warning lights.

1.5.1 Paint Application Equipment: The equipment to apply paint to pavements shall be a self-propelled or mobile-drawn pneumatic spraying machine with suitable arrangements of atomizing nozzles and controls to obtain the specified results. The machine shall have a speed during application not less than 8 kilometers per hour (5 mph), (5 mph,) and shall be capable of applying the stripe widths indicated, at the paint coverage rate specified in paragraph APPLICATION, and of even uniform thickness with clear-cut edges. Equipment used for marking streets and highways shall be capable of placing the prescribed number of lines at a single pass as solid lines, intermittent lines or a combination of solid and intermittent lines using a maximum of two different colors of paint as specified. The paint applicator shall have paint reservoirs or tanks of sufficient capacity and suitable gauges to apply paint in accordance with requirements specified. Tanks shall be equipped with suitable air-driven mechanical agitators. The spray mechanism shall be equipped with quick-action valves conveniently located, and shall include necessary pressure regulators and gauges in full view and reach of the operator. Paint strainers shall be installed in paint supply lines to insure freedom from residue and foreign matter that may cause malfunction of the spray guns. The paint applicator shall be readily adaptable for attachment of an air-actuated dispenser for the reflective media approved for use. Pneumatic spray guns shall be provided for hand application of paint in areas where the mobile paint applicator cannot be used.

1.5.2 Thermoplastic Application Equipment

1.5.2.1 Thermoplastic Material: Thermoplastic material shall be applied to the primed pavement surface by spray techniques or by the extrusion method, wherein one side of the shaping die is the pavement and the other three sides are contained by, or are part of, suitable equipment for heating and controlling the flow of material. By either method, the markings shall be applied with equipment that is capable of providing continuous uniformity in the dimensions of the stripe.

1.5.2.2 Application Equipment: Application equipment shall provide continuous mixing and agitation of the material. Conveying parts of the equipment between the main material reservoir and the extrusion shoe or spray gun shall prevent accumulation and clogging. All parts of the equipment which come into contact with the material shall be easily accessible and exposable for cleaning and maintenance. All mixing and conveying parts up to and including the extrusion shoes and spray guns shall maintain the material at the required temperature with heat-transfer oil or electrical-element-controlled heat.

The application equipment shall be so constructed as to insure continuous uniformity in the dimensions of the stripe. The applicator shall provide a means for cleanly cutting off stripe ends squarely and shall provide a method of applying "skiplines." The equipment shall be capable of applying varying widths of traffic markings.

1.5.2.3 Portable Application Equipment: The portable applicator shall be defined as hand-operated equipment, specifically designed for placing special markings such as crosswalks, stopbars, legends, arrows, and short lengths of lane, edge and centerlines. The portable applicator shall be capable of applying thermoplastic pavement markings by the extrusion method. It is intended that the portable applicator will be loaded with hot thermoplastic composition from the melting kettles on the mobile applicator. The portable applicator shall be equipped with all the necessary components, including a materials storage reservoir, bead dispenser, extrusion shoe, and heating accessories, so as to be capable of holding the molten thermoplastic at a temperature of 195 to 220 degrees C (375 to 425 degrees F), of extruding a line of 75 to 300 mm (3 to 12 inches) in width, and in thicknesses of not less than 3.0 mm (0.125 inch) nor more than 5.0 mm (0.190 inch) and of generally uniform cross section.

1.5.3 Preformed Tape Application Equipment: Mechanical application equipment shall be used for the placement of preformed marking tape. Mechanical application equipment shall be defined as a mobile pavement marking machine specifically designed for use in applying precoated, pressure-sensitive pavement marking tape of varying widths, up to 300 mm (12 inches). The applicator shall be equipped with rollers, or other suitable compactive device, to provide initial adhesion of the preformed, pressure-sensitive marking tape with the pavement surface. Additional hand-operated rollers shall be used as required to properly seat the thermoplastic tape.

1.5.4 Surface Preparation Equipment

1.5.4.1 Sandblasting Equipment: Sandblasting equipment shall include an air compressor, hoses, and nozzles of proper size and capacity as required for cleaning surfaces to be painted. The compressor shall be capable of furnishing not less than 70.8 liters per sec (150 cfm) of air at a pressure of not less than 620 kPa (90 psi) at each nozzle used, and shall be equipped with traps that will maintain the compressed air free of oil and water.

1.5.4.2 Waterblast Equipment: The water pressure shall be specified at 17.9 MPa (2600 psi) at 60 degrees C (140 degrees F) in order to adequately clean the surfaces to be marked.

1.5.5 Traffic Controls: Suitable warning signs shall be placed near the beginning of the worksite and well ahead of the worksite for alerting approaching traffic from both directions. Small markers shall be placed along newly painted lines or freshly placed raised markers to control traffic and prevent damage to newly painted surfaces or displacement of raised pavement markers. Painting equipment shall be marked with large warning signs indicating slow-moving painting equipment in operation.

1.6 HAND-OPERATED, PUSH-TYPE MACHINES: All machines, tools, and equipment used in performance of the work shall be approved and maintained in satisfactory operating condition. Hand-operated push-type machines of a type commonly used for application of paint to pavement surfaces shall be acceptable for marking small streets and parking areas. Applicator machine shall be equipped with the necessary paint tanks and spraying nozzles, and shall be capable of applying paint uniformly at coverage specified. Sandblasting equipment shall be provided as required for cleaning surfaces to be painted. Hand-operated spray guns shall be provided for use in areas where push-type machines cannot be used.

PART 2 PRODUCTS

2.1 PAINT: The paint shall be homogeneous, easily stirred to smooth consistency, and shall show no hard settlement or other objectionable characteristics during a storage period of 6 months. Paint for roads and streets shall conform to FS TT-P-115 and AASHTO M 248, color as indicated.

2.2 THERMOPLASTIC COMPOUNDS: The thermoplastic reflectorized pavement marking compound shall be extruded or sprayed in a molten state onto a primed pavement surface. Following a surface application of glass beads and upon cooling to normal pavement temperatures, the marking shall be an adherent reflectorized strip of the specified thickness and width that is capable of resisting deformation by traffic.

2.2.1 Composition Requirements: The binder component shall be formulated as a hydrocarbon resin. The pigment, beads and filler shall be uniformly dispersed in the binder resin. The thermoplastic composition shall be free from all skins, dirt, and foreign objects and shall comply with the following requirements:

	Percent by Weight	
Component	White	Yellow
Binder	17 min.	17 min.
Titanium dioxide	10 min.	-
Calcium carbonate & inert fillers	49 max.	*
Yellow pigments	-	*

* Amount and type of yellow pigment, calcium carbonate and inert fillers shall be at the option of the manufacturer, providing the other composition requirements of this specification are met.

2.2.2 Physical Properties

2.2.2.1 Color: The color shall be as indicated.

2.2.2.2 Drying Time: When installed at 20 degrees C (70 degrees F) and in thicknesses between 3 and 5 mm, (1/8 and 3/16 inch,) the composition shall be completely solid and shall show no damaging effect from traffic after curing 15 minutes.

2.2.2.3 Softening Point: The composition shall have a softening point of not less than 90 degrees C (194 degrees F) when tested in accordance with ASTM E 28.

2.2.2.4 Specific Gravity: The specific gravity of the composition shall be between 1.9 and 2.2 as determined in accordance with ASTM D 792.

2.2.3 Asphalt Concrete Primer: The primer for asphalt concrete pavements shall be a thermosetting adhesive with a solids content of pigment reinforced synthetic rubber and synthetic plastic resin dissolved and/or dispersed in a volatile organic solvent. The solids content shall not be less than 10 percent by weight at 20 degrees C (70 degrees F) and 60 percent relative humidity. A wet film thickness of 0.10 mm (0.005 inch) plus or minus 0.025 mm, (0.001 inch,) shall dry to a tack-free condition in less than 5 minutes.

2.3 PREFORMED TAPE: The preformed tape shall be an adherent reflectorized strip in accordance with ASTM D 4505 Type I or IV, Class optional.

2.4 SAMPLING AND TESTING: Materials proposed for use shall be stored on the project site in sealed and labeled containers, or segregated at source of supply, sufficiently in advance of needs to allow 60 days for testing. Upon notification by the Contractor that the material is at the site or source of supply, a sample shall be taken by random selection from sealed containers by the Contractor in the presence of a representative of the Contracting Officer. Samples shall be clearly identified by designated name, specification number, batch number, manufacturer's formulation number, project contract number, intended use, and quantity involved. Testing shall be performed in an approved independent laboratory. If materials are approved based on reports furnished by the Contractor, samples will be retained by the Government for possible future testing should the material appear defective during or after application.

PART 3 EXECUTION

3.1 SURFACE PREPARATION: Surfaces to be marked shall be thoroughly cleaned before application of the pavement marking material. Dust, dirt, and other granular surface deposits shall be removed by sweeping, blowing with compressed air, rinsing with water or a combination of these methods as required. Rubber deposits, surface laitance, existing paint markings, and other coatings adhering to the pavement shall be completely removed with scrapers, wire brushes, sandblasting, approved chemicals, or mechanical abrasion as directed. Areas of old pavement affected with oil or grease shall be scrubbed with several applications of trisodium phosphate solution or other approved detergent or degreaser, and rinsed thoroughly after each application. After cleaning, oil-soaked areas shall be sealed with cut shellac to prevent bleeding through the new paint. Pavement surfaces shall be allowed to dry, when water is used for cleaning, prior to striping or marking. Surfaces shall be recleaned, when work has been stopped due to rain.

3.1.1 Pretreatment for Early Painting: Where early painting is required on rigid pavements, a pretreatment with an aqueous solution containing 3 percent phosphoric acid and 2 percent zinc chloride shall be applied to prepared pavement areas prior to painting.

3.2 APPLICATION: All pavement markings and patterns shall be placed as shown on the plans.

3.2.1 Paint: Paint shall be applied to clean, dry surfaces, and only when air and pavement temperatures are above 5 degrees C (40 degrees F) and less than 35 degrees C. (95 degrees F.) Paint temperature shall be maintained within these same limits. New asphalt pavement surfaces and new portland concrete cement shall be allowed to cure for a period of not less than 30 days before applications of paint. Paint shall be applied pneumatically with approved equipment at rate of coverage specified herein. The Contractor shall provide guide lines and templates as necessary to control paint application. Special precautions shall be taken in marking numbers, letters, and symbols. Edges of markings shall be sharply outlined.

3.2.1.1 Rate of Application: Reflective Markings: Pigmented binder shall be applied evenly to the pavement area to be coated at a rate of 10 plus or minus 0.5 square meter per liter. (105 plus or minus 5 square feet per gallon.) Glass spheres shall be applied uniformly to the wet paint on road and street pavement at a rate of 0.7 (6) plus or minus 0.06 kilograms (0.5 pounds) of glass spheres per liter (gallon) of paint.

Nonreflective Markings: Paint shall be applied evenly to the pavement surface to be coated at a rate of 10 plus or minus 0.5 square meter per liter. (105 plus or minus 5 square feet per gallon.)

3.2.1.2 Drying: The maximum drying time requirements of the paint specifications will be strictly enforced to prevent undue softening of bitumen, and pickup, displacement, or discoloration by tires of traffic. If there is a delay in drying of the markings, painting operations shall be discontinued until cause of the slow drying is determined and corrected.

3.2.2 Thermoplastic Compounds: Thermoplastic pavement markings shall be placed upon dry pavement; surface dry only shall not be considered an acceptable condition. At the time of installation, the pavement surface temperature shall be a minimum of 5 degrees C (40 degrees F) and rising. Thermoplastics, as placed, shall be free from dirt or tint.

3.2.2.1 Longitudinal Markings: All centerline, edgeline, and other longitudinal type markings shall be applied with a mobile applicator. All special markings, stop bars, legends, arrows, and similar patterns shall be placed with a portable applicator, using the extrusion method.

3.2.2.2 Primer: After surface preparation has been completed the asphalt and/or concrete pavement surface shall be primed. The primer shall be applied with spray equipment. Primer materials shall be allowed to "set-up" prior to applying the thermoplastic composition. The asphalt concrete primer shall be allowed to dry to a tack-free condition, usually occurring in less than 10 minutes. The portland cement concrete primer shall be allowed to dry in accordance with the thermoplastic manufacturer's recommendations. To shorten the curing time of the epoxy resins an infrared heating device may be used on the concrete primer.

Asphalt Concrete Primer: Primer shall be applied to all asphalt concrete pavements at a wet film thickness of 0.10 mm (0.005 inch), plus or minus 0.025 mm (0.001 inch) 25-40 square meters per liter. (265-400 square feet per gallon).

Portland Cement Concrete Primer: Primer shall be applied to all concrete pavements (including concrete bridge decks) at a wet film thickness of between 1.0 to 1.3 mm (0.04 to 0.05 inch) 30-40 square meters per liter. (320-400 square feet per gallon).

3.2.2.3 Markings: After the primer has "set-up" the thermoplastic shall be applied at temperatures no lower than 190 degrees C (375 degrees F) nor higher than 220 degrees C (425 degrees F) at the point of deposition. Immediately after installation of the marking, drop-on glass spheres shall be mechanically applied such that the spheres are held by and imbedded in the surface of the molten material.

Extruded Markings: All extruded thermoplastic markings shall be applied at the specified width and at a thickness of not less than 3.0 mm (0.125 inch) nor more than 5.0 mm (0.190 inch). (0.190 inch.)

Sprayed Markings: All sprayed thermoplastic markings shall be applied at the specified width and the thicknesses designated in the contract plans. If the plans do not specify a thickness, centerline markings shall be applied at a wet thickness of 2.0 mm (0.090 inch), plus or minus 0.10 mm (0.005 inch, and edgeline markings at a wet thickness of 1.5 mm (0.60 inch), plus or minus 0.10 mm (0.005 inch).

3.2.3 Preformed Tape: The pavement surface temperature shall be a minimum of 15 degrees C (60 degrees F) and the ambient temperature shall be a minimum of 15 degrees C (60 degrees F) and rising. The preformed markings shall be placed in accordance with the manufacturer's written instructions.

-- End of Section --

INDEX

SECTION 02730

SANITARY SEWERS

Paragraph		Page
1.1	REFERENCES	02730-1
1.2	GENERAL REQUIREMENTS	02730-2
1.3	MEASUREMENT AND PAYMENT	02730-2
1.4	SUBMITTALS	02730-3
2.1	PIPE	02730-3
2.2	FITTINGS	02730-3
2.3	JOINTS	02730-4
2.4	BRANCH CONNECTIONS	02730-4
2.5	FRAMES AND COVERS	02730-4
2.6	STEEL LADDER	02730-4
2.7	CEMENT MORTAR	02730-4
2.8	STRUCTURES	02730-4
3.1	INSTALLATION	02730-5
3.2	CONCRETE CRADLE AND ENCASEMENT	02730-7
3.3	WYE BRANCHES	02730-7
3.4	SEPTIC TANK	02730-7
3.5	MANHOLES	02730-7
3.6	BUILDING CONNECTIONS	02730-8
3.7	CLEANOUTS AND OTHER APPURTENANCES	02730-8

SECTION 02730

SANITARY SEWERS

PART 1 GENERAL

1.1 REFERENCES: The publications listed below form a part of this specification to the extent referenced. The publications are referred to in the text by basic designation only.

AMERICAN SOCIETY FOR TESTING AND MATERIALS (ASTM)

ASTM A 74	(1994) Cast Iron Soil Pipe and Fittings
ASTM A 123	(1989a) Zinc (Hot-Dip Galvanized) Coatings on Iron and Steel Products
ASTM C 33	(1993) Concrete Aggregates
ASTM C 94	(1994) Ready-Mixed Concrete
ASTM C 150	(1994) Portland Cement
ASTM C 260	(1994) Air-Entraining Admixtures for Concrete
ASTM C 425	(1991) Compression Joints for Vitrified Clay Pipe and Fittings
ASTM C 443	(1994) Joints for Circular Concrete Sewer and Culvert Pipe, Using Rubber Gaskets
ASTM C 478	(1994) Precast Reinforced Concrete Manhole Sections
ASTM C 564	(1993) Rubber Gaskets for Cast Iron Soil Pipe and Fittings
ASTM C 828	(1990) Low-Pressure Air Test of Vitrified Clay Pipe Lines
ASTM C 924	(1989) Concrete Pipe Sewer Lines by Low-Pressure Air Test Method
ASTM C 972	(1982; R 1990) Test Method for Compression-Recovery of Tape Sealant
ASTM D 1784	(1992) Rigid Poly(Vinyl Chloride) (PVC) Compounds and Chlorinated Poly(Vinyl Chloride) (CPVC) Compounds
ASTM D 2680	(1993) Acrylonitrile-Butadiene-Styrene (ABS) and Poly(Vinyl Chloride) (PVC) Composite Sewer Piping
ASTM D 3034	(1994) Type PSM Poly(Vinyl Chloride) (PVC) Sewer Pipe and Fittings
ASTM D 3212	(1992) Joints for Drain and Sewer Plastic Pipes Using Flexible Elastomeric Seals
ASTM D 3350	(1993) Polyethylene Plastics Pipe and Fittings Materials
ASTM F 402	(1993) Safe Handling of Solvent Cements, Primers, and Cleaners Used for Joining Thermoplastic Pipe and Fittings

ASTM F 477	(1993) Elastomeric Seals (Gaskets) for Joining Plastic Pipe
ASTM F 794	(1993a) Poly(Vinyl Chloride) (PVC) Profile Gravity Sewer Pipe and Fittings Based on Controlled Inside Diameter

AMERICAN WATER WORKS ASSOCIATION (AWWA)

AWWA C110	(1993) Ductile-Iron and Gray-Iron Fittings, 3 In. Through 48 In. (75 mm through 1200 mm), for Water and Other Liquids
AWWA C111	(1990) Rubber-Gasket Joints for Ductile-Iron Pressure Pipe and Fittings
AWWA C115	(1988) Flanged Ductile-Iron Pipe with Threaded Flanges
AWWA C151	(1991) Ductile-Iron Pipe, Centrifugally Cast, for Water or Other Liquids

NATIONAL FIRE PROTECTION ASSOCIATION (NFPA)

NFPA 49	(1991) Hazardous Chemicals Data
NFPA 325M	(1991) Fire Hazard Properties of Flammable Liquids, Gases, and Volatile Solids
NFPA 704	(1990) Identification of the Fire Hazards of Materials

1.2 GENERAL REQUIREMENTS: The construction required herein shall include septic tank, appurtenant structures and building sewers to points of connection with the building drains 1.5 m (5 feet) outside the building to which the sewer system is to be connected. The Contractor shall replace damaged material and redo unacceptable work at no additional cost to the Government. Excavation and backfilling is specified in Section 02222 EXCAVATION, TRENCHING, AND BACKFILLING FOR UTILITIES SYSTEMS. Backfilling shall be accomplished after inspection by the Contracting Officer. Before, during, and after installation, plastic pipe and fittings shall be protected from any environment that would result in damage or deterioration to the material. The Contractor shall have a copy of the manufacturer's instructions available at the construction site at all times and shall follow these instructions unless directed otherwise by the Contracting Officer. Solvents, solvent compounds, lubricants, elastomeric gaskets, and any similar materials required to install the plastic pipe shall be stored in accordance with the manufacturer's recommendation and shall be discarded if the storage period exceeds the recommended shelf life. Solvents in use shall be discarded when the recommended pot life is exceeded.

1.2.1 Related Documents

a. Section 03100 — Structural Concrete Formwork

b. Section 03200 — Concrete Reinforcement

c. Section 03250 — Expansion Joints, Contraction Joints, and Waterstops

d. Section 03300 — Cast-In-Place Structural Concrete

1.3 MEASUREMENT AND PAYMENT: Measurements and payments will be based on completed work performed in accordance with the drawings, specifications, and the bid schedules. No payment will be made under this section for excavation, backfilling, or grading.

1.3.1 Pipe: The length of pipe installed will be measured from center to center of manholes and from the center of sewer to the end of the service connections without deduction for fittings or diameters of manholes and will be paid for according to the applicable contract unit price per meter (foot) for the size of pipe. No extra payment will be made for bends.

1.3.2 Manhole and Septic Tanks: The depth of manhole and septic tank will be as shown in plan. Septic tank and manhole extension will be paid for according to the applicable contract price. No extra payment will be made for pipe fittings required to make connections to the septic system.

1.3.3 Concrete: Concrete used for pipe encasement, cradles, and similar supports, indicated or required for reasons other than faulty construction methods or negligence of the Contractor, will be measured and paid for according to the contract price for concrete for encasement and cradles.

1.3.4 Wye Branches: Wye branches installed in new sewers will be paid for according to the applicable contract unit price for the size indicated in the bid schedule. This will be in addition to the price per meter (foot) of straight pipe.

1.4 SUBMITTALS: Government approval is required for submittals with a "GA" designation; submittals having an "FIO" designation are for information only. The following shall be submitted in accordance with Section 01300 SUBMITTAL PROCEDURES:

a. Certificates of compliance stating the type of cement used in manufacture of concrete pipe, fittings and precast manholes.

b. Certificates of compliance stating that the fittings or gaskets used for waste drains or lines designated on the plans.

PART 2 PRODUCTS

2.1 PIPE: Pipe shall conform to the respective specifications and other requirements specified below.

2.1.1 PVC Pipe: ASTM D 3034, Type PSM with a maximum SDR of 35, Size 380 mm (15 inches) or less in diameter. ASTM F 949 for corrugated sewer pipes with a smooth interior. UBPPA UNI-B-9 and ASTM F 794, Series 46, for ribbed sewer pipe with smooth interior, size 200 mm (8 inch) through 1200 mm (48 inch) diameters. PVC shall be certified by the compounder as meeting the requirements of ASTM D 1784, cell Class 12454B. The pipe stiffness shall be greater than or equal to 735/D for cohesionless material pipe trench backfills.

2.1.2 High Density Polyethylene Pipe: ASTM F 894, Class 63, size 450 mm (18 inch) through 3000 mm (120 inch). (120 inch.) ASTM F 714, size 100 mm (4 inch) through 1200 mm (48 inch). The polyethylene shall be certified by the resin producer as meeting the requirements of ASTM D 3350, cell Class 334433C. The pipe stiffness shall be greater than or equal to 1170/D for cohesionless material pipe trench backfills.

2.1.3 Ductile Iron Pipe: Pipe shall conform to AWWA C151 unless otherwise shown or specified.

2.1.4 Cast Iron Soil Pipe: ASTM A 74, Class SV except Class XH where indicated. Lines indicated as acid resistant shall be Class XH and contain not less than 12 percent silicon. When installed underground, pipe shall be encased with polyethylene in accordance with AWWA C105.

2.2 FITTINGS: Fittings shall be compatible with the pipe supplied and shall have a strength not less than that of the pipe. Fittings shall conform to the respective specifications and other requirements specified below.

2.2.1 PVC Pipe: ASTM D 3034 for type PSM pipe. ASTM F 949 for corrugated sewer pipe with a smooth interior. UBPPA UNI-B-9 and ASTM F 794, Series 46, for ribbed sewer pipe with smooth interior.

2.2.2 Ductile Iron Pipe: Mechanical fittings shall conform to AWWA C110, rated for 1.03 MPa (150 psi). Push-on fittings shall conform to AWWA C110 and AWWA C111, rated for 10.3 MPa (150 psi).

2.2.3 Cast Iron Soil Pipe: ASTM A 74.

2.3 JOINTS: Joints installation shall comply with the manufacturer's instructions. Fittings and gaskets utilized for waste drains or industrial waste lines shall be certified by the manufacturer as.

2.3.1 PVC Pipe: Flexible plastic pipe (PVC or high density polyethylene pipe) gasketed joints shall conform to ASTM D 3212.

2.3.2 Ductile Iron Pipe: Push-on joints shall conform to AWWA C111. Mechanical joints shall conform to AWWA C111 as modified by AWWA C151. Flanged joints shall conform to AWWA C115.

2.3.3 Cast Iron Soil Pipe: Rubber gaskets for compression joints shall conform to ASTM C 564. Packing material for caulked joints shall be twisted jute or oakum, tarred type, or asphalt-saturated cellulose-fiber. Joints for acid resisting cast iron soil pipe shall be made with acid resistant non-asbestos packing. The packing shall contain no material which would affect adhesion of the joint sealing material to the pipe. Lead shall conform to FS QQ-C-40.

2.4 BRANCH CONNECTIONS: Branch connections shall be made by use of regular fittings or solvent cemented saddles as approved. Saddles for ABS and PVC composite pipe shall conform to Figure 2 of ASTM D 2680; saddles for ABS pipe shall comply with Table 3 of ASTM D 2751; and saddles for PVC pipe shall conform to Table 4 of ASTM D 3034.

2.5 FRAMES AND COVERS: Frames and covers shall be cast iron, ductile iron or reinforced concrete. Cast iron frames and covers shall be as indicated or shall conform to FS RR-F-621, type as suitable for the application, circular, without vent holes. The frames and covers shall have a combined weight of not less than 181.4 kg (400 pounds). Reinforced concrete frames and covers shall be as indicated. The word "Sewer" shall be stamped or cast into covers so that it is plainly visible.

2.6 STEEL LADDER: A steel ladder shall be provided where the depth of a manhole exceeds 3.6 m (12 feet). The ladder shall not be less than 406.4 mm (16 inches) in width, with 19.1 mm (3/4 inch) diameter rungs spaced 304.8 mm (12 inches) apart. The two stringers shall be a minimum 9.5 mm (3/8 inch) thick and 50.8 mm (2 inches) wide. Ladders and inserts shall be galvanized after fabrication in conformance with ASTM A 123.

2.7 CEMENT MORTAR: Cement mortar shall conform to ASTM C 270, Type M with Type II cement.

2.7.1 Portland Cement: Portland cement shall conform to ASTM C 150, Type [II] for concrete used in concrete pipe, concrete pipe fittings, and manholes and type optional with the Contractor for cement used in concrete cradle, concrete encasement, and thrust blocking.

2.7.2 Portland Cement Concrete: Portland cement concrete shall conform to ASTM C 94, compressive strength of 28 MPa (4000 psi) at 28 days. Concrete used for cradle and encasement shall have a compressive strength of 17 MPa (2500 psi) minimum at 28 days. Concrete in place shall be protected from freezing and moisture loss for 7 days.

2.8 STRUCTURES

2.8.1 Reinforced Cast-in-Place Septic Tank: All concrete slabs, walls, and other structures shall be constructed to the dimensions and lines shown on plans.

All concrete work shall be in accordance with Division 3 of this specifications.

Concrete septic tank interior finish shall be protected from corrosion by coating with an approved bituminous coating or epoxy base seal coat material approved by the Contracting Officer.

2.8.2 Precast Reinforced Concrete Manhole Sections: Precast reinforced concrete manhole sections shall conform to ASTM C 478, except that portland cement shall be as specified herein. Joints shall be cement mortar, an approved mastic, rubber gaskets, a combination of these types; or the use of external preformed rubber joint seals and extruded rolls of rubber with mastic adhesive on one side.

PART 3 EXECUTION

3.1 INSTALLATION

3.1.1 Adjacent Facilities

3.1.1.1 Water Lines: Where the location of the sewer is not clearly defined by dimensions on the drawings, the sewer shall not be closer horizontally than 3 m (10 feet) to a water-supply main or service line.

3.1.1.2 Structures: Where sewer pipe is to be installed within 1 m (3 feet) of an existing or proposed building or structural foundation such as a retaining wall, control tower footing, water tank footing, or any similar structure, the sewer pipe shall be sleeved as specified above. Care shall be exercised and proper precautions taken during installation of the sewer pipe and sleeve to assure that there will be no damage to such structures and no settlement or movement of foundations or footing.

3.1.2 Pipe Laying

a. Pipe shall be protected during handling against impact shocks and free fall and the pipe interior shall be free of extraneous material.

b. Pipe laying shall proceed upgrade with the spigot ends of bell-and-spigot pipe and tongue ends of tongue-and-groove pipe pointing in the direction of the flow. Each pipe shall be laid accurately to the line and grade shown on the drawings. Pipe shall be laid and centered so that the sewer has a uniform invert. As the work progresses, the interior of the sewer shall be cleared of all superfluous materials.

c. Before making pipe joints all surfaces of the portions of the pipe to be joined shall be clean and dry. Lubricants, primers, and adhesives shall be used as recommended by the pipe manufacturer. The joints shall then be placed, fitted, joined, and adjusted to obtain the degree of water tightness required.

d. ABS composite pipe ends with exposed truss and filler material shall be coated with solvent weld material before making the joint to prevent water or air passage at the joint between the inner and outer wall of the pipe.

e. Installations of solvent weld joint pipe, using ABS or PVC pipe and fittings shall be in accordance with ASTM F 402. All required precautions shall be taken to assure adequate trench ventilation and protection for workers installing the pipe.

3.1.2.1 Caulked Joints: The packing material shall be well packed into the annular space to prevent the entrance of lead into the pipe. The remainder of the space shall be filled with molten lead that is hot enough to show a rapid change in color when stirred. Scum shall be removed before pouring. The lead shall be caulked to form a tight joint without overstraining the bell and shall have a minimum depth of 25 mm (1 inch) after caulking.

3.1.2.2 Trenches: Trenches shall be kept free of water and as dry as possible during bedding, laying, and jointing and for as long a period as required. When work is not in progress, open ends of pipe and fittings shall be satisfactorily closed so that no trench water or other material will enter the pipe or fittings.

3.1.2.3 Backfill: As soon as possible after the joint is made, sufficient backfill material shall be placed along the pipe to prevent pipe movement off line or grade. Plastic pipe shall be completely covered to prevent damage from ultraviolet light.

3.1.2.4 Width of Trench: If the maximum width of the trench at the top of the pipe, as specified in Section 02222 EXCAVATION, TRENCHING, AND BACKFILLING FOR UTILITIES SYSTEMS, is exceeded for any reason other than by direction, the Contractor shall install at no additional cost to the Government such concrete cradling, pipe encasement, or other bedding required to support the added load of the backfill.

3.1.2.5 Joints: Joints between different pipe materials shall be made as specified, using approved jointing materials.

3.1.2.6 Handling and Storage: Pipe, fittings and joint material shall be handled and stored in accordance with the manufacturer's recommendations. Storage facilities for plastic pipe, fittings, joint materials and solvents shall be classified and marked in accordance with NFPA 704, with classification as indicated in NFPA 49 and NFPA 325M.

3.1.3 Leakage Tests: Lines shall be tested for leakage by low pressure air testing, infiltration tests or exfiltration tests, as appropriate. Low pressure air testing for vitrified clay pipes shall be as prescribed in ASTM C 828. Low pressure air testing for concrete pipes shall be as prescribed in ASTM C 828. Low pressure air testing for PVC pipe shall be as prescribed in UBPPA UNI-B-6. Low pressure air testing procedures for other pipe materials shall use the pressures and testing times prescribed in ASTM C 828 and ASTM C 924, after consultation with the pipe manufacturer. Prior to infiltration or exfiltration tests the trench shall be backfilled up to at least the lower half of the pipe. If required, sufficient additional backfill shall be placed to prevent pipe movement during testing, leaving the joints uncovered to permit inspection. Visible leaks encountered shall be corrected regardless of leakage test results. When the water table is 600 mm (2 feet) or more above the top of the pipe at the upper end of the pipeline section to be tested, infiltration shall be measured using a suitable weir or other device acceptable to the Contracting Officer. When the Contracting Officer determines that infiltration cannot be properly tested, an exfiltration test shall be made by filling the line to be tested with water so that a head of at least 600 mm (2 feet) is provided above both the water table and the top of the pipe at the upper end of the pipeline to be tested. The filled line shall be allowed to stand until the pipe has reached its maximum absorption, but not less than 4 hours. After absorption, the head shall be re-established. The amount of water required to maintain this water level during a 2-hour test period shall be measured. Leakage as measured by either the infiltration test or exfiltration test shall not exceed 50 mL per 5 mm diameter per 100 meters (0.2 gallons per inch diameter per 100 feet) of pipeline per hour. When leakage exceeds the maximum amount specified, satisfactory correction shall be made and retesting accomplished. Testing, correction, and retesting shall be made at no additional cost to the Government.

3.1.4 Test for Deflection: When flexible pipe is used, a deflection test shall be made on the entire length of the installed pipeline not less than 30 days after the completion of all work including the leakage test, backfill, and placement of any fill, grading, paving, concrete, or superimposed loads. Deflection shall be determined by use of a deflection device or by use of a spherical, spheroidal, or elliptical ball, a cylinder,

or circular sections fused to a common shaft. The ball, cylinder, or circular sections shall have a diameter, or minor diameter as applicable, of 92.5 percent of the inside diameter of the pipe, but 95 percent for RPMP and RTRP. A tolerance of plus 0.5 percent will be permitted. The ball, cylinder, or circular sections shall be of a homogeneous material throughout, shall have a density greater than 1.0 as related to water at 4.0 degrees C (39.2 degrees F), and shall have a surface brinell hardness of not less than 150. It shall be center bored and through bolted with a 6.4 mm (1/4 inch) minimum diameter steel shaft having a yield strength of 480 MPa (70,000 psi) or more, with eyes at each end for attaching pulling cables. The eye shall be suitably backed with flange or heavy washer such that a pull exerted on the opposite end of the shaft shall produce compression throughout the remote end of the ball, cylinder or circular section. Circular sections shall be so spaced that the distance from the external faces of the front and back sections shall equal or exceed the diameter of the circular section. Failure of the ball, cylinder, or circular section to pass freely through a pipe run, either by being pulled through or by being flushed through with water, shall be cause for rejection of that run. When a deflection device is used for the test in lieu of the ball, cylinder, or circular sections described, such device shall be approved prior to use. The device shall be sensitive to 1.0 percent of the diameter of the pipe being measured and shall be accurate to 1.0 percent of the indicated dimension. Installed pipe showing deflections greater than 7.5 percent of the normal diameter of the pipe, or 5 percent for RTRP and RPMP, shall be retested by a run from the opposite direction. If the retest also fails, the suspect pipe shall be replaced at no cost to the Government.

3.2 CONCRETE CRADLE AND ENCASEMENT: The pipe shall be supported on a concrete cradle, or encased in concrete where indicated or directed.

3.3 WYE BRANCHES: Wye branches shall be installed where sewer connections are indicated or where directed. Cutting into piping for connections shall not be done except in special approved cases. When the connecting pipe cannot be adequately supported on undisturbed earth or tamped backfill, the pipe shall be encased in concrete backfill or supported on a concrete cradle as directed. Concrete required because of conditions resulting from faulty construction methods or negligence by the Contractor shall be installed at no additional cost to the Government. The installation of wye branches in an existing sewer shall be made by a method which does not damage the integrity of the existing sewer. One acceptable method consists of removing one pipe section, breaking off the upper half of the bell of the next lower section and half of the running bell of wye section. After placing the new section, it shall be rotated so that the broken half of the bell will be at the bottom. The two joints shall then be made with joint packing and cement mortar.

3.4 SEPTIC TANK

3.4.1 General: Concrete septic tanks shall be cast-in-place concrete and shall conform to ASTM C 94, compressive strength of 28 MPa (4000 psi) at 28 days.

Comply with Section 03300 — Cast-in-Place Structural Concrete as specified herein.

3.4.2 Joints: Construction joints not shown on the drawings shall be installed so as not to impair the strength and appearance of the structure, as acceptable to the Contracting Officer.

3.4.3 Waterproofing and Corrosion Control Coating: Apply specified waterproofing and corrosion control coating to the interior finish of the tank. Apply uniformly in 2-coat continuous operation by power-spray equipment in accordance with the manufacturer's directions.

3.4.4 Pipe Connections: Pipe connections shall be made using water stops, standard O-ring joints, special coupling or shall be made in accordance with the manufacturer's recommendations. The Contractor's proposed method of connection shall be approved prior to installation.

3.5 MANHOLES

3.5.1 General: Manholes shall be constructed of precast concrete manhole sections.

3.5.2 Steel Ladder: Ladder shall be adequately anchored to the wall by means of steel inserts spaced not more than 1850 mm (6 feet) apart vertically, and shall be installed to provide at least 150 mm (6 inches) of space between the wall and the rungs. The wall along the line of the ladder shall be vertical for its entire length.

3.5.3 Jointing, Plastering and Sealing: Mortar joints shall be completely filled and shall be smooth and free from surplus mortar on the inside of the manhole. Mortar and mastic joints between precast rings shall be full-bedded in jointing compound and shall be smoothed to a uniform surface on both the interior and exterior of the manhole. Installation of rubber gasket joints between precast rings shall be in accordance with the recommendations of the manufacturer.

3.5.4 Frames and Covers: Unless otherwise indicated, tops of frames and covers shall be set flush with finished grade in paved areas or 50 mm (2 inches) higher than finished grade in unpaved areas.

3.6 BUILDING CONNECTIONS: Building connections shall include the lines to and connection with the building waste drainage piping at a point approximately 1.5 m (5 feet) outside the building, unless otherwise indicated. Where building drain piping is not installed, the Contractor shall terminate the building connections approximately 1.5 m (5 feet) from the site of the building at a point and in a manner designated.

3.7 CLEANOUTS AND OTHER APPURTENANCES: Cleanouts and other appurtenances shall be installed where shown on the drawings or as directed by the Contracting Officer, and shall conform to the detail of the drawings.

-- End of Section --

INDEX

SECTION 03100

STRUCTURAL CONCRETE FORMWORK

Paragraph		Page
1.1	REFERENCES	03100 - 1
1.2	SUBMITTALS	03100 - 1
1.3	DESIGN	03100 - 1
1.4	STORAGE AND HANDLING	03100 - 1
2.1	FORM MATERIALS	03100 - 1
3.1	INSTALLATION	03100 - 2
3.2	CHAMFERING	03100 - 2
3.3	COATING	03100 - 2
3.4	REMOVAL OF FORMS	03100 - 2

SECTION 03100

STRUCTURAL CONCRETE FORMWORK

PART 1 GENERAL

1.1 REFERENCES: The publications listed below form a part of this specification to the extent referenced. The publications are referred to in the text by basic designation only.

AMERICAN CONCRETE INSTITUTE (ACI)

ACI 347R (1988) Guide to Formwork for Concrete

AMERICAN HARDBOARD ASSOCIATION (AHA)

AHA A135.4 (1982; R 1988) Basic Hardboard

AMERICAN SOCIETY FOR TESTING AND MATERIALS (ASTM)

ASTM C 578 (1992) Rigid, Cellular Polystyrene Thermal Insulation&\

DEPARTMENT OF COMMERCE (DOC)

DOC PS 1 (1983) Construction and Industrial Plywood

1.2 SUBMITTALS: Government approval is required for submittals with a "GA" designation; submittals having an "FIO" designation are for information only. The following shall be submitted in accordance with Section 01300 SUBMITTAL PROCEDURES:

SD-01 Data

Manufacturer's data including literature describing form materials, accessories, and form releasing agents.

Manufacturer's recommendation on method and rate of application of form releasing agents.

1.3 DESIGN: Formwork shall be designed in accordance with methodology of ACI 347R for anticipated loads, lateral pressures, and stresses. Forms shall be capable of producing a surface which meets the requirements of the class of finish specified in Section 03300 CONCRETE FOR BUILDING CONSTRUCTION. Forms shall be capable of withstanding the pressures resulting from placement and vibration of concrete.

1.4 STORAGE AND HANDLING: Fiber voids shall be stored above ground level in a dry location. Fiber voids shall be kept dry until installed and overlaid with concrete.

PART 2 PRODUCTS

2.1 FORM MATERIALS: Forms for Class B finished surfaces shall be plywood panels conforming to DOC PS 1, Grade B-B concrete form panels, Class I or II. Other form materials or liners may be used provided the smoothness and appearance of concrete produced will be equivalent to that produced by the plywood concrete form panels.

2.1.1 Forms For Class D Finish: Forms for Class D finished surfaces, except where concrete is placed against earth, shall be wood or steel or other approved concrete form material.

2.1.2 Form Ties: Form ties shall be factory-fabricated metal ties, shall be of the removable or internal disconnecting or snap-off type, and shall be of a design that will not permit form deflection and will not spall concrete upon removal. Solid backing shall be provided for each tie. Except where removable tie rods are used, ties shall not leave holes in the concrete surface less than 6 mm (1/4 inch) nor more than 25 mm (1 inch) deep and not more than 25 mm (1 inch) in diameter. Removable tie rods shall be not more than 38 mm (1-1/2 inches) in diameter.

2.1.3 Form Releasing Agents: Form releasing agents shall be commercial formulations that will not bond with, stain or adversely affect concrete surfaces. Agents shall not impair subsequent treatment of concrete surfaces depending upon bond or adhesion nor impede the wetting of surfaces to be cured with water or curing compounds.

PART 3 EXECUTION

3.1 INSTALLATION

3.1.1 Formwork: Forms shall be mortar tight, properly aligned and adequately supported to produce concrete surfaces meeting the surface requirements specified in Section 03300 CONCRETE FOR BUILDING CONSTRUCTION and conforming to construction tolerance given in TABLE 1. Where concrete surfaces are to have a Class B finish, joints in form panels shall be arranged as approved. Where forms for continuous surfaces are placed in successive units, care shall be taken to fit the forms over the completed surface so as to obtain accurate alignment of the surface and to prevent leakage of mortar. Forms shall not be reused if there is any evidence of surface wear and tear or defects which would impair the quality of the surface. Surfaces of forms to be reused shall be cleaned of mortar from previous concreting and of all other foreign material before reuse. Form ties that are to be completely withdrawn shall be coated with a nonstaining bond breaker.

3.2 CHAMFERING: Except as otherwise shown, external corners that will be exposed shall be chamfered, beveled, or rounded by moldings placed in the forms.

3.3 COATING: Forms for Class B finished surfaces shall be coated with a form releasing agent before the form or reinforcement is placed in final position. The coating shall be used as recommended in the manufacturer's printed or written instructions. Surplus coating on form surfaces and coating on reinforcing steel and construction joints shall be removed before placing concrete.

3.4 REMOVAL OF FORMS: Forms shall be removed in a manner that will prevent injury to the concrete and ensure the complete safety of the structure. Formwork for columns,walls, side of beams and other parts not supporting the weight of concrete may be removed when the concrete has attained sufficient strength to resist damage from the removal operation but not before at least 24 hours has elapsed since concrete placement. Supporting forms and shores shall not be removed from beams, floors and walls until the structural units are strong enough to carry their own weight and any other construction or natural loads. In no case will supporting forms or shores be removed before the concrete strength has reached 70 percent of design strengths as determined by field cured cylinders or other approved methods. This strength shall be demonstrated by job-cured test specimens, and by a structural analysis considering the proposed loads in relation to these test strengths and the strength of forming and shoring system. The job-cured test specimens for form removal purposes shall be provided in numbers as directed and shall be in addition to those required for concrete quality control. The specimens shall be removed from molds at the age of 24 hours and shall receive, insofar as possible, the same curing and protection as the structures they represent.

TABLE 1 TOLERANCES FOR FORMED SURFACES		
1. Variations from the plumb:	In any 10 feet of length:	1/4”
a) In the lines and surfaces of columns, piers, walls and in arises	Maximum for entire length:	1”
b) For exposed corner columns, control-joint grooves, and other conspicuous lines	In any20 feet of length:	1/4”
	Maximum for entire length:	1/2”
2. Variation from the level or from the grades indicated on the drawings:	In any 10 feet of length:	1/4”
	In any bay or in any 20 feet of length:	3/8”
a) In slab soffits, ceilings, beam soffits, and in arises, mearured before removal of supporting shoes:	Maximum for entire length:	3/4”
b) In exposed lintels, sills, parapets, horizontal grooves, and other conspicuous lines:	In any bay or in any 20 feet of length:	1/4”
	Maximum for entire length:	1/2”
3. Variation of the linear building lines from established position in plan:	In any 20 feet:	1/2”
	Maximum:	1”
4. Variation of distance between walls, columns, partitions	1/4” per 10 feet of distance, but not more than 1/2” in any one bay, and not more than 1” total variation	
5. Variation in the sizes and locations of sleeves, floor openings, and wall opening	Minus	1/4”
	Plus	1/2”
6. Variation in cross-sectional dimensions of columns and beams in the thickness of slabs and walls	Minus	1/4”
	Plus	1/2”
7. Footings:		
a) Variation of dimensions in plan:	Minus:	1/2”
	Plus:	2”
	when formed or plus 3” when placed against unformed excavation	
b) Misplacement of eccentricity:	2 percent of the footing width in the direction of misplacement but not more than:	2”
c) Reduction in thickness:	Minus:	5%
	or specified thickness	
8. Variation in steps:	Riser:	1/8”
a) In a flight of stairs:	Tread:	1/4”
b) In consectutive steps:	Riser:	1/16”
	Tread:	1/8”

-- End of Section --

INDEX

SECTION 03200

CONCRETE REINFORCEMENT

Paragraph		Page
1.1	REFERENCES	03200 - 1
1.2	SUBMITTALS	03200 - 1
1.3	QUALIFICATIONS	03200 - 2
1.4	DELIVERY AND STORAGE	03200 - 2
2.1	REINFORCING STEEL	03200 - 2
2.2	WELDED WIRE FABRIC	03200 - 2
2.3	WIRE TIES	03200 - 2
2.4	SUPPORTS	03200 - 2
3.1	REINFORCEMENT	03200 - 2
3.2	WELDED-WIRE FABRIC	03200 - 3

SECTION 03200

CONCRETE REINFORCEMENT

PART 1 GENERAL

1.1 REFERENCES

The publications listed below form a part of this specification to the extent referenced. The publications are referred to in the text by basic designation only.

ACI INTERNATIONAL (ACI)

ACI 318/318R (1989; Rev 1992; Errata) Building Code Requirements for Reinforced Concrete

AMERICAN SOCIETY FOR TESTING AND MATERIALS (ASTM)

ASTM A 82 (1994) Steel Wire, Plain, for Concrete Reinforcement

ASTM A 185 (1994) Steel Welded Wire Fabric, Plain, for Concrete Reinforcement

ASTM A 615 (1994) Deformed and Plain Billet-Steel Bars for Concrete Reinforcement

ASTM A 706 (1993a) Low-Alloy Steel Deformed Bars for Concrete Reinforcement

AMERICAN WELDING SOCIETY (AWS)

AWS D1.4 (1992) Structural Welding Code - Reinforcing Steel

CONCRETE REINFORCING STEEL INSTITUTE (CRSI)

CRSI MSP-1 (1990) Manual of Standard Practice

1.2 SUBMITTALS

Government approval is required for submittals with a "GA" designation; submittals having an "FIO" designation are for information only. The following shall be submitted in accordance with Section 01300 SUBMITTAL PROCEDURES:

SD-04 Drawings

Concrete Reinforcement System; GA.

Detail drawings showing reinforcing steel schedules, sizes, grades, and splicing and bending details. Drawings shall show support details including types, sizes and spacing.

SD-08 Statements

Qualifications; GA.

A list of names of qualified welders.

SD-13 Certificates

Reinforcing Steel; GA.

Certified copies of mill reports attesting that the reinforcing steel furnished meets the requirements specified, prior to the installation of reinforcing steel.

1.3 QUALIFICATIONS

Welders shall be qualified in accordance with AWS D1.4. Qualification test shall be performed at the worksite and the Contractor shall notify the Contracting Officer 24 hours prior to conducting tests. Special welding procedures and welders qualified by others may be accepted as permitted by AWS D1.4.

1.4 DELIVERY AND STORAGE

Reinforcement and accessories shall be stored off the ground on platforms, skids, or other supports.

PART 2 PRODUCTS

2.1 REINFORCING STEEL

Reinforcing steel shall be deformed bars conforming to ASTM A 615 or ASTM A 706, grades and sizes as indicated. Cold drawn wire used for spiral reinforcement shall conform to ASTM A 82.

2.2 WELDED WIRE FABRIC

Welded wire fabric shall conform to ASTM A 185 or ASTM A 497.

2.3 WIRE TIES

Wire ties shall be 16 gauge or heavier black annealed steel wire.

2.4 SUPPORTS

Bar supports for formed surfaces shall be designed and fabricated in accordance with CRSI MSP-1 and shall be steel or precast concrete blocks. Precast concrete blocks shall have wire ties and shall be not less than 100 by 100 mm (4 by 4 inches) (4 inches square) when supporting reinforcement on ground. Precast concrete block shall have compressive strength equal to that of the surrounding concrete. Where concrete formed surfaces will be exposed to weather or where surfaces are to be painted, steel supports within 13 mm (1/2 inch) of concrete surface shall be galvanized, plastic protected or of stainless steel. Concrete supports used in concrete exposed to view shall have the same color and texture as the finish surface. For slabs on grade, supports shall be precast concrete blocks, plastic coated steel fabricated with bearing plates, or specifically designed wire-fabric supports fabricated of plastic.

PART 3 EXECUTION

3.1 REINFORCEMENT

Reinforcement shall be fabricated to shapes and dimensions shown and shall conform to the requirements of ACI 318/318R. Reinforcement shall be cold bent unless otherwise authorized. Bending may be accomplished in the field or at the mill. Bars shall not be bent after embedment in concrete. Safety caps shall be placed on all exposed ends of vertical concrete reinforcement bars that pose a danger to life safety. Wire tie ends shall face away from the forms.

3.1.1 Placement

Reinforcement shall be free from loose rust and scale, dirt, oil, or other deleterious coating that could reduce bond with the concrete. Reinforcement shall be placed in accordance with ACI 318/318R at locations shown plus or minus one bar diameter. Reinforcement shall not be continuous through expansion joints and shall be as indicated through construction or contraction joints. Concrete coverage shall be as indicated or as required by ACI 318/318R. If bars are moved more than one bar diameter to avoid interference with other reinforcement, conduits or embedded items, the resulting arrangement of bars, including additional bars required to meet structural requirements, shall be approved before concrete is placed.

3.1.2 Splicing

Splices of reinforcement shall conform to ACI 318/318R and shall be made only as required or indicated. Splicing shall be by lapping or by mechanical or welded butt connection; except that lap splices shall not be used for bars larger than No. 11 unless otherwise indicated. Welding shall conform to AWS D1.4. Welded butt splices shall be full penetration butt welds. Lapped bars shall be placed in contact and securely tied or spaced transversely apart to permit the embedment of the entire surface of each bar in concrete. Lapped bars shall not be spaced farther apart than one-fifth the required length of lap or 150 mm. (6 inches.) Mechanical butt splices shall be in accordance with the recommendation of the manufacturer of the mechanical splicing device. Butt splices shall develop 125 percent of the specified minimum yield tensile strength of the spliced bars or of the smaller bar in transition splices. Bars shall be flame dried before butt splicing. Adequate jigs and clamps or other devices shall be provided to support, align, and hold the longitudinal centerline of the bars to be butt spliced in a straight line.

3.2 WELDED-WIRE FABRIC

Welded-wire fabric shall be placed in slabs as indicated. Fabric placed in slabs on grade shall be continuous between expansion, construction, and contraction joints. Fabric placement at joints shall be as indicated. Lap splices shall be made in such a way that the overlapped area equals the distance between the outermost crosswires plus 50 mm. (2 inches.) Laps shall be staggered to avoid continuous laps in either direction. Fabric shall be wired or clipped together at laps at intervals not to exceed 1.22 m. (4 feet.) Fabric shall be positioned by the use of supports.

-- End of Section --

INDEX

SECTION 03300

CAST-IN-PLACE STRUCTURAL CONCRETE

Paragraph		Page
1.1	REFERENCES	03300 - 1
1.2	UNIT PRICE CONTRACT	03300 - 3
1.3	LUMP SUM CONTRACT	03300 - 3
1.4	SUBMITTALS	03300 - 3
1.5	QUALIFICATIONS	03300 - 4
1.6	GENERAL REQUIREMENTS	03300 - 4
1.7	MIXTURE PROPORTIONS	03300 - 7
1.8	STORAGE OF MATERIALS	03300 - 9
1.9	GOVERNMENT ASSURANCE INSPECTION & TESTING	03300 - 9
2.1	CEMENTITIOUS MATERIALS	03300 - 10
2.2	AGGREGATES	03300 - 10
2.3	CHEMICAL ADMIXTURES	03300 - 10
2.4	CURING MATERIALS	03300 - 11
2.5	WATER	03300 - 12
2.6	NONSHRINK GROUT	03300 - 12
2.7	LATEX BONDING AGENT	03300 - 12
2.8	EPOXY RESIN	03300 - 12
2.9	EMBEDDED ITEMS	03300 - 12
2.10	FLOOR HARDENER	03300 - 12
2.11	VAPOR BARRIER	03300 - 12
2.12	JOINT MATERIALS	03300 - 12
3.1	PREPARATION FOR PLACING	03300 - 13
3.2	CONCRETE PRODUCTION	03300 - 15
3.3	TRANSPORTING CONCRETE TO PROJECT SITE	03300 - 17
3.4	CONVEYING CONCRETE ON SITE	03300 - 17
3.5	PLACING CONCRETE	03300 - 18
3.6	JOINTS	03300 - 21
3.7	FINISHING FORMED SURFACES	03300 - 22
3.8	REPAIRS	03300 - 22
3.9	FINISHING UNFORMED SURFACES	03300 - 24
3.10	CURING AND PROTECTION	03300 - 25
3.11	SETTING BASE PLATES AND BEARING PLATES	03300 - 27
3.12	TESTING AND INSP. FOR CONTRACTOR QUALITY CONTROL	03300 - 27

SECTION 03300

CAST-IN-PLACE STRUCTURAL CONCRETE

PART 1 GENERAL

1.1 REFERENCES

The publications listed below form a part of this specification to the extent referenced. The publications are referred to in the text by basic designation only.

AMERICAN ASSOCIATION OF STATE HIGHWAY AND TRANSPORTATION OFFICIALS (AASHTO)

AASHTO M 182 (1991I) Burlap Cloth Made From Jute or Kenaf

AMERICAN CONCRETE INSTITUTE (ACI)

ACI 117/A117R (1990; Errata) Standard Tolerances for Concrete Construction and Materials

ACI 211.1 (1991) Standard Practice for Selecting Proportions for Normal, Heavyweight, and Mass Concrete

ACI 214.3R (1988) Simplified Version of the Recommended Practice for Evaluation of Strength Test Results of Concrete

ACI 301 (1989) Structural Concrete for Buildings

ACI 303R (1991) Guide to Cast-In-Place Architectural Concrete Practice

ACI 305R (1991) Hot Weather Concreting

ACI 318/318R (1989; Rev 1992; Errata) Building Code Requirements for Reinforced Concrete

AMERICAN SOCIETY FOR TESTING AND MATERIALS (ASTM)

ASTM C 31 (1991) Making and Curing Concrete Test Specimens in the Field

ASTM C 33 (1993) Concrete Aggregates

ASTM C 39 (1993a) Compressive Strength of Cylindrical Concrete Specimens

ASTM C 94 (1994) Ready-Mixed Concrete

ASTM C 136 (1993) Sieve Analysis of Fine and Coarse Aggregates

ASTM C 143 (1990a) Slump of Hydraulic Cement Concrete

ASTM C 150 (1994) Portland Cement

ASTM C 171 (1992) Sheet Materials for Curing Concrete

ASTM C 172 (1990) Sampling Freshly Mixed Concrete

ASTM C 173 (1994a) Air Content of Freshly Mixed Concrete by the Volumetric Method

ASTM C 192 (1990a) Making and Curing Concrete Test Specimens in the Laboratory

ASTM C 260 (1994) Air-Entraining Admixtures for Concrete

ASTM C 309 (1993) Liquid Membrane-Forming Compounds for Curing Concrete

ASTM C 494 (1992) Chemical Admixtures for Concrete

ASTM C 595 (1994a) Blended Hydraulic Cements

ASTM C 685 (1994) Concrete Made by Volumetric Batching and Continuous Mixing

ASTM C 881 (1990) Epoxy-Resin-Base Bonding Systems for Concrete

ASTM C 937 (1980, R 1991) Grout Fluidifier for Preplaced-Aggregate Concrete

ASTM C 940 (1989) Expansion and Bleeding of Freshly Mixed Grouts for Preplaced-Aggregate Concrete in the Laboratory

ASTM C 1017 (1992) Chemical Admixtures for Use in Producing Flowing Concrete

ASTM C 1077 (1995) Standard Practice for Laboratories Testing Concrete and Concrete Aggregates for Use in Construction and Criteria for Laboratory Evaluation

ASTM C 1107 (1991a) Packaged Dry, Hydraulic-Cement Grout (Nonshrink)

ASTM D 75 (1987; R 1992) Sampling Aggregates

ASTM D 1751 (1983; R 1991) Preformed Expansion Joint Filler for Concrete Paving and Structural Construction (Nonextruding and Resilient Bituminous Types)

ASTM D 1752 (1984; R 1992) Preformed Sponge Rubber and Cork Expansion Joint Fillers for Concrete Paving and Structural Construction

ASTM E 96 (1994) Water Vapor Transmission of Materials

ASTM E 1155 (1987) Determining Floor Flatness and Levelness Using the F-Number System

CORPS OF ENGINEERS (COE)

COE CRD-C 94 (1995) Surface Retarders

COE CRD-C 104 (1980) Method of Calculation of the Fineness Modulus of Aggregate

COE CRD-C 400 (1963) Requirements for Water for Use in Mixing or Curing Concrete

COE CRD-C 521 (1981) Standard Test Method for Frequency and Amplitude of Vibrators for Concrete

COE CRD-C 540 (1971; R 1981) Standard Specification for Nonbituminous Inserts for Contraction Joints in Portland Cement Concrete Airfield Pavements, Sawable Type

COE CRD-C 572 (1974) Corps of Engineers Specifications for Polyvinylchloride Waterstop

NATIONAL INSTITUTE OF STANDARDS AND TECHNOLOGY (NIST)

NIST HB 44 (1994) NIST Handbook 44: Specifications, Tolerances, and Other Technical Requirements for Weighing and Measuring Devices

NATIONAL READY-MIXED CONCRETE ASSOCIATION (NRMCA)

NRMCA-01 (1992) Truck Mixer Agitator and Front Discharge Concrete Carrier Standards of the Truck Mixer Manufacturers Bureau

NRMCA CPMB 100 (1990) Concrete Plant Standards

NRMCA QC 3 (1984) Quality Control Manual: Section 3, Plant Certifications Checklist: Certification of Ready Mixed Concrete Production Facilities

1.2 UNIT PRICE CONTRACT

1.2.1 Measurement

Measurement of concrete for payment will be made on the basis of the actual volume within the pay lines of the structure as indicated on the contract drawings. Measurement for payment of concrete placed against the sides of any excavation without intervening forms will be made only within the pay lines of the structure as shown on the contract drawings. No deductions will be made for rounded or beveled edges, for space occupied by metal work, for conduits, for voids, or for embedded items which are less than 0.15 cubic meters (5 cubic feet) in volume or 0.09 square meters (1 square foot) in cross section.

1.2.2 Payment

Unless otherwise specified, payment for concrete will be made at the respective unit prices per cubic meter (yard) for the various items of the schedule, measured as specified above, which price shall include the cost of all labor, materials, and the use of equipment and tools required to complete the concrete work, except for any reinforcement and embedded parts specified to be paid separately. Unit price payment will not be made for concrete placed in structures for which payment is made as a lump sum.

1.3 LUMP SUM CONTRACT

Under this type of contract concrete items will be paid for by lump sum and will not be measured. The work covered by these items consists of furnishing all concrete materials, reinforcement, miscellaneous embedded materials, and equipment, and performing all labor for the forming, manufacture, transporting, placing, finishing, curing, and protection of concrete in these structures.

1.4 SUBMITTALS

Government approval is required for submittals with a "GA" designation; submittals having an "FIO" designation are for information only. The following shall be submitted in accordance with Section 01300 SUBMITTAL PROCEDURES:

SD-08 Statements

Mixture Proportions; GA.

The results of trial mixture design studies along with a statement giving the maximum nominal coarse aggregate size and the proportions of ingredients that will be used in the manufacture of each strength or class of concrete, at least 14 days prior to commencing concrete placing operations. Aggregate weights shall be based on the saturated surface dry condition. The statement shall be accompanied by test results from an approved independent commercial testing laboratory, showing that mixture design studies have been made with materials proposed for the project and that the proportions selected will produce concrete of the qualities indicated. No substitutions shall be made in the materials used in the mixture design studies without additional tests to show that the quality of the concrete is satisfactory.

SD-09 Reports

Testing and Inspection for Contractor Quality Control; GA.

Certified copies of laboratory test reports, including mill tests and all other test data, for portland cement, blended cement, pozzolan, ground granulated blast furnace slag, silica fume, aggregate, admixtures, and curing compound proposed for use on this project.

SD-13 Certificates

Qualifications; GA.

Written documentation for Contractor Quality Control personnel.

1.5 QUALIFICATIONS

Contractor Quality Control personnel assigned to concrete construction shall be American Concrete Institute (ACI) Certified Workmen in one of the following grades or shall have written evidence of having completed similar qualification programs:

Concrete Field Testing Technician, Grade I
Concrete Laboratory Testing Technician, Grade I or II
Concrete Construction Inspector, Level II

The foreman or lead journeyman of the flatwork finishing crew shall have similar qualification for ACI Concrete Flatwork Technician/Finisher or equal, with written documentation.

1.6 GENERAL REQUIREMENTS

1.6.1 Tolerances

Except as otherwise specified herein, tolerances for concrete batching, mixture properties, and construction as well as definition of terms and application practices shall be in accordance with ACI 117/A117R. Level and grade tolerance measurements of slabs shall be made as soon as possible after finishing; when forms or shoring are used, the measurements shall be made prior to removal.

1.6.1.1 Floors

For the purpose of this Section the following terminology correlation between ACI 117/A117R and this Section shall apply:

Floor Profile Quality Classification from ACI 117/A117R	This Section
Conventional Bullfloated	Same
Conventional Straightedged	Same
Flat	Float Finish or Trowel Finish
Very Flat	Same. Use only with F-system

Levelness tolerance shall not apply where design requires floors to be sloped to drains or sloped for other reasons.

1.6.1.2 Floors by the Straightedge System

The flatness of the floors shall be carefully controlled and the tolerances shall be measured by the straightedge system as specified in paragraph 4.5.7 of ACI 117/A117R, using a 3 m (10 foot) straightedge, within 72 hours after floor slab installation and before shores and/or forms are removed. The listed tolerances shall be met at any and every location at which the straightedge can be placed.

All slabs: ± 3mm in 3m

1.6.2 Strength Requirements and w/c Ratio

1.6.2.1 Strength Requirements

Specified compressive strength (f'c) shall be as follows:

COMPRESSIVE STRENGTH	STRUCTURE OR PORTION OF STRUCTURE
27.5 MPa (4000 psi) at 28 days	All concrete

Compressive strength shall be determined in accordance with ASTM C 39. Flexural strength shall be determined in accordance with ASTM C 78.

a. Evaluation of Concrete Compressive Strength. Compressive strength specimens (152 by 305 mm (6 by 12 inch) cylinders) shall be fabricated by the Contractor and laboratory cured in accordance with ASTM C 31 and tested in accordance with ASTM C 39. The strength of the concrete will be considered satisfactory so long as the average of all sets of three consecutive test results equals or exceeds the specified compressive strength f'c and no individual test result falls below the specified strength f'c by more than 3.5 MPa. (500 psi.) A "test" is defined as the average of two companion cylinders, or if only one cylinder is tested, the results of the single cylinder test. Additional analysis or testing, including taking cores and/or load tests may be required at the Contractor's expense when the strength of the concrete in the structure is considered potentially deficient.

b. Investigation of Low-Strength Compressive Test Results. When any strength test of standard-cured test cylinders falls below the specified strength requirement by more than 3.5 MPa (500 psi) or if tests of field-cured cylinders indicate deficiencies in protection and curing, steps shall be taken to assure that the load-carrying capacity of the structure is not jeopardized. When the strength of concrete in place is considered potentially deficient, cores shall be obtained and tested in accordance with ASTM C 42. At least three representative cores shall be taken from each member or area of concrete in place that is considered potentially deficient. The location of cores will be determined by the Contracting Officer to least impair the strength of the structure. Concrete in the area represented by the core testing will be considered adequate if the average strength of the cores is equal to at least 85 percent of the specified strength requirement and if no single core is less than 75 percent of the specified strength requirement.

Non-destructive tests (tests other than test cylinders or cores) shall not be used as a basis for acceptance or rejection. The Contractor shall perform the coring and repair the holes. Cores will be tested by the Government.

c. Load Tests. If the core tests are inconclusive or impractical to obtain or if structural analysis does not confirm the safety of the structure, load tests may be directed by the Contracting Officer in accordance with the requirements of ACI 318/318R. Concrete work evaluated by structural analysis or by results of a load test as being understrength shall be corrected in a manner satisfactory to the Contracting Officer. All investigations, testing, load tests, and correction of deficiencies shall be performed by and at the expense of the Contractor and must be approved by the Contracting Officer, except that if all concrete is found to be in compliance with the drawings and specifications, the cost of investigations, testing, and load tests will be at the expense of the Government.

1.6.2.2 Water-Cement Ratio

Maximum water-cement ratio (w/c) for normal weight concrete shall be as follows:

WATER-CEMENT RATIO, BY WEIGHT	STRUCTURE OR PORTION OF STRUCTURE
0.45	Slabs - supported and on grade
0.55	All other concrete

These w/c's may cause higher strengths than that required above for compressive strength. The maximum w/c required will be the equivalent w/c as determined by conversion from the weight ratio of water to cement plus pozzolan, silica fume, and ground granulated blast furnace slag (GGBF slag) by the weight equivalency method as described in ACI 211.1. In the case where silica fume or GGBF slag is used, the weight of the silica fume and GGBF slag shall be included in the equations of ACI 211.1 for the term P which is used to denote the weight of pozzolan.

1.6.3 Air Entrainment

All normal weight concrete shall be air entrained to contain between 4 and 7 percent total air, except that when the nominal maximum size coarse aggregate is 19 mm (3/4 inch) or smaller it shall be between 4.5 and 7.5 percent. Concrete with specified strength over 35 MPa (5000 psi) may have 1.0 percent less air than specified above. Specified air content shall be attained at point of placement into the forms. Air content for normal weight concrete shall be determined in accordance with ASTM C 231.

1.6.4 Slump

Slump of the concrete, as delivered to the point of placement into the forms, shall be within the following limits. Slump shall be determined in accordance with ASTM C 143.

Structural Element	Slump	
	Minimum	Maximum
Foundation walls, substructure walls, footings, slabs	25mm (1 in.)	75mm (3 in.)
Any structural concrete approved for placement by pumping:		
At pump	50mm (2 in.)	150mm (6 in.)
At discharge of line	25mm (1 in.)	100mm (4 in.)

When use of a plasticizing admixture conforming to ASTM C 1017 or when a Type F or G high range water reducing admixture conforming to ASTM C 494 is permitted to increase the slump of concrete, concrete shall have a slump of 50 to 100 mm (2 to 4 inches) before the admixture is added and a maximum slump of 200 mm (8 inches) at the point of delivery after the admixture is added

1.6.5 Concrete Temperature

The temperature of the concrete as delivered shall not exceed 32 degrees C. (90 degrees F.) When the ambient temperature during placing is 5 degrees C (40 degrees F) or less, or is expected to be at any time within 6 hours after placing, the temperature of the concrete as delivered shall be between 12 and 25 degrees C. (55 and 75 degrees F.)

1.6.6 Size of Coarse Aggregate

The largest feasible nominal maximum size aggregate (NMSA) specified in paragraph AGGREGATES shall be used in each placement. However, nominal maximum size of aggregate shall not exceed any of the following: three-fourths of the minimum cover for reinforcing bars, three-fourths of the minimum clear spacing between reinforcing bars, one-fifth of the narrowest dimension between sides of forms, or one-third of the thickness of slabs or toppings.

1.6.7 Special Properties and Products

Concrete may contain admixtures other than air entraining agents, such as water reducers, superplasticizers, or set retarding agents to provide special properties to the concrete, if specified or approved. Any of these materials to be used on the project shall be used in the mix design studies.

1.7 MIXTURE PROPORTIONS

Concrete shall be composed of portland cement, other cementitious and pozzolanic materials as specified, aggregates, water and admixtures as specified.

1.7.1 Proportioning Studies for Normal Weight Concrete

Trial design batches, mixture proportioning studies, and testing requirements for various classes and types of concrete specified shall be the responsibility of the Contractor. Except as specified for flexural strength concrete, mixture proportions shall be based on compressive strength as determined by test specimens fabricated in accordance with ASTM C 192 and tested in accordance with ASTM C 39. Samples of all materials used in mixture proportioning studies shall be representative of those proposed for use in the project and shall be accompanied by the manufacturer's or producer's test reports indicating compliance with these specifications. Trial mixtures having proportions, consistencies, and air content suitable for the work shall be made based on methodology described in ACI 211.1, using at least three different water-cement ratios for each type of mixture, which will produce a range of strength encompassing those required for each class and type of concrete required on the project. The maximum water-cement ratios required in the paragraph Maximum Allowable w/c Ratio will be the equivalent water-cement ratio as determined by conversion from the weight ratio of water to cement plus pozzolan, silica fume, and ground granulated blast furnace slag (GGBF slag) by the weight equivalency method as described in ACI 211.1. In the case where silica fume or GGBF slag is used, the weight of the silica fume and GGBF slag shall be included in the equations in ACI 211.1 for the term P, which is used to denote the weight of pozzolan. If pozzolan is used in the concrete mixture, the minimum pozzolan content shall be 15 percent by weight of the total cementitious material, and the maximum shall be 35 percent. Laboratory trial mixtures shall be designed for maximum permitted slump and air content. Separate sets of trial mixture studies shall be made for each combination of cementitious materials and each combination of admixtures proposed for use. No combination of either shall be used until proven by such studies, except that, if approved in writing and otherwise permitted by these specifications, an accelerator or a retarder

may be used without separate trial mixture study. Separate trial mixture studies shall also be made for concrete for any conveying or placing method proposed which requires special properties and for concrete to be placed in unusually difficult placing locations. The temperature of concrete in each trial batch shall be reported. For each water-cement ratio, at least three test cylinders for each test age shall be made and cured in accordance with ASTM C 192. They shall be tested at 7 and 28 days in accordance with ASTM C 39. From these test results, a curve shall be plotted showing the relationship between water-cement ratio and strength for each set of trial mix studies. In addition, a curve shall be plotted showing the relationship between 7 day and 28 day strengths. Each mixture shall be designed to promote easy and suitable concrete placement, consolidation and finishing, and to prevent segregation and excessive bleeding.

1.7.2 Average Compressive Strength Required for Mixtures

The mixture proportions selected during mixture design studies shall produce a required average compressive strength (f'cr) exceeding the specified compressive strength (f'c) by the amount indicated below. This required average compressive strength, f'cr, will not be a required acceptance criteria during concrete production. However, whenever the daily average compressive strength at 28 days drops below f'cr during concrete production, or daily average 7-day strength drops below a strength correlated with the 28-day f'cr, the mixture shall be adjusted, as approved, to bring the daily average back up to f'cr. During production, the required f'cr shall be adjusted, as appropriate, based on the standard deviation being attained on the job.

1.7.2.1 Computations from Test Records

Where a concrete production facility has test records, a standard deviation shall be established in accordance with the applicable provisions of ACI 214.3R. Test records from which a standard deviation is calculated shall represent materials, quality control procedures, and conditions similar to those expected; shall represent concrete produced to meet a specified strength or strengths (f'c) within 7 MPa (1,000 psi) of that specified for proposed work; and shall consist of at least 30 consecutive tests. A strength test shall be the average of the strengths of two cylinders made from the same sample of concrete and tested at 28 days. Required average compressive strength f'cr used as the basis for selection of concrete proportions shall be the larger of the equations that follow using the standard deviation as determined above:

$$f'cr = f'c + 1.34S$$

$$f'cr = f'c + 2.33S - 500$$

Where S = standard deviation

Where a concrete production facility does not have test records meeting the requirements above but does have a record based on 15 to 29 consecutive tests, a standard deviation shall be established as the product of the calculated standard deviation and a modification factor from the following table:

NUMBER OF TESTS	MODIFICATION FACTOR FOR STANDARD DEVIATION
15	1.16
20	1.08
25	1.03
30 or more	1.00

1.7.2.2 Computations without Previous Test Records

When a concrete production facility does not have sufficient field strength test records for calculation of the standard deviation, the required average strength f'cr shall be determined as follows:

a. If the specified compressive strength f'c is less than 20 MPa, (3,000 psi,)

f'cr = f'c + 6.9 MPa (f'cr = f'c + 1000 psi)

b. If the specified compressive strength f'c is 20 to 35 MPa, (3,000 to 5,000 psi,)

f'cr = f'c + 8.3 MPa (f'cr = f'c + 1,200 psi)

c. If the specified compressive strength f'c is over 35 MPa, (5,000 psi,)

f'cr = f'c + 9.7 MPa (f'cr = f'c + 1,400 psi)

1.7.3 Average Flexural Strength Required for Mixtures

The mixture proportions selected during mixture design studies for flexural strength mixtures and the mixture used during concrete production shall be designed and adjusted during concrete production as approved, except that the overdesign for average flexural strength shall simply be 15 percent greater than the specified flexural strength at all times.

1.8 STORAGE OF MATERIALS

Cement and other cementitious materials shall be stored in weathertight buildings, bins, or silos which will exclude moisture and contaminants and keep each material completely separated. Aggregate stockpiles shall be arranged and used in a manner to avoid excessive segregation and to prevent contamination with other materials or with other sizes of aggregates. Aggregate shall not be stored directly on ground unless a sacrificial layer is left undisturbed. Reinforcing bars and accessories shall be stored above the ground on platforms, skids or other supports. Other materials shall be stored in such a manner as to avoid contamination and deterioration. Admixtures which have been in storage at the project site for longer than 6 months or which have been subjected to freezing shall not be used unless retested and proven to meet the specified requirements. Materials shall be capable of being accurately identified after bundles or containers are opened.

1.9 GOVERNMENT ASSURANCE INSPECTION AND TESTING

Day-to day inspection and testing shall be the responsibility of the Contractor Quality Control (CQC) staff. However, representatives of the Contracting Officer can and will inspect construction as considered appropriate and will monitor operations of the Contractor's CQC staff. Government inspection or testing will not relieve the Contractor of any of his CQC responsibilities.

1.9.1 Materials

The Government will sample and test aggregates, cementitious materials, other materials, and concrete to determine compliance with the specifications as considered appropriate. The Contractor shall provide facilities and labor as may be necessary for procurement of representative test samples. Samples of aggregates will be obtained at the point of batching in accordance with ASTM D 75. Other materials will be sampled from storage at the jobsite or from other locations as considered appropriate. Samples may be placed in storage for later testing when appropriate.

1.9.2 Fresh Concrete

Fresh concrete will be sampled as delivered in accordance with ASTM C 172 and tested in accordance with these specifications, as considered necessary.

1.9.3 Hardened Concrete

Tests on hardened concrete will be performed by the Government when such tests are considered necessary.

1.9.4 Inspection

Concrete operations may be tested and inspected by the Government as the project progresses. Failure to detect defective work or material will not prevent rejection later when a defect is discovered nor will it obligate the Government for final acceptance.

PART 2 PRODUCTS

2.1 CEMENTITIOUS MATERIALS

Cementitious Materials shall be portland cement, or portland cement in combination with pozzolan and shall conform to appropriate specifications listed below. Use of cementitious materials in concrete which will have surfaces exposed in the completed structure shall be restricted so there is no change in color, source, or type of cementitious material.

2.1.1 Portland Cement

ASTM C 150, Type I low alkali with a maximum 15 percent amount of tricalcium aluminate.

2.1.2 Pozzolan (Fly Ash)

ASTM C 618, Class C with the optional requirements for multiple factor, drying shrinkage, and uniformity from Table 2A of ASTM C 618. Requirement for maximum alkalies from Table 1A of ASTM C 618 shall apply. If pozzolan is used, it shall never be less than 15 percent nor more than 35 percent by weight of the total cementitious material.

2.2 AGGREGATES

Aggregates shall conform to the following.

2.2.1 Fine Aggregate

Fine aggregate shall conform to the quality and gradation requirements of ASTM C 33.

2.2.2 Coarse Aggregate

Coarse aggregate shall conform to ASTM C 33, Class 5S, size designation 5.

2.3 CHEMICAL ADMIXTURES

Chemical admixtures, when required or permitted, shall conform to the appropriate specification listed. Admixtures shall be furnished in liquid form and of suitable concentration for easy, accurate control of dispensing.

2.3.1 Air-Entraining Admixture

ASTM C 260 and shall consistently entrain the air content in the specified ranges under field conditions.

2.3.2 Accelerating Admixture

ASTM C 494, Type C or E, except that calcium chloride or admixtures containing calcium chloride shall not be used.

2.3.3 Water-Reducing or Retarding Admixture

ASTM C 494, Type A, B, or D, except that the 6-month and 1-year compressive and flexural strength tests are waived.

2.3.4 High-Range Water Reducer

ASTM C 494, Type F or G, except that the 6-month and 1-year strength requirements are waived. The admixture shall be used only when approved in writing, such approval being contingent upon particular mixture control as described in the Contractor's Quality Control Plan and upon performance of separate mixture design studies.

2.3.5 Surface Retarder

COE CRD-C 94.

2.3.6 Expanding Admixture

Aluminum powder type expanding admixture conforming to ASTM C 937.

2.3.7 Other Chemical Admixtures

Chemical admixtures for use in producing flowing concrete shall comply with ASTM C 1017, Type I or II. These admixtures shall be used only when approved in writing, such approval being contingent upon particular mixture control as described in the Contractor's Quality Control Plan and upon performance of separate mixture design studies.

2.4 CURING MATERIALS

2.4.1 Impervious-Sheet

Impervious-sheet materials shall conform to ASTM C 171, type optional, except, that polyethylene sheet shall not be used.

2.4.2 Membrane-Forming Compound

Membrane-Forming curing compound shall conform to ASTM C 309, Type 1-D or 2, except that only a styrene acrylate or chlorinated rubber compound meeting Class B requirements shall be used for surfaces that are to be painted or are to receive bituminous roofing, or waterproofing, or floors that are to receive adhesive applications of resilient flooring. The curing compound selected shall be compatible with any subsequent paint, roofing, waterproofing, or flooring specified. Nonpigmented compound shall contain a fugitive dye, and shall have the reflective requirements in ASTM C 309 waived.

2.4.3 Burlap and Cotton Mat

Burlap and cotton mat used for curing shall conform to AASHTO M 182.

2.5 WATER

Water for mixing and curing shall be fresh, clean, potable, and free of injurious amounts of oil, acid, salt, or alkali, except that non-potable water may be used if it meets the requirements of COE CRD-C 400.

2.6 NONSHRINK GROUT

Nonshrink grout shall conform to ASTM C 1107 and shall be a commercial formulation suitable for the proposed application. Minimum compressive strength = 5000psi.

2.7 LATEX BONDING AGENT

Latex agents for bonding fresh to hardened concrete shall conform to ASTM C 1059.

2.8 EPOXY RESIN

Epoxy resins for use in repairs shall conform to ASTM C 881, Type V, Grade 2. Class as appropriate to the existing ambient and surface temperatures.

2.9 EMBEDDED ITEMS

Embedded items shall be of the size and type indicated or as needed for the application. Dovetail slots shall be galvanized steel. Hangers for suspended ceilings shall be as specified in Section 09510 ACOUSTICAL CEILINGS. Inserts for shelf angles and bolt hangers shall be of malleable iron or cast or wrought steel.

2.10 FLOOR HARDENER

Floor hardener shall be a colorless aqueous solution containing zinc silicofluoride, magnesium silicofluoride, or sodium silicofluoride. These silicofluorides can be used individually or in combination. Proprietary hardeners may be used if approved in writing by the Contracting Officer.

2.11 VAPOR BARRIER

Vapor barrier shall be polyethylene sheeting with a minimum thickness of 0.15 mm (6 mils) (6 mils) or other equivalent material having a vapor permeance rating not exceeding 30 nanograms per Pascal per second per square meter (0.5 perms) (0.5 perms) as determined in accordance with ASTM E 96.

2.12 JOINT MATERIALS

2.12.1 Joint Fillers, Sealers, and Waterstops

Expansion joint fillers shall be preformed materials conforming to [ASTM D 1751] [ASTM D 1752]. Materials for waterstops shall be in accordance with Section 03250 EXPANSION JOINTS, CONSTRUCTION JOINTS, AND WATERSTOPS. Materials for and sealing of joints shall conform to the requirements of Section [07920 JOINT SEALING] [02592 FIELD MOLDED SEALANTS FOR SEALING JOINTS IN RIGID PAVEMENTS] [02593 COMPRESSION JOINT SEALS FOR CONCRETE PAVEMENTS].

2.12.2 Contraction Joints in Slabs

Sawable type contraction joint inserts shall conform to COE CRD-C 540. Nonsawable joint inserts shall have sufficient stiffness to permit placement in plastic concrete without undue deviation from a straight line and shall conform to the physical requirements of COE CRD-C 540, with the exception of Section 3.4 "Resistance to Sawing". Plastic inserts shall be polyvinyl chloride conforming to the materials requirements of COE CRD-C 572.

PART 3 EXECUTION

3.1 PREPARATION FOR PLACING

Before commencing concrete placement, the following shall be performed. Surfaces to receive concrete shall be clean and free from frost, ice, mud, and water. Forms shall be in place, cleaned, coated, and adequately supported, in accordance with Section 03100 STRUCTURAL CONCRETE FORMWORK. Reinforcing steel shall be in place, cleaned, tied, and adequately supported, in accordance with Section 03200 CONCRETE REINFORCEMENT. Transporting and conveying equipment shall be in-place, ready for use, clean, and free of hardened concrete and foreign material. Equipment for consolidating concrete shall be at the placing site and in proper working order. Equipment and material for curing and for protecting concrete from weather or mechanical damage shall be at the placing site, in proper working condition and in sufficient amount for the entire placement. When hot, windy conditions during concreting appear probable, equipment and material shall be at the placing site to provide windbreaks, shading, fogging, or other action to prevent plastic shrinkage cracking or other damaging drying of the concrete.

3.1.1 Foundations

3.1.1.1 Concrete on Earth Foundations

Earth (subgrade, base, or subbase courses) surfaces upon which concrete is to be placed shall be clean, damp, and free from debris, frost, ice, and standing or running water. Prior to placement of concrete, the foundation shall be well drained and shall be satisfactorily graded and uniformly compacted.

3.1.1.3 Excavated Surfaces in Lieu of Forms

Concrete for footings may be placed directly against the soil provided the earth or rock has been carefully trimmed, is uniform and stable, and meets the compaction requirements of Section 02221 EXCAVATION, FILLING, AND BACKFILLING FOR BUILDINGS. The concrete shall be placed without becoming contaminated by loose material, and the outline of the concrete shall be within the specified tolerances.

3.1.2 Previously Placed Concrete

Concrete surfaces to which additional concrete is to be bonded shall be prepared for receiving the next horizontal lift by cleaning the construction joint surface with either air-water cutting, sandblasting, high-pressure water jet, or other approved method. Concrete at the side ofvertical construction joints shall be prepared as approved by the Contracting Officer. Air-water cutting shall not be used on formed surfaces or surfaces congested with reinforcing steel. Regardless of the method used, the resulting surfaces shall be free from all laitance and inferior concrete so that clean surfaces of well bonded coarse aggregate are exposed and make up at least 10-percent of the surface area, distributed uniformly throughout the surface. The edges of the coarse aggregate shall not be undercut. The surface of horizontal construction joints shall be kept continuously wet for the first 12 hours during the 24-hour period prior to placing fresh concrete. The surface shall be washed completely clean as the last operation prior to placing the next lift. For heavy duty floors and two-course floors a thin coat of neat cement grout of about the consistency of

thick cream shall be thoroughly scrubbed into the existing surface immediately ahead of the topping placing. The grout shall be a 1:1 mixture of portland cement and sand passing the 2.36 mm (No. 8) sieve. The topping concrete shall be deposited before the grout coat has had time to stiffen.

3.1.2.1 Air-Water Cutting

Air-water cutting of a fresh concrete surface shall be performed at the proper time and only on horizontal construction joints. The air pressure used in the jet shall be 700 kPa (100 psi) plus or minus, 70 kPa, (10 psi,) and the water pressure shall be just sufficient to bring the water into effective influence of the air pressure. When approved by the Contracting Officer, a surface retarder complying with the requirements of COE CRD-C 94 may be applied to the surface of the lift in order to prolong the period of time during which air-water cutting is effective. After cutting, the surface shall be washed and rinsed as long as there is any trace of cloudiness of the wash water. Where necessary to remove accumulated laitance, coatings, stains, debris, and other foreign material, high-pressure waterjet or sandblasting shall be used as the last operation before placing the next lift.

3.1.2.2 High-Pressure Water Jet

A stream of water under a pressure of not less than 20 MPa (3,000 psi) shall be used for cutting and cleaning. Its use shall be delayed until the concrete is sufficiently hard so that only the surface skin or mortar is removed and there is no undercutting of coarse-aggregate particles. If the waterjet is incapable of a satisfactory cleaning, the surface shall be cleaned by sandblasting.

3.1.2.3 Wet Sandblasting

Wet sandblasting shall be used after the concrete has reached sufficient strength to prevent undercutting of the coarse aggregate particles. After wet sandblasting, the surface of the concrete shall then be washed thoroughly to remove all loose materials.

3.1.2.4 Waste Disposal

The method used in disposing of waste water employed in cutting, washing, and rinsing of concrete surfaces shall be such that the waste water does not stain, discolor, or affect exposed surfaces of the structures, or damage the environment of the project area. The method of disposal shall be subject to approval.

3.1.2.5 Preparation of Previously Placed Concrete

Concrete surfaces to which other concrete is to be bonded shall be abraded in an approved manner that will expose sound aggregate uniformly without damaging the concrete. Laitance and loose particles shall be removed. Surfaces shall be thoroughly washed and shall be moist but without free water when concrete is placed.

3.1.3 Vapor Barrier

Vapor barrier shall be provided beneath the interior on-grade concrete floor slabs. The greatest widths and lengths practicable shall be used to eliminate joints wherever possible. Joints shall be lapped a minimum of 300 mm. (12 inches.) Torn, punctured, or damaged vapor barrier material shall be removed and new vapor barrier shall be provided prior to placing concrete. For minor repairs, patches may be made using laps of at least 300 mm. (12 inches.) Lapped joints shall be sealed and edges patched with pressure-sensitive adhesive or tape not less than 50 mm (2 inches) wide and compatible with the membrane. Vapor barrier shall be placed directly on underlying subgrade, base course, or capillary water barrier, unless it consists of crushed material or large granular material which could puncture the vapor barrier. In this case, the surface shall be choked with a light layer of sand, as approved, before placing the

vapor barrier. A 50 mm (2 inch) layer of compacted, clean concrete sand (fine aggregate) shall be placed on top of the vapor barrier before placing concrete. Concrete placement shall be controlled so as to prevent damage to the vapor barrier, or any covering sand.

3.1.4 Embedded Items

Before placement of concrete, care shall be taken to determine that all embedded items are firmly and securely fastened in place as indicated on the drawings, or required. Conduit and other embedded items shall be clean and free of oil and other foreign matter such as loose coatings or rust, paint, and scale. The embedding of wood in concrete will be permitted only when specifically authorized or directed. Voids in sleeves, inserts, and anchor slots shall be filled temporarily with readily removable materials to prevent the entry of concrete into voids. Welding shall not be performed on embedded metals within 600 mm (2 feet) of the surface of the concrete. Tack welding shall not be performed on or to embedded items.

3.2 CONCRETE PRODUCTION

3.2.1 Batching, Mixing, and Transporting Concrete

Concrete shall either be batched and mixed onsite or shall be furnished from a ready-mixed concrete plant. Ready-mixed concrete shall be batched, mixed, and transported in accordance with ASTM C 94, except as otherwise specified. Truck mixers, agitators, and nonagitating transporting units shall comply with NRMCA-01. Ready-mix plant equipment and facilities shall be certified in accordance with NRMCA QC 3. Approved batch tickets shall be furnished for each load of ready-mixed concrete. Site-mixed concrete shall conform to the following subparagraphs.

3.2.1.1 General

The batching plant shall be located off site close to the project. The batching plant shall conform to the requirements of NRMCA CPMB 100 and as specified; however, rating plates attached to batch plant equipment are not required.

3.2.1.2 Batching Equipment

The batching controls shall be semiautomatic or automatic, as defined in NRMCA CPMB 100. A semiautomatic batching system shall be provided with interlocks such that the discharge device cannot be actuated until the indicated material is within the applicable tolerance. The batching system shall be equipped with accurate recorder or recorders that meet the requirements of NRMCA CPMB 100. The weight of water and admixtures shall be recorded if batched by weight. Separate bins or compartments shall be provided for each size group of aggregate and type of cementitious material, to prevent intermingling at any time. Aggregates shall be weighed either in separate weigh batchers with individual scales or, provided the smallest size is batched first, cumulatively in one weigh batcher on one scale. Aggregate shall not be weighed in the same batcher with cementitious material. If both portland cement and other cementitious material are used, they may be batched cumulatively, provided that the portland cement is batched first, [except that silica fume shall always be batched separately]. Water may be measured by weight or volume. Water shall not be weighed or measured cumulatively with another ingredient. Filling and discharging valves for the water metering or batching system shall be so interlocked that the discharge valve cannot be opened before the filling valve is fully closed. Piping for water and for admixtures shall be free from leaks and shall be properly valved to prevent backflow or siphoning. Admixtures shall be furnished as a liquid of suitable concentration for easy control of dispensing. An adjustable, accurate, mechanical device for measuring and dispensing each admixture shall be provided. Each admixture dispenser shall be interlocked with the batching and discharging operation of the water so that each admixture is separately batched and individually discharged automatically in a manner to obtain uniform distribution throughout the water as it is added to the batch in the specified mixing period. When use of truck mixers makes this requirement impractical, the

admixture dispensers shall be interlocked with the sand batchers. Different admixtures shall not be combined prior to introduction in water and shall not be allowed to intermingle until in contact with the cement. Admixture dispensers shall have suitable devices to detect and indicate flow during dispensing or have a means for visual observation. The plant shall be arranged so as to facilitate the inspection of all operations at all times. Suitable facilities shall be provided for obtaining representative samples of aggregates from each bin or compartment, and for sampling and calibrating the dispensing of cementitious material, water, and admixtures. Filling ports for cementitious materials bins or silos shall be clearly marked with a permanent sign stating the contents.

3.2.1.3 Scales

The weighing equipment shall conform to the applicable requirements of CPMB Concrete Plant Standard, and of NIST HB 44, except that the accuracy shall be plus or minus 0.2 percent of scale capacity. The Contractor shall provide standard test weights and any other auxiliary equipment required for checking the operating performance of each scale or other measuring devices. The tests shall be made at the specified frequency in the presence of a Government inspector. The weighing equipment shall be arranged so that the plant operator can conveniently observe all dials or indicators.

3.2.1.4 Batching Tolerances

(A) Tolerances with Weighing Equipment

MATERIAL	PERCENT OF REQUIRED WEIGHT
Cementitious materials	0 to plus 2
Aggregate	plus or minus 2
Water	plus or minus 1
Chemical admixture	0 to plus 6

(B) Tolerances with Volumetric Equipment

For volumetric batching equipment used for water and admixtures, the following tolerances shall apply to the required volume of material being batched:

MATERIAL	PERCENT OF REQUIRED MATERIAL
Water:	plus or minus 1 percent
Chemical admixtures:	0 to plus 6 percent

3.2.1.5 Moisture Control

The plant shall be capable of ready adjustment to compensate for the varying moisture content of the aggregates and to change the weights of the materials being batched.

3.2.1.6 Concrete Mixers

Mixers shall be stationary mixers or truck mixers. Mixers shall be capable of combining the materials into a uniform mixture and of discharging this mixture without segregation. The mixers shall not be charged in excess of the capacity recommended by the manufacturer. The mixers shall be operated at the drum or mixing blade speed designated by the manufacturer. The mixers shall be maintained in satisfactory operating condition, and the mixer drums shall be kept free of hardened concrete. Should any mixer at any time produce unsatisfactory results, its use shall be promptly discontinued until it is repaired.

3.2.1.7 Stationary Mixers

Concrete plant mixers shall be drum-type mixers of tilting, nontilting, horizontal-shaft, or vertical-shaft type, or shall be pug mill type and shall be provided with an acceptable device to lock the discharge mechanism until the required mixing time has elapsed. The mixing time and uniformity shall conform to all the requirements in ASTM C 94 applicable to central-mixed concrete.

3.2.1.8 Truck Mixers

Truck mixers, the mixing of concrete therein, and concrete uniformity shall conform to the requirements of ASTM C 94. A truck mixer may be used either for complete mixing (transit-mixed) or to finish the partial mixing done in a stationary mixer (shrink-mixed). Each truck shall be equipped with two counters from which it is possible to determine the number of revolutions at mixing speed and the number of revolutions at agitating speed. Water shall not be added at the placing site unless specifically approved; and in no case shall it exceed the specified w/c. Any such water shall be injected at the base of the mixer, not at the discharge end.

3.3 TRANSPORTING CONCRETE TO PROJECT SITE

Concrete shall be transported to the placing site in [truck mixers,] [agitators,] [nonagitating transporting equipment conforming to NRMCA-01,] or by approved [pumping equipment] [conveyors]. Nonagitating equipment, other than pumps, shall not be used for transporting lightweight aggregate concrete.

3.4 CONVEYING CONCRETE ON SITE

Concrete shall be conveyed from mixer or transporting unit to forms as rapidly as possible and within the time interval specified by methods which will prevent segregation or loss of ingredients using following equipment. Conveying equipment shall be cleaned before each placement.

3.4.1 Buckets

The interior hopper slope shall be not less than 58 degrees from the horizontal, the minimum dimension of the clear gate opening shall be at least 5 times the nominal maximum-size aggregate, and the area of the gate opening shall not be less than 0.2 square meters. (2 square feet.) The maximum dimension of the gate opening shall not be greater than twice the minimum dimension. The bucket gates shall be essentially grout tight when closed and may be manually, pneumatically, or hydraulically operated except that buckets larger than 1.5 cubic meters (2 cubic yards) shall not be manually operated. The design of the bucket shall provide means for positive regulation of the amount and rate of deposit of concrete in each dumping position.

3.4.2 Transfer Hoppers

Concrete may be charged into nonagitating hoppers for transfer to other conveying devices. Transfer hoppers shall be capable of receiving concrete directly from delivery vehicles and shall have conical-shaped discharge features. The transfer hopper shall be equipped with a hydraulically operated gate and with a means of external vibration to effect complete discharge. Concrete shall not be held in nonagitating transfer hoppers more than 30 minutes.

3.4.3 Trucks

Truck mixers operating at agitating speed or truck agitators used for transporting plant-mixed concrete shall conform to the requirements of ASTM C 94. Nonagitating equipment shall be used only for transporting plant-mixed concrete over a smooth road and when the hauling time is less than 15

minutes. Bodies of nonagitating equipment shall be smooth, watertight, metal containers specifically designed to transport concrete, shaped with rounded corners to minimize segregation, and equipped with gates that will permit positive control of the discharge of the concrete.

3.4.4 Chutes

When concrete can be placed directly from a truck mixer, agitator, or nonagitating equipment, the chutes normally attached to this equipment by the manufacturer may be used. A discharge deflector shall be used when required by the Contracting Officer. Separate chutes and other similar equipment will not be permitted for conveying concrete.

3.4.5 Belt Conveyors

Belt conveyors shall be designed and operated to assure a uniform flow of concrete from mixer to final place of deposit without segregation of ingredients or loss of mortar and shall be provided with positive means, such as discharge baffle or hopper , for preventing segregation of the concrete at the transfer points and the point of placing. Belt conveyors shall be constructed such that the idler spacing shall not exceed 900 mm. (36 inches.) The belt speed shall be a minimum of 90 meters (300 feet) per minute and a maximum of 225 meters (750 feet) per minute. If concrete is to be placed through installed horizontal or sloping reinforcing bars, the conveyor shall discharge concrete into a pipe or elephant truck that is long enough to extend through the reinforcing bars.

3.4.6 Concrete Pumps

Concrete may be conveyed by positive displacement pump when approved. The pumping equipment shall be piston or squeeze pressure type; pneumatic placing equipment shall not be used. The pipeline shall be rigid steel pipe or heavy-duty flexible hose. The inside diameter of the pipe shall be at least 3 times the nominal maximum-size coarse aggregate in the concrete mixture to be pumped but not less than 100 mm. (4 inches.) Aluminum pipe shall not be used.

3.5 PLACING CONCRETE

Mixed concrete shall be discharged within 1-1/2 hours or before the mixer drum has revolved 300 revolutions, whichever comes first after the introduction of the mixing water to the cement and aggregates. When the concrete temperature exceeds 30 degrees C, (85 degrees F,) the time shall be reduced to 45 minutes. Concrete shall be placed within 15 minutes after it has been discharged from the transporting unit. Concrete shall be handled from mixer or transporting unit to forms in a continuous manner until the approved unit of operation is completed. Adequate scaffolding, ramps and walkways shall be provided so that personnel and equipment are not supported by in-place reinforcement. Placing will not be permitted when the sun, heat, wind, or limitations of facilities furnished by the Contractor prevent proper consolidation, finishing and curing. Sufficient placing capacity shall be provided so that concrete can be kept free of cold joints.

3.5.1 Depositing Concrete

Concrete shall be deposited as close as possible to its final position in the forms, and there shall be no vertical drop greater than 1.5 meters (5 feet) except where suitable equipment is provided to prevent segregation and where specifically authorized. Depositing of the concrete shall be so regulated that it will be effectively consolidated in horizontal layers not more than 300 mm (12 inches) thick, except that all slabs shall be placed in a single layer. Concrete to receive other construction shall be screeded to the proper level. Concrete shall be deposited continuously in one layer or in layers so that fresh concrete is deposited on in-place concrete that is still plastic. Fresh concrete shall not be deposited on concrete that has hardened sufficiently to cause formation of seams or planes of weakness within the section. Concrete that has surface dried, partially hardened, or contains foreign material shall not be used. When temporary

spreaders are used in the forms, the spreaders shall be removed as their service becomes unnecessary. Concrete shall not be placed in slabs over columns and walls until concrete in columns and walls has been in-place at least two hours or until the concrete begins to lose its plasticity. Concrete for beams, girders, brackets, column capitals, haunches, and drop panels shall be placed at the same time as concrete for adjoining slabs.

3.5.2 Consolidation

Immediately after placing, each layer of concrete shall be consolidated by internal vibrators, except for slabs 100 mm (4 inches) thick or less. The vibrators shall at all times be adequate in effectiveness and number to properly consolidate the concrete; a spare vibrator shall be kept at the jobsite during all concrete placing operations. The vibrators shall have a frequency of not less than 10,000 vibrations per minute, an amplitude of at least 0.6 mm, (0.025 inch,) and the head diameter shall be appropriate for the structural member and the concrete mixture being placed. Vibrators shall be inserted vertically at uniform spacing over the area of placement. The distance between insertions shall be approximately 1-1/2 times the radius of action of the vibrator so that the area being vibrated will overlap the adjacent just-vibrated area by a reasonable amount. The vibrator shall penetrate rapidly to the bottom of the layer and at least 150 mm (6 inches) into the preceding layer if there is such. Vibrator shall be held stationary until the concrete is consolidated and then vertically withdrawn slowly while operating. Form vibrators shall not be used unless specifically approved and unless forms are constructed to withstand their use. Vibrators shall not be used to move concrete within the forms. Slabs 100 mm (4 inches) and less in thickness shall be consolidated by properly designed vibrating screeds or other approved technique. Excessive vibration of lightweight concrete resulting in segration or flotation of coarse aggregate shall be prevented. Frequency and amplitude of vibrators shall be determined in accordance with COE CRD-C 521. Grate tampers ("jitterbugs") shall not be used.

3.5.3 Cold Weather Requirements

Special protection measures, approved by the Contracting Officer, shall be used if freezing temperatures are anticipated before the expiration of the specified curing period. The ambient temperature of the air where concrete is to be placed and the temperature of surfaces to receive concrete shall be not less than 5 degrees C. (40 degrees F.) The temperature of the concrete when placed shall be not less than 10 degrees C (50 degrees F) nor more than 25 degrees C. (75 degrees F.) Heating of the mixing water or aggregates will be required to regulate the concrete placing temperature. Materials entering the mixer shall be free from ice, snow, or frozen lumps. Salt, chemicals or other materials shall not be incorporated in the concrete to prevent freezing. Upon written approval, an accelerating admixture conforming to ASTM C 494, Type C or E may be used, provided it contains no calcium chloride. Calcium chloride shall not be used.

3.5.4 Hot Weather Requirements

When the ambient temperature during concrete placing is expected to exceed 30 degrees C, (85 degrees F,) the concrete shall be placed and finished with procedures previously submitted and as specified herein. The concrete temperature at time of delivery to the forms shall not exceed the temperature shown in the table below when measured in accordance with ASTM C 1064. Cooling of the mixing water or aggregates or placing concrete in the cooler part of the day may be required to obtain an adequate placing temperature. A retarder may be used, as approved, to facilitate placing and finishing. Steel forms and reinforcements shall be cooled as approved prior to concrete placement when steel temperatures are greater than 49 degrees C. (120 degrees F.) Conveying and placing equipment shall be cooled if necessary to maintain proper concrete-placing temperature.

Maximum Allowable Concrete Placing Tempurature	
Relative Humidity, Percent, During Time of Concrete Placement	Maximum Allowable Concrete Temperature, Degrees
Greater than 60	33 C (90 F)
40 - 60	30 C (85 F)
Less than 40	27 C (80 F)

3.5.5 Prevention of Plastic Shrinkage Cracking

During hot weather with low humidity, and particularly with appreciable wind, as well as interior placements when space heaters produce low humidity, the Contractor shall be alert to the tendency for plastic shrinkage cracks to develop and shall institute measures to prevent this. Particular care shall be taken if plastic shrinkage cracking is potentially imminent and especially if it has developed during a previous placement. Periods of high potential for plastic shrinkage cracking can be anticipated by use of Fig. 2.1.5 of ACI 305R. In addition the concrete placement shall be further protected by erecting shades and windbreaks and by applying fog sprays of water, sprinkling, ponding or wet covering. Plastic shrinkage cracks that occur shall be filled by injection of epoxy resin as directed, after the concrete hardens. Plastic shrinkage cracks shall never be troweled over or filled with slurry.

3.5.6 Placing Concrete Underwater

Concrete shall be deposited in water by a tremie or concrete pump. The methods and equipment used shall be subject to approval. Concrete buckets shall not be used for underwater placement of concrete except to deliver concrete to the tremie. The tremie shall be watertight and sufficiently large to permit a free flow of concrete. The concrete shall be deposited so that it enters the mass of the previously placed concrete from within, displacing water with a minimum disturbance to the surface of the concrete. The discharge end of the pump line or tremie shaft shall be kept continuously submerged in the concrete. The underwater seal at start of placing shall not produce undue turbulence in the water. The tremie shaft shall be kept full of concrete to a point well above the water surface. Placement shall proceed without interruption until the concrete has been brought to the required height. The tremie shall not be moved horizontally during a placing operation, and a sufficient number of tremies shall be provided so that the maximum horizontal flow of concrete will be limited to 5 m. (15 feet.) Concrete shall not be deposited in running water or in water with a temperature below 2 degrees C. (35 degrees F.)

3.5.7 Placing Concrete in Congested Areas

Special care shall be used to ensure complete filling of the forms, elimination of all voids, and complete consolidation of the concrete when placing concrete in areas congested with reinforcing bars, embedded items, waterstops and other tight spacing. An appropriate concrete mixture shall be used, and the nominal maximum size of aggregate (NMSA) shall meet the specified criteria when evaluated for the congested area. Vibrators with heads of a size appropriate for the clearances available shall be used, and the consolidation operation shall be closely supervised to ensure complete and thorough consolidation at all points. Where necessary, splices of reinforcing bars shall be alternated to reduce congestion. Where two mats of closely spaced reinforcing are required, the bars in each mat shall be placed in matching alignment to reduce congestion. Reinforcing bars may be temporarily crowded to one side during concrete placement provided they are returned to exact required location before concrete placement and consolidation are completed.

3.5.8 Placing Flowable Concrete

If a plasticizing admixture conforming to ASTM C 1017 is used or if a Type F or G high range water reducing admixture is permitted to increase the slump, the concrete shall meet all requirements of

paragraph GENERAL REQUIREMENTS in PART 1. Extreme care shall be used in conveying and placing the concrete to avoid segregation. Consolidation and finishing shall meet all requirements of paragraphs Placing Concrete, Finishing Formed Surfaces, and Finishing Unformed Surfaces. No relaxation of requirements to accommodate flowable concrete will be permitted.

3.6 JOINTS

Joints shall be located and constructed as indicated or approved. Joints not indicated on the drawings shall be located and constructed to minimize the impact on the strength of the structure. In general, such joints shall be located near the middle of the spans of supported slabs, beams, and girders unless a beam intersects a girder at this point, in which case the joint in the girder shall be offset a distance equal to twice the width of the beam. Joints in walls and columns shall be at the underside of floors, slabs, beams, or girders and at the tops of footings or floor slabs, unless otherwise approved. Joints shall be perpendicular to the main reinforcement. All reinforcement shall be continued across joints; except that reinforcement or other fixed metal items shall not be continuous through expansion joints, or through construction or contraction joints in slabs on grade. Reinforcement shall be 50 mm (2 inches) clear from each joint. Except where otherwise indicated, construction joints between interior slabs on grade and vertical surfaces shall consist of 1.5 kg per square meter (30 pound) asphalt-saturated felt, extending for the full depth of the slab. The perimeters of the slabs shall be free of fins, rough edges, spalling, or other unsightly appearance. Reservoir for sealant for construction and contraction joints in slabs shall be formed to the dimensions shown on the drawings by removing snap-out joint-forming inserts, by sawing sawable inserts, or by sawing to widen the top portion of sawed joints. Joints to be sealed shall be cleaned and sealed as indicated and in accordance with Section 07920 JOINT SEALING.

3.6.1 Construction Joints

For concrete other than slabs on grade, construction joints shall be located so that the unit of operation does not exceed 20 meters. (60 feet.) Concrete shall be placed continuously so that each unit is monolithic in construction. Fresh concrete shall not be placed against adjacent hardened concrete until it is at least 24 hours old. Construction joints shall be located as indicated or approved. Where concrete work is interrupted by weather, end of work shift or other similar type of delay, location and type of construction joint shall be subject to approval of the Contracting Officer. Unless otherwise indicated and except for slabs on grade, reinforcing steel shall extend through construction joints. Construction joints in slabs on grade shall be keyed or doweled as shown. Concrete columns, walls, or piers shall be in place at least 2 hours, or until the concrete begins to lose its plasticity, before placing concrete for beams, girders, or slabs thereon. In walls having door or window openings, lifts shall terminate at the top and bottom of the opening. Other lifts shall terminate at such levels as to conform to structural requirements or architectural details. Where horizontal construction joints in walls or columns are required, a strip of 25 mm (1 inch) square-edge lumber, bevelled and oiled to facilitate removal, shall be tacked to the inside of the forms at the construction joint. Concrete shall be placed to a point 25 mm (1 inch) above the underside of the strip. The strip shall be removed 1 hour after the concrete has been placed, and any irregularities in the joint line shall be leveled off with a wood float, and all laitance shall be removed. Prior to placing additional concrete, horizontal construction joints shall be prepared as specified in paragraph Previously Placed Concrete.

3.6.2 Contraction Joints in Slabs on Grade

Contraction joints shall be located and detailed as shown on the drawings. Contraction Joints shall be produced by forming a weakened plane in the concrete slab by use of snap-out plastic joint forming inserts or sawing a continuous slot with a concrete saw. Regardless of method used to produce the weakened plane, it shall be 1/4 the depth of the slab thickness and between 3 and 5 mm (1/8 and 3/16 inch) wide. For saw-cut joints, cutting shall be timed properly with the set of the concrete. Cutting shall be started as soon as the concrete has hardened sufficiently to prevent ravelling of the edges of the saw

cut. Cutting shall be completed before shrinkage stresses become sufficient to produce cracking. Reservoir for joint sealant shall be formed as previously specified.

3.6.3 Expansion Joints

Installation of expansion joints and sealing of these joints shall conform to the requirements of Section 03250 EXPANSION JOINTS, CONSTRUCTION JOINTS, AND WATERSTOPS and Section 07920 JOINT SEALING.

3.7 FINISHING FORMED SURFACES

Forms, form materials, and form construction are specified in Section 03100 STRUCTURAL CONCRETE FORMWORK. Finishing of formed surfaces shall be as specified herein. Unless another type of architectural or special finish is specified, surfaces shall be left with the texture imparted by the forms except that defective surfaces shall be repaired. Unless painting of surfaces is required, uniform color of the concrete shall be maintained by use of only one mixture without changes in materials or proportions for any structure or portion of structure that requires a Class A or B finish. Except for major defects, as defined hereinafter, surface defects shall be repaired as specified herein within 24 hours after forms are removed. Repairs of the so-called "plaster-type" will not be permitted in any location. Tolerances of formed surfaces shall conform to the requirements of ACI 117/A117R. These tolerances apply to the finished concrete surface, not to the forms themselves; forms shall be set true to line and grade. Form tie holes requiring repair and other defects whose depth is at least as great as their surface diameter shall be repaired as specified in paragraph Damp-Pack Mortar Repair. Defects whose surface diameter is greater than their depth shall be repaired as specified in paragraph Repair of Major Defects. Repairs shall be finished flush with adjacent surfaces and with the same surface texture. The cement used for all repairs shall be a blend of job cement with white cement proportioned so that the final color after curing and aging will be the same as the adjacent concrete. Concrete with excessive honeycomb, or other defects which affect the strength of the member, will be rejected. Repairs shall be demonstrated to be acceptable and free from cracks or loose or drummy areas at the completion of the contract and, for Class A and B Finishes, shall be inconspicuous. Repairs not meeting these requirements will be rejected and shall be replaced.

3.7.1 Class B Finish

Class B finish is required at all formed surfaces. Fins, ravelings, and loose material shall be removed, all surface defects over 12 mm (1/2 inch) in diameter or more than 12 mm (1/2 inch) deep, shall be repaired and, except as otherwise indicated or as specified in Section 03100 STRUCTURAL CONCRETE FORMWORK, holes left by removal of form ties shall be reamed and filled. Defects more than 12 mm (1/2 inch) in diameter shall be cut back to sound concrete, but in all cases at least 25 mm (1 inch) deep. The Contractor shall prepare a sample panel for approval (as specified in PART 1) before commencing repair, showing that the surface texture and color match will be attained. Metal tools shall not be used to finish repairs in Class A surfaces.

3.7.3 Architectural and Special Finishes

Architectural concrete finishes are specified in Section 03330 CAST-IN-PLACE ARCHITECTURAL CONCRETE.

3.8 REPAIRS

3.8.1 Damp-Pack Mortar Repair

Form tie holes requiring repair and other defects whose depth is at least as great as their surface diameter but not over 100 mm (4 inches) shall be repaired by the damp-pack mortar method. Form tie

holes shall be reamed and other similar defects shall be cut out to sound concrete. The void shall then be thoroughly cleaned, thoroughly wetted, brush-coated with a thin coat of neat cement grout and filled with mortar. Mortar shall be a stiff mix of 1 part portland cement to 2 parts fine aggregate passing the 1.18 mm (No. 16 mesh) sieve, and minimum amount of water. Only sufficient water shall be used to produce a mortar which, when used, will stick together on being molded into a ball by a slight pressure of the hands and will not exude water but will leave the hands damp. Mortar shall be mixed and allowed to stand for 30 to 45 minutes before use with remixing performed immediately prior to use. Mortar shall be thoroughly tamped in place in thin layers using a hammer and hardwood block. Holes passing entirely through walls shall be completely filled from the inside face by forcing mortar through to the outside face. All holes shall be packed full. Damp-pack repairs shall be moist cured for at least 48 hours.

3.8.2 Repair of Major Defects

Major defects will be considered to be those more than 12 mm (1/2 inch) deep or, for Class A and B finishes, more than 12 mm (1/2 inch) in diameter and, for Class C and D finishes, more than 50 mm (2 inches) in diameter. Also included are any defects of any kind whose depth is over 100 mm (4 inches) or whose surface diameter is greater than their depth. Major defects shall be repaired as specified below.

3.8.2.1 Surface Application of Mortar Repair

Defective concrete shall be removed, and removal shall extend into completely sound concrete. Approved equipment and procedures which will not cause cracking or microcracking of the sound concrete shall be used. If reinforcement is encountered, concrete shall be removed so as to expose the reinforcement for at least 50 mm (2 inches) on all sides. All such defective areas greater than 7800 square mm (12 square inches) shall be outlined by saw cuts at least 25 mm (1 inch) deep. Defective areas less than 7800 square mm (12 square inches) shall be outlined by a 25 mm (1 inch) deep cut with a core drill in lieu of sawing. All saw cuts shall be straight lines in a rectangular pattern in line with the formwork panels. After concrete removal, the surface shall be thoroughly cleaned by high pressure washing to remove all loose material. Surfaces shall be kept continually saturated for the first 12 of the 24 hours immediately before placing mortar and shall be damp but not wet at the time of commencing mortar placement. The Contractor, at his option, may use either hand-placed mortar or mortar placed with a mortar gun. If hand-placed mortar is used, the edges of the cut shall be perpendicular to the surface of the concrete. The prepared area shall be brush-coated with a thin coat of neat cement grout. The repair shall then be made using a stiff mortar, preshrunk by allowing the mixed mortar to stand for 30 to 45 minutes and then remixed, thoroughly tamped into place in thin layers. If hand-placed mortar is used, the Contractor shall test each repair area for drumminess by firm tapping with a hammer and shall inspect for cracks, both in the presence of the Contracting Officer's representative, immediately before completion of the contract, and shall replace any showing drumminess or cracking. If mortar placed with a mortar gun is used, the gun shall be a small compressed air-operated gun to which the mortar is slowly hand fed and which applies the mortar to the surface as a high-pressure stream, as approved. Repairs made using shotcrete equipment will not be accepted. The mortar used shall be the same mortar as specified for damp-pack mortar repair. If gun-placed mortar is used, the edges of the cut shall be beveled toward the center at a slope of 1:1. All surface applied mortar repairs shall be continuously moist cured for at least 7 days. Moist curing shall consist of several layers of saturated burlap applied to the surface immediately after placement is complete and covered with polyethylene sheeting, all held closely in place by a sheet of plywood or similar material rigidly braced against it. Burlap shall be kept continually wet.

3.8.2.2 Repair of Deep and Large Defects

Deep and large defects will be those that are more than 150 mm (6 inches) deep and also have an average diameter at the surface more than 450 mm (18 inches) or that are otherwise so identified by the Project Office. Such defects shall be repaired as specified herein or directed, except that defects which affect the strength of the structure shall not be repaired and that portion of the structure shall be completely removed and replaced. Deep and large defects shall be repaired by procedures approved in

advance including forming and placing special concrete using applied pressure during hardening. Preparation of the repair area shall be as specified for surface application of mortar. In addition, the top edge (surface) of the repair area shall be sloped at approximately 20 degrees from the horizontal, upward toward the side from which concrete will be placed. The special concrete shall be a concrete mixture with low water content and low slump, and shall be allowed to age 30 to 60 minutes before use. Concrete containing a specified expanding admixture may be used in lieu of the above mixture; the paste portion of such concrete mixture shall be designed to have an expansion between 2.0 and 4.0 percent when tested in accordance with ASTM C 940. A full width "chimney" shall be provided at the top of the form on the placing side to ensure filling to the top of the opening. A pressure cap shall be used on the concrete in the chimney with simultaneous tightening and revibrating the form during hardening to ensure a tight fit for the repair. The form shall be removed after 24 hours and immediately the chimney shall be carefully chipped away to avoid breaking concrete out of the repair; the surface of the repair concrete shall be dressed as required.

3.9 FINISHING UNFORMED SURFACES

The finish of all unformed surfaces shall meet the requirements of paragraph Tolerances in PART 1, when tested as specified herein.

3.9.1 General

The ambient temperature of spaces adjacent to unformed surfaces being finished and of the base on which concrete will be placed shall be not less than 10 degrees C. (50 degrees F.) In hot weather all requirements of paragraphs Hot Weather Requirements and Prevention of Plastic Shrinkage Cracking shall be met. Unformed surfaces that are not to be covered by additional concrete or backfill shall have a float finish, with additional finishing as specified below, and shall be true to the elevation shown on the drawings. Surfaces to receive additional concrete or backfill shall be brought to the elevation shown on the drawings, properly consolidated, and left true and regular. Unless otherwise shown on the drawings, exterior surfaces shall be sloped for drainage, as directed. Joints shall be carefully made with a jointing or edging tool. The finished surfaces shall be protected from stains or abrasions. Grate tampers or "jitterbugs" shall not be used for any surfaces. The dusting of surfaces with dry cement or other materials or the addition of any water during finishing shall not be permitted. If bleedwater is present prior to finishing, the excess water shall be carefully dragged off or removed by absorption with porous materials such as burlap. During finishing operations, extreme care shall be taken to prevent over finishing or working water into the surface; this can cause "crazing" (surface shrinkage cracks which appear after hardening) of the surface. Any slabs with surfaces which exhibit significant crazing shall be removed and replaced. During finishing operations, surfaces shall be checked with a 10 foot straightedge, applied in both directions at regular intervals while the concrete is still plastic, to detect high or low areas.

3.9.2 Rough Slab Finish

As a first finishing operation for unformed surfaces and as final finish for slabs to receive mortar setting beds, the surface shall receive a rough slab finish prepared as follows. The concrete shall be uniformly placed across the slab area, consolidated as previously specified, and then screeded with straightedge strikeoffs immediately after consolidation to bring the surface to the required finish level with no coarse aggregate visible. Side forms and screed rails shall be provided, rigidly supported, and set to exact line and grade. Allowable tolerances for finished surfaces apply only to the hardened concrete, not to forms or screed rails. Forms and screed rails shall be set true to line and grade. "Wet screeds" shall not be used.

3.9.3 Floated Finish

Slabs to receive more than a rough slab finish shall next be given a wood float finish. The screeding shall be followed immediately by darbying or bull floating before bleeding water is present, to bring the

surface to a true, even plane. Then, after the concrete has stiffened so that it will withstand a man's weight without imprint of more than 6 mm (1/4 inch) and the water sheen has disappeared, it shall be floated to a true and even plane free of ridges. Floating shall be performed by use of suitable hand floats or power driven equipment. Sufficient pressure shall be used on the floats to bring a film of moisture to the surface. Hand floats shall be made of wood, magnesium, or aluminum. Lightweight concrete or concrete that exhibits stickiness shall be floated with a magnesium float. Care shall be taken to prevent over-finishing or incorporating water into the surface.

3.9.4 Troweled Finish

All interior concrete slabs shall be given a trowel finish. After floating is complete and after the surface moisture has disappeared, unformed surfaces shall be steel-troweled to a smooth, even, dense finish, free from blemishes including trowel marks. In lieu of hand finishing, an approved power finishing machine may be used in accordance with the directions of the machine manufacturer. Additional trowelings shall be performed, either by hand or machine until the surface has been troweled 3 times, with waiting period between each. Care shall be taken to prevent blistering and if such occurs, troweling shall immediately be stopped and operations and surfaces corrected. A final hard steel troweling shall be done by hand, with the trowel tipped, and using hard pressure, when the surface is at a point that the trowel will produce a ringing sound. The finished surface shall be thoroughly consolidated and shall be essentially free of trowel marks and be uniform in texture and appearance. The concrete mixture used for troweled finished areas shall be adjusted, if necessary, in order to provide sufficient fines (cementitious material and fine sand) to finish properly.

3.9.5 Non-Slip Finish

Non-slip floors shall be constructed in accordance with the following subparagraphs.

3.9.5.1 Broomed

All esterior concrete slabs shall be given a broomed finish. After floating, the surface shall be lightly steel troweled, and then carefully scored by pulling a coarse fiber push-type broom across the surface. Brooming shall be transverse to traffic or at right angles to the slope of the slab. After the end of the curing period, the surface shall be vigorously broomed with a coarse fiber broom to remove all loose or semi-detached particles.

3.10 CURING AND PROTECTION

3.10.1 General

Concrete shall be cured by an approved method for a minimum of 7 days.

Immediately after placement, concrete shall be protected from premature drying, extremes in temperatures, rapid temperature change, mechanical injury and damage from rain and flowing water for the duration of the curing period. Air and forms in contact with concrete shall be maintained at a temperature above 10 degrees C (50 degrees F) for the first 3 days and at a temperature above 0 degrees C (32 degrees F) for the remainder of the specified curing period. Exhaust fumes from combustion heating units shall be vented to the outside of the enclosure, and heaters and ducts shall be placed and directed so as not to cause areas of overheating and drying of concrete surfaces or to create fire hazards. Materials and equipment needed for adequate curing and protection shall be available and at the site prior to placing concrete. No fire or excessive heat, including welding, shall be permitted near or in direct contact with the concrete at any time. Except as otherwise permitted by paragraph Membrane Forming Curing Compounds, moist curing shall be provided for any areas to receive floor hardener, any paint or other applied coating, or to which other concrete is to be bonded. Concrete containing silica fume shall be

initially cured by fog misting during finishing, followed immediately by continuous moist curing. Except for plastic coated burlap, impervious sheeting alone shall not be used for curing.

3.10.2 Moist Curing

Concrete to be moist-cured shall be maintained continuously wet for the entire curing period, commencing immediately after finishing. If water or curing materials used stain or discolor concrete surfaces which are to be permanently exposed, the concrete surfaces shall be cleaned as approved. When wooden forms are left in place during curing, they shall be kept wet at all times. If steel forms are used in hot weather, nonsupporting vertical forms shall be broken loose from the concrete soon after the concrete hardens and curing water continually applied in this void. If the forms are removed before the end of the curing period, curing shall be carried out as on unformed surfaces, using suitable materials. Surfaces shall be cured by ponding, by continuous sprinkling, by continuously saturated burlap or cotton mats, or by continuously saturated plastic coated burlap. Burlap and mats shall be clean and free from any contamination and shall be completely saturated before being placed on the concrete. The Contractor shall have an approved work system to ensure that moist curing is continuous 24 hours per day.

3.10.3 Membrane Forming Curing Compounds

Membrane forming curing compounds shall be used only on surfaces in the following areas, [_____]. Concrete in the following areas [may be cured with a pigmented curing compound in lieu of moist curing.] [may be cured with a nonpigmented curing compound containing a fugitive dye in lieu of moist curing.] Membrane curing shall not be used on surfaces that are to receive any subsequent treatment depending on adhesion or bonding to the concrete, including surfaces to which a smooth finish is to be applied or other concrete to be bonded. However, a styrene acrylate or chlorinated rubber compound meeting ASTM C 309, Class B requirements, may be used for surfaces which are to be painted or are to receive bituminous roofing or waterproofing, or floors that are to receive adhesive applications of resilient flooring. The curing compound selected shall be compatible with any subsequent paint, roofing, waterproofing or flooring specified. Membrane curing compound shall not be used on surfaces that are maintained at curing temperatures with free steam. Curing compound shall be applied to formed surfaces immediately after the forms are removed and prior to any patching or other surface treatment except the cleaning of loose sand, mortar, and debris from the surface. All surfaces shall be thoroughly moistened with water. Curing compound shall be applied to slab surfaces as soon as the bleeding water has disappeared, with the tops of joints being temporarily sealed to prevent entry of the compound and to prevent moisture loss during the curing period. The curing compound shall be applied in a two-coat continuous operation by approved motorized power-spraying equipment operating at a minimum pressure of 500 kPa, (75 psi,) at a uniform coverage of not more than 10 cubic meters per L (400 square feet per gallon) for each coat, and the second coat shall be applied perpendicular to the first coat. Concrete surfaces which have been subjected to rainfall within 3 hours after curing compound has been applied shall be resprayed by the method and at the coverage specified. Surfaces on which clear compound is used shall be shaded from direct rays of the sun for the first 3 days. Surfaces coated with curing compound shall be kept free of foot and vehicular traffic, and from other sources of abrasion and contamination during the curing period.

3.10.4 Cold Weather Curing and Protection

When the daily ambient low temperature is less than 0 degrees C (32 degrees F) the temperature of the concrete shall be maintained above 5 degrees C (40 degrees F) for the first seven days after placing. During the period of protection removal, the air temperature adjacent to the concrete surfaces shall be controlled so that concrete near the surface will not be subjected to a temperature differential of more than 13 degrees C (25 degrees F) as determined by suitable temperature measuring devices furnished by the Government, as required, and installed adjacent to the concrete surface and 50 mm (2 inches) inside the surface of the concrete. The installation of the thermometers shall be made by the Contractor as directed.

3.11 SETTING BASE PLATES AND BEARING PLATES

After being properly positioned, column base plates, bearing plates for beams and similar structural members, and machinery and equipment base plates shall be set to the proper line and elevation with nonshrink grout. The thickness of the mortar or grout shall be approximately 1/24 the width of the plate, but not less than 20 mm. (3/4 inch.) Concrete and metal surfaces in contact with grout shall be clean and free of oil and grease, and concrete surfaces in contact with grout shall be damp and free of laitance when grout is placed.

3.11.1 Nonshrink Grout

Nonshrink grout shall be a ready-mixed material requiring only the addition of water. Water content shall be the minimum that will provide a flowable mixture and completely fill the space to be grouted without segregation, bleeding, or reduction of strength.

3.11.1.1 Mixing and Placing of Nonshrink Grout

Mixing and placing shall be in conformance with the material manufacturer's instructions and as specified therein. Ingredients shall be thoroughly dry-mixed before adding water. After adding water, the batch shall be mixed for 3 minutes. Batches shall be of size to allow continuous placement of freshly mixed grout. Grout not used within 30 minutes after mixing shall be discarded. The space between the top of the concrete or machinery-bearing surface and the plate shall be filled solid with the grout. Forms shall be of wood or other equally suitable material for completely retaining the grout on all sides and on top and shall be removed after the grout has set. The placed grout shall be carefully worked by rodding or other means to eliminate voids; however, overworking and breakdown of the initial set shall be avoided. Grout shall not be retempered or subjected to vibration from any source. Where clearances are unusually small, placement shall be under pressure with a grout pump. Temperature of the grout, and of surfaces receiving the grout, shall be maintained at 18 to 30 degrees C (65 to 85 degrees F) until after setting.

3.12 TESTING AND INSPECTION FOR CONTRACTOR QUALITY CONTROL

The Contractor shall perform the inspection and tests described below and, based upon the results of these inspections and tests, shall take the action required and shall submit specified reports. When, in the opinion of the Contracting Officer, the concreting operation is out of control, concrete placement shall cease and the operation shall be corrected. The laboratory performing the tests shall be onsite and shall conform with ASTM C 1077. Materials may be subjected to check testing by the Government from samples obtained at the manufacturer, at transfer points, or at the project site. The Government will inspect the laboratory, equipment, and test procedures prior to start of concreting operations and at least once per 30 days thereafter for conformance with ASTM C 1077.

3.12.1 Grading and Corrective Action

3.12.1.1 Fine Aggregate

At least once during each shift when the concrete plant is operating, there shall be one sieve analysis and fineness modulus determination in accordance with ASTM C 136 and COE CRD-C 104 for the fine aggregate or for each fine aggregate if it is batched in more than one size or classification. The location at which samples are taken may be selected by the Contractor as the most advantageous for control. However, the Contractor is responsible for delivering fine aggregate to the mixer within specification limits. When the amount passing on any sieve is outside the specification limits, the fine aggregate shall be immediately resampled and retested. If there is another failure on any sieve, the fact shall immediately reported to the Contracting Officer, concreting shall be stopped, and immediate steps taken to correct the grading.

3.12.1.2 Coarse Aggregate

At least once during each shift in which the concrete plant is operating, there shall be a sieve analysis in accordance with ASTM C 136 for each size of coarse aggregate. The location at which samples are taken may be selected by the Contractor as the most advantageous for production control. However, the Contractor shall be responsible for delivering the aggregate to the mixer within specification limits. A test record of samples of aggregate taken at the same locations shall show the results of the current test as well as the average results of the five most recent tests including the current test. The Contractor may adopt limits for control coarser than the specification limits for samples taken other than as delivered to the mixer to allow for degradation during handling. When the amount passing any sieve is outside the specification limits, the coarse aggregate shall be immediately resampled and retested. If the second sample fails on any sieve, that fact shall be reported to the Contracting Officer. Where two consecutive averages of 5 tests are outside specification limits, the operation shall be considered out of control and shall be reported to the Contracting Officer. Concreting shall be stopped and immediate steps shall be taken to correct the grading.

3.12.2 Quality of Aggregates

Thirty days prior to the start of concrete placement, the Contractor shall perform all tests for aggregate quality required by ASTM C 33. In addition, after the start of concrete placement, the Contractor shall perform tests for aggregate quality at least every three months, and when the source of aggregate or aggregate quality changes. Samples tested after the start of concrete placement shall be taken immediately prior to entering the concrete mixer.

3.12.3 Scales, Batching and Recording

The accuracy of the scales shall be checked by test weights prior to start of concrete operations and at least once every three months. Such tests shall also be made as directed whenever there are variations in properties of the fresh concrete that could result from batching errors. Once a week the accuracy of each batching and recording device shall be checked during a weighing operation by noting and recording the required weight, recorded weight, and the actual weight batched. At the same time, the Contractor shall test and ensure that the devices for dispensing admixtures are operating properly and accurately. When either the weighing accuracy or batching accuracy does not comply with specification requirements, the plant shall not be operated until necessary adjustments or repairs have been made. Discrepancies in recording accuracies shall be corrected immediately.

3.12.4 Batch-Plant Control

The measurement of concrete materials including cementitious materials, each size of aggregate, water, and admixtures shall be continuously controlled. The aggregate weights and amount of added water shall be adjusted as necessary to compensate for free moisture in the aggregates. The amount of air-entraining agent shall be adjusted to control air content within specified limits. A report shall be prepared indicating type and source of cement used, type and source of pozzolan or slag used, amount and source of admixtures used, aggregate source, the required aggregate and water weights per cubic meter, (cubic yard,) amount of water as free moisture in each size of aggregate, and the batch aggregate and water weights per cubic meter (cubic yard) for each class of concrete batched during each day's plant operation.

3.12.5 Concrete Mixture

a. Air Content Testing. Air content tests shall be made when test specimens are fabricated. In addition, at least two tests for air content shall be made on randomly selected batches of each separate concrete mixture produced during each 8-hour period of concrete production. Additional tests shall be made when excessive variation in workability is reported by the placing foreman or Government

inspector. Tests shall be made in accordance with ASTM C 231 for normal weight concrete and ASTM C 173 for lightweight concrete. Test results shall be plotted on control charts which shall at all times be readily available to the Government and shall be submitted weekly. Copies of the current control charts shall be kept in the field by testing crews and results plotted as tests are made. When a single test result reaches either the upper or lower action limit, a second test shall immediately be made. The results of the two tests shall be averaged and this average used as the air content of the batch to plot on both the air content and the control chart for range, and for determining need for any remedial action. The result of each test, or average as noted in the previous sentence, shall be plotted on a separate control chart for each mixture on which an "average line" is set at the midpoint of the specified air content range from paragraph Air Entrainment. An upper warning limit and a lower warning limit line shall be set 1.0 percentage point above and below the average line, respectively. An upper action limit and a lower action limit line shall be set 1.5 percentage points above and below the average line, respectively. The range between each two consecutive tests shall be plotted on a secondary control chart for range where an upper warning limit is set at 2.0 percentage points and an upper action limit is set at 3.0 percentage points. Samples for air content may be taken at the mixer, however, the Contractor is responsible for delivering the concrete to the placement site at the stipulated air content. If the Contractor's materials or transportation methods cause air content loss between the mixer and the placement, correlation samples shall be taken at the placement site as required by the Contracting Officer, and the air content at the mixer controlled as directed.

b. Air Content Corrective Action. Whenever points on the control chart for percent air reach either warning limit, an adjustment shall immediately be made in the amount of air-entraining admixture batched. As soon as practical after each adjustment, another test shall be made to verify the result of the adjustment. Whenever a point on the secondary control chart for range reaches the warning limit, the admixture dispenser shall be recalibrated to ensure that it is operating accurately and with good reproducibility. Whenever a point on either control chart reaches an action limit line, the air content shall be considered out of control and the concreting operation shall immediately be halted until the air content is under control. Additional air content tests shall be made when concreting is restarted.

c. Slump Testing. In addition to slump tests which shall be made when test specimens are fabricated, at least four slump tests shall be made on randomly selected batches in accordance with ASTM C 143 for each separate concrete mixture produced during each 8-hour or less period of concrete production each day. Also, additional tests shall be made when excessive variation in workability is reported by the placing foreman or Government inspector. Test results shall be plotted on control charts which shall at all times be readily available to the Government and shall be submitted weekly. Copies of the current control charts shall be kept in the field by testing crews and results plotted as tests are made. When a single slump test reaches or goes beyond either the upper or lower action limit, a second test shall immediately be made. The results of the two tests shall be averaged and this average used as the slump of the batch to plot on both the control charts for slump and the chart for range, and for determining need for any remedial action. Limits shall be set on separate control charts for slump for each type of mixture. The upper warning limit shall be set at 12.5 mm (1/2 inch) below the maximum allowable slump specified in paragraph Slump in PART 1 for each type of concrete and an upper action limit line and lower action limit line shall be set at the maximum and minimum allowable slumps, respectively, as specified in the same paragraph. The range between each consecutive slump test for each type of mixture shall be plotted on a single control chart for range on which an upper action limit is set at 50 mm. (2 inches.) Samples for slump shall be taken at the mixer. However, the Contractor is responsible for delivering the concrete to the placement site at the stipulated slump. If the Contractor's materials or transportation methods cause slump loss between the mixer and the placement, correlation samples shall be taken at the placement site as required by the Contracting Officer, and the slump at the mixer controlled as directed.

d. Slump Corrective Action. Whenever points on the control charts for slump reach the upper warning limit, an adjustment shall immediately be made in the batch weights of water and fine aggregate. The adjustments are to be made so that the total water content does not exceed that amount allowed by the maximum w/c ratio specified, based on aggregates which are in a saturated surface dry condition. When a

single slump reaches the upper or lower action limit, no further concrete shall be delivered to the placing site until proper adjustments have been made. Immediately after each adjustment, another test shall be made to verify the correctness of the adjustment. Whenever two consecutive individual slump tests, made during a period when there was no adjustment of batch weights, produce a point on the control chart for range at or above the upper action limit, the concreting operation shall immediately be halted, and the Contractor shall take appropriate steps to bring the slump under control. Additional slump tests shall be made as directed.

e. Temperature. The temperature of the concrete shall be measured when compressive strength specimens are fabricated. Measurement shall be in accordance with ASTM C 1064. The temperature shall be reported along with the compressive strength data.

f. Strength Specimens. At least one set of test specimens shall be made, for compressive or flexural strength as appropriate, on each different concrete mixture placed during the day for each 380 cubic meters (500 cubic yards) or portion thereof of that concrete mixture placed each day. Additional sets of test specimens shall be made, as directed by the Contracting Officer, when the mixture proportions are changed or when low strengths have been detected. A truly random (not haphazard) sampling plan shall be developed by the Contractor and approved by the Contracting Officer prior to the start of construction. The plan shall assure that sampling is done in a completely random and unbiased manner. A set of test specimens for concrete with a 28-day specified strength per paragraph Strength Requirements in PART 1 shall consist of four specimens, two to be tested at 7 days and two at 28 days. [A set of test specimens for concrete with a 90-day strength per the same paragraph shall consist of six specimens, two tested at 7 days, two at 28 days, and two at 90 days.] Test specimens shall be molded and cured in accordance with ASTM C 31 and tested in accordance with ASTM C 39 for test cylinders and ASTM C 78 for test beams. Results of all strength tests shall be reported immediately to the Contracting Officer. Quality control charts shall be kept for individual strength "tests", ("test" as defined in parargraph Strength Requirements in PART 1) moving average of last 3 "tests" for strength, and moving average for range for the last 3 "tests" for each mixture. The charts shall be similar to those found in ACI 214.3R.

3.12.6 Inspection Before Placing

Foundations, construction joints, forms, and embedded items shall be inspected by the Contractor in sufficient time prior to each concrete placement in order to certify to the Contracting Officer that they are ready to receive concrete. The results of each inspection shall be reported in writing.

3.12.7 Placing

The placing foreman shall supervise placing operations, shall determine that the correct quality of concrete or grout is placed in each location as specified and as directed by the Contracting Officer, and shall be responsible for measuring and recording concrete temperatures and ambient temperature hourly during placing operations, weather conditions, time of placement, volume placed, and method of placement. The placing foreman shall not permit batching and placing to begin until it has been verified that an adequate number of vibrators in working order and with competent operators are available. Placing shall not be continued if any pile of concrete is inadequately consolidated. If any batch of concrete fails to meet the temperature requirements, immediate steps shall be taken to improve temperature controls.

3.12.8 Vibrators

The frequency and amplitude of each vibrator shall be determined in accordance with COE CRD-C 521 prior to initial use and at least once a month when concrete is being placed. Additional tests shall be made as directed when a vibrator does not appear to be adequately consolidating the concrete. The frequency shall be determined while the vibrator is operating in concrete with the tachometer being held against the upper end of the vibrator head while almost submerged and just before the vibrator is

withdrawn from the concrete. The amplitude shall be determined with the head vibrating in air. Two measurements shall be taken, one near the tip and another near the upper end of the vibrator head, and these results averaged. The make, model, type, and size of the vibrator and frequency and amplitude results shall be reported in writing. Any vibrator not meeting the requirements of paragraph Consolidation, shall be immediately removed from service and repaired or replaced.

3.12.9 Curing Inspection

a. Moist Curing Inspections. At least once each shift, and not less than twice per day on both work and non-work days, an inspection shall be made of all areas subject to moist curing. The surface moisture condition shall be noted and recorded.

b. Moist Curing Corrective Action. When a daily inspection report lists an area of inadequate curing, immediate corrective action shall be taken, and the required curing period for those areas shall be extended by 1 day.

c. Membrane Curing Inspection. No curing compound shall be applied until the Contractor has verified that the compound is properly mixed and ready for spraying. At the end of each operation, the Contractor shall estimate the quantity of compound used by measurement of the container and the area of concrete surface covered, shall compute the rate of coverage in square meters per Liter, (square feet per gallon,) and shall note whether or not coverage is uniform.

d. Membrane Curing Corrective Action. When the coverage rate of the curing compound is less than that specified or when the coverage is not uniform, the entire surface shall be sprayed again.

e. Sheet Curing Inspection. At least once each shift and once per day on non-work days, an inspection shall be made of all areas being cured using impervious sheets. The condition of the covering and the tightness of the laps and tapes shall be noted and recorded.

f. Sheet Curing Corrective Action. When a daily inspection report lists any tears, holes, or laps or joints that are not completely closed, the tears and holes shall promptly be repaired or the sheets replaced, the joints closed, and the required curing period for those areas shall be extended by 1 day.

3.12.10 Cold-Weather Protection

At least once each shift and once per day on non-work days, an inspection shall be made of all areas subject to cold-weather protection. Any deficiencies shall be noted, corrected, and reported.

3.12.11 Mixer Uniformity

a. Stationary Mixers. Prior to the start of concrete placing and once every 6 months when concrete is being placed, or once for every 60,000 cubic meters (75,000 cubic yards) of concrete placed, whichever results in the shortest time interval, uniformity of concrete mixing shall be determined in accordance with ASTM C 94.

b. Truck Mixers. Prior to the start of concrete placing and at least once every 6 months when concrete is being placed, uniformity of concrete mixing shall be determined in accordance with ASTM C 94. The truck mixers shall be selected randomly for testing. When satisfactory performance is found in one truck mixer, the performance of mixers of substantially the same design and condition of the blades may be regarded as satisfactory.

c. Mixer Uniformity Corrective Action. When a mixer fails to meet mixer uniformity requirements, either the mixing time shall be increased, batching sequence changed, batch size reduced, or adjustments shall be made to the mixer until compliance is achieved.

3.12.12 Reports

All results of tests or inspections conducted shall be reported informally as they are completed and in writing daily. A weekly report shall be prepared for the updating of control charts covering the entire period from the start of the construction season through the current week. During periods of cold-weather protection, reports of pertinent temperatures shall be made daily. These requirements do not relieve the Contractor of the obligation to report certain failures immediately as required in preceding paragraphs. Such reports of failures and the action taken shall be confirmed in writing in the routine reports. The Contracting Officer has the right to examine all contractor quality control records.

-- End of Section --

INDEX

SECTION 04200

MASONRY

Paragraph		Page
1.1	REFERENCES	04200 - 1
1.2	SUBMITTALS	04200 - 2
1.3	SAMPLE MASONRY PANELS	04200 - 3
1.4	DELIVERY, HANDLING, AND STORAGE	04200 - 4
1.5	SPECIAL INSPECTION	04200 - 4
2.1	GENERAL REQUIREMENTS	04200 - 5
2.2	CONCRETE BRICK	04200 - 5
2.3	CONCRETE MASONRY UNITS	04200 - 5
2.4	MORTAR	04200 - 6
2.5	GROUT	04200 - 7
2.6	ANCHORS, TIES, AND BAR POSITIONERS	04200 - 7
2.7	REINFORCING STEEL BARS AND RODS	04200 - 7
2.8	CONTROL JOINT KEYS	04200 - 7
2.9	EXPANSION JOINT MATERIALS	04200 - 7
2.10	FLASHING	04200 - 8
3.1	ENVIRONMENTAL REQUIREMENTS	04200 - 8
3.2	LAYING MASONRY UNITS	04200 - 9
3.3	MORTAR	04200 - 12
3.4	REINFORCING STEEL	04200 - 12
3.5	PLACING GROUT	04200 - 12
3.6	BOND BEAMS	04200 - 15
3.7	CONTROL JOINTS	04200 - 15
3.8	LINTELS	04200 - 15
3.9	POINTING AND CLEANING	04200 - 15
3.10	BEARING PLATES	04200 - 16
3.11	PROTECTION	04200 - 16
3.12	TEST REPORTS	04200 - 16

SECTION 04200
MASONRY

PART 1 GENERAL

1.1 REFERENCES

The publications listed below form a part of this specification to the extent referenced. The publications are referred to in the text by basic designation only.

AMERICAN CONCRETE INSTITUTE (ACI)

ACI SP-66 (1988) ACI Detailing Manual

AMERICAN SOCIETY FOR TESTING AND MATERIALS (ASTM)

ASTM A 82 (1990a) Steel Wire, Plain, for Concrete Reinforcement

ASTM A 153 (1982; R 1987) Zinc Coating (Hot-Dip) on Iron and Steel Hardware

ASTM A 615 (1993) Deformed and Plain Billet-Steel Bars for Concrete Reinforcement

ASTM C 55 (1993a) Concrete Building Brick

ASTM C 67 (1993a) Sampling and Testing Brick and Structural Clay Tile

ASTM C 90 (1993) Loadbearing Concrete Masonry Units

ASTM C 126 (1991) Ceramic Glazed Structural Clay Facing Tile, Facing Brick, and Solid Masonry Units

ASTM C 140 (1991) Sampling and Testing Concrete Masonry Units

ASTM C 270 (1992a) Mortar for Unit Masonry

ASTM C 476 (1991) Grout for Masonry

ASTM C 494 (1992) Chemical Admixtures for Concrete

ASTM C 652 (1993) Hollow Brick (Hollow Masonry Units Made From Clay or Shale)

ASTM C 780 (1991) Preconstruction and Construction Evaluation of Mortars for Plain and Reinforced Unit Masonry

ASTM C 1019 (1989a; R 1993) Sampling and Testing Grout

ASTM C 1072 (1993) Measurement of Masonry Flexural Bond Strength

ASTM D 2000 (1990) Rubber Products in Automotive Applications

ASTM D 2240 (1991) Rubber Property - Durometer Hardness

ASTM D 2287 (1992) Nonrigid Vinyl Chloride Polymer and Copolymer Molding and Extrusion Compounds

ASTM E 119 (1988) Fire Tests of Building Construction and Materials

ASTM E 447 (1992b) Compressive Strength of Masonry Prisms

1.2 SUBMITTALS

Government approval is required for submittals with a "GA" designation; submittals having an "FIO" designation are for information only. The following shall be submitted in accordance with SECTION 01300 SUBMITTAL PROCEDURES:

SD-01 Data

Clay or Shale Brick; GA. Concrete Brick; GA. Prefaced Concrete Masonry Units; GA. Insulation; GA. Ceramic Glazed Structural Clay Facing Units; GA.

Manufacturer's descriptive data.

SD-04 Drawings

Masonry Work; GA.

Drawings showing the location and layout of concrete masonry units. Drawings including plans, elevations, and details of wall reinforcement; details of reinforcing bars at corners and wall intersections; offsets; tops, bottoms, and ends of walls; control and expansion joints; and wall openings. Bar splice locations shall be shown. Bent bars shall be identified on a bending diagram and shall be referenced and located on the drawings. Wall dimensions, bar clearances, and wall openings greater than one masonry unit in area shall be shown. No approval will be given to the shop drawings until the Contractor certifies that all openings, including those for mechanical and electrical service, are shown. The minimum scale for wall elevations shall be 1 to 50. (1/4 inch per foot.) Reinforcement bending details shall conform to the requirements of ACI SP-66.

SD-09 Reports

Efflorescence Test; GA. Field Testing of Mortar; GA. Field Testing of Grout; GA. Prism tests; GA. Masonry Cement; GA. Fire-rated CMU; GA.

Test reports from an approved independent laboratory. Test reports on a previously tested material shall be certified as the same as that proposed for use in this project.

Special Inspection; GA.

Copies of masonry inspector reports.

SD-13 Certificates

Clay or Shale Brick; FI0. Concrete Brick; FIO. Concrete Masonry Units (CMU); FIO. Prefaced Concrete Masonry Units; FIO. Control Joint Keys; FIO. Anchors, Ties, and Bar Positioners; FIO. Expansion-Joint Materials; FIO. Joint Reinforcement; FIO. Reinforcing Steel Bars and Rods; FIO. Masonry Cement; FIO. Mortar Coloring; FIO. Insulation; FIO. Precast Concrete Items; FIO. Mortar Admixtures; FIO. Grout Admixtures; FIO. Glass Block Units and Accessories; FIO. Ceramic Glazed Structural Clay Facing Units; FIO.

Certificates of compliance stating that the materials meet the specified requirements.

SD-14 Samples

Concrete Masonry Units (CMU); GA. Prefaced Concrete Masonry Units; GA. Concrete Brick; GA. Clay or Shale Brick; GA. Ceramic Glazed Structural Clay Facing Units; GA.

Color samples of three stretcher units and one unit for each type of special shape. Units shall show the full range of color and texture.

Anchors, Ties, and Bar Positioners; GA.

Two of each type used.

Expansion-Joint Material; GA.

One piece of each type used.

Joint Reinforcement; GA.

One piece of each type used, including corner and wall intersection pieces, showing at least two cross wires.

1.3 SAMPLE MASONRY PANELS

After material samples are approved and prior to starting masonry work, sample masonry panels shall be constructed for each type and color of masonry required. At least 48 hours prior to constructing the sample panel or panels, the Contractor shall submit written notification to the Contracting Officer's Representative. Sample panels shall not be built in, or as part of the structure, but shall be located where directed.

1.3.1 Configuration

Panels shall be L-shaped or otherwise configured to represent all of the wall elements. Panels shall be of the size necessary to demonstrate the acceptable level of workmanship for each type of masonry represented on the project. The minimum size of a straight panel or a leg of an L-shaped panel shall be 2.5 m (8 feet long) by 1.8m. (6 feet high.)

1.3.2 Composition

Panels shall show full color range, texture, and bond pattern of the masonry work. The Contractor's method for mortar joint tooling; grouting of reinforced vertical cores, collar joints, bond beams, and lintels; positioning, securing, and lapping of reinforcing steel; positioning and lapping of joint reinforcement (including prefabricated corners); and cleaning of masonry work shall be demonstrated during the construction of the panels. Installation or application procedures for anchors, wall ties, glass block units, CMU control joints, brick expansion joints, insulation, flashing, brick soldier, row lock courses and weepholes shall be shown in the sample panels. The panels shall contain a masonry bonded corner that includes a bond beam corner. Panels that represent reinforced masonry shall contain a 600 mm by 600 mm (2 foot by 2 foot) opening placed at least 600 mm (2 feet) above the panel base and 600 mm (2 feet) away from all free edges, corners, and control joints. Required reinforcing shall be provided around this opening as well as at wall corners and control joints.

1.3.3 Construction Method

Where anchored veneer walls are required, the Contractor shall demonstrate and receive approval for the method of construction. Where masonry is to be grouted, the Contractor shall demonstrate and receive approval on the method that will be used to bring up the masonry wythes; support the reinforcing bars; and grout cells, bond beams, lintels, and collar joints using the requirements specified herein. If sealer is specified to be applied to the masonry units, sealer shall be applied to the sample panels. Panels shall be built on a properly designed concrete foundation.

1.3.4 Usage

The completed panels shall be used as the standard of workmanship for the type of masonry represented. Masonry work shall not commence until the sample panel for that type of masonry construction has been completed and approved. Panels shall be protected from the weather and construction operations until the masonry work has been completed and approved. After completion of the work, the sample panels, including all foundation concrete, shall become the property of the Contractor and shall be removed from the construction site.

1.4 DELIVERY, HANDLING, AND STORAGE

Materials shall be delivered, handled, stored, and protected to avoid chipping, breakage, and contact with soil or contaminating material.

1.4.1 Masonry Units

Concrete masonry units shall be covered or protected from inclement weather and shall conform to the moisture content as specified in ASTM C 90 when delivered to the jobsite. In addition, glass block units and prefaced concrete units shall be stored with their finish surfaces covered. Prefabricated lintels shall be marked on top sides to show either the lintel schedule number or the number and size of top and bottom bars.

1.4.2 Reinforcement, Anchors, and Ties

Steel reinforcing bars, coated anchors, ties, and joint reinforcement shall be stored above the ground. Steel reinforcing bars and uncoated ties shall be free of loose mill scale and rust.

1.4.3 Cementitious Materials, Sand and Aggregates

Cementitious and other packaged materials shall be delivered in unopened containers, plainly marked and labeled with manufacturers' names and brands. Cementitious material shall be stored in dry, weathertight enclosures or be completely covered. Cement shall be handled in a manner that will prevent the inclusion of foreign materials and damage by water or dampness. Sand and aggregates shall be stored in a manner to prevent contamination or segregation.

1.5 SPECIAL INSPECTION

A qualified masonry inspector approved by the Contracting Officer shall perform inspection of the masonry work. Minimum qualifications for the masonry inspector shall be 5 years of reinforced masonry inspection experience or acceptance by a State, municipality, or other governmental body having a program of examining and certifying inspectors for reinforced masonry construction. The masonry inspector shall be present during preparation of masonry prisms, sampling and placing of masonry units,placement of reinforcement (including placement of dowels in footings and foundation walls), inspection of grout space, immediately prior to closing of cleanouts, and during grouting operations. The masonry inspector shall assure Contractor compliance with the drawings and specifications. The masonry

inspector shall keep a complete record of all inspections and shall submit daily written reports to the Quality Control Supervisory Representative reporting the quality of masonry construction.

PART 2 PRODUCTS

2.1 GENERAL REQUIREMENTS

The source of materials which will affect the appearance of the finished work shall not be changed after the work has started except with Contracting Officer's approval.

2.2 CONCRETE BRICK

Concrete brick shall conform to ASTM C 55, Type I, Grade [N-I] [N] [S] [S-II]. Concrete brick may be used where necessary for filling out in concrete masonry unit construction.

2.3 CONCRETE MASONRY UNITS (CMU)

Hollow and solid concrete masonry units shall conform to ASTM C 90, Grade N, Type I, Lightweight. Cement shall have a low alkali content and be of one brand.

2.3.1 Aggregates

Lightweight aggregates and blends of lightweight and heavier aggregates in proportions used in producing the units, shall comply with the following requirements when tested for stain-producing iron compounds in accordance with ASTM C 641: by visual classification method, the iron stain deposited on the filter paper shall not exceed the "light stain" classification.

2.3.2 Kinds and Shapes

Units shall be modular in size and shall include closer, jamb, header, lintel, and bond beam units and special shapes and sizes to complete the work as indicated. In exposed interior masonry surfaces, units having a bullnose shall be used for vertical external corners except at door, window, and louver jambs. Radius of the bullnose shall be 25 mm (1 inch). (1 inch.) Units used in exposed masonry surfaces in any one building shall have a uniform fine to medium texture and a uniform color.

2.3.2.1 Architectural Units

Units shall have patterned face shell. Face shell pattern shall be split ribbed. Units shall be integrally colored during manufacture. Color shall be Basalite Block Split Face Color 619 with mortar to match. Patterned face shell shall be properly aligned in the completed wall.

2.3.2.2 Patterned, Decorative Screen Units

Patterned, decorative screen units shall conform to the applicable requirements of [ASTM C 90] [ASTM C 129]. Units shall have uniform through-the-wall pattern, color, and texture.

2.3.3 Fire-Rated CMU

Concrete masonry units used in fire-rated construction shown on the drawings shall be of minimum equivalent thickness for the fire rating indicated and the corresponding type of aggregates indicated in TABLE I. Units containing more than one of the aggregates listed in TABLE I will be rated on the aggregate requiring the greater minimum equivalent thickness to produce the required fire rating.

TABLE I

FIRE-RATED CONCRETE MASONRY UNITS
See note (a) below

Minimum equivalent thickness in mm (inches) for fire rating of:

Aggregate Type	**4 Hours**	**3 Hours**	**2 Hours**
Pumice	120 (4.7)	100 (4.0)	75 (3.0)
Expanded slag	130 (5.0)	110 (4.2)	85 (3.3)
Expanded clay, shale, or slate	145 (5.7)	120 (4.8)	95 (3.7)
Limestone, scoria, cinders or unexpanded slag	150 (5.9)	130 (5.0)	100 (4.0)
Calcareous gravel	160 (6.2)	135 (5.3)	105 (4.2)
Siliceous gravel	170 (6.7)	145 (5.7)	115 (4.5)

(a) Minimum equivalent thickness shall equal net volume as determined in conformance with ASTM C 140 divided by the product of the actual length and height of the face shell of the unit in millimeters. (inches.) Where walls are to receive plaster or be faced with brick, or otherwise form an assembly; the thickness of plaster or brick or other material in the assembly will be included in determining the equivalent thickness.

2.4 MORTAR

Mortar shall be Type S in accordance with the proportion specification of ASTM C 270 except Type S cement-lime mortar proportions shall be 1 part cement, 1/2 part lime and 4-1/2 parts aggregate. Masonry cements or plastic cements shall not be used in the mortar. Evaluation of performance shall be based on ASTM C 780 and ASTM C 1072. Mortar for prefaced concrete masonry unit wainscots shall contain aggregates with 100 percent passing the 2.36 mm (No. 8) sieve and 95 percent passing the 1.18 mm (No. 16) sieve. Pointing mortar in showers and kitchens shall contain ammonium stearate, or aluminum tri-stearate, or calcium stearate in an amount equal to 3 percent by weight of cement used. Cement shall have a low alkali content and be of one brand. Aggregates shall be from one source.

2.4.1 Admixtures

In cold weather, a non-chloride based accelerating admixture may be used subject to approval. Accelerating admixture shall be non-corrosive, shall contain less than 0.2 percent chlorides, and shall conform to ASTM C 494, Type C.

2.4.2 Coloring

Mortar coloring shall be added to the mortar used for exposed masonry surfaces to produce a uniform color matching. Mortar coloring shall not exceed 3 percent of the weight of cement for carbon black and ten percent of the weight of cement for all other pigments. Mortar coloring shall be chemically inert, of finely ground limeproof pigment, and furnished in accurately pre-measured and packaged units that can be added to a measured amount of cement.

2.5 GROUT

Grout shall conform to ASTM C 476. Cement used in grout shall have a low alkali content. Grout slump shall be between 200 and 250 mm. (8 and 10 inches.) Grout shall be used subject to the limitations of Table III. Proportions shall not be changed and materials with different physical or chemical characteristics shall not be used in grout for the work unless additional evidence is furnished that the grout meets the specified requirements.

2.5.1 Admixtures

In cold weather, a non-chloride based accelerating admixture may be used subject to approval. Accelerating admixture shall be non-corrosive, shall contain less than 0.2 percent chlorides, and shall conform to ASTM C 494, Type C.

2.5.2 Grout Barriers

Grout barriers for vertical cores shall consist of fine mesh wire, fiberglass, or expanded metal.

2.6 ANCHORS, TIES, AND BAR POSITIONERS

Anchors and ties shall be fabricated without drips or crimps and shall be zinc-coated in accordance with ASTM A 153, Class B-2. Steel wire used for anchors and ties shall be fabricated from steel wire conforming to ASTM A 82. Anchors and ties shall be sized to provide a minimum of 16 mm (5/8 inch) mortar cover from either face.

2.6.1 Bar Positioners

Bar positioners, used to prevent displacement of reinforcing bars during the course of construction, shall be factory fabricated from 9 gauge steel wire or equivalent, and coated with a hot-dip galvanized finish. Not more than one wire shall cross the cell.

2.7 REINFORCING STEEL BARS AND RODS

Reinforcing steel bars and rods shall conform to ASTM A 615, Grade 60.

2.8 CONTROL JOINT KEYS

Control joint keys shall be a factory fabricated solid section of natural or synthetic rubber (or combination thereof) conforming to ASTM D 2000 or polyvinyl chloride conforming to ASTM D 2287. The material shall be resistant to oils and solvents. The control joint key shall be provided with a solid shear section not less than 16 mm (5/8 inch) thick and 10 mm (3/8 inch) thick flanges, with a tolerance of plus or minus 2 mm (1/16 inch). The control joint key shall fit neatly, but without forcing, in masonry unit jamb sash grooves. The control joint key shall be flexible at a temperature of minus 34 degrees C (minus 30 degrees F) after five hours exposure, and shall have a durometer hardness of not less than 70 when tested in accordance with ASTM D 2240.

2.9 EXPANSION-JOINT MATERIALS

Backer rod and sealant shall be adequate to accommodate joint compression equal to 50 percent of the width of the joint. The backer rod shall be compressible rod stock of polyethylene foam, polyurethane foam, butyl rubber foam, or other flexible, nonabsorptive material as recommended by the sealant manufacturer. Sealant shall conform to Section 07920 JOINT SEALING.

2.10 FLASHING

Flashing shall be as specified in Section 07600 SHEET METALWORK, GENERAL.

PART 3 EXECUTION

3.1 ENVIRONMENTAL REQUIREMENTS

3.1.1 Hot Weather Installation

The following precautions shall be taken if masonry is erected when the ambient air temperature is more than 37 degrees C (99 degrees F) in the shade and the relative humidity is less than 50 percent. All masonry materials shall be shaded from direct sunlight; mortar beds shall be spread no more than 1.2 m (4 feet) ahead of masonry; masonry units shall be set within one minute of spreading mortar; and after erection, masonry shall be protected from direct exposure to wind and sun for 48 hours.

3.1.2 Cold Weather Installation

Before erecting masonry when ambient temperature or mean daily air temperature falls below 4 degrees C, (40 degrees F,) a written statement of proposed cold weather construction procedures shall be submitted for approval. The following precautions shall be taken during all cold weather erection.

3.1.2.1 Preparation

Ice or snow formed on the masonry bed shall be thawed by the application of heat. Heat shall be applied carefully until the top surface of the masonry is dry to the touch. Sections of masonry deemed frozen and damaged shall be removed before continuing construction of those sections.

a. Air Temperature 4 to 0 degrees C. (40 to 32 Degrees F.) Sand or mixing water shall be heated to produce mortar temperatures between 4 degrees C and 49 degrees C. (40 degrees F and 120 degrees F.)

b. Air Temperature 0 to minus 4 degrees C. (32 to 25 Degrees F.) Sand and mixing water shall be heated to produce mortar temperatures between 4 degrees C and 49 degrees C. (40 degrees F and 120 degrees F.) Temperature of mortar on boards shall be maintained above freezing.

c. Air Temperature minus 4 to minus 7 degrees C. (25 to 20 Degrees F.) Sand and mixing water shall be heated to provide mortar temperatures between 4 degrees C and 49 degrees C. (40 degrees F and 120 degrees F.) Temperature of mortar on boards shall be maintained above freezing. Sources of heat shall be used on both sides of walls under construction. Windbreaks shall be employed when wind is in excess of 24 km/hour. (15 mph.)

d. Air Temperature minus 7 degrees C (20 Degrees F) and below. Sand and mixing water shall be heated to provide mortar temperatures between 4 degrees C and 49 degrees C. (40 degrees F and 120 degrees F.) Enclosure and auxiliary heat shall be provided to maintain air temperature above 0 degrees C. (32 degrees F.) Temperature of units when laid shall not be less than minus 7 degrees C. (20 degrees F.)

3.1.2.2 Completed Masonry and Masonry Not Being Worked On

a. Mean daily air temperature 4 degrees C to 0 degrees C. (40 degrees F to 32 degrees F.) Masonry shall be protected from rain or snow for 24 hours by covering with weather-resistive membrane.

b. Mean daily air temperature 0 degrees C to minus 4 degrees C. (32 degrees F to 25 degrees F.) Masonry shall be completely covered with weather-resistant membrane for 24 hours.

c. Mean Daily Air Temperature minus 4 degrees C to minus 7 degrees C. (25 Degrees F to 20 Degrees F.) Masonry shall be completely covered with insulating blankets or equally protected for 24 hours.

d. Mean Daily Temperature minus 7 degrees C (20 Degrees F) and Below. Masonry temperature shall be maintained above 0 degrees C (32 degrees F) for 24 hours by enclosure and supplementary heat, by electric heating blankets, infrared heat lamps, or other approved methods.

3.2 LAYING MASONRY UNITS

Masonry units shall be laid in running bond pattern. Facing courses shall be level with back-up courses, unless the use of adjustable ties has been approved in which case the tolerances shall be plus or minus 13 mm. (1/2 inch.) Each unit shall be adjusted to its final position while mortar is still soft and plastic. Units that have been disturbed after the mortar has stiffened shall be removed, cleaned, and relaid with fresh mortar. Air spaces, cavities, chases, expansion joints, and spaces to be grouted shall be kept free from mortar and other debris. Units used in exposed masonry surfaces shall be free from chipped edges or other imperfections detracting from the appearance of the finished work. Vertical joints shall be kept plumb. Units being laid and surfaces to receive units shall be free of water film and frost. Units shall be shoved into place so that the vertical joints are tight. Vertical joints of brick and the vertical face shells of concrete masonry units, except where indicated at control, expansion, and isolation joints, shall be completely filled with mortar. Mortar will be permitted to protrude up to 13 mm (1/2 inch) into the space or cells to be grouted. Means shall be provided to prevent mortar from dropping into the space below.

3.2.1 Surface Preparation

Surfaces upon which masonry is placed shall be cleaned of laitance, dust, dirt, oil, organic matter, or other foreign materials and shall be slightly roughened to provide a surface texture with a depth of at least 3 mm. (1/8 inch.) Sandblasting shall be used, if necessary, to remove laitance from pores and to expose the aggregate.

3.2.2 Forms and Shores

Forms and shores shall be sufficiently rigid to prevent deflections which may result in cracking or other damage to supported masonry and sufficiently tight to prevent leakage of mortar and grout. Supporting forms and shores shall not be removed in less than 10 days.

3.2.3 Concrete Masonry Units

Units in piers, pilasters, columns, starting courses on footings, solid foundation walls, lintels, and beams, and where cells are to be filled with grout shall be full bedded in mortar under both face shells and webs. Other units shall be full bedded under both face shells. Head joints shall be filled solidly with mortar for a distance in from the face of the unit not less than the thickness of the face shell. Foundation walls below grade shall be grouted solid. Jamb units shall be of the shapes and sizes to conform with wall units. Solid units may be incorporated in the masonry work where necessary to fill out at corners, gable slopes, and elsewhere as approved. Walls and partitions shall be adequately reinforced for support of wall-hung plumbing fixtures when chair carriers are not specified.

3.2.4 Tolerances

Masonry shall be laid plumb, true to line, with courses level. Bond pattern shall be kept plumb throughout. Corners shall be square unless noted otherwise. Except for walls constructed of prefaced concrete masonry units, masonry shall be laid within the following tolerances (plus or minus unless otherwise noted):

TABLE II
TOLERANCES

Variations from the plumb in the lines and surfaces of columns, walls and arises:	
In adjacent masonry units	3 mm (1/8 inch)
In 3 m (10 feet)	6 mm (1/4 inch)
In 6 m (20 feet)	10 mm (3/8 inch)
In 12 m (40 feet) or more	13 mm (1/2 inch)
Variations from the plumb for external corners, expansion joints, and other conspicuous lines:	
In 6 m (20 feet)	6 mm (1/4 inch)
In 12 m (40 feet) or more	13 mm (1/2 inch)
Variations from the level for exposed lintels, sills, parapets, horizontal grooves, and other conspicuous lines:	
In 6 m (20 feet)	6 mm (1/4 inch)
In 12 m (40 feet) or more	13 mm (1/2 inch)
Variation from level for bed joints and top surfaces of bearing walls:	
In 3 m (10 feet)	6 mm (1/4 inch)
In 12 m (40 feet) or more	13 mm (1/2 inch)
Variation from horizontal lines:	
In 3 m (10 feet)	6 mm (1/4 inch)
In 6 m (20 feet)	10 mm (3/8 inch)
In 12 m (40 feet) or more	13 mm (1/2 inch)
Variations in cross sectional dimensions of columns and in thickness of walls:	
Minus	6 mm (1/4 inch)
Plus	13 mm (1/2 inch)

3.2.5 Cutting and Fitting

Full units of the proper size shall be used wherever possible, in lieu of cut units. Cutting and fitting, including that required to accommodate the work of others, shall be done by masonry mechanics using power masonry saws. Concrete masonry units may be wet or dry cut. Wet cut units, before being placed in the work, shall be dried to the same surface-dry appearance as uncut units being laid in the wall. Cut edges shall be clean, true and sharp. Openings in the masonry shall be made carefully so that wall plates, cover plates or escutcheons required by the installation will completely conceal the openings and will have bottoms parallel with the masonry bed joints. Reinforced masonry lintels shall be provided above openings over 300 mm (12 inches) wide for pipes, ducts, cable trays, and other wall penetrations, unless steel sleeves are used.

3.2.6 Jointing

Joints shall be tooled when the mortar is thumbprint hard. Horizontal joints shall be tooled last. Joints shall be brushed to remove all loose and excess mortar. Mortar joints shall be finished as follows:

3.2.6.1 Flush Joints

Joints in concealed masonry surfaces and joints at electrical outlet boxes in wet areas shall be flush cut. Flush cut joints shall be made by cutting off the mortar flush with the face of the wall. Joints in unparged masonry walls below grade shall be pointed tight. Flush joints for architectural units, such as fluted units, shall completely fill both the head and bed joints.

3.2.6.2 Tooled Joints

Joints in exposed exterior and interior masonry surfaces shall be tooled [slightly concave] [_____]. Joints shall be tooled with a jointer slightly larger than the joint width so that complete contact is made along the edges of the unit. Tooling shall be performed so that the mortar is compressed and the joint surface is sealed. Jointer of sufficient length shall be used to obtain a straight and true mortar joint.

3.2.6.3 Door and Window Frame Joints

On the exposed interior side of exterior frames, joints between frames and abutting masonry walls shall be raked to a depth of 10 mm. (3/8 inch.) On the exterior side of exterior frames, joints between frames and abutting masonry walls shall be raked to a depth of 10 mm. (3/8 inch.)

3.2.7 Joint Widths

Joint widths shall be as follows:

3.2.7.1 Concrete Masonry Units

Concrete masonry units shall have 10 mm (3/8 inch) joints, except for prefaced concrete masonry units.

3.2.8 Embedded Items

Spaces around built-in items shall be filled with mortar. Openings around flush-mount electrical outlet boxes in wet locations shall be pointed with mortar. Anchors, ties, wall plugs, accessories, flashing, pipe sleeves and other items required to be built-in shall be embedded as the masonry work progresses. Anchors, ties and joint reinforcement shall be fully embedded in the mortar. Cells receiving anchor bolts and cells of the first course below bearing plates shall be filled with grout.

3.2.9 Unfinished Work

Unfinished work shall be stepped back for joining with new work. Toothing may be resorted to only when specifically approved. Loose mortar shall be removed and the exposed joints shall be thoroughly cleaned before laying new work.

3.2.10 Masonry Wall Intersections

Each course shall be masonry bonded at corners and elsewhere as shown. Masonry walls shall be anchored or tied together at corners and intersections with bond beam reinforcement and prefabricated corner or tee pieces of joint reinforcement as shown.

3.2.11 Partitions

Partitions shall be continuous from floor to underside of floor or roof deck where shown. Openings in firewalls around joists or other structural members shall be filled as indicated or approved. Where suspended ceilings on both sides of partitions are indicated, the partitions other than those shown to be continuous may be stopped approximately 300mm (12 inches) above the ceiling level. An isolation joint shall be placed in the intersection between partitions and structural or exterior walls as shown. Cells within vertical plane of ties shall be filled solid with grout for full height of partition or solid masonry units may be used.

3.3 MORTAR

Mortar shall be mixed in a mechanically operated mortar mixer for at least 3 minutes, but not more than 5 minutes. Measurement of ingredients for mortar shall be by volume. Ingredients not in containers, such as sand, shall be accurately measured by the use of measuring boxes. Water shall be mixed with the dry ingredients in sufficient amount to provide a workable mixture which will adhere to the vertical surfaces of masonry units. Mortar that has stiffened because of loss of water through evaporation shall be retempered by adding water to restore the proper consistency and workability. Mortar that has reached its initial set or that has not been used within 2 hours after mixing shall be discarded.

3.4 REINFORCING STEEL

Reinforcement shall be cleaned of loose, flaky rust, scale, grease, mortar, grout, or other coating which might destroy or reduce its bond prior to placing grout. Bars with kinks or bends not shown on the drawings shall not be used. Reinforcement shall be placed prior to grouting. Unless otherwise indicated, vertical wall reinforcement shall extend to within 50 mm (2 inches) of tops of walls.

3.4.1 Positioning Bars

Vertical bars shall be accurately placed within the cells at the positions indicated on the drawings. A minimum clearance of 13 mm (1/2 inch) shall be maintained between the bars and masonry units. Minimum clearance between parallel bars shall be one diameter of the reinforcement. Vertical reinforcing may be held in place using bar positioners located near the ends of each bar and at intermediate intervals of not more than 192 diameters of the reinforcement. Column and pilaster ties shall be wired in position around the vertical steel. Ties shall be in contact with the vertical reinforcement and shall not be placed in horizontal bed joints.

3.4.2 Splices

Bars shall be lapped a minimum of 48 diameters of the reinforcement. Welded or mechanical connections shall develop at least 125 percent of the specified yield strength of the reinforcement.

3.5 PLACING GROUT

All cells shall be filled with grout. Grout not in place within 1-1/2 hours after water is first added to the batch shall be discarded. Sufficient time shall be allowed between grout lifts to preclude displacement or cracking of face shells of masonry units. If blowouts, flowouts, misalignment, or cracking of face shells should occur during construction, the wall shall be torn down and rebuilt.

3.5.1 Vertical Grout Barriers for Fully Grouted Walls

Grout barriers shall be provided not more than 10 m (30 feet) apart, or as required, to limit the horizontal flow of grout for each pour.

3.5.2 Cleanouts for Hollow Unit Masonry Construction

Cleanout holes shall be provided at the bottom of every pour in cores containing vertical reinforcement when the height of the grout pour exceeds 1.5 m. (5 feet.) Where all cells are to be grouted, cleanout courses shall be constructed using bond beam units in an inverted position to permit cleaning of all cells. Cleanout holes shall be provided at a maximum spacing of 800 mm (32 inches) (32 inches) where all cells are to be filled with grout. A new series of cleanouts shall be established if grouting operations are stopped for more than 4 hours. Cleanouts shall not be less than 75 by 100 mm (3 by 4 inch) openings cut from one face shell. Manufacturer's standard cutout units may be used at the Contractor's option. Cleanout holes shall not be closed until masonry work, reinforcement, and final cleaning of the grout spaces have been completed and inspected. For walls which will be exposed to view, cleanout holes shall be closed in an approved manner to match surrounding masonry.

3.5.3 Grouting Equipment

3.5.3.1 Grout Pumps

Pumping through aluminum tubes will not be permitted. Pumps shall be operated to produce a continuous stream of grout without air pockets, segregation, or contamination. Upon completion of each day's pumping, waste materials and debris shall be removed from the equipment, and disposed of outside the masonry.

3.5.3.2 Vibrators

Internal vibrators shall maintain a speed of not less than 5,000 impulses per minute when submerged in the grout. At least one spare vibrator shall be maintained at the site at all times. Vibrators shall be applied at uniformly spaced points not further apart than the visible effectiveness of the machine. Duration of vibration shall be limited to time necessary to produce satisfactory consolidation without causing segregation.

3.5.4 Grout Placement

Masonry shall be laid to the top of a pour before placing grout. Grout shall not be placed in two-wythe solid unit masonry cavity until mortar joints have set for at least 3 days during hot weather and 5 days during cold damp weather. Grout shall not be placed in hollow unit masonry until mortar joints have set for at least 24 hours. Grout shall be placed using a hand bucket, concrete hopper, or grout pump to completely fill the grout spaces without segregation of the aggregates. Vibrators shall not be inserted into lower pours that are in a semi-solidified state. The height of grout pours and type of grout used shall be limited by the dimensions of grout spaces as indicated in Table III. Low-lift grout methods may be used on pours up to and including 1.5 m (5 feet) in height. High-lift grout methods shall be used on pours exceeding 1.5 m (5 feet) in height.

3.5.4.1 Low-Lift Method

Grout shall be placed at a rate that will not cause displacement of the masonry due to hydrostatic pressure of the grout. Mortar protruding more than 13 mm (1/2 inch) into the grout space shall be removed before beginning the grouting operation. Grout pours 300 mm (12 inches) or less in height shall be consolidated by mechanical vibration or by puddling. Grout pours over 300 mm (12 inches) in height shall be consolidated by mechanical vibration and reconsolidated by mechanical vibration after initial water loss and settlement has occurred. Vibrators shall not be inserted into lower pours that are in a semi-solidified state. Low-lift grout shall be used subject to the limitations of Table III.

3.5.4.2 High-Lift Method

Mortar droppings shall be cleaned from the bottom of the grout space and from reinforcing steel. Mortar protruding more than 6 mm (1/4 inch) into the grout space shall be removed by dislodging the projections with a rod or stick as the work progresses. Reinforcing, bolts, and embedded connections shall be rigidly held in position before grouting is started. CMU units shall not be pre-wetted. Grout, from the mixer to the point of deposit in the grout space shall be placed as rapidly as practical by pumping and placing methods which will prevent segregation of the mix and cause a minimum of grout splatter on reinforcing and masonry surfaces not being immediately encased in the grout lift. The individual lifts of grout shall be limited to 1.2 m (4 feet) in height. The first lift of grout shall be placed to a uniform height within the pour section and vibrated thoroughly to fill all voids. This first vibration shall follow immediately behind the pouring of the grout using an approved mechanical vibrator. After a waiting period sufficient to permit the grout to become plastic, but before it has taken any set, the succeeding lift shall be poured and vibrated 300 to 450 mm (12 to 18 inches) into the preceding lift. If the placing of the succeeding lift is going to be delayed beyond the period of workability of the preceding, each lift shall be reconsolidated by reworking with a second vibrator as soon as the grout has taken its settlement shrinkage. The waiting, pouring, and reconsolidation steps shall be repeated until the top of the pour is reached. The top lift shall be reconsolidated after the required waiting period. The high-lift grouting of any section of wall between vertical grout barriers shall be completed to the top of a pour in one working day unless a new series of cleanout holes is established and the resulting horizontal construction joint cleaned. High-lift grout shall be used subject to the limitations in Table III.

TABLE III

POUR HEIGHT AND TYPE OF GROUT FOR VARIOUS GROUT SPACE DIMENSIONS
Minimum Dimensions of the Total Clear Areas Within Grout Spaces and Cells in mm and (inches)[1, 2]

Maximum Grout Pour Height[4]	**Grout Type**	**Grouting Procedure**	**Multiwythe Masonry**[3]	**Hollow-unit Masonry**
0.3 m (1 ft)	Fine	Low Lift	20 mm (3/4 in)	40 x 50 mm (1-1/2 x 2 in)
1.5 m (5 ft)	Fine	Low Lift	50 mm (2 in)	50 x 75 mm (2 x 3 in)
2.4 m (8 ft)	Fine	High Lift	50 mm (2 in)	50 x 75 mm (2 x 3 in)
3.6 m (12 ft)	Fine	High Lift	65 mm (2-1/2 in)	65 x 75 mm (2-1/2 x 3 in)
7.3 m (24 ft)	Fine	High Lift	75 mm (3 in)	75 x 75 mm (3 x 3 in)
0.3 m (1 ft)	Coarse	Low Lift	40 mm (1-1/2 in)	40 x 75 mm (1-1/2 x 3 in)
1.5 m (5 ft)	Coarse	Low Lift	50 mm (2 in)	65 x 75 mm (2-1/2 x 3 in)
2.4 m (8 ft)	Coarse	High Lift	50 mm (2 in)	75 x 75 mm (3 x 3 in)
3.6 m (12 ft)	Coarse	High Lift	65 mm (2-1/2 in)	75 x 75 mm (3 x 3 in)
7.3 m (24 ft)	Coarse	High Lift	75 mm (3 in)	75 x 100 mm (3 x 4 in)

Notes:
(1) The actual grout space or cell dimension must be larger than the sum of the following items:
a) The required minimum dimensions of total clear areas given in the table above;
b) The width of any mortar projections within the space;
c) The horizontal projections of the diameters of the horizontal reinforcing bars within a cross section of the grout space or cell.

(2) The minimum dimensions of the total clear areas shall be made up of one or more open areas, with at least one area being 20 mm (3/4 inch) or greater in width.

(3) For grouting spaces between masonry wythes.

(4) Where only cells of hollow masonry units containing reinforcement are grouted, the maximum height of the pour shall not exceed the distance between horizontal bond beams.

3.6 BOND BEAMS

Bond beams shall be filled with grout and reinforced as indicated on the drawings. Reinforcement shall be continuous, including around corners, except through control joints or expansion joints, unless otherwise indicated on the drawings. Where splices are required for continuity, reinforcement shall be lapped 48 bar diameters. A minimum clearance of 13 mm (1/2 inch) shall be maintained between reinforcement and interior faces of units.

3.7 CONTROL JOINTS

Control joints shall be provided as indicated and shall be constructed by using sash jamb units with control joint key in accordance with the details shown on the drawings. Sash jamb units shall have a 19 by 19 mm (3/4 by 3/4 inch) (3/4 by 3/4 inch) groove near the center at end of each unit. The vertical mortar joint at control joint locations shall be continuous, including through all bond beams. This shall be accomplished by utilizing half blocks in alternating courses on each side of the joint. The control joint key shall be interrupted in courses containing continuous bond beam steel. In single wythe exterior masonry walls, the exterior control joints shall be raked to a depth of 20 mm; (3/4 inch;) backer rod and sealant shall be installed in accordance with Section 07920 JOINT SEALING. Exposed interior control joints shall be raked to a depth of 6 mm. (1/4 inch.) Concealed control joints shall be flush cut.

3.8 LINTELS

3.8.1 Masonry Lintels

Masonry lintels shall be constructed with lintel units filled solid with grout in all courses and reinforced with a minimum of two No. 4 bars in the bottom course unless otherwise indicated on the drawings. Lintel reinforcement shall extend beyond each side of masonry opening 40 bar diameters or 600 mm, (24 inches,) whichever is greater. Reinforcing bars shall be supported in place prior to grouting and shall be located 15 mm (1/2 inch) above the bottom inside surface of the lintel unit.

3.9 POINTING AND CLEANING

After mortar joints have attained their initial set, but prior to hardening, mortar and grout daubs or splashings shall be completely removed from masonry-unit surfaces that will be exposed or painted. Before completion of the work, defects in joints of masonry to be exposed or painted shall be raked out as necessary, filled with mortar, and tooled to match existing joints. Immediately after grout work is completed, scum and stains which have percolated through the masonry work shall be removed using a high pressure stream of water and a stiff bristled brush. Masonry surfaces shall not be cleaned, other than removing excess surface mortar, until mortar in joints has hardened. Masonry surfaces shall be left clean, free of mortar daubs, dirt, stain, and discoloration, including scum from cleaning operations, and with tight mortar joints throughout. Metal tools and metal brushes shall not be used for cleaning.

3.9.1 Concrete Masonry Unit and Concrete Brick Surfaces

Exposed concrete masonry unit and concrete brick surfaces shall be dry-brushed at the end of each day's work and after any required pointing, using stiff-fiber bristled brushes.

3.10 BEARING PLATES

Bearing plates for beams, joists, joist girders and similar structural members shall be set to the proper line and elevation with damp-pack bedding mortar, except where non-shrink grout is indicated. Bedding mortar and non-shrink grout shall be as specified in Section 03300 CONCRETE FOR BUILDING CONSTRUCTION.

3.11 PROTECTION

Facing materials shall be protected against staining. Top of walls shall be covered with nonstaining waterproof covering or membrane when work is not in progress. Covering of the top of the unfinished walls shall continue until the wall is waterproofed with a complete roof or parapet system. Covering shall extend a minimum of 600 mm (2 feet) down on each side of the wall and shall be held securely in place. Before starting or resuming, top surface of masonry in place shall be cleaned of loose mortar and foreign material.

3.12 TEST REPORTS

3.12.1 Field Testing of Mortar

At least three specimens of mortar shall be taken each day. A layer of mortar 13 to 16 mm (1/2 to 5/8 inch) thick shall be spread on the masonry units and allowed to stand for one minute. The specimens shall then be prepared and tested for compressive strength in accordance with ASTM C 780.

3.12.2 Field Testing of Grout

Field sampling and testing of grout shall be in accordance with the applicable provisions of ASTM C 1019. A minimum of three specimens of grout per day shall be sampled and tested. Each specimen shall have a minimum ultimate compressive strength of 13.8 MPa (2000 psi) at 28 days.

-- End of Section --

INDEX

SECTION 05055

WELDING, STRUCTURAL

Paragraph		Page
1.1	REFERENCES	05055 - 1
1.2	DEFINITIONS	05055 - 1
1.3	GENERAL REQUIREMENTS	05055 - 1
1.4	SUBMITTALS	05055 - 1
1.5	WELDING PROCEDURE QUALIFICATIONS	05055 - 2
1.6	WELDER, WELDING OPERATOR & TACKER QUALIFICATION	05055 - 3
1.7	INSPECTOR QUALIFICATION	05055 - 4
1.8	SYMBOLS	05055 - 4
1.9	SAFETY	05055 - 4
2.1	WELDING EQUIPMENT & MATERIALS	05055 - 4
3.1	WELDING OPERATIONS	05055 - 4
3.2	QUALITY CONTROL	05055 - 5
3.3	STANDARDS OF ACCEPTANCE	05055 - 5
3.4	GOVERNMENT INSPECTION AND TESTING	05055 - 5
3.5	CORRECTIONS AND REPAIRS	05055 - 5

SECTION 05055
WELDING, STRUCTURAL

PART 1 GENERAL

1.1 REFERENCES

The publications listed below form a part of this specification to the extent referenced. The publications are referred to in the text by basic designation only.

AMERICAN INSTITUTE OF STEEL CONSTRUCTION (AISC)

AISC-04 (1989) Specification for Structural Steel Buildings - Allowable Stress Design and Plastic Design

AMERICAN SOCIETY FOR NONDESTRUCTIVE TESTING (ASNT)

ASNT-01 (1992; Supple) Recommended Practice SNT-TC-1A

AMERICAN WELDING SOCIETY (AWS)

AWS A2.4 (1993) Standard Symbols for Welding, Brazing and Nondestructive Examination

AWS A3.0 (1994) Standard Welding Terms and Definitions

AWS D1.1 (1994) Structural Welding Code - Steel

AWS Z49.1 (1988) Safety in Welding and Cutting

1.2 DEFINITIONS

Definitions of welding terms shall be in accordance with AWS A3.0.

1.3 GENERAL REQUIREMENTS

The design of welded connections shall conform to AISC-04 unless otherwise indicated or specified. Material with welds will not be accepted unless the welding is specified or indicated on the drawings or otherwise approved. Welding shall be as specified in this section, except where additional requirements are shown on the drawings or are specified in other sections. Welding shall not be started until welding procedures, welders, welding operators, and tackers have been qualified and the submittals approved by the Contracting Officer. Qualification testing shall be performed at or near the work site. Each Contractor performing welding shall maintain records of the test results obtained in welding procedure, welder, welding operator, and tacker performance qualifications.

1.4 SUBMITTALS

Government approval is required for submittals with a "GA" designation; submittals having an "FIO" designation are for information only. The following shall be submitted in accordance with Section 01300 SUBMITTAL PROCEDURES:

SD-08 Statements

Welding Procedure Qualifications; GA.

Welder, Welding Operator, and Tacker Qualification; GA.

Inspector Qualification; GA.

Copies of the welding procedure specifications; the procedure qualification test records; and the welder, welding operator, or tacker qualification test records.

SD-18 Records

Quality Control; GA.

A quality assurance plan and records of tests and inspections.

1.5 WELDING PROCEDURE QUALIFICATIONS

Except for prequalified (per AWS D1.1) and previously qualified procedures, each Contractor performing welding shall record in detail and shall qualify the welding procedure specification for any welding procedure followed in the fabrication of weldments. Qualification of welding procedures shall conform to AWS D1.1 and to the specifications in this section. Copies of the welding procedure specification and the results of the procedure qualification test for each type of welding which requires procedure qualification shall be submitted for approval. Approval of any procedure, however, will not relieve the Contractor of the sole responsibility for producing a finished structure meeting all the requirements of these specifications. This information shall be submitted on the forms in Appendix E of AWS D1.1. Welding procedure specifications shall be individually identified and shall be referenced on the detail drawings and erection drawings, or shall be suitably keyed to the contract drawings. In case of conflict between this specification and AWS D1.1, this specification governs.

1.5.1 Previous Qualifications

Welding procedures previously qualified by test may be accepted for this contract without requalification if the following conditions are met:

a. Testing was performed by an approved testing laboratory, technical consultant, or the Contractor's approved quality control organization.

b. The qualified welding procedure conforms to the requirements of this specification and is applicable to welding conditions encountered under this contract.

c. The welder, welding operator, and tacker qualification tests conform to the requirements of this specification and are applicable to welding conditions encountered under this contract.

1.5.2 Prequalified Procedures

Welding procedures which are considered prequalified as specified in AWS D1.1 will be accepted without further qualification. The Contractor shall submit for approval a listing or an annotated drawing to indicate the joints not prequalified. Procedure qualification shall be required for these joints.

1.5.3 Retests

If welding procedure fails to meet the requirements of AWS D1.1, the procedure specification shall be revised and requalified, or at the Contractor's option, welding procedure may be retested in accordance with AWS D1.1. If the welding procedure is qualified through retesting, all test results, including those of test welds that failed to meet the requirements, shall be submitted with the welding procedure.

1.6 WELDER, WELDING OPERATOR, AND TACKER QUALIFICATION

Each welder, welding operator, and tacker assigned to work on this contract shall be qualified in accordance with the applicable requirements of AWS D1.1 and as specified in this section. Welders, welding operators, and tackers who make acceptable procedure qualification test welds will be considered qualified for the welding procedure used.

1.6.1 Previous Qualifications

At the discretion of the Contracting Officer, welders, welding operators, and tackers qualified by test within the previous 6 months may be accepted for this contract without requalification if all the following conditions are met:

a. Copies of the welding procedure specifications, the procedure qualification test records, and the welder, welding operator, and tacker qualification test records are submitted and approved in accordance with the specified requirements for detail drawings.

b. Testing was performed by an approved testing laboratory, technical consultant, or the Contractor's approved quality control organization.

c. The previously qualified welding procedure conforms to the requirements of this specification and is applicable to welding conditions encountered under this contract.

d. The welder, welding operator, and tacker qualification tests conform to the requirements of this specification and are applicable to welding conditions encountered under this contract.

1.6.2 Certificates

Before assigning any welder, welding operator, or tacker to work under this contract, the Contractor shall submit the names of the welders, welding operators, and tackers to be employed, and certification that each individual is qualified as specified. The certification shall state the type of welding and positions for which the welder, welding operator, or tacker is qualified, the code and procedure under which the individual is qualified, the date qualified, and the name of the firm and person certifying the qualification tests. The certification shall be kept on file, and 3 copies shall be furnished. The certification shall be kept current for the duration of the contract.

1.6.3 Renewal of Qualification

Requalification of a welder or welding operator shall be required under any of the following conditions:

a. It has been more than 6 months since the welder or welding operator has used the specific welding process for which he is qualified.

b. There is specific reason to question the welder or welding operator's ability to make welds that meet the requirements of these specifications.

c. The welder or welding operator was qualified by an employer other than those firms performing work under this contract, and a qualification test has not been taken within the past 12 months. Records showing periods of employment, name of employer where welder, or welding operator, was last employed, and the process for which qualified shall be submitted as evidence of conformance.

d. A tacker who passes the qualification test shall be considered eligible to perform tack welding indefinitely in the positions and with the processes for which he is qualified, unless there is some

specific reason to question the tacker's ability. In such a case, the tacker shall be required to pass the prescribed tack welding test.

1.7 INSPECTOR QUALIFICATION

Inspection and nondestructive testing personnel shall be qualified in accordance with the requirements of ASNT-01 for Levels I or II in the applicable nondestructive testing method. The inspector may be supported by assistant welding inspectors who are not qualified to ASNT-01, and assistant inspectors may perform specific inspection functions under the supervision of the qualified inspector.

1.8 SYMBOLS

Symbols shall be in accordance with AWS A2.4, unless otherwise indicated.

1.9 SAFETY

Safety precautions during welding shall conform to AWS Z49.1.

PART 2 PRODUCTS

2.1 WELDING EQUIPMENT AND MATERIALS

All welding equipment, electrodes, welding wire, and fluxes shall be capable of producing satisfactory welds when used by a qualified welder or welding operator performing qualified welding procedures. All welding equipment and materials shall comply with the applicable requirements of AWS D1.1.

PART 3 EXECUTION

3.1 WELDING OPERATIONS

3.1.1 Requirements

Workmanship and techniques for welded construction shall conform to the requirements of AWS D1.1 and AISC-04 When AWS D1.1 and the AISC-04 specification conflict, the requirements of AWS D1.1 shall govern.

3.1.2 Identification

Welds shall be identified in one of the following ways:

a. Written records shall be submitted to indicate the location of welds made by each welder, welding operator, or tacker.

b. Each welder, welding operator, or tacker shall be assigned a number, letter, or symbol to identify welds made by that individual. The Contracting Officer may require welders, welding operators, and tackers to apply their symbol next to the weld by means of rubber stamp, felt-tipped marker with waterproof ink, or other methods that do not cause an indentation in the metal. For seam welds, the identification mark shall be adjacent to the weld at 1 meter (3 foot) intervals. Identification with die stamps or electric etchers shall not be allowed.

3.2 QUALITY CONTROL

Testing shall be done by an approved inspection or testing laboratory or technical consultant, or if approved, the Contractor's inspection and testing personnel may be used instead of the commercial inspection or testing laboratory or technical consultant. The Contractor shall perform visual inspection to determine conformance with paragraph STANDARDS OF ACCEPTANCE. Procedures and techniques for inspection shall be in accordance with applicable requirements of AWS D1.1, except that in radiographic inspection only film types designated as "fine grain," or "extra fine," shall be employed.

3.3 STANDARDS OF ACCEPTANCE

Dimensional tolerances for welded construction, details of welds, and quality of welds shall be in accordance with the applicable requirements of AWS D1.1 and the contract drawings.

3.3.1 Nondestructive Examination

The welding shall be subject to inspection and tests in the mill, shop, and field. Inspection and tests in the mill or shop will not relieve the Contractor of the responsibility to furnish weldments of satisfactory quality. When materials or workmanship do not conform to the specification requirements, the Government reserves the right to reject material or workmanship or both at any time before final acceptance of the structure containing the weldment.

3.3.2 DESTRUCTIVE TESTS

When metallographic specimens are removed from any part of a structure, the Contractor shall make repairs. The Contractor shall employ qualified welders or welding operators, and shall use the proper joints and welding procedures, including peening or heat treatment if required, to develop the full strength of the members and joints cut and to relieve residual stress.

3.4 GOVERNMENT INSPECTION AND TESTING

In addition to the inspection and tests performed by the Contractor for quality control, the Government will perform inspection and testing for acceptance to the extent determined by the Contracting Officer. The costs of such inspection and testing will be borne by the Contractor if unsatisfactory welds are discovered, or by the Government if the welds are satisfactory. The work may be performed by the Government's own forces or under a separate contract for inspection and testing. The Government reserves the right to perform supplemental nondestructive and destructive tests to determine compliance with paragraph STANDARDS OF ACCEPTANCE.

3.5 CORRECTIONS AND REPAIRS

When inspection or testing indicates defects in the weld joints, the welds shall be repaired using a qualified welder or welding operator as applicable. Corrections shall be in accordance with the requirements of AWS D1.1 and the specifications. Defects shall be repaired in accordance with the approved procedures. Defects discovered between passes shall be repaired before additional weld material is deposited. Wherever a defect is removed and repair by welding is not required, the affected area shall be blended into the surrounding surface to eliminate sharp notches, crevices, or corners. After a defect is thought to have been removed, and before rewelding, the area shall be examined by suitable methods to insure that the defect has been eliminated. Repair welds shall meet the inspection requirements for the original welds. Any indication of a defect shall be regarded as a defect, unless reevaluation by nondestructive methods or by surface conditioning shows that no unacceptable defect is present.

-- End of Section --

INDEX

SECTION 05120

STRUCTURAL STEEL

Paragraph		Page
1.1	REFERENCES	05120 - 1
1.2	GENERAL REQUIREMENTS	05120 - 2
1.3	SUBMITTALS	05120 - 2
1.4	STORAGE	05120 - 3
2.1	STRUCTURAL STEEL	05120 - 3
2.2	STEEL PIPE	05120 - 3
2.3	HIGH STRENGTH BOLTS & NUTS	05120 - 3
2.4	CARBON STEEL BOLTS	05120 - 3
2.5	NUTS DIMENSIONAL STYLE	05120 - 3
2.6	WASHERS	05120 - 3
2.7	PAINT	05120 - 3
3.1	FABRICATION	05120 - 3
3.2	ERECTION	05120 - 3

SECTION 05120

STRUCTURAL STEEL

PART 1 GENERAL

1.1 REFERENCES: The publications listed below form a part of this specification to the extent referenced. The publications are in the text by basic designation only.

AMERICAN INSTITUTE OF STEEL CONSTRUCTION (AISC)

AISC-04	(1989) Specification for Structural Steel Buildings - Allowable Stress Design and Plastic Design
AISC S303	(1992) Code of Standard Practice for Steel Buildings and Bridges
AISC S329	(1986) Allowable Stress Design Specification for Structural Joints Using ASTM A325 or ASTM A490 Bolts

AMERICAN SOCIETY FOR TESTING AND MATERIALS (ASTM)

ASTM A 6	(1993b) General Requirements for Rolled Steel Plates, Shapes, Sheet Piling, and Bars for Structural Use
ASTM A 36	(1993a) Structural Steel
ASTM A 53	(1993a) Pipe, Steel, Black and Hot-Dipped, Zinc-Coated Welded and Seamless
ASTM A 307	(1993a) Carbon Steel Bolts and Studs, 60 000 PSI Tensile Strength
ASTM A 325	(1993) Structural Bolts, Steel, Heat Treated, 120/105 ksi Minimum Tensile Strength
ASTM A 563	(1993) Carbon and Alloy Steel Nuts
ASTM A 852	(1993) Quenched and Tempered Low-Alloy Structural Steel Plate with 70 ksi (485 MPa) Minimum Yield Strength to 4 in. (100 mm) Thick
ASTM F 436	(1993) Hardened Steel Washers
ASTM F 844	(1990) Washers, Steel, Plain (Flat), Unhardened for General Use
ASTM F 959	(1993) Compressible-Washer-Type Direct Tension Indicators for Use with Structural Fasteners

AMERICAN WELDING SOCIETY (AWS)

AWS A2.4	(1993) Standard Symbols for Welding, Brazing and Nondestructive Examination
AWS D1.1	(1994) Structural Welding Code - Steel

STEEL STRUCTURES PAINTING COUNCIL (SSPC)

SSPC Paint 25 (1991) Red Iron Oxide, Zinc Oxide, Raw Linseed Oil and Alkyd Primer (without Lead and Chromate Pigments)

1.2 GENERAL REQUIREMENTS: Structural steel fabrication and erection shall be performed by an organization experienced in structural steel work of equivalent magnitude. The Contractor shall be responsible for correctness of detailing, fabrication, and for the correct fitting of structural members. Connections, for any part of the structure not shown on the contract drawings, shall be considered simple shear connections and shall be designed and detailed in accordance with pertinent provisions of AISC-01 and AISC-02. Substitution of sections or modification of connection details will not be accepted unless approved by the Contracting Officer. AISC-04 shall govern the work. Welding shall be in accordance with AWS D1.1. High-strength bolting shall be in accordance with AISC S329.

1.3 SUBMITTALS: Government approval is required for submittals with a "GA" designation; submittals having an "FIO" designation are for information only. The following shall be submitted in accordance with Section 01300 SUBMITTAL PROCEDURES:

SD-04 Drawings

Structural Steel System; GA. Structural Connections; GA.

Shop and erection details including members (with their connections) not shown on the contract drawings. Welds shall be indicated by standard welding symbols in accordance with AWS A2.4.

SD-08 Statements

Erection; FIO.

Erection plan of the structural steel framing required. Erection plan shall conform to the requirements of AISC S303, shall be submitted prior to erection, and shall describe all necessary temporary supports, including the sequence of installation and removal.

SD-13 Certificates

Mill Test Reports; FIO.

Certified copies of mill test reports for structural steel, structural bolts, nuts, washers and other related structural steel items.

Welder Qualifications; GA.

Certified copies of welder qualifications test records showing qualification in accordance with AWS D1.1.

Fabrication; GA.

A copy of the AISC certificate indicating that the fabrication plant meets the specified structural steelwork category.

SD-14 Samples

High Strength Bolts and Nuts; GA. Washers; FIO.

Random samples of bolts, nuts, and washers as delivered to the job site if requested, taken in the presence of the Contracting Officer and provided to the Contracting Officer for testing to establish compliance with specified requirements.

1.4 STORAGE: Material shall be stored out of contact with the ground in such manner and location as will minimize deterioration.

PART 2 PRODUCTS

2.1 STRUCTURAL STEEL

2.1.1 Carbon Grade Steel: Carbon grade steel shall conform to ASTM A 36.

2.2 STEEL PIPE: Steel pipe shall conform to ASTM A 53, Type E, Grade B.

2.3 HIGH STRENGTH BOLTS AND NUTS: High strength bolts shall conform to ASTM A 325, Type 1 with carbon steel nuts conforming to ASTM A 563, Grade C.

2.4 CARBON STEEL BOLTS: Carbon steel bolts shall conform to ASTM A 307, Grade A with carbon steel nuts conforming to ASTM A 563, Grade A.

2.5 NUTS DIMENSIONAL STYLE: Carbon steel nuts shall be Heavy Hex Style when used with ASTM A 307 bolts or Heavy Hex style when used with ASTM A 325 or ASTM A 490 bolts.

2.6 WASHERS: Plain washers shall conform to ASTM F 844.

2.7 PAINT: Paint shall conform to SSPC Paint 25.

PART 3 EXECUTION

3.1 FABRICATION: Fabrication shall be in accordance with the applicable provisions of AISC-04. Fabrication and assembly shall be done in the shop to the greatest extent possible. The fabricating plant shall be certified under the AISC quality certification program for Category I structural steelwork. Compression joints depending on contact bearing shall have a surface roughness not in excess of 12.7 micrometer (500 micro inches) as determined by ASME B46.1, and ends shall be square within the tolerances for milled ends specified in ASTM A 6. Structural steelwork, except surfaces of steel to be encased in concrete, surfaces to be field welded, surfaces to be fireproofed, and contact surfaces of friction-type high-strength bolted connections shall be prepared for painting in accordance with the AISC-04 and primed with the specified paint.

3.2 ERECTION: Erection of structural steel shall be in accordance with the applicable provisions of AISC-04.

3.2.1 Connections: Anchor bolts and other connections between the structural steel and foundations shall be provided and shall be properly located and built into connecting work.

3.2.2 Base Plates and Bearing Plates: Column base plates for columns and bearing plates for beams, girders, and similar members shall be provided. Base plates and bearing plates shall be provided with full bearing after the supported members have been plumbed and properly positioned, but prior to placing superimposed loads. Separate setting plates under column base plates will not be permitted. The area under the plate shall be damp-packed solidly with bedding mortar, except where nonshrink grout is

indicated on the drawings. Bedding mortar and grout shall be as specified in Section 03300 CONCRETE FOR BUILDING CONSTRUCTION.

3.2.3 Field Welded Connections: Field welded structural connections shall be completed before load is applied.

3.2.4 Field Priming: After erection, the field bolt heads and nuts, field welds, and any abrasions in the shop coat shall be cleaned and primed with paint of the same quality as that used for the shop coat.

-- End of Section --

INDEX

SECTION 05300

STEEL DECKING

Paragraph		Page
1.1	REFERENCES	05300 - 1
1.2	SUBMITTALS	05300 - 1
1.3	DELIVERY, STORAGE AND HANDLING	05300 - 2
2.1	DECK UNITS	05300 - 2
2.2	TOUCH-UP PAINT	05300 - 2
2.3	ADJUSTING PLATES	05300 - 3
2.4	CLOSURE PLATES	05300 - 3
2.5	ACCESSORIES	05300 - 3
3.1	ERECTION	05300 - 3
3.2	ATTACHMENTS	05300 - 3
3.3	HOLES AND OPENINGS	05300 - 3
3.4	PREPARATION OF FIRE-PROOFED SURFACES	05300 - 4

SECTION 05300

STEEL DECKING

PART 1 GENERAL

1.1 REFERENCES: The publications listed below form a part of this specification to the extent referenced. The publications are referred to in the text by basic designation only.

AMERICAN INSTITUTE OF STEEL CONSTRUCTION (AISC)

AISC-04 (1989) Specification for Structural Steel Buildings - Allowable Stress Design and Plastic Design

AMERICAN IRON AND STEEL INSTITUTE (AISI)

AISI SG-673 (1987) Cold-Formed Steel Design Manual

AMERICAN SOCIETY FOR TESTING AND MATERIALS (ASTM)

ASTM A 108 (1993) Steel Bars, Carbon, Cold Finished, Standard Quality

ASTM A 446 (1993) Steel Sheet, Zinc-Coated (Galvanized) by the Hot-Dip Process, Structural (Physical) Quality

ASTM A 525 (1993) General Requirements for Steel Sheet, Zinc-Coated (Galvanized) by the Hot-Dip Process

ASTM A 780 (1993a) Repair of Damaged and Uncoated Areas of Hot-Dipped Galvanized Coatings

AMERICAN WELDING SOCIETY (AWS)

AWS D1.1 (1994) Structural Welding Code - Steel

AWS D1.3 (1989) Structural Welding Code - Sheet Steel

STEEL DECK INSTITUTE (SDI)

SDI-02 (1987; Amended 1991) Diaphragm Design Manual

1.2 SUBMITTALS: Government approval is required for submittals with a "GA" designation; submittals having an "FIO" designation are for information only. The following shall be submitted in accordance with Section 01300 SUBMITTAL PROCEDURES:

SD-01 Data

Deck Units; GA.

Design computations for the structural properties of the deck units or SDI certification that the units are designed in accordance with SDI specifications.

SD-04 Drawings

Deck Units; GA. Accessories; GA.

Attachments; GA. Holes and Openings; GA.

Drawings shall include type, configuration, structural properties, location, and necessary details of deck units, accessories, and supporting members; size and location of holes to be cut and reinforcement to be provided; location and sequence of welded [or fastener] connections; and the manufacturer's erection instructions.

SD-13 Certificates

Deck Units; FIO. Attachments; FIO.

Manufacturer's certificates attesting that the decking material meets the specified requirements. Manufacturer's certificate attesting that the operators are authorized to use the low-velocity piston tool.

SD-14 Samples

Deck Units; FIO. Accessories; FIO.

A 2 sq. ft. sample of the decking material to be used, along with a sample of each of the accessories used. A sample of acoustical material to be used shall be included.

SD-18 Statements

Attachments; GA.

Prior to welding operations, copies of qualified procedures and lists of names and identification symbols of qualified welders and welding operators.

1.3 DELIVERY, STORAGE, AND HANDLING: Deck units shall be delivered to the site in a dry and undamaged condition, stored off the ground with one end elevated, and stored under a weathertight covering permitting good air circulation. Finish of deck units shall be maintained at all times by using touch-up paint whenever necessary to prevent the formation of rust.

PART 2 PRODUCTS

2.1 DECK UNITS: Deck units shall conform to SDI Pub No 28. Panels of maximum possible lengths shall be used to minimize end laps. Fabricate deck units in lengths to span 3 or more supports with flush, telescoped, or nested 2 inch laps at ends, and interlocking, or nested side laps, unless otherwise indicated. Deck with cross-sectional configuration differing from the units indicated may be used, provided that the properties of the proposed units, determined in accordance with AISI SG-673, are equal to or greater than the properties of the units indicated and that the material will fit the space provided without requiring revisions to adjacent materials or systems.

2.1.1 Roof Deck: Steel deck used in conjunction with insulation and built-up roofing shall conform to ASTM A 446. Roof deck units shall be fabricated of the steel design thickness required by the design drawings and shall be zinc-coated in conformance with ASTM A 525, G90 coating class.

2.2 TOUCH-UP PAINT: Touch-up paint for zinc-coated units shall be an approved galvanizing repair paint with a high-zinc dust content. Welds shall be touched-up with paint conforming to SSPC Paint 20 in accordance with ASTM A 780. Finish of deck units and accessories shall be maintained by using touch-up paint whenever necessary to prevent the formation of rust.

2.3 ADJUSTING PLATES: Adjusting plates or segments of deck units shall be provided in locations too narrow to accommodate full-size units. As far as practical, the plates shall be the same thickness and configuration as the deck units.

2.4 CLOSURE PLATES

2.4.1 Closure Plates for Roof Deck: Voids above interior walls shall be closed with sheet metal where shown. Open deck cells at parapets, end walls, eaves, and openings through roofs shall be closed with sheet metal. Sheet metal shall be same thickness as deck units.

2.4.2.1 Cover Plates to Close Panels: Cover plates to close panel edge and end conditions and where panels change direction or abut.

2.4.2.3 Sheet Metal: Where deck is cut for passage of pipes, ducts, columns, etc., and deck is to remain exposed, provide a neatly cut sheet metal collar to cover edges of deck. Do not cut deck until after installation of supplemental supports.

2.5 ACCESSORIES: The manufacturer's standard accessories shall be furnished as necessary to complete the deck installation. Metal accessories shall be of the same material as the deck and have minimum design thickness as follows: saddles, 0.0474 inch; welding washers, 0.0598 inch; cant strip, 0.0295 inch; other metal accessories, 0.0358 inch; unless otherwise indicated. Accessories shall include but not be limited to saddles, welding washers, cant strips, butt cover plates, underlapping sleeves, and ridge and valley plates.

PART 3 EXECUTION

3.1 ERECTION: Erection of deck and accessories shall be in accordance with SDI-02 and the approved detail drawings. Damaged deck and accessories including material which is permanently stained or contaminated, with burned holes or deformed shall not be installed. The deck units shall be placed on secure supports, properly adjusted, and aligned at right angles to supports before being permanently secured in place. The deck shall not be used for storage or as a working platform until the units have been secured in position. Loads shall be distributed by appropriate means to prevent damage during construction and to the completed assembly. The maximum uniform distributed storage load shall not exceed the design live load. There shall be no loads suspended directly from the steel deck. Acoustical material shall be neatly fitted into the rib voids.

3.2 ATTACHMENTS: All fasteners shall be installed in accordance with the manufacturer's recommended procedure, except as otherwise specified. The deck units shall be welded with nominal 5/8 inch diameter puddle welds to supports as indicated on the design drawings and in accordance with requirements of SDI Pub No 28. All welding of steel deck shall be in accordance with AWS D1.3 using methods and electrodes as recommended by the manufacturer of the steel deck being used. Welds shall be made only by operators previously qualified by tests prescribed in AWS D1.3 to perform the type of work required. Welding washers shall not be used at the connections of the deck to supports. Welding washers shall not be used at sidelaps. Holes and similar defects will not be acceptable. Deck ends shall be 2 inches. All partial or segments of deck units shall be attached to structural supports in accordance with Section 2.5 of SDI-02.

3.3 HOLES AND OPENINGS: All holes and openings required shall be coordinated with the drawings, specifications, and other trades. Holes and openings shall be drilled or cut, reinforced and framed as indicated on the drawings or described in the specifications and as required for rigidity and load capacity. Holes and openings less than 6 inches across require no reinforcement. Holes and openings 6 to 12 inches across shall be reinforced by 0.0474 inch thick steel sheet at least 12 inches wider and longer

than the opening and be fastened to the steel deck at each corner of the sheet and at a maximum of 6 inches on center around the perimeter of the reinforcing plate. Holes and openings larger than 12 inches shall be reinforced by steel angles installed perpendicular to the steel joists and supported by the adjacent steel joists. Steel angles shall be installed perpendicular to the deck ribs and shall be fastened to the angles perpendicular to the steel joists. Openings must not interfere with seismic members such as chords and drag struts.

3.4 PREPARATION OF FIRE-PROOFED SURFACES: Deck surfaces, both composite and noncomposite, which are to receive sprayed-on fireproofing, shall be galvanized and shall be free of all grease, mill oil, paraffin, dirt, salt, and other contaminants which impair adhesion of the fireproofing. Any required cleaning shall be done prior to steel deck installation using a cleaning method that is compatible with the sprayed-on fireproofing.

-- End of Section --

INDEX

SECTION 05500

MISCELLANEOUS METAL

Paragraph		Page
1.1	REFERENCES	05500-1
1.2	SUBMITTALS	05500-1
1.3	GENERAL REQUIREMENTS	05500-2
1.4	DISSIMILAR MATERIALS	05500-2
1.5	WORKMANSHIP	05500-2
1.6	ANCHORAGE	05500-2
2.1	SHOP PAINTING	05500-2
2.2	ACCESS DOORS AND PANELS	05500-2
2.3	HANDRAILS	05500-2
2.4	MISCELLANEOUS	05500-3
2.5	RIFLE RACKS ANCHORS	05500-3
2.6	ROLL-UP FLOOR MATS	05500-3
2.7	GRILLE DOOR	05500-3
2.8	STEEL DOOR FRAMES	05500-3
2.9	TRENCH COVERS, FRAMES AND LINERS	05500-3
3.1	GENERAL REQUIREMENTS	05500-3
3.2	REMOVABLE ACCESS PANELS	05500-3
3.3	ATTACHMENT OF HANDRAILS	05500-4
3.4	RECESSED FLOOR MATS	05500-4
3.5	DOOR FRAMES	05500-4
3.6	TRENCH FRAMES AND COVERS	05500-4
3.7	BAR-GRILLE DOOR	05500-4
3.8	RIFLE RACKS ANCHORS	05500-4

SECTION 05500

MISCELLANEOUS METAL

PART 1 GENERAL

1.1 REFERENCES:

The publications listed below form a part of this specification to the extent referenced. The publications are referred to in the text by basic designation only.

AMERICAN SOCIETY FOR TESTING AND MATERIALS (ASTM)

ASTM A 53	(1993a) Pipe, Steel, Black and Hot-Dipped, Zinc-Coated Welded and Seamless
ASTM A 123	(1989a) Zinc (Hot-Dip Galvanized) Coatings on Iron and Steel Products
ASTM A 446	(1993) Steel Sheet, Zinc-Coated (Galvanized) by the Hot-Dip Process, Structural (Physical) Quality
ASTM A 500	(1993) Cold-Formed Welded and Seamless Carbon Steel Structural Tubing in Rounds and Shapes

AMERICAN WELDING SOCIETY (AWS)

AWS D1.1	(1994) Structural Welding Code - Steel

NATIONAL ASSOCIATION OF ARCHITECTURAL METAL MANUFACTURERS (NAAMM)

NAAMM-01	(1988) Metal Finishes Manual for Architectural and Metal Products

1.2 SUBMITTALS: Government approval is required for submittals with a "GA" designation; submittals having an "FIO" designation are for information only. The following shall be submitted in accordance with Section 01300 SUBMITTAL PROCEDURES:

SD-04 Drawings

Miscellaneous Metal Items; GA.

Detail drawings indicating material thickness, type, grade, and class; dimensions; and construction details. Drawings shall include catalog cuts, erection details, manufacturer's descriptive data and installation instructions, and templates. Detail drawings for the following items: Handrails, trench covers, roll-up floor mats, all miscellaneous plates, angles, saddles, brackets and items.

SD-14 Samples

Miscellaneous Metal Items; GA.

Samples of the following items: access doors, roll-up floormats. Samples shall be full size, taken from manufacturer's stock, and shall be complete as required for installation in the structure. Samples may be installed in the work, provided each sample is clearly identified and its location recorded.

1.3 GENERAL REQUIREMENTS: The Contractor shall verify all measurements and shall take all field measurements necessary before fabrication. Welding to or on structural steel shall be in accordance with AWS D1.1. Items specified to be galvanized, when practicable and not indicated otherwise, shall be hot-dip galvanized after fabrication. Galvanizing shall be in accordance with ASTM A 123, ASTM A 446, or ASTM A 525, as applicable. Exposed fastenings shall be compatible materials, shall generally match in color and finish, and shall harmonize with the material to which fastenings are applied. Materials and parts necessary to complete each item, even though such work is not definitely shown or specified, shall be included. Poor matching of holes for fasteners shall be cause for rejection. Fastenings shall be concealed where practicable. Thickness of metal and details of assembly and supports shall provide strength and stiffness. Joints exposed to the weather shall be formed to exclude water.

1.4 DISSIMILAR MATERIALS: Where dissimilar metals are in contact, or where aluminum is in contact with concrete, mortar, masonry, wet or pressure-treated wood, or absorptive materials subject to wetting, the surfaces shall be protected with a coat of bituminous paint or asphalt varnish.

1.5 WORKMANSHIP: Miscellaneous metalwork shall be well formed to shape and size, with sharp lines and angles and true curves. Drilling and punching shall produce clean true lines and surfaces. Welding shall be continuous along the entire area of contact except where tack welding is permitted. Exposed connections of work in place shall not be tack welded. Exposed welds shall be ground smooth. Exposed surfaces of work in place shall have a smooth finish, and unless otherwise approved, exposed riveting shall be flush. Where tight fits are required, joints shall be milled. Corner joints shall be coped or mitered, well formed, and in true alignment. Work shall be accurately set to established lines and elevations and securely fastened in place. Installation shall be in accordance with manufacturer's installation instructions and approved drawings, cuts, and details.

1.6 ANCHORAGE: Anchorage shall be provided where necessary for fastening miscellaneous metal items securely in place. Anchorage not otherwise specified or indicated shall include slotted inserts made to engage with the anchors, expansion shields, and power-driven fasteners when approved for concrete; toggle bolts and through bolts for masonry; machine and carriage bolts for steel; and lag bolts and screws for wood.

PART 2 PRODUCTS

2.1 SHOP PAINTING: Surfaces of ferrous metal except galvanized surfaces, shall be cleaned and shop coated with the manufacturer's standard protective coating unless otherwise specified. Surfaces of items to be embedded in concrete shall not be painted. Items to be finish painted shall be prepared according to manufacturer's recommendations or as specified.

2.2 ACCESS DOORS AND PANELS: Doors and panels shall be flush type unless otherwise indicated. Frames for access doors shall be fabricated of not lighter than 1.519 mm (16 gauge) steel with welded joints and finished with anchorage for securing into construction. Access doors shall be a minimum of 350 by 500 mm (14 by 20 inches) and of not lighter than 1.897 mm (14 gauge) steel, with stiffened edges, complete with attachments. Access doors shall be hinged to frame and provided with a flush face, screw driver operated latch. Exposed metal surfaces shall have a shop applied prime coat.

Access doors shown as stainless steel shall be fabricated from corrosion - resisting steel with satin finish.

2.3 HANDRAILS: Handrails shall be designed to resist a concentrated load of 890 N (200 pounds) in any direction at any point of the top of the rail or 292 Newtons per meter (20 pounds per foot) applied horizontally to top of the rail, whichever is more severe.

2.3.1 Steel Handrails, Including Carbon Steel Inserts: Steel handrails shall be steel pipe conforming to ASTM A 53 or structural tubing conforming to ASTM A 500, Grade A or B of equivalent strength. Steel

railings shall be 40 mm (1-1/2 inch) nominal size. Railings shall be hot-dip galvanized and shop painted. Pipe collars shall be steel.

a. Fabrication: Rail, and corners shall be fabricated by one of the following methods:

(1) Flush type rail fittings of commercial standard, welded and ground smooth with railing splice locks secured with 10 mm (3/8 inch) hexagonal recessed-head setscrews.

(2) Mitered and welded joints by fitting post to top rail and intermediate rail to post, mitering corners, groove welding joints, and grinding smooth. Railing splices shall be butted and reinforced by a tight fitting interior sleeve not less than 150 mm (6 inches) long.

(3) Railings may be bent at corners in lieu of jointing, provided bends are made in suitable jigs and the pipe is not crushed.

b. Brackets shall be provided as indicated.

2.4 MISCELLANEOUS: Miscellaneous plates and shapes for items that do not form a part of the structural steel framework, such as lintels, angle supports, miscellaneous mountings, cane bolts, and frames, shall be provided to complete the work. Exterior metal items shall be galvanized.

2.5 RIFLE RACKS ANCHORS: Anchors shall be bent from steel rods accurately and neatly to the profile shown. Anchors shall be galvanized after fabrication.

2.6 ROLL-UP FLOOR MATS: Roll-up mats shall be of aluminum construction with surface. Roll-up mats shall be for use in recessed area. Construction details of recessed areas shall be shown on the drawings. Carpet type, color and texture shall match floor carpet specified in Section 09680 CARPET.

2.7 GRILLE DOOR: Steel grille door shall be built from vertical round bars punched through horizontal flat bars, welded and ground smooth. Provide lock box to fit lock specified in Section: HARDWARE. Grille door shall be fabricated as detailed and shall be given a shop coat of paint.

2.8 STEEL DOOR FRAMES: Steel door frames built from structural shapes shall be neatly and securely welded with all welds ground smooth. Jambs shall be provided with 50 by 6 by 300 mm (2 by 1/4 by 12 inch) (2 by 1/4 by 12 inch) bent, adjustable metal anchors spaced not over 40 cm (16 inches) on centers. Continuous door stops shall be made of 38 by 16 mm (1-1/2 by 5/8 inch) bars. Assembly shall be galvanized after fabrication.

2.9 TRENCH COVERS, FRAMES, AND LINERS: Trench frames and anchors shall be all welded steel construction designed to match cover. Covers shall be secured to frame with countersunk flathead machine screws spaced 24” on center, and shall be steel floor plate. Trench liners shall be steel with integral frame for cover. Cover shall have lip to receive carpet and shall be made in 8’-0” long sections, maximum.

PART 3 EXECUTION

3.1 GENERAL REQUIREMENTS: All items shall be installed at the locations shown and according to the manufacturer's recommendations. Items listed below require additional procedures as specified.

3.2 REMOVABLE ACCESS PANELS: A removable access panel not less than 300 by 300 mm (12 by 12 inches) shall be installed directly below each valve, flow indicator, damper, or air splitter that is located above the ceiling, other than an acoustical ceiling, and that would otherwise not be accessible.

3.3 ATTACHMENT OF HANDRAILS:

3.3.1 Installation of Steel Handrails: Installation shall be by means of pipe sleeves secured to masonry with expansion shields and bolts or toggle bolts and base plates bolted to structural steel framework. Rail ends shall be secured by steel pipe flanges bolted to a back plate or by 6 mm (1/4 inch) lag bolts to studs or solid backing.

3.4 RECESSED FLOOR MATS: Contractor shall verify field measurements prior to releasing materials for fabrication by the manufacturer. A mat frame shall be used to ensure recess accuracy in size, shape and depth. Drain pit shall be formed by blocking out concrete when frames are installed. Pit shall be dampproofed after concrete has set. Frames shall be assembled onsite and installed so that upper edge will be level with finished floor surface. A cement base shall be screeded inside the mat recess frame area using the edge provided by the frame as a guide. The frame shall be anchored into the cement with anchor pins a minimum of 610 mm (24 inches) on centers.

3.5 DOOR FRAMES: Door frames shall be secured to the wall by means of anchor clips embedded in the masonry. Continuous door stops shall be welded to the frame or tap screwed with countersunk screws at no more than 450 mm (18 inch) centers, assuring in either case full contact with the frame. Frames shall be drilled and tapped as required for hardware.

3.6 TRENCH FRAMES AND COVERS: Trench frames and covers shall finish flush with the floor.

3.7 BAR-GRILLE DOOR: Bar-grille door shall be attached to metal frame with heavy duty hinges specified in Section: HARDWARE.

3.8 RIFLE RACKS ANCHORS: Place anchors accurately at height and spacing shown as masonry installation progresses.

-- End of Section --

INDEX

SECTION 06100

ROUGH CARPENTRY

Paragraph		Page
1.1	REFERENCES	06100-1
1.2	DELIVERY AND STORAGE	06100-2
2.1	LUMBER SHEATHING	06100-2
2.2	ACCESSORIES AND NAILS	06100-3
2.3	INSULATION	06100-3
3.1	INSTALLATION OF FRAMING	06100-4
3.2	INSTALLATION OF PLYWOOD SHEATHING	06100-4
3.3	INSTALLATION OF SUBFLOORING	06100-4
3.4	INSTALLATION OF MISCELLANEOUS WOOD MEMBERS	06100-5
3.5	INSTALLATION OF INSULATION	06100-5

SECTION 06100

ROUGH CARPENTRY

PART 1 GENERAL

1.1 REFERENCES: The publications listed below form a part of this specification to the extent referenced. The publications are referred to in the text by basic designation only.

AMERICAN PLYWOOD ASSOCIATION (APA)

APA E30	(1994) Design/Construction Guide, Residential and Commercial
APA V450	(1993) Source List - Adhesives for APA Glued Floor System

AMERICAN SOCIETY FOR TESTING AND MATERIALS (ASTM)

ASTM A 307	(1994) Carbon Steel Bolts and Studs, 60 000 PSI Tensile Strength
ASTM C 518	(1991) Steady-State Heat Flux Measurements and Thermal Transmission Properties By Means of the Heat Flow Meter Apparatus
ASTM C 552	(1991) Cellular Glass Thermal Insulation
ASTM C 578	(1992) Rigid, Cellular Polystyrene Thermal Insulation
ASTM C 591	(1985) Unfaced Preformed Rigid Cellular Polyurethane Thermal Insulation
ASTM C 612	(1993) Mineral Fiber Block and Board Thermal Insulation
ASTM C 665	(1991) Mineral-Fiber Blanket Thermal Insulation for Light Frame Construction and Manufactured Housing
ASTM C 726	(1993) Mineral Fiber Roof Insulation Board
ASTM C 1013	(1985) Membrane-Faced Rigid Cellular Polyurethane Roof Insulation
ASTM C 1289	(1995) Faced Rigid Cellular Polyisocyanurate Thermal Insulation Board

AMERICAN WOOD PRESERVERS' ASSOCIATION (AWPA)

AWPA C2	(1993) Lumber, Timber, Bridge Ties and Mine Ties - Preservative Treatment by Pressure Processes
AWPA C9	(1993) Plywood - Preservative Treatment by Pressure Processes
AWPA P5	(1993) Standards for Waterborne Preservatives

DEPARTMENT OF COMMERCE (DOC)

DOC PS 1	(1983) Construction and Industrial Plywood

FEDERAL SPECIFICATIONS (FS)

FS HH-I-558	(Rev C) Insulation, Blankets, Thermal (Mineral Fiber, Industrial Type) (Inch-Pound)

WESTERN WOOD PRODUCTS ASSOCIATION (WWPA)

WWPA-01	(1991; Supple No. 3) Western Lumber Grading Rules 91

1.2 DELIVERY AND STORAGE: Materials shall be delivered to the site in undamaged condition, stored off ground in fully covered, well ventilated areas, and protected from extreme changes in temperature and humidity.

PART 2 PRODUCTS

2.1 LUMBER AND SHEATHING

2.1.1 Grading and Marking

2.1.1.1 Lumber Products: Solid sawn lumber shall bear an authorized gradestamp or grademark recongnized by ALSC, or an ALSC recognized certification stamp, mark, or hammerbrand. Surfaces that are to be exposed to view shall not bear grademarks, stamps, or any type of identifying mark. Hammer marking will be permitted on timbers when all surfaces will be exposed to view.

2.1.1.2 Plywood: Materials shall bear the grademark, stamp or other identifying marks indicating grades of material and rules or standards under which produced. Such identifying marks shall be in accordance with the rule or standard under which the material is produced, including requirements for qualifications and authority of the inspection organization, usage of authorized identification, and information included in the identification.

2.1.2 Sizes: Lumber and material sizes shall conform to requirements of the rules or standards under which produced. Unless otherwise specified, lumber shall be surfaced on four sides. Size references, unless otherwise specified, are nominal sizes, and actual sizes shall be within manufacturing tolerances allowed by the standard under which the product is produced.

2.1.3 Moisture Content: At the time lumber and other materials are delivered and when installed in the work their moisture content shall be as follows:

a. Treated Lumber:

100 mm (4 inches) or less, nominal thickness, 19 percent maximum.
125 mm (5 inches) or more, nominal thickness, 23 percent maximum in a
75 mm (3 inch) perimeter of the timber cross-section.

b. Materials Other Than Lumber: In accordance with standard under which product is produced.

2.1.4 Treatment

2.1.4.1 Lumber and Timbers: Lumber and timbers shall be treated in accordance with AWPA C2 with waterborne preservatives listed in AWPA P5 to a retention level as follows:

a. 4 kg per cubic meter (0.25 pcf).

2.1.4.2 Plywood: Plywood shall be treated in accordance with AWPA C9 with waterborne preservatives listed in AWPA P5 to a retention level as follows:

a. 4 kg per cubic meter (0.25 pcf).

2.1.5 Lumber:

2.1.5.1 Trellis Beams: WWPA Timbers - Beams and Stringers - Select Structural DF, selected for good appearance, with preservative treatment.

2.1.5.2 Trellist Joists: WWPA Structural Light Framing DF - Select Structural, selected for good appearance, with preservative treatment.

2.1.5.3 Skylight Framing, console platform supports, roof ridge members, blocking, reinforcing studs, gate vertical strips: WWPA Light Framing DF -Construction, with preservative treatment. Gate vertical strips shall be selected for good appearance.

2.1.6 Roof Sheathing: Plywood shall conform to DOC PS 1, Grade C-D with exterior glue, Group 1 or 2 and shall have preservative treatment.

2.1.7 Plywood Subflooring: Plywood shall conform to DOC PS 1; Grade C-D with exterior glue, Structural I, Grades 1 or 2, center - matched. Minimum span rating for subflooring shall be 24/16 for supports 400 mm (16 inches) on center.

2.2 ACCESSORIES AND NAILS: Markings shall identify both the strength grade and the manufacturer. Accessories and nails shall conform to the following:

2.2.1 Anchor Bolts: ASTM A 307, size as indicated, complete with nuts and washers.

2.2.2 Bolts: Lag, Toggle, and Miscellaneous Bolts and Screws: Type, size, and finish best suited for intended use. Finish options include zinc compounds, cadmium, and aluminum paint impregnated finishes.

2.2.3 Clip Angles: Steel, 4.8 mm (3/16 inch) (3/16 inch) thick, size best suited for intended use; or zinc-coated steel or iron commercial clips designed for connecting wood members.

2.2.4 Expansion Shields: Type and size best suited for intended use.

2.3 INSULATION: Thermal resistance of insulation shall be not less than the R-values shown. R-values shall be determined at 24 degrees C (75 degrees F) in accordance with ASTM C 518. Insulation shall contain the highest practicable percentage of recovered material which has been recovered or diverted from solid waste, but not including material reused in a manufacturing process. Where two materials have the same price and performance, the one containing the higher recovered material content shall be provided. Insulation shall be the standard product of a manufacturer and factory marked or identified with manufacturer's name or trademark and R-value. Identification shall be on individual pieces or individual packages. Materials containing more than one percent asbestos will not be allowed.

2.3.1 Batt or Blanket

2.3.1.1 Glass Fiber Batts and Rolls: Glass fiber batts and rolls shall conform to ASTM C 665, Type II kraft faced insulation, having a UL rating of 25. Width and length shall suit construction conditions.

2.3.3 Sill Sealer: Mineral wool, 25 mm (1 inch) thick and compressible to 0.8 mm, (1/32 inch,) width of sill, designed to perform as an air, dirt, and insect seal in conformance with ASTM C 665, Type I.

2.3.4 Rigid Insulation

2.3.4.1 Polystyrene Board: Polystyrene board shall be extruded and conform to ASTM C 578, Type IV.

2.3.4.2 Polyurethane or Polyisocyanurate Board: Polyurethane or polyisocyanurate board shall conform to ASTM C 1013 (having a minimum recovered material content of 9 percent by weight of core material in the polyurethane or polyisocyanurate portion). Unfaced preformed polyurethane shall conform to ASTM C 591. Faced polyisocyanurate shall conform to ASTM C 1289.

2.3.4.3 Glass Fiber or Insulation Board: Glass fiber or insulation board shall conform to FS HH-I-558, Form A, Class 1.

2.3.4.4 Mineral Fiber Block and Board: Mineral fiber block and board shall conform to ASTM C 612 or ASTM C 726.

2.3.4.5 Cellular Glass: Cellular glass shall conform to ASTM C 552.

PART 3 EXECUTION

3.1 INSTALLATION OF FRAMING

3.1.1 General: Members shall be closely fitted, accurately set to required lines and levels, and rigidly secured in place. Joists shall be set with crown edge up. When wood plates are placed on concrete, the plate shall be positioned and leveled with grout. When girders are set into masonry or concrete, a pocket shall be formed into the wall. The joist, beam, or girder shall then be placed into the pocket and leveled with a steel shim.

3.1.2 Structural Members: Members shall be adequately braced before erection. Members shall be aligned and all connections completed before removal of bracing. Bearing plates resting on concrete floors shall be anchored in place with expansion bolts, one near each end of each piece and at intermediate intervals of not more than 1200 mm (4 feet) between bolts. In lieu of expansion bolts, anchoring into concrete may be accomplished with powder-driven threaded studs of suitable type and size and spaced at 900 mm (3 feet) on center.

3.2 INSTALLATION OF PLYWOOD SHEATHING

3.2.1 Plywood and Structural-Use Panels: Sheathing shall be applied with edges 3 mm (1/8 inch) apart at side and end joints, and screwed to metal decking with flat head drive-screws (self-tapping) at 600 mm (24 inches) on center, maximum. Roof sheathing shall be applied with long dimension at right angles to decking, and end joints shall be staggered.

3.3 INSTALLATION OF SUBFLOORING

3.3.1 Plywood and Structural-Use Panel: Subflooring shall be applied with long dimension at right angles to the supports, with edges 3 mm (1/8 inch) apart at side and end joints, and drive-screwed at supported edges 150 mm (6 inches) on center and at intermediate supports 300 mm (12 inches) on center. Subflooring may be installed with adhesive conforming to APA V450 and screws spaced at 300 mm (12 inches) on center. Installation of subflooring with adhesives shall be in accordance with APA E30. Each panel shall have end joints made over supports and end joints staggered.

3.4 INSTALLATION OF MISCELLANEOUS WOOD MEMBERS

3.4.1 Blocking: Blocking shall be provided as necessary for application of siding, sheathing, subflooring, and other materials or building items. Blocking shall be cut to fit between framing members and rigidly nailed thereto.

3.4.2 Nailers and Nailing Strips: Nailers and nailing strips shall be provided as necessary for the attachment of finish materials. Nailers used in conjunction with roof deck installation shall be installed tight to the roof deck system. Beginning and ending nails shall not be more than 150 mm (6 inches) for nailer end.

3.4.3 Sill Plates: Sill plates shall be set level and square and anchor bolted at not more than 1800 mm (6 feet) on centers and not more than 300 mm (12 inches) from end of each piece. A minimum of two anchors shall be used for each piece.

3.5 INSTALLATION OF INSULATION: Insulation shall be installed after construction has advanced to a point that the installed insulation will not be damaged by remaining work. For thermal insulation the actual installed thickness shall provide the thermal resistance (R-values) shown. For acoustical insulation the installed thickness shall be as shown. Insulation shall be installed on the weather side of such items as electrical boxes and water lines. Unless otherwise specified, installation shall be in accordance with the manufacturer's recommendation.

-- End of Section --

INDEX

SECTION 06200

CARPENTRY

Paragraph		Page
1.1	REFERENCES	06100-1
1.2	SUBMITTALS	06100-1
1.3	DELIVERY AND STORAGE	06100-1
2.1	WOOD ITEMS	06100-1
2.2	NAILS	06100-2
2.3	FIRE EXTINGUISHER CABINET	06100-2
3.1	FACIAS AND SOFFIT PANELS	06100-2
3.2	WOODWORK ITEMS	06100-2
3.3	INSTALLATION OF FIRE EXTINGUISHER CABINET	06100-2

SECTION 06200

CARPENTRY

PART 1 GENERAL

1.1 REFERENCES: The publications listed below form a part of this specification to the extent referenced. The publications are referred to in the text by basic designation only.

FEDERAL SPECIFICATIONS (FS)

FS FF-N-105	(Rev B; Am 3; Int Am 4; Notice 1) Nails, Brads, Staples and Spikes: Wire, Cut and Wrought

1.2 SUBMITTALS: Government approval is required for submittals with a "GA" designation; submittals having an "FIO" designation are for information only. The following shall be submitted in accordance with Section 01300 SUBMITTAL PROCEDURES:

SD-01 Data

Facia and soffit panels: GA.

Manufacturer's printed data, showing texture, density, catalog cuts, and installation instructions.

SD-04 Drawings

Finish Carpentry; GA.

Drawings showing fabricated items and special mill and woodwork items. Drawings shall indicate materials and details of construction, methods of fastening, erection, and installation.

SD-14 Samples

Moldings; GA. Fascias and Soffit panels; GA.

Samples shall be of sufficient size to show patterns, color ranges, and types, as applicable, of the material proposed to be used.

1.3 DELIVERY AND STORAGE: Materials shall be delivered to the site in undamaged condition, stored off ground in fully covered, well-ventilated areas, and protected from extreme changes in temperature and humidity.

PART 2 PRODUCTS

2.1 WOOD ITEMS

2.1.1 Facia and Soffit Panels: Prefinished facia and soffit panels shall consist of an asbestos-free cement board glass fibre base sheet with a factory applied surface of polyester UV stable gel-coat. Factory applied finish shall be a minimum of 0.51 mm (20 mils) polyester. Color shall be selected from manufacturer's standard colors. Cement board base sheet shall be a minimum of 6 mm (1/4 inch) thick. Finished panels shall be dimensionally stable. Water absorption on the surfaced side shall not exceed 0.20 percent after 24 hours of submergence in water. Accessories shall be manufacturer's standard extruded matching color

aluminum moldings. Moldings shall be provided for meeting strips, end caps, or outside corners. Fasteners shall be noncorrosive, self-tapping screw type and finished to match the color of stone. Caulking compound shall be color compatible, low modulus silicone or urethane type.

2.1.2 Skylight: Skylight shall be pyramid shaped four-sided formed plastic dome unit, double glazed with extruded aluminum crub. Outer glazing shall be bronze acrylic; inner glazing shall be clear acrylic. Unit shall be assembled on medium bronze anodized curb frame which provides a thermal break, condensate captivation and capillary break. All corners shall be welded. Glazing shall meet or exceed minimum thickness specified by AAMA 1605.1. Pitch of skylight shall match roof pitch.

2.1.3 Wood Railing Cap: Wood railing caps shall be WIC Custom Grade birch, or oak suitable for transparent finish. Caps shall be sanded smooth, with the edges slightly eased. Attach to finish wall with countersunk flat head wood screws, plugged with matching dowel caps.

2.1.4 Woodwork Items

2.1.4.1 Chalkboards: Chalkboards shall have an aluminum frame and 6.4 mm (1/4 inch) thick writing surface of porcelain enamel laminated to plywood. Color shall be off white.

2.2 NAILS: Nails shall be the size and type best suited for the purpose and shall conform to FS FF-N-105. Nails shall be hot-dip galvanized or aluminum when used on exterior work. Screws for use where nailing is impractical shall be size best suited for purpose.

2.3 FIRE EXTINGUISHER CABINET: Fire extinguisher cabinets shall be semi-recessed baked enamels steel with flush door, lettering denoting ‘FIRE EXTINGUISHER”; in red. Cabinet shall have rolled edges and shall accommodate the following fire extinguisher.

2.3.1 Fire Extinguisher: Fire extinguisher shall be dry chemical type with U/L Rating of 2A:10BC.

PART 3 EXECUTION

3.1 FASCIAS AND SOFFIT PANELS: Exposed surfaces and square edges shall be machine sanded, caulked, and constructed to exclude water. Fascias and soffit panels shall be cut to appropriate size so that the joints occur at module lines shown on drawings. Provide “h” molds and ajustable outside corner molds as shown. aligh moldings accurately and securely neatly to structure. Moldings shall match panel color and shall be prefinished. Panels shall be fastened with flat head self-tapping screws, countersunk flush with surface of panels. Screws shall be neatly aligned in straight rows and shall be spaced at intevals not exceed 16”x24”. Touch up scratches or other imperfections with factory-supplied matching color.

3.2 WOODWORK ITEMS

3.2.1 White Marker Boards: Items shall be installed in accordance with the manufacturer's recommendation. Install neatly and accurately, properly algined with adjacent items.

3.2.2 Skylight: Install skylight accurately and securely as shown on drawings. Set skylight over curb after roof membrane has been placed. Secure skylight to wood framing with one-way screws.

3.2.3 Wood Railing Caps: Wood railing caps shall be placed accurately and securly on top of steel stud fin wall. Mitre joints accurately.

3.2.4 Shelving: Shelving shall be anchored to supporting construction. Unless otherwise indicated, shelves shall be supported by wall-supported brackets not more than 24 inches on center or as required to limit deflection to 1/4 inch between supports with a load of 35 lb per lineal foot. Adjustable shelf

hardware shall be steel standards, channel shaped, with 1 inch adjustment slots and brackets designed for attachment to standards.

3.2.5 Clothes Hanger Rods: Rods shall be provided where indicated and in all closets having hook strips. Rods shall be zinc-coated steel pipe 1 inch in diameter. Rods shall be set parallel with the front edges of the shelving, and shall be supported at each end by suitable sockets, and by intermediate brackets spaced at not more than 4 foot centers.

3.2.6 Workbenches: Items shall be anchored in place as indicated.

3.3 INSTALLATION OF FIRE EXTINGUISHER CABINETS: Install cabinets neatly, accurately and securely in locations shown. Cabinets shall be mounted tight to wall surfaces.

-- End of Section --

INDEX

SECTION 07320

CLAY TILE ROOFING

Paragraph		Page
1.1	REFERENCES	07320-1
1.2	SUBMITTALS	07320-2
1.3	QUALIFICATIONS	07320-2
1.4	DELIVERY, STORAGE AND HANDLING	07320-2
1.5	PROJECT/SITE CONDITIONS	07320-2
1.6	WARRANTY	07320-3
2.1	MATERIALS	07320-3
3.1	PROTECTION OF ROOF SURFACES	07320-4
3.2	PREPARATION OF SURFACES	07320-4
3.3	ELASTOMERIC MEMBRANCE UNDERLAYMENT	07320-4
3.4	METAL FLASHING	07320-4
3.5	CLAY ROOFING TILE (GENERAL)	07320-4
3.6	TWO-PIECE BARREL TILE APPLICATION	07320-5

SECTION 07320

CLAY TILE ROOFING

PART 1 GENERAL

1.1 REFERENCES: The publications listed below form a part of this specification to the extent referenced. The publications are referred to in the text by basic designation only.

AMERICAN SOCIETY FOR TESTING AND MATERIALS (ASTM)

ASTM B 370	(1992) Copper Sheet and Strip for Building Construction
ASTM C 1167	(1993a) Clay Roof Tiles
ASTM C 1184	(1991) Structural Silicone-Sealants
ASTM D 146	(1990) Sampling and Testing Bitumen-Saturated Felts and Woven Fabrics for Roofing and Waterproofing
ASTM D 412	(1992) Vulcanized Rubber and Thermoplastic Rubbers and Thermoplastic Elastomers - Tension
ASTM D 2822	(1991) Asphalt Roof Cement

NATIONAL ROOFING CONTRACTORS ASSOCIATION (NRCA)

NRCA-02	(1992) NRCA Roofing and Waterproofing Manual

SHEET METAL & AIR CONDITIONING CONTRACTORS' NATIONAL ASSOCIATION (SMACNA)

SMACNA-02	(1993) Architectural Sheet Metal Manual

1.2 SUBMITTALS: Government approval is required for submittals with a "GA" designation; submittals having an "FIO" designation are for information only. The following shall be submitted in accordance with Section 01300 SUBMITTAL PROCEDURES:

SD-01 Data

Clay Tile Roof System; GA.

Manufacturer's catalog data and installation instructions.

SD-04 Drawings

Clay Tile Roof System; GA.

Drawings showing clay tile installation and appearance details, flashing details, and fastening details for the tiles.

SD-08 Statements

Qualifications; GA.
Documentation showing qualifications of personnel proposed to perform the roofing work, and a listing identifying prior installations completed by the Contractor.

SD-13 Certificates

Certificates of Compliance; GA.

Certificates of compliance attesting that the materials meet specification requirements.

SD-14 Samples

Clay Roofing Tiles; GA.

One representative tile of each type.

Sealants; GA.

237 mL (8 ounces) of each type.

Underlayment Sheet; GA.

300 by 300 mm (1 by 1 foot) section of each type.

Fasteners; GA.

Representative samples of each fastener with identifying tags.

1.3 QUALIFICATIONS: The Contractor shall provide qualified workers, trained and experienced in installing clay tile roofing systems of this configuration, and shall submit documentation of 5 consecutive years of work of this type. The Contractor shall be familiar with and shall perform work in accordance with SMACNA-02 and NRCA-02. A list of installations shall be provided which identifies when, where, and for whom the installations were made.

1.4 DELIVERY, STORAGE AND HANDLING: Materials shall be delivered in manufacturer's unopened bundles and containers with the manufacturer's brand and name marked clearly thereon. Tiles shall be stored in accordance with manufacturer's printed instructions. Roll goods shall be stored on end in an upright position. Immediately before laying, roofing felt shall be stored for 24 hours in an area maintained at a temperature not lower than 10 degrees C. (50 degrees F.)

1.5 PROJECT/SITE CONDITIONS:

1.5.1 Environmental Requirements: Clay tile roofing work shall proceed when existing and forecasted weather conditions permit work to be performed in accordance with manufacturer's recommendations and warranty requirements.

1.5.2 Material Storage: Materials shall not be stored on roof decks in such a manner as to overstress and/or damage the deck and supporting structure. Placing of loads at midspans of framing shall be avoided. Superimposed loads shall be well distributed.

1.5.3 Units of Work: Units of work shall be established, including preparation of existing surfaces and application of underlayment and nailers, and related temporary and/or permanent flashing so that it can be completed prior to the end of each working day.

1.5.4 Temporary Protection Materials: Materials shall be provided and maintained on the site at all times for temporary roofing, flashing, and other protection when delays and/or changed weather conditions do not permit completion of each unit of work prior to the end of each working day. Materials which have been used for temporary roofing, flashing and other protection shall be removed and discarded.

1.6 WARRANTY: A warranty shall be furnished against defects in material and workmanship of clay tile roof assembly, including related metal flashing for a period of 10 years from date of final acceptance of the work.

PART 2 PRODUCTS

2.1 MATERIALS

2.1.1 Clay Roofing Tile: Clay roofing tile shall be minimum Grade 1 tile conforming to ASTM C 1167. Tile shall be Italian pan with barrell cover. Tile shall be unglazed.

2.1.1.1 Colors: Clay tile color shall be in accordance with Section 09915 COLOR SCHEDULE.

2.1.1.2 Fittings: Clay tile fittings shall be of the following types as required by manufacturer's instructions: eave - eave closure.

2.1.2 Membrane: An underlayment membrane shall be furnished on surfaces to be covered with tile. Membrane shall consist of high strength composite self-adhering membrane.

2.1.2.1 Elastomeric Membrane Underlayment: Elastomeric membrane shall be a cold applied composite self-adhering membrane, minimum 40 mil thick, high strength polyethylene film with slip resistant embossing, coated on one side with a thick layer of adhesive-consistency rubberized asphalt, interwound with a disposable silicone coated release sheet. The tensile strength and elongation values shall be not less than 1724 kPa (250 psi) when tested in accordance with ASTM D 412 and pliability shall be unaffected when tested in accordance with ASTM D 146.

2.1.3 Fasteners

2.1.3.1 Nails: Nails shall be stainless steel, Number 11 gauge nails, minimum 8 mm (5/16 inch) head. Nails shall be of sufficient length to adequately penetrate the roof sheathing.

2.1.3.2 Miscellaneous Fasteners: Miscellaneous fasteners may include but are not limited to: tile nails, twisted wire (tile-tie), and flashing cleats. Fasteners shall be made of solid copper.

2.1.4 Flashing: Flashing shall be 0.57 kg (20-ounce), light cold-rolled temper (H00) copper conforming to ASTM B 370. Like metals shall be used on all components of fastening systems and flashing in order to avoid galvanic action. Flashing shall be in accordance with the requirements as specified in Section 07600 SHEET METALWORK, GENERAL.

2.1.5 Plastic Cement: Plastic cement for gable rakes, hip rolls, ridges, stringers and other conditions shall be non-running, heavy body plastic cement composed of ingredients complying with ASTM D 2822.

2.1.6 Sealant: Sealant, when used in lieu of plastic cement, shall be silicone in accordance with ASTM C 1184.

2.1.7 Mortar: Mortar for filling the openings of cut hip tiles shall consist of 1 part portland cement to 3 parts damp plaster sand, and shall be colored to the nearest possible match with the color of the tile.

2.1.8 Wood Strips: Wood strips for nailers shall be of foundation grade redwood or preservative treated Douglas fir. Sizes and lengths shall be provided per tile manufacturer's installation details.

PART 3 EXECUTION

3.1 PROTECTION OF ROOF SURFACES: Equipment (such as padded ridge ladders) and techniques shall be used which prevent damage to roof as a result of foot or material traffic. Contractor shall be responsible for controlling breakage of new tile. The progression of work shall be laid out and presented to the Contracting Officer to prevent other trades from working on or above completed roofing. Personnel who are working on the roof shall have proper shoes which will not damage tiles and shoe soles shall be made of a material which will aid in preventing falls.

3.2 PREPARATION OF SURFACES: Roof deck surfaces shall be smooth, clean, firm, dry, and free from loose boards, large cracks, and projecting ends that might damage the roofing. Foreign particles shall be cleaned from all areas to ensure proper seating and to prevent water damming. Prior to installation of tile, vents and other projections through roofs shall be properly flashed and secured in position, and projecting nails shall be driven firmly home.

3.3 ELASTOMERIC MEMBRANE UNDERLAYMENT

3.3.1 Surface Preparation: Dust, dirt, loose nails or other protrusions shall be removed. Priming is not required.

3.3.2 Temperature: Membrane shall be applied only in fair weather when air and surface temperatures are above 5 degrees C. (40 degrees F.)

3.3.3 Membrane Application: Membrane shall be applied according to manufacturer's instructions. Membrane shall be adhered directly to roof deck Membrane shall be cut into 3 to 4.5 meter (10 to 15 foot) lengths and shall be re-rolled. The release paper shall be peeled back 300 to 600 mm (1 to 2 feet) and the membrane shall be aligned on the lower edge of the roof and the first 300 to 600 mm) (1 to 2 feet) shall be placed. The release paper under the membrane shall be pulled and peeled from the membrane. The membrane shall be pressed in place. Lower edges shall be rolled firmly with a wallpaper or hand roller. Ends and edges shall be overlapped a minimum of 150 mm. (6 inches.) Membrane shall not be folded onto an exposed face of the roof edge.

3.3.4 Ridge Application: The membrane shall be cut into 1.2 to 1.8 meter (4 to 6 foot) lengths. The release paper shall be peeled and the sheet centered over the ridge, draped and pressed in place working from the center of the ridge outward in each direction. Sheets shall overlap a minimum of 150 mm. (6 inches.)

3.3.5 Protection: Elastomeric membrane underlayment shall not be left permanently exposed to sunlight. Membrane shall be covered with exposed roofing materials as soon as possible. Membrane damaged due to exposure to sunlight shall be patched prior to the application of final roof covering.

3.4 METAL FLASHING: Metal flashing shall be as shown at intersections of vertical or projecting surfaces through the roof or against which the roof abuts, such as the skylight. Flashing installation shall be in accordance with Section 07600 SHEET METALWORK, GENERAL.

3.5 CLAY ROOFING TILE (GENERAL)

3.5.1 Roof Decks and Fasteners: Tile shall be fastened to roof deck materials as follows:

DECK	FASTENER
Plywood	Slater's ring shank nail. Point shall just penetrate through underside of deck.

Note: All fastening and flashing metals shall be of like material in order to avoid galvanic action.

3.5.2 Chalk Lines: Horizontal and vertical guide lines shall be chalked on the membrane to assure proper appearance. The chalk lines shall be spaced by measuring the delivered tiles for average length and width exposures. An exposure length of 6 mm (1/4 inch) beyond the average shall not be exceeded.

3.6 TWO-PIECE BARREL TILE APPLICATION

3.6.1 Wood Strips: Wood stringers, 37 mm (1-1/2 inch) wide and of proper height, shall be applied on hips to carry hip roll.

3.6.2 Tile Application

a. Eave closures shall be installed first. Eave strips shall be space 1/4” apart.

b. Tiles shall be laid to straight lines parallel to ground level, and shall be lapped 75 mm (3 inches) vertically.

c. Each tile shall be fastened with 1, 2, or 3 nails as required in each tile or fitting. Nails shall not be driven so far as to produce a strain on the tile, nor left proud to stress overlapping tile.

d. Tiles overlapping sheet metalwork shall have the nails so placed as to avoid puncturing the sheet metal. Tiles overlapping sheet metal shall be fastened with copper wire and plastic cement.

e. When tile is applied tight method, short course covers shall be installed over regular pans at eave and regular covers over short course pans at ridge. Top edge of covers shall abut bottom edge of pans in the succeeding course throughout the roof.

f. Ridges shall be cemented and fastened with 63 mm (2-1/2 inch) copper nails in laps and where they rest on roof tiles.

g. Where tiles join hip stringers they shall be made waterproof with flashing cement.

h. When hip starter and closed ridge end fittings have not been specified, the voids at ends of hips and ridges shall be filled with mortar colored to nearest match of tile color.

i. Tile in contact with cement mortar shall be immersed in water for at least 2 minutes before laying.

j. When ridge angles and hip/ridge terminals have not been specified, they shall be mitered on job, nailed or wired, and set in plastic cement.

-- End of Section --

INDEX

SECTION 07650

COPPER SHEET METAL FLASHING

Paragraph		Page
1.1	REFERENCES	07650-1
1.2	GENERAL REQUIREMENTS	07650-1
1.3	SUBMITTALS	07650-1
1.4	DELIVERY, STORAGE AND HANDLING	07650-2
3.1	SOLDERING AND SEAMING	07650-2
3.2	EXPANSION JOINTS	07650-2
3.3	FLASHING	07650-2
3.4	FASCIA	07650-3
3.5	RAIN DIVERTER	07650-3

SECTION 07650

COPPER SHEET METAL FLASHING

PART 1 GENERAL

1.1 REFERENCES: The publications listed below form a part of this specification to the extent referenced. The publications are referred to in the text by basic designation only.

AMERICAN SOCIETY FOR TESTING AND MATERIALS (ASTM)

ASTM B 152	(1993a) Copper Sheet, Strip, Plate, and Rolled Bar
ASTM B 370	(1992) Copper Sheet and Strip for Building Construction
ASTM D 2822	(1991) Asphalt Roof Cement

COMMERCIAL ITEM DESCRIPTIONS (CID)

CID A-A-51145	(Rev C) Flux, Soldering, Non-Electronic, Paste and Liquid

FEDERAL SPECIFICATIONS (FS)

FS FF-N-105	(Rev B; Am 3; Int Am 4; Notice 1) Nails, Brads, Staples and Spikes: Wire, Cut and Wrought
FS QQ-S-571	(Rev F) Solder, Electronic (96 to 485 Degrees C) (Metric)
FS SS-C-153	(Rev C) Cement, Bituminous, Plastic

1.2 GENERAL REQUIREMENTS: Sheet metalwork shall be accomplished to form weathertight construction. Work shall be installed without waves, warps, buckles, fastening stresses or distortion and shall allow for expansion and contraction. Cutting, fitting, drilling, and other operations in connection with sheet metal required to accommodate the work of other trades shall be performed by sheet metal mechanics. Exposed edges shall be hemmed. Bottom edges of exposed vertical surfaces shall be angled to form drips. Flashing at the end of a run shall be formed into a three dimensional configuration to direct water to the outside of the system. Weights and thicknesses of copper flashing shall be as specified in TABLE 1. Joints shall be installed as specified in TABLE 2. Accessories and other items essential to complete the sheet metal installation, though not specifically indicated or specified, shall be provided. Installation of sheet metal items used in conjunction with roofing shall be coordinated with roofing work to permit continuous roofing operations. Sheet metalwork pertaining to heating, ventilating, and air conditioning is specified in other sections.

1.3 SUBMITTALS: Government approval is required for submittals with a "GA" designation; submittals having an "FIO" designation are for information only. The following shall be submitted in accordance with Section 01300 SUBMITTAL PROCEDURES:

SD-04 Drawings

Sheet Metal; GA.

Drawings showing weights, gauges, or thickness of sheet metal; type of material; joining, expansion-joint spacing, and fabrication details; and installation procedures. Materials shall not be delivered to the site until after the approved detail drawings have been returned to the Contractor.

SD-14 Samples

Materials;GA.

Samples of materials proposed for use, upon request.

1.4 DELIVERY, STORAGE, AND HANDLING: Materials shall be adequately packaged and protected during shipment and shall be inspected for damage, dampness, and wet-storage stains upon delivery to the jobsite. Sheet metal items shall be carefully handled to avoid damage. Materials shall be stored in dry, weathertight, ventilated areas until installation.

PART 2 PRODUCTS

2.1 MATERIALS: Materials shall conform to the requirements specified below, and those given in TABLE 1. All materials exposed to weather shall be copper.

2.1.1 Bituminous Cement: ASTM D 2822, Type I; FS SS-C-153, Type I.

2.1.2 Fasteners: Materials shall conform to TABLE 1. Nails shall conform to FS FF-N-105. Nails and rivets shall be copper. Fasteners shall be the best type for the application.

2.1.3 Flux: CID A-A-51145, Type I.

2.1.4 Sheet Metal: ASTM B 152,ASTM B 370, Light cold-rolled temper (H00) copper.

2.1.5 Solder: FS QQ-S-571, Alloy 50B, for use with copper.

PART 3 EXECUTION

3.1 SOLDERING AND SEAMING

3.1.1 Soldering: Edges of sheet metals shall be pretinned before soldering is begun. Soldering shall be done slowly with well heated soldering irons so as to thoroughly heat the seams and completely sweat the solder through the full width of the seam. Soldering shall follow immediately after application of the flux. Upon completion of soldering, the acid flux residue shall be thoroughly cleaned from the sheet metal with a solution of washing soda in water and rinsed with clean water.

3.2 EXPANSION JOINTS: Expansion joints shall be provided at 12.0 meter (40 foot) intervals, except that where the distance between the last expansion joint and the end of the continuous run is more than half the required interval spacing, an additional joint shall be provided. Joints shall be evenly spaced.

3.3 FLASHINGS

3.3.1 General: Corner units shall have mitered joints, shall be installed with 75 mm (3 inch) lap joint over flashings on each side. Exposed and unfastened flashings shall have the edge of the strip turned under 13 mm. (1/2 inch.).

3.3.2 Base Flashings

(a) Base flashings shall extend over the uppermost row of tile at least 100 mm (4 inches) over the tile immediately below the metal.

(b) The vertical leg of the metal shall be turned up as indicated, and nailed to the top surface of the wood curb.

3.4 FASCIA: Sheets shall be fabricated without longitudinal joints. Provision for expansion shall be provided at joints. Joints shall have 12" back-up plate as detailed. Back-up plate and facia shall be set in mastic. Factory fabricated internal and external corner units with mitered joints shall be provided. Roof flange and splice plate of the fascia shall extend out on the roof not less than 100 mm, (4 inches,) and shall be set in bituminous cement under the roofing membrane. Roof flange shall be secured with nails spaced not greater than 75 mm (3 inches) on centers located within 25 mm (1 inch) of the outer edge of the flange. The fascia section shall not be face nailed. The facia shall be hemmed 13 mm (1/2 inch) at lower edge.

3.5 RAIN DIVERTER: Rain diverters shall be formed to the profile shown and shall extend across doorways as shown on drawings.

TABLE 1 - COPPER SHEET METAL WEIGHTS AND THICKNESSES

Item Description	Copper, ounce per square foot
Flashings:	
Base	20
Fascia	16
Rain Diverters	16
Fascia Backing Plate	16

-- End of Section --

INDEX

SECTION 07920

JOINT SEALING

Paragraph		Page
1.1	REFERENCE	07920-1
1.2	SUBMITTALS	07920-1
1.3	ENVIRONMENTAL REQUIREMENTS	07920-1
1.4	DELIVERY AND STORAGE	07920-1
2.1	BACKING	07920-2
2.2	BOND-BREAKER	07920-2
2.3	PRIMER	07920-2
2.4	LATEX SEALANT	07920-2
2.5	ELASTOMERIC SEALANTS	07920-2
2.6	ACOUSTICAL SEALANT	07920-2
2.7	BUTYL SEALANT	07920-2
2.8	SOLVENTS AND CLEANING AGENTS	07920-2
3.1	GENERAL	07920-2
3.2	APPLICATION	07920-3
3.3	CLEANING	07920-3

SECTION 07920

JOINT SEALING

PART 1 GENERAL

1.1 REFERENCES: The publications listed below form a part of this specification to the extent referenced. The publications are referred to in the text by basic designation only.

AMERICAN SOCIETY FOR TESTING AND MATERIALS (ASTM)

ASTM C 509	(1994) Elastomeric Cellular Preformed Gasket and Sealing Material
ASTM C 570	(1994) Oil- and Resin-Base Caulking Compound for Building Construction
ASTM C 734	(1993) Low-Temperature Flexibility of Latex Sealants After Artificial Weathering
ASTM C 834	(1991) Latex Sealants
ASTM C 920	(1987) Elastomeric Joint Sealants
ASTM D 217	(1994) Cone Penetration of Lubricating Grease
ASTM E 84	(1994a) Surface Burning Characteristics of Building Materials

1.2 SUBMITTALS: Government approval is required for submittals with a "GA" designation; submittals having an "FIO" designation are for information only. The following shall be submitted in accordance with Section 01300 SUBMITTAL PROCEDURES:

SD-01 Data

Backing; GA.

Bond-Breaker; GA.

Sealant; GA.

Manufacturer's descriptive data including storage requirements, shelf life, curing time, instructions for mixing and application, and primer data (if required). A copy of the Material Safety Data Sheet shall be provided for each solvent, primer or sealant material.

SD-13 Certificates

Sealant; FIO.

Certificates of compliance stating that the materials conform to the specified requirements.

1.3 ENVIRONMENTAL REQUIREMENTS: The ambient temperature shall be within the limits of 4 to 32 degrees C (40 to 90 degrees F) when the sealants are applied.

1.4 DELIVERY AND STORAGE: Materials shall be delivered to the job in the manufacturer's original unopened containers. The container label or accompanying data sheet shall include the following

information as applicable: manufacturer, name of material, formula or specification number, lot number, color, date of manufacture, mixing instructions, shelf life, and curing time at the standard conditions for laboratory tests. Materials shall be handled and stored to prevent inclusion of foreign materials. Materials shall be stored at temperatures between 4 and 32 degrees C (40 and 90 degrees F) unless otherwise specified by the manufacturer.

PART 2 PRODUCTS

2.1 BACKING: Backing shall be 25 to 33 percent oversize for closed cell and 40 to 50 percent oversize for open cell material, unless otherwise indicated.

2.1.1 Synthetic Rubber Backing: Synthetic rubber backing shall be ASTM C 509, Option I, Type II preformed rods or tubes.

2.2 BOND-BREAKER: Bond-breaker shall be as recommended by the sealant manufacturer to prevent adhesion of the sealant to backing or to bottom of the joint.

2.3 PRIMER: Primer shall be non-staining type as recommended by sealant manufacturer for the application.

2.4 LATEX SEALANT: Latex Sealant, A shall be ASTM C 834.

2.5 ELASTOMERIC SEALANTS: Elastomeric sealants shall conform to ASTM C 920 and the following:

a. Polyurethane Sealant B: Polyurethane sealant, Grade NS, Class 25, Use G and A.

b. Silicone Sealant C: Silicone sealant, Type S, Grade NS, Class 25, Use NT.

2.6 ACOUSTICAL SEALANT: Rubber or polymer-based acoustical sealant D shall have a flame spread of 25 or less and a smoke developed rating of 50 or less when tested in accordance with ASTM E 84. Acoustical sealant shall have a consistency of 250 to 310 when tested in accordance with ASTM D 217, and shall remain flexible and adhesive after 500 hours of accelerated weathering as specified in ASTM C 734, and shall be non-staining.

2.7 BUTYL SEALANT:

2.7.1 Tape Sealant: Tape sealant, cross-section dimensions shall be 1/16” x 1/2”.

2.8 SOLVENTS AND CLEANING AGENTS: Solvents, cleaning agents, and accessory materials shall be provided as recommended by the manufacturer.

PART 3 EXECUTION

3.1 GENERAL

3.1.1 Surface Preparation: The surfaces of joints to be sealed shall be dry. Oil, grease, dirt, chalk, particles of mortar, dust, loose rust, loose mill scale, and other foreign substances shall be removed from surfaces of joints to be in contact with the sealant. Oil and grease shall be removed with solvent and surfaces shall be wiped dry with clean cloths.

3.1.2 Concrete and Masonry Surfaces: Where surfaces have been treated with curing compounds, oil, or other such materials, the materials shall be removed by sandblasting or wire brushing. Laitance, efflorescence and loose mortar shall be removed from the joint cavity.

3.1.3 Steel Surfaces: Steel surfaces to be in contact with sealant shall be sandblasted or, if sandblasting would not be practical or would damage adjacent finish work, the metal shall be scraped and wire brushed to remove loose mill scale. Protective coatings on steel surfaces shall be removed by sandblasting or by a solvent that leaves no residue.

3.1.4 Aluminum Surfaces: Aluminum surfaces to be in contact with sealants shall be cleaned of temporary protective coatings. When masking tape is used for a protective cover, the tape and any residual adhesive shall be removed just prior to applying the sealant. Solvents used to remove protective coating shall be as recommended by the manufacturer of the aluminum work and shall be non-staining.

3.2 APPLICATION

3.2.1 Masking Tape: Masking tape may be placed on the finish surface on one or both sides of a joint cavity to protect adjacent finish surfaces from primer or sealant smears. Masking tape shall be removed within 10 minutes after joint has been filled and tooled.

3.2.2 Backing: Backing shall be installed to provide the indicated sealant depth. The installation tool shall be shaped to avoid puncturing the backing.

3.2.3 Bond-Breaker: Bond-breaker shall be applied to fully cover the bottom of the joint without contaminating the sides where sealant adhesion is required.

3.2.4 Primer: Primer shall be used on concrete masonry units, or other porous surfaces in accordance with instructions furnished with the sealant. Primer shall be applied to the joint surfaces to be sealed. Surfaces adjacent to joints shall not be primed.

3.2.5 Sealant: Sealant shall be used before expiration of shelf life. Multi-component sealants shall be mixed according to manufacturer's printed instructions. Sealant in guns shall be applied with a nozzle of proper size to fit the width of joint. Joints shall be sealed as detailed in the drawings. Sealant shall be forced into joints with sufficient pressure to expel air and fill the groove solidly. Sealant shall be installed to the indicated depth without displacing the backing. Unless otherwise indicated, specified, or recommended by the manufacturer, the installed sealant shall be tooled so that the surface is uniformly smooth and free of wrinkles and to assure full adhesion to the sides of the joint. Sealants shall be installed free of air pockets, foreign embedded matter, ridges and sags. Sealer shall be applied over the sealant when and as specified by the sealant manufacturer.

3.3 CLEANING: The surfaces adjoining the sealed joints shall be cleaned of smears and other soiling resulting from the sealant application as work progresses.

-- End of Section --

INDEX

SECTION 08110

STEEL DOORS AND FRAMES

Paragraph		Page
1.1	REFERENCES	08110-1
1.2	SUBMITTALS	08110-1
1.3	DELIVERY AND STORAGE	08110-2
1.4	WARRANTY	08110-2
2.1	DOORS AND FRAMES	08110-2
2.2	SECURITY DOORS	08110-2
2.3	LOUVERS	08110-2
2.4	FACTORY FINISH	08110-2
3.1	INSTALLATION	08110-3
3.2	FIELD PAINTED FINISH	08110-3

SECTION 08110

STEEL DOORS AND FRAMES

PART 1 GENERAL

1.1 REFERENCES: The publications listed below form a part of this specification to the extent referenced. The publications are referred to in the text by basic designation only.

DOOR AND HARDWARE INSTITUTE (DHI)

DHI-A115.IG	(1994) Installation Guide for Doors and Hardware

NATIONAL ASSOCIATION OF ARCHITECTURAL METAL MANUFACTURERS (NAAMM)

NAAMM HMMA 862	(1987) Hollow Metal Manual; Section: Guide Specifications for Commercial Security Hollow Metal Doors and Frames

STEEL DOOR INSTITUTE (SDOI)

SDOI SDI-100	(1991) Standard Steel Doors and Frames
SDOI SDI-106	(1991) Standard Door Type Nomenclature
SDOI SDI-107	(1984) Hardware on Steel Doors (Reinforcement - Application)

1.2 SUBMITTALS: Government approval is required for submittals with a "GA" designation; submittals having an "FIO" designation are for information only. The following shall be submitted in accordance with Section 01300 SUBMITTAL

PROCEDURES:

SD-04 Drawings

Steel Doors and Frames; GA.

Drawings using standard door type nomenclature in accordance with SDOI SDI-106 indicating the location of each door and frame, elevation of each model of door and frame, details of construction, method of assembling sections, location and extent of hardware reinforcement, hardware locations, type and location of anchors for frames, and thicknesses of metal. Drawings shall include catalog cuts or descriptive data for the doors, frames, and weatherstripping including air infiltration data and manufacturers printed instructions.

SD-09 Reports

SD-13 Certificates

Security Doors; GA.

a. Certification of Security Door Rating: Certification or test report for security rating doors shall show compliance with the specified requirements. The certification, or test report, shall list the parameters and the type of hardware and perimeter seals used to achieve the rating.

SD-14 Samples

Steel Doors and Frames; GA.

Manufacturer's standard color samples of factory applied finishes.

1.3 DELIVERY AND STORAGE: During shipment, welded unit type frames shall be strapped together in pairs with heads at opposite ends or shall be provided with temporary steel spreaders at the bottom of each frame. Materials shall be delivered to the site in undamaged condition, and stored out of contact with the ground and under a weathertight covering permitting air circulation. Doors and assembled frames shall be stored in an upright position in accordance with DHI-A115.IG. Abraded, scarred, or rusty areas shall be cleaned and touched up with matching finishes.

1.4 WARRANTY: Manufacturer's standard performance guarantees or warranties that extend beyond a 1 year period shall be provided.

PART 2 PRODUCTS

2.1 DOORS AND FRAMES: Doors and frames shall be factory fabricated in accordance with SDOI SDI-100 and the additional requirements specified herein. Door grade shall be heavy duty (Grade II) unless otherwise indicated on the door and door frame schedules. Exterior doors and frames shall be designation G60 galvanized. Indicated interior doors frames shall be designation G60 galvanized. Doors and frames shall be prepared to receive hardware conforming to the templates and information provided under Section 08700 BUILDERS' HARDWARE. Doors and frames shall be reinforced, drilled, and tapped to receive mortised hinges, locks, latches, and flush bolts as required. Doors and frames shall be reinforced for surface applied hardware. Frames shall be welded type. Door frames shall be furnished with a minimum of three jamb anchors and one floor anchor per jamb. Anchors shall be not less than 1.2 mm (18 gauge) steel or 4.5 mm (7 gauge) diameter wire. For wall conditions that do not allow the use of a floor anchor, an additional jamb anchor shall be provided. Rubber silencers shall be furnished for installation into factory predrilled holes in door frames; adhesively applied silencers are not acceptable. Where frames are installed in masonry walls, plaster guards shall be provided on door frames at hinges and strikes. Reinforcing of door assemblies for closers and other required hardware shall be in accordance with SDOI SDI-100 and the conditions of the fire door assembly listing when applicable. Exterior doors shall have top edges closed flush and sealed against water penetration.

2.2 SECURITY DOORS: Security type doors and frames shall be factory fabricated in accordance with NAAMM HMMA 862 and the additional requirements specified herein. Doors and frames shall be 1.7 mm construction. Doors shall have 1.7 mm (14 gauge) steel plate on both sides, and be internally reinforced vertically with continuous 1.0 mm (20 gauge) steel stiffeners spaced 150 mm (6 inches) on center maximum. Doors shall be fully welded seamless construction with no visible seams or joints on their faces or vertical edges. Door thickness shall be 44.5 mm (1-3/4 inches). Doors with cellular plastic cores shall have a minimum oxygen index rating of 22 percent when tested in accordance with ASTM D 2863. Door frames shall be all welded type, with double rabbet jamb profile. Frame corners shall be machine-mitered, full (continuously) welded. All exposed welds shall be ground and finished smooth. Provide hinge and lock reinforcement for grille door as shown.

2.3 LOUVERS: Where indicated, doors shall be provided with full louvers. Louvers shall be sightproof type inserted into the door. Inserted louvers shall be stationary. Louvers shall be nonremovable from the outside of exterior doors. Insect screens shall be a removable type with 18 by 16 mesh aluminum or bronze cloth. Full louver doors shall be in accordance with SDOI SDI-100, Grade III, Model 3.

2.4 FACTORY FINISH: Doors frames shall be phosphatized and primed with standard factory primer system. Color shall be in accordance with Section 09915 COLOR SCHEDULE.

PART 3 EXECUTION

3.1 INSTALLATION: Installation shall be in accordance with DHI-A115.IG. Preparation for surface applied hardware shall be in accordance with SDOI SDI-107. Rubber silencers shall be installed in door frames after finish painting has been completed; adhesively applied silencers are not acceptable. Weatherstripping shall be installed at exterior door openings to provide a weathertight installation.

3.1.1 Security Doors: Door frames shall be rigidly anchored in place and provided with antispread space filler reinforcements to prevent disengagement of the lock bolt by prying or jacking of the frame. Jambs shall be filled solid with concrete grout.

3.2 FIELD PAINTED FINISH: Steel doors and frames shall be field painted in accordance with Section 09900 PAINTING, GENERAL. Weatherstrips shall be protected from paint. Finish shall be free of scratches or other blemishes. Color shall be in accordance with Section 09915 COLOR SCHEDULE.

-- End of Section --

INDEX

SECTION 08120

ALUMINUM DOORS AND FRAMES

Paragraph		Page
1.1	REFERENCES	08120-1
1.2	SYSTEM DESCRIPTION	08120-1
1.3	PERFORMANCE REQUIREMENTS	08120-1
1.4	SUBMITTALS	08120-2
1.5	DELIVERY AND STORAGE	08120-2
1.6	WARRANTY	08120-2
2.1	ALUMINUM DOORS AND FRAMES	08120-2
2.2	FABRICATION OF ALUMINUM FRAMES	08120-3
2.3	FABRICATION OF ALUMINUM DOORS	08120-3
3.1	INSTALLATION OF DOORS, FRAMES AND ACCESSORIES	08120-4

SECTION 08120

ALUMINUM DOORS AND FRAMES

PART 1 GENERAL

1.1 REFERENCES: The publications listed below form a part of this specification to the extent referenced. The publications are referred to in the text by basic designation only.

ALUMINUM ASSOCIATION (AA)

AA DAF-45	(1980) Designation System for Aluminum Finishes

AMERICAN SOCIETY FOR TESTING AND MATERIALS (ASTM)

ASTM B 209	(1992a) Aluminum and Aluminum-Alloy Sheet and Plate
ASTM B 221	(1992a) Aluminum and Aluminum-Alloy Extruded Bars, Rods, Wire, Shapes, and Tubes
ASTM E 283	(1991) Determining the Rate of Air Leakage Through Exterior Windows, Curtain Walls, and Doors Under Specified Pressure Differences Across the Specimen
ASTM E 330	(1990) Structural Performance of Exterior Windows, Curtain Walls, and Doors by Uniform Static Air Pressure Difference

1.2 SYSTEM DESCRIPTION: Swing-type aluminum doors and frames, of size and design shown on the drawings, shall be provided at the locations indicated. Doors shall be furnished complete with frames, subframes, adjoining sidelights, adjoining window wall, trim, and other accessories indicated and specified.

1.3 PERFORMANCE REQUIREMENTS

1.3.1 Vertical Rail Rotational Performance: Full-glazed doors, except doors with top and bottom rails fastened together with tensioned tie rods, shall pass the following test:

The test section shall consist of an assembly of the top corner of the door. The side-rail section shall be 609.6 mm (24 inches) long and the top-rail section shall be 304.8 mm (12 inches) long. The top-rail section of doors having tie rods extending between stiles shall have blocking at the section cut to provide anchorage for the tie rod. The top-rail section shall be anchored to the test bench so that the corner protrudes far enough to allow clearance for deflection of the side rail. A lever arm capable of supporting 845 N (190 pounds) shall be attached to the side-rail section at a point 482.6 mm (19 inches) from the inside edge of the top-rail. Position of the lever arm shall be parallel to the top-rail section. A weight support pad shall be attached to the lever arm at a point 482.6 mm (19 inches) from the inner edge of the side rail. The test section shall withstand a load of 756 N 170 pounds on the lever arm before reaching the point of failure. Failure is defined as a joint separation of 1.6 mm (1/16 inch) during test loading or a vertical rail rotational displacement of 3-1/2 degrees during test loading.

1.3.2 Wind Load Performance: Doors shall be of sufficient strength to withstand a design wind load of 1440 Pa 30 pounds per square foot of supported area with a deflection of not more than 1/175 times the length of the member. Doors shall be tested in accordance with ASTM E 330 at a pressure not less than 1.5 times the design load.

1.4 SUBMITTALS: Government approval is required for submittals with a "GA" designation; submittals having an "FIO" designation are for information only. The following shall be submitted in accordance with Section 01300 SUBMITTAL PROCEDURES:

SD-01 Data

Aluminum Doors and Frames; GA.

Manufacturer's descriptive data and catalog cuts including air-infiltration data.

SD-04 Drawings

Aluminum Doors and Frames; GA.

A schedule showing the location of each door shall be included with the drawings. Drawings showing elevations of each door and frame type, details and method of anchorage, details of construction, location and installation of hardware, shape and thickness of materials, and details of joints and connections.

SD-06 Instructions

Installation; FIO. Cleaning; FIO.

Manufacturers installation instructions and cleaning instructions.

SD-09 Reports

Full-Glazed; FIO.

For full-glazed, certified test reports stating that doors meet all test and specified requirements. Test shall be conducted by an independent testing laboratory within a period of 36 months preceding delivery of the doors to the site.

SD-14 Samples

Finishes; GA.

Samples of the color anodized coating, showing the extreme color range.

1.5 DELIVERY AND STORAGE: Materials delivered to the jobsite shall be inspected for damage, and shall be unloaded with a minimum of handling. Storage shall be in a dry location with adequate ventilation, free from dust, water, and other contaminants, and which permits easy access for inspecting and handling. Materials shall be neatly stored on the floor, properly stacked on nonabsorptive strips or wood platforms. Doors and frames shall not be covered with tarps, polyethylene film, or similar coverings.

1.6 WARRANTY: Manufacturer's standard performance guarantees or warranties that extend beyond a one-year period shall be provided.

PART 2 PRODUCTS

2.1 ALUMINUM DOORS AND FRAMES: Extrusions shall comply with ASTM B 221, Alloy 6063-T5 except alloy used for anodized color coatings shall be required to produce the specified color. Aluminum

sheets and strips shall comply with ASTM B 209, alloy and temper best suited for the purpose. Fasteners shall be hard aluminum or stainless steel.

2.1.1 Finishes: Finish shall be color anodized. Color anodized finish shall AA-M10C22A44 in accordance with the requirements of AA DAF-45. Color shall be in accordance with Section 09915 COLOR SCHEDULE.

2.1.2 Welding and Fastening: Where possible, welds shall be located on unexposed surfaces. Welds required on exposed surfaces shall be smoothly dressed. Welding shall produce a uniform texture and color in the finished work, free of flux and spatter. Exposed screws or bolts will be permitted only at inconspicuous locations and shall have heads countersunk.

2.1.3 Anchors: Anchors shall be stainless steel or steel with a hot-dipped galvanized finish. Anchors of the sizes and shapes required shall be provided for securing aluminum frames to adjacent construction. Anchors shall be placed near top and bottom of each jamb and at intermediate points not more than 625 mm (25 inches) apart. Mullions shall be anchored at head and sill. The bottom of each frame shall be anchored to the rough floor construction with 2.4 mm (3/32 inch) (3/32 inch) thick stainless steel angle clips secured to the back of each jamb and to floor construction. Stainless steel bolts and expansion rivets shall be used for fastening clip anchors

2.1.4 Provisions For Hardware: Hardware for aluminum doors is specified in Section 08700 BUILDERS' HARDWARE. Doors and frames shall be cut, reinforced, drilled, and tapped at the factory to receive template hardware. Reinforcement shall be provided in the core of doors as required to receive locks, door closers, and other hardware. Doors to receive surface applied hardware shall be reinforced as required.

2.1.5 Provisions For Glazing: Glazing shall be as specified in Section 08810 GLASS AND GLAZING. Metal glazing beads, vinyl inserts, and glazing gaskets shall be provided for securing glass. Glass stops shall be tamperproof on exterior side.

2.1.6 Weatherstripping: Weatherstripping shall be continuous silicone-treated wool pile type, or a type recommended by the door manufacturer, and shall be provided on head and jamb of exterior doors. Weatherstripping for bottom of doors shall be as shown. Weatherstripping shall be easily replaced without special tools, and shall be adjustable at meeting stiles of pairs of doors. Air leakage rate of weatherstripping shall not exceed 0.775 L/s per lineal meter (0.5 cfm per lineal foot) of crack when tested in accordance with ASTM E 283 at standard test conditions.

2.2 FABRICATION OF ALUMINUM FRAMES: Frames shall be single-glazed. Frames shall be fabricated of extruded aluminum shapes to contours as shown on the drawings. Shapes shown are representations of design, function, and required profile. Dimensions shown are minimum. Shapes of equivalent design may be submitted, subject to approval of samples. Minimum metal wall thickness shall be 2.29 mm, (0.090 inch,) except glazing beads, moldings, and trim shall be not less than 1.27 mm. (0.050 inch.) Frames that are to receive glass shall have removable snap-on glass stops and glazing beads. Joints in frame members shall be milled to a hairline watertight fit, reinforced, and secured mechanically by steel clip arrangement or by screw spline attachment.

2.3 FABRICATION OF ALUMINUM DOORS

2.3.1 Sizes, Clearances, and Edge Treatment: Doors shall be not less than 44.4 mm (1-3/4 inches) thick. Clearances shall be 1.6 mm (1/16 inch) at hinge stiles, 3 mm (1/8 inch) at lock stiles and top rails, and 5 mm (3/16 inch) at floors and thresholds. Single-acting doors shall be beveled 3 mm (1/8 inch) at lock and meeting stile edges. Double-acting doors shall have rounded edges at hinge stile, lock stile, and meeting stile edges.

2.3.1.1 Full-Glazed Stile and Rail Doors: Doors shall have wide stiles and rails as shown, and shall be fabricated from extruded aluminum hollow seamless tubes or from a combination of open-shaped members interlocked or welded together. Doors shall be single-glazed. Top and bottom rail shall be fastened together by means of welding or by 10 mm (3/8 inch) diameter cadmium-plated tensioned steel tie rods. Extruded aluminum snap-in glazing beads shall be provided on interior side of doors. Extruded aluminum theft-proof snap-in glazing beads or fixed glazing beads shall be provided on exterior or security side of doors. Glazing beads shall have vinyl insert glazing gaskets, designed to receive glass of thickness required. Glass is specified in Section 08810 GLASS AND GLAZING.

PART 3 EXECUTION

3.1 INSTALLATION OF DOORS, FRAMES, AND ACCESSORIES

3.1.1 Protection of Aluminum: Aluminum shall not be used where it will be in contact with copper or where it will contact water which flows over copper surfaces. Aluminum that will be in contact with wet or mortar, concrete, masonry, or ferrous metals shall be protected against galvanic or corrosive action by one of the following methods.

3.1.1.1 Paint: Aluminum surfaces to be protected shall be solvent cleaned and given a coat of zinc-molybdate primer and one coat of aluminum paint.

3.1.1.2 Nonabsorptive Tape or Gasket: Nonabsorptive tape or gasket shall be placed between the adjoining surfaces and shall be cemented to the aluminum surface using a cement compatible with aluminum.

3.1.2 Installation: Frames and framing members shall be accurately set in position to receive doors, and adjoining sidelights. Frames shall be plumb, square, level, and in alignment, and securely anchored to adjacent construction. Metal-to-metal joints between framing members shall be sealed as specified in Section 07920 CAULKING AND SEALANTS. Doors shall be accurately hung with proper clearances, and adjusted to operate properly. Protective coverings if provided shall be removed and the doors and frames shall be thoroughly cleaned.

-- End of Section --

INDEX

SECTION 08201

WOOD DOORS

Paragraph		Page
1.1	REFERENCE	08201-1
1.2	GENERAL REQUIREMENTS	08201-1
1.3	SUBMITTALS	08201-1
1.4	STORAGE	08201-2
1.5	HARDWARE	08201-2
1.6	WARRANTY	08201-2
2.1	GENERAL FABRICATION REQUIREMENTS	08201-2
2.2	FLUSH DOORS	08201-2
2.3	FIRE RATED DOORS	08201-3
2.4	FINISHING	08201-3
3.1	INSTALLATION OF DOORS	08201-3
3.2	FIELD FINISHING	08201-3

SECTION 08201

WOOD DOORS

PART 1 GENERAL

1.1 REFERENCES

The publications listed below form a part of this specification to the extent referenced. The publications are referred to in the text by basic designation only.

AMERICAN HARDBOARD ASSOCIATION (AHA)

AHA 135.4 (1982; R 1988) Basic Hardboard

AMERICAN SOCIETY FOR TESTING AND MATERIALS (ASTM)

ASTM E 152 (1981a) Fire Tests of Door Assemblies

NATIONAL FIRE PROTECTION ASSOCIATION (NFPA)

NFPA 80 (1992) Fire Doors and Windows

NFPA 101 (1994) Safety to Life from Fire in Buildings and Structures

NATIONAL WOOD WINDOW & DOOR ASSOCIATION (NWWDA)

NWWDA I.S. 1-A (1993) Architectural Wood Flush Doors

1.2 GENERAL REQUIREMENTS

1.2.1 Standard Products: Doors shall be of the type, size, and design indicated on the drawings, and shall be the standard products of manufacturers regularly engaged in the manufacture of wood doors.

1.2.2 Marking: Each door shall bear a stamp, brand, or other identifying mark indicating quality and construction of the door. The identifying mark or a separate certification shall include identification of the standard on which construction of the door is based, identity of the manufacturing plant, identification of the standard under which preservative treatment, if used, was made, and identification of the doors having a Type I glue bond.

1.3 SUBMITTALS: Government approval is required for submittals with a "GA" designation; submittals having an "FIO" designation are for information only. The following shall be submitted in accordance with Section 01300 SUBMITTAL PROCEDURES:

SD-04 Drawings

Wood Doors and Frames; GA.

Drawings indicating the location of each door, elevation of each type of door, details of construction, marks to be used to identify the doors, and location and extent of hardware blocking. Drawings shall include catalog cuts or descriptive data for doors, weatherstripping, and thresholds to be used.

SD-06 Instructions

Fire Doors; FIO.

Manufacturers preprinted installation and touch-up instructions.

SD-13 Certificates

Fire Rated Doors; FIO.

Certificates for oversize fire doors stating that the doors are identical in design, materials, and construction to a door that has been tested and meets the requirements for the class indicated.

1.4 STORAGE: Doors shall be stored in fully covered areas and protected from damage and from extremes in temperature and humidity. Doors shall be stored on supports to prevent warping or twisting, and to provide ventilation. Factory cartons or wrappers shall be kept intact until installation.

1.5 HARDWARE: Hardware, including weatherstripping and thresholds, is specified in Section 08700 BUILDERS' HARDWARE.

1.6 WARRANTY: Manufacturer's standard performance guarantees or warranties that extend beyond a 1 year period shall be provided.

PART 2 PRODUCTS

2.1 GENERAL FABRICATION REQUIREMENTS

2.1.1 Edge Sealing: Wood end-grain exposed at edges of doors shall be sealed prior to shipment.

2.1.2 Adhesives: Adhesives shall be in accordance with NWWDA I.S. 1-A, requirements Type II Bond Doors (water-repellent) for interior doors.

2.1.3 Prefitting: Doors shall be furnished prefitted or unfitted at the option of the Contractor.

2.2 FLUSH DOORS: Flush doors shall be solid core and shall conform to NWWDA I.S. 1-A, except for the one year acclimatization requirement in paragraph T-2, which shall not apply. Wood doors shall be 5-ply or 7-ply construction with faces, stiles, and rails bonded to the cores.

2.2.1 Core Construction:

2.2.1.1 Solid Cores: Door construction shall be glued wood block core or particle board core. Blocking and hardware reinforcements for particle board doors shall be blocking option HB-1-5 in accordance with NWWDA I.S. 1-A.

2.2.2 Face Panels

2.2.2.1 Painted Wood Veneer Doors: Veneer doors to receive paint finish shall be Economy Grade in accordance with NWWDA I.S. 1-A. Door finish shall be in accordance with paragraph FINISHING.

2.2.2.4 Hardboard Face: Hardboard face panels shall be in accordance with AHA 135.4. Hardboard face panels shall be composed of 1-ply 3.18 mm (1/8 inch) thick tempered hardboard. Panels shall be flush panel interior grade design as shown. Vertical stiles shall be manufacturer's standard softwood. Doors shall be furnished primed for finishing in accordance with paragraph FIELD FINISHING.

2.3 FIRE RATED DOORS: Fire rated door assemblies shall bear the listing identification label of a nationally recognized testing laboratory qualified to perform tests of fire door assemblies in accordance with ASTM E 152 and having a listing for the tested assemblies. The specific time interval rating on the labels shall be as shown. Door assemblies shall be in accordance with NFPA 80. Listing identification on labels shall be constructed and permanently applied by a method which results in their destruction should they be removed. Fire rated doors shall be particleboard core 20 or 30 staved lumber core 20 minute rating.

2.3.1 Reinforcement Blocking: Fire rated doors shall be provided, as required, with hardware reinforcement blocking, and top, bottom, and intermediate rail blocking. Lock blocks shall be not less than 125 mm (5 inches) by 450 mm. (18 inches.) Reinforcement blocking shall be in compliance with the manufacturer's labeling requirements. Reinforcement blocking shall not be of mineral material.

2.4 FINISHING

2.4.1 Factory Coated Paint Finish: Doors shall be given manufacturer's standard prime coat.

PART 3 EXECUTION

3.1 INSTALLATION OF DOORS

3.1.1 General Use Doors: Doors shall be fit, hung, and trimmed as required. Door shall have a clearance of 3 mm (1/8 inch) at the sides and top and shall have a bottom clearance of 6 mm (1/4 inch) over thresholds and 13 mm (1/2 inch) at other locations unless otherwise shown. The lock edge or both edges of doors shall be beveled at the rate of 3 mm (1/8 inch) in 50 mm. (2 inches.) Cuts made on the job shall be sealed immediately after cutting, using a clear varnish or sealer. Bottom of doors shall be undercut to allow clear door swing over carpeted areas. Edges of doors which have not been rounded or beveled at the factory shall be eased when the doors are installed.

3.1.2 Fire Doors: Installation, hardware, and operational characteristics shall conform to NFPA 80 and NFPA 101 and shall be in strict conformance with the manufacturer's printed instructions. Properly sized pilot holes shall be drilled for screws in door edges. Factory applied labels shall remain intact where installed. Labeled hinge stile edge and top edge of door shall not be trimmed. Lockstile edge and bottom edge may be trimmed only to the extent recommended by the door manufacturer.

3.2 FIELD FINISHING: Doors to receive field finishing shall be factory primed or sealed, as required, and then shall be finished in accordance with Section 09900 PAINTING, GENERAL. Factory applied sealer shall not prevent doors from accepting field finish. Color shall be in accordance with Section 09915 COLOR SCHEDULE.

-- End of Section --

INDEX

SECTION 08318

SECURITY-VAULT DOOR

Paragraph		Page
1.1	REFERENCES	08318-1
1.2	GENERAL REQUIREMENTS	08318-1
1.3	SUBMITTALS	08318-1
1.4	DELIVERY AND STORAGE	08318-1
2.1	VAULT DOOR AND FRAME	08318-1
3.1	INSTALLATION	08318-2

SECTION 08318

SECURITY-VAULT DOOR

PART 1 GENERAL

1.1 REFERENCES: The publications listed below form a part of this specification to the extent referenced. The publications are referred to in the text by basic designation only.

FEDERAL SPECIFICATIONS (FS)

FS AA-D-00600 (Rev C) Door, Vault, Security

1.2 GENERAL REQUIREMENTS: The vault door unit shall be a steel security-vault type door with frame, and ramp type threshold, and shall be a standard product of a manufacturer specializing in this type of fabrication.

1.3 SUBMITTALS: Government approval is required for submittals with a "GA" designation; submittals having an "FIO" designation are for information only. The following shall be submitted in accordance with Section 01330 SUBMITTAL PROCEDURES:

SD-01 Data

Security Vault Door; GA

Manufacturer's catalog data including catalog cuts and brochures. The data shall show that the proposed vault door unit conforms with the requirements in FS AA-D-00600, and has been tested and approved by the General Services Administration (GSA).

SD-13 Certificates

Security Vault Door; FIO.

Certification shall state that vault-door units that do not bear the GSA label are constructed to Class 5 standards.

1.4 DELIVERY AND STORAGE: Door and frame assemblies shall be delivered to the jobsite in a protective covering with the brand and name clearly marked thereon. Materials delivered to the jobsite shall be inspected for damage, and unloaded with a minimum of handling. Storage shall be in a dry location with adequate ventilation, free from dust, water, and other contaminants, and which permits easy access for inspection and handling. Door assemblies shall be stored off the floor on nonabsorptive strips or wood platforms. Doors and frames shall be handled carefully to prevent damage. Damaged items that cannot be restored to like-new condition shall be replaced.

PART 2 PRODUCTS

2.1 VAULT DOOR AND FRAME: Design and construction of the door and frame assembly shall conform to FS AA-D-00600. The door shall be Class 5, Type IIL - left opening swing without optical device, K - key change combination lock.

PART 3 EXECUTION

3.1 INSTALLATION: The vault door assembly shall be installed in strict compliance with the printed instructions and drawings provided by the manufacturer. After installation, the door, the locking mechanism, and the inner escape device shall be adjusted for proper operation.

-- End of Section --

INDEX

SECTION 08520

ALUMINUM WINDOWS

Paragraph		Page
1.1	REFERENCE	08520-1
1.2	WINDOW PERFORMANCE	08520-1
1.3	SUBMITTALS	08520-1
1.4	QUALIFICATION	08520-2
1.5	DELIVERY AND STORAGE	08520-2
1.6	WARRANTY	08520-2
2.1	ALUMINUM WINDOW TYPES	08520-3
2.2	WEATHERSTRIPPING	08520-3
2.3	ACCESSORIES	08520-3
2.4	GLASS AND GLAZING	08520-3
2.5	FINISH	08520-3
3.1	INSTALLATION	08520-3
3.2	ADJUSTMENTS AND CLEANING	08520-4

SECTION 08520

ALUMINUM WINDOWS

PART 1 GENERAL

1.1 REFERENCES: The publications listed below form a part of this specification to the extent referenced. The publications are referred to in the text by basic designation only.

ALUMINUM ASSOCIATION (AA)

AA DAF-45	(1980) Designation System for Aluminum Finishes

AMERICAN ARCHITECTURAL MANUFACTURERS ASSOCIATION (AAMA)

AAMA 101	(1993) Voluntary Specifications for Aluminum Prime Windows and Sliding Glass Doors

AMERICAN SOCIETY FOR TESTING AND MATERIALS (ASTM)

ASTM E 283	(1991) Determining the Rate of Air Leakage Through Exterior Windows, Curtain Walls, and Doors Under Specified Pressure Differences Across the Specimen
ASTM E 330	(1990) Structural Performance of Exterior Windows, Curtain Walls, and Doors by Uniform Static Air Pressure Difference
ASTM E 547	(1986) Water Penetration of Exterior Windows, Curtain Walls, and Doors by Cyclic Static Air Pressure Differential

1.2 WINDOW PERFORMANCE: Aluminum windows shall be designed to meet the following performance requirements. Testing requirements shall be performed by an independent testing laboratory or agency.

1.2.1 Structural Performance: Structural test pressures on window units shall be for positive load (inward) and negative load (outward) in accordance with ASTM E 330. After testing, there shall be no glass breakage, permanent damage to fasteners, hardware parts, support arms or actuating mechanisms or any other damage which could cause window to be inoperable. There shall be no permanent deformation of any main frame, sash or ventilator member in excess of the requirements established by AAMA 101 for the window types and classification specified in this section.

1.2.2 Air Infiltration: Air infiltration shall not exceed the amount established by AAMA 101 for each window type when tested in accordance with ASTM E 283.

1.2.3 Water Penetration: Water penetration shall not exceed the amount established by AAMA 101 for each window type when tested in accordance with ASTM E 547.

1.3 SUBMITTALS: Government approval is required for submittals with a "GA" designation; submittals having an "FIO" designation are for information only. The following shall be submitted in accordance with Section 01300 SUBMITTAL PROCEDURES:

SD-01 Data

Aluminum Windows; GA.

Manufacturer's descriptive data and catalog cut sheets.

SD-04 Drawings

Aluminum Windows; GA.

Drawings indicating elevations of window, rough-opening dimensions for each type and size of window, full-size sections, thicknesses of metal, fastenings, methods of installation and anchorage, connections with other work, type of wall construction, size and spacing of anchors, method of glazing, types and locations of operating hardware, mullion details, and weatherstripping details.

SD-06 Instructions

Aluminum Windows; FIO.

Manufacturer's preprinted installation instructions and cleaning instructions.

SD-09 Reports

Aluminum Windows; FIO.

Reports for each type of aluminum window attesting that identical windows have been tested and meet all performance requirements established under paragraph WINDOW PERFORMANCE.

SD-13 Certificates

Aluminum Windows; FIO.

Certificates stating that the aluminum windows are AAMA certified conforming to requirements of this section. Labels or markings permanently affixed to the window will be accepted in lieu of certificates.

SD-14 Samples

Aluminum Windows; GA.

Manufacturer's standard color samples of the specified finishes.

1.4 QUALIFICATION: Window manufacturer shall specialize in designing and manufacturing the type of aluminum windows specified in this section, and shall have a minimum of 3 years of documented successful experience. Manufacturer shall have the facilities capable of meeting contract requirements, single-source responsibility and warranty.

1.5 DELIVERY AND STORAGE: Aluminum windows shall be delivered to project site and stored in accordance with manufacturer's recommendations. Damaged windows shall be replaced with new windows.

1.6 WARRANTY: Manufacturer's standard performance guarantees or warranties that extend beyond a one year period shall be provided.

PART 2 PRODUCTS

2.1 ALUMINUM WINDOW TYPES: Aluminum windows shall consist of complete units including sash, glass, frame, weatherstripping, and hardware. Windows shall conform to AAMA 101 with a maximum air filtration rate of 0.50 CFM/FT of crack length. Windows shall be double-glazed.

2.1.1 Casement Windows: Aluminum casement windows shall conform to AAMA 101 Designation C-HC40 type with ventilators which swing on side jamb. Hinges shall be butt (close-up) type. Operators shall be roto-type. Cam handles shall secure ventilators tightly in the frame in the closed position.

2.2 WEATHERSTRIPPING: Weatherstripping for ventilating sections shall be of type designed to meet water penetration and air infiltration requirements specified in this section in accordance with AAMA 101, and shall be manufactured of material compatible with aluminum and resistant to weather. Weatherstrips shall be factory-applied and easily replaced in the field. Neoprene or polyvinylchloride weatherstripping are not acceptable where exposed to direct sunlight.

2.3 ACCESSORIES

2.3.1 Fasteners: Fastening devices shall be window manufacturer's standard design made from aluminum, non-magnetic stainless steel, cadmium-plated steel, nickel/chrome-plated steel or magnetic stainless steel in compliance with AAMA 101. Self-tapping sheet metal screws will not be acceptable for material thicker than 1.6 mm (1/16 inch).

2.3.2 Hardware: Hardware shall be as specified for each window type and shall be fabricated of aluminum, stainless steel, cadmium-plated steel, zinc-plated steel or nickel/chrome-plated steel of quality established by AAMA 101.

2.3.3 Window Anchors: Anchoring devices for installing windows shall be made of aluminum, cadmium-plated steel, stainless steel, or zinc-plated steel conforming to AAMA 101.

2.4 GLASS AND GLAZING: Aluminum windows shall be designed for inside glazing, field glazing, and for glass types scheduled on drawings and specified in Section 08810 GLASS AND GLAZING. Units shall be complete with glass and glazing provisions to meet AAMA 101. Glazing material shall be compatible with aluminum, and shall not require painting.

2.5 FINISH

2.5.1 Anodized Aluminum Finish: Exposed surfaces of aluminum windows shall be finished with anodic coating conforming to AA DAF-45: Architectural Class I, AA-M10-C22-A44, color anodic coating, 0.018 mm (0.7 mil) or thicker. Finish shall be free of scratches and other blemishes.

2.5.2 Color: Color shall be in accordance with Section 09915 COLOR SCHEDULE.

PART 3 EXECUTION

3.1 INSTALLATION: Aluminum windows shall be installed in accordance with approved shop drawings and manufacturer's published instructions. Aluminum surfaces in contact with masonry, concrete, wood and dissimilar metals other than stainless steel, zinc, cadmium or small areas of white bronze, shall be protected from direct contact using protective materials recommended by AAMA 101. The completed window installation shall be watertight in accordance with Section 07920 JOINT

SEALING. Glass and glazing shall be installed in accordance with requirements of this section and Section 08810 GLASS AND GLAZING.

3.2 ADJUSTMENTS AND CLEANING

3.2.1 Hardware Adjustments: Final operating adjustments shall be made after glazing work is complete. Operating sash shall operate smoothly and shall be weathertight when in locked position.

3.2.2 Cleaning: Aluminum window finish and glass shall be cleaned on exterior and interior sides in accordance with window manufacturer's recommendations. Alkaline or abrasive agents shall not be used. Precautions shall be taken to avoid scratching or marring window finish and glass surfaces.

-- End of Section --

INDEX

SECTION 08700

BUILDERS' HARDWARE

Paragraph		Page
1.1	REFERENCES	08700-1
1.2	SUBMITTALS	08700-2
1.3	DELIVERY, STORAGE AND HANDLING	08700-3
1.4	SPECIAL TOOLS	08700-3
2.1	GENERAL HARDWARE REQUIREMENTS	08700-3
2.2	TEMPLATES	08700-3
2.3	HINGES	08700-3
2.4	LOCKS	08700-3
2.5	KEYING	08700-4
2.6	DOOR CLOSING DEVICES	08700-4
2.7	DOOR CONTROLS - OVERHEAD HOLDERS	08700-4
2.8	SMOKE DETECTORS AND MAGNETIC HOLDERS	08700-4
2.9	ARCHITECTURAL DOOR TRIM	08700-4
2.10	AUXILIARY HARDWARE	08700-5
2.11	MISCELLANEOUS	08700-5
2.12	FASTENINGS	08700-5
2.13	FINISHES	08700-6
2.14	HARDWARE FOR FIRE DOORS	08700-6
3.1	APPLICATION	08700-6
3.2	OPERATIONAL TESTS	08700-6
3.3	HARDWARE SETS	08700-7

SECTION 08700

BUILDERS' HARDWARE

PART 1 GENERAL

1.1 REFERENCES: The publications listed below form a part of this specification to the extent referenced. The publications are referred to in the text by basic designation only.

AMERICAN SOCIETY FOR TESTING AND MATERIALS (ASTM)

ASTM E 283	(1991) Determining the Rate of Air Leakage Through Exterior Windows, Curtain Walls and Doors Under Specified Pressure Differences Across the Specimen

BUILDERS HARDWARE MANUFACTURERS ASSOCIATION (BHMA)

BHMA-01	(Effective thru Jun 1994) Directory of Certified Locks & Latches
BHMA-02	(Effective thru Jul 1994) Directory of Certified Door Closers
BHMA A156.1	(1988) Butts and Hinges
BHMA A156.2	(1989) Bored and Preassembled Locks and Latches
BHMA A156.4	(1992) Door Controls - Closers
BHMA A156.5	(1992) Auxiliary Locks & Associated Products
BHMA A156.6	(1986) Architectural Door Trim
BHMA A156.7	(1988) Template Hinge Dimensions
BHMA A156.8	(1994) Door Controls - Overhead Holders
BHMA A156.16	(1989) Auxiliary Hardware
BHMA A156.18	(1987) Materials and Finishes
BHMA A156.21	(1989) Thresholds

DOOR AND HARDWARE INSTITUTE (DHI)

DHI-02	(1986) Installation Guide for Doors and Hardware
DHI-03	(1989) Keying Systems and Nomenclature
DHI-04	(1976) Recommended Locations for Builders' Hardware for Custom Steel Doors and Frames
DHI-05	(1990) Recommended Locations for Architectural Hardware for Standard Steel Doors and Frames

DHI A115-W (1993) Wood Door Hardware Standards (Incl A115-W1 thru A115-W9)

FEDERAL STANDARDS (FED-STD)

FED-STD 795 (Basic) Uniform Federal Accessibility Standards

NATIONAL FIRE PROTECTION ASSOCIATION (NFPA)

NFPA 80 (1992) Fire Doors and Windows

NFPA 101 (1994) Safety to Life from Fire in Buildings and Structures

NFPA 105 (1993) Smoke-Control Door Assemblies

1.2 SUBMITTALS: Government approval is required for submittals with a "GA" designation; submittals having an "FIO" designation are for information only. The following shall be submitted in accordance with Section 01300 SUBMITTAL PROCEDURES:

SD-01 Data

Hardware and Accessories; GA.

Manufacturer's descriptive data, technical literature, catalog cuts, and installation instructions. Spare parts data for locksets, exit devices, closers, electric locks, electric strikes, electro-magnetic closer holder release devices, and electric exit devices, after approval of the detail drawings, and not later than 1 month prior to the date of beneficial occupancy. The data shall include a complete list of parts and supplies, with current unit prices and source of supply.

SD-07 Schedules

Hardware Schedule; GA.

Hardware schedule listing all items to be furnished. The schedule shall include for each item: the quantities; manufacturer's name and catalog numbers; sizes; detail information or catalog cuts; finishes; door and frame size and materials; location and hardware set identification cross-references to drawings; corresponding reference standard type number or function number from manufacturer's catalog if not covered by ANSI or BHMA; and list of abbreviations and template numbers.

Keying Schedule; GA.

Keying schedule developed in accordance with DHI-03, after the keying meeting with the user.

SD-13 Certificates

Hardware and Accessories; FIO.

The material supplier's or hardware manufacturer's certificates of compliance stating that the supplied material or hardware item meets specified requirements. Each certificate shall be signed by an official authorized to certify in behalf of material supplier or product manufacturer and shall identify quantity and date or dates of shipment or delivery to which the certificates apply. A statement that the proposed hardware items appear in BHMA-01 and BHMA-02 directories of certified products may be submitted in lieu of certificates. A separate Certificate of Compliance attesting that hardware items conform to the "Buy American Act" shall be included.

SD-19 Operation and Maintenance Manuals

Hardware and Accessories; FIO.

Six complete copies of maintenance instructions listing routine maintenance procedures, possible breakdowns and repairs, and troubleshooting guides.

1.3 DELIVERY, STORAGE, AND HANDLING: Hardware shall be delivered to the project site in the manufacturer's original packages. Each article of hardware shall be individually packaged in the manufacturer's standard commercial carton or container, and shall be properly marked or labeled to be readily identifiable with the approved hardware schedule. Each change key shall be tagged or otherwise identified with the door for which its cylinder is intended. Where double cylinder functions are used or where it is not obvious which is the key side of a door, appropriate instructions shall be included with the lock and on the hardware schedule. Manufacturer's printed installation instructions, fasteners, and special tools shall be included in each package.

1.4 SPECIAL TOOLS: Special tools, such as those supplied by the manufacturer and unique wrenches, shall be provided as required to adjust hardware items.

PART 2 PRODUCTS

2.1 GENERAL HARDWARE REQUIREMENTS: Hardware shall conform to the requirements specified herein and the HARDWARE SETS listing at the end of this section. Hardware set numbers correspond to the set numbers shown on the drawings. Hardware items providing accessibility and usability for physically handicapped shall comply with FED-STD 795

2.2 TEMPLATES: Requirements for hardware to be mounted on metal doors or metal frames shall be coordinated between hardware manufacturer and door or frame manufacturer by use of templates and other information to establish location, reinforcement required, size of holes, and similar details. Templates of hinges shall conform to BHMA A156.7.

2.3 HINGES: Hinges shall conform to BHMA A156.1. Hinges used on metal doors and frames shall also conform to BHMA A156.7. Except as otherwise specified, hinge sizes shall conform to the hinge manufacturer's printed recommendations.

2.3.1 Hinges for Reverse Bevel Doors with Locks: Hinges for reverse bevel doors with locks shall have pins that are made nonremovable by means such as a set screw in the barrel, or safety stud, when the door is in the closed position.

2.3.2 Contractor's Option: Hinges with antifriction bearings may be furnished in lieu of ball bearing hinges, except where prohibited for fire doors by the requirements of NFPA 80.

2.4 LOCKS: To the maximum extent possible, locksets and deadlocks shall be the products of a single manufacturer. Lock set trim (knobs, lever handles, roses and escutcheons) shall be of a simple design in accordance with manufacturer's standard practice. Locks shall be as manufactured by Schlage Lock Co. lever handle design shall be ‘Rhodes’.

2.4.1 Bored Lock: Bored lock, and strikes shall be series 4000 and shall conform to BHMA A156.2, Grade 1. Bored type locks and latches for doors 35 mm (1-3/8 inches) thick and over shall have adjustable bevel fronts or otherwise conform to the shape of the door.

2.4.2 Auxiliary Locks and Associated Products: Bored deadlocks shall conform to BHMA A156.5. Bolt and latch retraction shall be dead bolt style. Strike boxes shall be furnished with dead bolt and latch strikes for Grade 1.

2.4.3 Lock Cylinders: Lock cylinders shall comply with BHMA A156.5. Lock cylinder shall have not less than six pins. A grand master keying system shall be provided.

2.4.4 Lock Trim: Lock trim shall be cast, forged, or heavy wrought construction of commercial plain design. In addition to meeting the test requirement of BHMA A156.2 or BHMA A156.13, lever handles, roses, and escutcheons shall be 1.27 mm (0.050 inch) thick, if unreinforced. If reinforced, the outer shell shall be 0.89 mm (0.035 inch) thick and the combined thickness shall be 1.78 mm (0.070 inch) except that knob shanks shall be 1.52 mm (0.060 inch) thick.

2.5 KEYING: Locks shall be keyed in sets or subsets as scheduled. Change keys for locks shall be stamped with change number and the inscription "U.S. Property - Do Not Duplicate." Keys shall be supplied as follows:

Locks:	2 change keys each lock.
Master keyed sets:	2 keys each set.
Grand master keys:	4 total.
Blank keys:	12 total.

The keys shall be furnished to the Contracting Officer arranged in a container in sets or subsets as scheduled.

2.6 DOOR CLOSING DEVICES: Door closing devices shall conform to BHMA A156.4, Grade 1. Closing devices shall be products of one manufacturer for each type specified.

2.6.1 Surface Type Closers: Surface type closers shall be Grade 1, C02000 Full Cover with options PT-4H, Size 1 or 2 through Size 6, and PT-4D with back check position valve. Except as otherwise specified, sizes shall conform to the manufacturer's published recommendations. Closers for outswinging exterior doors shall have parallel arms or shall be top jamb mounted. Closers for doors close to a wall shall be of narrow projection so as not to strike the wall at the 90-degree open position.

2.7 DOOR CONTROLS - OVERHEAD HOLDERS: Door controls - overhead holders shall conform to BHMA A156.8.

2.8 SMOKE DETECTORS AND MAGNETIC HOLDERS: Smoke detectors and magnetic holders shall conform to Section 16721 FIRE DETECTION AND ALARM SYSTEM and BHMA A156.15. Door closers with integral holders connected to a separate detection device, or closers with integral holders and detector units sensing particles of combustion, which when activated will release the holder mechanism causing the closer to close the door, may be used in lieu of separate closers, detectors and magnetic holders. Alternate closers shall provide the same function as closers specified and shall be listed or labeled by a nationally recognized independent testing laboratory.

2.9 ARCHITECTURAL DOOR TRIM: Architectural door trim shall conform to BHMA A156.6.

2.9.1 Door Protection Plates

2.9.1.1 Kick Plates: Kick plates shall be Category J100, stainless steel. Width of plates shall be 50 mm (2 inches) less than door width. Height shall be 400 mm, 16 inches. Edges of metal plates shall be beveled.

2.9.2 Push Plates: Minimum stainless steel beveled four edges.

2.9.2.1 Flat Plates: Flat plates shall be Category J300, bronze (US 612), size 4x16. Edges of metal plates shall be beveled.

2.9.3 Door Pulls and Push/Pull Units

2.9.3.1 Arm Pulls: Arm pulls shall be Category J400, double base, bronze.

2.9.4 Push and Pull Bars: Push and pull bars shall be Category J500, bronze. Edges of mounting plates shall be beveled.

2.10 AUXILIARY HARDWARE: Auxiliary hardware, consisting of door holders, door stops shall conform to BHMA A156.16. Lever extension flush bolts shall be Type L04081. Dust-proof strikes shall be Type L04011 for doors that are not fire rated. Dust-proof strikes shall be Type L04021 for fire rated doors. Other auxiliary hardware of the types listed below, shall conform to BHMA A156.16.

Hand Rail Brackets: L03081

2.11 MISCELLANEOUS

2.11.1 Automatic Door Bottoms: Automatic door bottoms shall be mortised type with aluminum housing cover. Door bottom shall have a seal and shall be actuated by the opening and closing of the door. The door bottom shall exclude light when the door is in the closed position and shall inhibit the flow of air through the unit.

2.11.2 Metal Thresholds: Thresholds shall conform to BHMA A156.21. Thresholds for exterior doors shall be bronze of the type indicated and shall provide proper clearance and an effective seal with specified weather stripping. Where required, thresholds shall be modified to receive projecting bolts of flush bolts . Thresholds for doors accessible to the handicapped shall be beveled with slopes not exceeding 1:2 and with heights not exceeding 13 mm. (1/2 inch.) Air leakage rate of weatherstripping shall not exceed 0.775 l/s per lineal meter (0.5 cubic feet per minute per lineal foot) of crack when tested in accordance with ASTM E 283 at standard test conditions.

2.11.3 Aluminum Housed Type Weatherseals: Weatherseals of the type indicated shall consist of extruded aluminum retainers not less than 1.78 mm (0.07 inch) wall thickness with vinyl, neoprene, silicone rubber, polyurethane or vinyl brush inserts. Aluminum shall be clear natural anodized. Weatherseal material shall be of an industrial/commercial grade. Seals shall remain functional through all weather and temperature conditions. Air leakage rate of weatherstripping shall not exceed 0.775 L/s per lineal meter (0.5 cubic feet per minute per lineal foot) of crack when tested in accordance with ASTM E 283 at standard test conditions.

2.11.4 Gasketing: Gasketing shall be a compression type seal, silicon based, self-adhesive product for use on steel door frames with wood doors for 20-minute. Color shall be white. Air leakage rate of weatherstripping shall not exceed 0.775 L/s per lineal meter (0.5 cubic feet per minute per lineal foot) of crack when tested in accordance with ASTM E 283 at standard test conditions.

2.12 FASTENINGS: Fastenings of proper type, size, quantity, and finish shall be supplied with each article of hardware. Machine screws and expansion shields shall be used for attaching hardware to concrete or masonry. Fastenings exposed to the weather in the finished work shall be of brass, bronze, or stainless steel. Sex bolts, through bolts, or machine screws and grommet nuts, where used on reverse-bevel exterior doors equipped with full-surface hinges, shall employ one-way screws or other approved tamperproof screws.

2.13 FINISHES: Unless otherwise specified, finishes shall conform to those identified in BHMA A156.18. Where painting of primed surfaces is required, painting is specified in Section 09900 PAINTING, GENERAL.

2.14 HARDWARE FOR FIRE DOORS: Hardware for fire doors shall conform to the requirements of NFPA 80 and NFPA 101.

PART 3 EXECUTION

3.1 APPLICATION: Hardware shall be located in accordance with DHI-04 and DHI-05. When approved, slight variations in locations or dimensions will be permitted. Application shall be in accordance with DHI-02 or DHI A115-W. Door control devices for exterior doors such as closers and holders, shall normally attach to doors with thru bolts and nuts or sex bolts. Electric hardware items shall be installed in accordance with manufacturer's printed installation procedures.

3.1.1 Hardware for Fire Doors and Smoke-Control Door Assemblies: Hardware for fire doors shall be installed in accordance with the requirements of NFPA 80. Exit devices installed on fire doors shall have a visible label bearing the marking "Fire Exit Hardware". Other hardware installed on fire doors, such as locksets, closers, and hinges shall have a visible label or stamp indicating that the hardware items have been approved by an approved testing agency for installation on fire-rated doors. Hardware for smoke-control door assemblies shall be installed in accordance with NFPA 105.

3.1.2 Door-Closing Devices: Door-closing devices shall be installed and adjusted in accordance with the templates and printed instructions supplied by the manufacturer of the devices. Insofar as practicable, doors opening to or from halls and corridors shall have the closer mounted on the room side of the door.

3.1.3 Kick Plates: Kick plates shall be installed on the push side of single-acting doors.

3.1.4 Auxiliary Hardware: Lever extension flush bolts shall be installed at the top and bottom of the inactive leaf of pairs of doors. The bottom bolt shall operate into a dust-proof floor strike or threshold.

3.1.5 Thresholds: Thresholds shall be secured with a minimum of 3 fasteners per single door width and 6 fasteners per double door width with a maximum spacing of 300 mm. (12 inches.) Exterior thresholds shall be installed in a bed of sealant with expansion anchors and brass screws. Minimum screw size shall be No. 10 length, dependent on job conditions, with a minimum of 19 mm (3/4 inch) thread engagement into the floor or anchoring device used.

3.1.6 Weatherseals: Weatherseals shall be located as indicated, snug to door face and fastened in place with color matched metal screws after door and frames have been finish painted. Screw spacing shall be as recommended by manufacturer.

3.1.7 Gasketing: Gasketing shall be installed at the inside edge of the hinge and head and latch sides of door frame. Frames shall be toleranced for a 3 mm (1/8 inch) clearance between door and frame. Frames shall be treated with tape
primer prior to installation.

3.2 OPERATIONAL TESTS: Prior to acceptance of any electrical hardware system, an operational test shall be performed to determine if devices are operating as intended by the specifications. Wiring shall be tested for correct voltage, current carrying capacity, and proper grounding.

3.3 HARDWARE SETS

HW-1 (Door 1, 2, 9, 10, 14, 15)

Each door to have:

1-1/2	Pair Hinges	A8133, 4-1/2x4-1/2	600
1	Lock	F81, lever handle	612
1	Door Stop	L02101 with toggle bolt (expansion bolts at doors 9, 10)	612

HW-2 (Door 3, 12)

Each door to have:

1-1/2	Pair Hinges	A8112, 4-1/2x4-1/2	600
1	Lock	F81, lever handle	612
1	Door Stop	L02101 with toggle bolt	612
1	Door Closer	C02011	600

HW-3 (Door 4)

Each pair of doors to have:

4	Pair Hinges	A5112, 4-1/2x4-1/2NRP	612
2	Lock	E215	612
2	Door Closer	C02011 w/PT 4D and PT 4G	612
2	Push Bars	J501	612
2	Pull Bars	J401, 12”	612
2	Ext. Flush Bolts	L04081, 24”	612
1	Dust Prof Strike	For Flush Bolt	612
1	Threshold	As detailed	612

HW-4 (Door 5,8)

Each door to have:

1-1/2	Pair Hinges	A2112, 4-1/2x4-1/2	600
1	Door Closer	C02011 w/PT 4D and PT 4G	600
1	Kick Plate	J102, 16” high	SS
1	Push Plate	J301, 4” x 16”	612
1	Pull	J401, 12”	612

HW-5 (Door 6,7)

Each door to have:

1-1/2	Pair Hinges	A2133, 4-1/2x4-1/2	612
1	Lock	F76, lever handle	612
1	Door Stop	L02101 with toggle bolt	612

HW-6 (Door 11, 18,24)

Each door to have:

1-1/2	Pair Hinges	A2133, 4-1/2x4-1/2NRP	612
1	Lock	F81, lever handle	612
1	Door Holder	L01251	612
1	Door Closer	C02011	600
1	Threshold	As detailed - 1/2” high x 5” wide	612
1	Weatherstrip	As detailed	600

HW-7 (Door 16, 17)

Each pair of doors to have:

3	Pair Hinges	A8133, 4-1/2x4-1/2NRP	600
1	Lock (Deadbolt)	E216	612
1	Wall Stop	L02101 except 1: diameter	612
2	Pulls	J401, 3/4” diam. x 6” long	612
1	Surface Bolt	L04151, 6” long	612

HW-8 (Door 19)

Each door to have:

3	Pair Hinges	A2133, 4-1/2x4-1/2NRP	612
1	Lock	F81, lever handle	612
1	Door Stop	L01351	612
1	Door Holder	L08541	612
1	Cremonc	L04171	612
1	Threshold	As detailed - 1/2” high x 5” wide	612

HW-9 (Door 20 and barred door)

Each door to have:

1-1/2	Pair Hinges	A8133, 4-1/2x4-1/2NRP	600
1	Lock	F86, lever handle	612
2	Door Stops	L02101	612
1	Closer w/Smoke Detector	As specified	600
1-1/2	Pair Hinges	A8381 4x4-1/2	600
1	Deadlock	F16 double cylinder	612

HW-10 (Door 13, 21)

Each door to have:

1-1/2	Pair Hinges	A8112, 4-1/2x4-1/2	600
1	Lock	F81, lever handle	612
1	Door Stop	L02101 with toggle bolt	612
1	Door Closer	C02011	600
1	Automatic Door Bottom	As specified, similar to Pemko 434 ARL	612
1	Sound Sealer	Similar to Pemko S88, at head & jambs	white

HW-11 (Door 22,23)

Each door to have:

1-1/2	Pair Hinges	A8112, 4-1/2x4-1/2 NRP	600
1	Lock	F86, lever handle	612
1	Door Closer	C02021	600

HW-12 (Door 25, 26)

Each pair of gates to have:

1-1/2	Pair Hinges	A2133, 5x5	612
1	Bar Latch	Heavy duty flat bar latch 5”x1-1/8” min.	612
1	Pull	J401, 8”	612

Miscellaneous Hardware:

1. Sliding window hardware: Similar to Engineered Products Co (EPCO) No. 710-1 Assembly with two spring activated locks and two GP-15 pull 626

-- End of Section --

INDEX

SECTION 08810

GLASS AND GLAZING

Paragraph		Page
1.1	REFERENCES	08810-1
1.2	SUBMITTALS	08810-1
1.3	SYSTEM DESCRIPTION	08810-2
1.4	DELIVERY, STORAGE AND HANDLING	08810-2
1.5	PROJECT/SITE CONDITIONS	08810-2
1.6	WARRANTY	08810-2
2.1	ROLLED GLASS	08810-2
2.2	INSULATING GLASS	08810-3
2.3	HEAT-TREATED GLASS:	08810-3
2.4	GLAZING ACCESSORIES	08810-3
3.1	PREPARATION	08810-3
3.2	INSTALLATION	08810-3
3.3	CLEANING	08810-3
3.4	PROTECTION	08810-3

SECTION 08810

GLASS AND GLAZING

PART 1 GENERAL

1.1 REFERENCES: The publications listed below form a part of this specification to the extent referenced. The publications are referred to in the text by basic designation only.

AMERICAN SOCIETY FOR TESTING AND MATERIALS (ASTM)

ASTM C 920	(1987) Elastomeric Joint Sealants
ASTM C 1036	(1991) Flat Glass
ASTM C 1048	(1992) Heat-Treated Flat Glass - Kind HS, ASTM C 1172 (1991) Laminated Architectural Flat Glass
ASTM D 395	(1989) Rubber Property - Compression Set
ASTM E 163	(1984) Fire Tests of Window Assemblies
ASTM E 773	(1988) Seal Durability of Sealed Insulating Glass Units
ASTM E 774	(1988) Sealed Insulating Glass Units

FLAT GLASS MARKETING ASSOCIATION (FGMA)

FGMA-01	(1990) Glazing Manual

NATIONAL FIRE PROTECTION ASSOCIATION (NFPA)

NFPA 80	(1992) Fire Doors and Windows

1.2 SUBMITTALS: Government approval is required for submittals with a "GA" designation; submittals having an "FIO" designation are for information only. The following shall be submitted in accordance with Section 01300 SUBMITTAL PROCEDURES:

SD-01 Data

Glass; GA. Glazing Accessories; GA.

Manufacturer's descriptive product data, handling and storage recommendations, installation instructions, and cleaning instructions.

SD-04 Drawings

Glazing Materials and Accessories; GA.

Drawings showing complete details of the proposed setting methods, mullion details, edge blocking, size of openings, frame details, materials, and types and thickness of glass.

Drawing showing complete details of the proposed setting methods and materials.

SD-13 Certificates

Glass; F10.

Certificates stating that the glass meets the specified requirements. Labels or marking affixed to the glass will be accepted in lieu of certificates.

SD-14 Samples

Glass; GA.

Two 203.2 x 254 mm (8 x 10 inch) samples of each of the following: patterned glass, and insulating glass units.

1.3 SYSTEM DESCRIPTION: Glazing systems shall be fabricated and installed watertight and airtight to withstand thermal movement and wind loading without glass breakage, gasket failure, deterioration of glazing accessories, and defects in the work.

1.4 DELIVERY, STORAGE AND HANDLING: Glazing compounds shall be delivered to the site in the manufacturer's unopened containers. Glass shall be stored indoors in a safe, well ventilated dry location in accordance with manufacturer's instructions, and shall not be unpacked until needed for installation. Glass shall not be stored on site over 1 month.

1.5 PROJECT/SITE CONDITIONS: Glazing work shall not be started until outdoor temperature is above 5 degrees C (40 degrees F) and rising, unless procedures recommended by glass manufacturer and approved by Contracting Officer are made to warm the glass and rabbet surfaces. Ventilation shall be provided to prevent condensation of moisture on glazing work during installation. Glazing work shall not be performed during damp or raining weather.

1.6 WARRANTY

1.6.1 Insulating Glass: Manufacturer shall warrant the insulating glass to be free of fogging or film formation on the internal glass surfaces caused by failure of the hermetic seal for a period of 10 years from Date of Substantial Completion. Warranty shall be signed by manufacturer.

PART 2 PRODUCTS

2.1 ROLLED GLASS

2.1.1 Wired Glass: Wired glass shall be Type II flat type, Class 1 - translucent, Quality q7 - decorative, Form 1 - wired and polished both sides, conforming to ASTM C 1036. Wire mesh shall be polished stainless steel Mesh 2 - square. Wired glass for fire-rated windows shall bear an identifying UL label or the label of a nationally recognized testing agency, and shall be rated for 45 minutes when tested in accordance with ASTM E 163.

2.1.2 Rear Project Screen: Screen shall be 1/4-inch thick, select quality, clear float glass with a .009 inch optical coating, and have a reflective gain of 1.3. Material to be completely seamless, fire and fungus resistant. The optical coating shall be washable and strong enough to retain glass sharks if broken. Frames to have removable stop and vinyl gasket, both sides. Screen shall be set on lead, plastic, or neoprene setting blocks at quarter points along bottom.

2.2 INSULATING GLASS: Insulating glass shall be Class A preassembled units of dual-seal construction consisting of lites of glass separated by an aluminum spacer and dehydrated space conforming to ASTM E 773 and ASTM E 774. Aluminum spacer shall be roll-formed, with bent or tightly soldered joints to completely seal the spacer periphery and eliminate moisture and hydrocarbon vapor transmission into airspace through the corners. Primary seal shall be compressed polyisobutylene and the secondary seal shall be a specially formulated silicone. Glass types shall be as follows:
2.2.1 Clear Insulating Glass: Glass for two-pane insulating units shall be Type I annealed glass, Class 1 - clear, Quality q5 - glazing B, conforming to ASTM C 1036. Glass performance shall be R-Value/Winter Nighttime 1.75. Glass units shall be 1/2 inch to 5/8 inch thick.

2.3 HEAT-TREATED GLASS: Heat-treated glass shall conform to the following requirements.

2.3.1 Tempered Glass: Tempered glass shall be kind FT fully tempered transparent flat type, Class 1-clear, Condition A uncoated surface, Quality q3 - glazing select, conforming to ASTM C 1048.

2.4 GLAZING ACCESSORIES

2.4.1 Preformed Tape: Preformed tape shall be elastomeric rubber extruded into a ribbon of a width and thickness suitable for specific application. Tape shall be of type which will remain resilient, have excellent adhesion, and be chemically compatible to glass, metal, or wood.

2.4.2 Sealant: Sealant shall be elastomeric conforming to ASTM C 920, Type S or M, Grade NS, Class 12.5, Use G, of type chemically compatible with setting blocks, preformed sealing tape and sealants used in manufacturing insulating glass. Color of sealant shall be as shown in Section 09915 COLOR SCHEDULE.

2.4.3 Setting and Edge Blocking: Neoprene setting blocks shall be dense extruded type conforming to ASTM D 395, Method B, Shore A durometer between 70 and 90. Edge blocking shall be Shore A durometer of 50 (+ or - 5). Silicone setting blocks shall be required when blocks are in contact with silicone sealant. Profiles, lengths and locations shall be as required and recommended in writing by glass manufacturer.

PART 3 EXECUTION

3.1 PREPARATION: Openings and framing systems scheduled to receive glass shall be examined for compliance with approved shop drawings, FGMA-01 and glass manufacturer's recommendations including size, squareness, offsets at corners, presence and function of weep system, face and edge clearance requirements and effective sealing between joints of glass-framing members. Detrimental materials shall be removed from glazing rabbet and glass surfaces and wiped dry with solvent. Glazing surfaces shall be dry and free of frost.

3.2 INSTALLATION: Glass and glazing work shall be performed in accordance with approved shop drawings, FGMA-01, glass manufacturer's instructions and warranty requirements. Glass shall be installed with factory labels intact and removed only when instructed. Wired glass shall be installed in accordance with NFPA 80. Edges and corners shall not be ground, nipped or cut after leaving factory. Springing, forcing or twisting of units during installation will not be permitted.

3.3 CLEANING: Upon completion of project, outside surfaces of glass shall be washed clean and the inside surfaces of glass shall be washed and polished in accordance with glass manufacturer's recommendations.

3.4 PROTECTION: Glass work shall be protected immediately after installation. Glazed openings shall be identified with suitable warning tapes, cloth or paper flags, attached with non-staining adhesives. Glass

units which are broken, chipped, cracked, abraded, or otherwise damaged during construction activities shall be removed and replaced with new units.

-- End of Section --

INDEX

SECTION 09250

GYPSUM WALLBOARD

Paragraph		Page
1.1	REFERENCES	09250-1
1.2	SYSTEM DESCRIPTION	09250-2
1.3	SUBMITTALS	09250-2
1.4	QUALIFICATIONS	09250-2
1.5	DELIVERY, STORAGE AND HANDLING	09250-2
1.6	ENVIRONMENTAL CONDITIONS	09250-2
2.1	NON-LOADBEARING STUD WALLS	09250-2
2.2	LOADBEARING STUD WALLS	09250-3
2.3	SUSPENDED CEILING FRAMING	09250-3
2.4	GYPSUM BOARD	09250-3
2.5	ACCESSORIES	09250-3
3.1	INTERIOR WALL FRAMING	09250-4
3.2	SUSPENDED CEILING FRAMING	09250-4
3.3	APPLICATION OF GYPSUM BOARD	09250-5
3.4	TAPING AND FINISHING	09250-5
3.5	FIRE-RESISTANT ASSEMBLIES	09250-5
3.6	PATCHING	09250-5

SECTION 09250

GYPSUM WALLBOARD

PART 1 GENERAL

1.1 REFERENCES: The publications listed below form a part of this specification to the extent referenced. The publications are referred to in the text by basic designation only.

AMERICAN SOCIETY FOR TESTING AND MATERIALS (ASTM)

ASTM A 580	(1991b) Stainless and Heat Resisting Steel Wire
ASTM A 853	(1991) Steel Wire, Carbon, for General Use
ASTM C 36	(1993) Gypsum Wallboard
ASTM C 475	(1989) Joint Compound and Joint Tape for Finishing Gypsum Board
ASTM C 557	(1993) Adhesive for Fastening Gypsum Wallboard to Wood Framing
ASTM C 630	(1993) Water-Resistant Gypsum Backing Board
ASTM C 645	(1992) Non-Load (Axial) Bearing Steel Studs, Runners (Track), and Rigid Furring Channels for Screw Application of Gypsum Board
ASTM C 754	(1988) Installation of Steel Framing Members to Receive Screw-Attached Gypsum
ASTM C 840	(1988) Application and Finishing of Gypsum Board
ASTM C 955	(1993) Load-Bearing (Transverse and Axial) Steel Studs, Runners (Track), and Bracing or Bridging for Screw Application of Gypsum Board and Metal Plaster Bases
ASTM C 1002	(1993) Steel Drill Screws for the Application of Gypsum Board or Metal Plaster Bases

FACTORY MUTUAL ENGINEERING AND RESEARCH (FM)

FM P8016	(1993) Specification Tested Products Guide

FEDERAL SPECIFICATIONS (FS)

FS QQ-N-281	(Rev D; Am 2) Nickel-Copper Alloy Bar, Rod, Plate, Sheet, Strip, Wire, Forgings and Structural and Special Shaped Sections

GYPSUM ASSOCIATION (GA)

GA 600	(1992) Fire Resistance Design Manual

UNDERWRITERS LABORATORIES (UL)

UL-05 (1993; supple) Fire Resistance Directory

1.2 SYSTEM DESCRIPTION

1.2.1 Fire-Rated Construction: Joints of fire-rated gypsum board enclosures shall be closed and sealed in accordance with UL requirements, and as required to meet pressurization requirements. Penetrations through rated partitions and ceilings shall be sealed tight with rated firestopping materials. Fire ratings shall be as indicated.

1.3 SUBMITTALS: Government approval is required for submittals with a "GA" designation; submittals having an "FIO" designation are for information only. The following shall be submitted in accordance with Section 01300 SUBMITTAL PROCEDURES:

SD-04 Drawings

Steel Framing; GA. Control Joints; GA. Fire-Resistant Assemblies; GA.

Drawings and installation details for ceiling framing, furring, special wall framing, and framed openings in walls and ceilings.

SD-13 Certificates

Gypsum Wallboard; GA. Water-Resistant Gypsum Board; GA. Steel Framing; GA.

Certificates stating that the steel framing and gypsum wallboard meet the specified requirements.

SD-14 Samples

1.4 QUALIFICATIONS: Manufacturer shall specialize in manufacturing the types of material specified and shall have a minimum of 10 years of documented successful experience. Installer shall specialize in the type of gypsum board work required and shall have a minimum of 5 years of documented successful experience.

1.5 DELIVERY, STORAGE AND HANDLING: Materials shall be delivered in original containers bearing the name of manufacturer, contents, and brand name. Materials shall be stored off the ground in a weathertight structure for protection. Gypsum boards shall be stacked flat, off floor and supported to prevent sagging and warpage. Adhesives and joint materials shall be stored in accordance with manufacturer's printed instructions. Damaged or deteriorated materials shall be removed from jobsite.

1.6 ENVIRONMENTAL CONDITIONS: Environmental conditions for application and finishing of gypsum board shall be in accordance with ASTM C 840. During the application of gypsum board without adhesive, a room temperature of not less than 4 degrees C (40 degrees F) shall be maintained. During the application of gypsum board with adhesive, a room temperature of not less than 10 degrees C (50 degrees F) shall be maintained for 48 hours prior to application and continuously afterwards until completely dry. Building spaces shall be ventilated to remove water not required for drying joint treatment materials. Drafts shall be avoided during dry hot weather to prevent materials from drying too rapidly.

PART 2 MATERIALS

2.1 NON-LOADBEARING STUD WALLS

2.1.1 Studs: Studs for non-loadbearing walls shall conform to ASTM C 645. Studs shall be prefabricated 0.69 mm thick (22 gauge) steel, C-shaped, punched web for utility access, G60 hot-dip galvanized after fabrication.

2.1.2 Runner Tracks: Floor and ceiling runner tracks shall conform to ASTM C 645. Tracks shall be prefabricated, U-shaped with minimum 22 mm (7/8 inch) flanges, unpunched web, gauge to match studs, G60 hot-dip galvanized after fabrication.

2.2 LOADBEARING STUD WALLS:

2.2.1 Studs: Loadbearing studs to support overhead supported toilet partitions shall conform to ASTM C 955. Studs shall be prefabricated, C-shaped with minimum 32 mm (1-1/4 inch) high flanges, punched web for utility access, 1.214 mm thick (18 gauge) steel, G60 hot-dip galvanized after fabrication.

2.2.2 Runner Tracks: Floor and ceiling runner tracks shall conform to ASTM C 955. Runners shall be prefabricated, U-shaped with minimum 22 mm (7/8 inch) flanges, unpunched web, thickness (gauge) to match studs, G60 hot-dip galvanized after fabrication.

2.3 SUSPENDED CEILING FRAMING: Main carrying channels members for suspended gypsum board ceilings shall conform to ASTM C 645. Carrying channels shall be formed from 1.519 mm thick (16 gauge) cold-rolled steel, hot-dipped galvanized after fabrication, 38 by 19 mm (1-1/2 x 3/4 inch) deep. Furring members shall be formed from cold-rolled steel, hot-dip galvanized after fabrication, 19 mm high by 19 mm deep. (3/4 inch high x 3/4 inch deep.)

2.4 GYPSUM BOARD: Gypsum board shall have square-cut ends, tapered or beveled edges and shall be maximum possible length.

2.4.1 Standard Gypsum Board: Regular gypsum board shall conform to ASTM C 36, and shall be 1200 mm (48 inches) wide.

2.4.2 Fire-Rated Gypsum Board: Fire-rated gypsum board shall conform to ASTM C 36, and shall be Type X, 1200 mm (48 inches) wide.

2.4.3 Water-Resistant Gypsum Board: Water-resistant gypsum board shall conform to ASTM C 630, regular or Type X as required, with water-resistant paper faces, paintable surfaces, and shall be 1200 mm (48 inch) width and maximum permissible length.

2.5 ACCESSORIES

2.5.1 Taping and Embedding Compound: Taping and embedding compound shall conform to ASTM C 475. Compound shall be specifically formulated and manufactured for use in embedding tape at gypsum wallboard joints and fastener heads, and shall be compatible with tape and substrate.

2.5.2 Finishing or Topping Compound: Finishing or topping compound shall conform to ASTM C 475. Compound shall be specifically formulated and manufactured for use as a finishing compound for gypsum board.

2.5.3 All-Purpose Compound: All-purpose compound shall be specifically formulated and manufactured to use as a taping and finishing compound, and shall be compatible with tape and substrate.

2.5.4 Joint Tape: Joint tape shall conform to ASTM C 475 and shall be as recommended by gypsum board manufacturer.

2.5.5 Screws: Screws shall conform to ASTM C 1002. Screws shall be self-drilling and self-tapping steel, Type S for light-gauge steel framing.

2.5.6 Adhesives: Adhesives shall conform to ASTM C 557. For securing gypsum board to metal framing, adhesive shall be as recommended by gypsum board manufacturer.

2.5.7 Hangers: Suspended ceiling runner channel hangers shall be soft, annealed steel wire not less than 4 mm (0.1620 inch) nominal diameter, conforming to ASTM A 853 .

2.5.9 Fastenings: Tie wire, clips, rings, and other fastenings shall be corrosion-resisting steel conforming to ASTM A 580, composition 302, 304, or 316, Condition A, or nickel-copper alloy conforming to FS QQ-N-281, Class A or B, annealed condition except that walls, partitions, and other vertical surfaces not incorporated in ceiling construction may be erected with soft, annealed steel conforming to ASTM A 853.

2.5.9.1 Tie Wire: Tie wire for constructing partitions and vertical furring, and for lacing shall be not less than 1.2 mm (0.0475 inch) diameter. Tie wire for other applications shall be not less than 1.6 mm (0.0625 inch) diameter.

2.5.9.2 Clips: Clips used in lieu of tie wire for securing the furring channels to the runner channels in ceiling construction shall be made from strip not less than 3 mm \1/8 inch) thick or shall be hairpin clip, formed of wire not less than 0.4 mm (0.01620 inch) nominal diameter. Other clips and rings or fastenings of similar materials shall be equivalent in holding power to that provided by tie wire for the specific application.

PART 3 EXECUTION

3.1 INTERIOR WALL FRAMING: Steel framing and furring members shall be installed in accordance with ASTM C 754. Members shall be in alignment with spacings not to exceed the maximum spacings indicated on drawings. Runners shall be aligned accurately at the floor and ceiling and securely anchored. Metal framing and furring system shall be capable of carrying a minimum transverse load of 5 psf without exceeding 5psf without exceeding either the allowable stress or a deflection of L/240.

3.1.1 Studs: Studs shall be plumbed, aligned, and secured on two sides of the flanges on both upper and lower runners.

3.1.2 Wall Openings: The framing system shall provide for the installation and anchorage of the required subframes or finish frames for wall openings at doors, window openings, and access panels. Partitions abutting continuous suspended ceilings shall be strengthened for rigidity at rough openings of more than 750 mm (30 inches) wide. Studs at openings shall be 0.912 mm thick (20 gauge) (20 gauge) minimum bare metal thickness and spot grouted at jamb anchor inserts. Double studs shall be fastened together with screws and secured to floor and overhead runners. Two studs placed back-to-back shall be used for framing solid-core doors, and doors over 900 mm (3 feet 0 inches) wide.

3.2 SUSPENDED CEILING FRAMING: Suspended ceiling system framing shall be installed in accordance with ASTM C 754.

3.2.1 Lateral Force Bracing of Suspended Gypsum Board Ceilings: Provide horizontal restraint using four #8 gauge wires secured to the main channel within 2" of the cross furring channel intersection and splayed 90 degrees from each other at an angle not exceeding 45 degrees from the plane of the ceiling. Horizontal restraint points shall be placed 12' o.c. in both directions with the first point within 4' from each wall. Attachment of the restraint wires to the structure above shall be adequate for the load imposed.

Ceiling areas of 144 square feet or less surrounded by walls which connect directly to the structure above do not require lateral force bracing.

3.2.2 Hangers: Hangers shall be spaced not more than 1200 mm (48 inches) along runner channels and 900 mm (36 inches) in the other direction or 1050 mm (42 inches) in both directions unless otherwise indicated. Locations of hanger wires shall be coordinated with other work. Hangers at ends of runner channels shall be located not more than 150 mm (6 inches) from wall. Hanger wire shall be looped structural steel members, or center I-beam clamps with three full turns around itself. Sags or twists which develop in the suspended system shall be adjusted. Damaged or faulty parts shall be replaced.

3.2.3 Main Runners: Main runner channels shall be installed in accordance with ASTM C 754. Hanger wires shall be double strand saddle-tied to runner channels and the ends of hanger wire shall be twisted three times around itself. Main runners shall be located to within 150 mm (6 inches) of the paralleling wall to support the ends of cross furring. Main runners shall not come in contact with abutting masonry or concrete walls. Where main runners are spliced, ends shall be overlapped 300 mm (12 inches) with flanges of channels interlocked, and shall be securely tied at each end of splice with wire looped twice around the channels.

3.2.4 Furring Channels: Furring channels shall be spaced in accordance with ASTM C 754. Furring channels shall be secured to the runner channels and to structural supports at each crossing with tie wire, hairpin clips, or equivalent fastenings. Furring channels shall be located within 50 mm (2 inches) of parallel walls and beams, and shall be cut 13 mm (1/2 inch) short of abutting walls.

3.2.5 Ceiling Openings: Support members shall be provided as required at ceiling openings for access panels, recessed light fixtures, and air supply or exhaust. Support members shall be not less than 38 mm (1-1/2 inch) main runner channels and vertically installed suspension wires or straps shall be located to provide at least the minimum support specified herein for furring and wallboard attachment. Intermediate structural members not a part of the structural system, shall be provided for attachment or suspension of support members.

3.2.6 Light Fixtures: Light fixtures shall not be supported directly from suspended ceiling runners. Hanger wires for recessed or surface mounted light fixtures shall be anchored to structure at four corners of light fixtures, and additional wires shall be provided at appropriate locations to carry the weight of light fixtures.

3.3 APPLICATION OF GYPSUM BOARD: Gypsum board shall be installed in accordance with ASTM C 840 and as specified. Edges and ends of gypsum boards shall be cut to obtain neat fitting joints. End joints of adjoining boards shall be staggered, and shall be staggered on opposite sides of wall. Boards shall be applied with moderate contact without forcing in place. Holes for pipes, fixtures or other small openings shall be cut with a tool which will provide a neat fit. Screws shall be driven so that the heads are slightly below the plane of paper face. Fracturing the paper face or damaging the core shall be avoided. Trim shall be installed at external and internal angles formed by the intersecting gypsum board surfaces with other surfaces. Corner beads shall be installed to vertical and horizontal corners in accordance with manufacturer's published instructions.

3.3.1 Backing Board: Gypsum board and water-resistant gypsum backing board used as a substrate to receive ceramic tile shall be in accordance with ASTM C 840, System X.

3.4 TAPING AND FINISHING: Gypsum board taping and finishing shall be performed in accordance with ASTM C 840. Boards shall be kept free of dirt, oil and other foreign matter that could cause a lack of bond. Screw heads, dents, gouges, and cut-outs shall be filled with joint compound and sanded. Accessories at exposed joints, edges, corners, openings, and similar locations shall be taped, floated with joint compound, and sanded to produce surfaces ready for gypsum board finishes.

3.5 FIRE-RESISTANT ASSEMBLIES: Gypsum wallboard construction for fire-rated assemblies shall be in accordance with UL-05, FM P8016 or GA 600 for the design number indicated on drawings.

3.6 PATCHING: Surface defects and damage shall be corrected as required to leave gypsum board smooth, uniform in appearance, and ready to receive finish as specified.

-- End of Section --

INDEX

SECTION 09310

CERAMIC TILE

Paragraph		Page
1.1	REFERENCES	09310-1
1.2	SUBMITTALS	09310-2
1.3	DELIVERY AND STORAGE	09310-2
1.4	ENVIRONMENTAL REQUIREMENTS	09310-2
1.5	WARRANTY	09310-2
2.1	TILE	09310-2
2.2	WATER	09310-3
2.3	MORTAR AND GROUT	09310-3
3.1	PREPARATORY WORK AND WORKMANSHIP	09310-3
3.2	GENERAL INSTALLATION REQUIREMENTS	09310-3
3.3	INSTALLATION OF WALL TILE	09310-3
3.4	INSTALLATION OF FLOOR TILE	09310-3
3.5	CLEANING AND PROTECTION	09310-4

SECTION 09310

CERAMIC TILE

PART 1 GENERAL

1.1 REFERENCES: The publications listed below form a part of this specification to the extent referenced. The publications are referred to in the text by basic designation only.

AMERICAN NATIONAL STANDARDS INSTITUTE (ANSI)

ANSI A108.1A	(1992) Installation of Ceramic Tile in the Wet-Set Method, with Portland Cement Mortar
ANSI A108.1B	(1992) Installation of Ceramic Tile on a Cured Portland Cement Mortar Setting Bed with Dry-Set or Latex Portland Cement Mortar
ANSI A108.5	(1992) Installation of Ceramic Tile with Dry-Set Portland Cement Mortar or Latex-Portland Cement Mortar
ANSI A108.10	(1992) Installation of Grout in Tilework
ANSI A108.11	(1992) Interior Installation of Cementitious Backup Units
ANSI A118.1	(1992) Dry-Set Portland Cement Mortar
ANSI A118.4	(1992) Latex-Portland Cement Mortar
ANSI A118.6	(1992) Ceramic Tile Grouts
ANSI A118.9	(1992) Test Methods and Specifications for Cementitious Backer Units
ANSI A137.1	(1988) Ceramic Tile

AMERICAN SOCIETY FOR TESTING AND MATERIALS (ASTM)

ASTM C 373	(1988) Water Absorption, Bulk Density, Apparent Porosity, and Apparent Specific Gravity of Fired Whiteware Products
ASTM C 648	(1984; R 1989) Breaking Strength of Ceramic Tile
ASTM C 1027	(1984; R 1990) Determining Visible Abrasion Resistance of Glazed Ceramic Tile
ASTM C 1028	(1989) Determining the Static Coefficient of Friction of Ceramic Tile and Other Like Surfaces by the Horizontal Dynamometer Pull-Meter Method

TILE COUNCIL OF AMERICA (TCA)

TCA-01	(1994) Handbook for Ceramic Tile Installation

1.2 SUBMITTALS: Government approval is required for submittals with a "GA" designation; submittals having an "FIO" designation are for information only. The following shall be submitted in accordance with Section 01300 SUBMITTAL PROCEDURES:

SD-01 Data

Tile; GA. Mortar, Grout, and Adhesive; GA.

Manufacturer's catalog data.

SD-06 Instructions

Tile; F10. Mortar and Grout; FIO.

Manufacturers preprinted installation and cleaning instructions.

SD-13 Certificates

Tile; GA. Mortar, Grout, and Adhesive; GA.

Certificates indicating conformance with specified requirements. A master grade certificate shall be furnished for tile.

SD-14 Samples

Tile; GA. Accessories; GA.

Samples of sufficient size to show color range, pattern, type and joints.

1.3 DELIVERY AND STORAGE: Materials shall be delivered to the project site in manufacturer's original unopened containers with seals unbroken and labels and hallmarks intact. Materials shall be kept dry, protected from weather, and stored under cover.

1.4 ENVIRONMENTAL REQUIREMENTS: Ceramic tile work shall not be performed unless the substrate and ambient temperature is at least 10 degrees C (50 degrees F) and rising. Temperature shall be maintained above 10 degrees C (50 degrees F) while the work is being performed and for at least 7 days after completion of the work. When temporary heaters are used they shall be vented to the outside to avoid carbon dioxide damage to new tilework.

1.5 WARRANTY: Manufacturer's standard performance guarantees or warranties that extend beyond a 1-year period shall be provided.

PART 2 PRODUCTS

2.1 TILE: Tile shall be standard grade conforming to ANSI A137.1. Containers shall be grade sealed. Seals shall be marked to correspond with the marks on the signed master grade certificate. Tile shall be impact resistant with a minimum breaking strength for wall tile of 41 kg (90 lbs) and 113 kg (250 lbs) for floor tile in accordance with ASTM C 648. Water absorption shall be 0.5 maximum percent in accordance with ASTM C 373. Floor tile shall have a minimum static coefficient of friction of 0.5 in accordance with ASTM C 1028. Tile shall be Class III as rated by the manufacturer when tested in accordance with ASTM C 1027 for abrasion resistance as related to foot traffic.

2.1.1 Mosaic Tile: Ceramic mosaic tile and trim shall be unglazed with cushion edges. Tile size shall 50 by 50 mm 2 by 2 inches. Color shall be in accordance with Section 09915 COLOR SCHEDULE.

2.1.3 Glazed Wall Tile: Glazed wall tile and trim shall be cushion edged with matte glaze. Tile shall be 51x51 mm. (2x2 inches). Color shall be [in accordance with Section 09915 COLOR SCHEDULE.

2.2 WATER: Water shall be potable.

2.3 MORTAR AND GROUT: Mortar and grout shall conform to the following:

2.3.1 Dry-Set Portland Cement Mortar: ANSI A118.1.

2.3.2 Latex-Portland Cement Mortar: ANSI A118.4.

2.3.3 Ceramic Tile Grout: ANSI A118.6; latex-portland cement grout.

2.3.4 Cementitious Backer Board: Cementitious backer units shall comply with ANSI A118.9.

PART 3 EXECUTION

3.1 PREPARATORY WORK AND WORKMANSHIP: Surface to receive tile shall be inspected and shall conform to the requirements of ANSI A108.1A or ANSI A108.1B for surface conditions for the type setting bed specified and for workmanship. Variations of surface to be tiled shall fall within maximum values shown below:

TYPE	WALLS	FLOORS
Dry-Set Mortar	3 mm in 2.4 meters	3.0 mm in 3 meters
Dry-Set Mortar	1/8 inch in 8 ft.	1/8 inch in 10 ft.
Latex portland cement mortar	1/8 inch in 8 ft.	1/8 inch in 10 ft.

3.2 GENERAL INSTALLATION REQUIREMENTS: Tile work shall not be started until roughing in for mechanical and electrical work has been completed and tested, and built-in items requiring membrane waterproofing have been installed and tested. Floor tile installation shall not be started in spaces requiring wall tile until after wall tile has been installed. Tile in colors and patterns indicated shall be applied in the area shown on the drawings. Tile shall be installed with the respective surfaces in true even planes to the elevations and grades shown. Special shapes shall be provided as required for sills, recesses, offsets, external corners, and other conditions to provide a complete and neatly finished installation. Tile bases and coves shall be solidly backed with mortar.

3.3 INSTALLATION OF WALL TILE: Wall tile shall be installed in accordance with the TCA-01, methods W202 on masonry, W243 on gypsum board and W244 on cementitious backer units at shower.

3.3.1 Dry-Set Mortar and Latex-Portland Cement Mortar: Dry-set or Latex-portland cement shall be used to install tile in accordance with ANSI A108.5.

3.4 INSTALLATION OF FLOOR TILE: Floor tile shall be installed in accordance with TCA-01, method F113. Shower receptors are specified in Section 15400: Plumbing.

3.4.1 Dry-Set and Latex-Portland Cement: Latex-portland cement mortar shall be used to install tile directly over properly cured, plane, clean concrete slabs in accordance with ANSI A108.5. Latex portland cement shall be used when installing porcelain ceramic tile.

3.4.2 Ceramic Tile Grout: Ceramic Tile grout shall be prepared and installed in accordance with ANSI A108.10.

3.4.3 Cementitious Backer Board: Cementitious backer units shall be installed in accordance with ANSI A108.11.

3.5 CLEANING AND PROTECTING: Upon completion, tile surfaces shall be thoroughly cleaned in accordance with manufacturer's approved cleaning instructions. Acid shall not be used for cleaning glazed tile. Floor tile with resinous grout or with factory mixed grout shall be cleaned in accordance with instructions of the grout manufacturer. After the grout has set, tile wall surfaces shall be given a protective coat of a noncorrosive soap or other approved method of protection. Tiled floor areas shall be covered with building paper before foot traffic is permitted over the finished tile floors. Board walkways shall be laid on tiled floors that are to be continuously used as passageways by workmen. Damaged or defective tiles shall be replaced.

-- End of Section --

INDEX

SECTION 09510

ACOUSTICAL CEILINGS

Paragraph		Page
1.1	REFERENCES	09510-1
1.2	GENERAL REQUIREMENTS	09510-1
1.3	SUBMITTALS	09510-1
1.4	DELIVERY AND STORAGE	09510-2
1.5	ENVIRONMENTAL REQUIREMENTS	09510-2
1.6	SCHEDULING	09510-2
2.1	ACOUSTICAL UNITS	09510-2
2.2	SUSPENSION SYSTEM	09510-2
2.3	HANGERS	09510-2
2.4	FIRE RESISTIVE CEILING	09510-3
2.5	FINISHES	09510-3
2.6	COLORS AND PATTERNS	09510-3
2.7	CEILING ATTENUATION CLASS AND TEST	09510-3
3.1	INSTALLATION	09510-3
3.2	CLEANING	09510-3

SECTION 09510

ACOUSTICAL CEILINGS

PART 1 GENERAL

1.1 REFERENCES: The publications listed below form a part of this specification to the extent referenced. The publications are referred to in the text by basic designation only.

AMERICAN SOCIETY FOR TESTING AND MATERIALS (ASTM)

ASTM C 635	(1994) Manufacture, Performance, and Testing of Metal Suspension Systems for Acoustical Tile and Lay-In Panel Ceilings
ASTM C 636	(1992) Installation of Metal Ceiling Suspension Systems for Acoustical Tile and Lay-In Panels
ASTM E 119	(1988) Fire Tests of Building Construction and Materials
ASTM E 1264	(1990) Standard Classification for Acoustical Ceiling Products
ASTM E 1414	(1991a) Standard Test for Airborne Sound Attenuation Between Rooms Sharing a Common Ceiling Plenum.

UNDERWRITERS LABORATORIES (UL)

UL-05	(1995) Fire Resistance Directory

1.2 GENERAL REQUIREMENTS: Acoustical treatment shall consist of sound controlling units mechanically mounted on a ceiling suspension system. The unit size, texture, finish, and color shall be as specified. The location and extent of acoustical treatment shall be as shown on the drawings.

1.3 SUBMITTALS: Government approval is required for submittals with a "GA" designation; submittals having an "FIO" designation are for information only. The following shall be submitted in accordance with Section 01300 SUBMITTAL PROCEDURES:

SD-01 Data

Acoustical Ceiling System; GA.

Manufacturer's descriptive data and installation instructions.

SD-04 Drawings

Acoustical Ceiling System; GA.

Drawings shall show suspension system, method of anchoring and fastening, details, and reflected ceiling plan.

SD-13 Certificates

Fire Resistive Ceilings; FIO. Ceiling Attenuation Class and Test; FIO.

Test reports by an independent testing laboratory attesting that acoustical ceiling systems meet specified fire endurance and sound transmission requirements. Data attesting to conformance of the proposed system to Underwriters Laboratories, Inc. requirements for the fire endurance rating listed in UL-05 may be submitted in lieu of test reports.

SD-14 Samples

Acoustical Units; GA.

Two samples of each type of acoustical unit and each type of suspension grid tee section showing texture, finish, and color.

1.4 DELIVERY AND STORAGE: Materials shall be delivered to the site in the manufacturer's original unopened containers with brand name and type clearly marked. Materials shall be carefully handled and stored in dry, watertight enclosures. Immediately before installation, acoustical units shall be stored for not less than 24 hours at the same temperature and relative humidity as the space where they will be installed to assure temperature and moisture conditions.

1.5 ENVIRONMENTAL REQUIREMENTS: A uniform temperature of not less than 16 degrees C (60 degrees F) nor more than 27 degrees C (80 degrees F) and a relative humidity of not more than 70 percent shall be maintained before, during, and after installation of acoustical units.

1.6 SCHEDULING: Interior finish work such as masonry, concrete and tile work shall be complete and dry before installation. Mechanical, electrical, and other work above the ceiling line shall be completed and heating, ventilating, and air conditioning systems shall be installed and operating in order to maintain temperature and humidity requirements.

PART 2 PRODUCTS

2.1 ACOUSTICAL UNITS: Acoustical units shall conform to ASTM E 1264, Class A, and the following requirements:

2.1.1 Units for Exposed-Grid System

Type: III.
NRC grade: 75 minimum when tested on mounting No. 7.
Pattern: EIC.
Nominal size: 600 by 600 mm. 24 by 24 inches.
Edge detail: Angled Tegular.
Finish: Factory-applied standard finish.
LR grade: 1.
CAC range: 35 minimum.

2.2 SUSPENSION SYSTEM: Suspension system shall be standard and fire-resistive exposed-grid narrow width slotted flange as shown on drawings, and shall conform to ASTM C 635 for intermediate-duty systems. Surfaces exposed to view shall be aluminum or steel with a factory-applied white baked-enamel finish aluminum with a clear anodized finish. Wall molding shall have a flange of not less than 23 mm (15/16 inch) and shall be provided with outside corner caps. Inside corner caps shall be provided where, due to the configuration of the installation, they are needed to produce a workmanlike appearance.

2.3 HANGERS: Hangers shall be galvanized steel wire. Hangers and attachment shall support a minimum 1330 N (300 pound) ultimate vertical load without failure of supporting material or attachment.

2.4 FIRE RESISTIVE CEILINGS: Acoustical ceiling systems indicated as fire resistant shall be rated for fire endurance as indicated when tested in accordance with ASTM E 119. Suspended ceiling shall have been tested with a specimen roof assembly representative of the indicated construction, including mechanical and electrical work within ceiling space openings for light fixtures, and air outlets, and access panels. Ceiling assembly rating shall be 1 hour exposed grid system as shown on drawings.

2.5 FINISHES: Acoustical units and suspension system members shall have manufacturer's standard textures, patterns and finishes as specified. Ceiling suspension system components shall be treated to inhibit corrosion.

2.6 COLORS AND PATTERNS: Colors and patterns for acoustical units and suspension system components shall be as specified in Section 09915 COLOR SCHEDULE.

2.7 CEILING ATTENUATION CLASS AND TEST: Ceiling attenuation class (CAC) range of acoustical units, when required, shall be determined in accordance with ASTM E 1414. Test ceiling shall be continuous at the partition and shall be assembled in the suspension system in the same manner that the ceiling will be installed on the project. System shall be tested with all acoustical units installed.

PART 3 EXECUTION

3.1 INSTALLATION: Acoustical work shall be provided complete with necessary fastenings, clips, and other accessories required for a complete installation. Mechanical fastenings shall not be exposed in the finished work. Hangers shall be laid out for each individual room or space. Hangers shall be placed to support framing around beams, ducts, columns, grilles, and other penetrations through ceilings. Main runners and carrying channels shall be kept clear of abutting walls and partitions. At least two main runners shall be provided for each ceiling span. Wherever required to bypass an object with the hanger wires, a subsuspension system shall be installed, so that all hanger wires will be plumb.

3.1.1 Suspension System: Suspension system shall be installed in accordance with ASTM C 636 and as specified herein. There shall be no hanger wires or other loads suspended from underside of steel decking. Contractor shall furnish and install additional structural support members as necessary to allow hangers to install plumbing and not be attached to the roof deck.

3.1.1.1 Plumb Hangers: Hangers shall be plumb and shall not press against insulation covering ducts and pipes.

3.1.1.2 Splayed Hangers: Where hangers must be splayed (sloped or slanted) around obstructions, the resulting horizontal force shall be offset by bracing, countersplaying, or other acceptable means.

3.1.2 Wall Molding: Wall molding shall be provided where ceilings abut vertical surfaces. Wall molding shall be secured not more than 75 mm (3 inches) from ends of each length and not more than 400 mm (16 inches) on centers between end fastenings.

3.1.3 Acoustical Units: Acoustical units shall be installed in accordance with the approved installation instructions of the manufacturer. Edges of acoustical units shall be in close contact with metal supports, with each other, and in true alignment. Acoustical units shall be arranged so that units less than one-half width are minimized. Units in exposed-grid system shall be held in place with manufacturer's standard hold-down clips, if units weigh less than 5 kg per square m (1 psf) or if required for fire resistance rating.

3.2 CLEANING: Following installation, dirty or discolored surfaces of acoustical units shall be cleaned and left free from defects. Units that are damaged or improperly installed shall be removed and new units provided as directed.

-- End of Section --

INDEX

SECTION 09650

RESILIENT FLOORING

Paragraph		Page
1.1	REFERENCE	09650-1
1.2	SUBMITTALS	09650-1
1.3	DELIVERY AND STORAGE	09650-1
1.4	ENVIRONMENTAL REQUIREMENTS	09650-2
1.5	SCHEDULING	09650-2
1.6	EXTRA MATERIALS	09650-2
2.1	RUBBER TILE	09650-2
2.2	RESILIENT BASE	09650-2
2.3	EDGE STRIP	09650-2
2.4	ADHESIVE	09650-2
2.5	POLISH	09650-2
3.1	EXAMINATION/VERIFICATION OF CONDITIONS	09650-2
3.2	SURFACE PREPARATION	09650-2
3.3	MOISTURE TEST	09650-2
3.4	INSTALLATION OF RUBBER TILE	09650-2
3.5	INSTALLATION OF EDGE STRIPS	09650-3
3.6	INSTALLATION OF RESILIENT BASE	09650-3
3.7	CLEANING	09650-3
3.8	PROTECTION	09650-3

SECTION 09650

RESILIENT FLOORING

PART 1 GENERAL

1.1 REFERENCES: The publications listed below form a part of this specification to the extent referenced. The publications are referred to in the text by basic designation only.

AMERICAN SOCIETY FOR TESTING AND MATERIALS (ASTM)

ASTM F-1344 (1991) Rubber Floor Tile

FEDERAL SPECIFICATIONS (FS)

FS P-F-430 (Rev C; Am 1) Finish, Floor Water-Emulsion (For Use on Light Colored Floors)

FS P-W-155 (Rev C; Int Am 1) Wax, Floor, Water-Emulsion

FS SS-W-40 (Rev A; Int Am 1; Notice 1) Wall Base: Rubber, and Vinyl Plastic

1.2 SUBMITTALS: Government approval is required for submittals with a "GA" designation; submittals having an "FIO" designation are for information only. The following shall be submitted in accordance with Section 01300 SUBMITTAL PROCEDURES:

SD-01 Data

Resilient Flooring and Accessories; GA.

Manufacturer's descriptive data and installation instructions. Cleaning and maintenance instructions shall be included.

SD-09 Reports

Resilient Flooring and Accessories; FIO.

Copies of test reports showing that representative product samples of the flooring proposed for use have been tested by an independent testing laboratory within the past year and conform to the requirements specified.

SD-14 Samples

Resilient Flooring and Accessories; GA.

Three samples of each indicated color and type of flooring and base. Sample size shall be minimum 75 mm by 125 mm. (3 inches by 5 inches.)

1.3 DELIVERY AND STORAGE: Materials shall be delivered to the building site in original unopened containers, shall be stored in a clean dry area with temperature maintained above 21 degrees C (70 degrees F) for 2 days prior to installation, and shall be stacked according to manufacturer's recommendations.

1.4 ENVIRONMENTAL REQUIREMENTS: Areas to receive resilient flooring shall be maintained at a temperature above 21 degrees C (70 degrees F) for 2 days before application, during application and 2 days after application. A minimum temperature of 13 degrees C (55 degrees F) shall be maintained thereafter.

1.5 SCHEDULING: Resilient flooring application shall be scheduled after the completion of other work which would damage the finished surface of the flooring.

1.6 EXTRA MATERIALS: Twenty square feet of extra flooring material shall be furnished.

PART 2 PRODUCTS

2.1 RUBBER TILE: Rubber tile shall conform to ASTM F-1344 Class 1 homogeneous construction Type B through mottled 300 mm square. (12 inches square.) Surface shall be smooth. Overall thickness shall be 3 mm, (1/8 inch) thick. Color and pattern shall be as indicated.

2.2 RESILIENT BASE: Base shall conform to FS SS-W-40, Type I (rubber or Style A, (straight)-installed with carpet, Style B, (coved)-installed with resilient flooring. Base shall be 101.6 mm (4 inches) (4 inches) high and a minimum 3 mm (1/8 inch) thick. Preformed outside corners shall be furnished. Color shall be as indicated.

2.3 EDGE STRIP: Edge strip shall be vinyl, 25 mm (1 inch) wide, and of thickness to match the flooring. Color shall match floor color unless otherwise indicated.

2.4 ADHESIVE: Adhesive for flooring and wall base shall be as recommended by the flooring manufacturer.

2.5 POLISH: Polish shall conform to FS P-F-430 or FS P-W-155.

PART 3 EXECUTION

3.1 EXAMINATION/VERIFICATION OF CONDITIONS: The Contractor shall verify that site conditions are in agreement with the design package and shall report all conditions that will prevent a proper installation. The Contractor shall not take any corrective action without written permission from the Government.

3.2 SURFACE PREPARATION: Flooring shall be in a true, level plane. Before any work under this section is begun, all defects such as rough or scaling concrete, low spots, high spots, and uneven surfaces shall have been corrected, and all damaged portions of concrete slabs shall have been repaired as recommended by the flooring manufacturer. Concrete curing compounds, other than the type that does not adversely affect adhesion, shall be entirely removed from the slabs.

3.3 MOISTURE TEST: The suitability of the concrete subfloor for receiving the resilient flooring with regard to moisture content shall be determined by a moisture test as recommended by the flooring manufacturer.

3.4 INSTALLATION OF RUBBER TILE: Rubber tile flooring shall be installed with adhesive in accordance with the manufacturer's installation instructions. Tile lines and joints shall be kept square, symmetrical, tight, and even. Edge width shall vary as necessary to maintain full-size tiles in the field, but no edge tile shall be less than one-half the field tile size, except where irregular shaped rooms make it impossible. Flooring shall be cut to, and fitted around, all permanent fixtures, pipes, and outlets. Edge tile shall be cut, fitted, and scribed to walls after field flooring has been applied.

3.5 INSTALLATION OF EDGE STRIPS: Edge strips shall be secured with adhesive as recommended by the manufacturer. Edge strips shall be provided at locations where flooring termination is higher than the adjacent finished flooring, except at doorways where thresholds are provided.

3.6 INSTALLATION OF RESILIENT BASE: Wall base shall be installed with adhesive in accordance with the manufacturer's instructions. Base joints shall be tight and base shall be even with adjacent resilient flooring.

3.7 CLEANING: Immediately upon completion of installation of tile in a room or an area, flooring and adjacent surfaces shall be cleaned to remove all surplus adhesive. No sooner than 5 days after installation, flooring shall be washed with a nonalkaline cleaning solution, rinsed thoroughly with clear cold water, and, given two coats of polish. After each polish coat, floors shall be buffed to an even luster with an electric polishing machine.

3.8 PROTECTION: From the time of laying until acceptance, flooring shall be protected from damage. Flooring which becomes damaged, loose, broken, or curled shall be removed and replaced.

-- End of Section --

INDEX

SECTION 09680

CARPET

Paragraph		Page
1.1	REFERENCES	09680-1
1.2	SUBMITTALS	09680-1
1.3	DELIVERY AND STORAGE	09680-2
1.4	ENVIRONMENTAL REQUIREMENTS	09680-2
1.5	WARRANTY	09680-2
1.6	EXTRA MATERIAL	09680-2
2.1	CARPET TYPE	09680-3
2.2	ADHESIVES AND CONCRETE PRIMER	09680-4
2.3	MOLDING	09680-4
2.4	TAPE	09680-4
3.1	SURFACE PREPARATION	09680-4
3.2	MOISTURE TEST	09680-4
3.3	INSTALLATION	09680-4
3.4	CLEANING	09680-4
3.5	REMNANTS	09680-4

SECTION 09680

CARPET

PART 1 GENERAL

1.1 REFERENCES: The publications listed below form a part of this specification to the extent referenced. The publications are referred to in the text by basic designation only.

AMERICAN ASSOCIATION OF TEXTILE CHEMISTS AND COLORISTS (AATCC)

AATCC 134	(1991) Test Method: Electrostatic Propensity of Carpets

AMERICAN SOCIETY FOR TESTING AND MATERIALS (ASTM)

ASTM D 418	(1993) Pile Yarn Floor Covering Construction
ASTM D 1335	(1967; R 1972) Tuft Bind of Pile Floor Coverings
ASTM D 3936	(1980) Delamination Strength of Secondary Backing of Pile Floor Coverings
ASTM E 648	(1994a) Critical Radiant Flux of Floor-Covering Systems Using a Radiant Heat Energy Source

CARPET AND RUG INSTITUTE (CRI)

CRI 104	(1994) Commercial Carpet Installation Standard

CODE OF FEDERAL REGULATIONS (CFR)

16 CFR 1630	Standard for the Surface Flammability of Carpet and Rugs

1.2 SUBMITTALS: Government approval is required for submittals with a "GA" designation; submittals having an "FIO" designation are for information only. The following shall be submitted in accordance with Section 01300 SUBMITTAL PROCEDURES:

SD-01 Data

Carpet and Accessories; GA.

For each type of carpet material and installation accessory required, catalog data and printed documentation stating physical characteristics, durability, resistance to fading and flame resistance characteristics.

SD-04 Drawings

Installation; GA.

Layout drawings indicating areas receiving carpet, direction of pile, location of seams, and locations of edge molding.

SD-06 Instructions

Carpet and Accessories; FIO.

Three copies of the manufacturer's printed installation instructions for the carpet, including procedures for installation, preparation of substrate, seaming techniques, and recommended adhesives and tapes.

SD-09 Reports

Moisture Tests; FIO.

Test reports of moisture content of concrete slab stating date of test, person conducting the test, and the area tested.

SD-13 Certificates

Carpet and Accessories; FIO.

Certificates of compliance from a laboratory accredited by the National Laboratory Accreditation Program of the National Institute of Standards and Technology attesting that each type of carpet and cushion material conforms to the standards specified.

SD-14 Samples

Carpet and Accessories; GA.

a. Carpet: Two "Production Quality" samples 675 by 450 mm (27 by 18 inches) of each carpet proposed for use, showing quality, pattern, and color specified.

b. Vinyl or Aluminum Moldings: Two pieces of each type at least 300 mm. (12 inches long.)

SD-19 Operation and Maintenance Manuals

Carpet and Accessories; FIO.

Three copies of carpet manufacturer's maintenance instructions describing recommended type of cleaning equipment and material, spotting and cleaning methods and cleaning cycles.

1.3 DELIVERY AND STORAGE: Materials shall be delivered to the site in the manufacturer's original wrappings and packages clearly labeled with the manufacturer's name, brand name, size, dye lot number, and related information. Materials shall be stored in a clean, dry, well ventilated area, protected from damage and soiling, and maintained at a temperature above 16 degrees C (60 degrees F) for 2 days prior to installation.

1.4 ENVIRONMENTAL REQUIREMENTS: Areas in which carpeting is to be installed shall be maintained at a temperature above 16 degrees C (60 degrees F) for 2 days before installation, during installation, and for 2 days after installation. A minimum temperature of 13 degrees C (55 degrees F) shall be maintained thereafter for the duration of the contract. Traffic or movement of furniture or equipment in carpeted area shall not be permitted for 24 hours after installation. Other work which would damage the carpet shall be completed prior to installation of carpet.

1.5 WARRANTY: Manufacturer's standard performance guarantees or warranties that extend beyond a one-year period shall be provided.

1.6 EXTRA MATERIAL: Extra material from same dye lot consisting of full width continuous broadloom shall be provided for maintenance. A minimum of 5 percent of total square meters (square yards) of each carpet type, pattern, and color shall be provided.

PART 2 PRODUCTS

2.1 CARPET TYPE: Carpet shall be first quality; free of visual blemishes, streaks, poorly dyed areas, and other physical and manufacturing defects. Carpet materials and treatments shall be reasonably nonallergenic and free of other recognized health hazards.

2.1.1 Physical Characteristics Carpet shall comply with the following:

a. Carpet Fabrication: Tufted.

b. Category: Broadloom.

c. Pile Type: Multilevel loop.

d. Pile Fiber: Branded commercial nylon continuous filament with soil hiding/static control.

e. Pile or Wire Height: 4.78 mm. (.188 inch.) minimum.

f. Gauge: 3.54 mm. (1/10 inch.)

g. Stitch count: 4.41 per mm. (11.2 per inch.)

h. Surface Pile Yarn Weight, (or Face Weight): .8 kg per square meter. (28 ounces per square yard.) This does not include weight of backings. Weight of actual surface yarn exposed to wear above carpet backing shall be determined in accordance with ASTM D 418.

i. Pile Density: 5361 as determined using the formula below.

$$\text{Density} = (W)(36)/T$$

W is pile yarn weight in (ounces per square yard,) and T is pile thickness in inches. Pile thickness shall be determined in accordance with ASTM D 418.

j. Dye Method:

Solution dyed - synthetic yarn which is spun from a colored solution with the filament impregnated with the pigment.

k. Backing Materials: Primary backing materials shall be polypropylene. Secondary backing to suit project requirements shall be those customarily used and accepted by the trade for each type of carpet, except when a special unitary back designed for gluedown is provided.

l. Width: 3.6 m (12 feet) minimum usable carpet.

m. Pattern, texture, and color: As indicated.

2.1.2 Performance Requirements:

a. Static Control: Static control shall be provided to permanently control static buildup to less than 3500 volts when tested at 20 percent relative humidity and 21 degrees C (70 degrees F) in accordance with AATCC 134.

b. Flammability and Critical Radiant Flux Requirements: Carpet shall comply with 16 CFR 1630. Carpet in corridors and exits shall have a minimum average critical radiant flux of 0.45 watts per square centimeter when tested in accordance with ASTM E 648.

c. Tuft Bind: Tuft bind shall be a minimum 53N (12 pound) average force for loop when tested in accordance with ASTM D 1335.

d. Delamination Strength: Delamination strength for tufted carpet with a secondary back shall be minimum of 440 N/m (2.5 lb./inch) in accordance with ASTM D 3936.

2.2 ADHESIVES AND CONCRETE PRIMER: Adhesives and concrete primers for installation of carpet shall be waterproof, nonflammable, meet local air-quality standards, and shall be as recommended by the carpet manufacturer. Seam adhesive shall be waterproof, nonflammable, and nonstaining as recommended by the carpet manufacturer. Release adhesive for carpet over trench covers shall be as recommended by the carpet manufacturer.

2.3 MOLDING: Molding shall be aluminum. Aluminum molding shall be a hammered surface, pinless clamp-down type, designed for the type of carpet being installed. Finish shall be natural color anodized. Floor flange shall be a minimum 38 mm (1-1/2 inches) wide and face shall be a minimum 16 mm (5/8 inch) wide.

2.4 TAPE: Tape for seams shall be as recommended by the carpet manufacturer for the type of seam used in installation.

PART 3 EXECUTION

3.1 SURFACE PREPARATION: Carpet shall not be installed on surfaces that are unsuitable and will prevent a proper installation. Holes, cracks, depressions, or rough areas shall be repaired using material recommended by the carpet or adhesive manufacturer. Floor shall be free of any foreign materials and swept broom clean. Before beginning work, subfloor shall be tested with glue and carpet to determine "open time" and bond.

3.2 MOISTURE TEST: Concrete slab shall be tested for moisture content. The moisture content shall not exceed a hygrometer reading of 65 percent.

3.3 INSTALLATION: Installation shall be in accordance with the manufacturer's instructions and CRI 104. Edges of carpet meeting hard surface flooring shall be protected with molding. Installation shall be in accordance with the molding manufacturer's instructions.

3.3.1 Broadloom of Installation

Broadloom carpet shall be installed direct glue down and shall be smooth, uniform, and secure, with a minimum of seams. Seams shall be uniform, unnoticeable, and treated with a seam adhesive. Side seams shall be run toward the light where practical and where such layout does not increase the number of seams. Breadths shall be installed parallel, with carpet pile in the same direction. Patterns shall be accurately matched. Cutouts, as at door jambs, columns and ducts shall be neatly cut and fitted securely. Seams at doorways shall be located parallel to and centered directly under doors. Seams shall not be made perpendicular to doors or at pivot points. Seams at changes in directions of corridors shall follow the wall line parallel to the carpet direction. Corridors with widths less than 1.8 m (6 feet) shall have the carpet laid lengthwise down the corridors.

3.4 CLEANING AND PROTECTION

3.4.1 Cleaning: After installation of the carpet, debris, scraps, and other foreign matter shall be removed. Soiled spots and adhesive shall be removed from the face of the carpet with appropriate spot remover. Protruding face yarn shall be cut off and removed. Carpet shall be vacuumed clean.

3.4.2 Protection: The installed carpet shall be protected from soiling and damage with heavy, reinforced, nonstaining kraft paper, plywood, or hardboard sheets. Edges of kraft paper protection shall be lapped and secured to provide a continuous cover. Traffic shall be restricted for at least 45 hours. Protective covering shall be removed when directed by the Contracting Officer.

3.5 REMNANTS: Remnants remaining from the installation, consisting of scrap pieces more than 600 mm (2 feet) in dimension with more than 0.6 square meters (6 square feet) total, shall be provided. Non-retained scraps shall be removed from site.

-- End of Section --

INDEX

SECTION 09900

PAINTING

Paragraph		Page
1.1	REFERENCES	09900-1
1.2	SUBMITTALS	09900-2
1.3	PACKAGING, LABELING, AND STORING	09900-2
1.4	APPROVAL OF MATERIALS	09900-3
1.5	ENVIRONMENTAL CONDITIONS	09900-3
1.6	SAFETY AND HEALTH	09900-3
2.1	PAINT	09900-3
3.1	PROTECTION OF AREAS NOT TO BE PAINTED	09900-4
3.2	SURFACE PREPARATION	09900-4
3.3	MIXING AND THINNING	09900-5
3.4	APPLICATION	09900-5
3.5	PIPE COLOR CODE MARKING	09900-6
3.6	MISCELLANEOUS PAINTING	09900-7
3.7	SURFACES TO BE PAINTED	09900-8
3.8	SURFACES NOT TO BE PAINTED	09900-8
3.9	CLEANING	09900-8
3.10	PAINTING SCHEDULES	09900-8

SECTION 09900

PAINTING, GENERAL

PART 1 GENERAL

1.1 REFERENCES: The publications listed below form a part of this specification to the extent referenced. The publications are referred to in the text by basic designation only.

AMERICAN CONFERENCE OF GOVERNMENTAL INDUSTRIAL HYGIENISTS (ACGIH)

ACGIH-02	(1991) 1991-1992 Threshold Limit Values for Chemical Substances and Physical Agents and Biological Exposure Indices

AMERICAN SOCIETY FOR TESTING AND MATERIALS (ASTM)

ASTM D 3273	(1986; R 1991) Resistance to Growth of Mold on the Surface of Interior Coating in an Environmental Chamber
ASTM D 3274	(1982; R 1988) Evaluating Degree of Surface Disfigurement of Paint Films by Microbial (Fungal or Algal) Growth or Soil and Dirt Accumulation

COMMERCIAL ITEM DESCRIPTIONS (CID)

CID A-A-1500	(Rev A) Sealer, Surface (Latex Block Filler)

FEDERAL SPECIFICATIONS (FS)

FS TT-C-555	(Rev B; Am 1) Coating, Textured (for Interior and Exterior Masonry Surfaces)
FS TT-E-489	(Rev H) Enamel, Alkyd, Gloss, Low VOC Content
FS TT-E-496	(Rev B; Am 3) Enamel: Heat-Resisting (400 degrees F.), Black
FS TT-E-506	(Rev K; Am 1) Enamel, Alkyd, Gloss, Tints and White (for Interior Use)
FS TT-E-508	(Rev C; Am 1) Enamel, Interior Semigloss, Tints and White
FS TT-E-509	(Rev C) Enamel, Odorless, Alkyd, Interior, Semigloss, White and Tints
FS-TT-E-545	(Rev C) Primer (Enamel-Undercoat, Alkyd, Odorless, Interior, Flat, Tint and White)
FS TT-P-29	(Rev K) Paint, Latex
FS TT-P-30	(Rev E; Am 1) Paint, Alkyd, Odorless, Interior, Flat, White and Tints
FS TT-P-650	(Rev D) Primer Coating, Latex Base, Interior, White (for Gypsum Wallboard, or Plaster)
FS TT-S-001992	(Basic) Stain, Latex, Exterior for Wood Surfaces

FS TT-V-86 (Rev C; Am 1) Varnish, Oil, Rubbing (for Metal and Wood Furniture)

STEEL STRUCTURES PAINTING COUNCIL (SSPC)

SSPC Paint 5 (1991) Zinc Dust, Zinc Oxide and Phenolic Varnish Paint

SSPC Paint 21 (1991) White or Colored Silicone Alkyd Paint

SSPC Paint 25 (1991) Red Iron Oxide, Zinc Oxide, Raw Linseed Oil and Alkyd Primer (without Lead and Chromate Pigments)

SSPC SP 1 (1982) Solvent Cleaning

SSPC SP 2 (1989) Hand Tool Cleaning

SSPC SP 3 (1989) Power Tool Cleaning

SSPC SP 7 (1991) Brush-Off Blast Cleaning

1.2 SUBMITTALS: Government approval is required for submittals with a "GA" designation; submittals having an "FIO" designation are for information only. The following shall be submitted in accordance with Section 01300 SUBMITTAL PROCEDURES:

SD-01 Data

Paint; GA.

The names, quantity represented, and intended use for the proprietary brands of materials proposed to be substituted for the specified materials when the required quantity of a particular batch is 200 L (50 gallons) or less.

SD-06 Instructions

Mixing and Thinning; FIO. Application; FIO.

Manufacturer's current printed product description, material safety data sheets (MSDS) and technical data sheets for each coating system. Detailed mixing, thinning and application instructions, minimum and maximum application temperature, and curing and drying times between coats. Detailed application instructions for textured coatings shall be provided.

SD-13 Certificates

Lead;FIO. Mildewcide and Insecticide; FIO.
Volatile Organic Compound (VOC) Content; FIO.

Certificate stating that paints for interior use contain no mercurial mildewcide or insecticide. Certificate stating that paints proposed for use contain not more than 0.06 percent lead. Certificate stating that paints proposed for use meet the VOC regulations of the local Air Pollution Control Districts having jurisdiction over the geographical area in which the project is located.

1.3 PACKAGING, LABELING, AND STORING: Paints shall be in sealed containers that legibly show the designated name, formula or specification number, batch number, color, quantity, date of manufacture, manufacturer's formulation number, manufacturer's directions including any warnings and special precautions, and name of manufacturer. Pigmented paints shall be furnished in containers not larger than

20 liters. (5 gallons.) Paints and thinner shall be stored in accordance with the manufacturer's written directions and as a minimum stored off the ground, under cover, with sufficient ventilation to prevent the buildup of flammable vapors and at temperatures between 4 and 35 degrees C. (40 and 95 degrees F.) Paints shall be stored on the project site or segregated at the source of supply sufficiently in advance of need to allow 30 days for testing.

1.4 APPROVAL OF MATERIALS: When samples are tested, approval of materials will be based on tests of the samples; otherwise, materials will be approved based on test reports furnished with them. If materials are approved based on test reports furnished, samples will be retained by the Government for testing should the materials appear defective during or after application. In addition to any other remedies under the contract the cost of retesting defective materials will be at the Contractor's expense.

1.5 ENVIRONMENTAL CONDITIONS: Unless otherwise recommended by the paint manufacturer, the ambient temperature shall be between 7 and 35 degrees C (45 and 95 degrees F) when applying coatings other than water-thinned, epoxy, and moisture-curing polyurethane coatings. Water-thinned coatings shall be applied only when ambient temperature is between 10 and 32 degrees C. (50 and 90 degrees F.) Epoxy, and moisture-curing polyurethane coatings shall be applied only within the minimum and maximum temperatures recommended by the coating manufacturer. Moisture-curing polyurethane shall not be applied when the relative humidity is below 30 percent.

1.6 SAFETY AND HEALTH: Work shall comply with applicable Federal, State, and local laws and regulations, and with the ACCIDENT PREVENTION PLAN, including the Activity Hazard Analysis as specified in the CONTRACT CLAUSES. The Activity Hazard Analysis shall include analyses of the potential impact of painting operations on painting personnel and on others involved in and adjacent to the work zone.

1.6.1 Worker Exposures: Exposure of workers to chemical substances shall not exceed limits as established by ACGIH-02, or as required by a more stringent applicable regulation.

1.6.2 Toxic Compounds: Toxic compounds having ineffective physiological properties, such as odor or irritation levels, shall not be used unless approved by the Contracting Officer.

1.6.3 Training: Workers having access to an affected work area shall be informed of the contents of the applicable material data safety sheets (MSDS) and shall be informed of potential health and safety hazard and protective controls associated with materials used on the project. An affected work area is one which may receive mists and odors from the painting operations. Workers involved in preparation, painting and clean-up shall be trained in the safe handling and application, and the exposure limit, for each material which the worker will use in the project. Personnel having a need to use respirators and masks shall be instructed in the use and maintenance of such equipment.

1.6.4 Coordination: Work shall be coordinated to minimize exposure of other Contractor personnel, and visitors to mists and odors from preparation, painting and clean-up operations.

PART 2 PRODUCTS

2.1 PAINT: The term "paint" as used herein includes emulsions, enamels, paints, stains, varnishes, sealers, cement-emulsion filler, and other coatings, whether used as prime, intermediate, or finish coat. Paint shall conform to the respective specifications listed for use in the painting schedules at the end of this section, except that an approved first-line proprietary paint material with similar intended usage and color to that specified may be used. Additional requirements are as follows:

2.1.1 Colors and Tints: Colors shall be as selected from manufacturer's standard colors, as indicated. Manufacturer's standard color is for identification of color only. Stains shall conform in shade to

manufacturer's standard color. The color of the undercoats shall vary slightly from the color of the next coat.

2.1.2 Mildewcide and Insecticide: Paint specified for all coats applied to surfaces in toilet rooms and shower areas shall contain a mildewcide that will not adversely affect the color, texture, or durability of the coating. The mildewcide shall be incorporated into the paint by the manufacturer and shall attain a surface disfigurement rating of 8 or greater when tested in accordance with ASTM D 3273 and evaluated in accordance with ASTM D 3274. Mercurial mildewcide shall not be used in interior paint. Insecticides shall not be used in paint.

2.1.3 Lead: Paints containing lead in excess of 0.06 percent by weight of the total nonvolatile content (calculated as lead metal) shall not be used.

2.1.4 Chromium: Paints containing zinc chromate or strontium chromate pigments shall not be used.

2.1.5 Volatile Organic Compound (VOC) Content: Paints shall comply with applicable state and local laws enacted to insure compliance with Federal Clean Air Standards and shall conform to the restrictions of the local air pollution control authority.

PART 3 EXECUTION

3.1 PROTECTION OF AREAS NOT TO BE PAINTED: Items not to be painted which are in contact with or adjacent to painted surfaces shall be removed or protected prior to surface preparation and painting operations. Items removed prior to painting shall be replaced when painting is completed. Following completion of painting, workmen skilled in the trades involved shall reinstall removed items. Surfaces contaminated by coating materials shall be restored to original condition.

3.2 SURFACE PREPARATION: Surfaces to be painted shall be clean and free of foreign matter before application of paint or surface treatments. Oil and grease shall be removed with clean cloths and cleaning solvents prior to mechanical cleaning. Cleaning solvents shall be of low toxicity with a flashpoint in excess of 38 degrees C. (100 degrees F.) Cleaning shall be programmed so that dust and other contaminants will not fall on wet, newly painted surfaces. Exposed ferrous metals such as nail heads on or in contact with surfaces to be painted with water-thinned paints, shall be spot-primmed with a suitable corrosion-inhibitive primer capable of preventing flash rusting and compatible with the coating specified for the adjacent areas.

3.2.1 Concrete and Masonry Surfaces: Concrete and masonry surfaces shall be allowed to dry at least 30 days before painting. Glaze, efflorescence, laitance, dirt, grease, oil, asphalt, surface deposits of free iron and other foreign matter shall be removed prior to painting.

3.2.2 Ferrous Surfaces: Ferrous surfaces including those that have been shop-coated, shall be solvent-cleaned. Surfaces that contain loose rust, loose mill scale, and other foreign substances shall be cleaned mechanically with hand tools according to SSPC SP 2, power tools according to SSPC SP 3 or by sandblasting according to SSPC SP 7. Shop-coated ferrous surfaces shall be protected from corrosion by treating and touching up corroded areas immediately upon detection.

3.2.3 Nonferrous Metallic Surfaces: Galvanized, lead, and other nonferrous metal surfaces shall be solvent-cleaned in accordance with SSPC SP 1.

3.2.4 Gypsum Board Surfaces: Gypsum board surfaces shall be dry and shall have all loose dirt and dust removed by brushing with a soft brush, rubbing with a cloth, or vacuum-cleaning prior to application of the first-coat material. A damp cloth or sponge may be used if paint will be water-based.

3.2.5 Wood Surfaces: Wood surfaces shall be cleaned of foreign matter.

3.3 MIXING AND THINNING: When thinning is approved as necessary to suit surface, temperature, weather conditions, or application methods, paints may be thinned in accordance with the manufacturer's directions. When thinning is allowed, paints shall be thinned immediately prior to application with not more than 0.5 L (1 pint) of suitable thinner per liter. (gallon.) The use of thinner shall not relieve the Contractor from obtaining complete hiding, full film thickness, or required gloss. Thinning shall not cause the paint to exceed local limits on volatile organic compounds. Paints of different manufacturers shall not be mixed.

3.3.1 Cement-Emulsion Filler Coat: Cement and aggregate shall be dry-mixed so that uniform distribution and intermixing are obtained. Mixing liquid and one-half of the total amount of water shall be premixed and added gradually to the white portland cement and aggregate with constant stirring until a thick, smooth material is obtained. Emulsion paint shall then be added to the mixture and stirred until uniformity is obtained. The blend shall have a thick, creamy consistency. The remainder of the water shall be added if necessary to obtain a material with adequate application properties. Blending resin emulsion or emulsion paint with any other component shall be done with caution; too rapid an agitation will cause air entrapment and foaming.

3.4 APPLICATION: Painting practices shall comply with applicable state and local laws enacted to insure compliance with Federal Clean Air Standards. Unless otherwise specified or recommended by the paint manufacturer, paint may be applied by brush, roller, or spray. At the time of application, paint shall show no signs of deterioration. Uniform suspension of pigments shall be maintained during application. Each coat of paint shall be applied so dry film shall be of uniform thickness and free from runs, drops, ridges, waves, pinholes or other voids, laps, brush marks, and variations in color, texture, and finish. Hiding shall be complete. Rollers for applying paints and enamels shall be of a type designed for the coating to be applied and the surface to be coated. Special attention shall be given to insure that all edges, corners, crevices, welds, and rivets receive a film thickness equal to that of adjacent painted surfaces. Paints, except water-thinned types, shall be applied only to surfaces that are completely free of moisture as determined by sight or touch.

3.4.1 Ventilation: Affected areas shall be ventilated during paint application so that workers exposure to chemical substances shall not exceed limits as established by ACGIH-02, or as required by a more stringent applicable regulation. Interior work zones having a volume of 280 cubic meters (10,000 cubic feet) or less shall be ventilated at a minimum of 2 air exchanges per hour. Ventilation in larger work zones shall be maintained by means of mechanical exhaust. Solvent vapors shall be exhausted outdoors, away from air intakes and workers. Return air inlets in the work zone shall be temporarily sealed before start of work until the coatings have dried.

3.4.2 Respirators: Operators and personnel in the vicinity of operating paint sprayers shall wear respirators.

3.4.3 First Coat: The first coat on gypsum wallboard, and other surfaces shall include repeated touching up of suction spots or overall application of primer or sealer to produce uniform color and gloss. Excess sealer shall be wiped off after each application. The first coat on both faces of wood doors shall be applied at essentially the same time. Glazed doors shall be given the specified coating system within 3 weeks of the time they are glazed, but not before the glazing material has set; paint shall overlay glass about 1.78mm (70 mils) all around. Each varnish coat shall be sanded lightly prior to application of subsequent coats.

3.4.4 Timing: Surfaces that have been cleaned, pretreated, and otherwise prepared for painting shall be given a coat of the specified first coat as soon as practical after such pretreatment has been completed, but prior to any deterioration of the prepared surface. Sufficient time shall elapse between successive coats to permit proper drying. This period shall be modified as necessary to suit weather conditions.

3.4.5 Stains: On exterior wood surfaces, the stain shall be applied at a spreading rate of 4.9 to 6.1 square meters per liter (200 to 250 square feet per gallon) or as recommended by the manufacturer.

3.4.6 Fillers: Masonry surface voids shall be filled; however, surface irregularities need not be completely filled. The dried filler shall be uniform and free of pinholes. Filler shall not be applied over caulking compound.

3.4.6.1 Cement-Emulsion Filler: Immediately before filler application, surfaces shall be dampened uniformly and thoroughly, with no free surface water visible, by several applications of potable water with a fog spray, allowing time between the sprayings for water to be absorbed. Cement-emulsion filler shall be scrubbed into the surface vigorously with a stiff-bristled brush having tampico or palmyra bristles not longer than 63 mm. (2-1/2 inches.) At least 24 hours shall elapse before applying exterior emulsion paint over cement-emulsion filler. When the ambient temperature is over 29 degrees C, (85 degrees F,) cement-emulsion filler surfaces shall be dampened lightly with a fog spray of potable water immediately prior to application of the subsequent paint coat.

3.4.7 Textured Coating: Application of textured coating, FS TT-C-555, shall be as specified in the manufacturer's printed directions at a rate of 1.1 to 1.3 square meters per liter (45 to 55 square feet per gallon) in one coat.

3.4.8 Ferrous-Metal Primer: Primer for ferrous-metal shall be applied to ferrous surfaces to receive paint other than asphalt varnish prior to deterioration of the prepared surface. The semitransparent film applied to some pipes and tubing at the mill is not to be considered a shop coat, but shall be overcoated with the specified ferrous-metal primer prior to application of finish coats.

3.5 PIPE COLOR CODE MARKING: Pipes in exposed areas and in accessible pipe spaces shall be provided with color band and titles adjacent to all valves, except those provided at plumbing fixtures, at not more than 12 meter (40 foot) spacing on straight pipe runs, adjacent to change in direction, and on both sides where pipes pass through walls or floors. Color code marking shall be of the color listed in TABLE I and the size listed in TABLE II. The arrows shall be installed adjacent to each band to indicate the direction of flow in the pipe. The legends shall be printed in upper-case black letters as listed in TABLE I. Letter sizes shall be as listed in TABLE II. Marking shall be painted or applied using colored, pressure-sensitive adhesive markers of standard manufacture. Paint shall be as specified for insulated and uninsulated piping.

TABLE I. COLOR CODES FOR MARKING PIPE

Material	Letters and Band	Arrow*	Legend
Cold water (potable)	Green	White	POTABLE WATER
Fire protection water	Red	White	FIRE PR. WATER
Hot water (domestic)	Green	White	H.W.
Hot water recirculating (domestic)	Green	White	H.W.R.
High temp. water supply	Yellow	Black	H.T.W.S.
High temp. water return	Yellow	Black	H.T.W.R.
Boiler feed water	Yellow	Black	B.F.
Low temp. water supply (heating)	Yellow	Black	L.T.W.S.
Low temp. water return (heating)	Yellow	Black	L.T.W.R.
Condenser water supply	Green	White	COND. W.S.
Condenser water return	Green	White	COND. W.R.
Chilled water supply	Green	White	C.H.W.S.
Chilled water return	Green	White	C.H.W.R.
Gas	Blue	White	PROPANE GAS
Steam	Yellow	Black	STM.
Condensate	Yellow	Black	COND.

TABLE II. COLOR CODE MARKING SIZES

Outside Diameter of Pipe Covering (mm)	Width of Color Band (mm)	Arrow Length x Width (mm)	Size of Legend Letters and Numerals (mm)
Less than 38	200	200 x 57	13
38 to 60	200	200 x 57	19
60 to 150	300	200 x 57	31

TABLE II. COLOR CODE MARKING SIZES

Outside Diameter of Pipe Covering (Inches)	Length of Color Band (inches)	Arrow Length x Width (Inches)	Size of Legend Letters and Numerals (Inches)
Less than 1-1/2	8	8 x 2-1/4	1/2
1-1/2 to 2-3/8	8	8 x 2-1/4	3/4
2-1/2 to 7-7/8	12	8 x 2-1/4	1-1/4

3.6 MISCELLANEOUS PAINTING

3.6.1 Lettering: Lettering shall be provided as scheduled on the drawings, shall be block type, and shall be water-type decalcomania, finished with a protective coating of spar varnish. Samples shall be approved before application.

3.7 SURFACES TO BE PAINTED: Surfaces listed in the painting schedules at the end of this section, other than those listed in paragraph SURFACES NOT TO BE PAINTED, shall be painted as scheduled.

3.8 SURFACES NOT TO BE PAINTED: Surfaces in the following areas are not to be painted: In addition surfaces of hardware, fittings, and other factory finished items shall not be painted.

3.9 CLEANING: Cloths, cotton waste and other debris that might constitute a fire hazard shall be placed in closed metal containers and removed at the end of each day. Upon completion of the work, staging, scaffolding, and containers shall be removed from the site or destroyed in an approved manner. Paint and other deposits on adjacent surfaces shall be removed and the entire job left clean and acceptable.

3.10 PAINTING SCHEDULES: The following painting schedules identify the surfaces to be painted and prescribe the paint to be used and the number of coats of paint to be applied. Contractor options are indicated by ------or------ between optional systems or coats.

EXTERIOR PAINTING SCHEDULE

Surface	First Coat	Second Coat	Third Coat
Concrete masonry units.	Clear masonry sealer (SEE PRODUCTS)	Clear masonry sealer	None
Wood: stain finish.	FS TT-S-001992 Class B	FS TT-S-001992, Class B	None
Ferrous metal unless otherwise specified.	SSPC Paint 25	FS TT-E-489	FS TT-E-489
Ferrous metal: subject to high temperature, up to 204 degrees C (400 degrees F), as follows: Flues	FS TT-E-496, Type II	FS TT-E-496, Type II	None

INTERIOR PAINTING SCHEDULE

Surface	First Coat	Second Coat	Third Coat
Gypsum board, concrete, unless otherwise specified	FS TT-P-29	FS TT-P-29	
	----------or----------		
	FS TT-P-650	FS TT-E-509	

Concrete masonry units requiring a smooth finish	CID A-A-1500	FS TT-P-29	FS TT-P-29
	----------or----------		
	FS TT-P-30	FS TT-P-30	
Concrete: ceilings in following area: vault.	Primer as recommended by FS TT-C-555 manufacturer	FS TT-C-555, Type I	FS TT-P-29
Gypsum board in toilet rooms and showers	FS TT-P-650	FS TT-E-506	None
Ferrous metal unless otherwise specified.	SSPC Paint 25	FS TT-E-545	FS TT-E-508
Ferrous metal factory-primed mechanical and electrical equipment.	FS TT-E-489,	FS TT-E-489,	None
	----------or----------		
	SSPC Paint 21, Type I	SSPC Paint 21, Type I	None
Galvanized: unless otherwise specified.	SSPC Paint 5	Two coats of paint to match adjacent areas	
Wood: handrails.	FS TT-V-86	FS TT-V-86	FS TT-V-86
Metal: Electrical conduit runs, metallic tubing uninsulated ducts and pipes pipe hangers, louvers, grilles, and air outlets in areas having painted adjacent surfaces.	Ferrous metal: SSPC Paint 5	FS TT-E-508 ------or------- FS TT-E-509	

-- End of Section --

INDEX

SECTION 09915

COLOR SCHEDULE

Paragraph		Page
1.1	REFERENCES	09915-1
1.2	GENERAL	09915-1
1.3	SUBMITTALS	09915-1
2.1	REFERENCE TO MANUFACTURER'S COLOR	09915-1
2.2	COLOR SCHEDULE	09915-1

SECTION 09915

COLOR SCHEDULE

PART 1 GENERAL

1.1 REFERENCES: The publications listed below form a part of this specification to the extent referenced. The publications are referred to in the text by basic designation only.

1.2 GENERAL: This section covers only the color of the exterior and interior materials and products that are exposed to view in the finished construction. The word "color" as used herein includes surface color and pattern. Requirements for quality and method of installation are covered in other appropriate sections of the specifications. Specific locations where the various materials are required are shown on the drawings. Items not designated for color in this section may be specified in other sections. When color is not designated for items, the Contractor shall propose a color for approval.

1.3 SUBMITTALS: Government approval is required for submittals with a "GA" designation; submittals having an "FIO" designation are for information only. The following shall be submitted in accordance with Section 01300 SUBMITTAL PROCEDURES:

PART 2 PRODUCTS

2.1 REFERENCE TO MANUFACTURER'S COLOR: Where color is shown as being specific to one manufacturer, an equivalent color by another manufacturer may be submitted for approval. Manufacturers and materials specified are not intended to limit the selection of equal colors from other manufacturers.

2.2 COLOR SCHEDULE: The color schedule lists the colors, patterns and textures required for exterior and interior finishes, including both factory applied and field applied colors.

2.2.1 Exterior Walls: Exterior wall colors shall apply to exterior wall surfaces including recesses at entrances and projecting vestibules. Conduit shall be painted to closely match the adjacent surface color. Wall color shall be provided to match the colors listed below.

a. Concrete Masonry Units (Integrally Colored): Basalite
Color: # D-619

2.2.2 Exterior Trim: Exterior trim shall be provided to match the colors listed below.

a. Doors and Door Frames: To match concrete masonry units

b. Windows (mullion, muntin, sash, trim, and sill): Medium bronze anodized

c. Wood Stain: (Trellis) Color to match concrete masonry units
(Gates) Color to match concrete masonry units

d. Fascia: Smoothflex
Color: Beige

e. Flashings at roof penetrations (pipes & flues): To match roof tile color

f. Facia trim & rain diverters: Natural copper color

g. Soffits: Smoothflex
Color: Beige

h. Sealants: To match concrete masonry color where adjacent to masonry.
To match facia and soffit color at facias and soffits.

2.2.3 Exterior Roof:

a. Roof Tile: Gladding, McBean
Italian Pan
Color: Kiln-run Red

b. Metal: Natural copper color

2.2.4 Interior Floor Finishes: Flooring materials shall be provided to match the colors listed below.

a. Carpet: Lees Commercial Carpet
Style: Sisal Craft
Pattern: DN876
Color: 127 Kentucky Bluegrass

b. Rubber Tile: Burke Industries
Constellation
Color: #6624 - Orion

c. Ceramic Tile: Ceramic Mosaic Tile (Floor) Dal-Tile Corporation
Dal Keystone Unglazed Mosaic 2x2
Color: DK-106 Mottled Dark Gray

d. Grout: Dal-Tile Corporation
Custom Building Products
Standard Series
Polyblend, #9 Natural Gray

2.2.5 Interior Base Finishes: Base materials shall be provided to match the colors listed below.

a. Resilient Base and Edge Strips: Burke Industries
Color: #323P Bluebonnet

b. Ceramic Tile: Dal-Tile Corporation
Dal Permabrite Glazed Tile 2x2
Color: 6414 Gloss Pearl

c. Grout: Dal-Tile Corporation
Custom Building Products
Standard Series
Polyblend, #10 Antique White

2.2.6 Interior Wall Finishes: Interior wall color shall apply to the entire wall surface, including reveals, vertical furred spaces, grilles, diffusers, electrical and access panels, and piping and conduit adjacent to wall surfaces unless otherwise specified. Items not specified in other paragraphs shall be painted to match adjacent wall surface. Wall materials shall be provided to match the colors listed below.

a. Paint: Fed. # 37886 - Snow White

b. Vinyl Wall Covering: (VWC1): Wolf Gordon, Inc.
GOH# 128674

(VWC2): Wolf Gordon, Inc.
GOH# 837024

c. Ceramic Tile: Glazed Wall Tile (GWT1) Dal-Tile Corporation
Dal Permabrite Glazed Tile 2x2
Color: 6414 Gloss Pearl

Glazed Wall Tile (GWT2) (Accent) Dal Tile Corporation
Dal Permabrite Glazed Tile 2x2
Color: 6429 Gloss Blue

d. Ceramic Tile Grout: Dal-Tile Corporation
Custom Building Products
Standard Series
Polyblend, #10 Antique White

2.2.7 Interior Ceiling Finishes: Ceiling colors shall apply to ceiling surfaces including soffits, furred down areas, grilles, diffusers, registers, and access panels. Ceiling color shall also apply to joist, underside of roof deck, and conduit and piping where joists and deck are exposed and required to be painted. Ceiling materials shall be provided to match the colors listed below.

a. Acoustical Tile and Grid: Ultima RH90 Beveled Tegular Lay-In, White

b. Paint: Fed # 37886 - Snow White, Semi-gloss

2.2.8 Interior Trim: Interior trim shall be provided to match the colors listed below.

a. Doors: Fed # 37886 - Snow White, Semi-gloss.

b. Door Frames: Fed # 37886 - Snow White, Semi-gloss.

c. Windows (mullion, sash): Medium bronze anodized

d. Fire Extinguisher Cabinets: Fed # 37886 - Snow White, Semi-gloss.

2.2.9 Interior Miscellaneous: Miscellaneous items shall be provided to match the colors listed below.

a. Toilet Partitions and Urinal Screen: Sanymetal
Color: Sanyacrylic, #71 Gray

PART 3 EXECUTION (Not Applicable)

-- End of Section --

INDEX

SECTION 09950

WALL COVERINGS

Paragraph		Page
1.1	REFERENCES	09950-1
1.2	SUBMITTALS	09950-1
1.3	DELIVERY AND STORAGE	09950-1
1.4	ENVIRONMENTAL REQUIREMENTS	09950-1
1.5	EXTRA MATERIALS	09950-1
2.1	WALL COVERINGS	09950-2
2.2	PRIMER AND ADHESIVE	09950-2
3.1	SURFACE PREPARATION	09950-2
3.2	INSTALLATION	09950-2
3.3	CLEAN-UP	09950-2

SECTION 09950

WALL COVERINGS

PART 1 GENERAL

1.1 REFERENCES: The publications listed below form a part of this specification to the extent referenced. The publications are referred to in the text by basic designation only.

FEDERAL SPECIFICATIONS (FS)

FS CCC-W-408 (Rev D) Wall Covering, Vinyl-Coated

1.2 SUBMITTALS: Government approval is required for submittals with a "GA" designation; submittals having an "FIO" designation are for information only. The following shall be submitted in accordance with Section 01300 SUBMITTAL PROCEDURES:

SD-01 Data

Wall Covering and Accessories; GA.

Manufacturer's descriptive data.

SD-06 Instructions

Installation; FIO.

Installation instructions for wall covering and accessories.

Maintenance; FIO.

Cleaning and maintenance instructions for wall covering and accessories.

SD-14 Samples

Wall Covering and Accessories; GA.

Three samples of each indicated type, pattern, and color of wall covering required. Samples of wall covering shall be minimum 125 mm by 175 mm (5 inches by 7 inches) and of sufficient size to show pattern repeat.

1.3 DELIVERY AND STORAGE: Materials shall be delivered to the building site in original unopened containers. Materials shall be stored in accordance with the manufacturer's instructions in a clean dry area with temperature maintained above 16 degrees C. (60 degrees F.)

1.4 ENVIRONMENTAL REQUIREMENTS: Areas to receive wall covering shall be maintained at a temperature above 16 degrees C (60 degrees F) for 3 days before, during, and 3 days after application.

1.5 EXTRA MATERIALS: One lineal foot of full-width wall covering for each 3 linear meters (10 lineal feet) of wall covering installed shall be furnished. The wall covering shall be from the same lot as that installed.

PART 2 PRODUCTS

2.1 WALL COVERINGS: Wall coverings shall be manufacturer's standard material designed specifically for the specified use.

2.1.1 Vinyl Wall Covering Type : Vinyl wall covering shall be a vinyl coated woven or nonwoven fabric with mildew and germicidal additives and shall conform to FS CCC-W-408, Type II, (0.445 to 0.815 kg (13.1 to 24 ounces) total weight per square meter (yard) and width of 137 cm. (54 inches.) Pattern and color of vinyl wall covering shall be as selected from manufacturer's standard colorways and patterns as shown.

2.2 PRIMER AND ADHESIVE: Primer and adhesive shall be mildew resistant and of a type recommended by the wall covering manufacturer.

PART 3 EXECUTION

3.1 SURFACE PREPARATION: Wall covering shall not be applied to surfaces that are rough, that contain stains that will bleed through the wall covering, or that are otherwise unsuitable for proper installation. Cracks and holes shall be filled and rough spots shall be sanded smooth. Surfaces to receive wall covering shall be thoroughly dry. Surface of walls shall be primed as required by manufacturer's instructions to permit ultimate removal of wall covering from the wall surface. Primer shall be allowed to completely dry before adhesive application.

3.2 INSTALLATION

3.2.1 Vinyl Wall Covering: Wall covering shall be installed in accordance with the manufacturer's installation instructions. Glue and adhesive spillage shall be immediately removed from wall covering face and seams with a remover recommended by the manufacturer.

3.3 CLEAN-UP: Upon completion of the work, wall covering shall be left clean and free of dirt or soiling.

-- End of Section --

INDEX

SECTION 10160

TOILET PARTITIONS

Paragraph		Page
1.1	REFERENCES	10160-1
1.2	SYSTEM DESCRIPTION	10160-1
1.3	SUBMITTALS	10160-1
1.4	DELIVERY, STORAGE AND HANDLING	10160-1
1.5	WARRANTY	10160-2
2.1	TOILET ENCLOSURES	10160-2
2.2	URINAL SCREENS	10160-2
2.3	HARDWARE	10160-2
2.4	COLORS	10160-2
3.1	INSTALLATION	10160-2
3.2	ADJUSTING AND CLEANING	10160-2

SECTION 10160

TOILET PARTITIONS

PART 1 GENERAL

1.1 REFERENCES: The publications listed below form a part of this specification to the extent referenced. The publications are referred to in the text by basic designation only.

CODE OF FEDERAL REGULATIONS (CFR)

CFR 28 Part 36 Americans with Disabilities Act Accessibility Guidelines

FEDERAL SPECIFICATIONS (FS)

FS RR-P-1352 (Rev C) Partitions, Toilet, Complete

FEDERAL STANDARDS (FED-STD)

FED-STD 795 (Basic) Uniform Federal Accessibility Standards

1.2 SYSTEM DESCRIPTION: Toilet partition system, including toilet enclosures, and urinal screens, shall be a complete and usable system of panels, hardware, and support components. The partition system shall be provided by a single manufacturer and shall be a standard product as shown in the most recent catalog data. The partition system shall comply with FED-STD 795 and CFR 28 Part 36 for areas as shown.

1.3 SUBMITTALS: Government approval is required for submittals with a "GA" designation; submittals having an "FIO" designation are for information only. The following shall be submitted in accordance with Section 01300 SUBMITTAL PROCEDURES:

SD-01 Data

Toilet Partition System; GA

Manufacturer's technical data and catalog cuts including installation and cleaning instructions.

SD-04 Drawings

Toilet Partition System; GA

Drawings showing plans, elevations, details of construction, hardware, reinforcing, fittings, mountings, and anchorings.

SD-14 Samples

Toilet Partition System; GA

Manufacturer's standard color charts and color samples.

1.4 DELIVERY, STORAGE, AND HANDLING: Components shall be delivered to the jobsite in the manufacturer's original packaging with the brand, item identification, and project reference clearly marked. Components shall be stored in a dry location that is adequately ventilated and free from dust, water, or other contaminants and shall have easy access for inspection and handling.

1.5 WARRANTY: Manufacturer's standard performance guarantees or warranties that extend beyond a 1 year period shall be provided.

PART 2 PRODUCTS

2.1 TOILET ENCLOSURES: Toilet enclosures shall conform to FS RR-P-1352, Type I, B. Width, length and height of toilet enclosures shall be as shown. Finish surface of panels shall be baked enamel finish 1. Panels indicated to receive toilet paper holders or grab bars as specified in Section 10800 TOILET ACCESSORIES shall be reinforced for the reception of the items required. Grab bars shall comply with FED-STD 795 and CFR 28 Part 36.

2.2 URINAL SCREENS: Urinal screens shall conform to FS RR-P-1352, Type III, Style [A] [D]. Finish surface of screens shall be baked enamel finish 1. Width and height of urinal screens shall be as shown.

2.3 HARDWARE: Hardware for the toilet partition system shall conform to FS RR-P-1352 for the specified type and style of partitions. Hardware finish shall be highly resistant to alkalies, urine, and other common toilet room acids.

2.4 COLORS: Color of finishes for toilet partition system components shall be as specified in Section 09915 COLOR SCHEDULE.

PART 3 EXECUTION

3.1 INSTALLATION: Toilet partitions shall be installed straight and plumb in accordance with approved manufacturer's instructions with horizontal lines level and rigidly anchored to the supporting construction. Where indicated, anchorage to walls shall be by through-bolting . Drilling and cutting for installation of anchors shall be at locations that will be concealed in the finished work.

3.2 ADJUSTING AND CLEANING: Doors shall have a uniform vertical edge clearance of approximately 5 mm (3/16 inch) and shall rest open at approximately 30 degrees when unlatched. Baked enamel finish shall be touched up with the same color of paint that was used for the finish. Toilet partitions shall be cleaned in accordance with approved manufacturer's instructions and shall be protected from damage until accepted.

-- End of Section --

INDEX

SECTION 10440

INTERIOR SIGNAGE

Paragraph		Page
1.1	REFERENCES	10440-1
1.2	GENERAL	10440-1
1.3	SUBMITTALS	10440-1
1.4	DELIVERY AND STORAGE	10440-2
1.5	EXTRA STOCK	10440-2
2.1	COLORS	10440-2
2.2	PLAQUE SIGNS	10440-2
2.3	GRAPHICS	10440-2
2.4	FASTENERS	10440-2
3.1	INSTALLATION	10440-2

SECTION 10440

INTERIOR SIGNAGE

PART 1 GENERAL

1.1 REFERENCES: The publications listed below form a part of this specification to the extent referenced. The publications are referred to in the text by basic designation only.

AMERICAN NATIONAL STANDARDS INSTITUTE (ANSI)

ANSI Z97.1	(1984) Safety Glazing Materials Used in Buildings

CODE OF FEDERAL REGULATIONS (CFR)

36 CFR 1191	Americans with Disabilities Act (ADA) Accessibility Guidelines for Buildings and Facilities

FEDERAL STANDARDS (FED-STD)

FED-STD 795	(Basic) Uniform Federal Accessibility Standards

1.2 GENERAL: Interior signage shall be of the sizes and types shown on the drawings, shall conform to the requirements specified herein, and shall be provided at the locations indicated. Signs shall be complete with lettering, framing as detailed, and related components for a complete installation. Signs shall be the standard product of a manufacturer regularly engaged in the manufacture of such products and shall essentially duplicate signs that have been in satisfactory use at least 2 years prior to bid opening.

1.3 SUBMITTALS: Government approval is required for submittals with a "GA" designation; submittals having an "FIO" designation are for information only. The following shall be submitted in accordance with Section 01300 SUBMITTAL PROCEDURES:

SD-01 Data

Interior Signage; GA.

Manufacturer's descriptive data, catalogs cuts, installation and cleaning instructions.

SD-04 Drawings

Interior Signage; FIO.

Drawings showing elevations of each type of sign, dimensions, details and methods of mounting or anchoring, shape and thickness of materials, and details of construction. A schedule showing the location of each sign type shall be included.

SD-14 Samples

Interior Signage; FIO.

One sample of each of the following sign types showing typical quality and workmanship. The samples may be installed in the work, provided each sample is identified and location recorded.

a. Door sign.

Two samples of manufacturer's standard color chips for each material requiring color selection.

1.4 DELIVERY AND STORAGE: Materials shall be delivered to the jobsite in manufacturer's original packaging and stored in a clean, dry area.

1.5 EXTRA STOCK: The Contractor shall provide extra stock of the following: 4 blank plaques of each color and size for sign types. 4 sets pressure-sensitive letters in each color and size.

PART 2 PRODUCTS

2.1 COLOR: Color shall be in accordance with Section 09915 COLOR SCHEDULE.

2.2 PLAQUE SIGNS: Plaque signs shall be a modular type signage system. Signs shall be fabricated of acrylic plastic conforming to ANSI Z97.1.

2.2.1 Standard Modular Plaque Signs: Plaque signs shall consist of matte finish acrylic plastic, thickness and size as shown. Frames shall be molded acrylic. Corners of signs shall be 13 mm 1/2 inch radius.

2.2.2 Surface mounted signs shall be provided with 1.6 mm (1/16 inch) thick vinyl foam tape. Sign inserts shall be provided with 1.6 mm (1/16 inch) thick foam tape.

2.3 GRAPHICS

2.3.1 Tactile Graphics: Signage that provides permanent general circulation directions, or identification of spaces shall be tactile (perceptible to touch) and shall comply with 36 CFR 1191. The 36 CFR 1191 requirements must provide equal or greater accessibility than the requirements of FED-STD 795. Characters, symbols, or pictographs on tactile signs shall meet 36 CFR 1191 Grade 2 braile. Characters and symbols shall contrast with their background.

2.3.2 Graphics Application: Signage graphics shall conform to the following:

a. Tactile characters and symbols shall be raised 0.8 mm (1/32 inch) minimum from the sign face. Signs shall be of one piece construction. Add-on characters are not acceptable.

2.3.3 Messages: See drawings and schedule for message content, Typeface: Helvetica medium. Type size as indicated.

2.4 FASTENERS: Exposed anchor and fastener materials shall be compatible with metal to which applied and shall have matching color and finish. Foam tape pads shall be minimum 1.5 mm (1/16 inch) thick closed cell vinyl foam with adhesive backing. Adhesive shall be transparent, long aging, high tech formulation on two sides of the vinyl foam. Adhesive surfaces shall be protected with a 5 mil green flatstock treated with silicone. Foam pads shall be sized for the signage as per signage manufacturers recommendations.

PART 3 EXECUTION

3.1 INSTALLATION: Signs shall be installed in accordance with approved manufacturer's instructions at locations shown on the drawings. Signs shall be installed plumb and true at mounting heights indicated, and by method shown or specified. Signs on surfaces shall not be installed until finishes on such surfaces have been installed.

3.1.1 Protection and Cleaning: The work shall be protected against damage during construction. Sign surfaces shall be cleaned in accordance with the manufacturer's approved instructions.

-- End of Section --

INDEX

SECTION 10800

TOILET ACCESSORIES

Paragraph		Page
1.1	REFERENCES	10800-1
1.2	SUBMITTALS	10800-1
1.3	DELIVERY AND STORAGE	10800-1
2.1	MANUFACTURED UNITS	10800-1
2.2	ACCESSORY ITEMS	10800-2
3.1	INSTALLATION	10800-3
3.2	SCHEDULE	10800-3

SECTION 10800

TOILET ACCESSORIES

PART 1 GENERAL

1.1 REFERENCES: The publications listed below form a part of this specification to the extent referenced. The publications are referred to in the text by basic designation only.

FEDERAL SPECIFICATIONS (FS)

FS DD-M-411	(Rev C) Mirrors, Glass
FS WW-P-541/GEN	(Rev E; Am 1) Plumbing Fixtures
FS WW-P-541/8	(Rev B; Am 1) Plumbing Fixtures (Accessories, Land Use)

1.2 SUBMITTALS: Government approval is required for submittals with a "GA" designation, submittals having an "FIO" designation are for information only. The following shall be submitted in accordance with Section 01300 SUBMITTAL PROCEDURES:

SD-01 Data

Finishes; GA. Accessory Items; GA.

Manufacturer's descriptive data and catalog cuts indicating materials of construction, fasteners proposed for use for each type of wall construction, mounting instructions, and operation instructions.

SD-14 Samples

Finishes; GA. Accessory Items; GA.

One sample of each accessory proposed for use. Approved samples may be incorporated into the finished work, provided they are identified and their locations noted.

1.3 DELIVERY, STORAGE, AND HANDLING: Toilet accessories shall be wrapped for shipment and storage, delivered to the job site in manufacturer's original packaging and stored in a clean, dry area protected from construction damage and vandalism.

PART 2 PRODUCTS

2.1 MANUFACTURED UNITS: Toilet accessories shall be provided where indicated in accordance with paragraph SCHEDULE. Each accessory item shall be complete with the necessary mounting plates, shall be of sturdy construction with corrosion resistant surface.

2.1.1 Anchors and Fasteners: Anchors and fasteners shall be capable of developing a restraining force commensurate with the strength of the accessory to be mounted and shall be suited for use with the supporting construction. Exposed fasteners shall have oval heads and shall be finished to match the accessory.

2.1.2 Finishes: Finishes on metal shall be provided as follows:

Metal	Finish
Stainless steel	No. 4 satin finish
Carbon steel, copper alloy, and brass	Chromium plated, bright

2.2 ACCESSORY ITEMS: Accessory items shall conform to the requirements specified below.

2.2.1 Grab Bar (GB): Grab bar shall conform to FS WW-P-541/GEN and FS WW-P-541/8, Type IV, Class 2, 32 mm (1-1/4 inches) OD stainless steel. Grab bar shall be form and length as indicated. Concealed mounting flange shall have set screw mounting holes concealed on the lip of the flange. Grab bar shall have a smooth finish. Installed bars shall be capable of withstanding a 2.225 kN (500 pound) vertical load without coming loose from the fastenings and without obvious permanent deformation.

2.2.2 Mirror, Glass (MG):Glass mirror shall conform to FS DD-M-411, Class 2, Style E Grade 2.

2.2.3 Combination Paper Towel Dispenser/Waste Receptacle Units (PTDWR): Dispenser/receptacle shall be semi-recessed and shall have a capacity of 600 sheets of C-fold, single-fold, or quarter-fold towel. Waste receptacle shall be designed to be locked in unit and removable for service. Locking mechanism shall be tumbler key lock. Waste receptacle shall have a capacity of 12 gallons. Unit shall be fabricated of not less than 0.8 mm (0.30 inch) stainless steel welded construction with all exposed surfaces having a satin finish. Waste receptacle that accepts reusable liner standard for unit manufacturer shall be provided.

2.2.4 Sanitary Napkin and Tampon Disposer (SND): Sanitary napkin and tampon disposal shall be constructed of Type 304 stainless steel disposable liner type and shall conform to FS WW-P-541/GEN and FS WW-P-541/8, Type I, Class 3, Style S (surface mounted). Fifty disposable liners of the type standard with the manufacturer shall be provided.

2.2.5 Sanitary Napkin and Tampon Dispenser (SNTD) with Door: Sanitary napkin and tampon dispenser shall conform to FS WW-P-541/GEN and FS WW-P-541/8, Type I, Class 5, recessed. Dispenser, including door shall be Type 304 stainless steel and shall have a capacity of 15 napkins or 20 tampons. Dispensing mechanism shall be for coin operation. Coin mechanisms shall be field changeable by adjusting pins for new coin designation. Coin mechanisms shall have minimum denominations of 10 cents and 25 cents.

2.2.6 Soap Dispenser (SD): Soap dispenser shall be lavatory mounted, liquid type consisting of a polyethylene tank with a minimum 0.94 L (32 fluid ounces) holding capacity and a 100 mm (4 inch) spout length.

2.2.7 Shelf, Metal, Heavy Duty (SMHD): Heavy duty metal shelf shall conform to FS WW-P-541/GEN and FS WW-P-541/8, Type V, Class 2, stainless steel with hemmed edges. Separate supports shall be stainless steel.

2.2.8 Soap and Grab Bar Combination, Recessed (SGR): Soap and grab bar combination shall conform to FS WW-P-541/GEN or FS WW-P-541/8, Type IV, Class 3, Type 304 stainless steel, except unit shall be recessed type.

2.2.9 Towel Pin (TP): Towel pin shall have concealed wall fastenings, and a pin integral with or permanently fastened to wall flange. Maximum projection shall be 100 mm (4 inches). Design shall be consistent with design of other accessory items.

2.2.10 Toilet Tissue Dispenser (TTD): Toilet tissue holder shall be Type II - surface mounted with two rolls of tissue stacked vertically. Cabinet shall be stainless steel, satin finish.

PART 3 EXECUTION

3.1 INSTALLATION: Toilet accessories shall be securely fastened to the supporting construction in accordance with the manufacturer's approved instructions. Accessories shall be protected from damage from the time of installation until acceptance.

3.2 SCHEDULE:

Accessories Required

Room or Space	GB	MG	PTDWR	SDN	SNTD	SD	SMHD	SGR	TP	TTD
103	2	3	1	-	-	1	-	-	-	2
104	-	-	-	-	-	-	-	1	2	-
105	-	-	-	-	-	-	-	1	2	-
106	2	2	1	2	1	1	-	-	-	2
118	-	-	-	-	-	-	1	-	-	-

-- End of Section --

INDEX

SECTION 12540

WINDOW BLINDS

Paragraph		Page
1.1	REFERENCES	12540-1
1.2	GENERAL	12540-1
1.3	SUBMITTALS	12540-1
1.4	DELIVERY AND STORAGE	12540-2
2.1	WINDOW BLINDS	12540-2
3.1	WINDOW COVERING PLACEMENT SCHEDULE	12540-2
3.2	INSTALLATION	12540-2

SECTION 12540

WINDOW BLINDS

PART 1 GENERAL

1.1 REFERENCES: The publications listed below form a part of this specification to the extent referenced. The publications are referred to in the text by basic designation only.

FEDERAL SPECIFICATIONS (FS)

FS AA-V-00200 (Rev B) Venetian Blinds

NATIONAL FIRE PROTECTION (NFPA)

NFPA 701 (1989) Methods of Fire Test for Flame-Resistant Textiles and Films

1.2 GENERAL: Horizontal blinds and Drapery hardware shall be provided as indicated, complete with necessary brackets, fittings, and hardware. Each window covering type utilized shall be a complete unit produced by one manufacturer. Window coverings shall be provided in accordance with paragraph WINDOW COVERING PLACEMENT SCHEDULE. Equipment shall be mounted as indicated and shall be manually operated. Windows to receive a covering shall be completely covered. The Contractor shall take measurements at the building and shall be responsible for the proper fitting and hanging of the equipment. Color shall be as specified in Section 09915.

1.3 SUBMITTALS: Government approval is required for submittals with a "GA" designation; submittals having an "FIO" designation are for information only. The following shall be submitted in accordance with Section 01300 SUBMITTAL PROCEDURES:

SD-01 Data

Window Coverings and Hardware; GA.

Manufacturer's data composed of catalog cuts, brochures, and product information.

SD-04 Drawings

Window Coverings and Hardware; GA.

Drawings showing fabrication and installation details. The manufacturer's descriptive data will be acceptable, provided this literature accurately shows the items proposed to be furnished and the method of installation. Drawings shall show layout of blinds, lengths and mounting details.

SD-14 Samples

Window Coverings and Hardware; GA.

Three samples of each type and color of window covering specified.

SD-19 Operations and Maintenance Manuals

Window Coverings and Hardware; FIO

Maintenance instructions for window coverings.

1.4 DELIVERY AND STORAGE: The Contractor shall be responsible for the receipt, storage, and handling of materials and supplies necessary to provide a complete installation. Window coverings shall be delivered to the project site in the manufacturer's original unopened containers. Materials shall be stored flat in a clean dry area with temperature maintained above 10 degrees C. (50 degrees F.)

PART 2 PRODUCTS

2.1 WINDOW BLINDS: Each blind, including hardware, accessory items, mounting brackets and fastenings, shall be provided as a complete unit produced by one manufacturer. All parts shall be one color and match the color of the blind slat as indicated on color Schedule. Steel features shall be treated for corrosion resistance.

2.1.1 Horizontal Blinds: Horizontal blinds shall conform to FS AA-V-00200, Type II (25.4 mm (1 inch) slats), except as modified below. Blind units shall be capable of nominally 180 degree partial tilting operation and full-height raising. Blinds shall be inside mount. Tapes for Type I slats shall be longitudinal reinforced vinyl plastic in 1-piece turn ladder construction.

2.1.1.1 Head Channel and Slats: Head channel shall be steel not less than 0.61 mm (0.024) for Type II. Slats shall be aluminum, not less than 0.203 mm (0.0080 inch) thick, and of sufficient strength to prevent sag or bow in the finished blind. A sufficient amount of slats shall be provided to assure proper control, uniform spacing, and adequate overlap.

2.1.1.2 Controls: The slats shall be tilted by a transparent tilting wand, hung vertically by its own weight, and shall swivel for easy operation. The tilter control shall be of enclosed construction. All moving parts and mechanical drive shall be made of compatible materials which do not require lubrication during normal expected life. The tilter shall tilt the slats to any desired angle and hold them at that angle so that any vibration or movement of ladders and slats will not drive the tilter and change the angle of slats. A mechanism shall be included to prevent over tightening. The wand shall be of sufficient length to reach to within 1500 mm (5 feet) of the floor.

PART 3 EXECUTION

3.1 WINDOW COVERING PLACEMENT SCHEDULE: Window covering shall be provided at all exterior windows.

3.2 INSTALLATION: Installation shall be in accordance with the approved detail drawings and manufacturer's installation instructions. Units shall be level, plumb, secure, and at proper height and location relative to window units. The Contractor shall furnish and install supplementary or miscellaneous items in total, including clips, brackets, or anchorages incidental to or necessary for a sound, secure, and complete installation. Installation shall not be initiated until completion of room painting and finishing operations. Upon completion of the installation, window coverings shall be adjusted for form and appearance, in proper operating condition, and free from damage or blemishes. Damaged units shall be repaired or replaced by the Contractor as directed by the Contracting Officer.

-- End of Section --

INDEX

SECTION 13080

SEISMIC PROTECTION FOR MECHANICAL, ELECTRICAL EQUIPMENT

Paragraph		Page
1.1	REFERENCES	13080-1
1.2	SYSTEM DESCRIPTION	13080-2
1.3	SUBMITTALS	13080-3
2.1	MATERIALS AND EQUIPMENT	13080-3
3.1	BRACING AND COUPLING	13080-4
3.2	BUILDING DRIFT	13080-4
3.3	FLEXIBLE COUPLINGS OR JOINTS	13080-4
3.4	PIPE SLEEVES	13080-5
3.5	SPREADERS	13080-5
3.6	ANCHOR BOLTS	13080-5
3.7	RESILIENT VIBRATION ISOLATION DEVICES	13080-6
3.8	SWAY BRACES FOR PIPING	13080-7
3.9	SWAY BRACES FOR DUCTS	13080-9
3.10	SWAY BRACES FOR CONDUIT	13080-9
3.11	EMERGENCY GAS SUPPLY CONNECTIONS	13080-9
3.12	EQUIPMENT SWAY BRACING	13080-9
3.13	MISCELLANEOUS EQUIPMENT	13080-10
3.14	LIGHTING FIXTURES IN BUILDINGS	13080-10
3.15	SUSPENDED CEILING ASSEMBLIES	13080-11

SECTION 13080

SEISMIC PROTECTION FOR MECHANICAL, ELECTRICAL EQUIPMENT

PART 1 GENERAL

1.1 REFERENCES: The publications listed below form a part of this specification to the extent referenced. The publications are referred to in the text by basic designation only.

AMERICAN SOCIETY FOR TESTING AND MATERIALS (ASTM)

ASTM A 36	(1994a) Carbon Structural Steel
ASTM A 307	(1994) Carbon Steel Bolts and Studs, 60,000 PSI Tensile Strength
ASTM A 325	(1994) Structural Bolts, Steel, Heat Treated, 120/105 ksi Minimum Tensile Strength
ASTM A 446	(1993) Steel Sheet, Zinc-Coated (Galvanized) by the Hot-Dip Process for Storm Sewer and Drainage Pipe
ASTM A 500	(1993) Cold-Formed Welded and Seamless Carbon Steel Structural Tubing in Rounds and Shapes
ASTM A 501	(1993) Hot-Formed Welded and Seamless Carbon Steel Structural Tubing
ASTM A 576	(1990b) Steel Bars, Carbon, Hot-Wrought, Special Quality
ASTM A 603	(1988) Zinc-Coated Steel Structural Wire Rope
ASTM E 488	(1990) Strength of Anchors in Concrete and Masonry Elements
ASTM E 580	(1991) Application of Ceiling Suspension Systems for Acoustical Tile and Lay-In Panels in Areas Requiring Seismic Restraint

AMERICAN SOCIETY OF MECHANICAL ENGINEERS (ASME)

ASME B18.2.1	(1981; Supple 1991; R 1992) Square and Hex Bolts and Screws (Inch Series)
ASME B18.2.2	(1987; R 1993) Square and Hex Nuts (Inch Series)

INTERNATIONAL CONFERENCE OF BUILDING OFFICIALS (ICBO)

ICBO-01	(1994) Uniform Building Code

SHEET METAL & AIR CONDITIONING CONTRACTORS' NATIONAL ASSOCIATION (SMACNA)

SMACNA-12	(1991; Appx E, 1993) Seismic Restraint Manual Guidelines for Mechanical Systems

UNDERWRITERS LABORATORIES (UL)

UL 1570 (1988; Rev thru Mar 1995) Fluorescent Lighting Fixtures

UL 1571 (1991; Rev thru Mar 1995) Incandescent Lighting Fixtures

1.2 SYSTEM DESCRIPTION

1.2.1 General: The requirements for seismic protection measures described in this section shall be applied to mechanical/electrical equipment and systems specified herein. Seismic protection requirements shall be in accordance with ICBO-01 using an importance factor of 1.0 and shall be provided in addition to any other requirements called for in other sections of these specifications. This facility shall be designed as being in seismic zone 4; no other zone values shall be used to establish bracing requirements. Lateral support against earthquake induced forces shall be accomplished by positive attachments without consideration of friction resulting from gravity loads.

1.2.2 Mechanical/Electrical Equipment: Mechanical/electrical equipment shall include the following items to the extent required on the drawings or in other sections of these specifications:

Boilers and furnaces	Storage Tanks for Propane
Water Heaters	Water and Gas Piping
Expansion Air Separator Tanks	Cable Trays
Control Panels	Air and Refrigerant Compressors
Pumps with Motors	Air Handling Units
Light Fixtures	Ducts
Motor Control Centers	Transformers
Switchboards (Floor Mounted)	Exhaust and Return Fans
Suspended Ceiling Assemblies	

1.2.3 Mechanical/Electrical Systems: The following mechanical and electrical systems shall be installed as required on the drawings and other sections of these specifications and shall be seismically protected in accordance with this specification:

All Piping Inside the Building in Accordance With This Specification
All Ductwork Systems
Gas Distribution Systems
All Water Supply Systems
Outside Heat Distribution, Return, and Condensate Systems

1.2.4 Equipment and Systems: The bracing for the following mechanical/electrical equipment and systems shall be developed by the Contractor in accordance with the requirements of this specification:

Expansion Tank
Boiler
Air Handlers

1.2.5 Pipes and Ducts Requiring No Special Seismic Restraints: Seismic restraints may be omitted from the following installations:

a. Gas piping less than 25 mm (1 inch) inside diameter.

b. Piping in boiler and mechanical equipment rooms less than 32 mm (1-1/4 inches) inside diameter.

c. All other piping less than 38 mm (1-1/2 inches) inside diameter.

d. Electrical conduit less than 64 mm (2-1/2 inches) inches inside diameter.

e. Rectangular air handling ducts less than 0.37 square meters (4 square feet) in cross sectional area.

f. Round air handling ducts less than 457 mm (18 inches) in diameter.

g. Piping suspended by individual hangers 300 mm (12 inches) or less in length from the top of pipe to the bottom of the supporting structural member where the hanger is attached, except as noted below.

h. Ducts suspended by hangers 300 mm (12 inches) or less in length from the top of the duct to the bottom of the supporting structural member, except as noted below.

In exemptions g. and h. all hangers shall meet the length requirements. If the length requirement is exceeded by one hanger in the run, the entire run shall be braced.

1.2.6 All Other Interior Piping, Conduit, and Ducts: Interior piping, conduit, and ducts not covered by paragraphs Exclusion or Pipes and Ducts Requiring No special Seismic Restraints shall be seismically protected in accordance with the provisions herein.

1.3 SUBMITTALS: Government approval is required for submittals with a "GA" designation; submittals having an "FIO" designation are for information only. The following shall be submitted in accordance with Section 01300 SUBMITTAL PROCEDURES:

SD-01 Data

GA. Bracing and Coupling; GA. Lighting Fixtures in Buildings; GA. Miscellaneous Equipment; GA.

Copies of the design calculations with the detail drawings. Calculations shall be stamped by a registered engineer and shall verify the capability of structural members to which bracing is attached for carrying the load from the brace.

SD-04 Drawings

Bracing and Coupling; GA. Flexible Couplings or Joints; FIO. Resilient Vibration Isolation Devices; FIO. Lighting Fixtures in Buildings; GA. Miscellaneous Equipment; GA.

Detail drawings along with catalog cuts, templates, and erection and installation details, as appropriate, for the items listed. Submittals shall be complete in detail; shall indicate thickness, type, grade, class of metal, and dimensions; and shall show construction details, reinforcement, anchorage, and installation with relation to the building construction.

PART 2 PRODUCTS

2.1 MATERIALS AND EQUIPMENT: Materials and equipment shall conform to the requirements specified below:

2.1.1 Bolts and Nuts: Squarehead and hexhead bolts, and heavy hexagon nuts, ASME B18.2.1, ASME B18.2.2, and ASTM A 307 or ASTM A 576. Bolts and nuts used underground and/or exposed to weather shall be galvanized in accordance with ASTM A 325.

2.1.2 Sway Bracing: Material used for members listed in this section and on the drawings, shall be structural steel conforming with the following:

a. Plates, rods, and rolled shapes, ASTM A 36.

b. Wire rope, ASTM A 603.

c. Tubes, ASTM A 501.

d. Pipes, ASTM A 500.

e. Light gauge angles, less than 6 mm (1/4 inch) thickness, ASTM A 446.

2.1.3 Flexible Couplings: Flexible couplings shall have same pressure and temperature ratings as adjoining pipe.

2.1.3.1 Flexible Mechanical Joints

a. Mechanical couplings for steel or cast iron pipe shall be of the sleeve type and shall provide a tight flexible joint under all reasonable conditions, such as pipe movement caused by expansion, contraction, slight settling or shifting of the ground, minor variations in trench gradients, and traffic vibrations. Where permitted in other sections of these specifications, joints utilizing split-half couplings with grooved or shouldered pipe ends may be used.

b. Sleeve-type couplings shall be used for joining plain-end pipe sections. The coupling shall consist of one steel middle ring, two steel followers, two gaskets, and necessary steel bolts and nuts to compress the gaskets. Underground bolts shall be high-strength type as specified above.

2.1.4 Lighting Fixture Supports: Fixture supports shall be malleable iron. Lighting fixtures and supports shall conform to UL 1570 or UL 1571 as applicable.

PART 3 EXECUTION

3.1 BRACING AND COUPLING: Bracing and coupling shall conform to the arrangements shown. Provisions of this paragraph apply to all piping within a 5 foot line around outside of building unless buried in the ground. Piping grouped for support on trapeze-type hangers shall be braced at the same intervals as determined by the smallest diameter pipe of the group. No trapeze-type hanger shall be secured with less than two 1/2 inch bolts. Bracing rigidly attached to pipe flanges, or similar, shall not be used where it would interfere with thermal expansion of piping.

3.2 BUILDING DRIFT: Sway braces for a run shall not be attached to two dissimilar structural elements of a building that may respond differentially during an earthquake unless a flexible joint is provided. Joints capable of accommodating seismic displacements shall be provided where pipes pass through a building seismic or expansion joint, or where rigidly supported pipes connect to equipment with vibration isolators. For threaded piping, swing joints shall be provided.

3.3 FLEXIBLE COUPLINGS OR JOINTS

3.3.1 Building Piping: Flexible couplings or joints in building piping shall be provided at bottom of all pipe risers larger than 90 mm (3-1/2 inches) inches in diameter. Flexible couplings or joints shall be braced laterally without interfering with the action of the flexible coupling or joint. Cast iron waste and vent piping need only comply with these provisions when caulked joints are used. Flexible bell and spigot pipe joints using rubber gaskets or no-hub fittings may be used at each branch adjacent to tees and elbows for underground waste piping inside of building to comply with these requirements.

3.3.2 Underground Piping: Underground piping and 100 mm (4 inch) or larger conduit, except heat distribution system, shall have flexible couplings installed where the piping enters the building. The

couplings shall accommodate 5/64 inches of relative movement between the pipe and the building in any direction. Additional flexible couplings shall be provided where shown on the drawings.

3.4 PIPE SLEEVES: Pipe sleeves in interior non-fire rated walls shall be sized as indicated on the drawings to provide clearances that will permit differential movement of piping without the piping striking the pipe sleeve.

3.5 SPREADERS: Spreaders shall be provided between adjacent piping runs to prevent contact during seismic activity whenever pipe or insulated pipe surfaces are less than 4 inches apart. Spreaders shall be applied at same interval as sway braces at an equal distance between the sway braces. If rack type hangers are used where the pipes are restrained from contact by mounting to the rack, spreaders are not required for pipes mounted in the rack. Spreaders shall be applied to surface of bare pipe and over insulation on insulated pipes utilizing high-density inserts and pipe protection shields in accordance with the requirements of Section 15250 THERMAL INSULATION FOR MECHANICAL SYSTEMS.

3.6 ANCHOR BOLTS

3.6.1 Cast-In-Place: Floor or pad mounted equipment shall use cast-in-place anchor bolts, except as specified below. Two nuts shall be provided on each bolt. Anchor bolts shall conform to the following tabulation for the various equipment weights and specified seismic zone or the manufacturer's installation recommendations, whichever is the most stringent, unless otherwise shown on the drawings. Anchor bolts that exceed the normal depth of equipment foundation piers or pads shall either extend into concrete floor or the foundation shall be increased in depth to accommodate bolt lengths.

3.6.2 Minimum Bolt Sizes, Cast-In-Place Anchor Bolts

Max. Equip. Weight	Minimum Bolt Sizes (mm)*				
Kg	Zone 4	Zone 3	Zone 2A	Zone 2B	Zone 1
225	13	13	13	13	13
450	13	13	13	13	13
2250	13	13	13	13	13
4500	13	13	13	13	13
9000	13	13	13	13	13
13500	16	13	13	13	13
22500	22	16	13	13	13
45000	**	**	16	22	13

Max. Equip. Weight	Minimum Bolt Sizes (Inches)*				
(Pounds)	Zone 4	Zone 3	Zone 2A	Zone 2B	Zone 1
500		1/2	1/2	1/2	1/2 1/2
1,000	1/2 1/2	1/2	1/2	1/2	
5,000	1/2 1/2	1/2	1/2	1/2	
10,000	1/2 1/2	1/2	1/2	1/2	
20,000	1/2 1/2	1/2	1/2	1/2	
30,000	5/8 1/2	1/2	1/2	1/2	
50,000	7/8 5/8	1/2	1/2	1/2	
100,000	** **	5/8	7/8	1/2	

*Based on four bolts per item, a minimum embedment of 12 bolt diameters, a minimum bolt spacing of 16 bolt diameters and a minimum edge distance of 12 bolt diameters. Equivalent total cross-sectional area shall be used when more than four bolts per item are provided. Anchor bolts shall conform to ASTM A

307. Anchor bolts shall have an embedded straight length equal to at least 12 times nominal diameter of the bolt.

**Equipment weighing more than 22,500 kg (50,000) lb in Zones 3 and 4 shall have at least six bolts per item.

3.6.3 Expansion or Chemically Bonded Anchors: Expansion or chemically bonded anchors shall not be used unless test data in accordance with ASTM E 488 has been provided to verify the adequacy of the specific anchor and application. The expansion anchor size shall be not less than that required in paragraph Minimum Bolt Sizes, Cast-In-Place Anchor Bolts. Expansion and chemically bonded anchors shall be installed in accordance with the manufacturer's recommendations. The allowable forces shall be adjusted for the spacing between anchor bolts and the distance between the anchor bolt and the nearest edge, as specified by the manufacturer.

3.6.3.1 General Testing: Expansion and chemically bonded anchors shall be tested in place after installation. The tests shall occur not more than 24 hours after installation of the anchor and shall be conducted by an independent testing agency; testing shall be performed on random anchor bolts as described below.

3.6.3.2 Torque Wrench Testing: Torque wrench testing shall be done on not less than 50 percent of the total installed expansion anchors and at least one anchor for every piece of equipment containing more than two anchors. The test torque shall equal the minimum required installation torque as required by the bolt manufacturer. Torque wrenches shall be calibrated at the beginning of each day the torque tests are performed. Torque wrenches shall be recalibrated for each bolt diameter whenever tests are run on bolts of various diameters. The applied torque shall be between 20 and 100 percent of wrench capacity. The test torque shall be reached within one half turn of the nut, except for 9 mm (3/8 inch) sleeve anchors which shall reach their torque by one quarter turn of the nut. If any anchor fails the test, similar anchors not previously tested shall be tested until 20 consecutive anchors pass. Failed anchors shall be retightened and retested to the specified torque; if the anchor still fails the test it shall be replaced.

3.6.3.3 Pullout Testing: Expansion and chemically bonded anchors shall be tested by applying a pullout load using a hydraulic ram attached to the anchor bolt. At least 5 percent of the anchors, but not less than three per day shall be tested. The load shall be applied to the anchor without removing the nut; when that is not possible, the nut shall be removed and a threaded coupler shall be installed of the same tightness as the original nut. The test setup shall be checked to verify that the anchor is not restrained from withdrawing by the baseplate, the test fixture, or any other fixtures. The support for the testing apparatus shall be at least 1.5 times the embedment length away from the bolt being tested. Each tested anchor shall be loaded to 1 times the design tension value for the anchor. The anchor shall have no observable movement at the test load. If any anchor fails the test, similar anchors not previously tested shall be tested until 20 consecutive anchors pass. Failed anchors shall be retightened and retested to the specified load; if the anchor still fails the test it shall be replaced.

3.7 RESILIENT VIBRATION ISOLATION DEVICES: Selection of anchor bolts for vibration isolation devices and/or snubbers for equipment base and foundations shall follow the same procedure as in paragraph ANCHOR BOLTS except that an equipment weight equal to five times the actual equipment weight shall be used.

3.7.1 Resilient and Spring-Type Vibration Devices: Vibration isolation devices shall be selected so that the maximum movement of equipment from the static deflection point shall be 15 mm (0.5 inches).

3.7.2 Multidirectional Seismic Snubbers: Multidirectional seismic snubbers employing elastomeric pads shall be installed on all floor- or slab-mounted equipment. These snubbers shall provide 6 mm (0.25 inches) free vertical and horizontal movement from the static deflection point. Snubber medium shall

consist of multiple pads of cotton duct and neoprene or other suitable materials arranged around a flanged steel trunnion so both horizontal and vertical forces are resisted by the snubber medium.

3.8 SWAY BRACES FOR PIPING: Sway braces shall be provided to prevent movement of the pipes under seismic loading. Braces shall be provided in both the longitudinal and transverse directions, relative to the axis of the pipe. The bracing shall not interfere with thermal expansion requirements for the pipes as described in other sections of these specifications.

3.8.1 Transverse Sway Bracing: Transverse sway bracing for steel and copper pipe shall be provided at intervals not to exceed those given in the tabulation below as modified for each seismic zone. All runs shall have a minimum of two transverse braces. Transverse sway bracing for pipes of materials other than steel and copper shall be provided at intervals not to exceed the hanger spacing as specified in Section 15400 PLUMBING, GENERAL PURPOSE.

3.8.2 Maximum Span for Transverse Sway Braces in Seismic Zone 4

Pipe Diameter (mm)	Std. Wgt. Steel Pipe - 40S *L(m)	** F(kN)	Ex. Strong Steel Pipe - 80S *L(m)	**F(kN)	Copper Tube Type L *L(m)	**F(kN)
25	6.7	0.30	6.7	0.4	3.4	0.08
40	7.6	0.60	7.9	0.8	3.7	0.16
50	8.8	1.0	9.1	1.3	4.3	0.30
65	9.8	1.7	10.0	2.1	4.8	0.50
80	10.4	2.5	10.7	3.2	5.2	0.70
90	11.0	3.3	11.6	4.1	5.5	1.0
100	11.9	4.3	12.2	5.3	5.8	1.3
125	12.5	6.4	13.4	8.5	6.1	2.1
150	13.7	9.4	14.0	12.2	6.7	3.3
200	14.9	16.6	16.5	22.9	7.9	6.9
250	16.5	27.1	18.0	34.1	8.5	1.7
300	17.7	38.1	18.6	46.0	9.4	17.6

Pipe Diameter (in.)	Std. Wgt. Steel Pipe - 40S *L(ft.)	**F(lbs.)	Ex. Strong Steel Pipe - 80S *L(ft.)	**F(lbs.)	Copper Tube Type L *L(ft.)	**F(lbs.)
1	22	70	22	80	11	17
1-1/2	25	140	26	180	12	35
2	29	220	30	290	14	70
2-1/2	32	380	33	460	15	110
3	34	550	35	710	17	150
3-1/2	36	730	38	930	18	220
4	39	960	40	1,200	19	300
5	41	1,440	44	1,900	20	470
6	45	2,120	46	2,750	22	730
8	49	3,740	54	5,150	26	1,550
10	54	6,080	59	7,670	28	2,630
12	58	8,560	61	10,350	31	3,950

*L = Maximum span between lateral supports multiplied by 1.1 for Zone 3, 1.25 for Zone 2A, 1.2 for Zone 2B, or 1.35 for Zone 1.

**F = Horizontal force on the brace multiplied by 0.8 for Zone 3, 0.5 for Zone 2A, 0.6 for Zone 2B, or 0.3 for Zone 1.

NOTE: Bracing shall consist of at least one vertical angle 50 x 50 mm x 16 gauge (2in x 2in x 16in gauge) and one diagonal angle of the same size.

3.8.3 Longitudinal Sway Bracing: Longitudinal sway bracing shall be provided at 12 m (40 foot) intervals except when the location of sway braces is shown on the drawings for the particular piping system. All runs shall have one longitudinal brace minimum. Sway braces shall be constructed in accordance with the drawings. Branch lines, walls, or floors shall not be used as sway braces.

3.8.4 Vertical Runs: Vertical runs of piping shall be braced at not more than 3 m (10 foot) vertical intervals. For tubing, bracing shall be provided at no more than 1.2 m (4 foot) spacing. Vertical braces shall be above the center of gravity of the span being braced. All sway braces shall be constructed in accordance with the drawings. Branch lines, walls, or floors shall not be used as sway braces.

3.8.5 Anchor Rods, Angles, and Bars: Anchor rods, angles, and bars shall be bolted to either pipe clamps or pipe flanges at one end and cast-in-place concrete or masonry insert or clip angles bolted to the steel structure on the other end. Rods shall be solid metal or pipe as specified below. Anchor rods, angles, and bars shall not exceed lengths given in the tabulation below.

3.8.6 Maximum Length for Anchor Braces

Type	Size (millimeters)	Maximum length* (meters)	Allowable Loads* (kilonewtons)
Angles	38 x 38 x 6	1.5	25.5
	50 x 50 x 6	2.0	34.5
	64 x 38 x 6	2.5	43.5
	75 x 64 x 6	2.5	48.0
	75 x 75 x 6	3.0	53.0
Rods	91	1.0	16.5
	22	1.0	22.0
Flat Bars	38 x 6	0.4	14.0
	50 x 6	0.4	18.0
	50 x 10	0.5	28.5
Pipes (40s)	25	2.0	18.0
	32	2.8	24.5
	40	3.2	29.5
	50	4.0	39.5

Type	Size (Inches)	Maximum length* (Feet/Inches)	Allowable Loads* (kips)
Angles	1-1/2 x 1-1/2 x 1/4	4-10	5.7
	2 x 2 x 1/4	6-6	7.8
	2-1/2 x 1-1/2 x 1/4	8-0	9.8
	3 x 2-1/2 x 1/4	8-10	10.8
	3 x 3 x 1/4	9-10	11.9
Rods	3/4	3-1	3.7
	7/8	3-8	5.0
Flat Bars	1-1/2 x 1/4	1-2	3.1
	2 x 1/4	1-2	4.1
	2 x 3/8	1-9	6.2
Pipes (40S)	1	7-0	4.1
	1-1/4	9-0	5.5
	1-1/2	10-4	6.6
	2	13-1	8.9

*Based on the slenderness ratio of l/r = 200 and ASTM A 36 steel, where l is the length of the brace and r is the least radius of gyration of the brace.

3.8.7 Clamps and Hangers: Clamps or hangers on uninsulated pipes shall be applied directly to pipe. Insulated piping shall have clamps or hangers applied over insulation in accordance with Section 15250 THERMAL INSULATION FOR MECHANICAL SYSTEMS.

3.8.8 Bolts: Bolts used for attachment of anchors to pipe and structure shall be not less than 13 mm (1/2 inch) diameter.

3.9 SWAY BRACES FOR DUCTS

3.9.1 Braced Ducts: Bracing details and spacing for rectangular and round ducts shall be in accordance with SMACNA-12, including Appendix E, using Seismic Hazard Level 4 and connection level 4.

3.9.2 Unbraced Ducts: Hangers for unbraced ducts shall be positively attached to the duct within 50 mm (2 inches) of the top of the duct with a minimum of two #10 sheet metal screws. Unbraced ducts shall be installed with a 150 mm (6 inch) minimum clearance to vertical ceiling hanger wires.

3.10 SWAY BRACES FOR CONDUIT: Conduit shall be braced as for an equivalent weight pipe.

3.11 EQUIPMENT SWAY BRACING

3.11.1 Suspended Equipment: Equipment sway bracing shall be provided for items supported from overhead floor or roof structures. Braces shall consist of angles, rods, wire rope, bars, or pipes arranged as shown and secured at both ends with not less than 13 mm (1/2 inch). Braces shall conform to paragraph Maximum Length for Anchor Braces. Sufficient braces shall be provided for equipment to resist a horizontal force equal to 1.50 times the weight of equipment without exceeding safe working stress of bracing components. Details of equipment bracing shall be submitted for approval. In lieu of bracing with vertical supports, these items may be supported with hangers inclined at 45 degrees directed up and radially away from equipment and oriented symmetrically in 90-degree intervals on the horizontal

plane, bisecting the angles of each corner of the equipment, provided that supporting members are properly sized to support operating weight of equipment when hangers are inclined at a 45-degree angle.

3.12.2 Floor or Pad Mounted Equipment

3.12.2.1 Shear Resistance: Floor mounted equipment shall be bolted to the floor. Requirements for the number and installation of bolts to resist shear forces shall be in accordance with paragraph ANCHOR BOLTS.

3.12.2.2 Overturning Resistance: The ratio of the height of the equipment (measured from the base to the center of gravity of the equipment) to the minimum distance between anchor bolts shall be used to determine if overturning forces need to be considered in the sizing of anchor bolts. If this ratio is greater than 3.33 the bolt values in paragraph Minimum Bolt Sizes, Cast-In-Place Anchor Bolts shall not be used and calculations shall be provided to verify the adequacy of the anchor bolts for combined shear and overturning.

3.13 MISCELLANEOUS EQUIPMENT

3.13.1 Rigidly Mounted Equipment: The following specific items of equipment to be furnished under this contract shall be constructed and assembled to withstand a horizontal lateral force of 0.30 times the operating weight of the equipment, at vertical center of gravity of the equipment without causing permanent deformation, dislocations, separation of components, or other damage, which would render the equipment inoperative for significant periods of time following an earthquake.

<u>Rigidly Mounted Equipment</u>
- Boilers
- Air-Handling Units
- Substations
- Transformers
- Switch Boards and Switch Gears
- Motor Control Centers
- Free Standing Electric Motors
- Surge Tanks

3.13.2 Nonrigid or Flexibly-Mounted Equipment: The following specific items of equipment to be furnished shall be constructed and assembled to resist a horizontal lateral force of 1.5 times the operating weight of the equipment at the vertical center of gravity of the equipment.

3.14 LIGHTING FIXTURES IN BUILDINGS: Lighting fixtures and supports shall conform to the following:

3.14.1 Pendant Fixtures: Loop and hook or swivel hanger assemblies for pendant fixtures shall be fitted with a restraining device to hold the stem in the support position during earthquake motions. Pendant-supported fluorescent fixtures shall also be provided with a flexible hanger device at the attachment to the fixture channel to preclude breaking of the support. The motion of swivels or hinged joints shall not cause sharp bends in conductors or damage to insulation.

3.14.2 Recessed Fluorescent Fixtures: Recessed fluorescent individual or continuous-row mounted fixtures shall be supported by a seismic-resistant suspended ceiling support system and shall be fastened thereto at each corner of the fixture with bolts or approved clips; or shall be provided with fixture support wires attached to the building structural members using two wires for individual fixtures, attached to opposite corners, and one wire per unit of continuous row mounted fixtures. Each wire support shall be capable of supporting four times the weight of the fixture. Recessed lighting fixtures not over 25 kg (56 pounds) in weight and suspended or pendant-hung fixtures not over 10 kg (20 pounds) in weight may be

supported by and attached directly to the ceiling system runners by a positive attachment such as screws or bolts, number and size as required by design seismic zone. Fixture accessories, including louvers, diffusers, and lenses shall have lock or screw attachments.

3.14.3 Assembly Mounted on Outlet Box: A supporting assembly that is intended to be mounted on an outlet box shall be designed to accommodate mounting features on 100 mm (4 inch) boxes, 75 mm (3 inch) plaster rings, and fixture studs.

3.14.4 Surface-Mounted Fluorescent Fixtures: Surface-mounted fluorescent individual or continuous-row fixtures shall be attached to a seismic-resistant ceiling support system. Fixture support devices for attaching to suspended ceilings shall be a locking-type scissor clamp or a full loop band that will securely attach to the ceiling support. Fixtures attached to underside of a structural slab shall be properly anchored to the slab at each corner of the fixture.

3.14.5 Wall-Mounted Emergency Light Unit: Each wall-mounted emergency light unit shall be secured to remain in place during a seismic disturbance.

3.14.6 Lateral Force: Light fixture bracing shall be designed to resist a lateral force of 1.50 times the fixture weight.

3.15 SUSPENDED CEILING ASSEMBLIES: The structural members of ceiling support systems, used primarily to support acoustical tile panels or acoustical panel lay-in tiles, with or without lighting fixtures, ceiling-mounted air terminals, and ceiling-mounted services, shall conform to the following:

3.15.1 Design Loads: The main runners and cross-runners and their splices and intersection connections shall be designed for two times the design load or ultimate axial tension or compression (minimum 550 N (120 pounds). The connections at the splices and intersections shall be of a mechanical interlocking type that cannot easily be disengaged. Ceiling structural systems shall be designed to withstand required vertical load as well as a lateral force of 23 percent of the ceiling weight. The ceiling weight shall include all lighting fixtures and other equipment that are laterally supported by the ceiling and shall be not less than 200 Pa (4.0 psf). Exception: Ceiling areas of 13 square meters 144 square feet or less surrounded by walls that connect directly to the structure above will be exempt from the lateral-load standards of this specification.

3.15.2 Installation Requirements: Installation requirements shall be in accordance with ASTM E 580 except as follows:

3.15.2.1 Vertical Support: Hanger wires supporting a maximum tributary ceiling area of 1.5 square meters 16 square feet shall be a minimum of 10 gauge in diameter. The size of wires supporting a tributary ceiling area greater than 1.5 square meters 16 square feet shall be substantiated by design calculations. Hanger attachment devices used in ceiling systems not exceeding 200 Pa 4 psf shall be capable of supporting a minimum allowable load of 1.3 kN (300 pounds). Hanger attachment devices used in ceiling systems exceeding 200 Pa 4 psf shall be capable of supporting the design load and shall be substantiated by design calculations. If hangers must be splayed more than one horizontal to six vertical, the resulting horizontal force shall be offset by bracing or counter-splaying, and substantiated by design calculations.

3.15.2.2 Lateral Support: In lieu of the design criteria stated above, where ceiling loads do not exceed 200 Pa, 4 psf, lateral support for the ceiling system may be provided by four galvanized wires of minimum No. 12 gauge, as indicated in ASTM E 580, paragraph 4.4.6.

3.15.3 Lighting Fixture and Air Diffuser Supports: Lighting fixture and air diffuser supports shall be designed and installed to meet the requirements of equipment supports in the preceding paragraphs of this specification with the following exceptions:

a. Recessed lighting fixtures not over 56 pounds in weight and suspended and pendent-hung fixtures not over 20 pounds in weight may be supported and attached directly to the ceiling system runners by a positive attachment such as screws or bolts.

b. Air diffusers that weigh not more than 20 pounds and that receive no tributary loading from ductwork may be positively attached to and supported by the ceiling runners.

-- End of Section --

INDEX

SECTION 15250

THERMAL INSULATION FOR MECHANICAL SYSTEMS

Paragraph		Page
1.1	REFERENCES	15250-1
1.2	SYSTEM DESCRIPTION	15250-2
1.3	GENERAL QUALITY CONTROL	15250-2
1.4	SUBMITTALS	15250-3
1.5	STORAGE	15250-4
2.1	GENERAL MATERIALS	15250-4
2.2	PIPE INSULATION MATERIALS	15250-6
2.3	DUCT INSULATION MATERIALS	15250-7
2.4	EQUIPMENT INSULATION MATERIALS	15250-7
3.1	APPLICATION - GENERAL	15250-7
3.2	PIPE INSULATION INSTALLATION	15250-8
3.3	DUCT INSULATION INSTALLATION	15250-14
3.4	EQUIPMENT INSULATION INSTALLATION	15250-16

SECTION 15250

THERMAL INSULATION FOR MECHANICAL SYSTEMS

PART 1 GENERAL

1.1 REFERENCES: The publications listed below form a part of this specification to the extent referenced. The publications are referred to in the text by basic designation only.

AMERICAN SOCIETY FOR TESTING AND MATERIALS (ASTM)

ASTM A 167	(1993) Stainless and Heat-Resisting Chromium-Nickel Steel Plate, Sheet, and Strip
ASTM A 580	(1993) Stainless and Heat Resisting Steel Wire
ASTM B 209	(1992a) Aluminum and Aluminum-Alloy Sheet and Plate
ASTM C 195	(1990) Mineral Thermal Insulating and Cement
ASTM C 449	(1988) Mineral Fiber Hydraulic-Setting Thermal Insulating and Finishing Cement
ASTM C 533	(1985; R 1990) Calcium Silicate Block and Pipe Thermal Insulation
ASTM C 534	(1994) Preformed Flexible Elastomeric Cellular Thermal Insulation in Sheet and Tubular Form
ASTM C 547	(1977; R 1993) Mineral Fiber Preformed Pipe Insulation
ASTM C 552	(1991) Cellular Glass Thermal Insulation
ASTM C 553	(1992) Mineral Fiber Blanket Thermal Insulation for Commercial and Industrial Applications
ASTM C 612	(1993) Mineral Fiber Block and Board Thermal Insulation
ASTM C 795	(1992) Thermal Insulation for Use in Contact With Austenitic Stainless Steel
ASTM C 647	(1989a) Properties and Tests of Mastics and Coating Finishes for Thermal Insulation
ASTM C 916	(1985; Rev 1990) Adhesives for Duct Thermal Insulation
ASTM C 920	(1987) Elastomeric Joint Sealants
ASTM C 921	(1989) Determining the Properties of Jacketing Materials for Thermal Insulation
ASTM D 3278	(1989) Test Methods for Flash Point of Liquids by Setaflash Closed-Cup Apparatus
ASTM E 84	(1994) Surface Burning Characteristics of Building Materials

ASTM E 96 (1994) Water Vapor Transmission of Materials

FEDERAL SPECIFICATIONS (FS)

FS L-P-535 (Rev E; Notice 2) Plastic Sheet (Sheeting): Plastic Strip: Poly(Vinyl Chloride) and Poly(Vinyl Chloride-Vinyl Acetate), Rigid

MANUFACTURERS STANDARDIZATION SOCIETY OF THE VALVE AND FITTINGS INDUSTRY (MSS)

MSS SP-69 (1991) Pipe Hangers and Supports - Selection and Application

MIDWEST INSULATION CONTRACTORS ASSOCIATION (MICA)

MICA-01 (1993) National Commercial & Industrial Insulation Standards

NATIONAL FIRE PROTECTION ASSOCIATION (NFPA)

NFPA 90A (1993) Installation of Air Conditioning and Ventilating Systems

UNDERWRITERS LABORATORIES (UL)

UL 723 (1993; Rev Apr 1994) Test for Surface Burning Characteristics of Building Materials

1.2 SYSTEM DESCRIPTION: Field-applied insulation and accessories on mechanical systems shall be as specified herein; factory-applied insulation is specified under the piping, duct or equipment to be insulated. Field applied insulation materials required for use on Government-furnished items as listed in the SPECIAL CLAUSES shall be furnished and installed by the Contractor.

1.3 GENERAL QUALITY CONTROL

1.3.1 Standard Products: Materials shall be the standard products of manufacturers regularly engaged in the manufacture of such products and shall essentially duplicate items that have been in satisfactory use for at least 2 years prior to bid opening.

1.3.2 Installer's Qualifications: Qualified installers shall have successfully completed three or more similar type jobs within the last 5 years.

1.3.3 Surface Burning Characteristics: Unless otherwise specified, insulation not covered with a jacket shall have a flame spread rating no higher than 75 and a smoke developed rating no higher than 150. The outside surface of insulation systems which are located in air plenums, in ceiling spaces, and in attic spaces shall have a flame spread rating no higher than 25 and a smoke developed rating no higher than 50. Insulation materials located exterior to the building perimeter are not required to be fire-rated. Flame spread and smoke developed ratings shall be determined by ASTM E 84. Insulation shall be tested in the same density and installed thickness as the material that shall be used in the actual construction. Jackets shall comply with the flame spread and smoke developed ratings required by ASTM C 921.

1.3.4 Identification of Materials: Packages or standard containers of insulation, jacket material, cements, adhesives, and coatings delivered for use, and samples required for approval shall have manufacturer's stamp or label attached giving the name of the manufacturer and brand, and a description of the material.

1.4 SUBMITTALS: Government approval is required for submittals with a "GA" designation; submittals having an "FIO" designation are for information only. The following shall be submitted in accordance with Section 01300 SUBMITTAL PROCEDURES:

SD-01 Data

Thermal Insulation Materials; GA.

A complete list of materials, including manufacturer's descriptive and technical literature, performance data, catalog cuts, and installation instructions. Materials furnished under this section of the specification shall be submitted at one time. A schedule indicating the product number, k-value, thickness and furnished accessories for each mechanical system requiring insulation shall be included.

SD-14 Samples

Thermal Insulation Materials; FIO.

A display of insulated sections as specified in this section, after approval of materials and prior to insulating any piping or ductwork. Each material used shall be identified, by indicating on an attached sheet the specification requirement for the material and the material by each manufacturer intended to meet the requirement. Display sample sections will be inspected at the jobsite by the Contracting Officer. Approved display sample sections shall remain on display at the jobsite during the construction period. Upon completion of construction, the display sample sections will be returned to the Contractor.

Pipe Insulation Display Sections: Display sample sections shall include as a minimum an elbow or tee, a valve, dielectric unions and flanges, a hanger with protection shield and insulation insert, or dowel as required, at support point, method of fastening and sealing insulation at longitudinal lap, circumferential lap, butt joints at fittings and on pipe runs, and terminating points for each type of pipe insulation used on the job, and for hot pipelines and cold pipelines, both interior and exterior, even when the same type of insulation is used for these services.

Duct Insulation Display Sections: Display sample sections for rigid and flexible duct insulation used on the job.

SD-18 Records

Thermal Insulation Materials; FIO.

Three copies of a booklet indicating the types of insulation by referencing MICA-01, at the jobsite. After approval of materials and prior to insulating any equipment, a booklet shall be prepared and submitted for approval which contains marked-up MICA-01 plates or detail drawings showing the insulation material and insulating system for each type of equipment which is required to be insulated per paragraph EQUIPMENT INSULATION INSTALLATION. The MICA plates shall be marked-up showing the materials to be installed in accordance with the requirements of this specification for the specific insulation application. The Contractor shall submit all MICA Plates required to show the entire insulating system, including Plates required to show insulation penetrations, vessel bottom and top heads, legs, and skirt insulation as applicable. If the Contractor elects to submit detailed drawings instead of marked-up MICA Plates, the detail drawings shall show cut-away, section views, and details indicating each component of the insulation system and showing provisions for insulating jacketing, and sealing portions of the equipment. The drawings shall be labeled with a description of each material type with materials and insulating systems, in accordance with this specification. Each material and insulating system that is used shall be identified by indicating the specification requirement for the material, and the material by each manufacturer that is intended to meet the requirement. Three copies of the booklet shall

be submitted at the jobsite to the Contracting Officer. One copy of the approved booklet shall remain with the display sample and two copies shall be provided for Government use.

1.5 STORAGE: Materials shall be delivered in the manufacturer's unopened containers. Materials delivered and placed in storage shall be provided with protection from weather, humidity, dirt, dust and other contaminants by the Contractor. Insulation material and supplies that become dirty, dusty, wet, or otherwise contaminated may be rejected by the Contracting Officer.

PART 2 PRODUCTS

2.1 GENERAL MATERIALS: Materials shall be compatible and shall not contribute to corrosion, soften, or otherwise attack surfaces to which applied in either the wet or dry state. Materials to be used on stainless steel surfaces shall meet ASTM C 795 requirements. Materials shall be asbestos free and conform to the following:

2.1.1 Adhesives

2.1.1.1 Acoustical Lining Insulation Adhesive: Insulation shall be applied in cut-to-size pieces attached to the interior of the duct with a nonflammable, fire-resistant adhesive conforming to ASTM C 916, Type I, NFPA 90A, UL 723, and ASTM E 84. Exposed edges of the liner at the duct ends and at other joints where the lining will be subject to erosion shall be coated with a heavy brush coat of the nonflammable, fire-resistant adhesive to prevent delamination of glass fibers.

2.1.1.2 Mineral Fiber Insulation Cement: Cement shall be in accordance with ASTM C 195.

2.1.1.3 Contact Adhesive: Adhesive shall be Type II, Class 1.

2.1.1.4 Lagging Adhesive: Lagging adhesives shall be nonflammable, fire-resistant in accordance with NFPA 90A, UL 723, and ASTM E 84. Adhesives shall be either the Class 1 or Class 2 type. Class 1 adhesive shall be pigmented white and be suitable for bonding fibrous glass cloth to faced and unfaced fibrous glass insulation board; for bonding cotton brattice cloth to faced and unfaced fibrous glass insulation board; for sealing edges of and bounding fibrous glass tape to joints of fibrous glass board; or for bonding lagging cloth to thermal insulation. Class 2 adhesive shall be pigmented white and be suitable for attaching fibrous glass insulation to metal surfaces. Lagging adhesives shall be applied in strict accordance with the manufacturer's recommendations.

2.1.2 Contact Adhesive: Adhesive may be dispersed in a nonhalogenated organic solvent with a low flash point (flash point plus or minus 3.9 degrees C (25 degrees F) or, dispersed in a nonflammable organic solvent which shall not have a fire point below 93.3 degrees C (200 degrees F). The adhesive shall not adversely affect, initially or in service, the insulation to which it is applied, nor shall it cause any corrosive effect on metal to which it is applied. Any solvent dispersing medium or volatile component of the adhesive shall have no objectionable door and shall not contain any benzene or carbon tetrachloride. The dried adhesive shall not omit nauseous, irritating, or toxic volatile matters or aerosols when the adhesive is heated to any temperature up to 100 degrees C (212 degrees F). The adhesive shall be nonflammable, fire resistant conforming to ASTM E 84.

2.1.3 Caulking: ASTM C 920, Type S, Grade NS, Class 25, Use A.

2.1.4 Corner Angles: Nominal 0.016 inch aluminum 1 by 1 inch with factory applied kraft backing. Aluminum shall be ASTM B 209, Alloy 3003, 3105, or 5005.

2.1.5 Finishing Cement: Mineral fiber hydraulic-setting thermal insulating cement ASTM C 449.

2.1.6 Glass Tape: Glass tape shall meet the requirements of UL 723 and ASTM E 84.

2.1.6.1 Plain Weave, Untreated: The ends shall be properly interlocked with the picks to ensure that there shall be no raveling of the tape edges. It shall have an average weight of 5.8 plus or minus 10 percent ounces per square yard, an average thickness of 0.007 plus or minus 0.001 inches, warp ends/wales 42 plus or minus 2 per inch or filling picks/courses of 32 plus or minus 2 per inch, a minimum breaking strength of 150 pounds per inch of width, and after heating to 900 degrees F for 2 hours a minimum breaking strength of 40 pounds per inch of width.

2.1.6.2 Knitted, Untreated: The wales shall be properly interlocked with the courses to ensure that there shall be no raveling of the tape edges. It shall have an average weight of 4.5 plus or minus 10 percent ounces per square yard, an average thickness of 0.007 plus or minus 0.001 inches, warp end/wales of 16 plus or minus 2 per inch, a minimum breaking strength of 40 pounds per inch of width, and after heating to 900 degrees F for 2 hours a minimum breaking strength of 21 pounds per inch of width.

2.1.6.3 Distortion Requirements: There shall be no distortion of the tape when a sample 24 inches in length is spread across a flat horizontal surface and observed for evidence of distortion (such as tendency to curl rather than lie flat). The width tolerance is plus or minus 1/8 inch.

2.1.6.4 Open-Weave Type: Tape shall be open-weave type, and shall have an average weight of 4 ounces per square yard and shall be used for embedding between coats of adhesive or coating materials.

2.1.7 Glass Cloth: Glass cloth shall be an untreated light weight satin weave. It shall be woven with an eight-harness satin weave and shall be fabricated from fibrous glass yarn. The yarn shall be made from low twist continuous filament glass fiber. The maximum average diameter of the glass fibers used for the yarns shall not exceed 0.000299 in. The cloth shall meet the requirements of UL 723 and the following properties.

Average weight	8.9 ounces/square yard
Fabric count warp ends	57 yarns/inch
Filling picks	54 yarns/inch

Minimum breaking strength

Warp	200 lb/inch
Filling	180 lb/inch

After heating to 900 degrees F for 2 hrs

Warp	60 lb/inch
Filling	60 lb/inch

Nominal width of the cloth shall be 0.25 feet with the following tolerances:

Up to and including 40 inch plus or minus 1/2 inch
Over 40 in and less than 60 in plus or minus 3/4 inch
Over 60 in plus or minus 1 inch

The cloth shall be furnished in 50 plus or minus 5 yard rolls, the minimum length in a spliced roll shall be 4 yards, and a spliced roll shall contain no more than 3 pieces for each 50 yard length. Open-Weave type of 4.4 ounces/square yard may be used doe embedding between coats of adhesive or coating materials.

2.1.8 Staples: Outward clinching type monel or ASTM A 167, Type 304 or 316 stainless steel.

2.1.9 Jackets: ASTM C 921, Type I, moisture vapor transmission maximum 0.02 perms, puncture resistance minimum 50 Beach units on all surfaces except concealed ductwork, where a minimum puncture resistance of 25 Beach units is allowable, tensile strength minimum 35 pound/inch width; Type II, puncture resistance minimum 25 Beach units, tensile strength minimum 20 pound/inch width. Aluminum jackets shall be corrugated, embossed or smooth sheet, 0.016 inch nominal thickness; ASTM B 209, Temper H14, Temper H16, Alloy 3003, 5005, or 3105 with factory applied moisture barrier. Corrugated aluminum jacket shall not be used outdoors. Aluminum jacket securing bands shall be Type 304 stainless steel, 0.015 inch thick, 1/2 inch wide for pipe under 12 inch diameter and 3/4 inch wide for pipe over 12 inch diameter. Aluminum jacket circumferential seam bands shall be 2 by 0.016 inch aluminum matching jacket material. Bands for insulation belowground shall be 3/4 by 0.020 inch thick stainless steel, or fiberglass reinforced tape. The jacket may, at the option of the Contractor, be provided with a factory fabricated Pittsburg or "Z" type longitudinal joint. When the "Z" joint is used, the bands at the circumferential joints shall be designed by the manufacturer to seal the joints and hold the jacket in place. Polyvinyl chloride (PVC) jacket and fitting covers shall be FS L-P-535, Composition A, Type II, with minimum thickness 0.030 inch. Insulation under PVC jacket shall meet jacket manufacturer's written recommendations.

2.1.10 Vapor Barrier Coating: The vapor barrier coating shall be fire and water resistant and appropriately selected for either outdoor or indoor service. Color shall be white. The water vapor permeance of the compound shall not exceed 0.05 perm and shall be determined according to procedure B of ASTM E 96 utilizing apparatus described in ASTM E 96. The coating shall be a nonflammable, fire resistant type conforming to ASTM E 84, NFPA 90A, and UL 723. The flash point of the compound shall not be less than 80 degrees F and shall be determined in accordance with ASTM D 3278. All other application and service properties shall be in accordance with ASTM C 647.

2.1.11 Wire: Soft annealed ASTM A 580 Type 302, 304 or 316 stainless steel, 16 or 18 gauge.

2.2 PIPE INSULATION MATERIALS: Pipe insulation materials shall be as follows:

2.2.1 Aboveground Cold Pipeline: Insulation for minus 30 degrees to Plus 60 degrees F shall be as follows:

2.2.1.1 Mineral Fiber: ASTM C 547, Class 1 for use up to 450 degrees F and Class 2 for use up to 650 degrees F.

2.2.1.2 Cellular Glass: ASTM C 552, Type II, and Type III.

2.2.1.3 Flexible Cellular Insulation: ASTM C 534, Type I.

2.2.2 Aboveground Hot Pipeline: For aboveground hot pipeline above 60 degrees F insulation the following requirements shall be met.

2.2.2.1 Mineral Fiber: ASTM C 547, Class 1 or Class 2 as required for the operating temperature range.

2.2.2.2 Calcium Silicate: ASTM C 533, Type I indoor only, or outdoors above 250 degrees F pipe temperature.

2.2.2.3 Cellular Glass: ASTM C 552, Type II and Type III.

2.2.2.4 Flexible Cellular Insulation: ASTM C 534, Type I to 200 degrees F service.

2.2.3 Belowground Pipeline Insulation: ASTM C 552, Type II.

2.3 DUCT INSULATION MATERIALS: Duct insulation materials shall be as follows:

2.3.1 Rigid Mineral Fiber: ASTM C 612, Class 1.

2.3.2 Flexible Mineral Fiber: ASTM C 553, Type I, Class B-2.

2.3.3 Cellular Glass: ASTM C 552, Type I.

2.4 EQUIPMENT INSULATION MATERIALS: Equipment insulation materials shall be as follows:

2.4.1 Cold Equipment Insulation: For temperatures below 60 degrees F.

2.4.1.1 Rigid Mineral Fiber: ASTM C 612, Class 1.

2.4.1.2 Flexible Mineral Fiber: ASTM C 553, Type I, Class B-4.

2.4.1.3 Cellular Glass: ASTM C 552, Type I, Type III, or Type IV as required.

2.4.1.4 Flexible Cellular Insulation: ASTM C 534, Type II.

2.4.2 Hot Equipment Insulation: For temperatures above 60 degrees F.

2.4.2.1 Rigid Mineral Fiber: ASTM C 612, Class 2, 3, 4 or 5 as required for temperature encountered to 1800 degrees F.

2.4.2.2 Flexible Mineral Fiber: ASTM C 553, Type I, Class B-4 to 400 degrees F.

2.4.2.3 Calcium Silicate: ASTM C 533, Type I, indoors only, or outdoors above 250 degrees F. Pipe shape may be used on diesel engine exhaust piping and mufflers to 1200 degrees F.

2.4.2.4 Cellular Glass: ASTM C 552, Type I, Type III, or Type IV as required.

2.4.2.5 Flexible Cellular Insulation: ASTM C 534, Type II to 200 degrees F.

PART 3 EXECUTION

3.1 APPLICATION - GENERAL

3.1.1 Installation: Except as otherwise specified, material shall be installed in accordance with the manufacturer's written instructions. Insulation materials shall not be applied until tests specified in other sections of this specification are completed. Material such as rust, scale, dirt and moisture shall be removed from surfaces to receive insulation. Insulation shall be kept clean and dry. Insulation shall not be removed from its shipping containers until the day it is ready to use and shall be returned to like containers or equally protected from dirt and moisture at the end of each workday. Insulation that becomes dirty shall be thoroughly cleaned prior to use. If insulation becomes wet or if aforementioned cleaning does not restore the surfaces to like new condition, the insulation may be rejected, and if rejected, shall be immediately removed from the jobsite. Joints shall be staggered on multilayer insulation. Mineral fiber thermal insulating cement shall be mixed with demineralized water when used on stainless steel surfaces. Insulation, jacketing and accessories shall be installed in accordance with MICA-01 standard plates except where modified herein or on the drawings.

3.1.2 Firestopping: Where pipes and ducts pass through fire walls, fire partitions, above grade floors, and fire rated chase walls, the penetration shall be sealed with UL approved firestopping materials.

3.1.3 Painting and Finishing: Painting shall be as specified in Section 09900 PAINTING, GENERAL.

3.1.4 Flexible Cellular Insulation: Flexible cellular insulation shall be installed with seams and joints sealed with a contact adhesive. Flexible cellular insulation shall not be used on surfaces greater than 200 degrees F. Insulation exposed to weather and not shown to have jacketing shall be protected with two coats of UV resistant finish as recommended by the manufacturer after the adhesive is dry.

3.1.5 Welding: No welding shall be done on piping, duct or equipment without written approval of the Contracting Officer. The capacitor discharge welding process may be used for securing metal fasteners to duct.

3.2 PIPE INSULATION INSTALLATION

3.2.1 Pipe Insulation

3.2.1.1 General: Pipe insulation shall be continuous and installed on fittings and appurtenances unless specified otherwise. Installation shall be with full length units of insulation and using a single cut piece to complete a run. Cut pieces or scraps abutting each other shall not be used. Pipe insulation shall be omitted on the following:

a. Pipe used solely for fire protection.

b. Chromium plated pipe to plumbing fixtures. However, fixtures for use by the physically handicapped shall have the hot water supply and drain, including the trap, insulated where exposed.

c. Vertical portions of interior roof drains.

d. Sanitary drain lines.

e. Unions in pipe above 16 degrees C (60 degrees F).

f. Strainers in pipe above 16 degrees C (60 degrees F).

g. Check valves in pipe above 16 degrees C (60 degrees F).

h. Air chambers.

3.2.1.2 Pipes Passing Through Sleeves

a. Pipe insulation shall be continuous through the sleeve .

b. An aluminum jacket with factory applied moisture barrier shall be provided over the insulation wherever penetrations require sealing.

c. Where penetrating interior walls, the aluminum jacket shall extend 50 mm (2 inches) beyond either side of the wall and shall be secured on each end with a band.

d. Where penetrating floors, the aluminum jacket shall extend from a point below the backup material to a point 250 mm (10 inches) above the floor with one band at the floor and one not more than 25 mm (1 inch) from the end of the aluminum jacket.

e. Where penetrating waterproofed floors, the aluminum jacket shall extend from below the backup material to a point 50 mm (2 inches) above the flashing with a band 25 mm (1 inch) from the end of the aluminum jacket.

f. Where penetrating exterior walls, the aluminum jacket required for pipe exposed to weather shall continue through the sleeve to a point 50 mm (2 inches) beyond the interior surface of the wall.

3.2.1.3 Pipes Passing Through Hangers

a. Insulation, whether hot or cold application, shall be continuous through hangers. All horizontal pipes 2 inches and smaller shall be supported on hangers with the addition of a Type 40 protection shield to protect the insulation in accordance with MSS SP-69. Whenever insulation shows signs of being compressed, or when the insulation or jacket shows visible signs of distortion at or near the support shield, insulation inserts as specified below for piping larger than 50 mm (2 inches) shall be installed.

b. Horizontal pipes larger than 50 mm (2 inches) at 60 degrees F and above shall be supported on hangers with the addition of a Type 39 saddle in accordance with MSS SP-69.

c. Horizontal pipes larger than 2 inches below 60 degrees F shall be supported on hangers with the addition of a Type 40 protection shield in accordance with MSS SP-69. An insulation insert of cellular glass or calcium silicate shall be installed above each shield. The insert shall cover not less than the bottom 180 degree arc of the pipe. Inserts shall be the same thickness as the insulation, and shall extend 50 mm (2 inches) on each end beyond the protection shield. When insulation inserts are required per the above, and the insulation thickness is less than 1 inch, wooden or cork dowels or blocks may be installed between the pipe and the shield to prevent the weight of the pipe from crushing the insulation as an option to installing insulation inserts. The insulation jacket shall be continuous over the wooden dowel, wooden block, or insulation insert.

d. Vertical pipes shall be supported with either Type 8 or Type 42 riser clamps with the addition of two Type 40 protection shields in accordance with MSS SP-69 covering the 360 degree arc of the insulation. An insulation insert of cellular glass or calcium silicate shall be installed between each shield and the pipe. The insert shall cover the 360 degree arc of the pipe. Inserts shall be the same thickness as the insulation, and shall extend 50 mm (2 inches) on each end beyond the protection shield. When insulation inserts are required per the above, and the insulation thickness is less than 1 inch, wooden or cork dowels or blocks may be installed between the pipe and the shield to prevent the hanger from crushing the insulation as an option instead of installing insulation inserts. The insulation jacket shall be continuous over the wooden dowel, wooden block, or insulation insert. The vertical weight of the pipe shall be supported with hangers located in a horizontal section of the pipe. When the pipe riser is longer than 30 feet, the weight of the pipe shall be additionally supported hangers in the vertical run of the pipe which are directly clamped to the pipe, penetrating the pipe insulation. These hangers shall be insulated and the insulation jacket sealed as indicated herein for anchors in a similar service.

e. Inserts shall be covered with a jacket material of the same appearance and quality as the adjoining pipe insulation jacket, shall overlap the adjoining pipe jacket 1-1/2 inches, and shall be sealed as required for the pipe jacket. The jacket material used to cover inserts in flexible cellular insulation shall conform to ASTM C 921, Type 1, and is allowed to be of a different material than the adjoining insulation material.

3.2.1.4 Flexible Cellular Pipe Insulation: Flexible cellular pipe insulation shall be tubular form for pipe sizes 5 inches and less. Sweat fittings shall be insulated with miter-cut pieces the same size as on adjacent piping. Screwed fittings shall be insulated with sleeved fitting covers fabricated from miter-cut pieces and shall be overlapped and sealed to the adjacent pipe insulation.

3.2.2 Aboveground Cold Pipelines: The following shall be included for aboveground cold pipelines (minus 30 degrees to Plus 60 degrees F):

a. Domestic cold and chilled drinking water.

b. Make-up water.

c. Horizontal and vertical portions of interior roof drains.

d. Refrigerant suction lines.

e. Chilled water.

f. Dual temperature water, i.e. HVAC hot/chilled water.

g. Air conditioner condensate drains.

3.2.3 Insulation Thickness: Thickness of insulation shall be as indicated in TABLE I.

TABLE I
Pipe Size (Inches)

Service or Range of Temp (degrees F)	Run-outs* 1/4 to 1-1/2	1/4 to 1-1/4	1-1/2 to 3	3-1/2 to 5	6 to 10	11 to 24	25 to 33
60 to 35 (FC)	1/2	1	1				
(CG)	1-1/2	1-1/2	2	2	2	2	
(MF)	1	1	1-1/2	1-1/2	1-1/2	1-1/2	
34 to 0 (CG)	2-1/2	2-1/2	2-1/2	3	3	3-1/2	
(MF)	1-1/2	1-1/2	2	2	2-1/2	2-1/2	
-1 to -30 (CG)	3	3	3	3-1/2	3-1/2	4	
(MF)	1-1/2	2	2-1/2	2-1/2	3	3	
Domestic (FC)	1/2	1/2	1/2				
Cold Water (CG)	1	1	1	1-1/2	1-1/2	1-1/2	
and Interior (MF)	1/2	1/2	1/2	1	1	1	
Roof Drain Lines (Horizontal portions only)							

NOTES:
CG - Cellular Glass
MF - Mineral Fiber
FC - Flexible Cellular

*When runouts to terminal units exceed 12 feet, the entire length of runout shall be insulated like the main feed pipe.

3.2.3.1 Jacket for Fibrous and Cellular Glass Insulated Pipe: Insulation shall be covered with a factory applied vapor barrier jacket or field applied seal welded PVC jacket. Insulation inside the building shown to be protected with an aluminum jacket shall have the insulation and vapor barrier jacket installed as

specified herein. The aluminum jacket shall be installed as specified for piping exposed to weather, except sealing of the laps of the aluminum jacket is not required.

3.2.3.2 Insulation for Straight Runs (Fibrous and Cellular Glass)

a. Insulation shall be applied to the pipe with joints tightly butted. The ends of fibrous insulation shall be sealed off with vapor barrier coating at intervals not to exceed 15 feet.

b. Longitudinal laps of the jacket material shall overlap not less than 1-1/2 inches. Butt strips 3 inches wide shall be provided for circumferential joints.

c. Laps and butt strips shall be secured with adhesive and stapled on 4 inch centers if not factory self-sealing.

d. Factory self-sealing lap systems may be used when the ambient temperature is between 40 degrees F and 120 degrees F during installation. The lap system shall be installed in accordance with manufacturer's recommendations. Stapler shall be used only if specifically recommended by the manufacturer. Where gaps occur, the section shall be replaced or the gap repaired by applying adhesive under the lap and then stapling.

e. All Staples, including those used to repair factory self-seal lap systems, shall be coated with a vapor barrier coating. All seams, except those on factory self-seal systems shall be coated with vapor barrier coating.

f. Breaks and punctures in the jacket material shall be patched by wrapping a strip of jacket material around the pipe and securing it with adhesive, stapling, and coated with vapor barrier coating. The patch shall extend not less than 1-1/2 inches past the break.

g. At penetrations such as thermometers, the voids in the insulation shall be filled and sealed with vapor barrier coating.

3.2.3.3 Insulation for Fittings and Accessories

a. Pipe insulation shall have ends thoroughly coated with a vapor barrier coating not more than 6 inches from each flange, union, valve, anchor, or fitting in all directions.

b. Insulation may be premolded or segmented. Insulation of the same thickness and conductivity as the adjoining pipe insulation shall be used. If nesting size insulation is used, the insulation should be overlapped 2 inches or one pipe diameter. Loose fill mineral fiber or insulating cement shall be used to fill the voids. Insulation for elbows less than 3 inch size shall be premolded. Insulation for elbows 3 inch size and larger shall be either premolded or segmented. Elbows insulated using segments shall not have less than 3 segments per elbow. Insulation may be secured by wire or tape until finish is applied.

c. Upon completion of installation of insulation on flanges, unions, valves, anchors, fittings and accessories, terminations and insulation not protected by factory vapor barrier jackets or PVC fitting covers shall be protected with two coats of vapor barrier coating with a minimum total thickness of 1/16th inch, applied with glass tape embedded between coats. Tape seams shall overlap 1 inch. The coating shall extend out onto the adjoining pipe insulation 2 inches.

d. Anchors attached directly to the pipe shall be insulated for a sufficient distance to prevent condensation but not less than 6 inches from the insulation surface.

e. Flexible connections at pumps and other equipment shall be insulated with 1/2 inch flexible cellular insulation, unless otherwise indicated.

f. Insulation shall be marked showing the location of unions, strainers, and check valves.

3.2.3.4 Optional PVC Fitting Covers: At the option of the Contractor, premolded, one or two piece PVC fitting covers may be used in lieu of the vapor barrier and embedded glass tape. Factory premolded insulation segments shall be used under the fitting covers for elbows. Insulation segments shall be the same thickness as adjoining pipe insulation and the insulation shall be protected with one coat of vapor barrier coating under the PVC cover. The covers shall be secured by PVC vapor barrier tape, adhesive, seal-welding or with tacks made for securing PVC covers. Seams in the cover, and tacks and laps to adjoining pipe insulation jacket, shall be sealed with vapor barrier tape to ensure that the assembly has a continuous vapor seal. Factory or fieldcut blanket insulation shall not be used on pipe below 60 degrees F.

3.2.4 Aboveground Hot Pipelines: For hot pipelines above 60 degrees F the following shall be included:

a. Domestic hot water.

b. Hot water heating.

3.2.4.1 Insulation Thickness: Insulation thickness shall be determined using the manufacturer's published thermal conductivity k, and TABLE II. 60 degrees F to 200 degrees F

TABLE II

REQUIRED THICKNESS (IN INCHES) OF PIPE INSULATION
FOR HANDLING STEAM TO 15 PSIG AND FLUIDS OTHER THAN
DOMESTIC HOT WATER TO 250 DEGREES F

k = thermal conductivity (average) Btu/hr. sq. ft.
degree/in. thickness at a mean temperature of 75 degrees F

Thermal conductivity k	Pipe Size, Inches 2 or less	2-1/2 to 3	4	5 to 6	8	10	12	
0.25	1.5	1.5		2.0	2.0	2.0	2.0	2.5
0.30	1.5	2.0		2.5	2.5	2.5	2.5	3.0
0.35	2.0	2.5		2.5	2.5	3.5	3.5	3.5
0.40	2.5	3.5		3.5	3.0	4.0	4.0	4.0
0.45	3.0	4.0		4.0	3.5	4.5	4.5	4.5

3.2.4.2 Jacket for Insulated Pipe: Insulation shall be covered with a factory applied Type II jacket or field applied aluminum where required or seal welded PVC.

3.2.4.3 Insulation for Straight Runs

a. Insulation shall be applied to the pipe with joints tightly butted.

b. Longitudinal laps of the jacket material shall overlap not less than 1-1/2 inches, and butt strips 3 inches wide shall be provided for circumferential joints.

c. Laps and butt strips shall be secured with adhesive and stapled on 4 inch centers if not factory self-sealing. Adhesive may be omitted where pipe is concealed.

d. Factory self-sealing lap systems may be used when the ambient temperature is between 40 degrees and 120 degrees F and shall be installed in accordance with manufacturer's instructions. Laps and butt strips shall be stapled whenever there is nonadhesion of the system. Where gaps occur, the section shall be replaced or the gap repaired by applying adhesive under the lap and then stapling.

e. Breaks and punctures in the jacket material shall be patched by wrapping a strip of jacket material around the pipe and be secured with adhesive and stapled on 4 inch centers if not factory self-sealing. Adhesive may be omitted where pipe is concealed. Patch shall extend not less than 1-1/2 inches past the break.

3.2.4.4 Insulation for Fittings and Accessories

a. The run of the line pipe insulation shall have the ends brought up to the item.

b. Insulation of the same thickness and conductivity as the adjoining pipe insulation, either premolded or segmented, shall be placed around the item abutting the adjoining pipe insulation, or if nesting size insulation is used, overlapping 2 inches or one pipe diameter. Loose fill mineral fiber or insulating cement shall be used to fill the voids. Insulation for elbows less than 3 inch size shall be premolded. Insulation for elbows 3 inch size and larger shall be either premolded or segmented. Elbows insulated using segments shall have not less than 3 segments per elbow. Insulation may be wired or taped on until finish is applied.

c. Upon completion of installation of insulation on flanges, unions, valves, anchors, fittings and accessories, terminations and insulation not protected by factory vapor barrier jackets or PVC fitting covers shall be protected with two coats of Class 1 adhesive applied with glass tape embedded between coats. Tape seams shall overlap 1 inch. Adhesive shall extend onto the adjoining insulation not less than 2 inches. The total dry film thickness shall be not less than 1/16 inch.

d. Insulation terminations shall be tapered to unions at a 45-degree angle.

e. At the option of the Contractor, factory premolded one- or two-piece PVC fitting covers may be used in lieu of the adhesive and embedded glass tape. Factory premolded segments or factory or field cut blanket insert insulation segments shall be used under the cover and shall be the same thickness as adjoining pipe insulation. The covers shall be secured by PVC vapor barrier tape, adhesive, seal-welding or with tacks made for securing PVC covers.

3.2.5 Piping Exposed to Weather: Piping exposed to weather shall be insulated and jacketed as specified for the applicable service inside the building. After this procedure, an aluminum jacket shall be applied. PVC jacketing requires no factory applied jacket beneath it.

3.2.5.1 Aluminum Jacket: The jacket for hot piping may be factory applied. The jacket shall overlap not less than 50 mm 2 inches at longitudinal and circumferential joints and shall be secured with bands at not more than 300 mm 12 inch centers. Longitudinal joints shall be overlapped down to shed water and located at 4 or 8 o'clock positions. Joints on piping 16 degrees C 60 degrees F and below shall be sealed with caulking while overlapping to prevent moisture penetration. Where jacketing on piping 16 degrees C 60 degrees F and below abuts an uninsulated surface, joints shall be caulked to prevent moisture penetration. Joints on piping above 60 degrees F shall be sealed with a moisture barrier.

3.2.5.2 Insulation for Fittings: Flanges, unions, valves, fittings, and accessories shall be insulated and finished as specified for the applicable service. Two coats of an emulsion type weatherproof mastic recommended by the insulation manufacturer shall be applied with glass tape embedded between coats. Tape overlaps shall be not less than 1 inch and the adjoining aluminum jacket not less than 2 inches.

Factory preformed aluminum jackets may be used in lieu of the above. Molded PVC fitting covers shall be used with PVC lagging and adhesive welded moisture tight.

3.2.5.3 PVC Lagging: PVC lagging shall be ultraviolet resistant and adhesive welded vapor tight with manufacturer's recommended adhesive. Installation shall include provision for thermal expansion.

3.3 DUCT INSULATION INSTALLATION: Corner angles shall be installed on external corners of insulation on ductwork in exposed finished spaces before covering with jacket. Duct insulation shall be omitted on the following:

a. Return ducts in ceiling spaces. Ceiling spaces shall be defined as those spaces between the ceiling and bottom of floor deck or roof deck inside the air conditioned space insulated envelope.

b. Supply ducts in ceiling spaces which are used as return air plenums. Ceiling spaces shall be defined as those spaces between the ceiling and bottom of floor deck or roof deck inside the air conditioned space insulated envelope.

c. Factory preinsulated flexible ducts.

d. Ducts within HVAC equipment.

e. Exhaust air ducts unless noted.

3.3.1 Insulation for Warm Air Duct: For warm air ducts above 60 degrees F, ducts and associated equipment shall be insulated to a thickness of 2 inches except fresh air intake ducts which shall be 1-1/2 inches. The following shall be insulated:

a. Supply ducts.

b. Return air ducts.

c. Relief air ducts.

d. Flexible runouts (field insulated).

e. Plenums.

f. Duct-mounted coil casings.

g. Coil-headers and return bends.

h. Coil casings.

I. Fresh air intake ducts.

j. Filter boxes.

k. Mixing boxes.

l. Supply fans.

Insulation for rectangular ducts shall be flexible type where concealed, minimum density 3/4 pcf; and rigid type where exposed, minimum density 3 pcf. Insulation on exposed ducts shall be provided with a white, paintable, factory-applied Type II jacket, or finished with Class 1 adhesive finish. Flexible type

insulation shall be used for round ducts, minimum density 3/4 pcf with a factory-applied Type II jacket. Insulation on concealed duct shall be provided with a factory-applied Type II jacket. Class 1 adhesive finish where indicated to be used shall be accomplished by applying two coats of Class 1 adhesive with a layer of glass cloth embedded between the coats. The total dry film thickness shall be approximately 1/16 inch. Duct insulation shall be continuous through sleeves and prepared openings. Duct insulation shall terminate at fire dampers and flexible connections.

3.3.1.1 Installation on Concealed Duct

a. For rectangular, oval and round ducts, insulation shall be attached by applying Class 2 adhesive around the entire perimeter of the duct in 6 inch wide strips on 12 inch centers.

b. For rectangular and oval ducts 24 inches and larger, insulation shall be secured to the bottom of ducts by the use of mechanical fasteners. Fasteners shall be spaced on 18 inch centers and not more than 18 inches from duct corner.

c. For rectangular, oval and round ducts, mechanical fasteners shall be provided on sides of duct risers for all duct sizes. Fasteners shall be spaced on 18 inch centers and not more than 18 inches from duct corners.

d. The insulation shall be impaled on the mechanical fasteners where used and shall be pressed thoroughly into the adhesive. The insulation shall not be compressed to a thickness less than that specified. Insulation shall be carried over standing seams and trapeze-type hangers.

e. Self-locking washers shall be installed where mechanical fasteners are used and the pin trimmed and bent over.

f. Insulation jacket shall overlap not less than 2 inches at joints and the lap shall be secured with Class 2 adhesive under the lap and stapled on 4 inch centers.

3.3.1.2 Installation on Exposed Duct

a. For rectangular ducts, the rigid insulation shall be secured to the duct by the use of mechanical fasteners on all four sides of the duct, spaced not more than 300 mm 12 inches apart and not more than 3 inches from the edges of the insulation joints. A minimum of two rows of fasteners shall be provided for each side of duct 12 inches and larger and a minimum of one row for each side of duct less than 12 inches.

b. Duct insulation with factory-applied jacket shall be formed with minimum jacket seams, and each piece of rigid insulation shall be fastened to the duct using mechanical fasteners. Insulation shall be brought up to standing seams, reinforcing, and other vertical projections and shall not be carried over the projection. Jacket shall be continuous across seams, reinforcing, and projections. Where height of projections is greater than the insulation thickness, insulation and jacket shall be carried over the projection.

c. Insulation shall be impaled on the fasteners; self-locking washers shall be installed and pin excess clipped and bent over.

d. Joints on jacketed insulation shall be sealed with a 4 inch wide strip of the same material as the jacket. The strip shall be secured with Class 2 adhesive and stapled.

e. Breaks and penetrations in the jacket material shall be covered with a patch of the same material as the jacket. Patches shall extend not less than 2 inches beyond the break or penetration and shall be secured with Class 2 adhesive and stapled.

f. Insulation terminations and pin punctures shall be sealed and flashed with a Class 1 adhesive. Two coats of Class 1 adhesive coating shall be applied with glass cloth embedded between coats. The total coating shall have a dry film thickness of approximately 1/16 inch and shall overlap the adjoining insulation and uninsulated surface 2 inches.

g. Oval and round ducts, flexible type, shall be insulated with factory Type I jacket insulation, minimum density of 3/4 pcf attached by applying Class 2 adhesive around the entire perimeter of the duct in 150 mm 6 inch wide stripe on 12 inch center. Joints shall be sealed with a 4 inch wide strip of the same material as the jacket. The strip shall be secured with Class 2 adhesive and stapled.

3.3.2 Duct Test Holes: After duct systems have been tested, adjusted, and balanced, breaks in the insulation and jacket shall be repaired in accordance with the applicable section of this specification for the type of duct insulation to be repaired.

3.4 EQUIPMENT INSULATION INSTALLATION

3.4.1 General: Removable insulation sections shall be provided to cover parts of equipment which must be opened periodically for maintenance including vessel covers, fasteners, flanges and accessories. Equipment insulation shall be omitted on the following:

a Handholes.

b Boiler manholes.

c Cleanouts.

d ASME stamps.

e Manufacturer's nameplates.

3.4.2 Insulation for Cold Equipment: Cold equipment below 60 degrees F: Insulation shall be furnished on equipment handling media below 60 degrees F including the following:

a. Pumps.

b Drip pans under chilled equipment.

c Pneumatic water tanks.

d Roof drain bodies.

e Air handling equipment parts that are not factory insulated.

f Expansion and air separation tanks.

3.4.2.1 Insulation Type: Insulation shall be suitable for the temperature encountered. Thicknesses shall be as follows:

a. Equipment Handling Media Between 35 and 60 degrees F: 1-1/2 inch thick mineral fiber, 2 inch thick cellular glass, or 1-1/2 inch thick flexible cellular.

b. Equipment Handling Media Between 0 degree F and 34 degrees F: 2-1/2 inch thick mineral fiber, 3-1/2 inch thick cellular glass, or 2-1/2 inch flexible cellular.

c. Equipment Handling Media Between Minus 30 degrees F and Minus 1 degree F: 3 inch thick mineral fiber, 4 inch thick cellular glass or 3 inch thick flexible cellular.

3.4.2.2 Pump Insulation

a. Pumps shall be insulated by forming a box around the pump housing. The box shall be constructed by forming the bottom and sides using joints which do not leave raw ends of insulation exposed. Joints between sides and between sides and bottom shall be joined by adhesive with lap strips for rigid mineral fiber and contact adhesive for flexible cellular insulation. The box shall conform to the requirements of MICA-01 plate No. 49 when using flexible cellular insulation. Joints between top cover and sides shall fit tightly forming a female shiplap joint on the side pieces and a male joint on the top cover, thus making the top cover removable.

b. Exposed insulation corners shall be protected with corner angles.

c. Upon completion of installation of the insulation, including removable sections, two coats of vapor barrier coating shall be applied with a layer of glass cloth embedded between the coats. The total dry thickness of the finish shall be 1/16 inch. A parting line shall be provided between the box and the removable sections allowing the removable sections to be removed without disturbing the insulation coating. Caulking shall be applied to parting line, between equipment and removable section insulation, and at all penetrations.

3.4.2.3 Other Equipment

a. Insulation shall be formed or fabricated to fit the equipment. To ensure a tight fit on round equipment, edges shall be beveled and joints shall be tightly butted and staggered.

b. Insulation shall be secured in place with bands or wires at intervals as recommended by the manufacturer but not more than 300 mm 12 inch centers except flexible cellular which shall be adhered. Insulation corners shall be protected under wires and bands with suitable corner angles.

c. Cellular glass insulation shall be set in a coating of bedding compound, and joints shall be sealed with bedding compound as recommended by the manufacturer. Mineral fiber insulation joints shall be filled with finishing cement.

d. Insulation on heads of heat exchangers shall be removable. Removable section joints shall be fabricated using a male-female shiplap type joint. The entire surface of the removable section shall be finished by applying two coats of vapor barrier coating with a layer of glass cloth embedded between the coats. The total dry thickness of the finish shall be 1/16 inch.

e. Exposed insulation corners shall be protected with corner angles.

f. Insulation on equipment with ribs shall be applied over 6 by 6 inches by 12 gauge welded wire fabric which has been cinched in place, or if approved by the Contracting Officer, spot welded to the equipment over the ribs. Insulation shall be secured to the fabric with J-hooks and 2 by 2 inches washers or shall be securely banded or wired in place on 12 inch centers.

3.4.2.4 Vapor Barrier: Upon completion of installation of insulation, penetrations shall be caulked. Two coats of vapor barrier coating shall be applied over insulation, including removable sections, with a layer of glass cloth embedded between the coats. The total dry thickness of the finish shall be 1/16 inch. Caulking shall be applied to parting line between equipment and removable section insulation.

3.4.3 Insulation for Hot Equipment: 60 degrees F: Insulation shall be furnished on equipment handling media above 60 degrees F including the following:

a. Water heaters.

b. Pumps handling media above 130 degrees F.

c. Air separation tanks.

d. Boiler flue gas connection from boiler to stack (if inside).

3.4.3.1 Insulation: Insulation shall be suitable for the temperature encountered. Shell and tube-type heat exchangers shall be insulated for the temperature of the shell medium. Insulation thicknesses shall be as follows:

a. Equipment handling steam to 15 psig or other media to: 250 degrees F: 2 inch thick material.

b. Equipment handling steam to 200 psig or other media to 400 degrees F: 3-1/2 inch thick material.

c. Equipment handling media to 600 degrees F: 6 inch thick material.

d. Equipment handling media above 600 degrees F: Insulate with a thickness of material required to limit the external temperature of the insulation to 120 degrees F except that diesel engine exhaust piping and mufflers shall be covered with 6 inch thick material suitable for 1200 degrees F service. Heat transfer calculations shall be submitted to substantiate insulation and thickness selection.

3.4.3.2 Insulation of Pumps: Pumps shall be insulated by forming a box around the pump housing. The box shall be constructed by forming the bottom and sides using joints which do not leave raw ends of insulation exposed. Bottom and sides shall be banded to form a rigid housing which does not rest on the pump. Joints between top cover and sides shall fit tightly. The top cover shall have a joint forming a female shiplap joint on the side pieces and a male joint on the top cover, thus making the top cover removable. Two coats of Class I adhesive shall be applied over insulation, including removable sections, with a layer of glass cloth embedded between the coats. A parting line shall be provided between the box and the removable sections allowing the removable sections to be removed without disturbing the insulation coating. The total dry thickness of the finish shall be 1/16 inch. Caulking shall be applied to parting line of the removable sections and penetrations.

3.4.3.3 Other Equipment

a. Insulation shall be formed or fabricated to fit the equipment. To ensure a tight fit on round equipment, edges shall be beveled and joints shall be tightly butted and staggered.

b. Insulation shall be secured in place with bands or wires at intervals as recommended by the manufacturer but not greater than 12 inch centers except flexible cellular which shall be adhered. Insulation corners shall be protected under wires and bands with suitable corner angles.

c. Cellular glass insulation shall be set in a coating of bedding compound as recommended by the manufacturer, and joints shall be sealed with bedding compound. Mineral fiber joints shall be filled with finishing cement.

d. Insulation on heads of heat exchangers shall be removable. The removable section joint shall be fabricated using a male-female shiplap type joint. Entire surface of the removable section shall be finished as specified.

e. Exposed insulation corners shall be protected with corner angles.

f. On equipment with ribs such as boiler flue gas connection, draft fans, and fly ash or soot collectors, insulation shall be applied over 6 by 6 inches by 12 gauge welded wire fabric which has been cinched in place, or if approved by the Contracting Officer, spot welded to the equipment over the ribs. Insulation shall be secured to the fabric with J-hooks and 2 by 2 inches washers or shall be securely banded or wired in place on 12 inch (maximum) centers.

g. On equipment handling media above 600 degrees F, insulation shall be applied in two or more layers with joints staggered.

h. Upon completion of installation of insulation, penetrations shall be caulked. Two coats of Class I adhesive shall be applied over insulation, including removable sections, with a layer of glass cloth embedded between the coats. The total dry thickness of the finish shall be 1/16 inch. Caulking shall be applied to parting line between equipment and removable section insulation.

-- End of Section --

INDEX

SECTION 15400

PLUMBING, GENERAL PURPOSE

Paragraph		Page
1.1	REFERENCES	1
1.2	STANDARD PRODUCTS	7
1.3	PERFORMANCE REQUIREMENTS	7
1.4	ELECTRICAL WORK	7
1.5	SUBMITTALS	7
1.6	REGULATORY REQUIREMENTS	9
1.7	PROJECT/SITE CONDITIONS	9
2.1	MATERIALS	9
2.2	PIPE HANGERS, INSERTS, AND SUPPORTS	10
2.3	VALVES	10
2.4	FIXTURES	12
2.5	BACKFLOW PREVENTERS	12
2.6	DRAINS	12
2.7	SHOWER PAN	13
2.8	TRAPS	14
2.9	WATER HEATER	14
2.10	PUMPS	14
3.1	GENERAL INSTALLATION REQUIREMENTS	15
3.2	WATER HEATERS AND HOT WATER STORAGE TANKS	21
3.3	FIXTURES AND FIXTURE TRIMMINGS	21
3.4	VIBRATION-ABSORBING FEATURES	24
3.5	WATER METER REMOTE READOUT REGISTER	24
3.6	IDENTIFICATION SYSTEMS	24
3.7	ESCUTCHEONS	24
3.8	PAINTING	24
3.9	TESTS, FLUSHING, AND STERILIZATION	24
3.10	PLUMBING FIXTURE SCHEDULE	26
3.11	PERFORMANCE OF WATER HEATING EQUIPMENT	28

SECTION 15400

PLUMBING, GENERAL PURPOSE

PART 1 GENERAL

1.1 REFERENCES: The publications listed below form a part of this specification to the extent referenced. The publications are referred to in the text by basic designation only.

AIR CONDITIONING AND REFRIGERATION INSTITUTE (ARI)

ARI 1010	(1994) Drinking-Fountains and Self-Contained, Mechanically-Refrigerated Drinking-Water Coolers

AMERICAN NATIONAL STANDARDS INSTITUTE (ANSI)

ANSI SAMA Z236.1	(1983) General Purpose Lab for Liquid-in-Glass Thermometers - General Purpose Laboratory Use
ANSI Z21.10.1	(1993) Gas Water Heaters Vol. I Storage Water Heaters with Input Ratings of 75,000 Btu Per Hour or Less
ANSI Z21.10.3	(1993; Z21.10.3) Gas Water Heaters Vol. III Storage, with Input Ratings Above 75,000 Btu Per Hour, Circulating and Instantaneous Water Heaters
ANSI Z21.22	(1986; Z21.22a) Relief Valves and Automatic Gas Shutoff Devices for Hot Water Supply Systems
ANSI Z358.1	(1990) Emergency Eyewash and Shower Equipment

AMERICAN SOCIETY FOR TESTING AND MATERIALS (ASTM)

ASTM A 47	(1990) Ferritic Malleable Iron Castings
ASTM A 53	(1993a) Pipe, Steel, Black and Hot-Dipped, Zinc-Coated Welded and Seamless
ASTM A 74	(1994) Cast Iron Soil Pipe and Fittings
ASTM A 105	(1994) Forgings, Carbon Steel, for Piping Components
ASTM A 183	(1983; R 1990) Carbon Steel Track Bolts and Nuts
ASTM A 193	(1994b) Alloy-Steel and Stainless Steel Bolting Materials for High-Temperature Service
ASTM A 515	(1992) Pressure Vessel Plates, Carbon Steel, for Intermediate- and Higher-Temperature Service
ASTM A 516	(1990) Pressure Vessel Plates, Carbon Steel, for Moderate- and Lower-Temperature Service
ASTM A 536	(1984; R 1993) Ductile Iron Castings

ASTM A 888	(1994) Hubless Cast Iron Soil Pipe and Fittings for Sanitary and Storm Drain, Waste, and Vent Piping Applications
ASTM B 32	(1993) Solder Metal
ASTM B 42	(1993) Seamless Copper Pipe, Standard Sizes
ASTM B 43	(1991) Seamless Red Brass Pipe, Standard Sizes
ASTM B 75	(1993) Seamless Copper Tube
ASTM B 88	(1993a) Seamless Copper Water Tube
ASTM B 117	(1994) Operating Salt Spray (Fog) Testing Apparatus
ASTM B 152	(1993a) Copper Sheet, Strip, Plate, and Rolled Bar
ASTM B 306	(1992) Copper Drainage Tube (DWV)
ASTM B 370	(1992) Copper Sheet and Strip for Building Construction
ASTM B 584	(1993b) Copper Alloy Sand Castings for General Applications
ASTM B 641	(1993) Seamless and Welded Copper Distribution Tube (Type D)
ASTM B 813	(1993) Liquid and Paste Fluxes for Soldering Applications of Copper and Copper Alloy Tube
ASTM C 564	(1993) Rubber Gaskets for Cast Iron Soil Pipe and Fittings
ASTM C 920	(1987) Elastomeric Joint Sealants
ASTM D 1004	(1994a) Initial Tear Resistance of Plastic Film and Sheeting
ASTM D 1248	(1984; R 1989) Polyethylene Plastics Molding and Extrusion Materials
ASTM D 2000	(1990) Rubber Products in Automotive Applications
ASTM D 2485	(1991) Evaluating Coatings for High Temperature Service
ASTM D 2822	(1991) Asphalt Roof Cement
ASTM D 3138	(1993) Solvent Cements for Transition Joints Between Acrylonitrile-Butadiene-Styrene (ABS) and Poly(Vinyl Chloride) (PVC) Non-pressure Piping Components
ASTM D 3139	(1989) Joints for Plastic Pressure Pipes Using Flexible Elastomeric Seals
ASTM D 3212	(1992) Joints for Drain and Sewer Plastic Pipes Using Flexible Elastomeric Seals
ASTM D 3311	(1992) Drain, Waste, and Vent (DWV) Plastic Fittings Patterns
ASTM D 4060	(1990) Abrasion Resistance of Organic Coatings by the Taber Abraser

ASTM E 96	(1994) Water Vapor Transmission of Materials
ASTM F 409	(1993) Thermoplastic Accessible and Replaceable Plastic Tube and Tubular Fittings
ASTM F 477	(1993) Elastomeric Seals (Gaskets) for Joining Plastic Pipe

AMERICAN SOCIETY OF HEATING, REFRIGERATING AND AIR-CONDITIONING ENGINEERS (ASHRAE)

ASHRAE 90.1	(1989; 90.1b; 90.1c; 90.1d; 90.1e; 90.1g; 90.1i) Energy Efficient Design of New Buildings Except Low-Rise Residential Buildings

AMERICAN SOCIETY OF MECHANICAL ENGINEERS (ASME)

ASME A112.1.2	(1991) Air Gaps in Plumbing Systems
ASME A112.6.1M	(1988) Supports for Off-the-Floor Plumbing Fixtures for Public Use
ASME A112.14.1	(1975; R 1990) Backwater Valves
ASME A112.18.1M	(1994; Errata Feb 1995) Plumbing Fixture Fittings
ASME A112.19.2M	(1990) Vitreous China Plumbing Fixtures
ASME A112.21.1M	(1991) Floor Drains
ASME A112.36.2M	(1991) Cleanouts
ASME B1.20.1	(1983; R 1992) Pipe Threads, General Purpose (Inch)
ASME B16.3	(1992) Malleable Iron Threaded Fittings
ASME B16.4	(1992) Cast Iron Threaded Fittings
ASME B16.5	(1988; Errata Oct 88; B16.5a) Pipe Flanges and Flanged Fittings
ASME B16.12	(1991) Cast Iron Threaded Drainage Fittings
ASME B16.15	(1985) Cast Bronze Threaded Fittings Classes 125 and 250
ASME B16.18	(1984) Cast Copper Alloy Solder Joint Pressure Fittings
ASME B16.21	(1992) Nonmetallic Flat Gaskets for Pipe Flanges
ASME B16.22	(1989) Wrought Copper and Copper Alloy Solder Joint Pressure Fittings
ASME B16.23	(1992; Errata Jan 1994) Cast Copper Alloy Solder Joint Drainage Fittings - DWV
ASME B16.24	(1991; Errata Jun 91) Cast Copper Alloy Pipe Flanges, Class 150, 300, 400, 600, 900, 1500 and 2500, and Flanged Fittings, Class 150 and 300

ASME B16.29	(1986) Wrought Copper and Wrought Copper Alloy Solder Joint Drainage Fittings - DWV
ASME B31.1	(1992; B31.1a; B31.1b; B31.1c) Power Piping
ASME B31.5	(1992; B31.5a) Refrigeration Piping
ASME B40.1	(1991) Gauges - Pressure Indicating Dial Type - Elastic Element
ASME BPV IX	(1992; Addenda Dec 1992, Dec 1993, Dec 1994) Boiler and Pressure Vessel Code; Section IX, Welding and Brazing Qualifications
ASME CSD-1	(1992; CSD-1a; CSD-1b) Controls and Safety Devices for Automatically Fired Boilers

AMERICAN SOCIETY OF SANITARY ENGINEERING (ASSE)

ASSE 1001	(1990) Pipe Applied Atmospheric Type Vacuum Breakers
ASSE 1003	(1981) Water Pressure Reducing Valves for Domestic Water Supply Systems
ASSE 1005	(1993) Water Heater Drain Valves - 3/4-Inch Iron Pipe Size
ASSE 1011	(1993) Hose Connection Vacuum Breakers
ASSE 1012	(1993) Backflow Preventers with Intermediate Atmospheric Vent
ASSE 1013	(1993) Reduced Pressure Principle Backflow Preventers
ASSE 1018	(1986) Trap Seal Primer Valves Water Supply Fed
ASSE 1037	(1990) Pressurized Flushing Devices (Flushometers) for Plumbing Fixtures/F

AMERICAN WATER WORKS ASSOCIATION (AWWA)

AWWA-01	(1992) Standard Methods for the Examination of Water and Wastewater
AWWA B300	(1992) Hypochlorites
AWWA B301	(1992) Liquid Chlorine
AWWA C105	(1988) Polyethylene Encasement for Ductile-Iron Piping for Water and Other Liquids
AWWA C203	(1991) Coal-Tar Protective Coatings and Linings for Steel Water Pipelines - Enamel and Tape - Hot-Applied
AWWA C606	(1987) Grooved and Shouldered Joints
AWWA C700	(1990; C700a) Cold-water Meters - Displacement Type, Bronze Main Case
AWWA M20	(1973) Manual: Water Chlorination Principles and Practices

AMERICAN WELDING SOCIETY (AWS)

AWS A5.8	(1992) Filler Metals for Brazing and Braze Welding
AWS B2.2	(1991) Brazing Procedure and Performance Qualification

CAST IRON SOIL PIPE INSTITUTE (CISPI)

CISPI 301	(1990) Hubless Cast Iron Soil Pipe and Fittings for Sanitary and Storm Drain, Waste, and Vent Piping Applications
CISPI HSN	(1985) Neoprene Rubber Gaskets for Hub and Spigot Cast Iron Soil Pipe and Fittings

CODE OF FEDERAL REGULATIONS (CFR)

10 CFR 430 Energy Conservation Program for Consumer Products

COMMERCIAL ITEM DESCRIPTIONS (CID)

CID A-A-238	(Rev B) Seat, Water Closet
CID A-A-240	(Basic) Shower Head, Ball Joint

COPPER DEVELOPMENT ASSOCIATION (CDA)

CDA 404/O-RR	(1992) Copper Tube for Plumbing, Heating, Air Conditioning and Refrigeration

COUNCIL OF AMERICAN BUILDING OFFICIALS (CABO)

CABO A117.1	(1992; Errata Jun 1993) American National Standard for Accessible and Usable buildings and Facilities

FEDERAL SPECIFICATIONS (FS)

FS QQ-B-654	(Rev A; Am 1; Notice 1) Brazing Alloys, Silver
FS TT-P-1536	(Rev A) Plumbing Fixture Setting Compound
FS WW-C-440	(Rev B; Am 2) Clamps, Hose, (Low-Pressure)
FS WW-P-541/GEN	(Rev E; Am 1) Plumbing Fixtures
FS WW-P-541/4	(Rev B; Am 1) Plumbing Fixtures (Lavatories)
FS WW-P-541/5	(Rev B; Am 1) Plumbing Fixtures (Sinks, Kitchen, Service, and Laundry Trays)
FS WW-P-541/9	(Rev B; Am 1) Plumbing Fixtures (Medical Facilities, Land Use)
FS WW-V-35	(Rev C) Valve, Ball

FOUNDATION FOR CROSS-CONNECTION CONTROL AND HYDRAULIC RESEARCH (FCCHR)

FCCHR-01 (1993) Manual of Cross-Connection Control

HYDRAULIC INSTITUTE (HI)

HI-01 (1983) Standards for Centrifugal, Rotary & Reciprocating Pumps

MANUFACTURERS STANDARDIZATION SOCIETY OF THE VALVE AND FITTINGS INDUSTRY (MSS)

MSS SP-25 (1993) Standard Marking System for Valves, Fittings, Flanges and Unions

MSS SP-58 (1993) Pipe Hangers and Supports - Materials, Design and Manufacture

MSS SP-67 (1990) Butterfly Valves

MSS SP-69 (1991) Pipe Hangers and Supports - Selection and Application

MSS SP-70 (1990) Cast Iron Gate Valves, Flanged and Threaded Ends

MSS SP-71 (1990) Cast Iron Swing Check Valves, Flanges and Threaded Ends

MSS SP-72 (1992) Ball Valves with Flanged or Butt-welding Ends for General Service

MSS SP-73 (1991) Brazing Joints for Copper and Copper Alloy Pressure Fittings

MSS SP-78 (1987; R 1992) Cast Iron Plug Valves, Flanged and Threaded Ends

MSS SP-80 (1987) Bronze Gate, Globe, Angle and Check Valves

MSS SP-84 (1990) Valves - Socket Welding and Threaded Ends

MSS SP-85 (1994) Cast Iron Globe & Angle Valves Flanged and Threaded Ends

NATIONAL ASSOCIATION OF PLUMBING-HEATING-COOLING CONTRACTORS (NAPHCC)

NAPHCC-01 (1993; Supple 1994) National Standard Plumbing Code (Non-Illustrated Edition)

NAPHCC-02 (1993) National Standard Plumbing Code Illustrated Edition

NATIONAL ELECTRICAL MANUFACTURERS ASSOCIATION (NEMA)

NEMA 250 (1991) Enclosures for Electrical Equipment (1000 Volts Maximum)

NATIONAL FIRE PROTECTION ASSOCIATION (NFPA)

NFPA 54 (1992) National Fuel Gas Code

NFPA 90A (1993) Installation of Air Conditioning and Ventilating Systems

NSF INTERNATIONAL (NSF)

NSF Std 14 (1965; Rev Nov 1990) Plastics Piping Components and Related Materials

PLASTIC PIPE AND FITTINGS ASSOCIATION (PPFA)

PPFA-01 (1991) Plastic Pipe in Fire Resistive Construction

PLUMBING AND DRAINAGE INSTITUTE (PDI)

PDI WH 201 (1992) Water Hammer Arresters

1.2 STANDARD PRODUCTS: Specified materials and equipment shall be standard products of a manufacturer regularly engaged in the manufacture of such products. Specified equipment shall essentially duplicate equipment that has performed satisfactorily at least two years prior to bid opening.

1.3 PERFORMANCE REQUIREMENTS

1.3.1 Welding: Piping shall be welded in accordance with qualified procedures using performance-qualified welders and welding operators. Procedures and welders shall be qualified in accordance with ASME BPV IX. Welding procedures qualified by others, and welders and welding operators qualified by another employer, may be accepted as permitted by ASME B31.1. The Contracting Officer shall be notified 24 hours in advance of tests, and the tests shall be performed at the work site if practicable. Welders or welding operators shall apply their assigned symbols near each weld they make as a permanent record. Structural members shall be welded in accordance with Section 05055 WELDING, STRUCTURAL.

1.4 ELECTRICAL WORK: Motors, motor controllers and motor efficiencies shall conform to the requirements of Section 16415 ELECTRICAL WORK, INTERIOR. Electrical motor-driven equipment specified herein shall be provided complete with motors. Equipment shall be rated at 60 Hz, single phase, ac unless otherwise indicated. Where a motor controller is not provided in a motor-control center on the electrical drawings, a motor controller shall be as indicated. Motor controllers shall be provided complete with properly sized thermal-overload protection in each ungrounded conductor, auxiliary contact, and other equipment, at the specified capacity, and including an allowable service factor.

1.5 SUBMITTALS: Government approval is required for submittals with a "GA" designation; submittals having an "FIO" designation are for information only. The following shall be submitted in accordance with Section 01300 SUBMITTAL PROCEDURES:

SD-01 Data

Welding; GA.

A copy of qualified procedures and a list of names and identification symbols of qualified welders and welding operators.

Vibration-Absorbing Features; FIO.

Details of vibration-absorbing features, including arrangement, foundation plan, dimensions and specifications.

SD-04 Drawings

Plumbing System; GA.

Detail drawings consisting of illustrations, schedules, performance charts, instructions, brochures, diagrams, and other information to illustrate the requirements and operations of each system. Detail drawings for the complete plumbing system including piping layouts and locations of connections; dimensions for roughing-in, foundation, and support points; schematic diagrams and wiring diagrams or connection and interconnection diagrams. Detail drawings shall indicate clearances required for maintenance and operation. Where piping and equipment are to be supported other than as indicated, details shall include loadings and proposed support methods. Mechanical drawing plans, elevations, views, and details, shall be drawn to scale.

Electrical Schematics; GA.

Complete electrical schematic lineless or full line interconnection and connection diagram for each piece of mechanical equipment having more than one automatic or manual electrical control device.

SD-06 Instructions

Plumbing System; GA.

Diagrams, instructions, and other sheets proposed for posting. Manufacturer's recommendations for the installation of bell and spigot and hubless joints for cast iron soil pipe.

SD-09 Reports

Tests, Flushing and Sterilization; FIO.

Test reports in booklet form showing all field tests performed to adjust each component and all field tests performed to prove compliance with the specified performance criteria, completion and testing of the installed system. Each test report shall indicate the final position of controls.

SD-13 Certificates

Materials and Equipment; GA.

Where materials or equipment are specified to comply with requirements of AGA, or ASME, proof of such compliance. The label or listing of the specified agency will be acceptable evidence. In lieu of the label or listing, a written certificate may be submitted from an approved, nationally recognized testing organization equipped to perform such services, stating that the items have been tested and conform to the requirements and testing methods of the specified agency. Where equipment is specified to conform to requirements of the ASME Boiler and Pressure Vessel Code, the design, fabrication, and installation shall conform to the code.

Bolts; FIO.

Written certification by the bolt manufacturer that the bolts furnished comply with the specified requirements. The certification shall include illustrations of product-required markings, the date of manufacture, and the number of each type of bolt to be furnished based on this certification.

SD-19 Operation and Maintenance Manuals

Plumbing System

Six copies of the operation manual outlining the step-by-step procedures required for system startup, operation and shutdown. The manual shall include the manufacturer's name, model number, service

manual, parts list, and brief description of all equipment and their basic operating features. Six copies of the maintenance manual listing routine maintenance procedures, possible breakdowns and repairs. The manual shall include piping and equipment layout and simplified wiring and control diagrams of the system as installed.

1.6 REGULATORY REQUIREMENTS

1.6.1 Plumbing: Plumbing work shall be in accordance with NAPHCC-01, unless otherwise stated and installed in accordance with NAPHCC-02.

1.7 PROJECT/SITE CONDITIONS: The Contractor shall become familiar with details of the work, verify dimensions in the field, and advise the Contracting Officer of any discrepancy before performing any work.

PART 2 PRODUCTS

2.1 MATERIALS: Materials for various services shall be in accordance with TABLES I and II. Pipe schedules shall be selected based on service requirements. Pipe fittings shall be compatible with the applicable pipe materials. Plastic pipe, fittings, and solvent cement shall meet NSF Std 14 and shall be NSF listed for the service intended. Plastic pipe, fittings, and solvent cement used for potable hot and cold water service shall bear the NSF seal "NSF-PW." Polypropylene pipe and fittings shall conform to dimensional requirements of Schedule 40, Iron Pipe size. Pipe threads (except dry seal) shall conform to ASME B1.20.1. Grooved pipe couplings and fittings shall be from the same manufacturer. Material or equipment containing lead shall not be used in any potable water system. Hubless cast-iron soil pipe shall not be installed under concrete floor slabs or in crawl spaces below kitchen floors. Plastic pipe shall not be installed under concrete floor slabs, or in air plenums. Plastic pipe shall not be installed in a pressure piping system in buildings greater than three stories including any basement levels.

2.1.1 Pipe Joint Materials: Grooved pipe shall not be used under ground. Joints and gasket materials shall conform to the following:

a. Coupling for Cast-Iron Pipe: ASTM A 74, AWWA C606.

b. Coupling for Steel Pipe: AWWA C606.

c. Couplings for Grooved Pipe: Ductile Iron ASTM A 536 (Grade 65-45-12) or Malleable Iron ASTM A 47, Grade 32510. Copper ASTM A 536.

d. Flange Gaskets: Gaskets shall be made of non-asbestos material in accordance with ASME B16.21. Gaskets shall be flat, 1/16 inch thick, and contain Aramid fibers bonded with Styrene Butadiene Rubber (SBR) or Nitro Butadiene Rubber (NBR). Gaskets shall be the full face or self centering flat ring type. Gaskets used for hydrocarbon service shall be bonded with NBR.

e. Neoprene Gaskets for Hub and Cast-Iron Pipe and Fittings: CISPI HSN.

f. Brazing Material: Brazing material shall conform to AWS A5.8, BCuP-5.

g. Brazing Flux: Flux shall be in paste or liquid form appropriate for use with brazing material. Flux shall be as follows: lead-free; have a 100 percent flushable residue; contain slightly acidic reagents; contain potassium borides; and contain fluorides. Silver brazing materials shall be in accordance with FS QQ-B-654.

h. Solder Material: Solder metal shall conform to ASTM B 32 95-5 tin-antimony.

i. Solder Flux: Flux shall be liquid form, non-corrosive, and conform to ASTM B 813, Standard Test 1.

j. Rubber Gaskets for Cast-Iron Soil-Pipe and Fittings: ASTM C 564.

k. Rubber Gaskets for Grooved Pipe: ASTM D 2000, maximum temperature 110 degrees C (230 degrees F).230 degrees F.

l. Flexible Elastomeric Seals: ASTM D 3139, ASTM D 3212 or ASTM F 477.

m. Bolts and Nuts for Grooved Pipe Couplings: Heat-treated carbon steel, ASTM A 183.

n. Solvent Cement for Transition Joints between ABS and PVC Nonpressure Piping Components: ASTM D 3138.

o. Flanged fittings including flanges, bolts, nuts, bolt patterns, etc. shall be in accordance with ASME B16.5 class 150 and shall have the manufacturer's trademark affixed in accordance with MSS SP-25. Flange material shall conform to ASTM A 105. Blind flange material shall conform to ASTM A 516 cold service and ASTM A 515 for hot service. Bolts shall be high strength or intermediate strength with material conforming to ASTM A 193.

2.1.2 Miscellaneous Materials: Miscellaneous materials shall conform to the following:

a. Water Hammer Arrester: PDI WH 201.

b. Copper, Sheet and Strip for Building Construction: ASTM B 370.

c. Asphalt Roof Cement: ASTM D 2822.

d. Hose Clamps: FS WW-C-440.

e. Supports for Off-The-Floor Plumbing Fixtures: ASME A112.6.1M.

f. Metallic Cleanouts: ASME A112.36.2M.

g. Plumbing Fixture Setting Compound: FS TT-P-1536, Type II.

h. Coal-Tar Protective Coatings and Linings for Steel Water Pipelines: AWWA C203.

i. Hypochlorites: AWWA B300.

j. Liquid Chlorine: AWWA B301.

k. Polyethylene Encasement for Ductile-Iron Piping: AWWA C105.

l. Gauges - Pressure and Vacuum Indicating Dial Type - Elastic Element: ASME B40.1.

m. Thermometers: ANSI SAMA Z236.1 .

2.1.3 Pipe Insulation Material: Insulation shall be as specified in Section 15250 THERMAL INSULATION FOR MECHANICAL SYSTEMS.

2.2 PIPE HANGERS, INSERTS, AND SUPPORTS: Pipe hangers, inserts, and supports shall conform to MSS SP-58 and MSS SP-69.

2.3 VALVES: Valves shall be provided on supplies to equipment and fixtures. Valves 2-1/2 inches and smaller shall be bronze with threaded bodies for pipe and solder-type connections for tubing. Valves 3 inches and larger shall have flanged iron bodies and bronze trim. Pressure ratings shall be based upon the application. Grooved end valves may be provided if the manufacturer certifies that the valves meet the performance requirements of applicable MSS standard. Valves shall conform to the following standards:

Description	Standard
Butterfly Valves	MSS SP-67
Cast-Iron Gate Valves, Flanged and Threaded Ends	MSS SP-70
Cast-Iron Swing Check Valves, Flanged and Threaded Ends	MSS SP-71
Ball Valves with Flanged Butt-Welding Ends for General Service	MSS SP-72
Ball Valves	FS WW-V-35
Cast-Iron Plug Valves, Flanged and Threaded Ends	MSS SP-78
Bronze Gate, Globe, Angle, and Check Valves	MSS SP-80
Steel Valves, Socket Welding and Threaded Ends	MSS SP-84
Cast-Iron Globe and Angle Valves, Flanged and Threaded Ends	MSS SP-85
Backwater Valves	ASME A112.14.1
Vacuum Relief Valves	ASSE 1001
Water Pressure Reducing Valves	ASSE 1003
Water Heater Drain Valves	ASSE 1005
Trap Seal Primer Valves	ASSE 1018
Temperature and Pressure Relief Valves for Hot Water Supply Systems	ANSI Z21.22
Temperature and Pressure Relief Valves for Automatically Fired Hot Water Boilers	ASME CSD-1 Safety Code No., Part CW, Article 5

2.3.1 Backwater Valves: Backwater valves shall be either separate from the floor drain or a combination floor drain, P-trap, and backwater valve, as shown. Valves shall have cast-iron bodies with cleanouts

large enough to permit removal of interior parts. Valves shall be of the flap type, hinged or pivoted, with revolving disks. Hinge pivots, disks, and seats shall be nonferrous metal. Disks shall be slightly open in a no-flow no-backwater condition. Cleanouts shall extend to finished floor and be fitted with threaded countersunk plugs.

2.3.2 Wall Faucets: Wall faucets with vacuum-breaker backflow preventer shall be brass with 3/4 inch male inlet threads, hexagon shoulder, and 3/4 inch hose connection. Faucet handle shall be securely attached to stem.

2.3.3 Lawn Faucets: Lawn faucets shall be brass, with either straight or angle bodies, and shall be of the compression type. Body flange shall be provided with internal pipe thread to suit 3/4 inch pipe. Body shall be suitable for wrench grip. Faucet spout shall have 3/4 inch exposed hose threads. Faucet handle shall be securely attached to stem.

2.3.4 Relief Valves: Water heaters and hot water storage tanks shall have a combination pressure and temperature (P&T) relief valve. The pressure relief element of a P&T relief valve shall have adequate capacity to prevent excessive pressure buildup in the system when the system is operating at the maximum rate of heat input. The temperature element of a P&T relief valve shall have a relieving capacity which is at least equal to the total input of the heaters when operating at their maximum capacity. Relief valves shall be rated according to ANSI Z21.22. Relief valves for systems where the maximum rate of heat input is less than 200,000 Btuh shall have 3/4 inch minimum inlets, and 3/4 inch outlets. Relief valves for systems where the maximum rate of heat input is greater than 200,000 Btuh shall have 1 inch minimum inlets, and 1 inch outlets. The discharge pipe from the relief valve shall be the size of the valve outlet.

2.4 FIXTURES: Fixtures shall be water conservation type, in accordance with NAPHCC-01. Fixtures for use by the physically handicapped shall be in accordance with CABO A117.1. Vitreous china, nonabsorbent, hard-burned, and vitrified throughout the body shall be provided. Porcelain enameled ware shall have specially selected, clear white, acid-resisting enamel coating evenly applied on surfaces. No fixture will be accepted that shows cracks, crazes, blisters, thin spots, or other flaws. Fixtures shall be equipped with appurtenances such as traps, faucets, stop valves, and drain fittings. Each fixture and piece of equipment requiring connections to the drainage system, except grease interceptors, shall be equipped with a trap. Brass expansion or toggle bolts capped with acorn nuts shall be provided for supports, and polished chromium-plated pipe, valves, and fittings shall be provided where exposed to view. Fixtures with the supply discharge below the rim shall be equipped with backflow preventers. Internal parts of flush and/or flushometer valves, shower mixing valves, shower head face plates, pop-up stoppers of lavatory waste drains, and pop-up stoppers and overflow tees and shoes of bathtub waste drains may contain acetal resin, fluorocarbon, nylon, acrylonitrile-butadiene-styrene (ABS) or other plastic material, if the material has provided satisfactory service under actual commercial or industrial operating conditions for not less than 2 years. Plastic in contact with hot water shall be suitable for 82 degrees C (180 degrees F)180 degrees F water temperature. Plumbing fixtures shall generally be in accordance with FS WW-P-541/GEN, and shall be as indicated in paragraph PLUMBING FIXTURE SCHEDULE.

2.4.1 Lavatories: Enameled cast-iron lavatories shall be provided with two cast-iron or steel brackets secured to the underside of the apron and drilled for bolting to the wall in a manner similar to the hanger plate. Exposed brackets shall be porcelain enameled. Vitreous china lavatories shall be provided with two integral molded lugs on the back-underside of the fixture and drilled for bolting to the wall in a manner similar to the hanger plate. Provide soap dispenser drilling on right side of ledge.

2.5 BACKFLOW PREVENTERS: Reduced pressure principle assemblies, double check valve assemblies, atmospheric (nonpressure) type vacuum breakers, and pressure type vacuum breakers shall be tested, approved, and listed in accordance with FCCHR-01. Backflow preventers with intermediate atmospheric vent shall conform to ASSE 1012. Reduced pressure principle backflow preventers shall conform to ASSE 1013. Hose connection vacuum breakers shall conform to ASSE 1011. Pipe applied

atmospheric type vacuum breakers shall conform to ASSE 1001. Air gaps in plumbing systems shall conform to ASME A112.1.2.

2.6 DRAINS

2.6.1 Floor and Shower Drains: Floor and shower drains shall consist of a galvanized body, integral seepage pan, and adjustable perforated or slotted chromium-plated bronze, nickel-bronze, or nickel-brass strainer, consisting of grate and threaded collar. Floor drains shall be cast iron except where metallic waterproofing membrane is installed. Drains shall be of double drainage pattern for embedding in the floor construction. The seepage pan shall have weep holes or channels for drainage to the drainpipe. The strainer shall be adjustable to floor thickness. A clamping device for attaching flashing or waterproofing membrane to the seepage pan without damaging the flashing or waterproofing membrane shall be provided when required. Drains shall be provided with threaded or caulked connection. In lieu of a caulked joint between the drain outlet and waste pipe, a neoprene rubber gasket conforming to ASTM C 564 may be installed, provided that the drain is specifically designed for the rubber gasket compression type joint. Floor and shower drains shall conform to ASME A112.21.1M.

2.6.1.1 Metallic Shower Pan Drains: Where metallic shower pan membrane is installed, polyethylene drain with corrosion-resistant screws securing the clamping device shall be provided. Polyethylene drains shall have fittings to adapt drain to waste piping. Polyethylene for floor drains shall conform to ASTM D 1248. Drains shall have separate cast-iron "P" trap, circular body, seepage pan, and strainer, unless otherwise indicated.

2.6.1.2 Drains and Backwater Valves: Drains and backwater valves installed in connection with waterproofed floors or shower pans shall be equipped with bolted-type device to securely clamp flashing.

2.6.2 Area Drains: Area drains shall be plain pattern with polished stainless steel perforated or slotted grate and bottom outlet. The drain shall be circular or square with a 12 inch nominal overall width or diameter and 10 inch nominal overall depth. Drains shall be cast iron with manufacturer's standard coating. Grate shall be easily lifted out for cleaning. Outlet shall be suitable for inside caulked connection to drain pipe. Drains shall conform to ASME A112.21.1M.

2.6.3 Floor Sinks: Floor sinks shall be square, with 12 inch nominal overall width or diameter and 10 inch nominal overall depth. Floor sink shall have an acid-resistant enamel interior finish with cast-iron body, aluminum sediment bucket, and perforated grate of cast iron in industrial areas and stainless steel in finished areas. The outlet pipe size shall be as indicated or of the same size as the connecting pipe.

2.6.4 Boiler Room Drains: Boiler room drains shall have combined drain and trap, hinged grate, removable bucket, and threaded brass cleanout with brass backwater valve. The removable galvanized cast-iron sediment bucket shall have rounded corners to eliminate fouling and shall be equipped with hand grips. Drain shall have a minimum water seal of 4 inches. The grate area shall be not less than 100 square inches.

Area of strainer and collar	36 square inches
Height of funnel	3-3/4 inches
Diameter of lower portion of funnel	2 inches
Diameter of upper portion of funnel	4 inches

2.7 SHOWER PAN: Shower pan may be copper, or nonmetallic material.

2.7.1 Sheet Copper: Sheet copper shall be 16 ounce weight.

2.7.2 Nonplasticized Polyvinyl Chloride (PVC) Shower Pan Material: Material shall consist of a plastic waterproofing membrane in sheet form. The material shall be 0.040 inch minimum thickness of nonplasticized PVC and shall have the following minimum properties:

a. ASTM D 638:

Ultimate Tensile Strength:	2600 psi
Ultimate Elongation:	398 percent
100 Percent Modulus	445 psi

b. ASTM D 1004:

Tear Strength	300 pounds per inch

c. ASTM E 96:

Permeance:	0.008 perms

d. Other Properties:

Specific Gravity:	1.29
PVC Solvent:	Weldable
Cold Crack:	-53 degrees F
Dimensional stability, 212 degrees F	minus 2.5 percent
Hardness, Shore A:	89

2.8 TRAPS: Unless otherwise specified, traps shall be plastic per ASTM F 409 or copper-alloy adjustable tube type with slip joint inlet and swivel. Traps shall be without a cleanout. Tubes shall be copper alloy with walls not less than 0.032 inch thick within commercial tolerances, except on the outside of bends where the thickness may be reduced slightly in manufacture by usual commercial methods. Inlets shall have rubber washer and copper alloy nuts for slip joints above the discharge level. Swivel joints shall be below the discharge level and shall be of metal-to-metal or metal-to-plastic type as required for the application. Nuts shall have flats for wrench grip. Outlets shall have internal pipe thread, except that when required for the application, the outlets shall have sockets for solder-joint connections. The depth of the water seal shall be not less than 2 inches. The interior diameter shall be not more than 1/8 inch over or under the nominal size, and interior surfaces shall be reasonably smooth throughout. A copper alloy "P" trap assembly consisting of an adjustable "P" trap and threaded trap wall nipple with cast brass wall flange shall be provided for lavatories. The assembly shall be a standard manufactured unit and may have a rubber-gasketed swivel joint.

2.9 WATER HEATER: Water heater types and capacities shall be as indicated. Each primary water heater shall have controls adjustable from 90 to 100 degrees F. Each booster water heater shall have controls adjustable from 120 to 160 degrees F. Hot water systems utilizing recirculation systems shall be tied into building off-hour controls. The thermal efficiencies and stand by heat losses shall conform to TABLE III as determined by ASHRAE 90.1 for each type of water heater specified. The only exception is that the storage capacity need not meet the standard loss requirement if the tank surface area is not insulated to R-12.5 and if a standing light is not used.

2.9.1 Automatic Storage Type: Heaters shall be complete with control system, temperature gauge, and pressure gauge, and shall have ASME rated combination pressure and temperature relief valve.

2.9.2 Gas-Fired Type: Gas-fired water heaters shall conform to ANSI Z21.10.1 when input is 75,000 Btu per hour or less or ANSI Z21.10.3 for heaters with input greater than 75,000 Btu per hour.

2.10 PUMPS

2.10.1 Circulating Pumps: Domestic hot water circulating pumps shall be electrically driven, single-stage, centrifugal, with mechanical seals, suitable for the intended service. Pump capacities, efficiencies, motor sizes, speeds, and impeller types shall be as shown. Pump and motor shall be supported by the piping on which it is installed. The shaft shall be one-piece, heat-treated, corrosion-resisting steel with impeller and smooth-surfaced housing of bronze. Motor shall be totally enclosed, fan-cooled and shall have sufficient wattage (horsepower) horsepower for the service required. Pump shall conform to HI-01. Each pump motor shall be equipped with an across-the-line magnetic controller in a NEMA 250, Type 1 enclosure with "START-STOP" switch in cover. Pump motors smaller than 746 W (Fractional horsepower pump motors)Fractional horsepower pump motors shall have integral thermal overload protection in accordance with Section 16415 ELECTRICAL WORK, INTERIOR. Guards shall shield exposed moving parts.

PART 3 EXECUTION

3.1 GENERAL INSTALLATION REQUIREMENTS: Neither hubless cast-iron nor plastic pipe shall be installed under concrete floor slabs. Piping located in air plenums shall conform to NFPA 90A requirements. Unprotected plastic pipe shall not be installed in air plenum. Installation of plastic pipe where in compliance with NFPA may be installed in accordance with PPFA-01. The plumbing system shall be installed complete with necessary fixtures, fittings, traps, valves, and accessories. Water and drainage piping shall be extended 5 feet outside the building, unless otherwise indicated. A gate valve or ball valve and drain shall be installed on the water service line inside the building approximately 6 inches above the floor from point of entry. Piping shall be connected to the exterior service lines or capped or plugged if the exterior service is not in place. Sewer and water pipes shall be laid in separate trenches, except when otherwise shown. Exterior underground utilities shall be at least 12 inches below the finish grade or as indicated on the drawings. If trenches are closed or the pipes are otherwise covered before being connected to the service lines, the location of the end of each plumbing utility shall be marked with a stake or other acceptable means. Valves shall be installed with control no lower than the valve body.

3.1.1 Water Pipe, Fittings, and Connections

3.1.1.1 Utilities: The piping shall be extended to fixtures, outlets, and equipment. The hot-water and cold-water piping system shall be arranged and installed to permit draining. The supply line to each item of equipment or fixture, except faucets, flush valves, or other control valves which are supplied with integral stops, shall be equipped with a shutoff valve to enable isolation of the item for repair and maintenance without interfering with operation of other equipment or fixtures. Supply piping to fixtures, faucets, hydrants, shower heads, and flushing devices shall be anchored to prevent movement.

3.1.1.2 Cutting and Repairing: The work shall be carefully laid out in advance, and unnecessary cutting of construction shall be avoided. Damage to building, piping, wiring, or equipment as a result of cutting shall be repaired by mechanics skilled in the trade involved.

3.1.1.3 Protection of Fixtures, Materials, and Equipment: Pipe openings shall be closed with caps or plugs during installation. Fixtures and equipment shall be tightly covered and protected against dirt, water, chemicals, and mechanical injury. Upon completion of the work, the fixtures, materials, and equipment shall be thoroughly cleaned, adjusted, and operated. Safety guards shall be provided for exposed rotating equipment.

3.1.1.4 Mains, Branches, and Runouts: Piping shall be installed as indicated. Pipe shall be accurately cut and worked into place without springing or forcing. Structural portions of the building shall not be weakened. Aboveground piping shall run parallel with the lines of the building, unless otherwise

indicated. Branch pipes from service lines may be taken from top, bottom, or side of main, using crossover fittings required by structural or installation conditions. Supply pipes, valves, and fittings shall be kept a sufficient distance from other work and other services to permit not less than 1/2 inch between finished covering on the different services. Bare and insulated water lines shall not bear directly against building structural elements so as to transmit sound to the structure or to prevent flexible movement of the lines. Water pipe shall not be buried in or under floors. Changes in pipe sizes shall be made with reducing fittings. Use of bushings will not be permitted except for use in situations in which standard factory fabricated components are furnished to accommodate specific excepted installation practice. Change in direction shall be made with fittings, except that bending of pipe 100 mm (4 inches)4 inches and smaller will be permitted, provided a pipe bender is used and wide sweep bends are formed. The center-line radius of bends shall be not less than six diameters of the pipe. Bent pipe showing kinks, wrinkles, flattening, or other malformations will not be acceptable.

3.1.1.5 Pipe Drains: Pipe drains indicated shall consist of 3/4 inch hose bibb with renewable seat and gate or ball valve ahead of hose bibb. At other low points, 3/4 inch brass plugs or caps shall be provided. Disconnection of the supply piping at the fixture is an acceptable drain.

3.1.1.6 Expansion and Contraction of Piping: Allowance shall be made throughout for expansion and contraction of water pipe. Each hot-water and hot-water circulation riser shall have expansion loops or other provisions such as offsets, changes in direction, etc., where indicated and/or required. Risers shall be securely anchored as required or where indicated to force expansion to loops. Branch connections from risers shall be made with ample swing or offset to avoid undue strain on fittings or short pipe lengths. Horizontal runs of pipe over 50 feet in length shall be anchored to the wall or the supporting construction about midway on the run to force expansion, evenly divided, toward the ends. Sufficient flexibility shall be provided on branch runouts from mains and risers to provide for expansion and contraction of piping. Flexibility shall be provided by installing one or more turns in the line so that piping will spring enough to allow for expansion without straining. If mechanical grooved pipe coupling systems are provided, the deviation from design requirements for expansion and contraction may be allowed pending approval of Contracting Officer.

3.1.1.7 Commercial-Type Water Hammer Arresters: Commercial-type water hammer arresters shall be provided on hot- and cold-water supplies and shall be located as generally indicated, with precise location and sizing to be in accordance with PDI WH 201. Water hammer arresters, where concealed, shall be accessible by means of access doors or removable panels. Commercial-type water hammer arresters shall conform to PDI WH 201. Vertical capped pipe columns will not be permitted.

3.1.2 Joints: Installation of pipe and fittings shall be made in accordance with the manufacturer's recommendations. Mitering of joints for elbows and notching of straight runs of pipe for tees will not be permitted. Joints shall be made up with fittings of compatible material and made for the specific purpose intended.

3.1.2.1 Threaded: Threaded joints shall have American Standard taper pipe threads conforming to ASME B1.20.1. Only male pipe threads shall be coated with graphite or with an approved graphite compound, or with an inert filler and oil, or shall have a polytetrafluoroethylene tape applied.

3.1.2.2 Mechanical Couplings: Grooved mechanical joints shall be prepared according to the coupling manufacturer's instructions. Pipe and groove dimensions shall comply with the tolerances specified by the coupling manufacturer. The diameter of grooves made in the field shall be measured using a "go/no-go" gauge, vernier or dial caliper, or narrow-land micrometer. Groove width and dimension of groove from end of the pipe shall be measured and recorded for each change in grooving tool setup to verify compliance with coupling manufacturer's tolerances. Grooved joints shall not be used in concealed locations.

3.1.2.3 Union and Flanged: Unions, flanges and mechanical couplings shall not be concealed in walls, ceilings, or partitions. Unions shall be used on pipe sizes 2-1/2 inches and smaller; flanges shall be used on pipe sizes 3 inches and larger.

3.1.2.4 Cast Iron Soil, Waste and Vent Pipe: Bell and spigot compression and hubless gasketed clamp joints for soil, waste and vent piping shall be installed per the manufacturer's recommendations.

3.1.2.5 Copper Tube and Pipe: The tube or fittings shall not be annealed when making connections. Connections shall be made with a multiflame torch.:

a. Brazed. Brazed joints shall be made in conformance with AWS B2.2, MSS SP-73, and CDA 404/O-RR with flux and are acceptable for line sizes. Copper to copper joints shall include the use of copper-phosphorus or copper-phosphorus-silver brazing metal without flux. Brazing of dissimilar metals (copper to bronze or brass) shall include the use of flux with either a copper-phosphorus, copper-phosphorus-silver or a silver brazing filler metal.

b. Soldered. Soldered joints shall be made with flux and are only acceptable for lines 2 inches and smaller. Soldered joints shall conform to ASME B31.5 and CDA 404/O-RR

c. Copper Tube Extracted Joint. An extracted mechanical joint may be made in copper tube. Joint shall be produced with an appropriate tool by drilling a pilot hole and drawing out the tube surface to form a collar having a minimum height of three times the thickness of the tube wall. To prevent the branch tube from being inserted beyond the depth of the extracted joint, dimpled depth stops shall be provided. Branch tube shall be notched for proper penetration into fitting to ensure a free flow joint. Extracted joints shall be brazed in accordance with NAPHCC-01 using B-Cup series filler metal in accordance with MSS SP-73. Soldered extracted joints will not be permitted.

3.1.3 Dissimilar Pipe Materials: Connections between ferrous and non-ferrous copper pipe shall be made with dielectric unions or flange waterways. Connecting joints between plastic and metallic pipe shall be made with transition fitting for the specific purpose.

3.1.4 Corrosion Protection for Buried Pipe and Fittings

3.1.4.1 Cast Iron and Ductile Iron: Pressure pipe shall have protective coating, a cathodic protection system, and joint bonding. Pipe, fittings, and joints shall have a protective coating. The protective coating shall be completely encasing polyethylene tube or sheet in accordance with AWWA C105. Joints and fittings shall be cleaned, coated with primer, and wrapped with tape. The pipe shall be cleaned, coated, and wrapped prior to pipe tightness testing. Joints and fittings shall be cleaned, coated, and wrapped after pipe tightness testing. Tape shall conform to AWWA C203 and shall be applied with a 50 percent overlap. Primer shall be as recommended by the tape manufacturer.

3.1.4.2 Steel: Steel pipe, joints, and fittings shall be cleaned, coated with primer, and wrapped with tape. Pipe shall be cleaned, coated, and wrapped prior to pipe tightness testing. Joints and fittings shall be cleaned, coated, and wrapped after pipe tightness testing. Tape shall conform to AWWA C203 and shall be applied with a 50 percent overlap. Primer shall be as recommended by the tape manufacturer.

3.1.5 Pipe Sleeves and Flashing: Pipe sleeves shall be furnished and set in their proper and permanent location.

3.1.5.1 Sleeve Requirements: Pipes passing through concrete or masonry walls or concrete floors or roofs shall be provided with pipe sleeves fitted into place at the time of construction. Sleeves are not required for cast-iron soil pipe passing through concrete slab on grade, except where penetrating a membrane waterproof floor. A modular mechanical type sealing assembly may be installed in lieu of a waterproofing clamping flange and caulking and sealing of annular space between pipe and sleeve. The

seals shall consist of interlocking synthetic rubber links shaped to continuously fill the annular space between the pipe and sleeve with corrosion-protected carbon steel bolts, nuts, and pressure plates. The links shall be loosely assembled with bolts to form a continuous rubber belt around the pipe with a pressure plate under each bolt head and each nut. After the seal assembly is properly positioned in the sleeve, tightening of the bolt shall cause the rubber sealing elements to expand and provide a watertight seal between the pipe and the sleeve. Each seal assembly shall be sized as recommended by the manufacturer to fit the pipe and sleeve involved. Sleeves shall not be installed in structural members, except where indicated or approved. Rectangular and square openings shall be as detailed. Each sleeve shall extend through its respective floor, or roof, and shall be cut flush with each surface, except for special circumstances. Pipe sleeves passing through floors in wet areas such as mechanical equipment rooms, lavatories, kitchens, and other plumbing fixture areas shall extend a minimum of 100 mm 4 inches above the finished floor. Unless otherwise indicated, sleeves shall be of a size to provide a minimum of 6 mm (1/4 inch)1/4 inch clearance between bare pipe and inside of sleeve or between jacket over insulation and sleeves. Sleeves in bearing walls shall be steel pipe or cast-iron pipe. Sleeves for membrane waterproof floors shall be steel pipe, cast-iron pipe, or plastic pipe. Membrane clamping devices shall be provided on pipe sleeves for waterproof floors. Sleeves in nonbearing walls or ceilings may be steel pipe, cast-iron pipe, galvanized sheet metal with lock-type longitudinal seam, or moisture-resistant fiber or plastic. Plastic sleeves shall not be used in nonbearing fire walls, roofs, or floor/ceilings. Except as otherwise specified, the annular space between pipe and sleeve, or between jacket over insulation and sleeve, shall be sealed as indicated with sealants conforming to ASTM C 920 and with a primer, backstop material and surface preparation. Pipes passing through sleeves in concrete floors over crawl spaces shall be sealed as specified above. The annular space between pipe and sleeve or between jacket over insulation and sleeve shall not be sealed for interior walls which are not designated as fire rated. Sleeves through below-grade walls in contact with earth shall be recessed 1/2 inch from wall surfaces on both sides. Annular space between pipe and sleeve shall be filled with backing material and sealants in the joint between the pipe and concrete masonry wall as specified above. Sealant selected for the earth side of the wall shall be compatible with dampproofing/waterproofing materials that are to be applied over the joint sealant.

3.1.5.2 Flashing Requirements: Pipes passing through roof or floor waterproofing membrane shall be installed through a 16 ounce copper flashing, each within an integral skirt or flange. Flashing shall be suitably formed, and the skirt or flange shall extend not less than 8 inches from the pipe and shall be set over the roof or floor membrane in a solid coating of bituminous cement. The flashing shall extend up the pipe a minimum of 10 inches. For cleanouts, the flashing shall be turned down into the hub and caulked after placing the ferrule. Pipes passing through pitched roofs shall be flashed, using lead or copper flashing, with an adjustable integral flange of adequate size to extend not less than 8 inches from the pipe in all directions and lapped into the roofing to provide a watertight seal. The annular space between the flashing and the bare pipe or between the flashing and the metal-jacket-covered insulation shall be sealed as indicated. Flashing for dry vents shall be turned down into the pipe to form a waterproof joint. Pipes, up to and including 10 inches in diameter, passing through roof or floor waterproofing membrane may be installed through a cast-iron sleeve with caulking recess, anchor lugs, flashing-clamp device, and pressure ring with brass bolts. Flashing shield shall be fitted into the sleeve clamping device. Pipes passing through wall waterproofing membrane shall be sleeved as described above. A waterproofing clamping flange shall be installed.

3.1.5.3 Waterproofing: Waterproofing at floor-mounted water closets shall be accomplished by forming a flashing guard from soft-tempered sheet copper. The center of the sheet shall be perforated and turned down approximately 1-1/2 inches to fit between the outside diameter of the drainpipe and the inside diameter of the cast-iron or steel pipe sleeve. The turned-down portion of the flashing guard shall be embedded in sealant to a depth of approximately 40 mm; 1-1/2 inches; then the sealant shall be finished off flush to floor level between the flashing guard and drainpipe. The flashing guard of sheet copper shall extend not less than 8 inches from the drainpipe and shall be lapped between the floor membrane in a solid coating of bituminous cement. If cast-iron water closet floor flanges are used, the space between the pipe sleeve and drainpipe shall be sealed with sealant and the flashing guard shall be

upturned approximately 1-1/2 inches to fit the outside diameter of the drainpipe and the inside diameter of the water closet floor flange. The upturned portion of the sheet fitted into the floor flange shall be sealed.

3.1.5.4 Optional Counterflashing: Instead of turning the flashing down into a dry vent pipe, or caulking and sealing the annular space between the pipe and flashing or metal-jacket-covered insulation and flashing, counterflashing may be accomplished by utilizing the following:

a. A standard roof coupling for threaded pipe up to 6 inches in diameter.

b. A tack-welded or banded-metal rain shield around the pipe.

3.1.5.5 Pipe Penetrations of Slab on Grade Floors: Where pipes, fixture drains, floor drains, cleanouts or similar items penetrate slab on grade floors, except at penetrations of floors with waterproofing membrane as specified in paragraphs Flashing Requirements and Waterproofing, a groove 1/4 to 1/2 inch wide by 1/4 to 3/8 inch deep shall be formed around the pipe, fitting or drain. The groove shall be filled with a sealant conforming to ASTM C 920.

3.1.6 Fire Seal: Where pipes pass through fire walls, fire-partitions, fire-rated pipe chase walls or floors above grade, a fire seal shall be provided as specified in Section 07270 FIRESTOPPING.

3.1.7 Supports

3.1.7.1 General: Hangers used to support piping 2 inches and larger shall be fabricated to permit adequate adjustment after erection while still supporting the load. Pipe guides and anchors shall be installed to keep pipes in accurate alignment, to direct the expansion movement, and to prevent buckling, swaying, and undue strain. Piping subjected to vertical movement when operating temperatures exceed ambient temperatures shall be supported by variable spring hangers and supports or by constant support hangers. In the support of multiple pipe runs on a common base member, a clip or clamp shall be used where each pipe crosses the base support member. Spacing of the base support members shall not exceed the hanger and support spacing required for an individual pipe in the multiple pipe run.

3.1.7.2 Pipe Supports and Structural Bracing, Seismic Requirements: Piping and attached valves shall be supported and braced to resist Zone 4 seismic loads. Structural steel required for reinforcement to properly support piping, headers, and equipment, but not shown, shall be provided. Material used for supports shall be as specified in Section 05120 STRUCTURAL STEEL.

3.1.7.3 Pipe Hangers, Inserts, and Supports: Installation of pipe hangers, inserts and supports shall conform to MSS SP-58 and MSS SP-69, except as modified herein.

a. Types 5, 12, and 26 shall not be used.

b. Type 3 shall not be used on insulated pipe.

c. Type 18 inserts shall be secured to concrete forms before concrete is placed. Continuous inserts which allow more adjustment may be used if they otherwise meet the requirements for type 18 inserts.

d. Type 19 and 23 C-clamps shall be torqued per MSS SP-69 and shall have both locknuts and retaining devices furnished by the manufacturer. Field-fabricated C-clamp bodies or retaining devices are not acceptable.

e. Type 20 attachments used on angles and channels shall be furnished with an added malleable-iron heel plate or adapter.

f. Type 24 may be used only on trapeze hanger systems or on fabricated frames.

g. Type 39 saddles shall be used on insulated pipe 4 inches and larger when the temperature of the medium is 15 degrees C60 degrees F or higher. Type 39 saddles shall be welded to the pipe.

h. Type 40 shields shall:

(1) Be used on insulated pipe less than 4 inches.

(2) Be used on insulated pipe 4 inches and larger when the temperature of the medium is 60 degrees F or less.

(3) Have a high density insert for pipe 2 inches and larger and for smaller pipe sizes when the insulation is suspected of being visibly compressed, or distorted at or near the shield/insulation interface. High density inserts shall have a density of 8 pcf or greater.

i. Horizontal pipe supports shall be spaced as specified in MSS SP-69 and a support shall be installed not over 1 foot from the pipe fitting joint at each change in direction of the piping. Pipe supports shall be spaced not over 5 feet apart at valves. Operating temperatures in determining hanger spacing for PVC or CPVC pipe shall be 120 degrees F for PVC and 180 degrees F for CPVC. Horizontal pipe runs shall include allowances for expansion and contraction.

j. Vertical pipe shall be supported at each floor, except at slab-on-grade, at intervals of not more than 15 feet nor more than 8 feet from end of risers, and at vent terminations. Vertical pipe risers shall include allowances for expansion and contraction.

k. Type 40 shields used on insulated pipe shall have high density inserts with a density of 8 pcf or greater.

l. Type 35 guides using steel, reinforced polytetrafluoroethylene (PTFE) or graphite slides shall be provided to allow longitudinal pipe movement. Slide materials shall be suitable for the system operating temperatures, atmospheric conditions, and bearing loads encountered. Lateral restraints shall be provided as needed. Where steel slides do not require provisions for lateral restraint the following may be used:

(1) On pipe 4 inches and larger when the temperature of the medium is 60 degrees F or higher, a Type 39 saddle, welded to the pipe, may freely rest on a steel plate.

(2) On pipe less than 4 inches a Type 40 shield, attached to the pipe or insulation, may freely rest on a steel plate.

(3) On pipe 4 inches and larger carrying medium less that 60 degrees F a Type 40 shield, attached to the pipe or insulation, may freely rest on a steel plate.

m. Pipe hangers on horizontal insulated pipe shall be the size of the outside diameter of the insulation. The insulation shall be continuous through the hanger on all pipe sizes and applications.

n. Where there are high system temperatures and welding to piping is not desirable, the type 35 guide shall include a pipe cradle, welded to the guide structure and strapped securely to the pipe. The pipe shall be separated from the slide material by at least 4 inches or by an amount adequate for the insulation, whichever is greater.

o. Hangers and supports for plastic pipe shall not compress, distort, cut or abrade the piping, and shall allow free movement of pipe except where otherwise required in the control of expansion/contraction.

3.1.8 Welded Installation: Plumbing pipe weldments shall be as indicated. Changes in direction of piping shall be made with welding fittings only; mitering or notching pipe to form elbows and tees or other similar type construction will not be permitted. Branch connection may be made with either welding tees or forged branch outlet fittings. Branch outlet fittings shall be forged, flared for improvement of flow where attached to the run, and reinforced against external strains. Beveling, alignment, heat treatment, and inspection of weld shall conform to ASME B31.1. Weld defects shall be removed and repairs made to the weld, or the weld joints shall be entirely removed and rewelded. After filler metal has been removed from its original package, it shall be protected or stored so that its characteristics or welding properties are not affected. Electrodes that have been wetted or that have lost any of their coating shall not be used.

3.1.9 Pipe Cleanouts: Pipe cleanouts shall be the same size as the pipe except that cleanout plugs larger than 4 inches will not be required. A cleanout installed in connection with cast-iron soil pipe shall consist of a long-sweep 1/4 bend or one or two 1/8 bends extended to the place shown. An extra-heavy cast-brass or cast-iron ferrule with countersunk cast-brass head screw plug shall be caulked into the hub of the fitting and shall be flush with the floor. Cleanouts in connection with other pipe, where indicated, shall be T-pattern, 90-degree branch drainage fittings with cast-brass screw plugs, except plastic plugs shall be installed in plastic pipe. Plugs shall be the same size as the pipe up to and including 4 inches. Cleanout tee branches with screw plug shall be installed at the foot of soil and waste stacks, at the foot of interior downspouts, on each connection to building storm drain where interior downspouts are indicated, and on each building drain outside the building. Cleanout tee branches may be omitted on stacks in single story buildings with slab-on-grade construction or where less than 18 inches of crawl space is provided under the floor. Cleanouts on pipe concealed in partitions shall be provided with chromium plated bronze, nickel bronze, nickel brass or stainless steel flush type access cover plates. Round access covers shall be provided and secured to plugs with securing screw. Square access covers may be provided with matching frames, anchoring lugs and cover screws. Cleanouts in finished walls shall have access covers and frames installed flush with the finished wall. Cleanouts installed in finished floors subject to foot traffic shall be provided with a chrome-plated cast brass, nickel brass, or nickel bronze cover secured to the plug or cover frame and set flush with the finished floor. Heads of fastening screws shall not project above the cover surface. Where cleanouts are provided with adjustable heads, the heads shall be cast iron.

3.2 WATER HEATERS AND HOT WATER STORAGE TANKS

3.2.1 Relief Valves: No valves shall be installed between a relief valve and its water heater or storage tank. The P&T relief valve shall be installed where the valve actuator comes in contact with the hottest water in the heater. Whenever possible, the relief valve shall be installed directly in a tapping in the tank or heater; otherwise, the P&T valve shall be installed in the hot-water outlet piping. A vacuum relief valve shall be provided on the cold water supply line to the hot-water storage tank or water heater and mounted above and within 6 inches above the top of the tank or water heater.

3.2.2 Installation of Gas-Fired Water Heater: Installation shall conform to NFPA 54 for gas fired. Storage water heaters that are not equipped with integral heat traps and having vertical pipe risers shall be installed with heat traps directly on both the inlet and outlet. Circulating systems need not have heat traps installed. An acceptable heat trap may be a piping arrangement such as elbows connected so that the inlet and outlet piping make vertically upward runs of not less than 24 inches just before turning downward or directly horizontal into the water heater's inlet and outlet fittings. Commercially available heat traps, specifically designed by the manufacturer for the purpose of effectively restricting the natural tendency of hot water to rise through vertical inlet and outlet piping during standby periods may also be approved.

3.2.3 Connections to Water Heaters: Connections of metallic pipe to water heaters shall be made with dielectric unions or flanges.

3.3 FIXTURES AND FIXTURE TRIMMINGS: Angle stops, straight stops, stops integral with the faucets, or concealed type of lock-shield, and loose-key pattern stops for supplies with threaded, sweat or solvent weld inlets shall be furnished and installed with fixtures. Where connections between copper tubing and faucets are made by rubber compression fittings, a beading tool shall be used to mechanically deform the tubing above the compression fitting. Exposed traps and supply pipes for fixtures and equipment shall be connected to the rough piping systems at the wall, unless otherwise specified under the item. Floor and wall escutcheons shall be as specified. Drain lines and hot water lines of fixtures for handicapped personnel shall be insulated and do not require polished chrome finish. Plumbing fixtures and accessories shall be installed within the space shown.

3.3.1 Fixture Connections: Where space limitations prohibit standard fittings in conjunction with the cast-iron floor flange, special short-radius fittings shall be provided. Connections between earthenware fixtures and flanges on soil pipe shall be made gastight and watertight with a closet-setting compound or neoprene gasket and seal. Use of natural rubber gaskets or putty will not be permitted. Fixtures with outlet flanges shall be set the proper distance from floor or wall to make a first-class joint with the closet-setting compound or gasket and fixture used.

3.3.2 Flushometer Valves: Flushometer valves shall be secured to prevent movement by anchoring the long finished top spud connecting tube to wall adjacent to valve with approved metal bracket. Flushometer valves for water closets shall be installed 39 inches above the floor. Bumpers for water closet seats shall be installed on the wall.

3.3.3 Height of Fixture Rims Above Floor: Lavatories shall be mounted with rim 31 inches above finished floor. Wall-hung drinking fountains and water coolers shall be installed with rim 42 inches above floor. Wall-hung service sinks shall be mounted with rim 28 inches above the floor. Installation of fixtures for use by the physically handicapped shall be in accordance with CABO A117.1.

3.3.4 Shower Bath Outfits: The area around the water supply piping to the mixing valves and behind the escutcheon plate shall be made watertight by caulking or gasketing.

3.3.5 Fixture Supports: Fixture supports for off-the-floor lavatories, urinals, water closets, and other fixtures of similar size, design, and use, shall be of the chair-carrier type. The carrier shall provide the necessary means of mounting the fixture, with a foot or feet to anchor the assembly to the floor slab. Adjustability shall be provided to locate the fixture at the desired height and in proper relation to the wall. Support plates, in lieu of chair carrier, shall be fastened to the wall structure only where it is not possible to anchor a floor-mounted chair carrier to the floor slab.

3.3.5.1 Support for Solid Masonry Construction: Chair carrier shall be anchored to the floor slab. Where a floor-anchored chair carrier cannot be used, a suitable wall plate shall be imbedded in the masonry wall.

3.3.5.2 Support for Cellular-Masonry Wall Construction: Chair carrier shall be anchored to floor slab. Where a floor-anchored chair carrier cannot be used, a suitable wall plate shall be fastened to the cellular wall using through bolts and a back-up plate.

3.3.5.3 Support for Steel Stud Frame Partitions: Chair carrier shall be used. The anchor feet and tubular uprights shall be of the heavy duty design; and feet (bases) shall be steel and welded to a square or rectangular steel tube upright. Wall plates, in lieu of floor-anchored chair carriers, shall be used only if adjoining steel partition studs are suitably reinforced to support a wall plate bolted to these studs.

3.3.5.4 Wall-Mounted Water Closet Gaskets: Where wall-mounted water closets are provided, reinforced wax, treated felt, or neoprene gaskets shall be provided. The type of gasket furnished shall be as recommended by the chair-carrier manufacturer.

3.3.6 Backflow Prevention Devices: Plumbing fixtures, equipment, and pipe connections shall not cross connect or interconnect between a potable water supply and any source of nonpotable water. The backflow prevention device shall be installed where indicated and located so that no part of the device will be submerged. Access shall be provided for maintenance and testing. Each device shall be a standard commercial unit.

3.3.7 Access Panels: Access panels shall be provided for concealed valves and controls, or any item requiring inspection or maintenance. Access panels shall be of sufficient size and located so that the concealed items may be serviced, maintained, or replaced. Access panels shall be as specified in Section 05500 MISCELLANEOUS METAL.

3.3.8 Sight Drains: Sight drains shall be installed so that the indirect waste will terminate 2 inches above the flood rim of the funnel to provide an acceptable air gap.

3.3.9 Traps: Each trap shall be placed as near the fixture as possible, and no fixture shall be double-trapped. Traps installed on cast-iron soil pipe shall be cast iron. Traps installed on steel pipe or copper tubing shall be recess-drainage pattern, or brass-tube type. Traps installed on plastic pipe may be plastic conforming to ASTM D 3311. Traps for acid-resisting waste shall be of the same material as the pipe.

3.3.10 Shower Pans: Before installing shower pan, subfloor shall be free of projections such as nail heads or rough edges of aggregate. Drain shall be a bolt-down, clamping-ring type with weepholes, installed so the lip of the subdrain is flush with subfloor.

3.3.10.1 General: The floor of each individual shower, the shower-area portion of combination shower and drying room, and the entire shower and drying room where the two are not separated by curb or partition, shall be made watertight with a shower pan fabricated in place. The shower pan material shall be cut to size and shape of the area indicated, in one piece to the maximum extent practicable, allowing a minimum of 6 inches for turnup on walls or partitions, and shall be folded over the curb with an approximate return of 1/4 of curb height. The upstands shall be placed behind any wall or partition finish. Subflooring shall be smooth and clean, with nailheads driven flush with surface, and shall be sloped to drain. Shower pans shall be clamped to drains with the drain clamping ring.

3.3.10.2 Metal Shower Pans: When a shower pan of required size cannot be furnished in one piece, metal pieces shall be joined with a flatlock seam and soldered or burned. The corners shall be folded, not cut, and the corner seam shall be soldered or burned. Pans, including upstands, shall be coated on all surfaces with one brush coat of asphalt. Asphalt shall be applied evenly at not less than 1 gallon per 50 square feet. A layer of felt covered with building paper shall be placed between shower pans and wood floors. The joining surfaces of metal pan and drain shall be given a brush coat of asphalt after the pan is connected to the drain.

3.3.10.3 Nonplasticized Polyvinyl Chloride (PVC) Shower Pans: Nonplasticized PVC shall be turned up behind walls or wall surfaces a distance of not less than 150 mm 6 inches in room areas and 3 inches above curb level in curbed spaces with sufficient material to fold over and fasten to outside face of curb. Corners shall be pig-ear type and folded between pan and studs. Only top 1 inch of upstand shall be nailed to hold in place. Nails shall be galvanized large-head roofing type. Approved duct tape shall be used on metal framing or studs to secure pig-ear fold and membrane. Where no backing is provided between studs, the membrane slack shall be taken up by pleating and stapling or nailing to studding at top inch of upstand. To adhere the membrane to vertical surfaces, the back of the membrane and the surface to which it is to be applied shall be coated with adhesive that becomes dry to the touch in 5 to 10 minutes, after which the membrane shall be pressed into place. Trim for drain shall be exactly the size of drain

opening. Bolt holes shall be pierced to accommodate bolts with a tight fit. Adhesive shall be used between pan and subdrain. Clamping ring shall be bolted firmly. A small amount of gravel or porous materials shall be placed at weepholes so that holes remain clear when setting bed is poured. Membrane shall be solvent welded with PVC solvent cement. Surfaces to be solvent welded shall be clean (free of grease and grime). Sheets shall be laid on a flat surface with an overlap of about 2 inches. Top edge shall be folded back and surface primed with a PVC primer. PVC cement shall be applied and surfaces immediately placed together, while still wet. Joint shall be lightly rolled with a paint roller, then as the joint sets shall be rolled firmly but not so hard as to distort the material. In long lengths, about 2 or 3 feet at a time shall be welded. On wood subflooring, two layers of 15 pound felt shall be installed prior to installation of shower pan to ensure a smooth surface installation.

3.4 VIBRATION-ABSORBING FEATURES: Mechanical equipment, including compressors and pumps, shall be isolated from the building structure by approved vibration-absorbing features, unless otherwise shown. Each foundation shall include an adequate number of standard isolation units. Each unit shall consist of machine and floor or foundation fastening, together with intermediate isolation material, and shall be a standard product with printed load rating. Piping connected to mechanical equipment shall be provided with flexible connectors. Isolation unit installation shall limit vibration to 5 percent of the lowest equipment rpm.

3.5 WATER METER REMOTE READOUT REGISTER: The remote readout register shall be mounted at the location indicated or as directed by the Contracting Officer.

3.6 IDENTIFICATION SYSTEMS

3.6.1 Identification Tags: Identification tags made of brass, engraved laminated plastic, or engraved anodized aluminum, indicating service and valve number shall be installed on valves, except those valves installed on supplies at plumbing fixtures. Tags shall be 1-3/8 inch minimum diameter, and marking shall be stamped or engraved. Indentations shall be black, for reading clarity. Tags shall be attached to valves with No. 12 AWG, copper wire, chrome-plated beaded chain, or plastic straps designed for that purpose.

3.6.2 Color Coding: Color coding for piping identification shall be as specified in Section 09900 PAINTING, GENERAL.

3.7 ESCUTCHEONS: Escutcheons shall be provided at finished surfaces where bare or insulated piping, exposed to view, passes through floors, walls, or ceilings, except in boiler, utility, or equipment rooms. Escutcheons shall be fastened securely to pipe or pipe covering and shall be satin-finish, corrosion-resisting steel, polished chromium-plated zinc alloy, or polished chromium-plated copper alloy. Escutcheons shall be either one-piece or split-pattern, held in place by internal spring tension or setscrew.

3.8 PAINTING: Painting of pipes, hangers, supports, and other iron work, either in concealed spaces or exposed spaces, is specified in Section 09900 PAINTING, GENERAL.

3.9 TESTS, FLUSHING, AND STERILIZATION

3.9.1 Plumbing System: The plumbing system shall be tested in accordance with NAPHCC-01.

3.9.1.1 Shower Pans: After installation of the pan and finished floor, the drain shall be temporarily plugged below the weep holes. The floor area shall be flooded with water to a minimum depth of 25 mm 1 inch for a period of 24 hours. Any drop in the water level during test, except for evaporation, will be reason for rejection, repair, and retest.

3.9.2 Phenolic Resin Coatings

3.9.2.1 Test Panels: Steel test panel substrate shall be 0.607 mm (24 gauge)24 gauge in thickness. The panels shall be coated with one coat wash primer, then pigmented baking phenolic to a dry film thickness of 4 to 6 mil, then clear baking phenolic to a total dry film thickness of 5 to 7 mil. The panels shall then be subjected to the tests specified below:

a. Heat Test: Test panel shall be minimum 2-3/4 x 5-7/8 inches in size. A coated test panel shall show no cracking, flaking, or other failure after the panel has been tested in accordance with ASTM D 2485, with a furnace temperature of 400 degrees F.

b. Abrasion Test: A coated test panel shall show no more than a 40 milligram loss when tested in accordance with ASTM D 4060, utilizing a Tabor Abraser CS-17F wheel with a 1000 g weight for 1000 cycles.

c. Corrosion Test: A coated test panel shall show no corrosion after being subjected to a 500 hour salt spray test in accordance with ASTM B 117.

3.9.3 Defective Work: If inspection or test shows defects, such defective work or material shall be replaced or repaired as necessary and inspection and tests shall be repeated. Repairs to piping shall be made with new materials. Caulking of screwed joints or holes will not be permitted.

3.9.4 System Flushing: After tests are completed, potable water piping shall be flushed. In general, sufficient water shall be used to produce a minimum water velocity of 2.5 feet per second through piping being flushed. Flushing shall be continued until discharge water shows no discoloration. System shall be drained at low points. Strainer screens shall be removed, cleaned, and replaced in line. After flushing and cleaning, systems shall be prepared for service by immediately filling water piping with clean, fresh potable water. Any stoppage, discoloration, or other damage to the finish, furnishings, or parts of the building due to the Contractor's failure to properly clean the piping system shall be repaired by the Contractor. When the work is complete, the hot-water system shall be adjusted for uniform circulation. Flushing devices and automatic control systems shall be adjusted for proper operation.

3.9.5 Operational Test: Upon completion of and prior to acceptance of the installation, the Contractor shall subject the plumbing system to operating tests to demonstrate satisfactory functional and operational efficiency. Such operating tests shall cover a period of not less than 8 hours for each system and shall include the following information in a report with conclusion as to the adequacy of the system:

a. Time, date, and duration of test.

b. Water pressures at the most remote and the highest fixtures.

c. Operation of each fixture and fixture trim.

d. Operation of each valve, hydrant, and faucet.

e. Pump suction and discharge pressures.

f. Temperature of each domestic hot-water supply.

g. Operation of each floor and roof drain by flooding with water.

h. Operation of each vacuum breaker and backflow preventer.

3.9.6 Sterilization: After pressure tests have been made, the entire domestic hot- and cold-water distribution system shall be sterilized. System shall be thoroughly flushed with water of sufficient velocity until all entrained dirt and other foreign material have been removed, before introducing chlorinating

material. The chlorinating material shall be hypochlorites or liquid chlorine. Water chlorination procedure shall be in accordance with AWWA M20. The chlorinating material shall be fed into the water piping system at a constant rate at a concentration of at least 50 parts per million (ppm). A properly adjusted hypochlorite solution injected into the main with a hypochlorinator, or liquid chlorine injected into the main through a solution-feed chlorinator and booster pump, shall be used. The chlorine residual shall be checked at intervals to ensure that the proper level is maintained. Chlorine application shall continue until the entire main is filled. The water shall remain in the system for a minimum of 24 hours. Each valve in the system being sterilized shall be opened and closed several times during the contact period to ensure its proper disinfection. Following the 24-hour period, no less than 25 ppm chlorine residual shall remain in the system. Water tanks shall be disinfected by the addition of chlorine directly to the filling water. Following a 6 hour period, no less than 50 ppm chlorine residual shall remain in the tank. The system including the tanks shall then be flushed with clean water until the residual chlorine is reduced to less than one part per million. During the flushing period each valve and faucet shall be opened and closed several times. From several points in the system the Contracting Officer will take samples of water in properly sterilized containers for bacterial examination. The samples of water shall be tested for total coliform organisms (coliform bacteria, fecal coliform, streptococcal, and other bacteria) in accordance with AWWA-01. The testing method used shall be either the multiple-tube fermentation technique or the membrane-filter technique. The sterilizing shall be repeated until tests indicate the absence of coliform organisms (zero mean coliform density per 100 milliliters) in the samples for at least 2 full days. The system will not be accepted until satisfactory bacteriological results have been obtained.

3.10 PLUMBING FIXTURE SCHEDULE

WC-1 WATER CLOSET:

Siphon-jet, elongated bowl, top supply spud, ASME A112.19.2M, wall mounted.

Gasket shall be wax type.

Seat - CID A-A-238, Type A, white plastic, elongated, open front.

Flushometer Valve - ASSE 1037, large diaphragm type with non-hold-open feature, backcheck angle control stop, and vacuum breaker. Minimum upper chamber inside diameter of not less 2-5/8 inches at the point where the diaphragm is sealed between the upper and lower chambers. The maximum water use shall be 6 liters 1.6 gallons per flush.

WC-2 WATER CLOSET HANDICAPPED:

Top rim of bowl shall be 18 inches above the floor; other features are the same as P-1.

UR-1 URINAL:

Wall hanging, with integral trap and extended shields, ASME A112.19.2M siphon jet. Top supply connection, back outlet.

Flushometer Valve - Similar to Flushometer Valve for WC-1. The maximum water use shall be 1 gallon per flush.

UR-2 URINAL HANDICAPPED

Same as UR-1, except for ADA compliance.

L-2 LAVATORY:

Manufacturer's standard sink depth, FS WW-P-541/4, vitreous china, ledge back with soap dispenser drilling on right side.

Faucet - Faucets shall be single control, mixing type. Faucets shall have metal replaceable cartridge control unit or metal cartridge units with diaphragm which can be replaced without special tools. Valves and handles shall be copper alloy. Connection between valve and spout for center-set faucet shall be of rigid metal tubing. Flow shall be limited to 0.25 gallon per cycle at a flowing water pressure of 80 psi if a metering device or fitting is used that limits the period of water discharge such as a foot switch or fixture occupancy sensor. If a metering device is not used, the flow shall be limited to 2.5 gpm at a flowing pressure of 80 psi.

Handles - Lever type. Cast, formed, or drop forged copper alloy.

Drain - Strainer shall be copper alloy or stainless steel. Pop-up drain shall include stopper, lift rods, jam nut, washer, and tail piece. See paragraph FIXTURES for optional plastic accessories. Provide complete exposed insulation kit in conformance to ADA Article 4.19.4 and California Article P1504B for P-traps, offset strainers and angle stop-valve assemblies.

L-1 WHEELCHAIR LAVATORY:

Vitreous china, FS WW-P-541/9, Type III, Class 2, Control A, inches wide by 27 inches deep with gooseneck spout. Flow shall be limited to 0.25 gpm per cycle at a flowing water pressure of 80 psi if a metering device or fitting is used that limits the period of water discharge such as foot switch or fixture occupancy sensor. If a metering device is not used, the flow shall be limited to 2.5 gpm at a flowing water pressure of 80 psi.

Drain - Strainer shall be copper alloy or stainless steel. Provide complete exposed insulation kit in conformance to ADA Article 4.19.4 and California Article P1504B for P-traps, offset strainers and angle stop-valve assemblies.

SS-1 SERVICE SINK:

Enameled cast iron, copper alloy or stainless steel rim guard, FS WW-P-541/5 ± 20 inches x 16 inches x 11 inches deep.

Faucet and Spout - Cast or wrought copper alloy, with top or bottom brace, with backflow preventer. Faucets shall have replaceable seat and the washer shall rotate onto the seat. Handles shall be four arm type. Strainers shall have internal threads.

Drain Assembly - Plug, cup strainer, crossbars, jam nuts, washers, couplings, stopper, etc. shall be copper alloy or stainless steel.

Trap - Cast iron.

SH-1 Shower: Shower heads, CID A-A-240 other than emergency showers, shall include a non-removable, tamperproof device to limit shower flow to 2.75 gpm when tested in accordance with ASME A112.18.1M.

Wall Mounted: Shower head shall be nonadjustable spray, stainless steel or chromium plated brass with ball joint. Handles shall be single handle. Control valves shall be copper alloy and have metal integral parts of copper alloy, nickel alloy, or stainless steel. Valves shall be thermostatic mixing, pressure reducing type. Shower head shall be vandalproof with integral back.

DF-1 WATER COOLER DRINKING FOUNTAINS: Water cooler drinking fountains shall: be self contained, conform to ARI 1010, use one of the halogenated fluorocarbons as a refrigerant, have a capacity to deliver 8 gph of water at 50 degrees F with an inlet water temperature of 80 degrees F while residing in a room environment of 90 degrees F, and have self-closing valves. Self-closing valves shall have automatic stream regulators, have a flow control capability, have a push button actuation or have a cross-shaped index metal turn handle without a hood. Exposed surfaces of stainless steel shall have No. 4 general polish finish. Spouts shall provide a flow of water at least 4 inches high so as to allow the insertion of a cup or glass under the flow of water.

Handicapped - Handicapped units shall be surface wall-mounted. The dimensions shall be 15 inches wide, 20 inches deep, with a back height of 6 to 8 inches. The unit shall clear the floor or ground by at least 8 inches. A clear knee space shall exist between the bottom of the bowl and the floor or ground of at least 27 inches and between the front edge of the bowl and the body of the unit of at least 8 inches. A 8 inch wide clear space shall exist on both sides of the unit. The spout height shall be no more than 36 inches above the floor or ground to the outlet. The spout shall be at the front of the unit and direct the water flow in a trajectory that is parallel or nearly parallel to the front of the unit. The bowl shall be 6-1/2 inches high, made of corrosion resisting steel and be for interior installation.

EEW-1 COMBINATION EMERGENCY EYEWASH FIXTURE

ANSI Z358.1, wall mounted self-cleaning, non-clogging eye and face wash with quick opening, full-flow valves, stainless steel eye and face-wash receptor. Unit shall deliver 3 gpm of aerated water at 30 psig flow pressure, with eye and face nozzles 33 to 45 inches above finished floor. Provide with skirt option. Provide copper alloy control valves.

3.11 PERFORMANCE OF WATER HEATING EQUIPMENT: Standard rating condition terms are as follows:

EF = Energy factor, overall efficiency.

ET = Thermal efficiency with 70 degrees F delta T.

EC = Combustion efficiency, 100 percent - flue loss when smoke = o (trace is permitted).

SL = Standby loss in W/sq. ft. based on 80 degrees F delta T, or in percent per hour based on

nominal 90 degrees F delta T.

HL = Heat loss of tank surface area.

V = Storage volume in gallons

3.11.1 Storage Water Heaters

3.11.1.1 Gas

a. Storage capacity of 100 gallons or less, and propane gas input rating of 75,000 Btu/h or less: minimum EF shall be 0.62-0.0019V per 10 CFR 430.

b. Volumes and inputs: ET shall be 80 percent per ANSI Z21.10.3.

TABLE I

PIPE AND FITTING MATERIALS FOR

DRAINAGE, WASTE, AND VENT PIPING SYSTEMS

		SERVICE					
Item No.	Pipe and Fitting Materials	A	B	C	D	E	F
1	Cast iron soil pipe and fittings, hub and spigot, ASTM A 74 with compression gaskets	X	X	X	X	X	
2	Cast iron pipe and fittings hubless, CISPI 301 and ASTM A 888	X	X	X	X		
3	Cast iron drainage fittings, threaded, ASME B16.12 for use with Item 10	X			X	X	
4	Cast iron screwed fittings (threaded) ASME B16.4 for use with Item 10				X	X	
5	Grooved pipe couplings, ferrous and non-ferrous pipe ASTM A 536 and ASTM A 47	X	X		X	X	
6	Ductile iron grooved joint fittings for ferrous pipe ASTM A 536 and ASTM A 47 for use with Item 5	X	X		X	X	
7	Bronze sand casting grooved joint pressure fittings for non-ferrous pipe ASTM B 584, for use with Item 5	X	X		X	X	
8	Wrought copper grooved joint pressure pressure fittings for non-ferrous pipe ASTM B 75 C12200, ASTM B 152 C11000, ASME B16.22		X	X			
			ASME B16.22 for use with Item 5				
9	Malleable-iron threaded fittings, galvanized ASME B16.3 for use with Item 10				X	X	
10	Steel pipe, seamless galvanized, ASTM A 53, Type S, Grade B	X			X	X	
11	Seamless red brass pipe, ASTM B 43			X	X		

12	Bronzed flanged fittings, ASME B16.24 for use with Items 11 and 14				X	X
13	Cast copper alloy solder joint pressure fittings, ASME B16.18 for use with Item 14				X	X
14	Seamless copper pipe, ASTM B 42				X	X
15	Cast bronze threaded fittings, ASME B16.15				X	X
16	Copper drainage tube, (DWV), ASTM B 306	X*	X	X*	X	X
17	Wrought copper and wrought alloy solder-joint drainage fittings. ASME B16.29	X	X	X	X	X
18	Cast copper alloy solder joint drainage fittings, DWV, ASME B16.23	X	X	X	X	X

SERVICE:

A - Underground Building Soil, Waste and Storm Drain
B - Aboveground Soil, Waste, Drain In Buildings
C - Underground Vent
D - Aboveground Vent
E - Interior Rainwater Conductors Aboveground
F - Corrosive Waste And Vent Above And Belowground
* - Hard Temper

TABLE II
PIPE AND FITTING MATERIALS FOR PRESSURE PIPING SYSTEMS

		SERVICE			
Item No.	Pipe and Fitting Materials	A	B	C	D
1	Malleable-iron threaded fittings, a. Galvanized, ASME B16.3 for use with Item 4a	X	X	X	X
	b. Same as "a" but not galvanized for use with Item 4b			X	
2	Grooved pipe couplings, ferrous pipe ASTM A 536 and ASTM A 47, non-ferrous pipe, ASTM A 536 and ASTM A 47	X	X	X	

3	Ductile iron grooved joint fittings for ferrous pipe ASTM A 536 and ASTM A 47 for use with Item 2	X	X	X		
4	Steel pipe: a. Seamless, galvanized, ASTM A 53, Type S, Grade B		X	X	X	X
	b. Seamless, black, ASTM A 53, Type S, Grade B				X	
5	Seamless red brass pipe, ASTM B 43	X	X		X	
6	Bronze flanged fittings, ASME B16.24 for use with Items 4 and 6	X	X	X		
7	Seamless copper pipe, ASTM B 42	X	X	X		
8	Seamless copper water tube, ASTM B 88	X**	X**	X**	X***	
9	Seamless and welded copper distribution tube (Type D) ASTM B 641	X**	X**	X**	X****	
10	Cast bronze threaded fittings, ASME B16.15 for use with Items 7 and 8	X	X		X	
11	Wrought copper and bronze solder-joint pressure fittings, ASME B16.22 for use with Items 7 and 8	X	X	X	X	
12	Cast copper alloy solder-joint pressure fittings, ASME B16	X	X	X	X	
13	Bronze and sand castings grooved joint pressure fittings for non-ferrous pipe ASTM B 584, for use with Item 2	X	X	X		

A - Cold Water Aboveground
B - Hot Water 82 degree C80 degrees F Maximum Aboveground
C - Compressed Air Lubricated
D - Cold Water Service Belowground
Indicated types are minimum wall thicknesses.
** - Type L - Hard
*** - Type K - Hard temper with brazed joints only or type K-soft temper without joints in or under floors
**** - In or under slab floors only brazed joints

TABLE III
STANDARD RATING CONDITIONS AND MINIMUM PERFORMANCE RATINGS FOR WATER HEATING EQUIPMENT

A. STORAGE WATER HEATERS

FUEL	STORAGE CAPACITY LITERS	INPUT RATING	TEST PROCEDURE	MINIMUM PERFORMANCE
Gas	100 max.	75,000 Btu/h maximum	10 CFR 430	EF = 0.62-0.0019V minimum

TERMS:

EF = Energy factor, overall efficiency.
ET = Thermal efficiency with 70 degrees F delta T.
EC = Combustion efficiency, 100 percent - flue loss when smoke = 0 (trace is permitted).
SL = Standby loss in W/sq. ft. based on 80 degrees F delta T, or in percent per hour based on nominal 90 degrees F delta T.
HL = Heat loss of tank surface area
V = Storage volume in gallons

END OF SECTION

INDEX

SECTION 15488

GAS PIPING SYSTEMS

Paragraph		Page
1.1	REFERENCES	1
1.2	GENERAL REQUIREMENTS	2
1.3	SUBMITTALS	3
2.1	PIPE AND FITTINGS	3
2.2	VALVES	5
2.3	PIPE HANGERS AND SUPPORTS	5
2.4	METERS, REGULATORS AND SHUTOFF VALVES	5
3.1	EXCAVATION AND BACKFILLING	5
3.2	GAS PIPING SYSTEM	5
3.3	PROTECTIVE COVERING	5
3.4	INSTALLATION	6
3.5	PIPE JOINTS	6
3.6	PIPE SLEEVES	7
3.7	PIPES PENETRATING WATERPROOFING MEMBRANES	7
3.8	FIRE SEAL	7
3.9	ESCUTCHEONS	7
3.10	SPECIAL REQUIREMENTS	7
3.11	BUILDING STRUCTURE	8
3.12	PIPING SYSTEM SUPPORTS	8
3.13	ELECTRICAL BONDING AND GROUNDING	8
3.14	SHUTOFF VALVE	8
3.15	TESTING	8

SECTION 15488

GAS PIPING SYSTEMS

PART 1 GENERAL

1.1 REFERENCES: The publications listed below form a part of this specification to the extent referenced. The publications are referred to in the text by basic designation only.

AMERICAN GAS ASSOCIATION (AGA)

AGA-01	(1989) A.G.A. Plastic Pipe Manual for Gas Service

AMERICAN NATIONAL STANDARDS INSTITUTE

ANSI Z21.45	(1992; Z21.4a; Z21.4b) Flexible Connectors of Other Than All-Metal Construction for Gas Appliances

AMERICAN PETROLEUM INSTITUTE (API)

API Spec 6D	(1994) Specification for Pipeline Valves (Gate, Plug, Ball, and Check Valves)

AMERICAN SOCIETY FOR TESTING AND MATERIALS (ASTM)

ASTM A 539	(1990a) Electric-Resistance-Welded Coiled Steel Tubing for Gas and Fuel Oil Lines
ASTM B 88	(1993a) Seamless Copper Water Tube
ASTM B 210	(1993) Aluminum and Aluminum-Alloy Drawn Seamless Tubes
ASTM B 241	(1993) Aluminum and Aluminum-Alloy Seamless Pipe and Seamless Extruded Tube
ASTM B 280	(1993a) Seamless Copper Tube for Air Conditioning and Refrigeration Field Service
ASTM D 2513	(1993) Thermoplastic Gas Pressure Pipe, Tubing, and Fittings
ASTM D 2517	(1981; R 1987) Reinforced Epoxy Resin Gas Pressure Pipe and Fittings

AMERICAN SOCIETY OF MECHANICAL ENGINEERS (ASME)

ASME B1.20.1	(1983; R 1992) Pipe Threads, General Purpose (Inch)
ASME B16.3	(1992) Malleable Iron Threaded Fittings
ASME B16.5	(1988; Errata Oct 88; B16.5a) Pipe Flanges and Flanged Fittings
ASME B16.9	(1993) Factory-Made Wrought Steel Buttwelding Fittings
ASME B16.11	(1991) Forged Fittings, Socket-Welding and Threaded

ASME B16.21	(1992) Nonmetallic Flat Gaskets for Pipe Flanges
ASME B16.33	(1990) Manually Operated Metallic Gas Valves for Use in Gas Piping Systems Up to 125 psig (Sizes 1/2 through 2)
ASME B31.1	(1992; B31.1a; B31.1b) Power Piping
ASME B31.2	(1968) Fuel Gas Piping
ASME B36.10M	(1985) Welded and Seamless Wrought Steel Pipe
ASME BPV IX	(1992; Addenda Dec 1992, Dec 1993, Dec 1994) Boiler and Pressure Vessel Code; Section IX, Welding and Brazing Qualifications

MANUFACTURERS STANDARDIZATION SOCIETY OF THE VALVE AND FITTINGS INDUSTRY (MSS)

MSS SP-25	(1993) Standard Marking System for Valves, Fittings, Flanges and Unions
MSS SP-58	(1993) Pipe Hangers and Supports - Materials, Design and Manufacture
MSS SP-69	(1991) Pipe Hangers and Supports - Selection and Application

NATIONAL FIRE PROTECTION ASSOCIATION (NFPA)

NFPA 54	(1992) National Fuel Gas Code
NFPA 58	(1992) Storage and Handling of Liquified Petroleum Gases
NFPA 70	(1993) National Electrical Code

UNDERWRITERS LABORATORIES (UL)

UL-06	(1994) Gas and Oil Equipment Directory

1.2 GENERAL REQUIREMENTS

1.2.1 Welding: Piping shall be welded in accordance with qualified procedures using performance qualified welders and welding operators. Procedures and welders shall be qualified in accordance with ASME BPV IX. Welding procedures qualified by others, and welders and welding operators qualified by another employer may be accepted as permitted by ASME B31.1. The Contracting Officer shall be notified at least 24 hours in advance of tests and the tests shall be performed at the work site if practicable. The Contracting Officer shall be furnished with a copy of qualified procedures and a list of names and identification symbols of qualified welders and welding operators. The welder or welding operator shall apply his assigned symbol near each weld he makes as a permanent record. Structural members shall be welded in accordance with Section 05055 WELDING, STRUCTURAL.

1.2.2 Jointing Thermoplastic and Fiberglass Piping: Piping shall be jointed by performance qualified joiners using qualified procedures in accordance with AGA-01, Plastic Pipe Manual for Gas Service. The Contracting Officer shall be furnished with a copy of qualified procedures and list of and identification symbols of qualified joiners.

1.2.3 Standard Products: Materials and equipment shall be the standard products of a manufacturer regularly engaged in the manufacture of the products and shall essentially duplicate items that have been

in satisfactory use for at least 2 years prior to bid opening. Asbestos or products containing asbestos shall not be used. Manufacturer's descriptive data and installation instructions shall be submitted for approval for compression-type mechanical joints used in joining dissimilar materials and for insulating joints. Valves, flanges and fittings shall be marked in accordance with MSS SP-25.

1.2.4 Verification of Dimensions: The Contractor shall become familiar with all details of the work, verify all dimensions in the field, and shall advise the Contracting Officer of any discrepancy before performing the work.

1.3 SUBMITTALS: Government approval is required for submittals with a "GA" designation; submittals having an "FIO" designation are for information only. The following shall be submitted in accordance with Section 01300 SUBMITTAL PROCEDURES:

SD-02 Manufacturer's Catalog Data

Pipe and fittings; GA.

Valve box; GA.

Hangers and supports; GA.

Pressure regulator; GA.

Gas equipment connectors; GA.

Valves; GA.

Warning and identification tape; GA.

Risers; GA.

Transition fittings; GA.

LPG containers and accessories; GA.

SD-04 Drawings

Gas Piping System; GA.

Drawings showing location, size and all branches of pipeline; location of all required shutoff valves; and instructions necessary for the installation of connectors and supports.

SD-13 Drawings

LPG containers and accessories; GA.

PART 2 PRODUCTS

2.1 PIPE AND FITTINGS

2.1.1 Steel Pipe, Joints, and Fittings: Steel pipe shall conform to ASME B36.10M. Malleable-iron threaded fittings shall conform to ASME B16.3. Steel pipe flanges and flanged fittings including bolts, nuts, and bolt pattern shall be in accordance with ASME B16.5. Wrought steel buttwelding fittings shall

conform to ASME B16.9. Socket welding and threaded forged steel fittings shall conform to ASME B16.11.

2.1.2 Aluminum Alloy Pipe and Tubing, Joints, and Fittings: Aluminum alloy pipe shall conform to ASTM B 241, except alloy 5456 shall not be used, and the ends of each length of pipe shall be marked indicating it conforms to NFPA 54. Pipe joints shall be threaded, flanged, brazed or welded.

Aluminum alloy tubing shall conform to ASTM B 210, Type A or B, or ASTM B 241, Type A or equivalent. Tubing joints shall be made up with gas tubing fittings recommended by the tubing manufacturer.

2.1.3 Copper Tubing, Joints and Fittings: Copper tubing shall conform to ASTM B 88, Type K or L, or ASTM B 280. Tubing joints shall be made up with tubing fittings recommended by the tubing manufacturer.

2.1.4 Steel Tubing, Joints and Fittings: Steel tubing shall conform to ASTM A 539. Tubing joints shall be made up with gas tubing fittings recommended by the tubing manufacturer.

2.1.5 Container and Accessories: NFPA 58, DOT or ASME containers with appurtenances, system working pressure, that is LPG vapor pressure at 100 degrees F, and water capacity as indicated. Provide containers with piping and fittings, fuse plugs, hose and flexible hose connectors, gas-air mixer, strainer, and marking conforming to NFPA 58.

2.1.6 Thermoplastic Pipe, Tubing, Joints, and Fittings: Thermoplastic pipe, tubing, joints and fittings shall conform to ASTM D 2513.

2.1.7 Fiberglass Pipe, Joints, and Fittings: Fiberglass piping systems shall conform to ASTM D 2517.

2.1.8 Sealants for Steel Pipe Threaded Joints: Joint sealing compound shall be listed in UL-06, Class 20 or less. Tetrafluoroethylene tape shall conform to UL-06.

2.1.9 Identification: Pipe flow markings and metal tags shall be provided as required.

2.1.10 Flange Gaskets: Gaskets shall be nonasbestos compressed material in accordance with ASME B16.21, 1/16 inch thickness, full face or self-centering flat ring type. The gaskets shall contain aramid fibers bonded with styrene butadiene rubber (SBR) or nitrile butadiene rubber (NBR) suitable for a maximum 600 degree F service. NBR binder shall be used for hydrocarbon service.

2.1.11 Pipe Threads: Pipe threads shall conform to ASME B1.20.1.

2.1.12 Escutcheons: Escutcheons shall be chromium-plated steel or chromium-plated brass, either one piece or split pattern, held in place by internal spring tension or set screw.

2.1.13 Gas Transition Fittings: Gas transition fittings shall be manufactured steel fittings approved for jointing metallic and thermoplastic or fiberglass pipe. Approved transition fittings are those that conform to AGA-01 requirements for transitions fittings.

2.1.14 Insulating Pipe Joints

2.1.14.1 Insulating Joint Material: Insulating joint material shall be provided between flanged or threaded metallic pipe systems where shown to control galvanic or electrical action.

2.1.14.2 Threaded Pipe Joints: Joints for threaded pipe shall be steel body nut type dielectric unions with insulating gaskets.

2.1.14.3 Flanged Pipe Joints: Joints for flanged pipe shall consist of full face sandwich-type flange insulating gasket of the dielectric type, insulating sleeves for flange bolts, and insulating washers for flange nuts.

2.1.15 Flexible Connectors: Flexible connectors for connecting gas utilization equipment to building gas piping shall conform to ANSI Z21.45.

2.2 VALVES: Valves shall be suitable for shutoff or isolation service and shall conform to the following:

2.2.1 Valves 2 Inches and Smaller: Valves 2 inches and smaller shall conform to ASME B16.33 and shall be of materials and manufacture compatible with system materials used.

2.2.2 Valves 2-1/2 Inches and Larger: Valves 2-1/2 inches and larger shall be carbon steel conforming to API Spec 6D, Class 150.

2.3 PIPE HANGERS AND SUPPORTS: Pipe hangers and supports shall conform to MSS SP-58 and MSS SP-69.

2.4 METERS, REGULATORS AND SHUTOFF VALVES: Meters, regulators and shutoff valves shall be as specified in Section 02685 GAS DISTRIBUTION SYSTEM or AGA compliance certified.

PART 3 EXECUTION

3.1 EXCAVATION AND BACKFILLING: Earthwork shall be as specified in Section 02222 EXCAVATION, TRENCHING AND BACKFILLING FOR UTILITIES SYSTEMS.

3.2 GAS PIPING SYSTEM: Gas piping system shall be from the point of delivery, defined as the outlet of the service regulator shutoff valve at LPG container.

3.2.1 Protection of Materials and Components: Pipe and tube openings shall be closed with caps or plugs during installation. Equipment shall be protected from dirt, water, and chemical or mechanical damage. At the completion of all work, the entire system shall be thoroughly cleaned.

3.2.2 Workmanship and Defects: Piping, tubing and fittings shall be clear and free of cutting burrs and defects in structure or threading and shall be thoroughly brushed and chip-and scale-blown. Defects in piping, tubing or fittings shall not be repaired. When defective piping, tubing, or fittings are located in a system, the defective material shall be replaced.

3.3 PROTECTIVE COVERING

3.3.1 Underground Metallic Pipe: Buried metallic piping shall be protected from corrosion with exterior protective coatings. When dissimilar metals are joined underground, gastight insulating fittings shall be used.

3.3.2 Aboveground Metallic Piping Systems

3.3.2.1 Ferrous Surfaces: Shop primed surfaces shall be touched up with ferrous metal primer. Surfaces that have not been shop primed shall be solvent cleaned. Surfaces that contain loose rust, loose mill scale and other foreign substances shall be mechanically cleaned by power wire brushing and primed with ferrous metal primer or vinyl type wash coat. Primed surface shall be finished with two coats of exterior oil paint or vinyl paint.

3.3.2.2 Nonferrous Surfaces: Except for aluminum alloy pipe, nonferrous surfaces shall not be painted. Surfaces of aluminum alloy pipe and fittings shall be painted to protect against external corrosion where they contact masonry, plaster, insulation, or are subject to repeated wettings by such liquids as water, detergents or sewage. The surfaces shall be solvent-cleaned and treated with vinyl type wash coat. A first coat of aluminum paint and a second coat of alkyd gloss enamel or silicone alkyd copolymer enamel shall be applied.

3.4 INSTALLATION: Installation of the gas system shall be in conformance with the manufacturer's recommendations and applicable provisions of NFPA 54, AGA-01, and as indicated. Pipe cutting shall be done without damage to the pipe. Unless otherwise authorized, cutting shall be done by an approved type of mechanical cutter. Wheel cutters shall be used where practicable. On steel pipe 6 inches and larger, an approved gas cutting and beveling machine may be used. Cutting of thermoplastic and fiberglass pipe shall be in accordance with AGA-01.

3.4.1 Metallic Piping Installation: Underground piping shall be buried a minimum of 18 inches below grade. Changes in direction of piping shall be made with fittings only; mitering or notching pipe to form elbows and tees or other similar type construction will not be permitted. Branch connection may be made with either tees or forged branch outlet fittings. Branch outlet fittings shall be forged, flared for improvement of flow where attached to the run, and reinforced against external strains. Aluminum alloy pipe shall not be used in exterior locations or underground.

3.4.2 Metallic Tubing Installation: Metallic tubing shall be installed using gas tubing fittings approved by the tubing manufacturer. Branch connections shall be made with tees. All tubing end preparation shall be made with tools designed for the purpose. Aluminum alloy tubing shall not be used in exterior locations or underground.

3.4.3 Thermoplastic and Fiberglass Piping, Tubing, and Fittings: Thermoplastic and fiberglass piping, tubing, and fittings shall be installed outside and underground only. Piping shall be buried a minimum of 18 inches below grade. The piping shall be installed to avoid excessive stresses due to thermal contraction. Thermoplastic and fiberglass piping shall only be allowed as indicated.

3.4.4 Connections Between Metallic and Plastic Piping: Connections shall be made only outside, underground, and with approved transition fittings.

3.4.5 Concealed Piping in Buildings: When installing piping which is to be concealed, unions, tubing fittings, running threads, right- and left-hand couplings, bushings, and swing joints made by combinations of fittings shall not be used.

3.4.5.1 Piping in Partitions: Concealed piping shall be located in hollow rather than solid partitions. Tubing passing through walls or partitions shall be protected against physical damage.

3.4.6 Aboveground Piping: Aboveground piping shall be run as straight as practicable along the alignment indicated and with a minimum of joints. Piping shall be separately supported. Exposed horizontal piping shall not be installed farther than 6 inches from nearest parallel wall in laundry areas where clothes hanging could be attempted.

3.4.7 Final Gas Connections: Unless otherwise specified herein, final connections shall be made with rigid metallic pipe and fittings. Flexible connectors may be used for final connections to gas utilization equipment. In addition to cautions listed in instructions required by ANSI standards for flexible connectors, insure that flexible connectors do not pass through equipment cabinet. Provide accessible gas shutoff valve and coupling for each gas equipment item.

3.5 PIPE JOINTS: Pipe joints shall be designed and installed to effectively sustain the longitudinal pull-out forces caused by contraction of the piping or superimposed loads.

3.5.1 Threaded Metallic Joints: Threaded joints in metallic pipe shall have tapered threads evenly cut and shall be made with UL approved graphite joint sealing compound for gas service or tetrafluoroethylene tape applied to the male threads only. Threaded joints up to 1-1/2 inches in diameter may be made with approved tetrafluoroethylene tape. Threaded joints up to 2 inches in diameter may be made with approved joint sealing compound. After cutting and before threading, pipe shall be reamed and burrs shall be removed. Caulking of threaded joints to stop or prevent leaks shall not be permitted.

3.5.2 Welded Metallic Joints: Beveling, alignment, heat treatment, and inspection of welds shall conform to ASME B31.2. Weld defects shall be removed and repairs made to the weld, or the weld joints shall be entirely removed and rewelded. After filler metal has been removed from its original package, it shall be protected or stored so that its characteristics or welding properties are not affected adversely. Electrodes that have been wetted or have lost any of their coating shall not be used.

3.5.3 Thermoplastic and Fiberglass Joints: Jointing procedures shall conform to AGA-01. Solvent cement or heat of fusion joints shall not be made between different kinds of plastics.

3.5.4 Flared Metallic Tubing Joints: Flared joints in metallic tubing shall be made with special tools recommended by the tubing manufacturer. Flared joints shall be used only in systems constructed from nonferrous pipe and tubing, when experience or tests have demonstrated that the joint is suitable for the conditions, and when adequate provisions are made in the design to prevent separation of the joints. Metallic ball sleeve compression-type tubing fittings shall not be used for tubing joints.

3.5.5 Solder or Brazed Joints: Joints in metallic tubing and fittings shall be made with materials and procedures recommended by the tubing supplier. Joints shall be brazed with material having a melting point above 1000 degrees F. Brazing alloys shall not contain phosphorous.

3.5.6 Joining Thermoplastic or Fiberglass to Metallic Piping or Tubing: When compression type mechanical joints are used, the gasket material in the fittings shall be compatible with the plastic piping and with the gas in the system. An internal tubular rigid stiffener shall be used in conjunction with the fitting, and the stiffener shall be flush with end of the pipe or tubing and shall extend at least to the outside end of the compression fitting when installed. The stiffener shall be free of rough or sharp edges and shall not be a force fit in the plastic. A split tubular stiffener shall not be used.

3.6 PIPE SLEEVES: Pipes passing through concrete or masonry walls or concrete floors or roofs shall be provided with pipe sleeves fitted into place at the time of construction. Sleeves shall not be installed in structural members except where indicated or approved. All rectangular and square openings shall be as detailed. Each sleeve shall extend through its respective wall, floor or roof, and shall be cut flush with each surface, except in mechanical room floors not located on grade where clamping flanges or riser pipe clamps are used. Sleeves in mechanical room floors above grade shall extend at least 4 inches above finish floor. Unless otherwise indicated, sleeves shall be large enough to provide a minimum clearance of 1/4 inch all around the pipe. Sleeves in bearing walls, waterproofing membrane floors, and wet areas shall be steel pipe. Sleeves in nonbearing walls, floors, or ceilings may be steel pipe, galvanized sheet metal with lock-type longitudinal seam, or moisture-resistant fiber or plastic. For penetrations of fire walls, fire partitions and floors which are not on grade, the annular space between the pipe and sleeve shall be sealed with FM and UL rated firestopping material and sealant.

3.7 PIPES PENETRATING WATERPROOFING MEMBRANES: Pipes penetrating waterproofing membranes shall be installed as specified in Section 15400 PLUMBING, GENERAL PURPOSE.

3.8 FIRE SEAL: Penetrations of fire rated partitions, walls and floors shall be sealed with FM and UL rated sealants.

3.9 ESCUTCHEONS: Escutcheons shall be provided for all finished surfaces where gas piping passes through floors, walls, or ceilings except in boiler, utility, or equipment rooms.

3.10 SPECIAL REQUIREMENTS: Drips, grading of the lines, freeze protection, and branch outlet locations shall be as shown and shall conform to the requirements of NFPA 54.

3.11 BUILDING STRUCTURE: Building structure shall not be weakened by the installation of any gas piping. Beams or joists shall not be cut or notched.

3.12 PIPING SYSTEM SUPPORTS: Gas piping systems in buildings shall be supported with pipe hooks, metal pipe straps, bands or hangers suitable for the size of piping or tubing. Gas piping system shall not be supported by other piping. Spacing of supports in gas piping and tubing installations shall conform to the requirements of NFPA 54. The selection and application of supports in gas piping and tubing installations shall conform to the requirements of MSS SP-69. In the support of multiple pipe runs on a common base member, a clip or clamp shall be used where each pipe crosses the base support member. Spacing of the base support members shall not exceed the hanger and support spacing required for any of the individual pipes in the multiple pipe run. The clips or clamps shall be rigidly connected to the common base member. A clearance of 1/8 inch shall be provided between the pipe and clip or clamp for all piping which may be subjected to thermal expansion.

3.13 ELECTRICAL BONDING AND GROUNDING: A gas piping system within a building shall be electrically continuous and bonded to a grounding electrode as required by NFPA 70.

3.14 SHUTOFF VALVE: Main gas shutoff valve controlling the gas piping system shall be easily accessible for operation and shall be installed as indicated, protected from physical damage, and marked with a metal tag to clearly identify the piping system controlled.

3.15 TESTING: Before any section of a gas piping system is put into service, it shall be carefully tested to assure that it is gastight. Prior to testing, the system shall be blown out, cleaned and cleared of all foreign material. Each joint shall be tested by means of an approved gas detector, soap and water, or an equivalent nonflammable solution. Testing shall be completed before any work is covered, enclosed, or concealed. All testing of piping systems shall be done with due regard for the safety of employees and the public during the test. Bulkheads, anchorage and bracing suitably designed to resist test pressures shall be installed if necessary. Oxygen shall not be used as a testing medium.

3.15.1 Pressure Tests: Before appliances are connected, piping systems shall be filled with air or an inert gas and shall withstand a minimum pressure of 3 pounds gauge for a period of not less than 10 minutes as specified in NFPA 54 without showing any drop in pressure. Oxygen shall not be used. Pressure shall be measured with a mercury manometer, slope gauge, or an equivalent device so calibrated as to be read in increments of not greater than 0.1 pound. The source of pressure shall be isolated before the pressure tests are made.

3.15.2 Pressure Tests for Liquified Petroleum Gas: Systems shall withstand the pressure test described above. When appliances are connected to the piping system, fuel gas shall be used for testing and appliances shall withstand a pressure of not less than 10 inches nor more than 14.0 inches water column (8.0 ounces per square inch) for a period of not less than 10 minutes without showing any drop in pressure. Pressure shall be measured with a water manometer or an equivalent device calibrated to be read in increments of not greater than 0.1 inch water column. The source of pressure shall be isolated before the pressure tests are made.

3.15.3 Test With Gas: Before turning gas under pressure into any piping, all openings from which gas can escape shall be closed. Immediately after turning on the gas, the piping system shall be checked for leakage by using a laboratory-certified gas meter, an appliance orifice, a manometer, or equivalent device. All testing shall conform to the requirements of NFPA 54. If leakage is recorded, the gas supply shall be shut off, the leak shall be repaired, and the tests repeated until all leaks have been stopped.

3.15.4 Purging: After testing is completed, and before connecting any appliances, all gas piping shall be fully purged. LPG piping tested using fuel gas with appliances connected does not require purging. Piping shall not be purged into the combustion chamber of an appliance. The open end of piping systems being purged shall not discharge into confined spaces or areas where there are ignition sources unless the safety precautions recommended in NFPA 54 are followed.

3.15.5 Labor, Materials and Equipment: All labor, materials and equipment necessary for conducting the testing and purging shall be furnished by the Contractor.

-- End of Section --

INDEX

SECTION 15569

WATER HEATING; GAS; UP TO 20 MBTUH

Paragraph		Page
1.1	REFERENCES	15569-1
1.2	GENERAL REQUIREMENTS	15569-4
1.3	SUBMITTALS	15569-4
1.4	MANUFACTURER'S SERVICES	15569-6
1.5	DELIVERY AND STORAGE	15569-6
2.1	BOILERS	15569-7
2.2	COMBUSTION CONTROL EQUIPMENT	15569-7
2.3	PUMPS	15569-8
2.4	HEATING AND VENTILATING UNITS	15569-8
2.5	AIR HANDLING UNITS	15569-8
2.6	FITTINGS AND ACCESSORIES	15569-8
2.7	ELECTRICAL EQUIPMENT	15569-13
2.8	INSULATION	15569-13
2.10	BOILER WATER TREATMENT	15569-13
3.1	ERECTION OF BOILER AND AUXILIARY EQUIPMENT	15569-15
3.2	PIPING INSTALLATION	15569-16
3.3	GAS FUEL SYSTEM	15569-22
3.4	LIQUIFIED PETROLEUM GAS (PROPANE)	15569-22
3.5	FIELD PAINTING	15569-22
3.6	HEATING SYSTEM TESTS	15569-22
3.7	CLEANING	15569-24
3.8	FUEL SYSTEM TESTS	15569-24
3.9	FIELD TRAINING	15569-24

SECTION 15569

WATER HEATING; GAS; UP TO 20 MBTUH

PART 1 GENERAL

1.1 REFERENCES: The publications listed below form a part of this specification to the extent referenced.

The publications are referred to in the text by basic designation only.

AMERICAN SOCIETY FOR TESTING AND MATERIALS (ASTM)

ASTM A 47	(1990) Ferritic Malleable Iron Castings
ASTM A 53	(1993a) Pipe, Steel, Black and Hot-Dipped, Zinc-Coated Welded and Seamless
ASTM A 105	(1994) Forgings, Carbon Steel, for Piping Components
ASTM A 106	(1994) Seamless Carbon Steel Pipe for High-Temperature Service
ASTM A 167	(1993) Stainless and Heat-Resisting Chromium-Nickel Steel Plate, Sheet, and Strip
ASTM A 183	(1983, R 1990) Carbon Steel Track Bolts and Nuts
ASTM A 193	(1994b) Alloy-Steel and Stainless Steel Bolting Materials for High-Temperature Service
ASTM A 234	(1994) Piping Fittings of Wrought Carbon Steel and Alloy Steel for Moderate and Elevated Temperatures
ASTM A 366	(1991; R 1993) Steel, Sheet, Carbon, Cold-Rolled, Commercial Quality
ASTM A 515	(1992) Pressure Vessel Plates, Carbon Steel, for Intermediate- and Higher-Temperature Service
ASTM A 516	(1990) Pressure Vessel Plates, Carbon Steel, for Moderate- and Lower-Temperature Service
ASTM A 526	(1990) Steel Sheet, Zinc-Coated (Galvanized) by the Hot-Dip Process, Commercial Quality
ASTM A 536	(1984; R 1993) Ductile Iron Castings
ASTM B 32	(1993) Solder Metal
ASTM B 62	(1993) Composition Bronze or Ounce Metal Castings
ASTM B 75	(1993) Seamless Copper Tube
ASTM B 88	(1993a) Seamless Copper Water Tube

ASTM B 813	(1993) Liquid and Paste Fluxes for Soldering Applications of Copper and Copper Alloy Tube
ASTM D 596	(1991) Reporting Results of Analysis of Water
ASTM D 2000	(1990) Rubber Products in Automotive Applications
ASTM F 872	(1984; R 1990) Filter Units, Air Conditioning: Viscous-Impingement Types, Cleanable

AMERICAN SOCIETY OF MECHANICAL ENGINEERS (ASME)

ASME B1.20.1	(1983; R 1992) Pipe Threads, General Purpose (Inch)
ASME B16.4	(1992) Cast Iron Threaded Fittings Class 125 and 250
ASME B16.5	(1988; Errata Oct 88; B16.5a) Pipe Flanges and Flanged Fittings
ASME B16.9	(1993) Factory-Made Wrought Steel Buttwelding Fittings
ASME B16.11	(1991) Forged Steel Fittings, Socket-Welding and Threaded
ASME B16.18	(1984) Cast Copper Alloy Solder Joint Pressure Fittings
ASME B16.21	(1992) Nonmetallic Flat Gaskets for Pipe Flanges
ASME B16.22	(1989) Wrought Copper and Copper Alloy Solder Joint Pressure Fittings
ASME B16.26	(1988) Cast Copper Alloy Fittings for Flared Copper Tubes
ASME B16.34	(1988) Valves - Flanged, Threaded and Welding End
ASME B16.39	(1986) Malleable Iron Threaded Pipe Unions Classes 150, 250, and 300
ASME B31.1	(1992; B31.1a; B31.1b; B31.1c) Power Piping
ASME B31.5	(1992; B31.5a) Refrigeration Piping
ASME B40.1	(1991) Gauges - Pressure Indicating Dial Type -- Elastic Element
ASME BPV IV	(1992; Addenda Dec 1992, Dec 1993, Dec 1994) Boiler and Pressure Vessel Code; Section IV, Heating Boilers
ASME BPV VIII Div 1	(1992; Addenda Dec 1992, Dec 1993, Dec 1994) Boiler and Pressure Vessel Code; Section VIII, Pressure Vessels Division 1 - Basic Coverage
ASME BPV IX	(1992; Addenda Dec 1992, Dec 1993, Dec 1994) Boiler and Pressure Vessel Code; Section IX, Welding and Brazing Qualifications

AMERICAN WATER WORKS ASSOCIATION (AWWA)

AWWA C606	(1987) Grooved and Shouldered Joints

AMERICAN WELDING SOCIETY (AWS)

AWS A5.8	(1992) Filler Metals for Brazing and Braze Welding
AWS B2.2	(1991) Brazing Procedure and Performance Qualification

COPPER DEVELOPMENT ASSOCIATION (CDA)

CDA 404/0-RR	(1992) Copper Tube for Plumbing, Heating, Air Conditioning and Refrigeration

FEDERAL SPECIFICATIONS (FS)

FS QQ-B-654	(Rev A; Am 1; Notice 1) Brazing Alloys, Silver
FS WW-P-521	(Rev G) Pipe Fittings, Flange Fittings, and Flanges: Steel and Malleable Iron (Threaded and Butt-Welding) Class 150
FS WW-U-516	(Rev B; Notice 1) Unions, Brass or Bronze, Threaded Pipe Connections and Solder-Joint Tube Connections
FS WW-V-35	(Rev C) Valve, Ball

HYDRONICS INSTITUTE (HYI)

HYI-01	(1994) I=B=R Ratings for Boilers, Baseboard Radiation and Finned Tube (Commercial) Radiation

MANUFACTURERS STANDARDIZATION SOCIETY OF THE VALVE AND FITTINGS INDUSTRY (MSS)

MSS SP-25	(1993) Standard Marking System for Valves, Fittings, Flanges and Unions
MSS SP-58	(1993) Pipe Hangers and Supports - Materials, Design and Manufacture
MSS SP-69	(1991) Pipe Hangers and Supports - Selection and Application
MSS SP-70	(1990) Cast Iron Gate Valves, Flanged and Threaded Ends
MSS SP-71	(1990) Cast Iron Swing Check Valves, Flanges and Threaded Ends
MSS SP-73	(1991) Brazing Joints for Copper and Copper Alloy Pressure Fittings
MSS SP-78	(1987; R 1992) Cast Iron Plug Valves, Flanged and Threaded Ends
MSS SP-80	(1987) Bronze Gate, Globe, Angle and Check Valves
MSS SP-85	(1994) Cast Iron Globe & Angle Valves, Flanged and Threaded Ends

NATIONAL FIRE PROTECTION ASSOCIATION (NFPA)

NFPA 54	(1992) National Fuel Gas Code
NFPA 58	(1992) Storage and Handling of Liquified Petroleum Gases

UNDERWRITERS LABORATORIES (UL)

UL-06 (1994) Gas and Oil Equipment Directory

1.2 GENERAL REQUIREMENTS

1.2.1 Standard Products: Materials and equipment shall be the standard products of a manufacturer regularly engaged in the manufacture of the products and shall essentially duplicate items that have been in satisfactory use for at least 2 years prior to bid opening. Equipment shall be supported by a service organization that is, in the opinion of the Contracting Officer, reasonably convenient to the site.

1.2.2 Asbestos Prohibition: Asbestos and asbestos-containing products shall not be used.

1.2.3 Nameplates: Each major component of equipment shall have the manufacturer's name, address, type or style, model or serial number, and catalog number on a plate secured to the equipment. Each pressure vessel shall have an approved ASME stamp.

1.2.4 Equipment Guards: Belts, pulleys, chains, gears, couplings, projecting setscrews, keys, and other rotating parts exposed to personnel contact shall be fully enclosed or guarded in accordance with OSHA requirements. High temperature equipment and piping exposed to contact by personnel or where it creates a potential fire hazard shall be properly guarded or covered with insulation of a type specified. Catwalks, operating platforms, ladders, and guardrails shall be provided where shown and shall be constructed in accordance with Section 05500 MISCELLANEOUS METAL.

1.2.5 Verification of Dimensions: The Contractor shall become familiar with details of the work, verify dimensions in the field, and shall advise the Contracting Officer of any discrepancy before performing any work or ordering any materials.

1.2.6 Welding: Boilers and piping shall be welded and brazed in accordance with qualified procedures using performance-qualified welders and welding operators. Procedures and welders shall be qualified in accordance with ASME BPV IX. Welding procedures qualified by others, and welders and welding operators qualified by another employer may be accepted as permitted by ASME B31.1. The Contracting Officer shall be notified 24 hours in advance of tests, and the tests shall be performed at the work site if practical. The welder or welding operator shall apply his assigned symbol near each weld he makes as a permanent record. Structural members shall be welded in accordance with Section 05055 WELDING, STRUCTURAL.

1.3 SUBMITTALS: Government approval is required for submittals with a "GA" designation; submittals having an "FIO" designation are for information only. The following shall be submitted in accordance with Section 01300 SUBMITTAL PROCEDURES:

SD-01 Data

Manufacturer's Catalog Data; GA.

Manufacturer's catalog data shall be included with the detail drawings for the following items:

Boilers

Fuel Burning Equipment
Combustion Control Equipment
Pumps
Fittings and Accessories
Fuel Oil Storage System

Water Treatment System

The data shall show model, size, options, etc., that are intended for consideration. Data submitted shall be adequate to demonstrate compliance with contract requirements.

Spare Parts Data; FIO.

Spare parts data for each different item of material and equipment, after approval of the detail drawings and no later than 2 months prior to the date of beneficial occupancy. The data shall include a complete list of parts and supplies, with current unit prices and source of supply, and a list of the parts recommended by the manufacturer to be replaced after 1 and 3 years of service.

Water Treatment Plan; FIO.

Six complete copies of the proposed water treatment plan. The plan shall include a layout, control scheme, a list of the existing water conditions including the items listed in paragraph BOILER WATER TREATMENT, a list of all chemicals, the proportion of chemicals to be added, the final treated water conditions, and a description of environmental concerns for handling the chemicals.

Heating and Fuel Systems Test Procedures; FIO.

Proposed test procedures for the heating system tests and fuel system tests, at least 2 weeks prior to the start of related testing.

SD-04 Drawings

Heating System; GA.

Detail drawings consisting of equipment layout including installation details and electrical connection diagrams; combustion and safety control diagrams; ductwork layout showing the location of supports and hangers, typical hanger details, gauge reinforcement, reinforcement spacing rigidity classification, and static pressure and seal classifications; and piping layout showing the location of guides and anchors, the load imposed on each support or anchor, and typical support details. Drawings shall include any information required to demonstrate that the system has been coordinated and will properly function as a unit and shall show equipment relationship to other parts of the work, including clearances required for operation and maintenance.

SD-06 Instructions

Posted Instructions; GA.

System layout diagrams that show the layout of equipment, piping, and ductwork and typed condensed operation manuals explaining preventative maintenance procedures, methods of checking the system for normal, safe operation, and procedures for safely starting and stopping the system, framed under glass or laminated plastic, at least 2 weeks prior to the start of related testing. After approval, these items shall be posted where directed.

SD-07 Schedules

Tests; FIO.

Proposed test schedules for the heating system and fuel system tests, at least 2 weeks prior to the start of related testing.

SD-09 Reports

Heating System and Fuel System Tests; FIO.

Test reports for the heating system tests and the fuel system test, upon completion of testing complete with results.

Water Treatment Tests; FIO.

(1) The water quality test report shall identify the chemical composition of the boiler water. The report shall include a comparison of the condition of the boiler water with the manufacturer's recommended conditions. Any required corrective action shall be documented within the report.

(2) A test report shall identify the condition of the boiler at the completion of 1 year of service. The report shall include a comparison of the condition of the boiler with the manufacturer's recommended operating conditions.

SD-13 Certificates

Bolts; FIO.

Written certification by the bolt manufacturer that the bolts furnished comply with the requirements of this specification. The certification shall include illustrations of product markings, the date of manufacture, and the number of each type of bolt to be furnished based on this certification.

Boiler Emissions; FIO.

Written certification by the boiler manufacturer that each boiler furnished complies with Federal, state, and local regulations for emissions. The certification shall also include a description of applicable emission regulations. If any boiler is exempt from the emission regulations, the certification shall indicate the reason for the exemption.

SD-19 Operation and Maintenance Manuals

Heating System; GA.

Six complete manuals listing step-by-step procedures required for system startup, operation, shutdown, and routine maintenance, at least 2 weeks prior to field training. The manuals shall include the manufacturer's name, model number, parts list, simplified wiring and control diagrams, troubleshooting guide, and recommended service organization (including address and telephone number) for each item of equipment. Each service organization shall be capable of providing 4 hour onsite response to a service call on an emergency basis.

Water Treatment System; GA.

Six complete copies of operating and maintenance manuals for the step-by-step water treatment procedures, including procedures for testing the water quality.

1.4 MANUFACTURER'S SERVICES: Services of a manufacturer's representative who is experienced in the installation, adjustment, and operation of the equipment specified shall be provided. The representative shall supervise the installing, adjusting, and testing of the equipment.

1.5 DELIVERY AND STORAGE: Equipment delivered and placed in storage shall be protected from the weather, humidity and temperature variations, dirt and dust, and other contaminants.

PART 2 PRODUCTS

2.1 BOILERS: Each boiler shall have the output capacity in British thermal units per hour (Btuh) as indicated when fired with the specified fuels. The boiler shall be furnished complete with the gas burning equipment, boiler fittings and trim, automatic controls, natural draft/atmospheric burner, electrical wiring, insulation, piping connections, and protective jacket. The boiler shall be completely assembled and tested at the manufacturer's plant. Boiler auxiliaries including fans, motors, drives, and similar equipment shall be provided with at least 10 percent excess capacity to allow for field variations in settings and to compensate for any unforeseen increases in pressure losses in appurtenant piping and ductwork. However, the boiler safety devices shall not be sized for a 10 percent excess capacity. The boiler and its accessories shall be designed and installed to permit ready accessibility for operation, maintenance, and service. Boilers shall be designed, constructed, and equipped in accordance with ASME BPV IV. Each boiler shall be of the watertube type and designed for water service as specified herein. The boiler capacity shall be based on the ratings shown in HYI-01 or as certified by the American Boiler Manufacturers Association, or American Gas Association.

2.1.1 Watertube Boiler: Boiler shall be self-contained, packaged type, complete with all accessories, mounted on a structural steel base. The heat input rate for finned tube designs shall not be greater 12,000 Btu/hr per square ft based on internal heater area. The heat input rate for other boilers shall not be greater than 6,700 Btu/hr per square ft of fireside heating surface.

2.1.2 Hot Water Heating Boilers: The hot water heating boiler shall be capable of operating at the specified maximum continuous capacity without damage or deterioration to the boiler, its setting, firing equipment, or auxiliaries. The rated capacity shall be the capacity at which the boiler will operate continuously while maintaining at least the specified minimum efficiency. The boiler design conditions shall be as follows:

a. Boiler design pressure 30 psig.

b. Operating pressure at boiler outlet 125 psig.

c. Hot water temperature 160 degrees F.

d. Temperature differential between boiler discharge and system return 20 degrees F.

e. Water pressure drop one foot.

f. Outdoor ambient air temperature 95 degrees F (max), 35 degrees F (min).

g. Site elevation 200 feet.

h. Maximum continuous capacity. 152,000 Btuh.

i. Rated capacity 186,000 Btuh input.

j. Boilers with a capacity less than 300,000 Btuh shall have an Annual Fuel Utilization Efficiency of at least 80

2.2 COMBUSTION CONTROL EQUIPMENT

2.2.1 Electrical controls: Electrical control devices shall be rated at 120 or 24 volts and shall be connected as specified in Section 16415 ELECTRICAL WORK, INTERIOR.

2.2.2 Water Temperature Controller: The controller shall be of sturdy construction and shall be protected against dust and dampness. The thermostatic element shall be inserted in a separable socket installed in the boiler return piping. Controller shall be furnished with necessary equipment to automatically adjust the setting to suit the outside weather conditions. The outside air reset controller shall be operated in such a manner that the operating temperatures required by the boiler manufacturer are not compromised.

2.3 PUMPS

2.3.1 Hot Water and Boiler Circulating Pumps: Circulating pumps for hot water shall be electrically driven single-stage centrifugal type and have a capacity not less than indicated. Boiler circulating pumps shall be supported by the piping on which installed and shall be closed-coupled shaft or flexible-coupled shaft. The boiler circulating pumps shall be vertical split case type. The pump shaft shall be constructed of corrosion-resistant alloy steel, sleeve bearings and glands of bronze designed to accommodate a mechanical seal, and the housing of close-grained cast iron. Pump seals shall be capable of withstanding 240 degrees F temperature without external cooling. The motor shall have sufficient power for the service required, shall be of a type approved by the manufacturer of the pump, shall be suitable for the available electric service, and shall conform to the requirements of paragraph ELECTRICAL EQUIPMENT. Each pump suction and discharge connection shall be provided with a pressure gauge as specified. The hot water circulating pump discharge heater shall be provided with a flow switch. Flow switch unit shall be a self-contained swinging vane type to indicate fluid flow. Switch shall be a SPDT with 120-volt, 15-ampere rating.

2.4 HEATING AND VENTILATING UNITS: Heating and ventilating units and associated equipment shall be in accordance with Section 15895 AIR SUPPLY, DISTRIBUTION, VENTILATION, AND EXHAUST SYSTEM.

2.5 AIR HANDLING UNITS: Air handling units and associated equipment shall be in accordance with Section 15895 AIR SUPPLY, DISTRIBUTION, VENTILATION, AND EXHAUST SYSTEM.

2.6 FITTINGS AND ACCESSORIES: Boiler fittings and accessories shall be installed with each boiler in accordance with ASME BPV IV, unless otherwise specified.

2.6.1 Conventional Breeching and Stacks

2.6.1.1 Breeching: Each boiler shall be connected to the stack or flue by UL rated "B" vent. Joints and seams shall be securely fastened and made airtight. Suitable hinged and gasketed cleanouts shall be provided, which will permit cleaning the entire smoke connection without dismantling. Flexible-type expansion joints shall be provided as required and shall not require packing.

2.6.2 Expansion Tank: The hot water pressurization system shall include a diaphragm-type expansion tank which will accommodate the expanded water of the system generated within the normal operating temperature range, limiting the pressure increase at all components in the system to the maximum allowable pressure at those components. The only air in the system shall be the permanent sealed-in air cushion contained in the diaphragm-type tank. The sizes shall be as indicated. The expansion tank shall be welded steel, constructed, tested, and stamped in accordance with ASME BPV VIII Div 1 for a working pressure of 125 psi and precharged to the minimum operating pressure. The tank's air chamber shall be fitted with an air charging valve and pressure gauge. The tank shall be supported by steel legs or bases for vertical installation or steel saddles for horizontal installations. The tank shall have lifting rings and a drain connection. All components shall be suitable for a maximum operating temperature of 250 degrees F.

2.6.3 Air Separator: External air separation tank shall be steel, constructed, tested and stamped in accordance with ASME BPV VIII Div 1 for a working pressure of 125 psi. The capacity of the air separation tank indicated is minimum.

2.6.4 Filters: Filters shall conform to ASTM F 872.

2.6.5 Steel Sheets

2.6.5.1 Galvanized Steel: Galvanized steel shall be ASTM A 526.

2.6.5.2 Uncoated Steel: Uncoated steel shall be ASTM A 366, composition, condition, and finish best suited to the intended use. Gauge numbers specified refer to manufacturer's standard gauge.

2.6.6 Gaskets: Gaskets shall be nonasbestos material in accordance with ASME B16.21, full face or self-centering type. The gaskets shall be of the spiral wound type with graphite filler material.

2.6.7 Steel Pipe and Fittings

2.6.7.1 Steel Pipe: Steel pipe shall be ASTM A 53, Type E or S, Grade A or B, black steel, standard weight.

2.6.7.2 Steel Pipe Fittings: Fittings shall have the manufacturer's trademark affixed in accordance with MSS SP-25 so as to permanently identify the manufacturer.

2.6.7.3 Steel Flanges: Flanged fittings including flanges, bolts, nuts, bolt patterns, etc. shall be in accordance with ASME B16.5 class 150 and shall have the manufacturers trademark affixed in accordance with MSS SP-25. Flange material shall conform to ASTM A 105. Flanges for high temperature water systems shall be serrated or raised-face type. Blind flange material shall conform to ASTM A 516 cold service and ASTM A 515 for hot service. Bolts shall be high strength or intermediate strength with material conforming to ASTM A 193.

2.6.7.4 Welded Fittings: Welded fittings shall conform to ASTM A 234 with WPA marking. Buttwelded fittings shall conform to ASME B16.9, and socket-welded fittings shall conform to ASME B16.11.

2.6.7.5 Cast-Iron Fittings: Fittings shall be ASME B16.4, Class 125, type required to match connecting piping.

2.6.7.6 Malleable-Iron Fittings: Fittings shall be FS WW-P-521, type as required to match connecting piping.

2.6.7.7 Unions: Unions shall be ASME B16.39, Class 150.

2.6.7.8 Threads: Pipe threads shall conform to ASME B1.20.1.

2.6.7.9 Grooved Mechanical fittings: Joints and fittings shall be designed for not less than 125 psig service and shall be the product of the same manufacturer. Fitting and coupling houses shall be malleable iron conforming to ASTM A 47, Grade 32510; ductile iron conforming to ASTM A 536, Grade 65-45-12; or steel conforming to ASTM A 106, Grade B or ASTM A 53. Gaskets shall be molded synthetic rubber with central cavity, pressure responsive configuration and shall conform to ASTM D 2000, Grade No. 2CA615A15B44F17Z for circulating medium up to 230 degrees F or Grade N0. M3BA610A15B44Z for circulating medium up to 200 degrees F. 200 degrees F. Grooved joints shall conform to AWWA C606. Coupling nuts and bolts shall be steel and shall conform to ASTM A 183.

2.6.8 Copper Tubing and Fittings

2.6.8.1 Copper Tubing: Tubing shall be ASTM B 88, Type K or L. Adapters for copper tubing shall be brass or bronze for brazed fittings.

2.6.8.2 Solder-Joint Pressure Fittings: Wrought copper and bronze solder-joint pressure fittings shall conform to ASME B16.22 and ASTM B 75. Cast copper alloy solder-joint pressure fittings shall conform to ASME B16.18.

2.6.8.3 Flared Fittings: Cast copper alloy fittings for flared copper tube shall conform to ASME B16.26 and ASTM B 62.

2.6.8.4 Adapters: Adapters may be used for connecting tubing to flanges and to threaded ends of valves and equipment. Extracted brazed tee joints produced with an acceptable tool and installed as recommended by the manufacturer may be used.

2.6.8.5 Unions: Unions shall conform to FS WW-U-516 for brass or bronze.

2.6.8.6 Brazing Material: Brazing material shall conform to AWS A5.8.

2.6.8.7 Brazing Flux: Flux shall be in paste or liquid form appropriate for use with brazing material. Flux shall be as follows: lead-free; have a 100 percent flushable residue; contain slightly acidic reagents; contain potassium borides, and contain fluorides. Silver brazing materials shall be in accordance with FS QQ-B-654.

2.6.8.8 Solder Material: Solder metal shall conform to ASTM B 32 95-5 tin-antimony.

2.6.8.9 Solder Flux: Flux shall be liquid form, non-corrosive, and conform to ASTM B 813, Standard Test 1.

2.6.9 Dielectric Unions: Dielectric unions shall have metal connections on both ends. The ends shall be threaded, flanged, or brazed to match adjacent piping. Metal parts of the union shall be separated so that the electrical current is below 1 percent of the galvanic current which would exist upon metal-to-metal contact.

2.6.10 Flexible Pipe Connectors: Flexible pipe connectors shall be designed for 125 psi or 150 psi service. Connectors shall be installed where indicated. The flexible section shall be constructed of rubber, tetrafluoroethylene resin, or corrosion-resisting steel, bronze, monel, or galvanized steel. Materials used and the configuration shall be suitable for the pressure, vacuum, and temperature medium. The flexible section shall be suitable for service intended and may have threaded, welded, soldered, flanged, or socket ends. Flanged assemblies shall be equipped with limit bolts to restrict maximum travel to the manufacturer's standard limits. Unless otherwise indicated, the length of the flexible connectors shall be as recommended by the manufacturer for the service intended. Internal sleeves or liners, compatible with circulating medium, shall be provided when recommended by the manufacturer. Covers to protect the bellows shall be provided where indicated.

2.6.11 Pipe Supports: Pipe supports shall conform to MSS SP-58 and MSS SP-69.

2.6.12 Valves: Valves shall be Class 125 and shall be suitable for the application. Grooved ends per AWWA C606 may be used for water service only. Valves in nonboiler external piping shall meet the material, fabrication and operating requirements of ASME B31.1. The connection type of all valves shall match the same type of connection required for the piping on which installed.

2.6.12.1 Gate Valves: Gate valves 2-1/2 inches and smaller shall conform to MSS SP-80 bronze rising stem, threaded, solder, or flanged ends. Gate valves 3 inches and larger shall conform to MSS SP-70 cast iron bronze trim, outside screw and yoke, flanged, or threaded ends.

2.6.12.2 Globe Valves: Globe valves 2-1/2 inches and smaller shall conform to MSS SP-80, bronze, threaded, soldered, or flanged ends. Globe valves 3 inches and larger shall conform to MSS SP-85, cast iron, bronze trim, flanged, or threaded ends.

2.6.12.3 Check Valves: Check valves 2-1/2 inches and smaller shall conform to MSS SP-80, bronze, threaded, soldered, or flanged ends. Check valves 3 inches and larger shall conform to MSS SP-71, cast iron, bronze trim, flanged, or threaded ends.

2.6.12.4 Angle Valves: Angle valves 2-1/2 inches and smaller shall conform to MSS SP-80 bronze, threaded, soldered, or flanged ends. Angle valves 3 inches and larger shall conform to MSS SP-85, cast iron, bronze trim, flanged, or threaded ends.

2.6.12.5 Ball Valves: Ball valves 1/2 inch and larger shall conform to FS WW-V-35, ductile iron or bronze, threaded, soldered, or flanged ends.

2.6.12.6 Plug Valves: Plug valves 2 in. and larger shall conform to MSS SP-78. Plug valves smaller than 2 in. shall conform to ASME B16.34.

2.6.12.7 Grooved End Valves: Valves with grooved ends per AWWA C606 may be used if the valve manufacturer certifies that their performance meets the requirements of the standards indicated for each type of valve.

2.6.12.8 Balancing Valves: Balancing valves shall have meter connections with positive shutoff valves. An integral pointer shall register the degree of valve opening. Valves shall be calibrated so that flow rate can be determined when valve opening in degrees and pressure differential across valve is known. Each balancing valve shall be constructed with internal seals to prevent leakage and shall be supplied with preformed insulation. Valves shall be suitable for 250 degrees F temperature and working pressure of the pipe in which installed. Valve bodies shall be provided with tapped openings and pipe extensions with shutoff valves outside of pipe insulation. The pipe extensions shall be provided with quick connecting hose fittings for a portable meter to measure the pressure differential. One portable differential meter shall be furnished. The meter suitable for the operating pressure specified shall be complete with hoses, vent, and shutoff valves, and carrying case. In lieu of the balancing valve with integral metering connections, a ball valve or plug valve with a separately installed orifice plate or venturi tube may be used for balancing.

2.6.12.9 Automatic Flow Control Valves: In lieu of the specified balancing valves, automatic flow control valves may be provided to maintain constant flow and shall be designed to be sensitive to pressure differential across the valve to provide the required opening. Valves shall be selected for the flow required and provided with a permanent nameplate or tag carrying a permanent record of the factory-determined flow rate and flow control pressure levels. Valves shall control the flow within 5 percent of the tag rating. Valves shall be suitable for the maximum operating pressure of 125 psi or 150 percent of the system operating pressure, whichever is greater. Where the available system pressure is not adequate to provide the minimum pressure differential that still allows flow control, the system pump head capability shall be increased. Valves shall be suitable for 250 degrees F temperature service. Valve materials shall be same as specified for the heating system check, globe, angle, and gate valves. Valve operator shall be the electric motor type or pneumatic type as applicable. Valve operator shall be capable of positive shutoff against the system pump head. Valve bodies shall be provided with tapped openings and pipe extensions with shutoff valves outside of pipe insulation. The pipe extensions shall be provided with quick connecting hose fittings for a portable meter to measure the pressure differential across the automatic flow

control valve. A portable meter shall be provided with accessory kit as recommended for the project by the automatic valve manufacturer.

2.6.12.10 Butterfly Valves: Butterfly valves shall be 2-flange type or lug wafer type, and shall be bubbletight at 150 psig. Valve bodies shall be cast iron, malleable iron, or steel. ASTM A 167, Type 404 or Type 316, corrosion resisting steel stems, bronze, or corrosion resisting steel discs, and synthetic rubber seats shall be provided. Valves smaller than 8 inches shall have throttling handles with a minimum of seven locking positions. Valves 8 inches and larger shall have totally enclosed manual gear operators with adjustable balance return stops and position indicators. Valves in insulated lines shall have extended neck to accommodate insulation thickness.

2.6.12.11 Drain valves: Drain valves shall be provided at each drain point of blowdown as recommended by the boiler manufacturer. Piping shall conform to ASME BPV IV and ASTM A 53.

2.6.12.12 Safety Valves: Safety valves shall have steel bodies and shall be equipped with corrosion-resistant trim and valve seats. The valves shall be properly guided and shall be positive closing so that no leakage can occur. Adjustment of the desired back-pressure shall cover the range between 2 and 10 psig. The adjustment shall be made externally, and any shafts extending through the valve body shall be provided with adjustable stuffing boxes having renewable packing. Boiler safety valves of proper size and of the required number, in accordance with ASME BPV IV, shall be installed so that the discharge will be through piping extended to a location as indicated. Each discharge pipe for hot water service shall be pitched away from the valve seat.

2.6.13 Strainers: Basket and "Y" type strainers shall be the same size as the pipelines in which they are installed. The strainer bodies shall be heavy and durable, fabricated of cast iron, and shall have bottoms drilled and tapped with a gate valve attached for blowdown purposes. Strainers shall be designed for 125 psig service and 200 degrees F. The bodies shall have arrows clearly cast on the sides indicating the direction of flow. Each strainer shall be equipped with an easily removable cover and sediment screen. The screen shall be made of 0.795 mm thick 22 gauge monel with small perforations numbering not less than 620,000 per square m 400 per square inch to provide a net free area through the basket of at least 3.30 times that of the entering pipe. The flow shall be into the screen and out through the perforations.

2.6.14 Pressure Gauges: Gauges shall conform to ASME B40.1 and shall be provided with throttling type needle valve or a pulsation dampener and shutoff valve. Minimum dial size shall be 3-1/2 inches. A pressure gauge shall be provided for each boiler in a visible location on the boiler.

2.6.15 Thermometers: Thermometers shall be provided with wells and separable corrosion-resistant steel sockets. Thermometers for inlet water and outlet water for each hot water boiler shall be provided in a visible location on the boiler. Thermometers shall have brass, malleable iron, or aluminum alloy case and frame, clear protective face, permanently stabilized glass tube with indicating-fluid column, white face, black numbers, and a minimum 9 inch scale.

2.6.16 Air Vents

2.6.16.1 Manual Air Vents: Manual air vents shall be brass or bronze valves or cocks suitable for the pressure rating of the piping system and furnished with threaded plugs or caps.

2.6.16.2 Automatic Air Vents: Automatic air vents shall be 20 mm (3/4 inch) 3/4 inch quick-venting float and vacuum air valves. Each air vent valve shall have a large port permitting the expulsion of the air without developing excessive back pressure, a noncollapsible metal float which will close the valve and prevent the loss of water from the system, an air seal that will effectively close and prevent the re-entry of air into the system when subatmospheric pressures prevail therein, and a thermostatic member that will close the port against the passage of steam from the system. The name of the manufacturer shall be

clearly stamped on the outside of each valve. The air vent valve shall be suitable for the pressure rating of the piping system.

2.7 ELECTRICAL EQUIPMENT: Electric motor-driven equipment shall be provided complete with motors, motor starters, and necessary control devices. Electrical equipment, motor control devices, motor efficiencies and wiring shall be as specified in Section 16415 ELECTRICAL WORK, INTERIOR. Motors which are not an integral part of a packaged boiler shall be rated for high efficiency service. Motors which are an integral part of the packaged boiler shall be the highest efficiency available by the manufacturer of the packaged boiler. Motor starters shall be provided complete with properly sized thermal overload protections and other appurtenances necessary for the motor control specified. Starters shall be furnished in general purpose enclosures. Manual or automatic control and protective or signal devices required for the operation specified and any control wiring required for controls and devices but not shown shall be provided.

2.7.1 Motor Ratings: Motors shall be suitable for the voltage and frequency provided. Motors 375 W (1/2 hp) and larger shall be three-phase, unless otherwise indicated. Motors shall be of sufficient capacity to drive the equipment at the specified capacity without exceeding the nameplate rating on the motor.

2.7.2 Motor Controls: Motor controllers shall be provided complete with properly sized thermal overload protection. Manual or automatic control and protective or signal devices required for the operation specified and any wiring required to such devices shall be provided. Where two-speed or variable-speed motors are indicated, solid-state variable-speed controllers may be provided to accomplish the same function. Solid state variable speed controllers shall be utilized for fractional through 10 hp ratings. Adjustable frequency drives shall be used for larger motors.

2.8 INSULATION: Shop and field-applied insulation shall be as specified in Section 15250 THERMAL INSULATION FOR MECHANICAL SYSTEMS.

2.9 TOOLS: Special tools shall be furnished. Special tools shall include uncommon tools necessary for the operation and maintenance of boilers, burners, pumps, fans, controls, meters, special piping systems, and other equipment. Small hand tools shall be furnished within a suitable cabinet, mounted where directed.

2.9.1 Tube Cleaner: If a watertube boiler is being furnished, a water-driven tube cleaner with three rotary cutters and rotary wire brush complete with the necessary length of armored water hose, valves, and other appurtenances necessary for operation shall be provided. Tube cleaner and rotary brush shall be provided for each size of water tube in the boiler, with one extra set of cutters for each size cleaner. Necessary valves and fittings shall be provided to permit ready connection of the cleaner hose to a high-pressure pump for cold water supply to operate the cleaner.

2.9.2 Tube Brush: If a firetube boiler is being furnished, a tube brush, with steel bristles and jointed handle of sufficient length to clean full length of firetubes, shall be provided.

2.9.3 Wrenches: Wrenches shall be provided as required for specialty fittings such as manholes, handholes, and cleanouts. One set of extra gaskets shall be provided for all manholes and handholes, for pump barrels, and other similar items of equipment. Gaskets shall be packaged and properly identified.

2.10 BOILER WATER TREATMENT: The water treatment system shall be capable of feeding chemicals and bleeding the system to prevent corrosion and scale within the boiler and piping distribution system. The water shall be treated to maintain the conditions recommended by the boiler manufacturer. Chemicals shall meet required federal, state, and local environmental regulations for the treatment of boilers and discharge to the sanitary sewer. The services of a company regularly engaged in the treatment of boilers shall be used to determine the correct chemicals and concentrations required for water treatment. The company shall maintain the chemical treatment and provide all chemicals required for a

period of 1 year from the date of occupancy. Filming amines and proprietary chemicals shall not be used. The water treatment chemicals shall remain stable throughout the operating temperature range of the system and shall be compatible with pump seals and other elements of the system.

2.10.1 MakeUp Water Analysis: The makeup water conditions reported per ASTM D 596 are as follows:

Date of Sample	_____
Temperature	_____ degrees C degrees F
Silica (SiO2)	_____ ppm (mg/1)
Insoluble	_____ ppm (mg/1)
Iron and Aluminum Oxides	_____ ppm (mg/1)
Calcium (Ca)	_____ ppm (mg/1)
Magnesium (Mg)	_____ ppm (mg/1)
Sodium and Potassium (Na and K)	_____ ppm (mg/1)
Carbonate (HCO3)	_____ ppm (mg/1)
Sulfate (SO4)	_____ ppm (mg/1)
Chloride (C1)	_____ ppm (mg/1)
Nitrate (NO3)	_____ ppm (mg/1)
Turbidity	_____ unit
pH	_____
Residual Chlorine	_____ ppm (mg/1)
Total Alkalinity	_____ epm (meq/1)
Noncarbonate Hardness	_____ epm (meq/1)
Total Hardness	_____ epm (meq/1)
Dissolved Solids	_____ ppm (mg/1)
Fluorine	_____ ppm (mg/1)
Conductivity	_____ microhm, cm

Contractor shall request copy of this data from Vandenberg PWC and provide to boiler manufacturer for the recommended treatment.

2.10.2 Boiler Water Limits: The boiler manufacturer shall be consulted for the determination of the boiler water chemical composition limits. The boiler water limits shall be as follows unless dictated differently by the boiler manufacturer's recommendations:

Causticity	20-200 ppm
Total Alkalinity (CACO3)	900-1200 ppm
Phosphate	30-60 ppm
Tanin	Medium
Dissolved Solids	3000-5000 ppm
Suspended Solids	300 ppm Max
Sodium Sulfite	20-40 ppm Max
Silica	Less than 150 ppm
Dissolved Oxygen	Less than 7 ppm
Iron	10 ppm
pH (Condensate)	7 - 8
Sodium Sulfite	20-40 ppm
Hardness	Less than 2 ppm
pH	9.3 - 9.9

2.10.3 Water Softening System: The water softening system shall be as specified in Section 11250 WATER SOFTENERS, CATION-EXCHANGE (SODIUM CYCLE).

2.10.4 Chemical Feed Pumps: One pump shall be provided for each chemical feed tank. The chemical feed pumps shall be positive displacement diaphragm type. The capacity of the pumps shall be adjustable from 0 to 100 percent while in operation. The discharge pressure of the pumps shall be not less than 1.5 times the pressure at the point of connection. The pumps shall be provided with a pressure relief valve and a check valve mounted in the pump discharge.

2.10.5 Tanks: The tanks shall be constructed of high density polyethylene with a hinged cover. The tanks shall have sufficient capacity to require recharging only once per 7 days during normal operation. A level indicating device shall be included with each tank. An electric agitator shall be provided for each tank.

2.10.6 Injection Assemblies: An injection assembly shall be provided at each chemical injection point located along the boiler piping as indicated. The injection assemblies shall be constructed of stainless steel. The discharge of the assemblies shall extend to the centerline of the piping. Each assembly shall include a shutoff valve and check valve at the point of entrance into the water line.

2.10.7 Water Meter: The water meter shall be provided with an electric contacting register and remote accumulative counter. The meter shall be installed within the makeup water line, as indicated.

2.10.8 Water Treatment Control Panel: The control panel shall be a NEMA 12 enclosure suitable for surface mounting. The panel shall be constructed of steel with a hinged door and lock. The panel shall contain, as a minimum, the following functions identified with a laminated plastic nameplate:

a. Main power switch and indicating light

b. MAN-OFF-AUTO selector switch

c. Indicating lamp for blow down

d. Indicating lamp for each chemical feed pump

e. Indicating lamp for the water softener

2.10.9 Sequence of Operation: The flow rate of chemical addition shall be based upon metering the makeup water. The boiler shall be provided with automatic blowdown based upon conductivity or boiler load. The required rate of chemical feed and boiler blowdown shall be determined by the water treatment company.

2.10.10 Chemical Shot Feeder: A shot feeder shall be provided as indicated. Size and capacity of feeder shall be based upon local requirements and water analysis. The feeder shall be furnished with an air vent, gauge glass, funnel, valves, fittings, and piping.

2.10.11 Chemical Piping:: The piping and fittings shall be constructed of schedule 80 PVC.

2.10.12 Test Kits: One test kit of each type required to determine the water quality as outlined within the operation and maintenance manuals shall be provided.

PART 3 EXECUTION

3.1 ERECTION OF BOILER AND AUXILIARY EQUIPMENT: Boiler and auxiliary equipment shall be installed in accordance with manufacturer's written instructions. Proper provision shall be made for expansion and contraction between boiler foundation and floor. This joint shall be packed with suitable nonasbestos rope and filled with suitable compound that will not become soft at a temperature of 100 degrees F. Boilers and firing equipment shall be supported from the foundations by structural steel

completely independent of all brickwork. Boiler supports shall permit free expansion and contraction of each portion of the boiler without placing undue stress on any part of the boiler or setting. Boiler breeching shall be as indicated with full provision for expansion and contraction between all interconnected components.

3.2 PIPING INSTALLATION: Unless otherwise specified, nonboiler external pipe and fittings shall conform to the requirements of ASME B31.1. Pipe installed shall be cut accurately to suit field conditions, shall be installed without springing or forcing, and shall properly clear windows, doors, and other openings. Cutting or other weakening of the building structure to facilitate piping installation will not be permitted. Pipes shall be free of burrs, oil, grease and other foreign material and shall be installed to permit free expansion and contraction without damaging the building structure, pipe, pipe joints, or pipe supports. Changes in direction shall be made with fittings, except that bending of pipe 4 inches and smaller will be permitted provided a pipe bender is used and wide sweep bends are formed. The centerline radius of bends shall not be less than 6 diameters of the pipe. Bent pipe showing kinks, wrinkles, flattening, or other malformations will not be accepted. Vent pipes shall be carried through the roof as directed and shall be properly flashed. Unless otherwise indicated, horizontal supply mains shall pitch down in the direction of flow with a grade of not less than 0.2 percent. 1 inch in 40 feet. Open ends of pipelines and equipment shall be properly capped or plugged during installation to keep dirt or other foreign materials out of the systems. Pipe not otherwise specified shall be uncoated. Unless otherwise specified or shown, final connections to equipment shall be made with malleable-iron unions for steel pipe 2-1/2 inches or less in diameter and with flanges for pipe 3 inches or more in diameter. Unions for copper pipe or tubing shall be brass or bronze. Reducing fittings shall be used for changes in pipe sizes. In horizontal hot water lines, reducing fittings shall be eccentric type to maintain the top of the lines at the same level to prevent air binding.

3.2.1 Cold Water Connections: Cold water fill connections shall be made to the water supply system as indicated. Necessary pipe, fittings, and valves required for water connections between the boiler and cold water main shall be provided as shown. The pressure regulating valve shall be of a type that will not stick or allow pressure to build up on the low side. The valve shall be set to maintain a terminal pressure of approximately 5 psi in excess of the static head on the system and shall operate within a 2 psi tolerance regardless of cold water supply piping pressure and without objectionable noise under any condition of operation.

3.2.2 Hot Water Piping and Fittings: Pipe shall be black steel or copper tubing. Fittings for steel piping shall be black malleable iron or cast iron to suit piping. Fittings adjacent to valves shall suit valve material. Grooved mechanical fittings will not be allowed for water temperatures above 230 degrees F.

3.2.3 Vent Piping and Fittings: Vent piping shall be black steel. Fittings shall be black malleable iron or cast iron to suit piping.

3.2.4 Gauge Piping: Piping shall be copper tubing.

3.2.5 Joints: Joints between sections of steel pipe and between steel pipe and fittings shall be threaded, grooved, flanged or welded as indicated or specified. Except as otherwise specified, fittings 1 inch and smaller shall be threaded; fittings 1-1/4 inches and up to but not including 3 inches shall be either threaded, grooved, or welded; and fittings 3 inches and larger shall be either flanged, grooved, or welded. Pipe and fittings 1-1/4 inches and larger installed in inaccessible conduit or trenches beneath concrete floor slabs shall be welded. Connections to equipment shall be made with black malleable-iron unions for pipe 2-1/2 inches or smaller in diameter and with flanges for pipe 3 inches or larger in diameter. Joints between sections of copper tubing or pipe shall be flared, soldered, or brazed.

3.2.5.1 Threaded Joints: Threaded joints shall be made with tapered threads properly cut and shall be made perfectly tight with a stiff mixture of graphite and oil or with polytetrafluoroethylene tape applied to the male threads only and in no case to the fittings.

3.2.5.2 Welded Joints: Welded joints shall be in accordance with paragraph GENERAL REQUIREMENTS unless otherwise specified. Changes in direction of piping shall be made with welding fittings only; mitering or notching pipe to form elbows and tees or other similar type construction will not be permitted. Branch connections may be made with either welding tees or forged branch outlet fittings, either being acceptable without size limitation. Branch outlet fittings, where used, shall be forged, flared for improved flow characteristics where attached to the run, reinforced against external strains, and designed to withstand full pipe bursting strength. Socket weld joints shall be assembled so that the space between the end of the pipe and the bottom of the socket is no less than 1/16 inch and no more than 1/8 inch.

3.2.5.3 Grooved Mechanical Joints: Grooved mechanical joints may be provided for hot water systems in lieu of unions, welded, flanged, or screwed piping connections in low temperature hot water systems where the temperature of the circulating medium does not exceed 230 degrees F. Grooves shall be prepared according to the coupling manufacturer's instructions. Pipe and groove dimensions shall comply with the tolerances specified by the coupling manufacturer. The diameter of grooves made in the field shall be measured using a "go/no-go" gauge, vernier or dial caliper, or narrow-land micrometer. Groove width and dimension of groove from end of pipe shall be measured and recorded for each change in grooving tool setup to verify compliance with coupling manufacturer's tolerances. Grooved joints shall not be used in concealed locations. Mechanical joints shall use rigid mechanical pipe couplings, except at equipment connections. At equipment connections, flexible couplings may be used. Coupling shall be of the bolted type for use with grooved end pipes, fittings, valves, and strainers. Couplings shall be self-centering and shall engage in a watertight couple.

3.2.5.4 Flared and Brazed Copper Pipe and Tubing: Tubing shall be cut square, and burrs shall be removed. Both inside of fittings and outside of tubing shall be cleaned thoroughly with sand cloth or steel wire brush before brazing. Annealing of fittings and hard-drawn tubing shall not occur when making connections. Installation shall be made in accordance with the manufacturer's recommendations. Mitering of joints for elbows and notching of straight runs of pipe for tees will not be permitted. Brazed joints shall be made in conformance with AWS B2.2, MSS SP-73, and CDA 404/0-RR with flux. Copper-to-copper joints shall include the use of copper-phosphorous or copper-phosphorous-silver brazing metal without flux. Brazing of dissimilar metals (copper to bronze or brass) shall include the use of flux with either a copper-phosphorous, copper-phosphorous-silver or a silver brazing filler metal. Joints for flared fittings shall be of the compression pattern. Swing joints or offsets shall be provided in all branch connections, mains, and risers to provide for expansion and contraction forces without undue stress to the fittings or to short lengths of pipe or tubing. Flared or brazed copper tubing to pipe adapters shall be provided where necessary for joining threaded pipe to copper tubing.

3.2.5.5 Soldered Joints: Soldered joints shall be made with flux and are only acceptable for lines 2 inches and smaller. Soldered joints shall conform to ASME B31.5 and CDA 404/0-RR.

3.2.5.6 Copper Tube Extracted Joint: An extruded mechanical tee joint may be made in copper tube. Joint shall be produced with an appropriate tool by drilling a pilot hole and drawing out the tube surface to form a collar having a minimum height of three times the thickness of the tube wall. To prevent the branch tube from being inserted beyond the depth of the extracted joint, dimpled depth stops shall be provided. The branch tube shall be notched for proper penetration into fitting to assure a free flow joint. Extracted joints shall be brazed using a copper phosphorous classification brazing filler metal. Soldered joints will not be permitted.

3.2.6 Flanges and Unions: Flanges shall be faced true, provided with 1/16 inch thick gaskets, and made square and tight. Where steel flanges mate with cast-iron flanged fittings, valves, or equipment, they shall be provided with flat faces and full face gaskets. Union or flange joints shall be provided in each line immediately preceding the connection to each piece of equipment or material requiring maintenance such as coils, pumps, control valves, and other similar items. Dielectric pipe unions shall be provided between ferrous and nonferrous piping to prevent galvanic corrosion. The dielectric unions shall have

metal connections on both ends. The ends shall be threaded, flanged, or brazed to match adjacent piping. The metal parts of the union shall be separated so that the electrical current is below 1 percent of the galvanic current which would exist upon metal-to-metal contact. Gaskets, flanges, and unions shall be installed in accordance with manufacturer's recommendations.

3.2.7 Branch Connections

3.2.7.1 Branch Connections for Hot Water Systems: Branches from the main shall pitch up or down as shown to prevent air entrapment. Connections shall ensure unrestricted circulation, eliminate air pockets, and permit complete drainage of the system. Branches shall pitch with a grade of not less than 1 inch in 10 feet. When indicated, special flow fittings shall be installed on the mains to bypass portions of the water through each radiator. Special flow fittings shall be standard catalog products and shall be installed as recommended by the manufacturer.

3.2.7.2 Branch Connections for Steam Systems: Branches shall be taken from the supply mains at an angle of 45 degrees above the horizontal, unless otherwise indicated. The branches from return mains shall be taken from the top or sides, unless indicated otherwise. Branches shall pitch up from the mains toward the undripped risers or radiator connections with a grade of not less than 1 inch in 10 feet. Connections to ensure unrestricted circulation, eliminate air pockets, and permit the complete drainage of the system.

3.2.8 Flared, Brazed, and Soldered Copper Pipe and Tubing: Copper tubing shall be flared, brazed, or soldered. Tubing shall be cut square, and burrs shall be removed. Both inside of fittings and outside of tubing shall be cleaned thoroughly with sand cloth or steel wire brush before brazing. Annealing of fittings and hard-drawn tubing shall not occur when making connections. Installation shall be made in accordance with the manufacturer's recommendations. Mitering of joints for elbows and notching of straight runs of pipe for tees will not be permitted. Joints for flared fittings shall be of the compression pattern. Swing joints or offsets shall be provided on branch connections, mains, and risers to provide for expansion and contraction forces without undue stress to the fittings or to short lengths of pipe or tubing. Pipe adapters shall be provided where necessary for joining threaded pipe to copper tubing. Brazed joints shall be made in conformance with MSS SP-73, and CDA 404/0-RR. Copper-to-copper joints shall include the use of copper-phosphorous or copper-phosphorous-silver brazing metal without flux. Brazing of dissimilar metals (copper to bronze or brass) shall include the use of flux with either a copper-phosphorous, copper-phosphorous-silver, or a silver brazing filler metal. Soldered joints shall be made with flux and are only acceptable for lines 50 mm (2 inches) or smaller. Soldered joints shall conform to ASME B31.5 and shall be in accordance with CDA 404/0-RR.

3.2.9 Copper Tube Extracted Joint: An extracted mechanical tee joint may be made in copper tube. Joint shall be produced with an appropriate tool by drilling a pilot hole and drawing out the tube surface to form a collar having a minimum height of three times the thickness of the tube wall. To prevent the branch tube from being inserted beyond the depth of the extracted joint, dimpled depth stops shall be provided. The branch tube shall be notched for proper penetration into fitting to assure a free flow joint. Extracted joints shall be brazed using a copper phosphorous classification brazing filler metal. Soldered joints will not be permitted.

3.2.10 Supports

3.2.10.1 General: Hangers used to support piping 2 inches and larger shall be fabricated to permit adequate adjustment after erection while still supporting the load. Pipe guides and anchors shall be installed to keep pipes in accurate alignment, to direct the expansion movement, and to prevent buckling, swaying, and undue strain. Piping subjected to vertical movement when operating temperatures exceed ambient temperatures shall be supported by variable spring hangers and supports or by constant support hangers.

3.2.10.2 Seismic Requirements for Supports and Structural Bracing: Piping and attached valves shall be supported and braced to resist zone 4 seismic loads as specified in Section 13080 SEISMIC PROTECTION FOR MECHANICAL, ELECTRICAL EQUIPMENT. Structural steel required for reinforcement to properly support piping, headers, and equipment, but not shown, shall be provided in this section. Material used for supports shall be as specified in Section 05120 STRUCTURAL STEEL.

3.2.10.3 Pipe Hangers, Inserts, and Supports: Pipe hangers, inserts, and supports shall conform to MSS SP-58 and MSS SP-69, except as modified herein.

a. Types 5, 12, and 26 shall not be used.

b. Type 3 shall not be used on insulated pipe which has a vapor barrier. Type 3 may be used on insulated pipe that does not have a vapor barrier if clamped directly to the pipe, if the clamp bottom does not extend through the insulation, and if the top clamp attachment does not contact the insulation during pipe movement.

c. Type 18 inserts shall be secured to concrete forms before concrete is placed. Continuous inserts which allow more adjustment may be used if they otherwise meet the requirements for Type 18 inserts.

d. Type 19 and 23 C-clamps shall be torqued per MSS SP-69 and have both locknuts and retaining devices furnished by the manufacturer. Field fabricated C-clamp bodies or retaining devices are not acceptable.

e. Type 20 attachments used on angles and channels shall be furnished with an added malleable-iron heel plate or adapter.

f. Type 24 may be used only on trapeze hanger systems or on fabricated frames.

g. Horizontal pipe supports shall be spaced as specified in MSS SP-69 and a support shall be installed not over 1 foot from the pipe fitting joint at each change in direction of the piping. Pipe supports shall be spaced not over 5 feet apart at valves.

h. Vertical pipe shall be supported at each floor, except at slab-on-grade, and at intervals of not more than 15 feet, not more than 8 feet from end of risers, and at vent terminations.

i. Type 35 guides using steel, reinforced polytetrafluoroethylene (PTFE) or graphite slides shall be provided where required to allow longitudinal pipe movement. Lateral restraints shall be provided as required. Slide materials shall be suitable for the system operating temperatures, atmospheric conditions, and bearing loads encountered.

(1) Where steel slides do not require provisions for restraint of lateral movement, an alternate guide method may be used. On piping 4 inches and larger, a Type 39 saddle may be welded to the pipe and freely rested on a steel plate. On piping under 4 inches, a Type 40 protection shield may be attached to the pipe or insulation and freely rested on a steel slide plate.

(2) Where there are high system temperatures and welding to piping is not desirable, the Type 35 guide shall include a pipe cradle welded to the guide structure and strapped securely to the pipe. The pipe shall be separated from the slide material by at least 4 inches or by an amount adequate for the insulation, whichever is greater.

j. Except for Type 3, pipe hangers on horizontal insulated pipe shall be the size of the outside diameter of the insulation.

k. Piping in trenches shall be supported as indicated.

l. Structural steel attachments and brackets required to support piping, headers, and equipment, but not shown, shall be provided under this section. Material and installation shall be as specified under Section 05120 STRUCTURAL STEEL. Pipe hanger loads suspended from steel joist between panel points shall not exceed 50 pounds. Loads exceeding 50 pounds shall be suspended from panel points.

3.2.10.4 Multiple Pipe Runs: In the support of multiple pipe runs on a common base member, a clip or clamp shall be used where each pipe crosses the base support member. Spacing of the base support member shall not exceed the hanger and support spacing required for any individual pipe in the multiple pipe run. The clips or clamps shall be rigidly attached to the common base member. A clearance of 1/8 inch shall be provided between the pipe insulation and the clip or clamp for piping which may be subjected to thermal expansion.

3.2.11 Anchors: Anchors shall be provided where necessary to localize expansion or to prevent undue strain on piping. Anchors shall consist of heavy steel collars with lugs and bolts for clamping and attaching anchor braces, unless otherwise indicated. Anchor braces shall be installed in the most effective manner to secure the desired results, using turnbuckles where required. Supports, anchors, or stays shall not be attached where they will injure the structure or adjacent construction during installation or by the weight of expansion of the pipeline.

3.2.12 Valves: Valves shall be installed where indicated, specified, and required for functioning and servicing of the systems. Valves shall be safely accessible. Swing check valves shall be installed upright in horizontal lines and in vertical lines only when flow is in the upward direction. Gate and globe valves shall be installed with stems horizontal or above. Valves to be brazed shall be disassembled prior to brazing and all packing removed. After brazing, the valves shall be allowed to cool before reassembling.

3.2.13 Pipe Sleeves: Pipe passing through concrete or masonry walls or concrete floors or roofs shall be provided with pipe sleeves fitted into place at the time of construction. A waterproofing clamping flange shall be installed as indicated where membranes are involved. Sleeves shall not be installed in structural members except where indicated or approved. Rectangular and square openings shall be as detailed. Each sleeve shall extend through its respective wall, floor, or roof. Sleeves through walls shall be cut flush with wall surface. Sleeves through floors shall be cut flush with floor surface. Sleeves through roofs shall extend above the top surface of roof at least 6 inches for proper flashing or finishing. Unless otherwise indicated, sleeves shall be sized to provide a minimum clearance of 1/4 inch between bare pipe and sleeves or between jacket over insulation and sleeves. Sleeves in waterproofing membrane floors, bearing walls, and wet areas shall be galvanized steel pipe or cast-iron pipe. Sleeves in nonbearing walls, floors, or ceilings may be galvanized steel pipe, cast-iron pipe, or galvanized sheet metal with lock-type longitudinal seam. Except in pipe chases or interior walls, the annular space between pipe and sleeve or between jacket over insulation and sleeve in nonfire rated walls shall be sealed as indicated and specified in Section 07920 JOINT SEALING. Metal jackets shall be provided over insulation passing through exterior walls, firewalls, fire partitions, floors, or roofs.

Metal jackets shall not be thinner than 0.006 inch thick aluminum, if corrugated, and 0.016 inch thick aluminum, if smooth.

Metal jackets shall be secured with aluminum or stainless steel bands not less than 3/8 inch wide and not more than 8 inches apart. When penetrating roofs and before fitting the metal jacket into place, a 1/2 inch wide strip of sealant shall be run vertically along the inside of the longitudinal joint of the metal jacket from a point below the backup material to a minimum height of 36 inches above the roof. If the pipe turns from vertical to horizontal, the sealant strip shall be run to a point just beyond the first elbow. When penetrating waterproofing membrane for floors, the metal jacket shall extend from a point below the back-up material to a minimum distance of 2 inches above the flashing. For other areas, the metal

jacket shall extend from a point below the backup material to a point 12 inches above material to a minimum distance of 2 inches above the flashing. For other areas, the metal jacket shall extend from a point below the backup material to a point 12 inches above the floor; when passing through walls above grade, the jacket shall extend at least 4 inches beyond each side of the wall.

3.2.13.1 Optional Modular Mechanical Sealing Assembly: At the option of the Contractor, a modular mechanical type sealing assembly may be installed in the annular space between the sleeve and conduit or pipe in lieu of a waterproofing clamping flange and caulking and sealing specified above. The seals shall include interlocking synthetic rubber links shaped to continuously fill the annular space between the pipe/conduit and sleeve with corrosion-protected carbon steel bolts, nuts, and pressure plates. The links shall be loosely assembled with bolts to form a continuous rubber belt around the pipe with a pressure plate under each bolt head and each nut. After the seal assembly is properly positioned in the sleeve, tightening of the bolt shall cause the rubber sealing elements to expand and provide a watertight seal between the pipe/conduit and the sleeve. Each seal assembly shall be sized as recommended by the manufacturer to fit the pipe/conduit and sleeve involved.

3.2.13.2 Optional Counterflashing: As alternates to caulking and sealing the annular space between the pipe and flashing or metal-jacket-covered insulation and flashing, counterflashing may consist of standard roof coupling for threaded pipe up to 6 inches in diameter, lead flashing sleeve for dry vents with the sleeve turned down into the pipe to form a waterproof joint, or a tack-welded or banded-metal rain shield around the pipe, sealed as indicated.

3.2.13.3 Fire Seal: Where pipes pass through firewalls, fire partitions, or floors, a fire seal shall be provided as specified in Section 07270 FIRESTOPPING.

3.2.14 Balancing Valves: Balancing valves shall be installed as indicated.

3.2.15 Thermometer Wells: A thermometer well shall be provided in each return line for each circuit in multicircuit systems.

3.2.16 Air Vents: Air vents shall be installed where shown or directed. Air vents shall be installed in piping at all system high points. The vent shall remain open until water rises in the tank or pipe to a predetermined level at which time it shall close tight. An overflow pipe from the vent shall be run to a point designated by the Contracting Officer's representative. The inlet to the air vent shall have a gate valve or ball valve.

3.2.17 Escutcheons: Escutcheons shall be provided at all finished surfaces where exposed piping, bare or insulated, passes through floors, walls, or ceilings except in boiler, utility, or equipment rooms. Escutcheons shall be fastened securely to pipe or pipe covering and shall be chromium-plated iron or chromium-plated brass, either one-piece or split pattern, held in place by internal spring tension or setscrews.

3.2.18 Drains: A drain connection with a 1 inch gate valve or 3/4 inch hose bib shall be installed at the lowest point in the return main near the boiler. In addition, threaded drain connections with threaded cap or plug shall be installed on the heat exchanger coil on each unit heater or unit ventilator and wherever required for thorough draining of the system.

3.2.19 Strainer Blow-Down Piping: Strainer blow-down connections shall be fitted with a black steel blow-down pipeline routed to an accessible location and provided with a blow-down valve.

3.2.20 Direct Venting for Combustion Intake Air and Exhaust Air: The intake air and exhaust vents shall be installed in accordance with NFPA 54 and boiler manufacturer's recommendations. The exhaust vent shall be sloped 1/4 inch per ft toward the boiler's flue gas condensate collection point.

3.3 GAS FUEL SYSTEM: Gas piping, fittings, valves, regulators, tests, cleaning, and adjustments shall be in accordance with the Section 15488 GAS PIPING SYSTEMS. NFPA 54 and NFPA 58 shall be complied with unless otherwise specified. Burners, pilots, and all accessories shall be listed in UL-06. The fuel system shall be provided with a gas tight, manually operated, UL listed stop valve at the gas-supply connections, a gas strainer, a pressure regulator, pressure gauges, a burner-control valve, a safety shutoff valve suitable for size of burner and sequence of operation, and other components required for safe, efficient, and reliable operation as specified. Approved permanent and ready facilities to permit periodic valve leakage tests on the safety shutoff valve or valves shall be provided.

3.4 LIQUIFIED PETROLEUM GAS (PROPANE)

3.4.1 Piping and Storage Tank: Liquified petroleum gas (propane) piping and storage tanks shall be installed in accordance with NFPA 58.

3.4.2 Automatic Safety Shutoff Valve: Gas supply line to gas burner shall be equipped with an automatically operated valve designed to shut off the gas supply in case of fire in the immediate vicinity of the burner. The valve shall be thermoelectrically actuated or thermomechanically actuated type and shall be located immediately downstream of the manual shutoff valve at the day tank inside of the building. The automatic safety valve shall be located immediately downstream of the building shutoff devices where gas supply line enters the building. A thermoelectrical or thermomechanical detection device shall be located over the gas burner to activate the valve. A fire shutoff valve may be combined with other automatic shutoff devices if listed in UL-06.

3.4.3 Earthwork: Excavation and backfilling for tanks and piping shall be as specified in Section 02222 EXCAVATION, TRENCHING, AND BACKFILLING FOR UTILITIES SYSTEMS.

3.5 FIELD PAINTING: Ferrous metal not specified to be coated at the factory shall be cleaned, prepared, and painted as specified in Section 09900 PAINTING, GENERAL. Exposed pipe covering shall be painted as specified in Section 09900 PAINTING, GENERAL. Aluminum sheath over insulation shall not be painted.

3.6 HEATING SYSTEM TESTS: Before any covering is installed on pipe or heating equipment, the entire heating system's piping, fittings, and terminal heating units shall be hydrostatically tested and proved tight at a pressure of 1-1/2 times the design working pressure. Before pressurizing system for test, items or equipment (e.g., vessels, pumps, instruments, controls, relief valves) rated for pressures below the test pressure shall be blanked off or replaced with spool pieces. Before balancing and final operating test, test blanks and spool pieces shall be removed; and protected instruments and equipment shall be reconnected. With equipment items protected, the system shall be pressurized to test pressure. Pressure shall be held for a period of time sufficient to inspect all welds, joints, and connections for leaks, but not less than 2 hours. No loss of pressure will be allowed. Leaks shall be repaired and repaired joints shall be retested. Caulking of joints shall not be permitted. System shall be drained and after instruments and equipment are reconnected, the system shall be refilled with service medium and maximum operating pressure applied. The pressure shall be held while inspecting these joints and connections for leaks. The leaks shall be repaired and the repaired joints retested. Upon completion of hydrostatic tests and before acceptance of the installation, the Contractor shall balance the heating system in accordance with Section 15990 TESTING, ADJUSTING AND BALANCING OF HVAC SYSTEMS; and operating tests required to demonstrate satisfactory functional and operational efficiency shall be performed. The operating test shall cover a period of at least 24 hours for each system, and shall include, as a minimum, the following specific information in a report, together with conclusions as to the adequacy of the system:

a. Certification of balancing.

b. Time, date, and duration of test.

c. Outside and inside dry bulb temperatures.

d. Temperature of hot water supply leaving boiler.

e. Temperature of heating return water from system at boiler inlet.

f. Quantity of water feed to boiler.

g. Boiler make, type, serial number, design pressure, and rated capacity.

h. Fuel burner make, model, and rated capacity; ammeter and voltmeter readings for burner motor.

i. Circulating pump make, model, and rated capacity, and ammeter and voltmeter readings for pump motor during operation.

j. Flue-gas temperature at boiler outlet.

k. Percent carbon dioxide in flue-gas.

l. Grade or type and calorific value of fuel.

m. Draft at boiler flue-gas exit.

n. Draft or pressure in furnace.

o. Quantity of water circulated.

p. Quantity of fuel consumed.

q. Stack emission pollutants concentration.

3.6.1 Water Treatment Testing

3.6.1.1 Water Quality Test: The boiler water shall be analyzed prior to the acceptance of the facility by the water treatment company. The analysis shall include the following information recorded in accordance with ASTM D 596.

Date of Sample	_____	
Temperature	_____	degrees C degrees F
Silica (SiO2)	_____	ppm (mg/1)
Insoluble	_____	ppm (mg/1)
Iron and Aluminum Oxides	_____	ppm (mg/1)
Calcium (Ca)	_____	ppm (mg/1)
Magnesium (Mg)	_____	ppm (mg/1)
Sodium and Potassium (Na and K)	_____	ppm (mg/1)
Carbonate (HCO3)	_____	ppm (mg/1)
Sulfate (SO4)	_____	ppm (mg/1)
Chloride (C1)	_____	ppm (mg/1)
Nitrate (NO3)	_____	ppm (mg/1)
Turbidity	_____	unit
pH	_____	
Residual Chlorine	_____	ppm (mg/1)
Total Alkalinity	_____	epm (meq/1)
Noncarbonate Hardness	_____	epm (meq/1)

Total Hardness	_____ epm (meq/1)
Dissolved Solids	_____ ppm (mg/1)
Fluorine	_____ ppm (mg/1)
Conductivity	_____ microhm/cm

If the boiler water is not in conformance with the boiler manufacturer's recommendations, the water treatment company shall take corrective action.

3.6.1.2 Boiler/Piping Test: At the conclusion of the 1 year period, the boiler and condensate piping shall be inspected for problems due to corrosion and scale. If the boiler is found not to conform to the manufacturer's recommendations, and the water treatment company recommendations have been followed, the water treatment company shall provide all chemicals and labor for cleaning or repairing the equipment as required by the manufacturer's recommendations. If corrosion is found within the condensate piping, proper repairs shall be made by the water treatment company.

3.7 CLEANING

3.7.1 Boilers and Piping: After the hydrostatic tests have been made and before the system is balanced and operating tests are performed, the boilers and feed water piping shall be thoroughly cleaned by filling the system with a solution consisting of either 0.5 kg 1 pound of caustic soda or 0.5 kg 1 pound of trisodium phosphate per 100 L50 gallons of water. The proper safety precautions shall be observed in the handling and use of these chemicals. The water shall be heated to approximately 65 degrees C150 degrees F and the solution circulated in the system for a period of 48 hours. The system shall then be drained and thoroughly flushed out with fresh water. Strainers and valves shall be thoroughly cleaned. Prior to operating tests, air shall be removed from all water systems by operating the air vents.

3.7.2 Heating Units: Inside space heating equipment, ducts, plenums, and casing shall be thoroughly cleaned of debris and blown free of small particles of rubbish and dust and then vacuum cleaned before installing outlet faces. Equipment shall be wiped clean, with all traces of oil, dust, dirt, or paint spots removed. Temporary filters shall be provided for fans that are operated during construction, and new filters shall be installed after construction dirt has been removed from the building, and the ducts, plenum, casings, and other items specified have been vacuum cleaned. System shall be maintained in this clean condition until final acceptance. Bearings shall be properly lubricated with oil or grease as recommended by the manufacturer. Belts shall be tightened to proper tension. Control valves and other miscellaneous equipment requiring adjustment shall be adjusted to setting indicated or directed. Fans shall be adjusted to the speed indicated by the manufacturer to meet specified conditions.

3.8 FUEL SYSTEM TESTS

3.8.1 Gas System Test: The gas fuel system shall be tested in accordance with the test procedures outlined in NFPA 54 and NFPA 58.

3.9 FIELD TRAINING: The Contractor shall conduct a training course for the operating staff as designated by the Contracting Officer. The training period shall consist of a total of 4 hours of normal working time and shall start after the system is functionally completed but prior to final acceptance tests. The field instructions shall cover all of the items contained in the operating and maintenance instructions, as well as demonstrations of routine maintenance operations and boiler safety devices. The Contracting Officer shall be notified at least 14 days prior to date of proposed conduction of the training course.

-- End of Section --

INDEX

SECTION 15653

AIR-CONDITIONING SYSTEM (UNITARY TYPE)

Paragraph		Page
1.1	REFERENCES	1
1.2	SUBMITTALS	3
1.3	QUALIFICATIONS	5
1.4	DELIVERY, STORAGE, AND HANDLING	5
1.5	PROJECT/SITE CONDITIONS	5
2.1	STANDARD PRODUCTS	6
2.2	NAMEPLATES	6
2.3	ELECTRICAL WORK	6
2.4	MISCELLANEOUS MATERIALS	6
2.5	AIR-CONDITIONERS	7
2.6	REMOTE CONDENSING UNIT	9
2.7	SYSTEM COMPONENTS	9
2.8	REFRIGERANT LEAK DETECTOR	10
2.9	OXYGEN SENSOR	11
2.10	SIGNS	11
2.11	INSULATION	11
2.12	REFRIGERANT PIPING	11
2.13	FABRICATION	13
3.1	INSTALLATION	14
3.2	TESTS	19
3.3	INSPECTIONS	20
3.4	CLEANING AND ADJUSTING	20
3.5	DEMONSTRATIONS	21

SECTION 15653

AIR-CONDITIONING SYSTEM (UNITARY TYPE)

PART 1 GENERAL

1.1 REFERENCES: The publications listed below form a part of this specification to the extent referenced. The publications are referred to in the text by basic designation only.

AIR CONDITIONING AND REFRIGERATION INSTITUTE (ARI)

ARI 210/240	(1989) Unitary Air-Conditioning and Air-Source Heat Pump Equipment
ARI 270	(1984) Sound Rating of Outdoor Unitary Equipment
ARI 460	(1994) Remote Mechanical-Draft Air-Cooled Refrigerant Condensers
ARI 710	(1986) Liquid-Line Driers
ARI 720	(1988) Refrigerant Access Valves and Hose Connectors
ARI 750	(1987) Thermostatic Refrigerant Expansion Valves
ARI 760	(1987) Solenoid Valves for Use with Volatile Refrigerants

AMERICAN NATIONAL STANDARDS INSTITUTE (ANSI)

ANSI A13.1	(1981; R 1993) Scheme for the Identification of Piping Systems

AMERICAN SOCIETY FOR TESTING AND MATERIALS (ASTM)

ASTM A 53	(1993a) Pipe, Steel, Black and Hot-Dipped, Zinc-Coated Welded and Seamless
ASTM A 307	(1994) Carbon Steel Bolts and Studs, 60 000 PSI Tensile Strength
ASTM A 653	(1994) Steel Sheet, Zinc-Coated (Galvanized) or Zinc-Iron Alloy-Coated (Galvanneled) by the Hot-Dip Process
ASTM B 117	(1994) Operating Salt Spray (Fog) Testing Apparatus
ASTM B 280	(1993a) Seamless Copper Tube for Air Conditioning and Refrigeration Field Service
ASTM C 534	(1994) Preformed Flexible Elastomeric Cellular Thermal Insulation in Sheet and Tubular Form
ASTM D 520	(1984; R 1989) Zinc Dust Pigment
ASTM D 3308	(1991) PTFE Resin Skived Tape
ASTM E 437	(1992) Industrial Wire Cloth and Screens (Square Opening Series)
ASTM F 104	(1993) Nonmetallic Gasket Materials

ASTM F 872 (1984; R 1990) Filter Units, Air Conditioning: Viscous-Impingement Type, Cleanable

AMERICAN SOCIETY OF HEATING, REFRIGERATING AND AIR-CONDITIONING ENGINEERS (ASHRAE)

ASHRAE 15 (1994) Safety Code for Mechanical Refrigeration

ASHRAE 127 (1988) Method of Testing for Rating Computer and Data Processing Room Unitary Air-Conditioners

AMERICAN SOCIETY OF MECHANICAL ENGINEERS (ASME)

ASME B31.1 (1992; B31.1a; B31.1b; B31.1c) Power Piping

ASME B31.5 (1992; B31.5a) Refrigeration Piping

ASME B40.1 (1991) Gauges - Pressure Indicating Dial Type - Elastic Element

ASME BPV VIII Div 1 (1992; Addenda Dec 1992, Dec 1993, Dec 1994) Boiler and Pressure Vessel Code; Section VIII, Pressure Vessels Division 1 - Basic Coverage

ASME BPV IX (1992; Addenda Dec 1992, Dec 1993, Dec 1994) Boiler and Pressure Vessel Code; Section IX, Welding and Brazing Qualifications

AMERICAN WELDING SOCIETY (AWS)

AWS BRH (1991) Brazing Handbook

AWS D1.1 (1994) Structural Welding Code - Steel

FEDERAL SPECIFICATIONS (FS)

FS BB-F-1421 (Rev B) Fluorocarbon Refrigerants

FS QQ-B-654 (Rev A; Am 1; Notice 1) Brazing Alloys, Silver

MANUFACTURERS STANDARDIZATION SOCIETY OF THE VALVE AND FITTINGS INDUSTRY (MSS)

MSS SP-58 (1993) Pipe Hangers and Supports - Materials, Design and Manufacture

MSS SP-69 (1991) Pipe Hangers and Supports - Selection and Application

NATIONAL ELECTRICAL MANUFACTURERS ASSOCIATION (NEMA)

NEMA ICS 6 (1993) Enclosures for Industrial Control and Systems

NEMA MG 1 (1993; Rev 1-1993) Motors and Generators

NEMA MG 2 (1989; R 1992) Safety Standard for Construction and Guide for Selection, Installation, and Use of Electric Motors and Generators

NATIONAL FIRE PROTECTION ASSOCIATION (NFPA)

NFPA 70 (1993) National Electrical Code

NFPA 90A (1993) Installation of Air Conditioning and Ventilating Systems

UNDERWRITERS LABORATORIES (UL)

UL 1995 (1990) Heating and Cooling Equipment

1.2 SUBMITTALS: Government approval is required for submittals with a "GA" designation; submittals having an "FIO" designation are for information only. The following shall be submitted in accordance with Section 01300 SUBMITTAL PROCEDURES:

SD-01 Data

Air-Conditioning/Heat Pump System; GA.

Manufacturer's standard catalog data, prior to the purchase or installation of a particular component, shall be highlighted to show brand name, model number, size, options, performance charts and curves, etc. in sufficient detail to demonstrate compliance with contract requirements. Data shall be submitted for each specified component. Data shall include manufacturer's recommended installation instructions and procedures. If vibration isolation is specified for a unit, vibration isolator literature shall be included containing catalog cuts and certification that the isolation characteristics of the isolators provided meet the manufacturer's recommendations.

Spare Parts Data; FIO.

Spare parts data for each different item of equipment specified, after approval of detail drawings and not later than 1 month prior to the date of beneficial occupancy. The data shall include a complete list of parts and supplies, with current unit prices and source of supply, a recommended spare parts list for 1 year of operation, and a list of the parts recommended by the manufacturer to be replaced on a routine basis.

SD-04 Drawings

Air-Conditioning/Heat Pump System; GA.

Drawings shall provide adequate detail to demonstrate compliance with contract requirements. Drawings shall consist of:

(1) Equipment layouts which identify assembly and installation details.

(2) Piping layouts which identify valves and fittings.

(3) Plans and elevations which identify clearances required for maintenance and operation.

(4) Wiring diagrams which identify each component individually and interconnected or interlocked relationships between components.

(5) Foundation drawings, bolt-setting information, and foundation bolts prior to concrete foundation construction for equipment indicated or required to have concrete foundations.

(6) Details, if piping and equipment are to be supported other than as indicated, which include loadings and type of frames, brackets, stanchions, or other supports.

(7) Automatic temperature control diagrams and control sequences.

(8) Installation details which includes the amount of factory set superheat and corresponding refrigerant pressure/temperature.

SD-06 Instructions

Framed Instructions; FIO.

Framed instructions for posting, at least 2 weeks prior to construction completion.

SD-07 Schedules

Tests; FIO.

A letter, at least 10 working days in advance of each tests, advising the Contracting Officer of the test. Individual letters shall be submitted for the condenser water system, refrigerant system, ductwork leak tests, cooling tower tests, condenser water quality tests, and the system performance tests. Each letter shall identify the date, time, and location for each test.

Demonstrations; GA.

A letter, at least 14 working days prior to the date of the proposed training course, which identifies the date, time, and location for the training.

SD-08 Statements

Qualifications; GA.

A letter listing the qualifying procedures for each welder. The letter shall include supporting data such as test procedures used, what was tested etc., and a list of the names of qualified welders and their identification symbols.

Verification of Dimensions; FIO.

A letter, at least 2 weeks prior to beginning construction, including the date the site was visited, conformation of existing conditions, and any discrepancies found.

SD-09 Reports

Tests; GA.

Six copies of each test containing the information described below in bound 8-1/2 by 11 inch booklets. Individual reports shall be submitted for the refrigerant system and ductwork leak tests.

(1) The date the tests were performed.

(2) A list of equipment used, with calibration certifications.

(3) Initial test summaries.

(4) Repairs/adjustments performed.

(5) Final test results.

Air-Conditioning/Heat Pump System; FIO.

Where the system, components, or equipment are specified to comply with requirements of ARI, ASHRAE, ASME, or UL, proof of such compliance shall be provided. The label or listing of the specified agency shall be acceptable evidence. In lieu of the label or listing, a written certificate from an approved, nationally recognized testing organization equipped to perform such services, stating that the items have been tested and conform to the requirements and testing methods of the specified agency may be submitted. When performance requirements of this project's drawings and specifications vary from standard ARI rating conditions, computer printouts, catalog, or other application data certified by ARI or a nationally recognized laboratory as described above shall be included. If ARI does not have a current certification program that encompasses such application data, the manufacturer may self certify that his application data complies with project performance requirements in accordance with the specified test standards.

Service Organizations; FIO.

A certified list of qualified permanent service organizations for support of the equipment which includes their addresses and qualifications. The service organizations shall be reasonably convenient to the equipment installation and be able to render satisfactory service to the equipment on a regular and emergency basis during the warranty period of the contract.

SD-19 Operation and Maintenance Manuals

Operation Manual; GA.

Six complete copies of an operation manual in bound 8-1/2 by 11 inch booklets listing step-by-step procedures required for system startup, operation, and shutdown. The booklets shall include the manufacturer's name, model number, and parts list. The manuals shall include the manufacturer's name, model number, service manual, and a brief description of all equipment and their basic operating features.

Maintenance Manual; GA.

Six complete copies of maintenance manual in bound 8-1/2 by 11 inch booklets listing routine maintenance procedures, possible breakdowns and repairs, and a trouble shooting guide. The manuals shall include piping and equipment layouts and simplified wiring and control diagrams of the system as installed.

1.3 QUALIFICATIONS: Structural members shall be welded in accordance with Section 05055 WELDING, STRUCTURAL.

1.4 DELIVERY, STORAGE, AND HANDLING: Stored items shall be protected from the weather and contamination. Proper protection and care of all material before, during, and after installation shall be the Contractor's responsibility. Any materials found to be damaged shall be replaced at the Contractor's expense. During installation, piping and similar openings shall be capped to keep out dirt and other foreign matter.

1.5 PROJECT/SITE CONDITIONS

1.5.1 Verification of Dimensions: The Contractor shall become familiar with all details of the work, verify dimensions in the field, and advise the Contracting Officer of any discrepancy before performing any work.

1.5.2 Drawings: Because of the small scale of the drawings, it is not possible to indicate all offsets, fittings, and accessories that may be required. The Contractor shall carefully investigate the plumbing,

fire protection, electrical, structural and finish conditions that would affect the work to be performed and arrange such work accordingly, furnishing required offsets, fittings, and accessories to meet such conditions. Equipment, ductwork, and piping arrangements shall fit into space allotted and allow adequate acceptable clearances for installation, replacement, entry, servicing, and maintenance.

PART 2 PRODUCTS

2.1 STANDARD PRODUCTS: Materials and equipment shall be standard products of a manufacturer regularly engaged in the manufacturing of such products, which are of a similar material, design and workmanship. The standard products shall have been in satisfactory commercial or industrial use for 2 years prior to bid opening. The 2 year use shall include applications of equipment and materials under similar circumstances and of similar size. The 2 years experience shall be satisfactorily completed by a product which has been sold or is offered for sale on the commercial market through advertisements, manufacturer's catalogs, or brochures. Products having less than a 2 year field service record shall be acceptable if a certified record of satisfactory field operation, for not less than 6000 hours exclusive of the manufacturer's factory tests, can be shown. Products shall be supported by a service organization. System components shall be environmentally suitable for the indicated locations.

2.2 NAMEPLATES: Major equipment including compressors, condensers, receivers, heat exchanges, fans, cooling towers, pumps and motors shall have the manufacturer's name, address, type or style, model or serial number, and catalog number on a plate secured to the item of equipment. Plates shall be durable and legible throughout equipment life and made of stainless steel. Plates shall be fixed in prominent locations with nonferrous screws or bolts.

2.3 ELECTRICAL WORK: Electrical equipment, motors, motor efficiencies, and wiring shall be in accordance with Section 16415 ELECTRICAL WORK, INTERIOR. Electrical motor driven equipment specified shall be provided complete with motors, motor starters, and controls. Electrical characteristics shall be as shown, and unless otherwise indicated, all motors of 1 horsepower and above with open, dripproof, totally enclosed, or explosion proof fan cooled enclosures, shall be high efficiency type. Field wiring shall be in accordance with manufacturer's instructions. Each motor shall conform to NEMA MG 1 and NEMA MG 2 and be of sufficient size to drive the equipment at the specified capacity without exceeding the nameplate rating of the motor. Motors shall be continuous duty with the enclosure specified. Motor starters shall be provided complete with thermal overload protection and other appurtenances necessary for the motor control indicated. Motors shall be furnished with a magnetic across-the-line or reduced voltage type starter as required by the manufacturer. Motor duty requirements shall allow for maximum frequency start-stop operation and minimum encountered interval between start and stop. Motors shall be sized for the applicable loads. Motor torque shall be capable of accelerating the connected load within 20 seconds with 80 percent of the rated voltage maintained at motor terminals during one starting period. Motor bearings shall be fitted with grease supply fittings and grease relief to outside of enclosure. Manual or automatic control and protective or signal devices required for the operation specified and any control wiring required for controls and devices specified, but not shown, shall be provided.

2.4 MISCELLANEOUS MATERIALS

2.4.1 Gaskets: Gaskets shall conform to ASTM F 104 - classification for compressed sheet with nitrile binder and acrylic fibers for maximum 700 degrees F service.

2.4.2 Bolts and Nuts: Bolts and nuts, except as required for piping applications, shall be in accordance with ASTM A 307. The bolt head shall be marked to identify the manufacturer and the standard with which the bolt complies in accordance with ASTM A 307.

2.4.3 Pipe Hangers, Inserts, and Supports: Pipe hangers, inserts, and supports shall conform to MSS SP-58 and MSS SP-69.

2.4.4 Escutcheons: Escutcheons shall be chromium-plated iron or chromium-plated brass, either one piece or split pattern, held in place by internal spring tension or set screws.

2.4.5 Pressure Gauge: Gauge shall conform to ASME B40.1, Class 1, 2, or 3, Style X, Type I or III as required) 4-1/2 inches in diameter with phenolic or metal case. Each gauge range shall be selected so that at normal operating pressure, the needle is within the middle-third of the range.

2.4.6 Temperature Gauges: Industrial duty thermometers shall be provided for the required temperature range. Thermometers shall have Celsius scale in 1 degree Fahrenheit scale in 2 degree graduations scale on a white face. The pointer shall be adjustable.

2.4.6.1 Stem Cased-Glass: Stem cased-glass case shall be polished stainless steel or cast aluminum, 9 inches long, with clear acrylic lens, and non-mercury filled glass tube.

2.4.6.2 Bimetallic Dial: Bimetallic dial type case shall be not less than 3-1/2 inches, stainless steel, and shall be hermetically sealed with clear acrylic lens. Bimetallic element shall be silicone dampened and unit fitted with external calibrator adjustment. Accuracy shall be one percent of dial range.

2.4.6.3 Liquid-, Solid-, and Vapor-Filled Dial: Liquid-, solid-, and vapor-filled dial type cases shall be not less than 3-1/2 inches, stainless steel or cast aluminum with clear acrylic lens. Fill shall be nonmercury, suitable for encountered cross-ambients, and connecting capillary tubing shall be double-braided bronze.

2.4.6.4 Thermal Well: Thermal well shall be identical size, 1/2 or 3/4 inch NPT connection, brass or stainless steel. Where test wells are indicated, provide captive plug-fitted type 1/2 inch NPT connection suitable for use with either engraved stem or standard separable socket thermometer or thermostat. Extended neck thermal wells shall be of sufficient length to clear insulation thickness by 1 inch.

2.4.7 Unicellular Plastic Foam: Unicellular plastic foam shall be in accordance with ASTM C 534, Form T, except that D-Factor shall not exceed 0.28 at 75 degrees F mean temperature.

2.4.8 Bird Screen: Screen shall be in accordance with ASTM E 437, Type 1, Class 1, 2 by 2 mesh, 0.063 inch diameter aluminum wire or 0.031 inch diameter stainless steel wire.

2.5 AIR-CONDITIONER: Unit shall be a self-contained type unit with a remote condensing unit and be designed and constructed for automatic control of space conditions. Unit shall be in accordance with ASHRAE 127 and UL 1995. Unit with capacities less than 135,000 Btuh shall conform to ARI 210/240 and produce an Energy Efficiency Ratio (EER) of 10.5 a Seasonal Energy Efficiency Ratio (SEER) of 135,000 Btuh. ARI certification is not required. The system shall be designed and constructed for maximum reliability and ease of maintenance. Necessary redundancy, access to refrigeration circuits, means of troubleshooting, and malfunction alarms shall be provided. Unit shall be provided with necessary fans, air filters, internal dampers, mixing boxes, supplemental heat, and cabinet construction as specified in paragraph "System Components". Evaporator or supply fans shall be double-width, double inlet, forward curved centrifugal scroll type. Condenser or outdoor fans shall be manufacturer's standard for unit specified and may be either propeller or centrifugal scroll type. Fan and condenser motors shall have totally enclosed. Remote unit shall be as specified in paragraph REMOTE CONDENSER/CONDENSING UNIT.

2.5.1 Integral Air Coils: Evaporator and condenser coils shall have nonferrous tubes of 3/8 inch minimum diameter with copper or aluminum fins that are mechanically bonded or soldered to the tubes. Coils shall be protected with a minimum 3 mil thick phenolic or vinyl coating. Casing shall be

galvanized steel or aluminum. Contact of dissimilar metals shall be avoided. Coils shall be tested in accordance with ASHRAE 15 at the factory and be suitable for the working pressure of the installed system. Each coil shall be dehydrated and sealed after testing and prior to evaluation and charging. Each unit shall be provided with a factory operating charge of refrigerant and oil or a holding charge. Units shipped with a holding charge shall be field charged. Separate expansion devices shall be provided for each compressor circuit.

2.5.2 Refrigeration Circuit: Refrigerant-containing components shall comply with ASHRAE 15 and be factory tested, cleaned, dehydrated, charged, and sealed. Refrigerant charging valves and connections, and pumpdown valves shall be provided for each circuit. Filter-drier shall be provided in each liquid line and be reversible-flow type. Refrigerant flow control devices shall be an adjustable superheat thermostatic expansion valve with external equalizer matched to coil, capillary or thermostatic control, and a pilot solenoid controlled, leak-tight, four-way refrigerant flow reversing valve. A refrigerant suction line thermostatic control shall be provided to prevent freeze-up in event of loss of water flow during heating cycle.

2.5.3 Unit Controls: A unit's basic functions and space ambient conditions shall be controllable at one station.

2.5.3.1 Externally Accessible Controls: The following controls shall be externally accessible:

a. Start and stop total system functions.

b. Main power disconnect.

2.5.3.2 Status Indicators: The following status indicators shall be externally visible:

a. Power On.

b. System On.

c. Malfunction.

d. Provision for remote alarm status indication.

2.5.3.3 Space Temperature: Space temperature shall be controlled within plus or 1-1/2 degrees F of the set point over a range of 60 to 90 degrees F with a set point of 68.

2.5.3.4 Safety Controls: Safety controls shall include the following:

a. Fused, unfused or line-break circuit breaker disconnects, as indicated or required.

b. Automatic pump-out or pump-down liquid flooding controls.

c. High refrigerant pressure cutout.

d. Low refrigerant pressure cutout where automatic pump-down is not provided.

e. Accessible hermetic and open compressor low oil pressure cutout.

f. Elapsed time meter for each compressor where load equalization is not incorporated.

g. Lead and lag compressor selector switch, when compatible with system.

2.5.4 Cabinet Construction: Cabinet shall be totally enclosed and wall mountable with unit provided wall bracket. Enclosure surfaces shall be pulsation free, with hinged and removable doors and panels for vertical side or front access to unit components. Routine maintenance access to compressor and system control components shall be possible without unit shut-down. Enclosure surfaces shall be thermally and acoustically insulated. Interior baffle and compartment surfaces shall be galvanized steel. Drain pans shall collect all condensate and be steel with external insulation as required. Surface mounting steel pads and vibration isolating pads shall be provided. Enclosure surfaces shall be prepared, primed and finished. Paint and finishes shall comply with the requirements specified in paragraph "Factory Coating".

2.6 REMOTE CONDENSING UNIT: Units with capacities less than 135,000 Btuh shall produce a maximum ARI sound rating of 95 bels when rated in accordance with ARI 270. Each remote condenser coil shall be fitted with a manual isolation valve and an access valve on the coil side. Saturated refrigerant condensing temperature shall not exceed 120 degrees F at 95 degrees F ambient. Unit shall be provided with low ambient condenser controls to ensure proper operation in an ambient temperature of 35 degrees F. Fan and cabinet construction shall be provided as specified in paragraph "System Components". Fan and condenser motors shall have totally enclosed enclosures.

2.6.1 Air-Cooled Condenser: Unit shall be rated in accordance with ARI 460 and conform to the requirements of UL 1995. Unit shall be factory fabricated, tested, packaged, and self-contained. Unit shall be complete with casing, propeller or centrifugal type fans, heat rejection coils, connecting piping and wiring, and all necessary appurtenances.

2.6.1.1 Connections: Interconnecting refrigeration piping, electrical power, and control wiring between the condensing unit and the indoor unit shall be provided as required and as indicated. Electrical and refrigeration piping terminal connections between condensing unit and evaporator units shall be provided.

2.6.1.2 Head Pressure Control and Liquid Subcooling: Low ambient control for multi-circuited units serving more than one evaporator coil shall provide independent condenser pressure controls for each refrigerant circuit. Controls shall be set to produce a minimum of 95 degrees F saturated refrigerant condensing temperature. Unit shall be provided with a liquid subcooling circuit which shall ensure proper liquid refrigerant flow to the expansion device over the specified application range of the condenser. Unit shall be provide with manufacturer's standard liquid subcooling. Subcooling circuit shall be liquid sealed.

2.6.2 Condensing Coil: Coils shall have copper or aluminum tubes of 3/8 inch minimum diameter with copper or aluminum fins that are mechanically bonded or soldered to the tubes. Coils shall be protected with a 3 mil thick phenolic or vinyl coating. Casing shall be galvanized steel or aluminum. Contact of dissimilar metals shall be avoided. Coils shall be tested in accordance with ASHRAE 15 at the factory and be suitable for the working pressure of the installed system. Each coil shall be dehydrated and sealed after testing and prior to evaluation and charging. Each unit shall be provided with a factory operating charge of refrigerant and oil or a holding charge. Unit shipped with a holding charge shall be field charged. Separate expansion devices shall be provided for each compressor circuit.

2.6.3 Unit Controls: The control system shall be complete with required accessories for regulating condenser pressure by fan cycling, solid-state variable fan speed, modulating condenser coil or fan dampers, flooding the condenser, or a combination of the above. Unit mounted control panels or enclosures shall be constructed in accordance with applicable requirements of NFPA 70 and housed in NEMA ICS 6, Class 1 or 3A enclosures. Controls shall include solid-state speed control, overload protective devices, interface with local and remote components, and intercomponent wiring to terminal block points.

2.7 SYSTEM COMPONENTS

2.7.1 Refrigerant and Oil: Refrigerant shall be one of the fluorocarbon gases that is in accordance with FS BB-F-1421 and has an Ozone Depletion Potential (ODP) of less than or equal to 0.05. Contractor shall provide and install a complete charge of refrigerant for the installed system as recommended by the manufacturer. Except for factory sealed units, two complete charges of lubricating oil for each compressor crankcase shall be furnished. One charge shall be used during the system performance testing period. Following the satisfactory completion of the performance testing, the oil shall be drained and replaced with a second charge. Lubricating oil shall be of a type and grade recommended by the manufacturer for each compressor. Where color leak indicator dye is incorporated, charge shall be in accordance with manufacturer's recommendation.

2.7.2 Fans: Fan wheel shafts shall be supported by either maintenance-accessible lubricated antifriction block-type bearings, or permanently lubricated ball bearings. Unit fans shall be selected to produce the cfm required at the fan total pressure. Motor starters, if applicable, shall be magnetic across-the-line type with a totally enclosed enclosure. Thermal overload protection shall be of the manual or automatic-reset type. Fan wheels or propellers shall be constructed of aluminum or galvanized steel. Centrifugal fan wheel housings shall be of galvanized steel, and both centrifugal and propeller fan casings shall be constructed of aluminum or galvanized steel. Steel elements of fans, except fan shafts, shall be hot-dipped galvanized after fabrication or fabricated of mill galvanized steel. Mill-galvanized steel surfaces and edges damaged or cut during fabrication by forming, punching, drilling, welding, or cutting shall be recoated with an approved zinc-rich compound. Fan wheels or propellers shall be statically and dynamically balanced. Direct-drive fan motors shall be of the multiple-speed variety. Propeller fans shall be direct-drive type with fixed pitch blades. V-belt driven fans shall be mounted on a corrosion protected drive shaft supported by either maintenance-accessible lubricated antifriction block-type bearings, or permanently lubricated ball bearings. Each drive will be independent of any other drive. Drive bearings shall be protected with water slingers or shields.

2.7.3 Primary/Supplemental Heating

2.7.3.2 Electric Heating Coil: Coil shall be an electric duct heater in accordance with UL 1995 and NFPA 70. Coil shall be duct- or unit-mounted. Coil shall be of the nickel chromium resistor, single stage, strip or stainless steel, fin tubular type. Coil shall be provided with a built-in or surface-mounted high-limit thermostat interlocked electrically so that the coil cannot be energized unless the fan is energized. Coil casing and support brackets shall be of galvanized steel or aluminum. Coil shall be mounted to eliminate noise from expansion and contraction and be completely accessible for service.

2.7.4 Air Filters

2.7.4.1 Sectional Cleanable Filters: Cleanable filters shall conform to ASTM F 872.

2.7.6.1 Indoor Cabinet: Indoor cabinets shall be suitable for the specified indoor service and enclose all unit components.

2.7.6.2 Outdoor Cabinet: Outdoor cabinets shall be suitable for outdoor service with a weathertight, insulated and corrosion-protected structure. Cabinets constructed exclusively for indoor service which have been modified for outdoor service are not acceptable.

2.8 REFRIGERANT LEAK DETECTOR: The Contractor shall equip the mechanical room, which contains the refrigeration equipment, with a refrigerant leak detector if the equipment provided utilizes R-123. The refrigerant leak detector shall be a Halogen-Specific detector to sense refrigerant within the mechanical room. The detector shall be specifically designed for area monitoring, and have an adjustable sensitivity such that it can detect refrigerant at or above 3 ppm, and initiate an alarm actuated at a value not greater than 10 ppm. The detector shall be located in the mechanical room where refrigerant from the equipment is likely to concentrate.

2.9 OXYGEN SENSOR: The Contractor shall equip the mechanical room, which contains the refrigeration equipment, with an oxygen sensor if the equipment provided utilizes R-22 or R-134a. The oxygen sensor shall initiate an alarm if oxygen levels in the mechanical room drop below 19.5 volume percent. The sensor shall be specifically designed to measure the percent oxygen level within an area. The sensor shall have an adjustable sensitivity such that it will alarm when the oxygen level is 21 volume percent and below. The sensor shall be located in an area of the mechanical room containing the equipment where refrigerant from a leak is likely to concentrate.

2.10 SIGNS: Metal signs shall be provided having letters not less than 0.5 inches in height designating the main shut-off valves to each refrigerant vessel, the electrical control of the refrigeration equipment, and the pressure limiting device.

2.11 INSULATION

2.11.1 Field Installed Insulation: Field installed insulation shall be as specified in Section 15250 THERMAL INSULATION FOR MECHANICAL SYSTEM.

2.11.2 Factory Installed Insulation: Factory applied insulation shall be as specified for the equipment to be insulated except that refrigerant suction lines shall be insulated with unicellular plastic foam. Insulation shall comply with the fire hazard rating specified in Section 15250 THERMAL INSULATION FOR MECHANICAL SYSTEM.

2.12 REFRIGERANT PIPING: Refrigerant piping, valves, fittings, and accessories shall conform to the requirements of ASHRAE 15 and ASME B31.5, except as specified.

2.12.1 Copper Tubing: Copper tubing shall conform to ASTM B 280 annealed or hard drawn as required. Copper tubing shall be soft annealed where bending is required and hard drawn where no bending is required. Soft annealed copper tubing shall not be used in sizes larger than 1-3/8 inches. Joints shall be brazed except that joints on lines 7/8 inch and smaller may be flared.

2.12.2 Joints and Fittings, Copper Tubing: Copper tube joints and fittings shall be flare joint type with short-shank flare, or solder-joint pressure type. Joints and fittings for brazed joint shall be wrought-copper or forged-brass sweat fittings. Cast sweat-type joints and fittings shall not be allowed for brazed joints.

2.12.3 Valves: Valves shall be pressure and temperature rated for contained refrigerant service and shall comply with ASME B31.5. Metals of construction shall be ferrous or copper based. Atmosphere exposed valve stems shall be stainless steel or corrosion resistant metal plated carbon steel. Valve body connections shall be brazed or welded socket, flanged or combination thereof. Threaded connections shall not be used, except in pilot pressure or gauge lines where maintenance disassembly is required and welded flanges cannot be used. Valves shall be suitable for or fitted with extended copper ends for brazing in-place without disassembly. Ferrous body valves shall be fitted with factory fabricated and brazed copper transitions. To minimize system pressure drops, where practicable, globe valves shall be angle body type, and straight line valves shall be full port ball type. Control valve inlets shall be fitted with integral or adapted strainer or filter where recommended or required by manufacturer. Valves shall be cleaned and sealed moisture-tight.

2.12.3.1 Refrigerant-Stop Valves: Valves, in sizes through 5/8 inch, shall be handwheel operated, straight or angle, packless diaphragm globe type with back-seating stem, brazed ends, except where SAE flare or retained seal cap connections are required. In sizes over 5/8 inch, valves shall be globe or angle type, wrench operated with ground-finish stems, or ball valves, packed especially for refrigerant service, back seated, and provided with seal caps. Refrigerant isolation and shut-off valves shall have retained or captive spindles and facilities for tightening or replacement of the gland packing under line pressure as applicable. Stop valves shall have back-seating plated steel stem, bolted bonnet in sizes 1-1/8 inches OD

and larger, integral or flanged transition brazed socket. Valves in sizes through 2-1/2 inches shall be end-entry body assembly, full-port, floating ball type, with equalizing orifice fitted chrome plated ball, seats and seals of tetrafluoroethylene, chrome plated or stainless steel stem, and seal cap. In sizes 4 inch IPS and larger, and in smaller sizes where carbon steel piping is used, valve bodies shall be tongue and groove flanged and complete with mating flange, gaskets and bolting for socket or butt-weld connection. Purge, charge and receiver valves shall be of manufacturer's standard configuration.

2.12.3.2 Check Valves: Valve shall be designed for service application, spring-loaded type where required, with resilient seat and with flanged body in sizes 1/2 inch and larger. Valve shall provide positive shut-off at 2 psi differential pressure.

2.12.3.3 Liquid Solenoid Valves: Valves shall comply with ARI 760 and be suitable for continuous duty with applied voltages 15 percent under and 5 percent over nominal rated voltage at maximum and minimum encountered pressure and temperature service conditions. Valves shall be direct-acting or pilot-operating type, packless, except that packed stem, seal capped, manual lifting provisions shall be furnished. Solenoid coils shall be moisture-proof, UL approved, totally encapsulated or encapsulated and metal jacketed as required. Valves shall have safe working pressure of 400 psi and a maximum operating pressure differential of at least 200 psi at 85 percent rated voltage. Valves shall have an operating pressure differential suitable for the refrigerant used.

2.12.3.4 Expansion Valves: Expansion valves conform to requirements of ARI 750. Valve shall be of the diaphragm and spring type with internal or external equalizers, and bulb and capillary tubing. Valve shall be provided with an external superheat adjustment along with a seal cap. Internal equalizers may be utilized where flowing refrigerant pressure drop between outlet of the valve and inlet to the evaporator coil is negligible and pressure drop across the evaporator is less than the pressure difference corresponding to degrees F of saturated suction temperature at evaporator conditions. Bulb charge shall be determined by the manufacturer for the application and such that liquid will remain in the bulb at all operating conditions. Gas limited liquid charged valves and other valve devices for limiting evaporator pressure shall not be used without a distributor or discharge tube or effective means to prevent loss of control when bulb becomes warmer than valve body. Pilot-operated valves shall have a characterized plug to provide required modulating control. A de-energized solenoid valve may be used in the pilot line to close the main valve in lieu of a solenoid valve in the main liquid line. An isolatable pressure gauge shall be provided in the pilot line, at the main valve. Automatic pressure reducing or constant pressure regulating expansion valves may be used only where indicated or for constant evaporator loads.

2.12.3.5 Safety Relief Valve: Valve shall be the two-way type. Single type valves shall be used only where indicated. Valve shall bear the ASME code symbol. Valve capacity shall be certified by the National Board of Boiler and Pressure Vessel Inspectors. Valve shall be of an automatically reseating design after activation.

2.12.3.6 Evaporator Pressure Regulators, Direct-Acting: Valve shall include a diaphragm/spring power assembly, external pressure adjustment with seal cap, and pressure gauge port. Valve shall maintain a constant inlet pressure by balancing inlet pressure on diaphragm against an adjustable spring load. Pressure drop at system design load shall not exceed the pressure difference corresponding to a 2 degrees F change in saturated refrigerant temperature at evaporator operating suction temperature. Spring shall be selected for indicated maximum allowable suction pressure range.

2.12.3.7 Refrigerant Access Valves: Refrigerant access valves and hose connections shall be in accordance with ARI 720.

2.12.4 Accessories

2.12.5 Filter Driers: Driers shall conform to ARI 710. Sizes 5/8 inch and larger shall be the full flow, replaceable core type. Sizes)1/2 inch and smaller shall be the sealed type. Cores shall be of suitable

desiccant that will not plug, cake, dust, channel, or break down, and shall remove water, acid, and foreign material from the refrigerant. Filter driers shall be constructed so that none of the desiccant will pass into the refrigerant lines. Minimum bursting pressure shall be 1,500 psi.

2.12.5.1 Sight Glass and Liquid Level Indicator

a. Assembly and Components: Assembly shall be pressure- and temperature-rated and constructed of materials suitable for the service. Glass shall be borosilicate type. Ferrous components subject to condensation shall be electro-galvanized.

b. Gauge Glass: Gauge glass shall include top and bottom isolation valves fitted with automatic checks, and packing followers; red-line or green-line gauge glass; elastomer or polymer packing to suit the service; and gauge glass guard.

c. Bull's-Eye and Inline Sight Glass Reflex Lens: Bull's-eye and inline sight glass reflex lens shall be provided for dead-end liquid service. For pipe line mounting, two plain lenses in one body suitable for backlighted viewing shall be provided.

d. Moisture Indicator: Indicator shall be a self-reversible action, moisture reactive, color changing media. Indicator shall be furnished with full-color-printing tag containing color, moisture and temperature criteria. Unless otherwise indicated, the moisture indicator shall be an integral part of each corresponding sight glass.

2.12.5.2 Vibration Dampeners: Dampeners shall be of the all-metallic bellows and woven-wire type.

2.12.5.3 Flexible Pipe Connectors: Connector shall be pressure and temperature rated for the service in accordance with ASHRAE 15 and ASME B31.5. Connector shall be a composite of interior corrugated phosphor bronze or Type 300 Series Stainless steel, as required for fluid service, with exterior reinforcement of bronze, stainless steel or monel wire braid. Assembly shall be constructed with a safety factor of not less than 4 at 300 degrees F. Unless otherwise indicated, the length of a flexible connector shall be as recommended by the manufacturer for the service intended.

2.12.5.4 Strainers: Strainers used in refrigerant service shall have brass or cast iron body, Y-or angle-pattern, cleanable, not less than 60-mesh noncorroding screen of an area to provide net free area not less than ten times the pipe diameter with pressure rating compatible with the refrigerant service. Screens shall be stainless steel or monel and reinforced spring-loaded where necessary for bypass-proof construction.

2.12.5.5 Brazing Materials: Brazing materials for refrigerant piping shall be in accordance with FS QQ-B-654, Classification BCuP-5.

2.13 FABRICATION

2.13.1 Factory Coating: Unless otherwise specified, equipment and component items, when fabricated from ferrous metal, shall be factory finished with the manufacturer's standard finish, except that items located outside of buildings shall have weather resistant finishes that will withstand 500 hours exposure to the salt spray test specified in ASTM B 117 using a 25 percent sodium chloride solution. Immediately after completion of the test, the specimen shall show no signs of blistering, wrinkling, cracking, or loss of adhesion and no sign of rust creepage beyond 1/8 inch on either side of the scratch mark. Cut edges of galvanized surfaces where hot-dip galvanized sheet steel is used shall be coated with a zinc-rich coating conforming to ASTM D 520, Type I.

2.13.2 Field Painting: Painting required for surfaces not otherwise specified, and finish painting of items only primed at the factory are specified in Section 09900 PAINTING, GENERAL.

2.13.2.1 Color Coding: Color coding for piping identification is specified in Section 09900 PAINTING, GENERAL.

PART 3 EXECUTION

3.1 INSTALLATION: Work shall be performed in accordance with the manufacturer's published diagrams, recommendations, and equipment warranty requirements. Where equipment is specified to conform to the requirements of ASME BPV VIII Div 1 and ASME BPV IX, the design, fabrication, and installation of the system shall conform to ASME BPV VIII Div 1 and ASME BPV IX.

3.1.1 Equipment: Refrigeration equipment and the installation thereof shall conform to ASHRAE 15. Necessary supports shall be provided for all equipment, appurtenances, and pipe as required, including frames or supports for compressors, pumps, cooling towers, condensers, and similar items. Compressors shall be isolated from the building structure. If mechanical vibration isolators are not provided, vibration absorbing foundations shall be provided. Each foundation shall include isolation units consisting of machine and floor or foundation fastenings, together with intermediate isolation material. Other floor-mounted equipment shall be set on not less than a 6 inch concrete pad doweled in place. Concrete foundations for floor mounted pumps shall have a mass equivalent to three times the weight of the components, pump, base plate, and motor to be supported. In lieu of concrete pad foundation, concrete pedestal block with isolators placed between the pedestal block and the floor may be provided. Concrete pedestal block shall be of mass not less than three times the combined pump, motor, and base weights. Isolators shall be selected and sized based on load-bearing requirements and the lowest frequency of vibration to be isolated. Lines connected to pumps mounted on pedestal blocks shall be provided with flexible connectors. Foundation drawings, bolt-setting information, and foundation bolts shall be furnished prior to concrete foundation construction for all equipment indicated or required to have concrete foundations. Concrete for foundations shall be as specified in Section 03300 CONCRETE FOR BUILDING CONSTRUCTION. Equipment shall be properly leveled, aligned, and secured in place in accordance with manufacturer's instructions.

3.1.2 Building Surface Penetrations: Sleeves in nonload bearing surfaces shall be galvanized sheet metal, conforming to ASTM A 653, Coating Class G-90,1.0 mm (20 gauge).20 gauge. Sleeves in load bearing surfaces shall be uncoated carbon steel pipe, conforming to ASTM A 53, Standard weight. Sealants shall be applied to moisture and oil-free surfaces and elastomers to not less than 1/2 inch depth. Sleeves shall not be installed in structural members.

3.1.2.1 General Service Areas: Each sleeve shall extend through its respective wall, floor, or roof, and shall be cut flush with each surface. Pipes passing through concrete or masonry wall or concrete floors or roofs shall be provided with pipe sleeves fitted into place at the time of construction. Sleeves shall be of such size as to provide a minimum of 1/4 inch all-around clearance between bare pipe and sleeves or between jacketed-insulation and sleeves. Except in pipe chases or interior walls, the annular space between pipe and sleeve or between jacket over-insulation and sleeve shall be sealed in accordance with Section 07920 JOINT SEALING.

3.1.2.2 Waterproof Penetrations: Pipes passing through roof or floor waterproofing membrane shall be installed through a 17-ounce copper sleeve, or a 0.032 inch thick aluminum sleeve, each within an integral skirt or flange. Flashing sleeve shall be suitably formed, and skirt or flange shall extend not less than 8 inches from the pipe and be set over the roof or floor membrane in a troweled coating of bituminous cement. The flashing sleeve shall extend up the pipe a minimum of 2 inches above the roof or floor penetration. The annular space between the flashing sleeve and the bare pipe or between the flashing sleeve and the metal-jacket-covered insulation shall be sealed as indicated. Penetrations shall be sealed by either one of the following methods.

a. Waterproofing Clamping Flange: Pipes up to and including 10 inches in diameter passing through roof or floor waterproofing membrane may be installed through a cast iron sleeve with caulking

recess, anchor lugs, flashing clamp device, and pressure ring with brass bolts. Waterproofing membrane shall be clamped into place and sealant shall be placed in the caulking recess.

b. Modular Mechanical Type Sealing Assembly: In lieu of a waterproofing clamping flange and caulking and sealing of annular space between pipe and sleeve or conduit and sleeve, a modular mechanical type sealing assembly may be installed. Seals shall consist of interlocking synthetic rubber links shaped to continuously fill the annular space between the pipe/conduit and sleeve with corrosion protected carbon steel bolts, nuts, and pressure plates. Links shall be loosely assembled with bolts to form a continuous rubber belt around the pipe with a pressure plate under each bolt head and each nut. After the seal assembly is properly positioned in the sleeve, tightening of the bolt shall cause the rubber sealing elements to expand and provide a watertight seal rubber sealing elements to expand and provide a watertight seal between the pipe/conduit seal between the pipe/conduit and the sleeve. Each seal assembly shall be sized as recommended by the manufacturer to fit the pipe/conduit and sleeve involved. The Contractor electing to use the modular mechanical type seals shall provide sleeves of the proper diameters.

3.1.2.3 Escutcheons: Finished surfaces where exposed piping, bare or insulated, pass through floors, walls, or ceilings, except in boiler, utility, or equipment rooms, shall be provided with escutcheons. Where sleeves project slightly from floors, special deep-type escutcheons shall be used. Escutcheon shall be secured to pipe or pipe covering.

3.1.3 Access Panels: Access panels shall be provided for all concealed valves vents, controls, and items requiring inspection or maintenance. Access panels shall be of sufficient size and located so that the concealed items may be serviced and maintained or completely removed and replaced. Access panels shall be as specified in Section 05500 MISCELLANEOUS METALS.

3.1.4 General Piping Installation

3.1.4.1 Brazed Joints: Brazing shall be performed in accordance with AWS BRH, except as modified herein. During brazing, the pipe and fittings shall be filled with a pressure regulated inert gas, such as nitrogen, to prevent the formation of scale. Before brazing copper joints, both the outside of the tube and the inside of the fitting shall be cleaned with a wire fitting brush until the entire joint surface is bright and clean. Brazing flux shall not be used. Surplus brazing material shall be removed at all joints. Steel tubing joints shall be made in accordance with the manufacturer's recommendations. Joints in steel tubing shall be painted with the same material as the baked-on coating within 8 hours after joints are made. Tubing shall be protected against oxidation during brazing by continuous purging of the inside of the piping using nitrogen. Piping shall be supported prior to brazing and not be sprung or forced.

3.1.4.2 Threaded Joints: Threaded joints shall be made with tapered threads and made tight with PTFE tape complying with ASTM D 3308 or equivalent thread-joint compound applied to the male threads only. Not more than three threads shall show after the joint is made.

3.1.4.3 Welded Joints: Welded joints in steel refrigerant piping shall be fusion-welded. Changes in direction of piping shall be made with welded fittings only; mitering or notching pipe or other similar construction to form elbows or tees will not be permitted. Branch connections shall be made with welding tees or forged welding branch outlets. Steel pipe shall be thoroughly cleaned of all scale and foreign matter before the piping is assembled. During welding, the pipe and fittings shall be filled with a pressure regulated inert gas, such as nitrogen, to prevent the formation of scale. Beveling, alignment, heat treatment, and inspection of weld shall conform to ASME B31.1. Weld defects shall be removed and rewelded at no additional cost to the Government. Electrodes shall be stored and dried in accordance with AWS D1.1 or as recommended by the manufacturer. Electrodes that have been wetted or that have lost any of their coating shall not be used.

3.1.4.4 Flanged Joints: Flanged joints shall be assembled square end tight with matched flanges, gaskets, and bolts. Gaskets shall be suitable for use with the refrigerants to be handled. When steel refrigerant piping is used, union or flange joints shall be provided in each line immediately preceding the connection to each piece of equipment requiring maintenance, such as compressors, coils, refrigeration equipment, control valves, and other similar items.

3.1.4.5 Flared Connections: When flared connections are used, a suitable lubricant shall be used between the back of the flare and the nut in order to avoid tearing the flare while tightening the nut.

3.1.4.6 Directional Changes: Changes in direction shall be made with fittings, except that bending of pipe 4 inches and smaller will be permitted, provided a pipe bender is used and wide weep bends are formed. The centerline radius of bends shall not be less than 6 diameters of the pipe. Bent pipe showing kinks, wrinkles, flattening, or other malformations will not be accepted.

3.1.4.7 Functional Requirements: Horizontal supply mains shall pitch down in the direction of flow as indicated. The grade shall not be less than 1 inch in 40 feet. Reducing fittings shall be used for changes in pipe sizes. Open ends of pipelines and equipment shall be capped or plugged during installation to keep dirt or other foreign materials out of the system. Pipe not otherwise specified shall be uncoated. Connections to appliances shall be made with malleable iron unions for steel pipe 2-1/2 inches or less in diameter, and with flanges for pipe 3 inches or more in diameter. Connections between ferrous and copper piping shall be electrically isolated from each other with dielectric unions or flanges. Piping located in air plenums shall conform to NFPA 90A requirements. Pipe and fittings installed in inaccessible conduits or trenches under concrete floor slabs shall be welded.

3.1.4.8 Valves: Isolation gate or ball valves shall be installed on each side of each piece of equipment, at the midpoint of all looped mains, and at any other points indicated or required for draining, isolating, or sectionalizing purpose. Isolation valves may be omitted where balancing cocks are installed to provide both balancing and isolation functions. Each valve except check valves shall be identified. Valves in horizontal lines shall be installed with stems horizontal or above.

3.1.4.9 Air Vents: Air vents shall be provided at all high points, on all water coils, and where indicated to ensure adequate venting of the piping system.

3.1.4.10 Drains: Drains shall be provided at all low points and where indicated to ensure complete drainage of the piping. Drains shall be accessible, and shall consist of nipples and caps or plugged tees unless otherwise indicated.

3.1.5 Flexible Pipe Connectors: Preinsulated flexible pipe connectors shall be attached to other components in strict accordance with the latest printed instructions of the manufacturer to ensure a vapor tight joint. Hangers, when required to suspend the connectors, shall be of the type recommended by the flexible pipe connector manufacturer and shall be provided at the intervals recommended.

3.1.5 Refrigeration Piping: Unless otherwise specified, pipe and fittings installation shall conform to requirements of ASME B31.5. Pipe shall be cut accurately to measurement established at the jobsite and worked into place without springing or forcing. Cutting or otherwise weakening of the building structure to facilitate piping installation will not be permitted without written approval. Pipes shall be cut square, shall have burrs removed by reaming, and shall be installed in a manner to permit free expansion and contraction without damage to joints or hangers. Filings, dust, or dirt shall be wiped from interior of pipe before connections are made.

3.1.5.1 Directional Changes: Changes in direction shall be made with fittings, except that bending of pipe 4 inches and smaller will be permitted, provided a pipe bender is used and wide-sweep bends are formed. The centerline radius of bends shall not be less than 6 diameters of the pipe. Bent pipe showing kinks, wrinkles, or other malformations will not be accepted.

3.1.5.2 Functional Requirements: Piping shall be installed 1/2 inch per 10 feet of pipe in the direction of flow to ensure adequate oil drainage. Open ends of refrigerant lines or equipment shall be properly capped or plugged during installation to keep moisture, dirt, or other foreign material out of the system. Piping shall remain capped until installation. Equipment piping shall be in accordance with the equipment manufacturer's recommendations and the contract drawings.

3.1.5.3 Manual Valves: Stop valves shall be installed on each side of each piece of equipment such as compressors, condensers, evaporators, receivers, and other similar items in multiple-unit installation, to provide partial system isolation as required for maintenance or repair. Angle and globe valves shall be installed with stems horizontal unless otherwise indicated. Ball valves shall be installed with stems positioned to facilitate operation and maintenance. Isolating valves for pressure gauges and switches shall be external to thermal insulation. Safety switches shall not be fitted with isolation valves. Thermal wells for insertion thermometers and thermostats shall extend beyond thermal insulation surface not less than 1 inch. Filter dryers having access ports may be considered a point of isolation. Purge valves shall be provided at all points of systems where accumulated noncondensible gases would prevent proper system operation. Valves shall be furnished to match line size, unless otherwise indicated or approved.

3.1.5.4 Expansion Valves: Expansion valves shall be installed with the thermostatic expansion valve bulb located on top of the suction line when the suction line is less than 2-1/8 inches in diameter and at the 4 o'clock or 8 o'clock position on lines larger than 2-1/8 inches. The bulb shall be securely fastened with two clamps. The bulb shall be insulated. The bulb shall installed in a horizontal portion of the suction line, if possible, with the pigtail on the bottom. If the bulb must be installed in a vertical line, the bulb tubing shall be facing up.

3.1.5.5 Valve Identification: Each system valve, including those which are part of a factory assembly, shall be tagged. Tags shall be in alphanumeric sequence, progressing in direction of fluid flow. Tags shall be embossed, engraved, or stamped plastic or nonferrous metal of various shapes, sized approximately 1-3/8 inch diameter, or equivalent dimension, substantially attached to a component or immediately adjacent thereto. Tags shall be attached with nonferrous, heavy duty, bead or link chain, 14 gauge annealed wire, nylon cable bands or as approved. Tag numbers shall be referenced in Operation and Maintenance Manuals and system diagrams.

3.1.5.6 Vibration Dampers: Vibration damper shall be provided in the suction and discharge lines on spring mounted compressors. Vibration dampers shall be installed parallel with the shaft of the compressor and be anchored firmly at the upstream end on the suction line and the downstream end in the discharge line.

3.1.5.7 Strainers: Strainers shall be provided immediately ahead of solenoid valves and expansion devices and where indicated. Strainers may be an integral part of the expansion valve.

3.1.5.8 Filter Dryer: A liquid line filter dryer shall be provided on each refrigerant circuit located such that all liquid refrigerant passes through a filter dryer. Dryers shall be sized in accordance with the manufacturers recommendations. A dryer shall be installed such that it can be isolated from the system, the isolated portion of the system evacuated, and the filter dryer replaced. Dryers shall be installed in the horizontal position except replaceable core filter dryers may be installed in the vertical position with the access flange on the bottom.

3.1.5.9 Sight Glass: A moisture indicating sight glass shall be installed in all refrigerant circuits down stream of filter dryers and where indicated. Sight glass shall be full line size.

3.1.6 Piping Supports

3.1.6.1 Seismic Requirements: Piping and attached valves shall be supported and braced to resist zone 4 seismic loads as specified under Section 13080 SEISMIC PROTECTION FOR MECHANICAL, ELECTRICAL EQUIPMENT. Structural steel required for reinforcement to properly support piping, headers, and equipment but not shown shall be provided under this section. Material used for support shall be as specified under Section 05210 STRUCTURAL STEEL.

3.1.6.2 Structural Attachments: Attachment to building structure concrete and masonry shall be by cast-in concrete inserts, built-in anchors, or masonry anchor devices. Inserts and anchors shall be applied with a safety factor not less than 5. Supports shall not be attached to metal decking. Masonry anchors for overhead applications shall be constructed of ferrous materials only. Material used for support shall be as specified under Section 05210 STRUCTURAL STEEL.

3.1.7 Pipe Hangers, Inserts, and Supports: Pipe hangers, inserts, and supports shall conform to MSS SP-58 and MSS SP-69, except as modified herein. Pipe hanger types 5, 12, and 26 shall not be used.

3.1.7.1 Hangers: Type 3 shall not be used on insulated piping. Type 24 may be used only on trapeze hanger systems or on fabricated frames.

3.1.7.2 Inserts: Type 18 inserts shall be secured to concrete forms before concrete is placed. Continuous inserts which allow more adjustments may be used if they otherwise meet the requirements for Type 18 inserts.

3.1.7.3 C-Clamps: Type 19 and 23 C-clamps shall be torqued per MSS SP-69 and have both locknuts and retaining devices, furnished by the manufacturer. Field-fabricated C-clamp bodies or retaining devices are not acceptable.

3.1.7.4 Angle Attachments: Type 20 attachments used on angles and channels shall be furnished with an added malleable-iron heel plate or adapter.

3.1.7.5 Horizontal Pipe Supports: Horizontal pipe supports shall be spaced as specified in MSS SP-69 and a support shall be installed not over 1 foot from the pipe fitting joint at each change in direction of the piping. Pipe supports shall be spaced not over 5 feet apart at valves. Pipe hanger loads suspended from steel joist with hanger loads between panel points in excess of 50 pounds shall have the excess hanger loads suspended from panel points.

3.1.7.6 Vertical Pipe Supports: Vertical pipe shall be supported at each floor, except at slab-on-grade, and at intervals of not more than 15 feet, not more than 8 feet from end of risers, and at vent terminations.

3.1.7.7 Pipe Guides: Type 35 guides using, steel, reinforced polytetrafluoroethylene (PTFE) or graphite slides shall be provided where required to allow longitudinal pipe movement. Lateral restraints shall be provided as required. Slide materials shall be suitable for the system operating temperatures, atmospheric conditions, and bearing loads encountered.

3.1.7.8 Steel Slides: Where steel slides do not require provisions for restraint of lateral movement, an alternate guide method may be used. On piping 4 inches and larger, a Type 39 saddle shall be used. On piping under 4 inches, a Type 40 protection shield may be attached to the pipe or insulation and freely rest on a steel slide plate.

3.1.8 Pipe Alignment Guides: Pipe alignment guides shall be provided where indicated for expansion loops, offsets, and bends and as recommended by the manufacturer for expansion joints, not to exceed 5 feet on each side of each expansion joint, and in lines 4 inches or smaller not more than 2 feet on each side of the joint.

3.1.9 Pipe Anchors: Anchors shall be provided wherever necessary or indicated to localize expansion or to prevent undue strain on piping. Anchors shall consist of heavy steel collars with lugs and bolts for clamping and attaching anchor braces, unless otherwise indicated. Anchor braces shall be installed in the most effective manner to secure the desired results using turnbuckles where required. Supports, anchors, or stays shall not be attached where they will injure the structure or adjacent construction during installation or by the weight of expansion of the pipeline. Where pipe and conduit penetrations of vapor barrier sealed surfaces occur, these items shall be anchored immediately adjacent to each penetrated surface, to provide essentially zero movement within penetration seal. Detailed drawings of pipe anchors shall be submitted for approval before installation.

3.1.10 Piping Identification: Each piping system and direction of fluid flow shall be identified in accordance with applicable provisions of ANSI A13.1 with color coded, water, moisture and broad-spectrum temperature resistant, plastic labels.

3.2 TESTS: Tests shall be conducted in the presence of the Contracting Officer. Utilities for testing shall be provided as specified in the SPECIAL CONTRACT REQUIREMENTS. Water and electricity required for the tests will be furnished by the Government. Any material, equipment, instruments, and personnel required for the test shall be provided by the Contractor. The services of a qualified technician shall be provided as required to perform all tests and procedures indicated herein. Field tests shall be coordinated with Section 15990 TESTING, ADJUSTING, AND BALANCING OF HVAC SYSTEMS.

3.2.1 Refrigerant System: After all components of the refrigerant system have been installed and connected, the entire refrigeration system shall be subjected to a pneumatic test as described herein.

3.2.1.1 Preliminary Procedures: Prior to pneumatic testing, equipment which has been factory tested and refrigerant charged as well as equipment which could be damaged or cause personnel injury by imposed test pressure, positive or negative, shall be isolated from the test pressure or removed from the system. Safety relief valves and rupture discs, where not part of factory sealed systems, shall be removed and openings capped or plugged.

3.2.1.2 Pneumatic Test: Pressure control and excess pressure protection shall be provided at the source of test pressure. Valves shall be wide open, except those leading to the atmosphere. Test gas shall be dry nitrogen, with minus 70 degree F dewpoint and less than 5 ppm oil. Test pressure shall be applied in two stages before any refrigerant pipe is insulated or covered. First stage test shall be at 10 psi with every joint being tested with a thick soap or color indicating solution. Second stage tests shall raise the system to the minimum refrigerant leakage test pressure specified in ASHRAE 15 with a maximum test pressure 25 percent greater. Pressure above 100 psig shall be raised in 10 percent increments with a pressure acclimatizing period between increments. The initial test pressure shall be recorded along with the ambient temperature to which the system is exposed. Final test pressures of the second stage shall be maintained on the system for a minimum of 24 hours. At the end of the 24 hour period, the system pressure will be recorded along with the ambient temperature to which the system is exposed. A correction factor of 0.3 psi will be allowed for each degree F change between test space initial and final ambient temperature, plus for increase and minus for a decrease. If the corrected system pressure is not exactly equal to the initial system test pressure, then the system shall be investigated for leaking joints. To repair leaks, the joint shall be taken apart, thoroughly cleaned, and reconstructed as a new joint. Joints repaired by caulking, remelting, or back-welding\brazing shall not be acceptable. Following repair, the entire system shall be retested using the pnuematic tests described above. The entire system shall be reassemblied once the pneumatic tests are satisfactorily completed.

3.2.1.3 Evacuation Test: Following satisfactory completion of the pneumatic tests, the pressure shall be relieved and the entire system shall be evacuated to an absolute pressure of 300 micrometers. During evacuation of the system, the ambient temperature shall be higher than 35 degrees F. No more than one system shall be evacuated at one time by one vacuum pump. Once the desired vacuum has been reached, the vacuum line shall be closed and the system shall stand for 1 hour. If the pressure rises over 500

micrometers after the 1 hour period, then the system shall be evacuated again down to 300 micrometers and let set for another 1 hour period. The system shall not be charged until a vacuum of at least 500 micrometers is maintained for a period of 1 hour without the assistance of a vacuum line. If during the testing the pressure continues to rise, check the system for leaks, repair as required, and repeat the evacuation procedure. During evacuation, pressures shall be recorded by a thermocouple-type, electronic-type, or a calibrated-micrometer type gauge.

3.2.1.4 System Charging and Startup Test: Following satisfactory completion of the evacuation tests, the system shall be charged with the required amount of refrigerant by raising pressure to normal operating pressure and in accordance with manufacturer's procedures. Following charging, the system shall operate with high-side and low-side pressures and corresponding refrigerant temperatures, at design or improved values. The entire system shall be tested for leaks. Fluorocarbon systems shall be tested with halide torch or electronic leak detectors.

3.2.1.5 Refrigerant Leakage: If a refrigerant leak is discovered after the system has been charged, the leaking portion of the system shall immediately be isolated from the remainder of the system and the refrigerant pumped into the system receiver or other suitable container. Under no circumstances shall the refrigerant be discharged into the atmosphere.

3.2.1.6 Contractor's Responsibility: The Contractor shall, at all times during the installation and testing of the refrigeration system, take steps to prevent the release of refrigerants into the atmosphere. The steps shall include, but not be limited to, procedures which will minimize the release of refrigerants to the atmosphere and the use of refrigerant recovery devices to remove refrigerant from the system and store the refrigerant for reuse or reclaim. At no time shall more than 3 ounces of refrigerant be released to the atmosphere in any one occurrence. Any system leaks within the first year shall be repaired in accordance with the requirements herein at no cost to the Government including material, labor, and refrigerant if the leak is the result of defective equipment, material, or installation.

3.2.2 System Performance Tests: After the foregoing tests have been completed and before each refrigeration system is accepted, tests to demonstrate the general operating characteristics of all equipment shall be conducted by a registered professional engineer or an approved manufacturer's start-up representative experienced in system start-up and testing, at such times as directed. Tests shall cover a period of not less than 48 hours for each system and demonstrate that the entire system is functioning in accordance with the drawings and specifications. Corrections and adjustments shall be made as necessary and tests shall be re-conducted to demonstrate that the entire system is functioning as specified. Prior to acceptance, service valve seal caps and blanks over gauge points shall be installed and tightened. Any refrigerant lost during the system startup shall be replaced. If tests do not demonstrate satisfactory system performance, deficiencies shall be corrected and the system shall be retested.

3.3 INSPECTIONS: At the conclusion of the one year period, cooling towers and condensers shall be inspected for problems due to corrosion, scale, and biological growth. If the cooling tower and condenser are found not to conform to the manufacturers recommended conditions, assuming the water treatment company recommendations have been followed; the water treatment company shall provide all chemicals and labor for cleaning or repairing the equipment as required by the manufacturer's recommendations.

3.4 CLEANING AND ADJUSTING

3.4.1 Piping: Prior to testing, pipes shall be cleaned free of scale and thoroughly flushed of all foreign matter. A temporary bypass shall be provided for water coils to prevent flushing water from passing through coils. Strainers and valves shall be thoroughly cleaned. Prior to testing and balancing, air shall be removed from each water system through the use of the air vents. Temporary measures, such as piping the overflow from vents to a collecting vessel shall be taken to avoid water damage during the venting process. Air vents shall be plugged or capped after the system has been vented.

3.4.2 Equipment: Equipment shall be wiped clean, with all traces of oil, dust, dirt, or paint spots removed. System shall be maintained in this clean condition until final acceptance. Bearings shall be lubricated with oil or grease as recommended by the manufacturer. Belts shall be tightened to proper tension. Control valves and other miscellaneous equipment requiring adjustment shall be adjusted to setting indicated or directed.

3.4.3 Testing, Adjusting, and Balancing: Testing, adjusting, and balancing shall be as specified in Section 15990 TESTING, ADJUSTING AND BALANCING OF HVAC SYSTEMS.

3.5 DEMONSTRATIONS: Contractor shall conduct a training course for the operating staff as designated by the Contracting Officer. The training period shall consist of a total 4 hours of normal working time and start after the system is functionally completed but prior to final acceptance tests. The field instructions shall cover all of the items contained in the operation and maintenance manuals as well as demonstrations of routine maintenance operations.

-- End of Section --

INDEX

SECTION 15895

AIR SUPPLY, DISTRIBUTION, VENTILATION AND EXHAUST SYSTEM

Paragraph		Page
1.1	REFERENCES	1
1.2	COORDINATION OF TRADES	4
1.3	DELIVERY AND STORAGE	4
1.4	SUBMITTALS	4
2.1	STANDARD PRODUCTS	6
2.2	ASBESTOS PROHIBITION	6
2.3	NAMEPLATES	6
2.4	EQUIPMENT GUARDS AND ACCESS	6
2.5	PIPING COMPONENTS	7
2.6	ELECTRICAL WORK	10
2.7	CONTROLS	10
2.8	DUCTWORK COMPONENTS	10
2.9	AIR SYSTEMS EQUIPMENT	15
2.10	AIR HANDLING UNITS	17
2.11	FACTORY PAINTING	19
3.1	INSTALLATION	19
3.2	FIELD PAINTING AND PIPING IDENTIFICATION	23
3.3	PIPING HYDROSTATIC TEST	24
3.4	CLEANING AND ADJUSTING	24
3.5	TESTING, ADJUSTING, AND BALANCING	24
3.6	PERFORMANCE TESTS	24
3.7	FIELD TRAINING	24

SECTION 15895

AIR SUPPLY, DISTRIBUTION, VENTILATION, AND EXHAUST SYSTEM

PART 1 GENERAL

1.1 REFERENCES: The publications listed below form a part of this specification to the extent referenced. The publications are referred to in the text by basic designation only.

AIR CONDITIONING AND REFRIGERATION INSTITUTE (ARI)

ARI 410	(1991) Forced-Circulation Air-Cooling and Air-Heating Coils
ARI 430	(1989) Central-Station Air-Handling Units
ARI Guideline D	(1987) Application and Installation of Central Station Air-Handling Units

AIR DIFFUSION COUNCIL (ADC)

ADC 1062:GRD	(1984) Test Codes for Grilles, Registers and Diffusers

AIR MOVEMENT AND CONTROL ASSOCIATION (AMCA)

AMCA 210	(1985) Laboratory Methods of Testing Fans for Rating
AMCA 300	(1994) Reverberant Room Method for Sound Testing of Fans

AMERICAN BEARING MANUFACTURERS ASSOCIATION (ABEMA)

ABEMA 9	(1990) Load Ratings and Fatigue Life for Ball Bearings
ABEMA 11	(1990) Load Ratings and Fatigue Life for Roller Bearings

AMERICAN SOCIETY FOR TESTING AND MATERIALS (ASTM)

ASTM A 47	(1990) Ferritic Malleable Iron Castings
ASTM A 53	(1993a) Pipe, Steel, Black and Hot-Dipped, Zinc-Coated Welded and Seamless
ASTM A 106	(1993) Seamless Carbon Steel Pipe for High-Temperature Service
ASTM A 123	(1989a) Zinc (Hot-Dip Galvanized) Coatings on Iron and Steel Products
ASTM A 167	(1993) Stainless and Heat-Resisting Chromium-Nickel Steel Plate, Sheet, and Strip
ASTM A 181	(1993a) Forgings, Carbon Steel, for General-Purpose Piping
ASTM A 183	(1983; R 1990) Carbon Steel Track Bolts and Nuts
ASTM A 193	(1993a) Alloy-Steel and Stainless Steel Bolting Materials for High-Temperature Service

ASTM A 234	(1992a) Piping Fittings of Wrought Carbon Steel and Alloy Steel for Moderate and Elevated Temperatures
ASTM A 525	(1993) General Requirement for Steel Sheet, Zinc-Coated (Galvanized) by the Hot-Dip Process
ASTM A 536	(1984; R 1993) Ductile Iron Castings
ASTM A 733	(1989) Welded and Seamless Carbon Steel and Austenitic Stainless Steel Pipe Nipples
ASTM B 62	(1993) Composition Bronze or Ounce Metal Castings
ASTM B 75	(1993) Seamless Copper Tube
ASTM B 88	(1993a) Seamless Copper Water Tube
ASTM B 117	(1994) Salt Spray (Fog) Testing
ASTM B 650	(1993) Electrodeposited Engineering Chromium Coatings of Ferrous Substrates
ASTM C 107	(1989) Panel Spalling Testing High-Duty Fireclay Brick
ASTM C 916	(1985; Rev 1990) Adhesives for Duct Thermal Insulation
ASTM C 1071	(1991) Thermal and Acoustical Insulation (Glass Fiber, Duct Lining Material)
ASTM D 520	(!984; R 1989) Zinc Dust Pigment
ASTM D 1384	(1993) Corrosion Test for Engine Coolants in Glassware
ASTM D 1654	(1992) Evaluation of Painted or Coated Specimens Subjected to Corrosive Environments
ASTM D 2000	(1990) Rubber Products in Automotive Applications
ASTM D 3359	(1993) Measuring Adhesion by Tape Test
ASTM E 437	(1992) Industrial Wire Cloth and Screens (Square Opening Series)
ASTM E 84	(1994) Surface Burning Characteristics of Building Materials

AMERICAN SOCIETY OF HEATING, REFRIGERATING AND AIR-CONDITIONING ENGINEERS (ASHRAE)

ASHRAE 52.1	(1992) Gravimetric and Duct-Spot Procedures for Air-Cleaning Devices Used in General Ventilation for Removing Particulate Matter
ASHRAE 68	(1986) Laboratory Method of Testing In-Duct Sound Power Measurement Procedures for Fans

AMERICAN SOCIETY OF MECHANICAL ENGINEERS (ASME)

ASME B1.20.1	(1983; R 1992) Pipe Threads, General Purpose (Inch)
ASME B16.3	(1992) Malleable Iron Threaded Fittings
ASME B16.5	(1988; Errata; B16.5a) Pipe Flanges and Flanged Fittings
ASME B16.9	(1993) Factory-Made Wrought Steel Buttwelding Fittings
ASME B16.11	(1991) Forged Fittings, Socket-Welding and Threaded
ASME B16.18	(1984) Cast Copper Alloy Solder Joint Pressure Fittings
ASME B16.21	(1992) Nonmetallic Flat Gaskets for Pipe Flanges
ASME B16.22	(1989) Wrought Copper and Copper Alloy Solder Joint Pressure Fittings
ASME B16.26	(1988) Cast Copper Alloy Fittings for Flared Copper Tubes
ASME B16.39	(1986) Malleable Iron Threaded Pipe Unions Classes 150, 250, and 300
ASME B31.1	(1992; B31.1a; B31.1b) Power Piping
ASME B40.1	(1991) Gauges - Pressure Indicating Dial Type - Elastic Element

AMERICAN WATER WORKS ASSOCIATION (AWWA)

AWWA C606	(1987) Grooved and Shouldered Joints

EXPANSION JOINT MANUFACTURERS ASSOCIATION (EJMA)

EJMA-01	(1993) EJMA Standards

FEDERAL SPECIFICATIONS (FS)

FS WW-V-35	(Rev C) Valve, Ball

MANUFACTURERS STANDARDIZATION SOCIETY OF THE VALVE AND FITTINGS INDUSTRY (MSS)

MSS SP-25	(1993) Standard Marking System for Valves, Fittings, Flanges and Unions
MSS SP-58	(1993) Pipe Hangers and Supports - Materials, Design and Manufacture
MSS SP-69	(1991) Pipe Hangers and Supports - Selection and Application
MSS SP-70	(1990) Cast Iron Gate Valves, Flanged and Threaded Ends
MSS SP-71	(1990) Cast Iron Swing Check Valves, Flanged and Threaded Ends
MSS SP-80	(1987) Bronze Gate, Globe, Angle and Check Valves

MSS SP-85 (1994) Cast Iron Globe & Angle Valves, Flanged and Threaded Ends

NATIONAL ELECTRICAL MANUFACTURERS ASSOCIATION (NEMA)

NEMA MG 1 (1993) Motors and Generators

NATIONAL FIRE PROTECTION ASSOCIATION (NFPA)

NFPA 90A (1993) Installation of Air Conditioning and Ventilating Systems

SHEET METAL AND AIR CONDITIONING CONTRACTORS' NATIONAL ASSOCIATION (SMACNA)

SMACNA-05 (1992) Fire, Smoke and Radiation Damper Installation Guide for HVAC Systems

SMACNA-06 (1985) HVAC Duct Construction Standards - Metal and Flexible

UNDERWRITERS LABORATORIES (UL)

UL-01 (1994; Supple) Building Materials Directory

UL-03 (1994) Electrical Construction Materials Directory

UL-05 (1994; Supple) Fire Resistance Directory

UL 181 (1994) Factory-Made Air Ducts and Air Connectors

UL 214 (1993) Tests for Flame-Propagation of Fabrics and Films

UL 555 (1990; Rev thru Nov 1993) Fire Dampers

UL 586 (1990) High-Efficiency, Particulate, Air Filter Units

UL 723 (1993; Rev Apr 1994) Test for Surface Burning Characteristics of Building Materials

UL 900 (1994) Test Performance of Air Filter Units

1.2 COORDINATION OF TRADES: Ductwork, piping offsets, fittings, and accessories shall be furnished as required to provide a complete installation and to eliminate interference with other construction.

1.3 DELIVERY AND STORAGE: Equipment delivered and placed in storage shall be stored with protection from the weather, humidity and temperature variations, dirt and dust, or other contaminants.

1.4 SUBMITTALS: Government approval is required for submittals with a "GA" designation; submittals having an "FIO" designation are for information only. The following shall be submitted in accordance with Section 01300 SUBMITTAL PROCEDURES:

SD-01 Data

Components and Equipment Data; GA.

Manufacturer's catalog data shall be included with the detail drawings for the following items. The data shall be highlighted to show model, size, options, etc., that are intended for consideration. Data shall be adequate to demonstrate compliance with contract requirements for the following:

a. Piping Components

b. Ductwork Components

c. Air Systems Equipment

d. Air Handling Units

SD-04 Drawings

Air Supply, Distribution, Ventilation, and Exhaust Equipment; GA.

Drawings shall consist of equipment layout including assembly and installation details and electrical connection diagrams; ductwork layout showing the location of all supports and hangers, typical hanger details, gauge reinforcement, reinforcement spacing rigidity classification, and static pressure and seal classifications; and piping layout showing the location of all guides and anchors, the load imposed on each support or anchor, and typical support details. Drawings shall include any information required to demonstrate that the system has been coordinated and will properly function as a unit and shall show equipment relationship to other parts of the work, including clearances required for operation and maintenance.

SD-06 Instructions

Test Procedures; GA.

Proposed test procedures for piping hydrostatic test, ductwork leak test, and performance tests of systems, at least 2 weeks prior to the start of related testing.

System Diagrams; GA.

Proposed diagrams, at least 2 weeks prior to start of related testing. System diagrams that show the layout of equipment, piping, and ductwork, and typed condensed operation manuals explaining preventative maintenance procedures, methods of checking the system for normal, safe operation, and procedures for safely starting and stopping the system shall be framed under glass or laminated plastic. After approval, these items shall be posted where directed.

SD-07 Schedules

Test Schedules; FIO.

Proposed test schedules for hydrostatic test of piping, ductwork leak test, and performance tests, at least 2 weeks prior to the start of related testing.

Field Training Schedule; GA.

Proposed schedule for field training, at least 2 weeks prior to the start of related training.

SD-08 Statements

Similar Services; FIO.

Statement demonstrating successful completion of similar services on at least 5 projects of similar size and scope, at least 2 weeks prior to submittal of other items required by this section.

SD-09 Reports

Test Reports; FIO.

Test reports for the piping hydrostatic test, ductwork leak test, and performance tests in booklet form, upon completion of testing. Reports shall document phases of tests performed including initial test summary, repairs/adjustments made, and final test results.

SD-13 Certificates

Bolts; FIO.

Written certification from the bolt manufacturer that the bolts furnished comply with the requirements of this specification. The certification shall include illustrations of product markings, and the number of each type of bolt to be furnished.

SD-19 Operation and Maintenance Manuals

Air Supply, Distribution, Ventilation, and Exhaust Manuals; GA.

Six manuals listing step-by-step procedures required for system startup, operation, shutdown, and routine maintenance, at least 2 weeks prior to field training. The manuals shall include the manufacturer's name, model number, parts list, list of parts and tools that should be kept in stock by the owner for routine maintenance including the name of a local supplier, simplified wiring and controls diagrams, troubleshooting guide, and recommended service organization (including address and telephone number) for each item of equipment. Each service organization submitted shall be capable of providing 4 hour onsite response to a service call on an emergency basis.

PART 2 PRODUCTS

2.1 STANDARD PRODUCTS: Components and equipment shall be standard products of a manufacturer regularly engaged in the manufacturing of products that are of a similar material, design and workmanship. The standard products shall have been in satisfactory commercial or industrial use for 2 years before bid opening. The 2-year experience shall include applications of components and equipment under similar circumstances and of similar size. The 2 years must be satisfactorily completed by a product which has been sold or is offered for sale on the commercial market through advertisements, manufacturers' catalogs, or brochures. Products having less than a 2-year field service record will be acceptable if a certified record of satisfactory field operation, for not less than 6000 hours exclusive of the manufacturer's factory tests, can be shown. The equipment items shall be supported by a service organization.

2.2 ASBESTOS PROHIBITION: Asbestos and asbestos-containing products shall not be used.

2.3 NAMEPLATES: Equipment shall have a nameplate that identifies the manufacturer's name, address, type or style, model or serial number, and catalog number.

2.4 EQUIPMENT GUARDS AND ACCESS: Belts, pulleys, chains, gears, couplings, projecting setscrews, keys, and other rotating parts exposed to personnel contact shall be fully enclosed or guarded according to OSHA requirements. High temperature equipment and piping exposed to contact by

personnel or where it creates a potential fire hazard shall be properly guarded or covered with insulation of a type specified.

2.5 PIPING COMPONENTS

2.5.1 Steel Pipe: Steel pipe shall conform to ASTM A 53, Schedule 40, Grade A or B, Type E or S.

2.5.2 Joints and Fittings For Steel Pipe: Joints shall be welded, flanged, threaded, or grooved as indicated. If not otherwise indicated, piping 1 inch and smaller shall be threaded; piping larger than 1 inch and smaller than 3 inches shall be either threaded, grooved, or welded; and piping 3 inches and larger shall be grooved, welded, or flanged. Rigid grooved mechanical joints and fittings may only be used in serviceable aboveground locations where the temperature of the circulating medium does not exceed 230 degrees F. Flexible grooved joints shall be used only as a flexible connector with grooved pipe system. Unless otherwise specified, grooved piping components shall meet the corresponding criteria specified for the similar welded, flanged, or threaded component specified herein. The manufacturer of each fitting shall be permanently identified on the body of the fitting according to MSS SP-25.

2.5.2.1 Welded Joints and Fittings: Welded fittings shall conform to ASTM A 234, and shall be identified with the appropriate grade and marking symbol. Butt-welded fittings shall conform to ASME B16.9. Socket-welded fittings shall conform to ASME B16.11.

2.5.2.2 Flanged Joints and Fittings: Flanges shall conform to ASTM A 181 and ASME B16.5, Class 150. Gaskets shall be nonasbestos compressed material according to ASME B16.21, 1/16 inch thickness, full face or self-centering flat ring type. The gaskets shall contain aramid fibers bonded with styrene butadiene rubber (SBR) or nitrile butadiene rubber (NBR). Bolts, nuts, and bolt patterns shall conform to ASME B16.5. Bolts shall be high or intermediate strength material conforming to ASTM A 193.

2.5.2.3 Threaded Joints and Fittings: Threads shall conform to ASME B1.20.1. Unions shall conform to ASME B16.39, Class 150. Nipples shall conform to ASTM A 733. Malleable iron fittings shall conform to ASME B16.3, type as required to match piping.

2.5.2.4 Dielectric Unions and Flanges: Dielectric unions shall have the tensile strength and dimensional requirements specified. Unions shall have metal connections on both ends threaded to match adjacent piping. Metal parts of dielectric unions shall be separated with a nylon insulator to prevent current flow between dissimilar metals. Unions shall be suitable for the required operating pressures and temperatures. Dielectric flanges shall provide the same pressure ratings as standard flanges and provide complete electrical isolation.

2.5.2.5 Grooved Mechanical Joints and Fittings: Joints and fittings shall be designed for not less than 862 kPa (125 psig)125 psig service and shall be the product of the same manufacturer. Fitting and coupling houses shall be malleable iron conforming to ASTM A 47, Grade 32510; ductile iron conforming to ASTM A 536, Grade 65-45-12; or steel conforming to ASTM A 106, Grade B or ASTM A 53. Gaskets shall be molded synthetic rubber with central cavity, pressure responsive configuration and shall conform to ASTM D 2000 Grade No. 2CA615A15B44F17Z for circulating medium up to 110 degrees C230 degrees F or Grade No. M3BA610A15B44Z for circulating medium up to 93 degrees C.200 degrees F. Grooved joints shall conform to AWWA C606. Coupling nuts and bolts shall be steel and shall conform to ASTM A 183.

2.5.3 Copper Tube: Copper tube shall conform to ASTM B 88, Type K or L.

2.5.4 Joints and Fittings For Copper Tube: Wrought copper and bronze solder-joint pressure fittings shall conform to ASME B16.22 and ASTM B 75. Cast copper alloy solder-joint pressure fittings shall conform to ASME B16.18. Cast copper alloy fittings for flared copper tube shall conform to ASME B16.26 and ASTM B 62. Brass or bronze adapters for brazed tubing may be used for connecting tubing to

flanges and to threaded ends of valves and equipment. Extracted brazed tee joints produced with an acceptable tool and installed as recommended by the manufacturer may be used.

2.5.5 Valves: Valves shall be Class 125 and shall be suitable for the intended application. Valves shall meet the material, fabrication and operating requirements of ASME B31.1. Chain operators shall be provided for valves located 3 meters (10 feet) or higher above the floor. Valves in sizes larger than 1 inch and used on steel pipe systems, may be provided with rigid grooved mechanical joint ends. Such grooved end valves shall be subject to the same requirements as rigid grooved mechanical joints and fittings and, shall be provided by the same manufacturer as the grooved pipe joint and fitting system.

2.5.5.1 Gate Valves: Gate valves 2-1/2 inches and smaller shall conform to MSS SP-80 and shall be bronze with rising stem and threaded, solder, or flanged ends. Gate valves 3 inches and larger shall conform to MSS SP-70 and shall be cast iron with bronze trim, outside screw and yoke, and flanged or threaded ends.

2.5.5.2 Globe Valves: Globe valves 2-1/2 inches and smaller shall conform to MSS SP-80, bronze, threaded, soldered, or flanged ends. Globe valves 3 inches and larger shall conform to MSS SP-85 and shall be cast iron with bronze trim and flanged, or threaded ends.

2.5.5.3 Check Valves: Check valves 2-1/2 inches and smaller shall conform to MSS SP-80 and shall be bronze with threaded, soldered, or flanged ends. Check valves 80 mm (3 inches) and larger shall conform to MSS SP-71 and shall be cast iron with bronze trim and flanged or threaded ends.

2.5.5.4 Angle Valves: Angle valves 2-1/2 inches and smaller shall conform to MSS SP-80 and shall be bronze with threaded, soldered, or flanged ends. Angle valves 3 inches and larger shall conform to MSS SP-85 and shall be cast iron with bronze trim and flanged, or threaded ends.

2.5.5.5 Ball Valves: Ball valves 1/2 inch and larger shall conform to FS WW-V-35, and shall be ductile iron or bronze with threaded, soldered, or flanged ends.

2.5.5.6 Butterfly Valves: Butterfly valves shall be 2 flange or lug wafer type, and shall be bubble-tight at 150 psig. Valve bodies shall be cast iron, malleable iron, or steel. ASTM A 167, Type 404 or Type 316, corrosion resisting steel stems, bronze or corrosion resisting steel discs, and synthetic rubber seats shall be provided. Valves smaller than 8 inches shall have throttling handles with a minimum of seven locking positions. Valves 8 inches and larger shall have totally enclosed manual gear operators with adjustable balance return stops and position indicators. Valves in insulated lines shall have extended neck to accommodate insulation thickness.

2.5.5.7 Balancing Valves: Balancing valves 50 mm 2 for copper tubing. Valves 25 mm (1 inch) or larger may be all iron with threaded or flanged ends. The valves shall have a square head or similar device and an indicator arc and shall be designed for 250 degrees F. Iron valves shall be lubricated, nonlubricated, or tetrafluoroethylene resin-coated plug valves. In lieu of plug valves, ball valves may be used. Plug valves and ball valves 8 inches or larger shall be provided with manual gear operators with position indicators. Automatic flow control valves may be provided to maintain constant flow, and shall be designed to be sensitive to pressure differential across the valve to provide the required opening. Valves shall be selected for the flow required and provided with a permanent nameplate or tag carrying a permanent record of the factory-determined flow rate and flow control pressure levels. Valves shall control the flow within 5 percent of the tag rating. Valves shall be suitable for the maximum operating pressure of 125 psig or 150 percent of the system operating pressure, whichever is the greater. Where the available system pressure is not adequate to provide the minimum pressure differential that still allows flow control, the system pump head capability shall be appropriately increased. Where flow readings are provided by remote or portable meters, valve bodies shall be provided with tapped openings and pipe extensions with shutoff valves outside of pipe insulation. The pipe extensions shall be provided with quick connecting hose fittings for a portable meter to measure the pressure differential across the

automatic flow control valve. A portable meter furnished with accessory kit as recommended by the automatic valve manufacturer shall be provided. Automatic flow control valve specified may be substituted for venturi tubes or orifice plate flow measuring devices.

2.5.5.8 Air Vents: Manual air vents shall be brass or bronze valves or cocks suitable for pressure rating of piping system and furnished with threaded plugs or caps. Automatic air vents shall be float type, cast iron, stainless steel, or forged steel construction, suitable for pressure rating of piping system.

2.5.6 Strainers: Basket and "Y" type strainers shall be the same size as the pipelines in which they are installed. The strainer bodies shall be fabricated of cast iron with bottoms drilled, and tapped. Strainers shall be designed for 200 degrees F operating conditions. The bodies shall have arrows clearly cast on the sides indicating the direction of flow. Each strainer shall be equipped with removable cover and sediment screen. The screen shall be made of 22 gauge monel, with small perforations numbering not less than 400 per square inch to provide a net free area through the basket of at least 3.30 times that of the entering pipe. The flow shall be into the screen and out through the perforations.

2.5.7 Water Heating System Accessories: Water or steam heating accessories such as expansion tanks shall be as specified in Section 15569 WATER HEATING; OIL, GAS; UP TO 20 MBTUH.

2.5.8 Glycol: The glycol shall be tested according to ASTM D 1384 and shall cause less than 0.5 mils penetration per year for all system metals. The glycol shall contain corrosion inhibitors. Silicon based inhibitors shall not be used. The solution shall be compatible with all wetted items within the system.

2.5.9 Backflow Preventers: Backflow preventers shall be according to Section 15400 PLUMBING, GENERAL PURPOSE.

2.5.10 Flexible Pipe Connectors: Flexible pipe connectors shall be designed for 125 psi or 150 psi service as appropriate for the static head plus the system head, and 250 degrees F, 230 degrees F for grooved end flexible connectors. The flexible section shall be constructed of rubber, tetrafluoroethylene resin, or corrosion-resisting steel, bronze, monel, or galvanized steel. The flexible section shall be suitable for intended service with end connections to match adjacent piping. Flanged assemblies shall be equipped with limit bolts to restrict maximum travel to the manufacturer's standard limits. Unless otherwise indicated, the length of the flexible connectors shall be as recommended by the manufacturer for the service intended. Internal sleeves or liners, compatible with circulating medium, shall be provided when recommended by the manufacturer. Covers to protect the bellows shall be provided where indicated.

2.5.11 Pressure Gauges: Gauges shall conform to ASME B40.1 and shall be provided with throttling type needle valve or a pulsation dampener and shut-off valve. Gauge shall be a minimum of 3-1/2 inches in diameter and shall have a range from 0 psig to approximately 1.5 times the maximum system working pressure.

2.5.12 Thermometers: Thermometers shall have brass, malleable iron, or aluminum alloy case and frame, clear protective face, permanently stabilized glass tube with indicating-fluid column, white face, black numbers, and a 9 inch scale, and shall have rigid stems with straight, angular, or inclined pattern.

2.5.13 Escutcheons: Escutcheons shall be chromium-plated iron or chromium-plated brass, either one piece or split pattern, held in place by internal spring tension or setscrews.

2.5.14 Pipe Hangers, Inserts, and Supports: Pipe hangers, inserts, and supports shall conform to MSS SP-58 and MSS SP-69.

2.5.15 Expansion Joints

2.5.15.1 Slip Joints: Expansion joints shall provide for either single or double slip of the connected pipes, as required or indicated, and for not less than the traverse indicated. The joints shall be designed for working temperature and pressure suitable for the application, but not less than 150 psig, and shall be according to applicable requirements of EJMA-01 and ASME B31.1. End connections shall be flanged or beveled for welding as indicated. Joint shall be provided with an anchor base where required or indicated. Where adjoining pipe is carbon steel, the sliding slip shall be seamless steel plated with a minimum of 2 mils of hard chrome according to ASTM B 650. All joint components shall be suitable for the intended service. Initial setting shall be made according to the manufacturer's recommendations to compensate for ambient temperature at time of installation. Pipe alignment guides shall be installed as recommended by the joint manufacturer, but in any case shall be not more than 5 feet from expansion joint except that in lines 4 inches or smaller, guides shall be installed not more than 2 feet from the joint. Service outlets shall be provided where indicated.

2.5.15.2 Flexible Ball Joints: Flexible ball joints shall conform to EJMA-01 and ASME B31.1 and be constructed of alloys as appropriate for the service intended. Where so indicated, the ball joint shall be designed for packing injection under full line pressure to contain leakage. The joint ends shall be threaded to 2 inches only, grooved, flanged or beveled for welding as indicated or required and shall be capable of absorbing a minimum of 15-degree angular flex and 360 degree rotation. Balls and sockets shall be suitable for the intended service. The exterior spherical surface of carbon steel balls shall be plated with mils of hard chrome according to ASTM B 650. The ball type joints shall be designed and constructed according to EJMA-01 and ASME B31.1 where applicable. Where required, flanges shall conform to ASME B16.5.

2.5.15.3 Bellows Type Joints: Bellows type joints shall be flexible, guided expansion joints. The expansion element shall be stabilized corrosion resistant steel. Bellows type expansion joints shall conform to the applicable requirements of EJMA-01 with internal sleeves. Guiding of piping on both sides of expansion joint shall be according to the published recommendations of the manufacturer of the expansion joint. The joints shall be designed for the working temperature and pressure suitable for the application but not less than 150 psig.

2.5.16 Insulation: Shop and field applied insulation shall be as specified in Section 15250 THERMAL INSULATION FOR MECHANICAL SYSTEMS.

2.5.17 Condensate Drain Lines: Condensate drainage shall be provided for each item of equipment that generates condensate as specified for drain, waste, and vent piping systems in Section 15400 PLUMBING, GENERAL PURPOSE.

2.6 ELECTRICAL WORK: Electrical motor-driven equipment specified shall be provided complete with motor, motor starter, and controls. Unless otherwise specified, electric equipment, including wiring and motor efficiencies, shall be according to Section 16415 ELECTRICAL WORK, INTERIOR. Electrical characteristics and enclosure type shall be as shown. Unless otherwise indicated, motors of 1 hp and above shall be high efficiency type. Motor starters shall be provided complete with thermal overload protection and other appurtenances necessary. Each motor shall be according to NEMA MG 1 and shall be of sufficient size to drive the equipment at the specified capacity without exceeding the nameplate rating of the motor. Manual or automatic control and protective or signal devices required for the operation specified, and any control wiring required for controls and devices, but not shown, shall be provided. Where two-speed or variable-speed motors are indicated, solid-state variable-speed controller may be provided to accomplish the same function. Solid-state variable-speed controllers shall be utilized for motors rated 10 hp or less. Adjustable frequency drives shall be used for larger motors.

2.7 CONTROLS: Controls shall be provided as specified in Section 15950 HEATING, VENTILATING AND AIR CONDITIONING (HVAC) CONTROL SYSTEMS.

2.8 DUCTWORK COMPONENTS

2.8.1 Metal Ductwork: All aspects of metal ductwork construction, including all fittings and components, shall comply with SMACNA-06 unless otherwise specified. Elbows shall be radius type with a centerline radius of 1-1/2 times the width or diameter of the duct where space permits. Otherwise, elbows having a minimum radius equal to the width or diameter of the duct or square elbows with factory fabricated turning vanes may be used. Static pressure Class 1/2, 1, and 2 inch w.g. ductwork shall meet the requirements of Seal Class C. Class 3 through 10 inch shall meet the requirements of Seal Class A. Sealants shall conform to fire hazard classification specified in Section 15250 THERMAL INSULATION FOR MECHANICAL SYSTEMS. Pressure sensitive tape shall not be used as a sealant. Spiral lock seam duct, and flat oval shall be made with duct sealant and locked with not less than 3 equally spaced drive screws or other approved methods indicated in SMACNA-06. The sealant shall be applied to the exposed male part of the fitting collar so that the sealer will be on the inside of the joint and fully protected by the metal of the duct fitting. One brush coat of the sealant shall be applied over the outside of the joint to at least 2 inch band width covering all screw heads and joint gap. Dents in the male portion of the slip fitting collar will not be acceptable. Outdoor air intake ducts and plenums shall be fabricated with watertight soldered or brazed joints and seams.

2.8.1.1 Transitions: Diverging air flow transitions shall be made with each side pitched out a maximum of 15 degrees, for an included angle of 30 degrees. Transitions for converging air flow shall be made with each side pitched in a maximum of 30 degrees, for an included angle of 60 degrees, or shall be as indicated. Factory-fabricated reducing fittings for systems using round duct sections when formed to the shape of the ASME short flow nozzle, need not comply with the maximum angles specified.

2.8.1.2 Metallic Flexible Duct: Metallic type duct shall be single-ply galvanized steel. Duct shall be of corrugated/interlocked, folded and knurled type seam construction, bendable without damage through 180 degrees with a throat radius equal to 1/2 duct diameter. Duct shall conform to UL 181 and shall be rated for positive or negative working pressure of 15 inches water gauge at 350 degrees F when duct is aluminum, and 650 degrees F when duct is galvanized steel or stainless steel.

2.8.1.3 Insulated Nonmetallic Flexible Duct Runouts: Flexible duct runouts shall be used only where indicated. Runout length shall be as shown on the drawings, but shall in no case exceed 10 feet. Runouts shall be preinsulated, factory fabricated, and shall comply with NFPA 90A and UL 181. Either field or factory applied vapor barrier shall be provided. Where coil induction or high velocity units are supplied with vertical air inlets, a streamlined and vaned and mitered elbow transition piece shall be provided for connection to the flexible duct or hose. The last elbow to these units, other than the vertical air inlet type, shall be a die-stamped elbow and not a flexible connector. Insulated flexible connectors may be used as runouts. The insulated material and vapor barrier shall conform to the requirements of Section 15250 THERMAL INSULATION FOR MECHANICAL SYSTEMS. The insulation material surface shall not be exposed to the air stream.

2.8.1.4 General Service Duct Connectors: A flexible duct connector approximately 6 inches in width shall be provided where sheet metal connections are made to fans or where ducts of dissimilar metals are connected. For round/oval ducts, the flexible material shall be secured by stainless steel or zinc-coated, iron clinch-type draw bands. For rectangular ducts, the flexible material locked to metal collars shall be installed using normal duct construction methods. The composite connector system shall comply with UL 214 and be classified as "flame-retarded fabrics" in UL-01.

2.8.2 Ductwork Accessories

2.8.2.1 Duct Access Doors: Access doors shall be provided in ductwork and plenums where indicated and at all air flow measuring primaries, automatic dampers, fire dampers, coils, thermostats, and other apparatus requiring service and inspection in the duct system, and unless otherwise shown, shall conform to SMACNA-06. Access doors shall be provided upstream and downstream of air flow measuring primaries and heating and cooling coils. Doors shall be minimum 15 by 18 inches, unless otherwise

shown. Where duct size will not accommodate this size door, the doors shall be made as large as practicable. Doors 24 by 24 inches or larger shall be provided with fasteners operable from both sides. Doors in insulated ducts shall be the insulated type.

2.8.2.2 Fire Dampers: Fire dampers shall be 1-1/2 hour fire rated unless otherwise indicated. Fire dampers shall conform to the requirements of NFPA 90A and UL 555. Fire dampers shall be automatic operating type and shall have a dynamic rating suitable for the maximum air velocity and pressure differential to which it will be subjected. Fire dampers shall be approved for the specific application, and shall be installed according to their listing. Fire dampers shall be equipped with a steel sleeve or adequately sized frame installed in such a manner that disruption of the attached ductwork, if any, will not impair the operation of the damper. Sleeves or frames shall be equipped with perimeter mounting angles attached on both sides of the wall or floor opening. Ductwork in fire-rated floor-ceiling or roof-ceiling assembly systems with air ducts that pierce the ceiling of the assemblies shall be constructed in conformance with UL-05. Fire dampers shall be curtain type with damper blades out of the air stream. Dampers shall not reduce the duct or the air transfer opening cross-sectional area. Dampers shall be installed so that the centerline of the damper depth or thickness is located in the centerline of the wall, partition or floor slab depth or thickness. Unless otherwise indicated, the installation details given in SMACNA-05 and in manufacturer's instructions for fire dampers shall be followed.

2.8.2.3 Splitters and Manual Balancing Dampers: Splitters and manual balancing dampers shall be furnished with accessible operating mechanisms. Where operators occur in finished portions of the building, operators shall be chromium plated with all exposed edges rounded. Splitters shall be operated by quadrant operators or 3/16 inch rod brought through the side of the duct with locking setscrew and bushing. Two rods are required on splitters over 8 inches. Manual volume control dampers shall be operated by locking-type quadrant operators. Dampers and splitters shall be 2 gauges heavier than the duct in which installed. Unless otherwise indicated, multileaf dampers shall be opposed blade type with maximum blade width of 12 inches. Access doors or panels shall be provided for all concealed damper operators and locking setscrews. Unless otherwise indicated, the locking-type quadrant operators for dampers, when installed on ducts to be thermally insulated, shall be provided with stand-off mounting brackets, bases, or adapters to provide clearance between the duct surface and the operator not less than the thickness of the insulation. Stand-off mounting items shall be integral with the operator or standard accessory of the damper manufacturer. Volume dampers shall be provided where indicated.

2.8.2.4 Air Deflectors and Branch Connections: Air deflectors shall be provided at duct mounted supply outlets, at takeoff or extension collars to supply outlets, at duct branch takeoff connections, and at 90 degree elbows, as well as at locations as indicated on the drawings or otherwise specified. Conical branch connections or 45 degree entry connections may be used in lieu of deflectors or extractors for branch connections. All air deflectors, except those installed in 90 degree elbows, shall be provided with an approved means of adjustment. Adjustment shall be made from easily accessible means inside the duct or from an adjustment with sturdy lock on the face of the duct. When installed on ducts to be thermally insulated, external adjustments shall be provided with stand-off mounting brackets, integral with the adjustment device, to provide clearance between the duct surface and the adjustment device not less than the thickness of the thermal insulation. Air deflectors shall be factory-fabricated units consisting of curved turning vanes or louver blades designed to provide uniform air distribution and change of direction with minimum turbulence or pressure loss. Air deflectors shall be factory or field assembled. Blade air deflectors, also called blade air extractors, shall be approved factory fabricated units consisting of equalizing grid and adjustable blade and lock. Adjustment shall be easily made from the face of the diffuser or by position adjustment and lock external to the duct. Stand-off brackets shall be provided on insulated ducts and are described herein. Fixed air deflectors, also called turning vanes, shall be provided in 90 degree elbows.

2.8.3 Duct Sleeves, Framed Prepared Openings, Closure Collars

2.8.3.1 Duct Sleeves: Duct sleeves shall be provided for round ducts 15 inches in diameter or less passing through floors, walls, ceilings, or roof, and installed during construction of the floor, wall, ceiling, or roof. Round ducts larger than 15 inches in diameter and square, rectangular, and oval ducts passing through floors, walls, ceilings, or roof shall be installed through framed prepared openings. The Contractor shall be responsible for the proper size and location of sleeves and prepared openings. Sleeves and framed openings are also required where grilles, registers, and diffusers are installed at the openings. Framed prepared openings shall be fabricated from 20 gauge galvanized steel, unless otherwise indicated. Where sleeves are installed in bearing walls or partitions, black steel pipe, ASTM A 53, Schedule 20 shall be used. Sleeve shall provide 1 inch clearance between the duct and the sleeve or 1 inch clearance between the insulation and the sleeve for insulated ducts.

2.8.3.2 Framed Prepared Openings: Openings shall have 1 inch clearance between the duct and the opening or 1 inch clearance between the insulation and the opening for insulated ducts.

2.8.3.3 Closure Collars: Collars shall be fabricated of galvanized sheet metal not less than 100 mm 4 inches wide, unless otherwise indicated, and shall be installed on exposed ducts on each side of walls or floors where sleeves or prepared openings are provided. Collars shall be installed tight against surfaces. Collars shall fit snugly around the duct or insulation. Sharp edges of the collar around insulated duct shall be ground smooth to preclude tearing or puncturing the insulation covering or vapor barrier. Collars for round ducts 15 inches in diameter or less shall be fabricated from 20 gauge galvanized steel. Collars for round ducts larger than 15 inches and square, and rectangular ducts shall be fabricated from 18 gauge galvanized steel. Collars shall be installed with fasteners on maximum 6 inch centers, except that not less than 4 fasteners shall be used.

2.8.4 Plenums and Casings for Field-Fabricated Units

2.8.4.1 Plenum and Casings: Plenums and casings shall be fabricated and erected as shown in SMACNA-06, as applicable. Unless otherwise indicated, system casing shall be constructed of not less than 16 gauge galvanized sheet steel. Cooling coil drain pans with 1 inch threaded outlet shall be provided to collect condensation from the cooling coils. Drain pans shall be fabricated of not lighter than 16 gauge steel, galvanized after fabrication or of 18 gauge corrosion-resisting sheet steel conforming to ASTM A 167, Type 304, welded and stiffened. Drain pans exposed to the atmosphere shall be thermally insulated to prevent condensation. Insulation shall be coated with a flame resistant waterproofing material. Separate drain pans shall be provided for each vertical coil section, and a separate drain line shall be provided for each pan. Pans shall be generously sized to ensure capture of entrained moisture on the downstream-air side of the coil. Openings in the casing, such as for piping connections, shall be sealed and covered to prevent air leakage. Water seal for the drain shall provide at least 2 inch water gauge greater than the maximum negative pressure in the coil space.

2.8.4.2 Casing: Casings shall be terminated at the curb line and anchored by the use of galvanized angle iron sealed and bolted to the curb, as indicated in SMACNA-06.

2.8.4.3 Access Doors: Access doors shall be provided in each section of the casing. Door frames shall be welded in place, and each door shall be neoprene gasketed, hinged with minimum of two brass hinges, and fastened with a minimum of two brass tension fasteners operable from inside and outside of the casing. Where possible, doors shall be 36 by 18 inches located 18 inches above the floor. Where the space available will not accommodate doors of this size, doors as large as the space will accommodate shall be provided. Doors shall swing so that fan suction or pressure holds door in closed position, and shall be airtight. A push-button station to stop the supply fan shall be located inside the casing where indicated.

2.8.4.4 Factory-Fabricated Insulated Sheet Metal Panels: Factory-fabricated components may be used for field-assembled units, provided all requirements specified for field-fabricated plenums and casings are met. Panels shall be of modular design, pretested for structural strength, thermal control, condensation

control, and acoustical control. Panel joints shall be sealed and insulated access doors shall be provided and gasketed to prevent air leakage. Panel construction shall be not less than 20 gauge galvanized sheet steel and shall be assembled with fasteners treated against corrosion. Standard length panels shall deflect not more than 1/2 inch under operation. Details of construction, including joint sealing, not specifically covered shall be as indicated in SMACNA-06. The plenums and casings shall be constructed to withstand the specified internal pressure of the air systems.

2.8.4.5 Duct Liner: Unless otherwise specified, duct liner shall conform to ASTM C 1071, Type I or II.

2.8.5 Sound Attenuation Equipment

a. Systems With Total Pressure Above 4 Inches Water Gauge:: Sound attenuators shall be provided on the discharge duct of each fan operating at a total pressure above 4 inch water gauge, and, when indicated, at the intake of each fan system. Sound attenuators shall be provided elsewhere as indicated. The sound attenuators shall be factory fabricated and shall be tested by an independent laboratory for sound and performance characteristics. Net sound reduction shall be as indicated. Maximum permissible pressure drop shall not exceed .0.63 inch water gauge. Traps shall be constructed to be airtight when operating under an internal static pressure of 10 inch water gauge. Air-side surface shall be capable of withstanding air velocity of 10,000 fpm. The Contractor shall certify that the sound reduction values specified will be obtained after the equipment is installed in the system and coordinated with the sound information of the system fan to be provided. Sound absorbing material shall conform to ASTM C 1071, Type I or II. Sound absorbing material shall meet the fire hazard rating requirements for insulation specified in Section 15250 THERMAL INSULATION FOR MECHANICAL SYSTEMS. A duct transition section shall be provided for connection to ductwork. Factory fabricated double-walled internally insulated spiral lock seam and round duct and fittings designed for high pressure air system may be provided in lieu of factory fabricated sound attenuators, and shall comply with requirements specified for factory fabricated sound attenuators. The double-walled duct and fittings shall be constructed of an outer metal pressure shell of zinc-coated steel sheet, 1 inch thick acoustical blanket insulation, and an internal perforated zinc-coated metal liner. Sufficient length of run shall be provided to obtain the noise reduction coefficient specified. The Contractor shall certify that the sound reduction value specified will be obtained within the length of duct run provided. The outer sheet metal of the double-walled duct shall have welded, or spiral lock, seams to prevent water vapor penetration. The outer sheet of the duct and fittings shall conform to the metal thickness of high pressure spiral and round ducts and fittings shown in SMACNA-06. The acoustical insulation shall have a thermal conductivity "k" of not more than 0.27 Btu/inch/square foot/hour/degree F at 75 degrees F mean temperature. The internal perforated zinc-coated metal liner shall be not less than 24 gauge with perforations not larger than 1/4 inch in diameter providing a net open area not less than 10 percent of the surface.

a. System With Total Pressure of 4 Inch Water Gauge and Lower: Sound attenuators shall be provided only where indicated, or in lieu of lined ducts. Factory fabricated sound attenuators shall be constructed of galvanized steel sheets. Outer casing shall be not less than 22 gauge. Acoustical fill shall be fibrous glass. Net sound reduction shall be as indicated. Values shall be obtained on a test unit not less than 24 inches by 24 inches outside dimensions made by a certified nationally recognized independent acoustical laboratory. Air flow capacity shall be as indicated or required. Pressure drop through the attenuator shall not exceed the value indicated, or shall not be in excess of 15 percent of the total external static pressure of the air handling system, whichever is less. Sound attenuators shall be acoustically tested with metal duct inlet and outlet sections while under the rated air flow conditions. Noise reduction data shall include the effects of flanking paths and vibration transmission. Sound attenuators shall be constructed to be airtight when operating at the internal static pressure indicated or specified for the duct system, but in no case less than 2 inch water gauge.

a. Acoustical Duct Liner: Acoustical duct lining shall be fibrous glass designed exclusively for lining ductwork and shall conform to the requirements of ASTM C 1071, Type I and II. Liner composition may be uniform density, graduated density, or dual density, as standard with the manufacturer. Lining shall be coated, not less than 1 inch thick. Where acoustical duct liner is used, liner or combination of liner and insulation applied to the exterior of the ductwork shall be the thermal equivalent of the insulation specified in Section 15250 THERMAL INSULATION FOR MECHANICAL SYSTEMS. Duct sizes shown shall be increased to compensate for the thickness of the lining used. In lieu of sheet metal duct with field-applied acoustical lining, acoustically equivalent lengths of fibrous glass duct or factory fabricated double-walled internally insulated duct with perforated liner may be provided. Net insertion loss value, static pressure drop, and air flow velocity capacity data shall be certified by a nationally recognized independent acoustical laboratory.

2.8.6 Diffusers, Registers, and Grilles: Units shall be factory-fabricated of steel, corrosion-resistant steel, or aluminum and shall distribute the specified quantity of air evenly over space intended without causing noticeable drafts, air movement faster than 50 fpm in occupied zone, or dead spots anywhere in the conditioned area. Outlets for diffusion, spread, throw, and noise level shall be as required for specified performance. Performance shall be certified according to ADC 1062:GRD. Inlets and outlets shall be sound rated and certified according to ADC 1062:GRD. Sound power level shall be as indicated. Diffusers and registers shall be provided with volume damper with accessible operator, unless otherwise indicated; or if standard with the manufacturer, an automatically controlled device will be acceptable. Volume dampers shall be opposed blade type for all diffusers and registers, except linear slot diffusers. Linear slot diffusers shall be provided with round or elliptical balancing dampers. Where the inlet and outlet openings are located less than 7 feet above the floor, they shall be protected by a grille or screen according to NFPA 90A.

2.8.6.1 Diffusers: Diffuser types shall be as indicated. Ceiling mounted units shall be furnished with anti-smudge devices, unless the diffuser unit minimizes ceiling smudging through design features. Diffusers shall be provided with air deflectors of the type indicated. Air handling troffers or combination light and ceiling diffusers shall conform to the requirements of UL-03 for the interchangeable use as cooled or heated air supply diffusers or return air units. Ceiling mounted units shall be installed with rims tight against ceiling. Sponge rubber gaskets shall be provided between ceiling and surface mounted diffusers for air leakage control. Suitable trim shall be provided for flush mounted diffusers. Duct collar connecting the duct to diffuser shall be airtight and shall not interfere with volume controller. Return or exhaust units shall be similar to supply diffusers.

2.8.6.2 Registers and Grilles: Units shall be four-way directional-control type, except that return and exhaust registers may be fixed horizontal or vertical louver type similar in appearance to the supply register face. Registers shall be provided with sponge-rubber gasket between flanges and wall or ceiling. Four-way directional control may be achieved by a grille face which can be rotated in 4 positions or by adjustment of horizontal and vertical vanes. Grilles shall be as specified for registers, without volume control damper.

2.8.7 Louvers: Louvers for installation in exterior walls which are associated with the air supply and distribution system shall be as specified in Section 07600 SHEET METALWORK, GENERAL.

2.8.8 Bird Screens and Frames: Bird screens shall conform to ASTM E 437, Type I, Class 1, 2 by 2 mesh, 0.063 inch diameter aluminum wire or 0.031 inch diameter stainless steel wire. Frames shall be removable type or stainless steel or extruded aluminum.

2.9 AIR SYSTEMS EQUIPMENT

2.9.1 Fans: Fans shall be tested and rated according to AMCA 210. Fans may be connected to the motors either directly or indirectly with V-belt drive. V-belt drives shall be designed for not less than 150 percent of the connected driving capacity. Motor sheaves shall be variable pitch for 15 hp and below and fixed pitch as defined by ARI Guideline D. Variable pitch sheaves shall be selected to drive the fan at a speed which will produce the specified capacity when set at the approximate midpoint of the sheave adjustment. When fixed pitch sheaves are furnished, a replaceable sheave shall be provided when needed to achieve system air balance. Motors for V-belt drives shall be provided with adjustable rails or bases. Removable metal guards shall be provided for all exposed V-belt drives, and speed-test openings shall be provided at the center of all rotating shafts. Fans shall be provided with personnel screens or guards on both suction and supply ends, except that the screens need not be provided, unless otherwise indicated, where ducts are connected to the fan. Fan and motor assemblies shall be provided with vibration-isolation supports or mountings as indicated. Vibration-isolation units shall be standard products with published loading ratings. Each fan shall be selected to produce the capacity required at the fan static pressure indicated. Sound power level shall be as indicated. The sound power level values shall be obtained according to AMCA 300. Standard AMCA arrangement, rotation, and discharge shall be as indicated.

2.9.1.1 Centrifugal Fans: Centrifugal fans shall be fully enclosed, single-width single-inlet, or double-width double-inlet, AMCA Pressure Class I, II, or III as required or indicated for the design system pressure. Impeller wheels shall be rigidly constructed, accurately balanced both statically and dynamically. Fan blades may be forward curved, backward-inclined or airfoil design in wheel sizes up to 30 inches. Fan blades for wheels over 30 inches in diameter shall be backward-inclined or airfoil design. Fan wheels over 36 inches in diameter shall have overhung pulleys and a bearing on each side of the wheel. Fan wheels 36 inches or less in diameter may have one or more extra long bearings between the fan wheel and the drive. Bearings shall be sleeve type, self-aligning and self-oiling with oil reservoirs, or precision self-aligning roller or ball-type with accessible grease fittings or permanently lubricated type. Grease fittings shall be connected to tubing and serviceable from a single accessible point. Bearing life shall be L50 rated at not less than 200,000 hours as defined by ABEMA 9 and ABEMA 11. Fan shafts shall be steel, accurately finished, and shall be provided with key seats and keys for impeller hubs and fan pulleys. Each fan outlet shall be of ample proportions and shall be designed for the attachment of angles and bolts for attaching flexible connections. Manually operated inlet vanes shall be provided on suction inlets. Manually operated outlet dampers shall be provided. Motors, unless otherwise indicated, shall not exceed 1800 rpm and shall have totally enclosed enclosures. Motor starters shall be manual across-the-line type with general-purpose enclosure.

2.9.1.2 In-Line Centrifugal Fans: In-line fans shall have centrifugal backward inclined blades, stationary discharge conversion vanes, internal and external belt guards, and adjustable motor mounts. Fans shall be mounted in a welded tubular casing. Air shall enter and leave the fan axially. Inlets shall be streamlined with conversion vanes to eliminate turbulence and provide smooth discharge air flow. Fan bearings and drive shafts shall be enclosed and isolated from the air stream. Fan bearings shall be sealed against dust and dirt and shall be permanently lubricated, and shall be precision self aligning ball or roller type. Bearing life shall be L50 rated at not less than 200,000 hours as defined by ABEMA 9 and ABEMA 11. Motors shall have totally enclosed enclosure. Motor starters shall be manual across-the-line with general-purpose enclosures.

2.9.2 Coils

Coils shall be fin-and-tube type constructed of seamless copper tubes and aluminum or copper fins mechanically bonded or soldered to the tubes. Copper tube wall thickness shall be a minimum of .0.016 inches. .Aluminum fins shall be 0.0075 inch minimum thickness. Copper fins shall be 0.0045 inch minimum thickness. Casing and tube support sheets shall be not lighter than 16 gauge galvanized steel, formed to provide structural strength. When required, multiple tube supports shall be provided to prevent tube sag. Each coil shall be tested at the factory under water at not less than 400 psi air pressure and shall be suitable for 200 psi working pressure. Coils shall be mounted for counterflow service. Coils shall be rated and certified according to ARI 410.

2.9.2.1 Water Coils: Water coils shall be installed with a pitch of not less than 10 mm per meter 1/8 inch per foot of the tube length toward the drain end. Headers shall be constructed of cast iron, welded steel or copper. Each coil shall be provided with a plugged vent and drain connection extending through the unit casing.

2.9.3 Air Filters: Air filters shall be listed according to requirements of UL 900, except high efficiency particulate air filters of 99.97 percent efficiency by the DOP Test method shall be as listed under the Label Service and shall meet the requirements of UL 586.

2.9.3.1 Extended Surface Pleated Panel Filters: Filters shall be 2 inch depth, sectional, disposable type of the size indicated and shall have an average efficiency of 25 to 30 percent when tested according to ASHRAE 52.1. Initial resistance at 500 feet per minute shall not exceed 9 mm 0.36 inches water gauge. Filters shall be UL Class 2. Media shall be nonwoven cotton and synthetic fiber mat. A wire support grid bonded to the media shall be attached to a moisture resistant fiberboard frame. All four edges of the filter media shall be bonded to the inside of the frame to prevent air bypass and increase rigidity.

2.9.3.2 Replaceable Media Filters: Replaceable media filters shall be the dry-media type, of the size required to suit the application. Filtering media shall be not less than 2 inches thick fibrous glass media pad supported by a structural wire grid or woven wire mesh. Pad shall be enclosed in a holding frame of not less than 16 gauge galvanized steel, and equipped with quick-opening mechanism for changing filter media. The air flow capacity of the filter shall be based on net filter face velocity not exceeding 300 feet per minute, with initial resistance of 0.13 inches water gauge. Average efficiency shall be not less than 35 percent when tested according to ASHRAE 52.1.

2.9.3.3 Holding Frames: Frames shall be fabricated from not lighter than 16 gauge sheet steel with rust-inhibitor coating. Each holding frame shall be equipped with suitable filter holding devices. Holding frame seats shall be gasketed. All joints shall be airtight.

2.9.3.4 Filter Gauges: Filter gauges shall be dial type, diaphragm actuated draft and shall be provided for all filter stations, including those filters which are furnished as integral parts of factory fabricated air handling units. Gauges shall be at least 3-7/8 inches in diameter, shall have white dials with black figures, and shall be graduated in 0.01 inch, and shall have a minimum range of 1 inch beyond the specified final resistance for the filter bank on which each gauge is applied. Each gauge shall incorporate a screw operated zero adjustment and shall be furnished complete with two static pressure tips with integral compression fittings, two molded plastic vent valves, two 5 foot minimum lengths 1/4 inch diameter aluminum or vinyl tubing, and all hardware and accessories for gauge mounting.

2.10 AIR HANDLING UNITS

2.10.1 Factory-Fabricated Air Handling Units

Units shall be single-zone draw-through type as indicated. Units shall include fans, coils, airtight insulated casing, adjustable V-belt drives, belt guards for externally mounted motors, access sections, combination sectional filter-mixing box, vibration-isolators, and appurtenances required for specified operation. Vibration isolators shall be as indicated. Each air handling unit shall have physical dimensions suitable to fit space allotted to the unit and shall have the capacity indicated. Air handling unit shall have published ratings based on tests performed according to ARI 430.

2.10.1.1 Casings

Casing sections shall be single wall type, of a minimum 18 gauge galvanized steel, or 18 gauge steel outer casing protected with a corrosion resistant paint finish according to paragraph FACTORY PAINTING. Casing shall be designed and constructed with an integral structural steel frame such that exterior panels

are non-load bearing. Exterior panels shall be individually removable. Removal shall not affect the structural integrity of the unit. Casings shall be provided with inspection doors, access sections, and access doors as indicated. Inspection and access doors shall be insulated, fully gasketed, double-wall type, of a minimum 18 gauge outer and 20 gauge inner panels. Doors shall be rigid and provided with heavy duty hinges and latches. Inspection doors shall be a minimum 12 inches wide by 12 inches high. Access doors shall be minimum 24 inches wide and shall be the full height of the unit casing or a minimum of 6 ft., whichever is less. Access Sections shall be according to paragraph AIR HANDLING UNITS. Drain pan shall be double-bottom type constructed of 16 gauge stainless steel, pitched to the drain connection. Drain pans shall be constructed water tight, treated to prevent corrosion, and designed for positive condensate drainage. Intermediate drain pans or condensate collection channels and downspouts shall be provided, as required to carry condensate to the unit drain pan out of the air stream and without moisture carryover. Each casing section handling conditioned air shall be insulated with not less than 1 inch thick, 1-1/2 pound density coated fibrous glass material having a thermal conductivity not greater than 0.23 Btu/hr-sf-F. Factory applied fibrous glass insulation shall conform to ASTM C 1071, except that the minimum thickness and density requirements do not apply, and shall meet the requirements of NFPA 90A. Foam-type insulation is not acceptable. Foil-faced insulation shall not be an acceptable substitute for use on double-wall access doors and inspections doors. Duct liner material, coating, and adhesive shall conform to fire-hazard requirements specified in Section 15250 THERMAL INSULATION FOR MECHANICAL SYSTEMS. Exposed insulation edges and joints where insulation panels are butted together shall be protected with a metal nosing strip or shall be coated to conform to meet erosion resistance requirements of ASTM C 107. A latched and hinged inspection door, shall be provided in the fan and coil sections.

2.10.1.2 Heating Coils: Coils shall be provided as specified in paragraph AIR SYSTEMS EQUIPMENT, for types indicated.

2.10.1.3 Air Filters: Air filters shall be as specified in paragraph AIR SYSTEMS EQUIPMENT for types and thickness indicated.

2.10.1.4 Fans: Fans shall be double-inlet, centrifugal type with each fan in a separate scroll. Fans and shafts shall be dynamically balanced prior to installation into air handling unit, then the entire fan assembly shall be statically and dynamically balanced at the factory after it has been installed in the air handling unit. Fans shall be mounted on steel shafts accurately ground and finished. Fan bearings shall be sealed against dust and dirt and shall be precision self-aligning ball or roller type. Bearing life shall be L50 rated at not less than 200,000 hours as defined by ABEMA 9 and ABEMA 11. Bearings shall be permanently lubricated or lubricated type with lubrication fittings readily accessible at the drive side of the unit. Bearings shall be supported by structural shapes, or die formed sheet structural members, or support plates securely attached to the unit casing. Bearings may not be fastened directly to the unit sheet metal casing. Fans and scrolls shall be furnished with coating indicated. Fans shall be driven by a unit-mounted or a floor-mounted motor connected to fans by V-belt drive complete with belt guard for externally mounted motors. Belt guards shall be the three sided enclosed type with solid or expanded metal face. Belt drives shall be designed for not less than a 1.3 service factor based on motor nameplate rating. Motor sheaves shall be variable pitch for 25 hp and below and fixed pitch above 25 hp as defined by ARI Guideline D. Where fixed sheaves are required, variable pitch sheaves may be used during air balance, but shall be replaced with an appropriate fixed sheave after air balance is completed. Variable pitch sheaves shall be selected to drive the fan at a speed that will produce the specified capacity when set at the approximate midpoint of the sheave adjustment. Motors for V-belt drives shall be provided with adjustable bases. Fan motors shall have totally enclosed enclosures. Motor starters shall be manual across-the-line type with general-purpose enclosure. Unit fan or fans shall be selected to produce the required capacity at the fan static pressure. Sound power level shall be as indicated. The sound power level values shall be obtained according to AMCA 300 or ASHRAE 68.

2.10.1.5 Access Sections and Filter/Mixing Boxes: Access sections shall be provided where indicated and shall be furnished with access doors as shown. Access sections and filter/mixing boxes shall be

constructed in a manner identical to the remainder of the unit casing and shall be equipped with access doors. Mixing boxes shall be designed to minimize air stratification and to promote thorough mixing of the air streams.

2.10.1.6 Dampers: Dampers shall be as specified in paragraph CONTROLS.

2.11 FACTORY PAINTING: Units which are not of galvanized construction according to ASTM A 123 or ASTM A 525 shall be factory painted with a corrosion resisting paint finish. Internal and external ferrous metal surfaces shall be cleaned, phosphatised and coated with a paint finish which has been tested according to ASTM B 117, ASTM D 1654, and ASTM D 3359. Evidence of satisfactory paint performance for a minimum of 125 hours for units to be installed indoors and 500 hours for units to be installed outdoors shall be submitted. Rating of failure at the scribe mark shall be not less than 6, average creepage not greater than 1/8 inch. Rating of the inscribed area shall not be less than 10, no failure. On units constructed of galvanized steel which have been welded, exterior surfaces of welds or welds that have burned through from the interior shall receive a final shop docket of zinc-rich protective paint according to ASTM D 520 Type I.

PART 3 EXECUTION

3.1 INSTALLATION: Work shall be installed as shown and according to the manufacturer's diagrams and recommendations.

3.1.1 Piping: Pipe and fitting installation shall conform to the requirements of ASME B31.1. Pipe shall be cut accurately to measurements established at the jobsite, and worked into place without springing or forcing, completely clearing all windows, doors, and other openings. Cutting or other weakening of the building structure to facilitate piping installation will not be permitted without written approval. Pipe or tubing shall be cut square, shall have burrs removed by reaming, and shall permit free expansion and contraction without causing damage to the building structure, pipe, joints, or hangers. Changes in direction shall be made with fittings, except that bending of pipe 4 inches and smaller will be permitted, provided a pipe bender is used and wide sweep bends are formed. The centerline radius of bends shall not be less than 6 diameters of the pipe. Bent pipe showing kinks, wrinkles, flattening, or other malformations will not be accepted. Horizontal supply mains shall pitch down in the direction of flow as indicated. The grade shall be not less than 1 inch in 40 feet. Reducing fittings shall be used for changes in pipe sizes. Open ends of pipelines and equipment shall be capped or plugged during installation to keep dirt or other foreign materials out of the system. Pipe not otherwise specified shall be uncoated. Connections to appliances shall be made with malleable iron unions for steel pipe 2-1/2 inch or less in diameter, and with flanges for pipe)3 inches and larger. Connections between ferrous and copper piping shall be electrically isolated from each other with dielectric unions or flanges. All piping located in air plenums shall conform to NFPA 90A requirements. Pipe and fittings installed in inaccessible conduits or trenches under concrete floor slabs shall be welded.

3.1.1.1 Joints

a. Threaded Joints: Threaded joints shall be made with tapered threads and made tight with a stiff mixture of graphite and oil or polytetrafluoroethylene tape or equivalent thread joint compound or material, applied to the male threads only.

b. Soldered Joints: Joints in copper tubing shall be cut square with ends reamed, and all filings and dust wiped from interior of pipe. Joints shall be soldered with 95/5 solder or brazed with silver solder applied and drawn through the full fitting length. Care shall be taken to prevent annealing of tube or fittings when making connections. Joints 2-1/2 inch and larger shall be made with heat uniformly around the entire circumference of the joint with a multi-flame torch. Connections in floor slabs shall be brazed. Excess solder shall be wiped from joint before solder hardens.

3.1.1.2 Grooved Mechanical Joints: Grooves shall be prepared according to the coupling manufacturer's instructions. Pipe and groove dimensions shall comply with the tolerances specified by the coupling manufacturer. The diameter of grooves made in the field shall be measured using a "go/no-go" gauge, vernier or dial caliper, or narrow-land micrometer. Groove width and dimension of groove from end of pipe shall be measured and recorded for each change in grooving tool setup to verify compliance with coupling manufacturer's tolerances. Grooved joints shall not be used in concealed locations.

3.1.1.3 Flanges and Unions: Except where copper tubing is used, union or flanged joints shall be provided in each line immediately preceding the connection to each piece of equipment or material requiring maintenance such as coils, pumps, control valves, and other similar items.

3.1.2 Supports

3.1.2.1 General: Hangers used to support piping 2 inches and larger shall be fabricated to permit adequate adjustment after erection while still supporting the load. Pipe guides and anchors shall be installed to keep pipes in accurate alignment, to direct the expansion movement, and to prevent buckling, swaying, and undue strain. Piping subjected to vertical movement when operating temperatures exceed ambient temperatures shall be supported by variable spring hangers and supports or by constant support hangers.

3.1.2.2 Seismic Requirements (Pipe Supports and Structural Bracing): Piping and attached valves shall be supported and braced to resist zone 4 seismic loads as specified under Section 13080 SEISMIC PROTECTION FOR MECHANICAL, ELECTRICAL EQUIPMENT. Structural steel required for reinforcement to properly support piping, headers, and equipment but not shown shall be provided under this section. Material used for support shall be as specified under Section 05210 STEEL JOISTS.

3.1.2.3 Pipe Hangers, Inserts and Supports: Pipe hangers, inserts, and supports shall conform to MSS SP-58 and MSS SP-69, except as modified herein. Types 5, 12, and 26 shall not be used.

a. Hangers: Type 3 shall not be used on insulated piping.

b. Inserts: Type 18 inserts shall be secured to concrete forms before concrete is placed. Continuous inserts which allow more adjustment may be used if they otherwise meet the requirements for Type 18 inserts.

c. C-Clamps: Type 19 and 23 C-clamps shall be torqued per MSS SP-69 and have both locknuts and retaining devices, furnished by the manufacturer. Field-fabricated C-clamp bodies or retaining devices are not acceptable.

d. Angle Attachments: Type 20 attachments used on angles and channels shall be furnished with an added malleable-iron heel plate or adapter.

e. Hangers: Type 24 may be used only on trapeze hanger systems or on fabricated frames.

f. Type 39 saddles shall be used on all insulated pipe 4 inches and larger when the temperature of the medium is above 60 degrees F. Type 39 saddles shall be welded to the pipe.

g. Type 40 shields shall:

(1) be used on all insulated pipes less than 4 inches.

(2) be used on all insulated pipes 4 inches and larger when the temperature of the medium is 60 degrees or less.

(3) have a high density insert for pipe 2 inches and larger, and for smaller pipe when the insulation shows signs of being visibly compressed, or when the insulation or jacket shows visible signs of distortion at or near the type 40 shield. High density inserts shall have a density of 9 pcf or greater.

h. Horizontal Pipe Supports: Horizontal pipe supports shall be spaced as specified in MSS SP-69 and a support shall be installed not over 1 foot from the pipe fitting joint at each change in direction of the piping. Pipe supports shall be spaced not over 5 feet apart at valves. Pipe hanger loads suspended from steel joist with hanger loads between panel points in excess of 50 pounds shall have the excess hanger loads suspended from panel points.

i. Vertical Pipe Supports: Vertical pipe shall be supported at each floor, except at slab-on-grade, and at intervals of not more than 15 feet, not more than 8 feet from end of risers, and at vent terminations.

j. Pipe Guides: Type 35 guides using steel reinforced polytetrafluoroethylene (PTFE) or graphite slides shall be provided where required to allow longitudinal pipe movement. Lateral restraints shall be provided as required. Slide materials shall be suitable for the system operating temperatures, atmospheric conditions, and bearing loads encountered.

k. Steel Slides: Where steel slides do not require provisions for restraint of lateral movement, an alternate guide method may be used. On piping 4 inches and larger with medium 60 degrees F or greater, a Type 39 saddle may be welded to the pipe and freely rest on a steel plate. On piping under 4 inches, a Type 40 protection shield may be attached to the pipe or insulation and freely rest on a steel slide plate.

l. High Temperature Guides with Cradles: Where there are high system temperatures and welding to piping is not desirable, the Type 35 guide shall include a pipe cradle, welded to the guide structure and strapped securely to the pipe. The pipe shall be separated from the slide material by at least 100 mm, 4 inches, or by an amount adequate for the insulation, whichever is greater.

m. Insulated Pipe: Insulation on horizontal pipe shall be continuous through hangers for hot and cold piping. Other requirements on insulated pipe are specified in Section 15250 THERMAL INSULATION FOR MECHANICAL SYSTEMS.

3.1.3 Anchors: Anchors shall be provided wherever necessary or indicated to localize expansion or to prevent undue strain on piping. Anchors shall consist of heavy steel collars with lugs and bolts for clamping and attaching anchor braces, unless otherwise indicated. Anchor braces shall be installed in the most effective manner to secure the desired results using turnbuckles where required. Supports, anchors, or stays shall not be attached where they will injure the structure or adjacent construction during installation or by the weight of expansion of the pipeline.

3.1.4 Pipe Sleeves: Sleeves shall not be installed in structural members except where indicated or approved. Rectangular and square openings shall be as detailed. Each sleeve shall extend through its respective wall, floor, or roof, and shall be cut flush with each surface. Pipes passing through concrete or masonry wall or concrete floors or roofs shall be provided with pipe sleeves fitted into place at the time of construction. Unless otherwise indicated, sleeves shall provide a minimum of 6 mm 1/4 inch all-around clearance between bare pipe and sleeves or between jacket over insulation and sleeves. Sleeves in bearing walls, waterproofing membrane floors, and wet areas shall be steel pipe or cast iron pipe. Sleeves in non-bearing walls, floors, or ceilings may be steel pipe, cast iron pipe, galvanized sheet metal with lock-type longitudinal seam and of the metal thickness indicated, or moisture resistant fiber or plastic. Except in pipe chases or interior walls, the annular space between pipe and sleeve or between jacket over insulation and sleeve, in non-fire rated walls, shall be sealed as indicated and specified in Section 07920 JOINT

SEALING. Pipes passing through wall waterproofing membrane shall be sleeved as specified above, and a waterproofing clamping flange shall be installed as indicated.

3.1.4.1 Fire Seal: Where pipes pass through firewalls, fire partitions, or floors, a fire seal shall be provided as specified in Section 07270 FIRESTOPPING.

3.1.4.2 Escutcheons: Escutcheons shall be provided at finished surfaces where exposed piping, bare or insulated, passes through floors, walls, or ceilings except in boiler, utility, or equipment rooms. Where sleeves project slightly from floors, special deep-type escutcheons shall be used. Escutcheons shall be secured to pipe or pipe covering.

3.1.5 Condensate Drain Lines: Water seals shall be provided in the condensate drain from all units. The depth of each seal shall be 2 inches plus the number of inches, measured in water gauge, of the total static pressure rating of the unit to which the drain is connected. Water seals shall be constructed of 2 tees and an appropriate U-bend with the open end of each tee plugged. Pipe cap or plug cleanouts shall be provided where indicated. Drains indicated to connect to the sanitary waste system shall be connected by an indirect waste fitting. Air conditioner drain lines shall be insulated as specified in Section 15250 THERMAL INSULATION FOR MECHANICAL SYSTEMS.

3.1.6 Pipe-Alignment Guides: Pipe-alignment guides shall be provided where indicated for expansion loops, offsets, and bends and as recommended by the manufacturer for expansion joints, not to 5 feet on each side of each expansion joint, and in lines 100 mm (4 inches) or smaller not more than 2 feet on each side of the joint.

3.1.7 Air Vents and Drains

3.1.7.1 Vents: Air vents shall be provided at high points, on water coils, and where indicated to ensure adequate venting of the piping system.

3.1.7.2 Drains: Drains shall be provided at low points and where indicated to ensure complete drainage of the piping. Drains shall be accessible, and shall consist of nipples and caps or plugged tees unless otherwise indicated.

3.1.8 Valves: Isolation gate or ball valves shall be installed on each side of each piece of equipment such as pumps, heaters, heating or cooling coils, and other similar items, at the midpoint of all looped mains, and at any other points indicated or required for draining, isolating, or sectionalizing purposes. Isolation valves may be omitted where balancing cocks are installed to provide both balancing and isolation functions. Each valve except check valves shall be identified. Valves in horizontal lines shall be installed with stems horizontal or above.

3.1.9 Equipment and Installation: Frames and supports shall be provided for tanks, compressors, pumps, valves, air handling units, fans, coils, dampers, and other similar items requiring supports. Air handling units shall be floor mounted or ceiling hung, as indicated. The method of anchoring and fastening shall be as detailed. Floor-mounted equipment, unless otherwise indicated, shall be set on not less than 6 inch concrete pads or curbs doweled in place. Concrete foundations for circulating pumps shall be heavy enough to minimize the intensity of the vibrations transmitted to the piping and the surrounding structure, as recommended in writing by the pump manufacturer. In lieu of a concrete pad foundation, a concrete pedestal block with isolators placed between the pedestal block and the floor may be provided. The concrete foundation or concrete pedestal block shall be of a mass not less than three times the weight of the components to be supported. Lines connected to the pump mounted on pedestal blocks shall be provided with flexible connectors. Foundation drawings, bolt-setting information, and foundation bolts shall be furnished prior to concrete foundation construction for all equipment indicated or required to have concrete foundations. Concrete for foundations shall be as specified in Section 03300 CONCRETE FOR BUILDING CONSTRUCTION.

3.1.10 Access Panels: Access panels shall be provided for concealed valves, vents, controls, dampers, and items requiring inspection or maintenance. Access panels shall be of sufficient size and located so that the concealed items may be serviced and maintained or completely removed and replaced. Access panels shall be as specified in Section 05500 MISCELLANEOUS METALS.

3.1.11 Flexible Connectors: Pre-insulated flexible connectors and flexible duct shall be attached to other components in accordance with the latest printed instructions of the manufacturer to ensure a vapor tight joint. Hangers, when required to suspend the connectors, shall be of the type recommended by the connector or duct manufacturer and shall be provided at the intervals recommended.

3.1.12 Sleeved and Framed Openings: Space between the sleeved or framed opening and the duct or the duct insulation shall be packed as specified in Section 07270 FIRESTOPPING for fire rated penetrations. For non-fire rated penetrations, the space shall be packed as specified in Section 07920 JOINT SEALING.

3.1.13 Metal Ductwork: Installation shall be according to SMACNA-06 unless otherwise indicated. Duct supports for sheet metal ductwork shall be according to SMACNA-06, unless otherwise specified. Friction beam clamps indicated in SMACNA-06 shall not be used. Risers on high velocity ducts shall be anchored in the center of the vertical run to allow ends of riser to move due to thermal expansion. Supports on the risers shall allow free vertical movement of the duct. Supports shall be attached only to structural framing members and concrete slabs. Supports shall not be anchored to metal decking unless a means is provided and approved for preventing the anchor from puncturing the metal decking. Where supports are required between structural framing members, suitable intermediate metal framing shall be provided. Where C-clamps are used, retainer clips shall be provided.

3.1.14 Acoustical Duct Lining: Lining shall be applied in cut-to-size pieces attached to the interior of the duct with nonflammable fire resistant adhesive conforming to ASTM C 916, Type I, NFPA 90A, UL 723, and ASTM E 84. Top and bottom pieces shall lap the side pieces and shall be secured with welded pins, adhered clips of metal, nylon, or high impact plastic, and speed washers or welding cup-head pins installed according to SMACNA-06. Welded pins, cup-head pins, or adhered clips shall not distort the duct, burn through, nor mar the finish or the surface of the duct. Pins and washers shall be flush with the surfaces of the duct liner and all breaks and punctures of the duct liner coating shall be sealed with the nonflammable, fire resistant adhesive. Exposed edges of the liner at the duct ends and at other joints where the lining will be subject to erosion shall be coated with a heavy brush coat of the nonflammable, fire resistant adhesive, to prevent delamination of glass fibers. Duct liner may be applied to flat sheet metal prior to forming duct through the sheet metal brake. Lining at the top and bottom surfaces of the duct shall be additionally secured by welded pins or adhered clips as specified for cut-to-size pieces. Other methods indicated in SMACNA-06 to obtain proper installation of duct liners in sheet metal ducts, including adhesives and fasteners, will be acceptable.

3.1.15 Dust Control: To prevent the accumulation of dust, debris and foreign material during construction, temporary dust control protection shall be provided. The distribution system (supply and return) shall be protected with temporary seal-offs at all inlets and outlets at the end of each day's work. Temporary protection shall remain in place until system is ready for startup.

3.1.16 Insulation: Thickness and application of insulation materials for ductwork, piping, and equipment shall be according to Section 15250 THERMAL INSULATION FOR MECHANICAL SYSTEMS. Outdoor air intake ducts and plenums shall be externally insulated up to the point where the outdoor air reaches the conditioning unit.

3.1.17 Duct Test Holes: Holes with closures or threaded holes with plugs shall be provided in ducts and plenums as indicated or where necessary for the use of pitot tube in balancing the air system. Extensions, complete with cap or plug, shall be provided where the ducts are insulated.

3.1.18 Power Transmission Components Adjustment: V-belts and sheaves shall be tested for proper alignment and tension prior to operation and after 72 hours of operation at final speed. Belts on drive side shall be uniformly loaded, not bouncing. Alignment of direct driven couplings shall be to within 50 percent of manufacturer's maximum allowable range of misalignment.

3.2 FIELD PAINTING AND PIPING IDENTIFICATION: Finish painting of items only primed at the factory or surfaces not specifically noted otherwise and identification for piping are specified in Section 09900 PAINTING, GENERAL.

3.3 PIPING HYDROSTATIC TEST: After cleaning, water piping shall be hydrostatically tested at a pressure equal to 150 percent of the total system operating pressure for period of time sufficient to inspect every joint in the system and in no case less than 2 hours. Leaks shall be repaired and piping retested until test is successful. No loss of pressure will be allowed. Leaks shall be repaired by re-welding or replacing pipe or fittings. Caulking of joints will not be permitted. Concealed and insulated piping shall be tested in place before covering or concealing.

3.4 CLEANING AND ADJUSTING: Pipes shall be cleaned free of scale and thoroughly flushed of foreign matter. A temporary bypass shall be provided for water coils to prevent flushing water from passing through coils. Strainers and valves shall be thoroughly cleaned. Prior to testing and balancing, air shall be removed from water systems by operating the air vents. Temporary measures, such as piping the overflow from vents to a collecting vessel shall be taken to avoid water damage during the venting process. Air vents shall be plugged or capped after the system has been vented. Inside of ducts, plenums, and casing shall be thoroughly cleaned of debris and blown free of small particles of rubbish and dust and then shall be vacuum cleaned before installing outlet faces. Equipment shall be wiped clean, with traces of oil, dust, dirt, or paint spots removed. Temporary filters shall be provided prior to startup of all fans that are operated during construction, and new filters shall be installed after all construction dirt has been removed from the building, and the ducts, plenums, casings, and other items specified have been vacuum cleaned. System shall be maintained in this clean condition until final acceptance. Bearings shall be properly lubricated with oil or grease as recommended by the manufacturer. Belts shall be tightened to proper tension. Control valves and other miscellaneous equipment requiring adjustment shall be adjusted to setting indicated or directed. Fans shall be adjusted to the speed indicated by the manufacturer to meet specified conditions.

3.5 TESTING, ADJUSTING, AND BALANCING: Testing, adjusting, and balancing shall be as specified in Section 15990 TESTING, ADJUSTING AND BALANCING OF HVAC SYSTEMS. Testing, adjusting, and balancing shall begin only when the air supply and distribution, including controls, has been completed, with the exception of performance tests.

3.6 PERFORMANCE TESTS: After testing, adjusting, and balancing has been completed as specified, each system shall be tested as a whole to see that all items perform as integral parts of the system and temperatures and conditions are evenly controlled throughout the building. Corrections and adjustments shall be made as necessary to produce the conditions indicated or specified. Capacity tests and general operating tests shall be conducted by an experienced engineer. Tests shall cover a period of not less than 2 days for each system and shall demonstrate that the entire system is functioning according to the specifications. Coincidental chart recordings shall be made at points indicated on the drawings for the duration of the time period and shall record the temperature at space thermostats or space sensors, the humidity at space humidistats or space sensors and the ambient temperature and humidity in a shaded and weather protected area.

3.7 FIELD TRAINING: The Contractor shall conduct a training course for operating and maintenance personnel as designated by the Contracting Officer. Training shall be provided for a period of 4 hours of normal working time and shall start after the system is functionally complete but prior to the performance tests. The field instruction shall cover all of the items contained in the approved Operating and Maintenance Instructions.

-- End of Section --

INDEX

SECTION 15950

HEATING, VENTILATING AND AIR CONDITIONING (HVAC) CONTROL SYSTEMS

Paragraph		Page
1.1	REFERENCES	15950-1
1.2	GENERAL REQUIREMENTS	15950-2
1.3	SUBMITTALS	15950-2
1.4	DELIVERY AND STORAGE	15950-5
2.1	GENERAL EQUIPMENT REQUIREMENTS	15950-5
2.2	MATERIALS	15950-5
2.3	ACTUATORS	15950-6
2.4	AUTOMATIC CONTROL VALVES	15950-7
2.5	DAMPERS	15950-7
2.6	DUCT SMOKE DETECTORS	15950-8
2.7	INSTRUMENTATION	15950-8
2.8	THERMOSTATS	15950-9
2.9	INDICATING DEVICES	15950-9
2.10	SINGLE-LOOP CONTROLLERS	15950-9
2.11	HVAC SYSTEM CONTROL PANELS	15950-10
2.12	MANUAL EMERGENCY FAN SHUTOFF SWITCHES	15950-11
3.1	GENERAL INSTALLATION CRITERIA	15950-11
3.2	CONTROL-SYSTEM INSTALLATION	15950-12
3.3	CONTROL SEQUENCES OF OPERATION	15950-12
3.4	COMMISSIONING PROCEDURES	15950-14
3.5	TESTING, COMMISSIONING, AND BALANCING	15950-19
3.6	TRAINING	15950-20

SECTION 15950

HEATING, VENTILATING AND AIR CONDITIONING (HVAC) CONTROL SYSTEMS

PART 1 GENERAL

1.1 REFERENCES: The publications listed below form a part of this specification to the extent referenced. The publications are referred to in the text by basic designation only.

AIR MOVEMENT AND CONTROL ASSOCIATION (AMCA)

AMCA 500	(1989) Test Methods for Louvers, Dampers, and Shutters

AMERICAN SOCIETY FOR TESTING AND MATERIALS (ASTM)

ASTM A 269	(1994a) Seamless and Welded Austenitic Stainless Steel Tubing for General Service
ASTM B 88	(1993a) Seamless Copper Water Tube
ASTM D 635	(1991) Rate of Burning and/or Extent and Time of Burning of Self-Supporting Plastics in a Horizontal Position
ASTM D 1693	(1970; R 1988) Environmental Stress-Cracking of Ethylene Plastics
ASHRAE-03	(1993; Errata) Handbook, Fundamentals I-P Edition

AMERICAN SOCIETY OF MECHANICAL ENGINEERS (ASME)

ASME B40.1	(1991) Gauges - Pressure Indicating Dial Type - Elastic Element

CODE OF FEDERAL REGULATIONS (CFR)

47 CFR 15	Radio Frequency Devices

INSTITUTE OF ELECTRICAL AND ELECTRONICS ENGINEERS (IEEE)

IEEE C62.41	(1991) Surge Voltages in Low-Voltage AC Power Circuits

NATIONAL ELECTRICAL MANUFACTURERS ASSOCIATION (NEMA)

NEMA 250	(1991) Enclosures for Electrical Equipment (1000 Volts Maximum)

NATIONAL FIRE PROTECTION ASSOCIATION (NFPA)

NFPA 90A	(1993) Installation of Air Conditioning and Ventilating Systems

UNDERWRITERS LABORATORIES (UL)

UL 94	(1991; Rev thru May 1994) Tests for Flammability of Plastic Materials for Parts in Devices and Appliances

UL 268A (1983; Rev Apr 1994) Smoke Detectors for Duct Application

1.2 GENERAL REQUIREMENTS

1.2.1 Standard Products: Material and equipment shall be standard products of a manufacturer regularly engaged in the manufacturing of such products which are of a similar material, design and workmanship. The standard products shall have been in satisfactory commercial or industrial use for 2 years prior to bid opening. The 2-year use shall include applications of equipment and materials under similar circumstances and of similar size. The 2 years experience must be satisfactorily completed by a product which has been sold or is offered for sale on the commercial market through advertisements, manufacturers' catalogs, or brochures. Products having less than a 2-year field service record will be acceptable if a certified record of satisfactory field operation, for not less than 6000 hours exclusive of the manufacturer's factory tests, can be shown. The equipment items shall be supported by a service organization. The Contractor shall submit a certified list of qualified permanent service organizations and qualifications. These service organizations shall be reasonably convenient to the equipment on a regular and emergency basis during the warranty period.

1.2.2 Identical Items: Items of the same classification as specified in PART 2 - PRODUCTS shall be identical, including equipment, assemblies, parts, and components.

1.2.3 Nameplates, Lens Caps, and Tags: Nameplates and lens caps bearing legends as shown and tags bearing device-unique identifiers as shown shall have engraved or stamped characters. Nameplates shall be mechanically attached to HVAC control panel interior doors. A plastic or metal tag shall be mechanically attached directly to each device or attached by a metal chain or wire. Each air flow measurement station shall have a tag showing flow rate range for signal output range, duct size, and identifier as shown.

1.2.4 Verification of Dimensions: The Contractor shall become familiar with all details of the work, shall verify all dimensions in the field, and shall advise the Contracting Officer of any discrepancy before performing any work.

1.2.5 Drawings: Because of the small scale of the drawings, it is not possible to indicate all offsets, fittings, and accessories that may be required. The Contractor shall carefully investigate the mechanical, electrical, and finish conditions that could affect the work to be performed, shall arrange such work accordingly, and shall furnish all work necessary to meet such conditions.

1.2.6 Power-Line Surge Protection: All equipment connected to ac circuits shall be protected from power-line surges. Equipment protection shall meet the requirements of IEEE C62.41. Fuses shall not be used for surge protection.

1.2.7 Surge Protection for Transmitter and Control Wiring: All HVAC system control-panel equipment shall be protected against surges induced on control and transmitter wiring installed outside and as shown. The equipment protection shall be tested in the normal mode and in the common mode, using the following two waveforms:

a. A 10-microsecond by 1000-microsecond waveform with a peak voltage of 1500 volts and a peak current of 60 amperes.

b. An 8-microsecond by 20-microsecond waveform with a peak voltage of 1000 volts and a peak current of 500 amperes.

1.3 SUBMITTALS: Government approval is required for submittals with a "GA" designation; submittals having an "FIO" designation are for information only. The following shall be submitted in accordance with Section 01300 SUBMITTAL PROCEDURES:

SD-01 Data

HVAC Control System; GA.

Manufacturer's equipment data, product specific catalog cuts, and an ASME air-storage tank certificate. Catalog cuts shall be in booklet form indexed by device type. Where multiple components are show on a catalog cut, the application-specific component shall be marked.

Training; GA.

A training course in the maintenance and operation of the HVAC control systems specified, 60 days prior to the start of training. The training shall be oriented to the specific systems being installed under this contract. One training manual shall be furnished for each trainee, plus two additional copies delivered for archival storage at the project site. The manuals shall include the agenda, the defined objectives for each lesson, and a detailed description of the subject matter for each lesson. Two copies of audiovisual materials shall be delivered for archival storage at the project site, either as a part of the printed training manuals or on the same media as that to be used during the training session.

Equipment; FIO.

The equipment data shall be in booklet form and indexed to the unique identifiers. Data sheets that document compliance with the specification and a copy of each HVAC control system bill of materials.

SD-04 Drawings

HVAC control system; GA.

Drawings shall include: a drawing index; a list of symbols; a series of drawings for each HVAC control system using abbreviations, symbols, nomenclature and identifiers as shown on the contract drawings; valve schedules; damper schedules; and a compressed-air station schematic on 34-inch by 22-inch sheets. All detail drawings shall be delivered together as a complete package. Valve and damper schedules may be submitted in advance but shall be included in the complete submittal. Each control-system element on a drawing shall have a unique identifier as shown.

Each series of drawings for an HVAC control system shall include a schematic as shown, a ladder diagram as shown, an equipment schedule as shown, a wiring diagram, a list of equipment with manufacturer and model number, a control-panel arrangement drawing, and an HVAC control-system sequence of operation.

The wiring diagram shall show the interconnection of conductors and cables to HVAC control-panel terminal blocks and to the identified terminals of starters and packaged equipment, with all necessary jumpers and ground connections. The wiring diagram shall show the labels of all conductors. All sources of power required for HVAC control systems and for packaged-equipment control systems shall be identified back to the panelboard circuit breaker number, HVAC system control panel, magnetic starter, or packaged control equipment circuit. Each power supply and transformer not integral to a controller, starter, or packaged equipment shall be shown. The connected volt-ampere load and the power supply volt-ampere rating shall be shown.

The HVAC control-panel arrangement drawing shall show nameplate legends, fabrication details, and enclosure operating temperature-rise calculations. Fabrication details shall include interior door front and rear views, back panel layout and terminal block layout.

The sequence of operation for each HVAC control system shall be in the language and format of this specification. No operational deviations from specified sequences will be permitted without prior written approval of the Contracting Officer. The sequence of operation shall refer to each device by its unique identifier.

The valve schedule shall include each valve's unique identifier, size, flow coefficient (Cv), pressure drop at specified flow rate, spring range, positive-positioner range, and actuator size, supported by close-off pressure data, dimensions, operation rate, and access and clearance requirements data.

The damper schedule shall contain each damper's and each actuator's identifier, nominal and actual sizes, orientation of axis and frame, direction of blade rotation, spring ranges, operation rate, positive-positioner ranges, locations of actuators and damper end switches, arrangement of sections in multisection dampers, and methods of connecting dampers, actuators, and linkages. The damper schedule shall include the maximum expected velocity through the damper at the intended location and the maximum leakage rate at the operating static-pressure differential. The damper schedule shall contain actuator selection data supported by calculations of the torque required to move and seal the dampers, access and clearance requirements.

SD-06 Instructions

Service Organization; FIO.

Six copies of a list of service organizations qualified to service the HVAC control system. The list shall include the service organization name and telephone number.

SD-09 Reports

Testing, Commissioning, and Balancing; GA.

Six copies of the site testing procedures. The site testing procedures shall identify each item to be tested and shall clearly describe each test. The test procedures shall include a list of the test equipment to be used for site testing, manufacturer and model number, and the date of calibration and accuracy of calibration within 6 months of the test date. Six copies of the site testing data. Original copies of all data produced during site testing, including results of each test procedure, after approval of the site tests. Six copies of the performance verification test plans and procedures. The test plan and procedures for the performance verification test, indexed and in booklet form, 60 days before scheduled test dates. Six copies of the performance verification test report, after completion of a successful test. Documentation of test results for the entire HVAC control system, complete and in booklet form and indexed, within 30 days after each test.

SD-18 Records

Testing, Commissioning, and Balancing; GA.

Six copies of the calibration, adjustment and commissioning report which shall include controller setpoints and proportional, integral and derivative-mode constant settings, calibration data for all instruments and controls, and all the data resulting from adjusting the control-system devices and commissioning HVAC control system.

SD-19 Operation and Maintenance Manuals

HVAC Control System; GA.

Six complete copies of operation manuals for each HVAC control system, in booklet form and indexed, outlining the step-by-step procedures required for each HVAC control system's startup, operation, and shutdown. The manuals shall include all detail drawings, equipment data, each controller's configuration check sheet and manufacturer supplied operation manuals for all equipment. Six complete copies of maintenance manuals, indexed in booklet form listing maintenance procedures. The maintenance instructions shall include a maintenance check list for each HVAC control system. Maintenance manuals shall include spare parts data and recommended maintenance tool kits for all control devices. Maintenance instructions shall include recommended repair methods, either field repair, factory repair, or whole-item replacement. If operation and maintenance manuals are provided in a common volume, they shall be clearly differentiated and separately indexed.

Commissioning Procedures; FIO.

Commissioning Procedures for each HVAC control system, and for each type of terminal-unit control system. The procedures shall reflect the language and format of this specification. The commissioning procedures shall refer to the devices by their unique identifiers as shown. The commissioning procedures shall include step-by-step configuration procedures for each controller. The configuration procedures shall be product specific and shall include a configuration check sheet showing all configuration parameters, dip switch settings, and initial recommended P, I and D constants. Six copies of Commissioning Procedures, 60 days prior to system commissioning, in booklet form and indexed, for each type of control device provided, such as controllers, pilot positioners, adjustable relays, and transmitters. Commissioning procedures shall include general instructions on how to set control parameters, including: setpoints; proportional, integral, and derivative mode constants; contact output settings for the specific devices provided. Commissioning procedures shall be specific to each HVAC system, shall detail the steps involved, and shall refer to the procedures in the booklet for specific devices.

1.4 DELIVERY AND STORAGE: Products shall be stored with protection from the weather, humidity and temperature variations, dirt and dust, and other contaminants, within the storage-condition limits published by the equipment manufacturer. Dampers shall be stored so that seal integrity, blade alignment and frame alignment are maintained.

PART 2 PRODUCTS

2.1 GENERAL EQUIPMENT REQUIREMENTS

2.1.1 Electrical and Electronic Devices: All electrical, electronic, and electro-pneumatic devices not located within an HVAC control panel shall have an enclosure NEMA 1 in accordance with NEMA 250 unless otherwise shown.

2.1.2 Standard Signals: The output of all analog transmitters and the analog input and output of all single-loop controllers and function modules shall be 4-to-20 mAdc signals. The signal shall originate from current-sourcing devices and shall be received by current-sinking devices.

2.1.3 Ambient Temperature Limits: Actuators and positive positioners, and transmitters shall operate within temperature limit ratings of plus 35 to 150 degrees F. All panel-mounted instruments shall operate within limit ratings of 35 to 120 degrees F and 10 percent to 95 percent relative humidity, noncondensing. All devices installed outdoors shall operate within limit ratings of minus 35 to 150 degrees F.

2.2 MATERIALS

2.2.1 Tubing

2.2.1.1 Copper: Copper tubing shall conform to ASTM B 88 and shall have sweat fittings and valves.

2.2.1.2 Plastic: Plastic tubing shall have barbed fittings and valves. Plastic tubing shall have the burning characteristics of linear low-density polyethylene tubing, shall be self-extinguishing when tested in accordance with ASTM D 635, shall have UL 94 V-2 flammability classification, and shall withstand stress cracking when tested in accordance with ASTM D 1693. Plastic-tubing bundles shall be provided with Mylar barrier and flame-retardant polyethylene jacket.

2.2.1.3 Stainless Steel: Stainless steel tubing shall conform to ASTM A 269, and shall have stainless steel compression fittings.

2.2.2 Wiring

2.2.2.1 Terminal Blocks: Terminal blocks shall be insulated, modular, feed-through, clamp style with recessed captive screw-type clamping mechanism, shall be suitable for rail mounting, and shall have end plates and partition plates for separation or shall have enclosed sides.

2.2.2.2 Control Wiring for 24-Volt Circuits: Control wiring for 24-volt circuits shall be 18 AWG minimum stranded copper, and shall be rated for 300-volt service.

2.2.2.3 Wiring for 120-Volt Circuits: Wiring for 120-volt circuits shall be 18 AWG minimum stranded copper,and shall be rated for 600-volt service.

2.2.2.4 Analog Signal Wiring Circuits: Analog signal wiring circuits within control panels shall not be less than 20 AWG and shall be rated for 300-volt service.

2.2.2.5 Instrumentation Cable: Instrumentation cable shall be 18 AWG, stranded copper, single or multiple-twisted, minimum 2-inch lay of twist, 100 percent shielded pairs, and shall have a 300-volt insulation. Each pair shall have a 20-AWG tinned-copper drain wire and individual overall pair insulation. Cables shall have an overall aluminum-polyester or tinned-copper cable-shield tape, overall 20-AWG tinned-copper cable drain wire, and overall cable insulation.

2.2.2.6 Nonconducting Wiring Duct: Nonconducting wiring duct in control panels shall have slotted sides, snap-on duct covers, fittings for connecting ducts, mounting clips for securing ducts, and wire-retaining clips.

2.3 ACTUATORS

2.3.1 General Requirements: Actuators shall fail to their spring-return positions as shown on signal or power failure and shall have a visible position indicator. Actuators shall open or close the devices to which they are applied within 60 seconds after a full scale input signal change. Electric or electronic actuators operating in parallel or in sequence shall have an auxiliary actuator driver. Pneumatic actuators shall be rated for 25 psig operating pressure except for high-pressure cylinder-type actuators. Actuators shall be pneumatic, electric or electronic as shown.

2.3.2 Damper Actuators: Actuators shall smoothly operate the devices to which they are applied. Actuators shall fully open and close the devices to which they are applied and shall have a full stroke response time of 60 seconds or less. The actuator stroke shall be limited by an adjustable stop in the direction of power stroke. The actuators shall be provided with mounting and connecting hardware.

2.3.3 Valve Actuators: Valve actuators shall be selected to provide a minimum of 125 percent of the motive power necessary to operate the valve over its full range of operation.

2.3.4 Positive Positioners: Each positive positioner shall be a pneumatic relay with a mechanical feedback mechanism and an adjustable operating range and starting point.

2.4 AUTOMATIC CONTROL VALVES

2.4.1 Valve Assembly: Valves shall have stainless-steel stems and stuffing boxes with extended necks to clear the piping insulation. Valve bodies shall be designed for not less than 862 kPa (125 psi) working pressure or 150 percent of the system operating pressure, whichever is greater. Valve leakage rating shall be .01 percent of rated Cv.

2.4.2 Butterfly-Valve Assembly: Butterfly valves shall be threaded lug type suitable for dead-end service, and for modulation to the fully-closed position, with carbon-steel bodies and noncorrosive discs, stainless steel shafts supported by bearings, and EPDM seats suitable for temperatures from minus 29 to plus 120 degrees C (minus 20 to plus 250 degrees F). Valves shall have a manual means of operation independent of the actuator.

2.4.3 Two-Way Valves: Two-way modulating valves shall have equal-percentage characteristics.

2.4.4 Three-Way Valves: Three-way valves shall provide linear flow control with constant total flow throughout full plug travel.

2.4.5 Duct-Coil and Terminal-Unit-Coil Valves: Control valves with either flare-type or solder-type ends shall be provided for duct or terminal-unit coils. Flare nuts shall be furnished for each flare-type end valve.

2.4.6 Valves for Hot-Water Service

Valves for hot water service below 121 degrees C (250 degrees F) shall be as follows: Bodies for valves 1-1/2 inches and smaller shall be brass or bronze, with threaded or union ends. Bodies for 2-inch valves shall have threaded ends. Bodies for valves from 2 inches to 3 inches inclusive shall be of brass, bronze, or iron. Bodies for valves 4 inches and larger shall be iron. Bodies for valves 2-1/2 inches and larger shall be provided with flanged-end connections. Valve Cv shall be within 100 percent to 125 percent of the Cv shown. Internal trim (including seats, seat rings, modulating plugs, and springs) of valves controlling water hotter than 210 degrees F shall be Type 316 stainless steel. Internal trim for valves controlling water 210 degrees F or less shall be brass or bronze. Nonmetallic parts of hot-water control valves shall be suitable for a minimum continuous operating temperature of 250 degrees F or 50 degrees F above the system design temperature, whichever is higher. Valves 4 inches and larger shall be butterfly valves.

2.5 DAMPERS

2.5.1 Damper Assembly: A single damper section shall have blades no longer than 48 inches and shall be no higher than 72 inches. Maximum damper blade width shall be 8 inches. Larger sizes shall be made from a combination of sections. Dampers shall be steel, or other materials where shown. Flat blades shall be made rigid by folding the edges. All blade-operating linkages shall be within the frame so that blade-connecting devices within the same damper section will not be located directly in the air stream. Damper axles shall be 0.5-inch (minimum) plated steel rods supported in the damper frame by stainless steel or bronze bearings. Blades mounted vertically shall be supported by thrust bearings. Pressure drop through dampers shall not exceed 0.04 inch water gauge at 1,000 fpm in the wide-open position. Frames shall not be less than 2 inches in width. Dampers shall be tested in accordance with AMCA 500.

2.5.1.1 Operating Links: Operating links external to dampers (such as crankarms, connecting rods, and line shafting for transmitting motion from damper actuators to dampers) shall withstand a load equal to at least twice the maximum required damper-operating force. Rod lengths shall be adjustable. Links shall be brass, bronze, zinc-coated steel, or stainless steel. Working parts of joints and clevises shall be brass, bronze, or stainless steel. Adjustments of crankarms shall control the open and closed positions of dampers.

2.5.1.2 Damper Types: Dampers shall be parallel blade type.

2.5.2 Outside-Air, Return-Air, and Relief-Air Dampers: The dampers shall be provided where shown. Blades shall have interlocking edges and shall be provided with compressible seals at points of contact. The channel frames of the dampers shall be provided with jamb seals to minimize air leakage. Dampers shall not leak in excess of 20 cfm per square foot at 4 inches water gauge static pressure when closed. Seals shall be suitable for an operating temperature range of minus 40 to plus 200 degrees F. Dampers shall be rated at not less than 2000 fpm air velocity.

2.5.3 Mechanical and Electrical Space Ventilation Dampers: The dampers shall be as shown. Dampers shall not leak in excess of 80 cfm per square foot at 4 inches water gauge static pressure when closed. Dampers shall be rated at not less than 1500 fpm air velocity.

2.6 DUCT SMOKE DETECTORS: Duct smoke detectors shall be provided in supply and return air ducts in accordance with NFPA 90A. Duct smoke detectors shall conform to the requirements of UL 268A. Duct smoke detectors shall have perforated sampling tubes extended into the air duct. Detector circuitry shall be mounted in a metallic enclosure exterior to the duct. Detectors shall have manual reset. Detectors shall be rated for air velocities that include air flows between 500 and 4000 fpm. Detectors shall be powered from the HVAC control panel. Detectors shall have two sets of normally open alarm contacts and two sets of normally closed alarm contacts. Detectors shall be connected to the building fire alarm panel for alarm initiation. A remote annunciation lamp and accessible remote reset switch shall be provided for duct detectors that are mounted eight feet or more above the finished floor and for detectors that are not readily visible. Remote lamps and switches as well as each affected fan unit shall be properly identified in etched rigid plastic placards.

2.7 INSTRUMENTATION

2.7.1 Measurements: Transmitters shall be calibrated to provide the following measurements, over the indicated ranges, for an output of 4 to 20 mAdc:

a. Conditioned space temperature, from 50 to 85 degrees F.

b. Duct temperature, from 40 to 140 degrees F except that return-air temperature for economizer operation shall be minus 30 to plus 130 degrees F.

c. High-temperature hot-water temperature, from 200 to 500 degrees F.

d. Heating hot-water temperature, from 100 to 250 degrees F.

e. Condenser-water temperature, from 30 to 130 degrees F.

f. Outside-air temperature, from minus 30 to 130 degrees F.

g. Pitot-tube air-flow measurement station and transmitter, from 0 to 0.1 inch water gauge for flow velocities of 700 to 1200 fpm, 0 to 0.25 inch for velocities of 700 to 1800 fpm, or 0 to 0.5 inch for velocities of 700 to 2500 fpm.

h. Electronic air-flow measurement station and transmitter, from 125 to 2500 fpm.

2.7.2 Temperature Instruments

2.7.2.1 Resistance Temperature Detectors (RTD): Temperature sensors shall be 100 ohms 3- or 4-wire RTD. Each RTD shall be platinum with a tolerance of plus or minus 0.1 percent at 32 degrees F,

and shall be encapsulated in epoxy, series 300 stainless steel, anodized aluminum, or copper. Each RTD shall be furnished with an RTD transmitter as specified, integrally-mounted unless otherwise shown.

2.7.2.2 Continuous-Averaging RTD: Continuous-averaging RTDs shall have a tolerance of plus or minus 1.0 degree F at the reference temperature, and shall be of sufficient length to ensure that the resistance represents an average over the cross-section in which it is installed. The sensing element shall have a bendable copper sheath. Each averaging RTD shall be furnished with an RTD transmitter as specified, to match the resistance range of the averaging RTD.

2.7.2.3 RTD Transmitter: The RTD transmitter shall accept a 3-wire 100 ohm RTD input. The transmitter shall be a 2-wire, loop-powered device. The transmitter shall produce a linear 4-to-20 mAdc output corresponding to the required temperature measurement. The output error shall not exceed 0.1 percent of the calibrated span. The transmitter shall include offset and span adjustments.

2.8 THERMOSTATS

2.8.1 General: Thermostat ranges shall be selected so that the setpoint is adjustable between plus or minus 10 degrees F of the setpoint shown. Thermostats shall be electric or low-voltage electronic.

2.8.2 Nonmodulating Room Thermostats: Contacts shall be single-pole double-throw (SPDT), hermetically sealed, and wired to identified terminals. Maximum differential shall be 5 degrees F. Room thermostats shall be enclosed with separate locking covers (guards). Thermostats shall have manual switches as required by the application.

2.9 INDICATING DEVICES

2.9.1 Thermometers

2.9.1.1 Piping System Thermometers: Piping system thermometers shall have brass, malleable iron or aluminum alloy case and frame, clear protective face, permanently stabilized glass tube with indicating-fluid column, white face, black numbers, and a 9-inch scale. Thermometers for piping systems shall have rigid stems with straight, angular, or inclined pattern.

2.9.1.2 Piping System Thermometer Stems: All thermometer stems shall have expansion heads as required to prevent breakage at extreme temperatures. On rigid-stem thermometers, the space between bulb and stem shall be filled with a heat-transfer medium.

2.9.2 Pressure Gauges: Gauges shall be 2 inch (nominal) size, back-connected, suitable for field or panel mounting as required, shall have black legend on white, background, and shall have a pointer traveling through a 270-degree arc. Accuracy shall be plus or minus 3 percent of scale range. Gauges shall meet requirements of ASME B40.1

Gauges for hydronic-system applications shall have ranges and graduations as shown.

2.10 SINGLE-LOOP CONTROLLERS

2.10.1 Controller Features: The controller shall be a microprocessor-based single-loop device that does not require Contractor-generated software. The controller shall meet 47 CFR 15, for Class A computing devices. The controller panel cutout shall be 3.62 inches by 3.62 inches. The controller shall have field scalable process variable, a remote setpoint analog input and an analog output with adjustable high and low end limits and proportional control manual reset adjustment. The analog output shall result from proportional, integral and derivative (PID) control. The analog output shall be configurable as direct acting and reverse acting. The controller shall have keyboard, display, auto/manual selection for control of its analog output, remote setpoint adjustment/local setpoint adjustment selection with adjustable high-

end and low-end limits, ratio and bias adjustments on remote setpoint input, operator-initiated self-tune/manual-tune selection, anti-reset wind-up feature, and 2 independent SPDT contact-closure outputs (PV alarm and PV deviation alarm). The controller shall be configurable to power-up in manual with local setpoint control, in automatic with local setpoint control and in automatic with remote setpoint control. The range of hysteresis adjustment shall be not smaller than from 1 percent to 5 percent of process variable input span. The controller shall power the analog output loop to 20 milliamperes when connected to a load of 600 ohms. The controller shall be capable of retransmitting the process variable to 20 milliamperes when connected to 600 ohms. The controller shall have 5-year battery backup to store operating parameters or shall have nonvolatile memory.

2.10.2 Parameter Input and Display: All control parameters shall be entered and displayed directly, in the correct engineering units, through a series of keystrokes on a front-panel display with a 3-1/2 digit, 7-segment display, with decimal point and polarity indication. The use of this display shall allow manual interrogation of setpoint, mode constants, and values of the process variable and output.

2.10.3 Controller Electrical Requirements: Each controller shall be powered by 120 volts ac. Power consumption shall not be greater than 20 watts. Each controller shall provide electrical noise isolation between the ac power line and the process variable input, remote setpoint input, and output signals and of not less than 100 db at 60 Hz common-mode rejection ratio, and not less than 60 db at 60 Hz normal-mode rejection ratio.

2.11 HVAC SYSTEM CONTROL PANELS

2.11.1 Panel Assembly: The panel shall be fabricated as shown, and the devices shall be mounted as shown. Each panel shall be fabricated as a bottom-entry connection point for control-system electric power, control-system main air source, control-system wiring, pneumatic tubing, interconnection of control systems, interconnection of starters and external shutdown devices, and energy monitoring and control systems (EMCS) interface. Each panel shall have an operating temperature rise of not greater than degrees F above an ambient temperature of 100 degrees F. The control panel shall be factory assembled and shipped to the job site as a single unit.

2.11.2 Panel Electrical Requirements: Each control panel shall be powered by nominal 120 volts ac , fused at 5 amps, and terminating at the panel on terminal blocks. Instrument cases shall be grounded. Interior panel, interior door, and exterior panel enclosure shall be grounded.

2.11.3 Enclosure: The enclosure for each panel shall be a NEMA 12 single-door wall-mounted box conforming to NEMA 250, with continuous hinged and gasketed exterior door with print pocket and key lock, continuous hinged interior door, interior back panel, and ventilation louvers in back surface as shown. Inside finish shall be white enamel, and outside finish shall be gray primer over phosphatized surfaces.

2.11.4 Mounting and Labeling: Controllers, pilot lights, switches, IP's, and pressure gauge shall be mounted on the interior door as shown. Power conditioner, fuses and duplex outlet shall be mounted on the interior of the cabinet as shown. All other components housed in the panel shall be mounted on the interior back panel surface of the enclosure, behind the door on rails as shown. Controllers and gauges shall be identified by a plastic or metal nameplate that is mechanically attached to the panel. The nameplate shall have the inscription as shown. Lettering shall be cut or stamped into the nameplate to a depth of not less than 1/64 inch, and shall show a contrasting color, produced by filling with enamel or lacquer or by the use of a laminated material. Painting of lettering directly on the surface of the interior door or panel is not permitted.

2.11.5 Wiring and Tubing

2.11.5.1 Current-to-Pneumatic Transducers (IP): Current-to-Pneumatic Transducers (IP) shall be piped to bulkhead fittings in the bottom of the panel with a 2-inch loop to accommodate IP replacement and shall be wired to identified terminal blocks.

2.11.5.2 Wiring Interconnections: Wiring shall be installed in wiring ducts in such a way that devices can be added or replaced without disturbing wiring that is not affected by the change. Wiring to all devices shall have a 4-inch wiring loop in the horizontal wiring duct at each wiring connection. There shall be no wiring splices within the control panel. All interconnections required for power or signals shall be made on device terminals or panel terminal blocks, with not more than two wires connected to a terminal.

2.11.5.3 Terminal Blocks: Terminal blocks shall be arranged in groups as shown. Instrument signal grounds at the same ground reference level shall end at a grounding terminal for connection to a common ground point. Wiring-shield grounds at the same reference level shall end at a grounding terminal for connection to a common ground point. Grounding terminal blocks shall be identified by reference level.

2.11.5.4 Wiring Identification: All wiring connected to controllers, time clocks and function modules shall be identified by function and polarity with full word identifiers, i.e., process variable, input, remote setpoint input and control output.

2.11.6 EMCS Terminal Blocks: Terminal blocks shall be provided for connections to EMCS as shown. Analog signals shall require only the removal of jumpers to interface to EMCS.

2.12 MANUAL EMERGENCY FAN SHUTOFF SWITCHES

Manual emergency fan shutdown switches shall be provided for air distribution fan in accordance with NFPA 90A. Switches shall be the manual-reset type. Switches shall be located and mounted in an accessible manner, approximately 48 inches above the finished floor. Switches shall be properly identified in etched rigid plastic placards.

PART 3 EXECUTION

3.1 GENERAL INSTALLATION CRITERIA: The HVAC control system shall be completely installed and ready for operation, as specified and shown. Dielectric isolation shall be provided where dissimilar metals are used for connection and support. Penetrations through and mounting holes in the building exterior shall be made watertight. The HVAC control-system installation shall provide clearance for control-system maintenance by maintaining access space between coils, access space to mixed-air plenums, and other access space required to calibrate, remove, repair, or replace control-system devices. The control-system installation shall not interfere with the clearance requirements for mechanical and electrical system maintenance.

3.1.1 Device-Mounting Criteria: Devices mounted in or on piping or ductwork, on building surfaces, in mechanical/electrical spaces, or in occupied space ceilings shall be installed in accordance with manufacturers' recommendations and as shown. Control devices to be installed in piping and ductwork shall be provided with all required gaskets, flanges, thermal compounds, insulation, piping, fittings, and manual valves for shutoff, equalization, purging, and calibration. Strap-on temperature sensing elements shall not be used except as specified.

3.1.2 Wiring Criteria: Wiring external to control panels, including low-voltage wiring, shall be installed in metallic raceways. Wiring shall be installed without splices between control devices and HVAC control panels. Instrumentation grounding shall be installed as necessary to prevent ground loops, noise, and surges from adversely affecting operation of the system. Cables and conductors wires shall be tagged at both ends, with the identifier shown on the shop drawings, in accordance with the requirements of

Section 16415 ELECTRICAL WORK, INTERIOR. Other electrical work shall be as specified in Section 16415 ELECTRICAL WORK, INTERIOR and as shown.

3.1.3 Controller Output Loop Impedance Limitation: Controller output loops shall be constructed so that total circuit impedance connected to the analog output of a single-loop controller shall not exceed 600 ohms.

3.2 CONTROL-SYSTEM INSTALLATION

3.2.1 Damper Actuators: Actuators shall not be mounted in the air stream. Multiple actuators operating a common damper shall be connected to a common drive shaft. Actuators shall be installed so that their action shall seal the damper to the extent required to maintain leakage at or below the specified rate and shall move the blades smoothly.

3.2.2 Local Gauges for Actuators: Pneumatic actuators shall have an accessible and visible receiver gauge installed in the tubing lines at the actuator as shown.

3.2.3 Room-Instrument Mounting: Room instruments shall be mounted so that their sensing elements are 1.5 m 5 feet above the finished floor unless otherwise shown. Temperature setpoint device shall be recess mounted.

3.2.4 Low-Temperature-Protection Thermostats: For each 20 square feet of coil-face area, or fraction thereof, a thermostat shall be provided to sense the temperature at the location shown. The thermostat sensing element shall be installed in a serpentine pattern.

3.2.5 Averaging-Temperature Sensing Elements: Sensing elements shall have a total-element minimum length equal to one linear foot per square foot of duct cross-sectional area.

3.2.7 Indication Devices Installed in Piping and Liquid Systems: Gauges in piping systems subject to pulsation shall have snubbers. Thermometers and temperature sensing elements installed in liquid systems shall be installed in thermowells.

3.3 CONTROL SEQUENCES OF OPERATION

3.3.1 General Requirements: These requirements shall apply to all primary HVAC systems unless modified herein. The sequences describe the actions of the control system for one direction of change in the HVAC process analog variable, such as temperature, humidity or pressure. The reverse sequence shall occur when the direction of change is reversed.

3.3.2 Single Building Hydronic Heating with Hot Water Boiler

a. All Modes - The outside-air temperature controller shall accept a signal at its process variable input from a sunshielded outside-air temperature sensing element and transmitter located as shown. The outside air temperature controller process variable relay contact output shall start and stop the distribution pump at the outside temperatures as shown. The analog output of the controller shall send a signal to the remote setpoint input of the primary hydronic-heating system temperature controller to reset the hydronic-heating supply temperature in a linear schedule as shown. The hydronic-heating supply temperature controller shall accept a signal at its process variable input from a temperature sensing element and transmitter located in the hydronic-heating supply line and the controller output shall modulate the hydronic-heating system control valve to maintain the setpoint in the hydronic-heating supply line.

b. Occupied Mode - When the clock places the system in the occupied mode, a space-temperature sensing element and transmitter located as shown shall signal a space-temperature controller which

shall maintain the setpoint as shown by modulating the secondary-hydronic-system zone valve. In this mode of operation, the controller setpoint shall be adjustable from the sensor and transmitter location.

c. Unoccupied Mode - When the clock places the system in the unoccupied mode, the setpoint of the controller shall be as shown and shall be adjustable at the HVAC control panel.

3.3.3 Heating and Ventilating Sequence

3.3.3.1 Occupied, Unoccupied, and Ventilation-Delay Operating Modes: Ventilation-delay-mode timing shall start prior to the occupied-mode timing. The clock shall close a contact, which shall turn on the ventilation-delay pilot light and energize a relay which shall prevent the outside-air damper from opening. At the time shown, the clock shall close a contact which shall turn on the occupied-mode pilot light and shall place the system in the occupied mode. At the expiration of the ventilation-delay-mode timing period, the clock shall open the contact to turn off the ventilation-delay-mode pilot light and de-energized a relay to allow the outside-air damper to open. At the time shown, the clock shall open the contact to turn off the occupied-mode pilot light and shall place the control system in the unoccupied mode of operation.

3.3.3.2 Outside-Air, Return-Air, and Relief-Air Dampers

a. Occupied Mode - The outside-air, return-air, and relief-air dampers shall be under space temperature and economizer control.

b. Unoccupied and Ventilation-Delay Modes - The dampers shall return to their normal positions.

3.3.3.3 Supply-Fan Control

a. Occupied and Ventilation-Delay Modes: Supply Fan shall start, and shall operate continuously.

b. Unoccupied Mode - The supply fan shall cycle from a night thermostat. The fan shall start at and stop at the setpoints as shown.

3.3.3.4 Filter: A differential-pressure switch across the filter shall turn on the filter pilot light when the pressure drop across the filter reaches the setpoint as shown.

3.3.3.5 Space Temperature Control: A space-temperature sensing element and transmitter operating through a space-temperature controller shall first gradually shut off the heating-coil valve. After the controller output passes through a deadband, the controller shall then gradually operate the outside-air damper to admit outside air beyond the minimum quantity to maintain the setpoint as shown.

3.3.3.6 Emergency Fan Shutdown: Activation of a duct smoke detector in the supply-air or return-air ductwork, or activation of a manual emergency fan shutdown switch shall cause the associated fan to shutdown in accordance with NFPA 90A. Activation of these devices shall operate a pilot light on the HVAC control panel. The panel shall require manual resetting after the detector and the manual switch are reset.

3.3.4 Single-Zone with Hydronic Heating Coils No Return Fan

3.3.4.1 Occupied, Unoccupied, and Ventilation-Delay Modes: Ventilation-delay-mode timing shall start prior to the occupied-mode timing. The clock shall close a contact, which shall turn on the ventilation-delay pilot light and energize a relay which shall prevent the outside-air damper from opening. At the time shown, the clock shall close a contact which shall turn on the occupied-mode pilot light and shall place the system in the occupied mode. At the expiration of the ventilation-delay-mode timing

period, the clock shall open the contact to turn off the ventilation-delay-mode pilot light and de-energize a relay to allow the outside-air damper to open. At the time shown, the clock shall open the contact to turn off the occupied-mode pilot light and shall place the control system in the unoccupied mode of operation.

3.3.4.2 Outside-Air, Return-Air, and Relief-Air Dampers

a. Occupied Mode The outside-air, return-air, and relief-air dampers shall be under space temperature and economizer control.

b. Unoccupied and Ventilation-Delay Modes - The dampers shall return to their normal positions as shown.

3.3.4.3 Supply-Fan Control

a. Occupied and Ventilation-Delay Modes: Supply Fan shall start, and shall operate continuously.

b. Unoccupied Mode - The supply fan shall cycle from a night thermostat. The fan shall start at and stop at the setpoints as shown.

3.3.4.4 Filter: A differential-pressure switch across the filter shall turn on the filter pilot light when the pressure drop across the filter reaches the setpoint as shown.

3.3.4.5 Freeze Protection: All Modes - A freezestat, located as shown, shall stop the supply fan, cause the outside air, return air, and relief air dampers to return to their normal position; and shall turn on the low temperature pilot light in the HVAC control panel if the temperature drops below the freezestat's setpoint as shown. Return to the normal mode of operation shall require manual reset at the freezestat and at the HVAC control panel.

3.3.4.6 Space-Temperature-Sequenced Heating and Cooling Control: A space-temperature sensing element and transmitter operating through a space-temperature controller shall maintain the setpoint by sequencing the valves and dampers as shown. On a rise in space temperature, the space-temperature controller shall first gradually close the heating-coil valve. After the controller output passes through a deadband, the controller shall then gradually operate the outside air damper to admit outside air beyond the minimum quantity, except that when the economizer controller places the control system in the minimum-outside-air mode, the outside-air damper shall remain open to the setting as determined by the minimum position switch. After the outside-air damper is fully open, upon a further rise in space temperature the controller shall then gradually open the cooling-coil valve to maintain the setpoint as shown.

3.3.4.7 Emergency Fan Shutdown: Activation of a duct smoke detector in the supply-air or return-air ductwork, or activation of a manual emergency fan shutdown switch shall cause the associated fan to shutdown in accordance with NFPA 90A. Activation of these devices shall operate a pilot light on the HVAC control panel. The panel shall require manual resetting after the detector and the manual switch are reset.

3.4 COMMISSIONING PROCEDURES

3.4.1 General Procedure

3.4.1.1 Evaluations: The Contractor shall make the observations, adjustments, calibrations, measurements, and tests of the control systems, tune the controllers, set the clock schedule, and make any necessary control-system corrections to ensure that the systems function as described in the sequence of operation. The Contractor shall permanently record, on system equipment schedule, the final setting of controller proportional, integral and derivative constant settings, setpoint, manual reset setting, maximum

and minimum controller output, and ratio and bias settings, in units and terminology specific to the controller.

3.4.1.2 Item Check: An item-by-item check of the sequence of operation requirement shall be performed using Steps 1 through 4 in the specified control system commissioning procedures. Steps 1, 2, and 3 shall be performed with the HVAC system shut down; Step 4 shall be performed after the HVAC system has been started. Signals used to change the mode of operation shall originate from the actual HVAC control device intended for the purpose, such as the time clock. External input signals to the HVAC control panel (such as EMCS, starter auxiliary contacts, and external systems) may be simulated in Steps 1, 2, and 3. With each operational-mode change signal, Pilot lights and HVAC-panel output-relay contacts shall be observed to ensure that they function. All terminals assigned to EMCS shall be checked and observed to ensure that the proper signals are available.

3.4.1.3 Weather-Dependent Test Procedures: Weather-dependent test procedures that cannot be performed by simulation shall be performed in the appropriate climatic season. When simulation is used, the Contractor shall verify the actual results in the appropriate season.

3.4.1.4 Configuration: The Contractor shall configure each controller for its specified service.

3.4.1.5 Two-Point Accuracy Check: A two-point accuracy check of the calibration of each HVAC-control-system sensing element and transmitter shall be performed by comparing the HVAC-control-panel readout to the actual value of the variable measured at the sensing element and transmitter or air-flow measurement station location. Digital indicating test instruments shall be used, such as digital thermometers, motor-driven psychrometers, and tachometers. The test instruments shall be at least twice as accurate as the specified sensing element-to-controller readout accuracy. The calibration of the test instruments shall be traceable to NIST standards. The first check point shall be with the HVAC system in the shutdown condition, and the second check point shall be with the HVAC system in an operational condition. Calibration checks shall verify that the sensing element-to-controller readout accuracies at two points are within the specified product accuracy tolerances. If not, the device shall be recalibrated or replaced and the calibration check repeated.

3.4.1.6 Insertion, Immersion Temperature: Insertion-temperature and immersion-temperature sensing element and transmitter-to-controller readout calibration accuracy shall be checked at one physical location along the axis of the sensing element.

3.4.1.7 Averaging Temperature: Averaging-temperature sensing element and transmitter-to-controller readout calibration accuracy shall be checked every 2 feet along the axis of the sensing element in the proximity of the sensing element, for a maximum of 10 readings. These readings shall then be averaged.

3.4.1.8 Controller Stations: The Contractor shall use the controllers' MANUAL/AUTOMATIC stations as the means of manipulating control devices, such as dampers and valves, to check IP operation and to effect stable conditions prior to making measurement checks.

3.4.1.9 Controller-Tuning Procedure: The Contractor shall perform a controller-tuning procedure, which shall consist of setting the initial proportional, integral, and derivative (PID) mode constants, controller setpoints, and logging the settings. Tuning shall be self-tuning operation by the controller unless manual tuning is necessary.

3.4.1.10 Controller Manual-Tuning Procedure: Where required, the controller manual-tuning procedure shall be performed in three steps. Using a constant-temperature-setpoint controller as an example, these steps are:

a. Step A:

(1) The controller MANUAL/AUTO station shall be indexed to the AUTO position and the integral- and derivative-mode constants set to zero.

(2) The proportional-mode constant shall be set to an initial setting of 8 percent. (This corresponds to 1.5 psi per degree F or 2.0 ma per degree F proportional controller output change for a 100-degree F transmitter span.) This causes the controller output signal to vary from live zero output to full output for an input signal change representing an 8-degree F change.

(3) Controllers for other variables, such as relative humidity and static pressure, shall have their proportional-mode constants set initially in a similar manner for an achievable output range proportional to the transmitter span.

b. Step B:

(1) The controller temperature setpoint shall be set at any achievable temperature. The controller output and transmitter input shall be observed.

(2) If the transmitter input continuously oscillates above and below the setpoint without settling at a fixed value, or if such oscillation increases, the proportional-mode constant is too small.

(3) If the proportional-mode constant is too small, increase it in steps until the transmitter input indicates stable control at any temperature, provided that the controller output is not at either extreme of the output range.

(4) If the temperature control point slowly drifts toward or away from the controller setpoint, the proportional-mode constant is too large. Its setting shall be decreased in steps until oscillations occur as described in the preceding paragraphs, and then the setting shall be increased until stable control occurs.

(5) A step change in controller setpoint shall be introduced. This should cause the controller to overshoot the setpoint slightly, with each subsequent overshoot peak value decreasing by a factor of 2/3 until stable control is achieved at, above, or below the setpoint.

(6) Next, the integral-mode constant setting shall be increased in small steps, and setpoint changes shall be introduced until control point and controller setpoint coincide at stable control. This should happen consistently after a setpoint change within a short time, such as 5 to 10 minutes.

c. Step C:

(1) Unless the HVAC process variable changes rapidly, the derivative-mode constant setting can remain at zero.

(2) If derivative control is needed, the derivative-mode constant shall be gradually increased.

(3) Step changes in controller setpoint shall be introduced, and the derivative-mode constant setting adjusted until stable control is achieved.

3.4.1.11 Setting the Controller: After the controller manual-tuning procedure is complete, the controller shall be set at the setpoint as shown.

3.4.2 All-Air Small Packaged Unitary (HP-1A & B Equipment): The schedules shall be manually entered for day-temperature and night-temperature setpoints as shown. The fan "AUTO/ON" switch shall be set to "ON". The time shall be manually entered as "DAY". The heating-cooling switch shall be raised to "HEATING" and cooling shall be off. The temperature setpoint shall be raised and heating shall start. The heating/cooling switch shall be set to "COOLING" and heat shall be off. The temperature

setpoint shall be lowered and cooling shall start. The fan "AUTO/ON" switch shall be set to "AUTO" and the foregoing procedure repeated. The fan shall start and stop automatically with the starting and stopping of heating and cooling. The time shall be manually entered as "NIGHT". The foregoing procedures shall be repeated. When the system is verified as operational, the correct "DAY" and "NIGHT" temperature settings shall be restore and the correct time restored. The power to the thermostat shall be shut off and it shall be verified that the thermostat clock keeps time. The results of testing of one of each type of unit shall be logged.

3.4.3 Fan-Coil-Unit (FCU-1, 2 & 3): The single-temperature hydronic system shall be set to heating. Each space thermostat temperature setting shall be turned up so that it makes contact and turns the fan-coil unit on. The fan-coil unit fan shall start and the valves shall open to flow through the coils. Each space thermostat temperature setting shall be turned down and the fan-coil unit fans shall stop. The valves close to flow through the coils. Each space thermostat temperature setting shall be turned up; contact shall be broken and the fan-coil unit fans stop. The valves shall close to flow through the coil. Each space thermostat temperature setting shall be turned down. The fan-coil unit fans start and the valves open to flow through the coils. The thermostats shall be set at the temperature setpoints as shown. The results of testing of one of each type of unit shall be logged.

3.4.4 Single Building Hydronic-Heating with Hot Water Boiler: Steps for installation shall be as follows:

a. Step 1 - System Inspection: The HVAC system shall be observed in its shutdown condition. It shall be verified that power and main air are available at the HVAC system control panel.

b. Step 2 - Calibration Accuracy Check with HVAC System Shutdown: Readings shall be taken with a digital thermometer at each temperature- sensing element location. Each controller display shall be read, and the thermometer and controller-display readings logged. The calibration accuracy of the sensing element-to-controller readout for outside-air temperature and system-supply temperature shall be checked.

c. Step 3 - Actuator Range Adjustments: A signal shall be applied to the actuator using the controller "MANUAL/AUTO" station in "MANUAL." The proper operation of the actuators and positioners for all valves shall be verified visually. The signal shall be varied from live zero of 4 ma to 20 ma, and it shall be verified that the actuators travel from zero stroke to full stroke within the signal range. It shall be verified that all sequenced actuators move from zero stroke to full stroke in the proper direction, and move the connected device in the proper direction from one extreme position to the other. Example: NC actuators are closed at 4 ma and are open at 20 ma. The signal levels that move the controlled device to its extreme positions shall be logged.

d. Step 4 - Control-System Commissioning:

(1) The outside-air temperature controller "MANUAL/AUTO" station shall be indexed to the "MANUAL" position and the two-point calibration sensing element-to-controller readout accuracy check for the outside-air temperature performed. The controller proportional band adjustment, the setpoint, the manual reset, and the maximum controller output shall be set to achieve the outside-air temperature schedule as shown.

(2) A signal shall be applied to simulate that the outside-air temperature is above the setpoint as shown. It shall be verified that Pump and Boiler stop. A signal shall be applied to simulate that the outside-air temperature is below the setpoint as shown. It shall be verified that Pump start and Boiler operates.

(3) The system's supply-temperature controller "MANUAL/AUTO" station shall be indexed to the "MANUAL" position, and the two-point calibration accuracy check of the sensing element-to-controller readout for the system-supply temperature performed. The controller shall be placed in the remote-setpoint mode. The remote setpoint for temperature schedule shall be set as shown. The controller "MANUAL/AUTO" station shall be indexed to the "AUTO" position, and the controller setup and tuning

procedures performed. The controller shall be set at a system-supply temperature setpoint within the schedule as shown and the mode-constant setpoints logged. Signals of 8 ma and 16 ma shall be sent to the remote setpoint from the outside-air temperature controller, to verify that the controller setpoint changes to the appropriate values. The outside-air temperature controller's "MANUAL/AUTO" station shall be indexed to "AUTO."

(4) An occupied-mode signal shall be applied. Each space-temperature controller "MANUAL/AUTO" station shall be indexed to "MANUAL." The calibration accuracy check of sensing element-to-controller readout for each space temperature shall be performed, and the values logged. The controller shall be placed in the remote-setpoint mode. Setpoint shall be set for 70 degrees F at midrange, 55 degrees F at the low end, and 85 degrees F at the high end. The proper action of the temperature-setpoint device at the space-temperature sensing element and transmitter location shall be verified. Each controller "MANUAL/AUTO" station shall be indexed to the "AUTO" position and the controller-tuning procedure performed. An unoccupied-mode signal shall be applied and it shall be verified that the controller setpoint changes to the unoccupied-mode setting. The temperature setpoint device shall be set to the space-temperature setpoint as shown.

3.4.5 Heating and Ventilating: Steps for installation are as follows:

a. Step 1 - System Inspection: The HVAC system shall be observed in its shutdown condition. The system shall be checked to see that power and main air are available at the HVAC system control panel, the outside-air damper and relief-air damper are closed, and the return-air damper is open.

b. Step 2 - Calibration Accuracy Check with HVAC System Shutdown: Readings shall be taken with a digital thermometer at each temperature-sensing element location. Each controller display shall be read, and the thermometer and controller-display readings logged. The calibration accuracy of the sensing element-to-controller readout for space temperature shall be checked.

c. Step 3 - Actuator Range Adjustments: A signal shall be applied to the actuator, using the controller "MANUAL/AUTO" station in "MANUAL." The proper operation of the actuators and positioners for all dampers and valves shall be verified. The signal shall be varied from live zero of 4 ma to 20 ma, and it shall be verified that the actuators travel from zero stroke to full stroke within the signal range. It shall be verified that all sequenced and parallel-operated actuators move from zero stroke to full stroke in the proper direction, and move the connected device in the proper direction from one extreme position to the other. Example: NC actuators are closed at 4 ma and are open at 20 ma. The signal levels that move the controlled device to its extreme positions shall be logged.

d. Step 4 - Control-System Commissioning:

(1) With the fan ready to start, the ventilation-delay-mode signal shall be applied, and it shall be verified that the ventilation-delay-mode pilot light turns on. The occupied-mode signal, shall be applied and it shall be verified that the occupied-mode pilot light turns on and that Supply Fan starts. It shall be verified that the outside-air and relief-air dampers are closed, the return-air damper is open, and the heating-coil valve is under control, by slightly changing the controller outputs. The ventilation-delay-mode signal shall be release, and it shall be verified that the ventilation-delay-mode pilot light turns off and that the outside-air, return-air, and relief-air dampers come under control by changing the controller output.

(2) The minimum-outside-air-mode signal shall be applied. It shall be verified that the outside-air damper opens to minimum position and the economizer pilot light is off.

(3) The space-temperature controller "MANUAL/AUTO" station shall be indexed to the "MANUAL" position, and the calibration accuracy check for sensing element-to-controller readout shall be performed. The controller shall be placed in the remote-setpoint mode. Setpoint shall be set for 70 degrees F at

midpoint, 55 degrees F at the low end, and 85 degrees F at the high end. Proper operation of the temperature setpoint device at the space temperature sensing element and transmitter location shall be verified. The controller "MANUAL/AUTO" station shall be indexed to the "AUTO" position, and the controller-tuning procedure and shall be performed. The temperature setpoint device shall be set to the space temperature setpoint as shown.

(4) An unoccupied-mode signal shall be applied, and it shall be verified that the occupied-mode pilot light turns off, the HVAC system shuts down, and the control system assumes the specified shutdown conditions. The night-thermostat temperature setting shall be turned upward, and it shall be verified that the HVAC system starts; the setting shall be turned downward, and it shall be verified that the HVAC system stops. The night thermostat shall be set at the setpoint as shown.

(5) With the HVAC system running, a filter differential-pressure switch input signal shall be simulated, at the device. It shall be verified that the filter pilot light turns on, and that contact output at EMCS terminals is made. The differential-pressure switch shall be set at the setpoint as shown.

(6) With the HVAC system running, a low-temperature-protection thermostat trip input signal shall be simulated, at the device. HVAC system shutdown shall be observed. It shall be verified that low-temperature pilot light turns on and contact output at EMCS terminals shall be verified. The thermostat shall be set at the setpoint as shown. The HVAC shall be restarted by manual restart, and it shall be verified that the pilot light turns off.

(7) With the HVAC system running, a smoke-detector trip input signal shall be simulated at each detector, and verification of control-device actions and interlock functions as described in the Sequence of Operation shall be made. Simulation shall be performed without false-alarming any Life Safety systems. It shall be verified that the HVAC system shuts down and that the smoke-detector pilot light turns on, and contact output at EMCS terminals shall be verified. The detectors shall be reset. The HVAC system shall be restarted by manual reset, and it shall be verified that the pilot light turns off.

3.5 TESTING, COMMISSIONING, AND BALANCING

3.5.1 Site Testing: The Contractor shall provide all personnel, equipment, instrumentation, and supplies necessary to perform all site testing, calibration, adjusting and commissioning. The tests shall not be conducted during scheduled seasonal off-periods of base heating and cooling systems. Wiring shall be tested for continuity and for ground, open, and short circuits. Tubing systems shall be tested for leaks. HVAC control panels shall be pretested off-site as a functioning assembly ready for field connections, calibration, adjustment, and commissioning of the operational HVAC control system. The Contractor shall obtain written Government approval of the specific site-testing procedures prior to any test. Written notification of any planned site-testing, commissioning or tuning shall be given to the Government at least 14 calendar days prior to any test.

3.5.2 Control System Calibration, Adjustments, and Commissioning: All instrumentation and controls shall be calibrated and the specified accuracy shall be verified using test equipment with calibration traceable to NIST standards. Mechanical control devices shall be adjusted to operate as specified. Control system commissioning shall be performed for each HVAC system.

3.5.3 Performance Verification Test: The Contractor shall demonstrate compliance of the HVAC control system with the contract documents. Using test plans and procedures previously approved by the Government, the Contractor shall demonstrate all physical and functional requirements of the project. The performance verification test procedures shall explain, step-by-step, the actions and expected results that will demonstrate that the control systems perform in accordance with the sequences of operation. The performance verification test shall not be started until after receipt by the Contractor of written permission by the Government, based on the Contractor's written certification of successful completion of Contractor site testing as specified.

3.5.4 Coordination with HVAC System Balancing: The Contractor shall tune the HVAC control system after all air-system and hydronic-system balancing has been completed, minimum damper positions set and a report has been issued. Commissioning, except for tuning of controllers, may be performed prior to or simultaneous with HVAC system balancing.

3.5.5 Posted Instructions: Instructions on 8-1/2-by-11-inch sheets and half-size plastic laminated drawings for each system, showing the final installed conditions, shall be placed in each HVAC control panel. The posted instructions shall include the control sequence, control schematic, ladder diagram, wiring diagram, valve schedules, damper schedules, panel arrangement drawings, commissioning procedures, controller configuration check sheet with final configuration record, preventive maintenance instructions and single-loop controller operators manual.

3.6 TRAINING

3.6.1 Training-Course Requirements: A training course shall be conducted for 3 operating staff members designated by the Contracting Officer. The training period, for a total of 32 hours of normal working time, shall be conducted within 30 days after successful completion of the performance verification test. The training course shall be conducted at the project site. The Contractor shall be responsible for furnishing all audiovisual equipment and two sets of all other training materials and supplies. A training day is defined as 8 hours of classroom instruction, including two 15-minute breaks and excluding lunchtime, Monday through Friday, during the daytime shift in effect at the training facility. The Contractor shall submit an outline for the course, with a proposed time schedule. Approval of the planned training schedule shall be obtained from the Government at least 30 days prior to the start of the training.

3.6.2 Training-Course Content: For guidance in planning the required instruction, the Contractor shall assume that attendees will have a high school education or equivalent, and are familiar with HVAC systems. The training course shall cover all of the material contained in the Operating and Maintenance Instructions, the layout and location of each HVAC control panel, the layout of one of each type of unitary equipment and the locations of each, the location of each system-control device external to the panels, the location of the compressed-air station, preventive maintenance, troubleshooting, diagnostics, calibration, adjustment, commissioning, tuning, and repair procedures. Typical systems and similar systems may be treated as a group, with instruction on the physical layout of one such system. The results of the performance verification test and the calibration, adjustment and commissioning report shall be presented as benchmarks of HVAC control-system performance by which to measure operation and maintenance effectiveness.

-- End of Section --

INDEX

SECTION 15990

TESTING, ADJUSTING AND BALANCING OF HVAC SYSTEMS

Paragraph		Page
1.1	REFERENCES	15990-1
1.2	GENERAL REQUIREMENTS	15990-1
1.3	INSTRUMENT ACCURACY REQUIREMENTS	15990-2
1.4	SUBMITTALS	15990-2
3.1	TESTING AND BALANCING	15990-3
3.2	CONTROL SYSTEMS	15990-4

SECTION 15990

TESTING, ADJUSTING AND BALANCING OF HVAC SYSTEMS

PART 1 GENERAL

1.1 REFERENCES: The publications listed below form a part of this specification to the extent referenced. The publications are referred to in the text by basic designation only.

AMERICAN NATIONAL STANDARDS INSTITUTE (ANSI)

ANSI S1.4 (1983; S1.4A) Sound Level Meters

ANSI S1.11 (1986) Octave-Band and Fractional- Octave-Band Analog and Digital Filters

AMERICAN SOCIETY OF HEATING, REFRIGERATING AND AIR CONDITIONING ENGINEERS (ASHRAE)

ASHRAE 111 (1988) Practices for Measurement, Testing, Adjusting, and Balancing of Building Heating, Ventilation, Air-Conditioning and Refrigeration Systems

ASSOCIATED AIR BALANCE COUNCIL (AABC)

AABC MN-1 (1989) National Standards for Testing and Balancing Heating, Ventilating, and Air Conditioning Systems

NATIONAL ENVIRONMENTAL BALANCING BUREAU (NEBB)

NEBB-01 (1991) Procedural Standards for Testing-Adjusting-Balancing of Environmental Systems

NATIONAL FIRE PROTECTION ASSOCIATION (NFPA)

NFPA 90A (1993) Installation of Air Conditioning and Ventilating Systems

SHEET METAL & AIR CONDITIONING CONTRACTORS' NATIONAL ASSOCIATION (SMACNA)

SMACNA-07 (1993) HVAC Systems - Testing, Adjusting and Balancing

1.2 GENERAL REQUIREMENTS: The Contractor shall select AABC MN-1, NEBB-01, SMACNA-07 or ASHRAE 111 as the standard for providing testing, adjusting and balancing of air and water systems. The selected standard shall be used throughout the project. Testing, adjusting, and balancing shall be accomplished by a firm certified for testing and balancing by Associated Air Balance Council (AABC) or National Environmental Balancing Bureau (NEBB). Prior to testing, adjusting, and balancing, the Contractor shall verify that the systems have been installed and are operating as specified. Approved detail drawings and all other data required for each system and/or component to be tested shall be made available at the jobsite during the entire testing, adjusting and balancing effort. The Contractor shall verify that all balancing devices are properly installed to permit testing, adjusting and balancing and that all duct leakage tests have been completed prior to testing, adjusting and balancing. The Contracting Officer shall be notified in writing of all equipment, components, or balancing devices, that are damaged, incorrectly installed, or missing, as well as any design deficiencies that will prevent proper testing, adjusting, and balancing. Testing, adjusting, and balancing shall not commence until approved by the

Contracting Officer. Instrumentation accuracy shall be in accordance with the standard selected in this paragraph. Sound level measuring equipment shall be rated in accordance with ANSI S1.4 and ANSI S1.11.

1.3 INSTRUMENT ACCURACY REQUIREMENTS: All instrumentation shall be checked for accuracy before beginning testing, adjusting and balancing procedures. Instrument accuracy shall be in accordance with the standard selected in paragraph GENERAL REQUIREMENTS. Checks may be carried out against similar equipment maintained specifically for checking purposes or by the manufacturer or a recognized testing facility. All instrumentation used for testing shall be calibrated within 6 months of use. Pitot tubes and U-tube manometers do not require checking. In no case shall the instrumentation accuracy be less than specified by the instrument manufacturer. Any instrument falling out of calibration during the process of balancing and testing shall be recalibrated or removed from the site and replaced by a properly calibrated instrument. No instruments shall be allowed to remain on-site that are not in calibration.

1.4 SUBMITTALS: Government approval is required for submittals with a "GA" designation; submittals having an "FIO" designation are for information only. The following shall be submitted in accordance with Section 01300 SUBMITTAL PROCEDURES:

SD-09 Reports

Testing and Balancing; FIO.

Three copies of a preliminary report, 30 days before balancing commences. The report shall be organized by specific systems and shall clearly identify each item of equipment to be tested, adjusted, and balanced. The appropriate test procedures and measurements to be taken for each item of equipment shall be listed. Instrument calibration records shall be provided on forms shown in AABC MN-1 or SMACNA-07. Manufacturer's specified accuracy shall be shown. The report shall include floor plans showing all measurement locations and types of measurements to be made. All related data necessary for testing, balancing, and adjusting, including fan curves and pump curves, shall be included. A system readiness checklist, similar to that shown in SMACNA-07, shall be included. The report shall contain a listing of the deficiencies of all systems to be tested, adjusted and balanced and the corrective action taken. The report shall contain a schedule for the testing and balancing. Six copies of the final report on forms shown in AABC MN-1 or SMACNA-07, 30 days after completion of the test and balance operation. Data shall be in a hard bound cover identifying the project name, location, date of submittal, name of Contractor, and a general title indicating the specific area and type of work, and shall be signed by a registered professional engineer, employed by the test and balance firm, who has a minimum of 2 years experience in testing, adjusting and balancing work. The final report shall include a summary describing test methods, test results, and major corrective actions taken. The report shall include as-tested floor plans showing all measurement locations and types of measurements made. The air handling unit data shall include a static pressure profile diagram, and pitot tube traverses where possible. The VAV terminal data shall include maximum and minimum air flows, for design and actual conditions, and shall be supported with summaries which show the air outlet totals for each VAV terminal and the VAV terminal totals for each air handling unit. Air distribution data shall include coded drawings which show the exact location of each air outlet. Pump data shall include pump efficiency. Data for chillers, heating and cooling coils, and heat exchangers, shall include heat balance calculations.

All instruments that are recalibrated and brought back onto the jobsite after being found to be out of calibration shall have recalibration records submitted on forms shown in AABC MN-1 or SMACNA-07.

SD-13 Certificates

Qualification; FIO.

Qualification data, 90 days prior to testing and balancing operations. The test and balance firm shall be certified by the Associated Air Balance Council (AABC) or the National Environmental Balancing Bureau (NEBB). The lead balancing technician shall be qualified by AABC or NEBB and his qualification data shall include past experience on at least five similar projects.

PART 2 PRODUCTS (Not Applicable)

PART 3 EXECUTION

3.1 TESTING AND BALANCING

3.1.1 General: The facility shall be essentially complete with final ceiling, walls, windows, doors and partitions in place. Doors and windows surrounding each area to be balanced shall be closed during testing and balancing operations. Air systems shall be complete and operable with balancing dampers, ducting, diffusers, returns, flow control boxes and control components in place. Exhaust fans and fume hoods shall be operational. Hydronic systems shall be complete and operable with balancing valves, flow meters, coils, pumps, piping and control components in place. All measurements and adjustments shall be made using procedures described in standard selected in paragraph GENERAL REQUIREMENTS. Air motion and distribution from air terminals shall be as shown. Smoke tests may be used to demonstrate proper air distribution from air terminals. All data including deficiencies encountered and corrective action taken shall be recorded. If a system cannot be adjusted to meet the design requirements, the Contractor shall promptly notify the Contracting Officer in writing.

3.1.2 Air Systems: Clean filters shall be installed at the beginning of the testing, adjusting, and balancing effort. Each system shall be adjusted until all flow quantities are within plus ten percent and minus zero percent. Dampers shall be checked for tight shutoff. Air leakage around dampers shall be verified. Fire and smoke dampers shall be open. Fans shall be checked for correct direction of rotation and proper speed shall be verified. Fire and smoke dampers shall be tested at system design air flow to ensure proper closure in accordance with NFPA 90A and manufacturer's instructions prior to building occupancy.

3.1.2.1 General Balancing Methods: In addition to the requirements for specific systems, flows in supply, exhaust and return air systems shall be balanced using the methods in standard selected in paragraph GENERAL REQUIREMENTS. Throttling losses shall be limited. Air flow adjustments shall be made by first adjusting the fan speed to meet the design flow conditions. Fan speed adjustment may not be required for fan motors which are less than 746 W, one horsepower, or if throttling results in no greater than an additional 1/3 W horsepower draw above that required if the fan speed were adjusted. Flows and pressures shall be checked in all main risers and supply ducts at all supply, exhaust and return fan discharges. All flows shall be recorded before and after each adjustment.

3.1.2.2 Specific Systems: All special or additional procedures for testing and balancing shall be in accordance with the applicable requirements of the standard selected in paragraph GENERAL REQUIREMENTS. If a system has diversity, only the required quantity of wide open terminals shall be used to meet the design air flow.

3.1.3 Hydronic Systems: All valves and control components shall be open or set as required for maximum system flow. Each system shall be adjusted until all flow quantities are within the tolerances of the standard selected in paragraph GENERAL REQUIREMENTS. Pumps shall be checked for proper speed. Pump activation signal and deactivation signal valves shall be verified. Pump motor current shall be checked at maximum design flow. Variable speed pumping systems shall be tested at a minimum of four separate flow conditions to simulate design diversity.

3.1.3.1 General Balancing Methods: In addition to the requirements for specific systems, flows in piping, coils and other hydronic system components shall be balanced using the flow meter, equipment

pressure drop or pump curve methods in accordance with the applicable provisions of the standard selected in paragraph GENERAL REQUIREMENTS. Flows shall be checked in all main risers and branches and condenser water lines and at all heating and cooling coils, heat exchangers, boilers, chillers, and pump discharges. Pressure taps on all pumps shall be made at factory suction and discharge tappings where available. All flows shall be recorded before and after each adjustment.

3.1.3.2 Specific Systems: Where specific systems require special or additional procedures for testing and balancing, such procedures shall be in accordance with the standard selected in paragraph GENERAL REQUIREMENTS. If a system has diversity, only the required quantity of wide-open terminals shall be used to meet the design water flow.

a. Primary-Secondary: Primary-secondary systems shall be treated as separate systems. Primary systems shall be balanced first with the secondary systems running. Secondary systems shall then be balanced.

b. Summer-Winter: Summer-winter systems shall be balanced in the summer mode of operation. Following completion of the summer-mode balancing, equipment used for winter operation shall be balanced.

3.1.4 Marking of Setting: Following final acceptance of certified reports by the Contracting Officer, the setting of all HVAC adjustment devices including valves, splitters, and dampers shall be permanently marked by the testing and balancing engineer so that adjustment can be restored if disturbed at any time.

3.1.5 Marking of Test Ports: The testing and balancing engineer shall permanently and legibly mark and identify the location points of the duct test ports. If the ductwork has exterior insulation, these markings shall be made on the exterior side of the ductwork insulation. All penetrations through ductwork and ductwork insulation shall be properly sealed to prevent air leakage or loss of vapor barrier.

3.1.6 Sound Level Testing: After the systems are properly tested, adjusted and balanced, sound levels shall be checked in accordance with the applicable provisions of AABC MN-1. Octave-band analysis and noise-criteria curve data shall be recorded on forms shown in AABC MN-1. All occupied areas including offices, corridors, auditorium and meeting rooms, and hospital rooms shall be verified to be within the sound levels shown or as specified. Any areas not meeting the requirements of AABC MN-1 or the specifications or drawings shall be clearly indicated on the form and an explanation of all discrepancies shall be provided in test report.

3.2 CONTROL SYSTEMS: Testing, adjusting, and balancing of the systems shall be coordinated with the control system installation. All control components shall be verified to be properly installed and operating as specified before proceeding with testing, adjusting, and balancing. Verification shall be in accordance with AABC MN-1.

-- End of Section --

INDEX

SECTION 16375

ELECTRICAL DISTRIBUTION SYSTEM, UNDERGROUND

Paragraph		Page
1.1	REFERENCES	16375-1
1.2	GENERAL REQUIREMENTS	16375-3
1.3	SUBMITTALS	16375-3
1.4	DELIVERY, STORAGE AND HANDLING	16375-7
1.5	EXTRA MATERIALS	16375-7
2.1	STANDARD PRODUCT	16375-7
2.2	NAMEPLATES	16375-7
2.3	CORROSION PROTECTION	16375-7
2.4	CABLES	16375-8
2.5	CABLE JOINTS, TERMINATIONS AND CONNECTORS	16375-8
2.6	CONDUIT AND DUCTS	16375-9
2.7	TRANSFORMERS	16375-9
2.8	METERING AND PROTECTIVE DEVICES	16375-10
2.9	SURGE ARRESTERS	16375-10
2.10	GROUNDING AND BONDING	16375-10
2.11	CONCRETE AND REINFORCEMENT	16375-10
2.12	PADLOCKS	16375-11
2.13	CABLE FIREPROOFING SYSTEMS	16375-11
2.14	LIQUID DIELECTRICS	16375-11
2.15	POLE LINE HARDWARE	16375-11
2.16	FACTORY TESTS	16375-12
3.1	GENERAL INSTALLATION REQUIREMENTS	16375-12
3.2	CABLE INSTALLATION	16375-12
3.3	DUCT LINES	16375-13
3.4	PAD-MOUNTED EQUIPMENT INSTALLATION	16375-14
3.5	CONNECTIONS BETWEEN AERIAL AND UNDERGROUND SYSTEMS	16375-15
3.6	CROSSARM MOUNTING	16375-15
3.7	CONNECTIONS TO BUILDINGS	16375-15
3.8	GROUNDING	16375-15
3.9	FIELD TESTING	16375-16
3.10	ACCEPTANCE	16375-18

SECTION 16375

ELECTRICAL DISTRIBUTION SYSTEM, UNDERGROUND

PART 1 GENERAL

1.1 REFERENCES: The publications listed below form a part of this specification to the extent referenced. The publications are referred to in the text by basic designation only.

AMERICAN NATIONAL STANDARDS INSTITUTE (ANSI)

ANSI C2	(1993) National Electrical Safety Code
ANSI C12.1	(1988) Code for Electricity Metering
ANSI C12.4	(1984; R 1990) Mechanical Demand Registers
ANSI C12.10	(1987) Electromechanical Watthour Meters
ANSI C57.12.21	(1980) Requirements for Pad-Mounted Compartmental-Type, Self-Cooled, Single-Phase Distribution Transformers with High-Voltage Bushings; High-Voltage, 34 500 GrdY/19 920 Volts and Below; Low-Voltage, 240/120 Volts; 167 kVA and Smaller
ANSI C57.12.26	(1993) Pad-Mounted Compartmental-Type, Self-Cooled, Three-Phase Distribution Transformers for use with Separable Insulated High-Voltage Connectors, High-Voltage, 34 500 GrdY/19 920 Volts and Below; 2500 kVa and Smaller
ANSI C80.1	(1990) Rigid Steel Conduit - Zinc Coated

AMERICAN SOCIETY FOR TESTING AND MATERIALS (ASTM)

ASTM A 123	(1989a) Zinc (Hot-Dip Galvanized) Coatings on Iron and Steel Products
ASTM A 153	(1982; R 1987) Zinc Coating (Hot-Dip) on Iron and Steel Hardware
ASTM B 8	(1993) Concentric-Lay-Stranded Copper Conductors, Hard, Medium-Hard, or Soft
ASTM B 117	(1994) Operating Salt Spray (Fog) Testing Apparatus
ASTM D 1654	(1992) Evaluation of Painted or Coated Specimens Subjected to Corrosive Environments
ASTM F 883	(1990) Padlocks

ASSOCIATION OF EDISON ILLUMINATING COMPANIES (AEIC)

AEIC CS5	(1994) Specifications for Cross-linked Polyethylene Insulated Shielded Power Cables Rated 5 Through 46 kV

AEIC CS6	(1987; Rev Mar 1989) Ethylene Propylene Rubber Insulated Shielded Power Cables Rated 5 Through 69 kV

FACTORY MUTUAL ENGINEERING AND RESEARCH (FM)

FM P7825	(199; Supple I) Approval Guide

FEDERAL SPECIFICATIONS (FS)

FS HH-I-595	(Rev C) Insulation Tape, Electrical, Pressure-Sensitive Adhesive, Plastic

INSTITUTE OF ELECTRICAL AND ELECTRONICS ENGINEERS (IEEE)

IEEE C57.12.00	(1993) IEEE Standard General Requirements for Liquid-Immersed Distribution, Power, and Regulating Transformers
IEEE C62.1	(1989; R 1994) Surge Arresters for ac Power Circuits
IEEE C62.2	(1987; R 1994) Guide for the Application of Gapped Silicon-Carbide Surge Arresters for Alternating Current Systems
IEEE C62.11	(1993) IEEE Standard Metal-Oxide Surge Arresters for AC Power Circuits
IEEE Std 48	(1990) Standard Test Procedures and Requirements for High-Voltage Alternating-Current Cable Terminations
IEEE Std 81	(1983) Guide for Measuring Earth Resistivity, Ground Impedance, and Earth Surface Potentials of a Ground System (Part1)
IEEE Std 100	(1992) IEEE Standard Dictionary of Electrical and Electronics Terms
IEEE Std 386	(1995) Separable Insulated Connector Systems for Power Distribution Systems Above 600 V
IEEE Std 404	(1993) Cable Joints for Use with Extruded Dielectric Cable Rated 5000 V through 46 000 V and Cable Joints for Use with Laminated Dielectric Cable Rated 2500 V Through 500 000 V
IEEE Std 592	(1990) Exposed Semiconducting Shields on Premolded High Voltage Cable Joints and Separable Insulated Connectors

NATIONAL ELECTRICAL MANUFACTURERS ASSOCIATION (NEMA)

NEMA FB 1	(1993) Fittings, Cast Metal Boxes and Conduit Bodies for Conduit and Cable Assemblies
NEMA LA 1	(1992) Surge Arresters
NEMA SG 2	(1993) High Voltage Fuses
NEMA TC 6	(1990) PVC and ABS Plastic Utilities Duct for Underground Installation
NEMA WC 7	(1993) Cross-Linked-Thermosetting-Polyethylene- Insulated Wire and Cable for the Transmission and Distribution of Electrical Energy

NEMA WC 8 (1993) Ethylene-Propylene-Rubber-Insulated Wire and Cable for the Transmission and Distribution of Electrical Energy

NATIONAL FIRE PROTECTION ASSOCIATION (NFPA)

NFPA 70 (1993) National Electrical Code

UNDERWRITERS LABORATORIES (UL)

UL 6 (1993) Rigid Metal Conduit

UL 467 (1993) Grounding and Bonding Equipment

UL 514A (1991; Rev Apr 1995) Metallic Outlet Boxes

UL 651 (1989; Rev thru Dec 1989) Schedule 40 and 80 Rigid PVC Conduit

1.2 GENERAL REQUIREMENTS

1.2.1 Terminology: Terminology used in this specification is as defined in IEEE Std 100.

1.3 SUBMITTALS: Governmental approval is required for submittals with a "GA" designation; submittals having an "FIO" designation are for information only. The following shall be submitted in accordance with Section 01300 SUBMITTAL PROCEDURES:

SD-01 Data

Manufacturer's Catalog Data; FIO.

Catalog cuts, brochures, circulars, specifications, product data, and printed information in sufficient detail and scope to verify compliance with the requirements of the contract documents.

Material, Equipment, and Fixture Lists; GA.

A complete itemized listing of equipment and materials proposed for incorporation into the work. Each entry shall include an item number, the quantity of items proposed, and the name of the manufacturer of each such item.

Installation Procedures; GA.

As a minimum, installation procedures for transformers, substations, switchgear, and medium-voltage cable terminations and splices.

Procedures shall include cable pulling plans, diagrams, instructions, and precautions required to install, adjust,calibrate, and test the devices and equipment.

SD-04 Drawings

Electrical Distribution System; GA.

Detail drawings consisting of equipment drawings, illustrations, schedules, instructions, diagrams manufacturersstandard installation drawings and other information necessary to define the installation and enable the Government to check conformity with the requirements of the contract drawings.

If departures from the contract drawings are deemed necessary by the Contractor, complete details of such departures shall be included with the detail drawings. Approved departures shall be made at no additional cost to the Government.

Detail drawings shall show how components are assembled, function together and how they will be installed on the project. Data and drawings for component parts of an item or system shall be coordinated and submitted as a unit. Data and drawings shall be coordinated and included in a single submission. Multiple submissions for the same equipment or system are not acceptable except where prior approval has been obtained from the Contracting Officer. In such cases, a list of data to be submitted later shall be included with the first submission. Detail drawings shall consist of the following:

a. Detail drawings showing physical arrangement, construction details, connections, finishes, materials used in fabrication, provisions for conduit or busway entrance, access requirements for installation and maintenance, physical size, electrical characteristics, foundation and support details, and equipment weight. Drawings shall be drawn to scale and/or dimensioned.

b. Internal wiring diagrams of equipment showing wiring as actually provided for this project. External wiring connections shall be clearly identified.

Detail drawings shall as a minimum depict the installation of the following items:

a. Medium-voltage cables and accessories including cable installation plan.

b. Transformers.

c. Pad-mounted loadbreak switches.

d. Surge arresters.

As-Built Drawings; GA.

The as-built drawings shall be a record of the construction as installed. The drawings shall include the information shown on the contract drawings as well as deviations, modifications, and changes from the contract drawings, however minor. The as-built drawings shall be a full sized set of prints marked to reflect deviations, modifications, and changes. The as-built drawings shall be complete and show the location, size, dimensions, part identification, and other information. Additional sheets may be added. The as-built drawings shall be jointly inspected for accuracy and completeness by the Contractor's quality control representative and by the Contracting Officer prior to the submission of each monthly pay estimate. Upon completion of the work, the Contractor shall provide three full sized sets of the marked prints to the Contracting Officer for approval. If upon review, the as-built drawings are found to contain errors and/or omissions, they will be returned to the Contractor for correction. The Contractor shall correct and return the as-built drawings to the Contracting Officer for approval within 10 calendar days from the time the drawings are returned to the Contractor.

SD-09 Reports

Field Testing; GA.

A proposed field test plan, 20 days prior to testing the installed system. No field test shall be performed until the test plan is approved. The test plan shall consist of complete field test procedures including tests to be performed, test equipment required, and tolerance limits.

Test Reports; GA.

Six copies of the information described below in 8-1/2 by 11 inch binders having a minimum of three rings, including a separate section for each test. Sections shall be separated by heavy plastic dividers with tabs.

a. A list of equipment used, with calibration certifications.

b. A copy of measurements taken.

c. The dates of testing.

d. The equipment and values to be verified.

e. The condition specified for the test.

f. The test results, signed and dated.

g. A description of adjustments made.

Cable Installation Reports; GA.

Six copies of the information described below in 8-1/2 by 11 inch binders having a minimum of three rings from which material may readily be removed and replaced, including a separate section for each cable pull. Sections shall be separated by heavy plastic dividers with tabs, with all data sheets signed and dated by the person supervising the pull.

a. Site layout drawing with cable pulls numerically identified.

b. A list of equipment used, with calibration certifications. The manufacturer and quantity of lubricant used on pull.

c. The cable manufacturer and type of cable.

d. The dates of cable pulls, time of day, and ambient temperature.

e. The length of cable pull and calculated cable pulling tensions.

f. The actual cable pulling tensions encountered during pull.

SD-13 Certificates

Materials and Equipment; FIO.

Where materials or equipment are specified to conform to the standards of the Underwriters Laboratories (UL) or to be constructed or tested, or both, in accordance with the standards of the American National Standards Institute (ANSI), the Institute of Electrical and Electronics Engineers (IEEE), or the National Electrical Manufacturers Association (NEMA), the Contractor shall submit proof that the items provided conform to such requirements.

The label of, or listing by, UL will be acceptable as evidence that the items conform. Either a certification or a published catalog specification data statement, to the effect that the item is in accordance with the referenced ANSI or IEEE standard, will be acceptable as evidence that the item conforms. A similar certification or published catalog specification data statement to the effect that the item is in accordance with the referenced NEMA standard, by a company listed as a member company of NEMA, will be

acceptable as evidence that the item conforms. In lieu of such certification or published data, the Contractor may submit a certificate from a recognized testing agency equipped and competent to perform such services, stating that the items have been tested and that they conform to the requirements listed, including methods of testing of the specified agencies. Compliance with above-named requirements does not relieve the Contractor from compliance with any other requirements of the specifications.

Cable Splicer Qualification; FIO.

A certification that contains the names and the qualifications of people recommended to perform the splicing and termination of medium-voltage cables approved for installation under this contract. The certification shall indicate that any person recommended to perform actual splicing and terminations has been adequately trained in the proper techniques and have had at least three recent years of experience in splicing and terminating the same or similar types of cables approved for installation. In addition, any person recommended by the Contractor may be required to perform a practice splice and termination, in the presence of the Contracting Officer, before being approved as a qualified installer of medium-voltage cables. If that additional requirement is imposed, the Contractor shall provide short sections of the approved types of cables along with the approved type of splice and termination kits, and detailed manufacturer's instruction for the proper splicing and termination of the approved cable types.

Cable Installer Qualifications; FIO.

The Contractor shall provide at least one onsite person in a supervisory position with a documentable level of competency and experience to supervise all cable pulling operations. A resume shall be provided showing the cable installers' experience in the last three years, including a list of references complete with points of contact, addresses and telephone numbers.

SD-19 Operation and Maintenance Manuals

Electrical Distribution System; GA.

Six copies of Operation and Maintenance manuals, within 7 calendar days following the completion of tests and including assembly, installation, operation and maintenance instructions, spare parts data which provides supplier name, current cost, catalog order number, and a recommended list of spare parts to be stocked. Manuals shall also include data outlining detailed procedures for system startup and operation, and a troubleshooting guide which lists possible operational problems and corrective action to be taken. A brief description of all equipment, basic operating features, and routine maintenance requirements shall also be included. Documents shall be bound in a binder marked or identified on the spine and front cover. A table of contents page shall be included and marked with pertinent contract information and contents of the manual. Tabs shall be provided to separate different types of documents, such as catalog ordering information, drawings, instructions, and spare parts data. Index sheets shall be provided for each section of the manual when warranted by the quantity of documents included under separate tabs or dividers.

Three additional copies of the instructions manual, within 30 calendar days following the approval of the manuals.

1.4 DELIVERY, STORAGE, AND HANDLING: Devices and equipment shall be visually inspected by the Contractor when received and prior to acceptance from conveyance. Stored items shall be protected from the environment in accordance with the manufacturer's published instructions. Damaged items shall be replaced. Oil filled transformers and switches shall be stored in accordance with the manufacturer's requirements.

1.5 EXTRA MATERIALS: One additional spare fuse or fuse element for each furnished fuse or fuse element shall be delivered to the contracting officer when the electrical system is accepted. Two complete sets of all special tools required for maintenance shall be provided, complete with a suitable tool box.

Special tools are those that only the manufacturer provides, for special purposes (to access compartments, or operate, adjust, or maintain special parts).

PART 2 PRODUCTS

2.1 STANDARD PRODUCT: Material and equipment shall be the standard product of a manufacturer regularly engaged in the manufacture of the product and shall essentially duplicate items that have been in satisfactory use for at least 2 years prior to bid opening. Items of the same classification shall be identical including equipment, assemblies, parts, and components.

2.2 NAMEPLATES

2.2.1 General: Each major component of this specification shall have the manufacturer's name, address, type or style, model or serial number, and catalog number on a nameplate securely attached to the equipment. Nameplates shall be made of noncorrosive metal. Equipment containing liquid dielectrics shall have the type of dielectric on the nameplate. Sectionalizer switch nameplates shall have a schematic with all switch positions shown and labeled. As a minimum, nameplates shall be provided for transformers, circuit breakers, meters, switches, and switchgear.

2.2.2 Liquid-Filled Transformer Nameplates: Nameplates shall indicate percent impedance, voltage, kVA, frequency, number of phases, cooling class, insulation class, temperature rise, the number of litersgallons and composition of liquid-dielectric, and shall be permanently marked with a statement that the dielectric supplied is non-polychlorinated biphenyl. If transformer nameplate is not so marked, the Contractor shall furnish manufacturer's certification for each transformer that the dielectric is non-PCB classified, with less than 50 ppm PCB content in accordance with paragraph LIQUID DIELECTRICS. Certifications shall be related to serial numbers on transformer nameplates. Transformer dielectric exceeding the 50 ppm PCB content or transformers without certification will be considered as PCB insulated and will not be accepted.

2.3 CORROSION PROTECTION

2.3.1 Aluminum Materials: Aluminum shall not be used.

2.3.2 Ferrous Metal Materials

2.3.2.1 Hardware: Ferrous metal hardware shall be hot-dip galvanized in accordance with ASTM A 153 and ASTM A 123.

2.3.2.2 Equipment: Equipment and component items, including but not limited to transformer stations and ferrous metal luminaries not hot-dip galvanized or porcelain enamel finished, shall be provided with corrosion-resistant finishes which shall withstand 120 hours of exposure to the salt spray test specified in ASTM B 117 without loss of paint or release of adhesion of the paint primer coat to the metal surface in excess of 1/16 inch from the test mark. The scribed test mark and test evaluation shall be in accordance with ASTM D 1654 with a rating of not less than 7 in accordance with TABLE 1, (procedure A). Cut edges or otherwise damaged surfaces of hot-dip galvanized sheet steel or mill galvanized sheet steel shall be coated with a zinc rich paint conforming to the manufacturer's standard.

2.3.3 Finishing: Painting required for surfaces not otherwise specified and finish painting of items only primed at the factory shall be as specified in Section 09900 PAINTING, GENERAL.

2.4 CABLES: Cables shall be single conductor type unless otherwise indicated.

2.4.1 Conductor Material: Underground cables shall be of soft drawn copper conductor material.

2.4.2 Medium-Voltage Cables

2.4.2.1 General: Medium voltage cables shall conform to the requirements of NEMA WC 8 for cables utilizing ethylene-propylene-rubber (EPR) insulation. Cables shall be in accordance with the requirements of NFPA 70.

2.4.2.2 Insulation: Cables shall utilize ethylene-propylene-rubber (EPR) insulation. Cables shall be provided with 133 percent insulation level.

2.4.2.3 Jackets: Cables shall be provided with a nonmetallic jacket. Concentric neutral cables for direct buried applications shall have a moisture-resistant, nonmetallic jacket rated for direct burial.

2.4.2.4 Neutrals: Neutral conductors of grounded neutral systems except for concentric neutral cables shall be of the same insulation material as phase conductors, except that a 600-volt insulation rating is acceptable. Cables employing a concentric neutral shall have full concentric neutral with an insulating jacket over the concentric neutral.

2.4.2.5 Shielding: Cables rated for above 2 kV shall have both conductor and insulation shielding for each phase.

2.4.2.6 Ratings: Medium-voltage cables shall be rated for a circuit voltage of 15 kV.

2.4.3 Low-Voltage Cables: Cables shall be rated 600 volts, THWN.

2.5 CABLE JOINTS, TERMINATIONS, AND CONNECTORS

2.5.1 Medium-Voltage Separable Insulated Connectors: Separable insulated connectors shall comply with IEEE Std 386 and IEEE Std 592 and shall be of suitable construction or standard splice kits shall be used. Separable insulated connectors are acceptable for voltages up to 35 kV. Connectors shall be of the loadbreak type as indicated, of suitable construction for the application and the type of cable connected, and shall include cable shield adaptors. Separable insulated connectors shall not be used as substitutes for conventional permanent splices. External clamping points and test points shall be provided.

2.5.2 Terminations: Terminations shall be in accordance with IEEE Std 48, Class 1 or Class 2; of the molded elastomer, wet-process porcelain, prestretched elastomer, heat-shrinkable elastomer, or taped type. Acceptable elastomers are track-resistant silicone rubber or track-resistant ethylene propylene compounds, such as ethylene propylene rubber or ethylene propylene diene monomer. Separable insulated connectors may be used for apparatus terminations, when such apparatus is provided with suitable bushings. Terminations shall be of the outdoor type, except that where installed inside outdoor equipment housings which are sealed against normal infiltration of moisture and outside air, indoor, Class 2 terminations are acceptable. Class 3 terminations are not acceptable. Terminations, where required, shall be provided with mounting brackets suitable for the intended installation and with grounding provisions for the cable shielding, metallic sheath, and armor.

2.5.2.1 Factory Preformed Type: Molded elastomer, wet-process porcelain, prestretched, and heat-shrinkable terminations shall utilize factory preformed components to the maximum extent practicable rather than tape build-up. Terminations shall have basic impulse levels as required for the system voltage level. Leakage distances shall comply with wet withstand voltage test requirements of IEEE Std 48 for the next higher Basic Insulation Level (BIL) level.

2.6 CONDUIT AND DUCTS: Duct lines shall be concrete-encased, thin-wall type.

2.6.1 Metallic Conduit: Rigid galvanized steel conduit shall comply with UL 6 and ANSI C80.1. Metallic conduit fittings and outlets shall comply with UL 514A and NEMA FB 1.

2.6.2.1 Concrete Encased Ducts: UL 651 Schedule 40 or NEMA TC 6 Type EB.

2.6.3 Conduit Sealing Compound: Compounds for sealing ducts and conduit shall have a putty-like consistency workable with the hands at temperatures as low as 35 degrees F, shall neither slump at a temperature of 300 degrees F, nor harden materially when exposed to the air. Compounds shall adhere to clean surfaces of fiber or plastic ducts; metallic conduits or conduit coatings; concrete, masonry, or lead; any cable sheaths, jackets, covers, or insulation materials; and the common metals. Compounds shall form a seal without dissolving, noticeably changing characteristics, or removing any of the ingredients. Compounds shall have no injurious effect upon the hands of workmen or upon materials.

2.7 TRANSFORMERS: Transformers shall be of the outdoor type having the ratings and arrangements indicated. Medium-voltage ratings of cable terminations shall be 15 kV between phases for 133 percent insulation level.

2.7.1 Pad-Mounted Transformers: Pad-mounted transformers shall comply with ANSI C57.12.26 and shall be of the radial type. Pad-mounted transformer stations shall be assembled and coordinated by one manufacturer and each transformer station shall be shipped as a complete unit so that field installation requirements are limited to mounting each unit on a concrete pad and connecting it to primary and secondary lines. Stainless steel pins and hinges shall be provided. Barriers shall be provided between high- and low-voltage compartments. High-voltage compartment doors shall be interlocked with low-voltage compartment doors to prevent access to any high-voltage section unless its associated low-voltage section door has first been opened. Compartments shall be sized to meet the specific dimensional requirements of ANSI C57.12.26. Pentahead locking bolts shall be provided with provisions for a padlock.

2.7.1.1 High-Voltage Compartments: High-voltage compartments shall be dead-front construction. Primary protection shall include loadbreak switching, drawout dry-well-mounted current-limiting fuses, and medium-voltage separable connectors, and surge arresters. Switches shall be of the group-operated type. Switches may be mounted inside transformer tanks with switch operating handles located in high-voltage compartments and equipped with metal loops for hook stick operation. Fuses shall be interlocked with switches so that fuses can be removed only when the associated switch is in the "OFF" position. Adjacent to medium-voltage cable connections, a nameplate or equivalent stencilled inscription shall be provided inscribed "DO NOT OPEN CABLE CONNECTORS UNLESS SWITCH IS OFF." Adjacent to switches, nameplates shall identify switch operating handles and "ON" and "OFF" positions. Surge arresters shall be fully insulated and configured to terminate on the same bushing as the primary cable by means of a loadbreak, feed-through bushing insert.

2.7.1.2 Transformer Tank Sections: Transformers shall comply with IEEE C57.12.00, ANSI C57.12.21, and ANSI C57.12.26 and shall be of the mineral oil-insulated type. Transformers shall be suitable for outdoor use and shall have 2 separate windings per phase. Standard NEMA primary taps shall be provided. Where primary taps are not specified, 4, 2-1/2 percent rated kVA high-voltage taps shall be provided 2 above and 2 below rated, primary voltage. Operating handles for primary tap changers for de-energized operation shall be located within high-voltage compartments, externally to transformer tanks. Adjacent to the tap changer operating handle, a nameplate or equivalent stenciled inscription shall be provided and inscribed "DO NOT OPERATE UNDER LOAD." Transformer ratings at 60 Hz shall be as follows:

Single-phase capacity	37.5 kVA
Impedance	5.75 percent nominal
Temperature rise	65 degrees C
High-voltage winding	12,470 volts
Low-voltage winding	120/240 volts

2.7.1.3 Low-Voltage Cable Compartments: Neutrals shall be provided with fully-insulated bushings. Clamp type cable terminations, suitable for copper conductors entering from below, shall be provided as necessary.

2.7.1.4 Accessories: High-voltage warning signs shall be permanently attached to each side of transformer stations. Voltage warning signs shall comply with ANSI C2. Copper-faced steel or stainless steel ground connection pads shall be provided in both the high- and low-voltage compartments. Dial-type thermometer, liquid-level gauge, and drain valve with built-in sampling device shall be provided for each transformer station. Insulated-bushing-type parking stands shall be provided adjacent to each separable load-break elbow to provide for cable isolation during sectionalizing operations.

2.8 METERING AND PROTECTIVE DEVICES

2.8.1 Fuses, Medium-Voltage, Including Current-Limiting: Medium-voltage fuses, including current-limiting, shall comply with NEMA SG 2.

2.8.2 Watthour Meters: Watthour meters shall comply with ANSI C12.1 and ANSI C12.10, except that numbered terminal wiring sequence and case size may be the manufacturer's standard. Watthour meters shall be of the drawout switchboard type having a 15 minute, cumulative form, demand register meeting ANSI C12.4 and provided with not less than 2-1/2 stators. Watthour demand meters shall have factory-installed electronic pulse initiators meeting the requirements of ANSI C12.1. Pulse initiators shall be solid-state devices incorporating light-emitting diodes, phototransistors, and power transistors, except that mercury-wetted output contacts are acceptable. Initiators shall be totally contained within watthour demand meter enclosures. They shall be capable of operating at speeds up to 500 pulses per minute with no false pulses, and they shall be factory calibrated with no field adjustments being required. Initiators shall be calibrated for a pulse rate output of 1 pulse per 1/4 disc revolution of the associated meter and shall be compatible with the indicated equipment.

2.9 SURGE ARRESTERS: Surge arresters shall comply with NEMA LA 1, IEEE C62.1, IEEE C62.2, and IEEE C62.11 and shall be provided where indicated. Arresters shall be distribution class, rated as shown. Arresters shall be equipped with mounting brackets suitable for the indicated installations. Arresters shall be of the metal-oxide varistor type.

2.10 GROUNDING AND BONDING:

2.10.1 Driven Ground Rods: Ground rods shall be copper-clad steel conforming to UL 467 not less than 3/4 inch in diameter by 10 feet in length. Sectional type rods may be used.

2.10.2 Grounding Conductors: Grounding conductors shall be bare, except where installed in conduit with associated phase conductors. Insulated conductors shall be of the same material as phase conductors and green color-coded, except that conductors shall be rated no more than 600 volts. Bare conductors shall be ASTM B 8 soft-drawn unless otherwise indicated. Aluminum is not acceptable.

2.11 CONCRETE AND REINFORCEMENT: Concrete shall be a minimum of 2500 psi at 28 days. All other requirements shall be as specified in Section 03300 CONCRETE FOR BUILDING CONSTRUCTION.

2.12 PADLOCKS: Padlocks shall conform to ASTM F 883.

2.13 CABLE FIREPROOFING SYSTEMS: Cable fireproofing systems shall be listed in FM P7825 as a fire-protective coating or tape approved for grouped electrical conductors and shall be suitable for application on the type of medium-voltage cables provided. After being fully cured, materials shall be suitable for use where exposed to oil, water, gases, salt water, sewage, and fungus and shall not damage cable jackets or insulation. Asbestos materials are not acceptable.

2.13.1 Fireproof Coating: Cable fireproofing coatings shall be compounded of water-based thermoplastic resins, flame-retardant chemicals, and inorganic noncombustible fibers and shall be suitable for the application methods used. Coatings applied on bundled cables shall have a derating factor of less than 5 percent, and a dielectric strength of 95 volts per mil minimum after curing.

2.13.2 Fireproofing Tape: Fireproofing tape shall be at least 2 inches wide and shall be a flexible, conformable, polymeric, elastomer tape designed specifically for fireproofing cables.

2.13.3 Plastic Tape: Preapplication plastic tape shall be pressure sensitive, 10 mil thick, conforming to FS HH-I-595.

2.14 LIQUID DIELECTRICS: Liquid dielectrics for transformers, capacitors, reclosers, and other liquid-filled electrical equipment shall be non-polychlorinated biphenyl (PCB) mineral-oil. Nonflammable fluids shall not be used. Tetrachloroethylene (perchloroethylene) and 1, 2, 4 trichlorobenzene fluids shall not be used.

2.15 POLE LINE HARDWARE: Zinc-coated hardware shall comply with ANSI C135.1, ANSI C135.2, ANSI C135.4, ANSI C135.14, ANSI C135.17, ANSI C135.22, and ANSI C135.33. Steel hardware shall comply with ASTM A 575 and ASTM A 576. Hardware shall be hot-dip galvanized in accordance with ASTM A 153. Pole-line hardware shall be hot-dip galvanized steel. Washers shall be installed under boltheads and nuts on wood surfaces and elsewhere as required. Washers used on through-bolts and double-arming bolts shall be approximately 2-1/4 inches square and 3/16 inch thick. The diameter of holes in washers shall be the correct standard size for the bolt on which a washer is used. Washers for use under heads of carriage-bolts shall be of the proper size to fit over square shanks of bolts. Eye bolts, bolt eyes, eyenuts, strain-load plates, lag screws, guy clamps, fasteners, hooks, shims, and clevises shall be used wherever required to support and to protect poles, brackets, crossarms, guy wires, and insulators.

2.15.1 Crossarms: Crossarms shall comply with REA Bulletin 1728H-701 and shall be solid wood, distribution type, except cross-sectional area with pressure treatment conforming to AWPA C25, and a 1/4 inch, 45 degree chamfer on all top edges. Cross-sectional area minimum dimensions shall be 4-1/4 inches in height by 3-l/4 inches in depth in accordance with ANSI C2 for Grade B construction. Crossarms shall be 8 feet in length, except that 10 footcrossarms shall be used for crossarm-mounted banked single-phase transformers or elsewhere as indicated. Crossarms shall be machined, chamfered, trimmed, and bored for stud and bolt holes before pressure treatment. Factory drilling shall be provided for pole and brace mounting, for four pin or four vertical line-post insulators, and for four suspension insulators, except where otherwise indicated or required. Drilling shall provide required climbing space and wire clearances. Crossarms shall be straight and free of twists to within 1/10 inch per foot of length. Bend or twist shall be in one direction only.

2.15.2 Fused Cutouts: Medium-voltage fuses and cutouts shall comply with NEMA SG 2 and shall be of the loadbreak enclosed type construction rated 15 kV and of the normal-duty type. Open-link cut-outs are not acceptable. Fuses shall be either indicating or dropout type. Fuse ratings shall be as indicated. Fuse cutouts shall be equipped with mounting brackets suitable for the indicated installations.

2.15.3 Surge Arresters: Surge arresters shall comply with NEMA LA 1 and IEEE C62.1, IEEE C62.2, and IEEE C62.11, and shall be provided for protection of aerial-to-underground transitions, automatic circuit reclosers, capacitor equipment, group-operated load-interrupter switches, transformers and other indicated equipment. Arresters shall be distribution class, rated as shown. Arresters shall be equipped with mounting brackets suitable for the indicated installations. Arresters shall be of the metal-oxide varistor type suitable for outdoor installations.

2.16 FACTORY TESTS: Factory tests shall be performed, as follows, in accordance with the applicable publications and with other requirements of these specifications. The Contracting Officer shall be notified

at least 10 days before the equipment is ready for testing. The Contracting Officer reserves the right to witness the tests.

a. Transformers: Manufacturer's standard routine tests in accordance with IEEE C57.12.00.

b. Factory Preformed Terminations: Wet withstand voltage tests in accordance with IEEE Std 48 for the next higher BIL level.

PART 3 EXECUTION

3.1 GENERAL INSTALLATION REQUIREMENTS: Equipment and devices shall be installed and energized in accordance with the manufacturer's published instructions. Circuits installed aerially shall conform to the requirements of Section 16370 ELECTRICAL DISTRIBUTION SYSTEM, AERIAL. Steel conduits installed underground shall be installed and protected from corrosion in conformance with the requirements of Section 16415 ELECTRICAL WORK, INTERIOR. Except as covered herein, excavation, trenching, and backfilling shall conform to the requirements of Section 02222 EXCAVATION, TRENCHING, AND BACKFILLING FOR UTILITIES SYSTEMS. Concrete work shall conform to the requirements of Section 03300A CONCRETE FOR BUILDING CONSTRUCTION.

3.1.1 Conformance to Codes: The installation shall comply with the requirements and recommendations of NFPA 70 and ANSI C2 as applicable.

3.1.2 Verification of Dimensions: The Contractor shall become familiar with details of the work, shall verify dimensions in the field, and shall advise the Contracting Officer of any discrepancy before performing any work.

3.2 CABLE INSTALLATION: The Contractor shall obtain from the manufacturer an installation manual or set of instructions which addresses such aspects as cable construction, insulation type, cable diameter, bending radius, cable temperature, lubricants, coefficient of friction, conduit cleaning, storage procedures, moisture seals, testing for and purging moisture, etc. The Contractor shall then perform pulling calculations and prepare a pulling plan which shall be submitted along with the manufacturers instructions in accordance with SUBMITTALS.

3.2.1 Cable Installation Plan and Procedure: Cable shall be installed strictly in accordance with the cable manufacturer's recommendations. Each circuit shall be identified by means of a fiber, laminated plastic, or non-ferrous metal tags, or approved equal, in each junction box, and each terminal. Each tag shall contain the following information; cable type, conductor size, circuit number, circuit voltage, cable destination and phase identification.

3.2.1.1 Cable Inspection: The cable reel shall be inspected for correct storage positions, signs of physical damage, and broken end seals. If end seal is broken, moisture shall be removed from cable in accordance with the cable manufacturer's recommendations.

3.2.1.2 Duct Cleaning: Duct shall be cleaned with an assembly that consists of a flexible mandrel (manufacturers standard product in lengths recommended for the specific size and type of duct) that is 1/4 inch less than inside diameter of duct, 2 wire brushes, and a rag. The cleaning assembly shall be pulled through conduit a minimum of 2 times or until less than a volume of 8 cubic inches of debris is expelled from the duct.

3.2.1.3 Duct Lubrication: The cable lubricant shall be compatible with the cable jacket for cable that is being installed. Application of lubricant shall be in accordance with lubricant manufacturer's recommendations.

3.2.1.4 Cable Installation: The Contractor shall provide a cable feeding truck and a cable pulling winch as required. The Contractor shall provide a pulling grip or pulling eye in accordance with cable manufacturer's recommendations. The pulling grip or pulling eye apparatus shall be attached to polypropylene or manilla rope followed by lubricant front end packs and then by power cables. A dynamometer shall be used to monitor pulling tension. Pulling tension shall not exceed cable manufacturer's recommendations. The Contractor shall not allow cables to cross over while cables are being fed into duct. For cable installation in cold weather, cables shall be kept at 50 degrees F temperature for at least 24 hours before installation.

3.2.1.5 Cable Installation Plan: The Contractor shall submit a cable installation plan for all cable pulls in accordance with the detail drawings portion of paragraph SUBMITTALS. Cable installation plan shall include:

a. Site layout drawing with cable pulls identified in numeric order of expected pulling sequence and direction of cable pull.

b. List of cable installation equipment.

c. Lubricant manufacturer's application instructions.

d. Procedure for resealing cable ends to prevent moisture from entering cable.

e. Cable pulling tension calculations of all cable pulls.

f. Cable percentage conduit fill.

g. Cable sidewall thrust pressure.

h. Cable minimum bend radius and minimum diameter of pulling wheels used.

i. Cable jam ratio.

j. Maximum allowable pulling tension on each different type and size of conductor.

k. Maximum allowable pulling tension on pulling device.

3.2.2 Duct Line: Cables shall be installed in duct lines where indicated. Neutral and grounding conductors shall be installed in the same duct with their associated phase conductors.

3.3 DUCT LINES

3.3.1 Requirements: Numbers and sizes of ducts shall be as indicated. Duct lines shall be laid with a minimum slope of 4 inches per 100 feet. Depending on the contour of the finished grade, the high-point may be at a terminal, a manhole, a handhole, or between manholes or handholes. Short-radius manufactured 90-degree duct bends may be used only for pole or equipment risers, unless specifically indicated as acceptable. The minimum manufactured bend radius shall be 18 inches for ducts of less than 3 inch diameter, and 36 inches for ducts 3 inches or greater in diameter. Otherwise, long sweep bends having a minimum radius of 25 feet shall be used for a change of direction of more than 5 degrees, either horizontally or vertically. Both curved and straight sections may be used to form long sweep bends, but the maximum curve used shall be 30 degrees and manufactured bends shall be used. Ducts shall be provided with end bells whenever duct lines terminate in manholes or handholes.

3.3.2 Treatment: Ducts shall be kept clean of concrete, dirt, or foreign substances during construction. Field cuts requiring tapers shall be made with proper tools and match factory tapers. A coupling

recommended by the duct manufacturer shall be used whenever an existing duct is connected to a duct of different material or shape. Ducts shall be stored to avoid warping and deterioration with ends sufficiently plugged to prevent entry of any water or solid substances. Ducts shall be thoroughly cleaned before being laid. Plastic ducts shall be stored on a flat surface and protected from the direct rays of the sun.

3.3.3 Concrete Encasement: Ducts requiring concrete encasements shall comply with NFPA 70. The separation between adjacent electric power and communication ducts shall conform to ANSI C2. Duct line encasements shall be monolithic construction. Where a connection is made to a previously poured encasement, the new encasement shall be well bonded or doweled to the existing encasement. The Contractor shall submit proposed bonding method for approval in accordance with the detail drawing portion of paragraph SUBMITTALS. Where ducts are jacked under existing pavement, rigid steel conduit will be installed because of its strength. To protect the corrosion-resistant conduit coating, predrilling or installing conduit inside a larger iron pipe sleeve (jack-and-sleeve) is required.

3.3.4 Installation of Couplings: Joints in each type of duct shall be made up in accordance with the manufacturer's recommendations for the particular type of duct and coupling selected and as approved.

3.3.4.1 Plastic Duct: Duct joints shall be made by brushing a plastic solvent cement on insides of plastic coupling fittings and on outsides of duct ends. Each duct and fitting shall then be slipped together with a quick 1/4-turn twist to set the joint tightly.

3.3.5 Duct Line Markers: Duct line markers shall be provided at the ends of long duct line stubouts or for other ducts whose locations are indeterminate because of duct curvature or terminations at completely below-grade structures. In addition to markers, a 5 mil brightly colored plastic tape, not less than 3 inches in width and suitably inscribed at not more than 10 feet on centers with a continuous metallic backing and a corrosion-resistant 1 mil metallic foil core to permit easy location of the duct line, shall be placed approximately 12 inches below finished grade levels of such lines.

3.4 PAD-MOUNTED EQUIPMENT INSTALLATION: Pad-mounted equipment, shall be installed on concrete pads in accordance with the manufacturer's published, standard installation drawings and procedures, except that they shall be modified to meet the requirements of this document. Units shall be installed so that they do not damage equipment or scratch painted or coated surfaces. After installation, surfaces shall be inspected and scratches touched up with a paint or coating provided by the manufacturer especially for this purpose.

3.4.1 Concrete Pads:

3.4.1.1 Construction: Concrete pads for pad-mounted electrical equipment may be either pre-fabricated or shall be poured-in-place. Pads shall be constructed as indicated, except that exact pad dimensions and mounting details are equipment specific and are the responsibility of the Contractor. Tops of concrete pads shall be level and shall project 4 inches above finished paving or grade and sloped to drain. Edges of concrete pads shall have 3/4 inch chamfer. Conduits for primary, secondary, and grounding conductors shall be set in place prior to placement of concrete pads. Where grounding electrode conductors are installed through concrete pads, PVC conduit sleeves shall be installed through the concrete to provide physical protection. To facilitate cable installation and termination, the concrete pad shall be provided with a rectangular hole below the primary and secondary compartments, sized in accordance with the manufacturer's recommended dimensions. Upon completion of equipment installation the rectangular hole shall be filled with masonry grout.

3.4.1.2 Concrete and Reinforcement: Concrete work shall comply with the requirements of Section 03300 CONCRETE FOR BUILDING CONSTRUCTION. Concrete pad reinforcement shall be in accordance with Section 03200 CONCRETE REINFORCEMENT.

3.4.1.3 Sealing: When the installation is complete, the Contractor shall seal all conduit and other entries into the equipment enclosure with an approved sealing compound. Seals shall be of sufficient strength and durability to protect all energized live parts of the equipment from rodents, insects, or other foreign matter.

3.5 CONNECTIONS BETWEEN AERIAL AND UNDERGROUND SYSTEMS: Underground cables shall be extended up poles in conduit to cable terminations. Conduits shall be secured to the poles by 2-hole galvanized steel pipe straps spaced not more than 10 feet apart and with 1 strap not more than 12 inches from any bend or termination. Cable guards shall be secured to poles in accordance with the manufacturer's published procedures. Conduits shall be equipped with bushings to protect cables and minimize water entry. Capnut potheads shall be used to terminate medium-voltage multiple-conductor cable. Cables shall be supported by devices separate from the conduit or guard, near their point of exit from the conduit or guard.

3.6 CROSSARM MOUNTING: Crossarms shall be bolted to poles with 5/8 inch through-bolts with square washers at each end. Bolts shall extend not less than 1/8 inch nor more than 2 inches beyond nuts. On single crossarm construction, the bolt head shall be installed on the crossarm side of the pole. Wood crossarm braces shall be provided on crossarms. Flat braces may be provided for 8 foot crossarms and shall be 1/4 by 1-1/4 inches, not less than 28 inches in length. Flat braces shall be bolted to arms with 3/8 inch carriage bolts with round or square washers between boltheads and crossarms, and secured to poles with 1/2 by 4 inch lag screws after crossarms are leveled and aligned. Angle braces are required for 10 foot crossarms and shall be 60 inch span by 18 inch drop formed in one piece from 1-1/2 by 1-1/2 by 3/16 inch angle. Angle braces shall be bolted to crossarms with 1/2 inch bolts with round or square washers between boltheads and crossarms, and secured to poles with 5/8 inch through-bolts. Double crossarms shall be securely held in position by means of 5/8 inch double-arming bolts. Each double-arming bolt shall be equipped with four nuts and four square washers.

3.7 CONNECTIONS TO BUILDINGS: Cables shall be extended into the building as indicated, and shall be connected to the first applicable termination point in each building. Interfacing with building interior conduit systems shall be at conduit stubouts terminating 5 feet outside of a building and 2 feet below finished grade as specified and provided under Section 16415 ELECTRICAL WORK, INTERIOR. After installation of cables, conduits shall be sealed with caulking compound to prevent entrance of moisture or gases into buildings.

3.8 GROUNDING: A ground ring consisting of the indicated configuration of bare copper conductors and driven ground rods shall be installed around pad-mounted equipment as shown. Equipment frames of metal-enclosed equipment, and other noncurrent-carrying metal parts, such as cable shields, cable sheaths and armor, and metallic conduit shall be grounded. At least 2 connections shall be provided from a transformer to the ground RING. Metallic frames and covers of handholes and pull boxes shall be grounded by use of a braided, copper ground strap with equivalent ampacity of No. 6 AWG.

3.8.1 Grounding Electrodes: Grounding electrodes shall be installed as shown on the drawings and as follows:

a. Driven rod electrodes - Unless otherwise indicated, ground rods shall be driven into the earth until the tops of the rods are approximately 1 foot below finished grade.

b. Ground ring - A ground ring shall be installed as shown consisting of bare copper conductors installed 24 inches, plus or minus 3 inches, below finished top of soil grade. Ground ring conductors shall be sized as shown.

3.8.2 Grounding and Bonding Connections: Connections above grade shall be made by the fusion-welding process or with bolted solderless connectors, in compliance with UL 467, and those below grade shall be made by a fusion-welding process.

3.8.3 Grounding and Bonding Conductors: Grounding and bonding conductors include conductors used to bond transformer enclosures and equipment frames to the grounding electrode system. Grounding and bonding conductors shall be sized as shown, and located to provide maximum physical protection. Bends greater than 45 degrees in ground conductors are not permitted. Routing of ground conductors through concrete shall be avoided. When concrete penetration is necessary, nonmetallic conduit shall be cast flush with the points of concrete entrance and exit so as to provide an opening for the ground conductor, and the opening shall be sealed with a suitable compound after installation.

3.8.4 Surge Arrester Grounding: Surge arresters and neutrals shall be bonded directly to the transformer enclosure and then to the grounding electrode system with a bare copper conductor, sized as shown. Lead lengths shall be kept as short as practicable with no kinks or sharp bends.

3.8.5 Riser Pole Grounding: A single continuous vertical grounding electrode conductor shall be installed on each riser pole and connected directly to the grounding electrodes indicated on the drawings or required by these specifications. All equipment, neutrals, surge arresters, and items required to be grounded shall be connected directly to this vertical conductor. The grounding electrode conductor shall be sized as shown. Grounding electrode conductors shall be stapled to wood poles at intervals not exceeding 600 mm (2 feet).

3.9 FIELD TESTING

3.9.1 General: Field testing shall be performed in the presence of the Contracting Officer. The Contractor shall notify the Contracting Officer 10 days prior to conducting tests. The Contractor shall furnish all materials, labor, and equipment necessary to conduct field tests. The Contractor shall perform all tests and inspections recommended by the manufacturer unless specifically waived by the Contracting Officer. The Contractor shall maintain a written record of all tests which includes date, test performed, personnel involved, devices tested, serial number and name of test equipment, and test results. Field test reports shall be signed and dated by the Contractor.

3.9.2 Safety: The Contractor shall provide and use safety devices such as rubber gloves, protective barriers, and danger signs to protect and warn personnel in the test vicinity. The Contractor shall replace any devices or equipment which are damaged due to improper test procedures or handling.

3.9.3 Ground-Resistance Tests: The resistance of each grounding electrode system shall be measured using the fall-of-potential method defined in IEEE Std 81. Ground resistance measurements shall be made before the electrical distribution system is energized and shall be made in normally dry conditions not less than 48 hours after the last rainfall. Resistance measurements of separate grounding electrode systems shall be made before the systems are bonded together below grade. The combined resistance of separate systems may be used to meet the required resistance, but the specified number of electrodes must still be provided.

a. Single rod electrode - 25 ohms.

b. Multiple rod electrodes - 5 ohms.

3.9.4 Medium-Voltage Cable Test: After installation and before the operating test or connection to an existing system, the medium-voltage cable system shall be given a high potential test. Direct-current voltage shall be applied on each phase conductor of the system by connecting conductors as one terminal and connecting grounds or metallic shieldings or sheaths of the cable as the other terminal for each test. Prior to making the test, the cables shall be isolated by opening applicable protective devices and disconnecting equipment. The test shall be conducted with all splices, connectors, and terminations in place. The method, voltage, length of time, and other characteristics of the test for initial installation shall be in accordance with NEMA WC 7 or NEMA WC 8 for the particular type of cable installed, except

that 28 kV and 35 kV insulation test voltages shall be in accordance with either AEIC CS5 or AEIC CS6 as applicable, and shall not exceed the recommendations of IEEE Std 404 for cable joints and IEEE Std 48 for cable terminations unless the cable and accessory manufacturers indicate higher voltages are acceptable for testing. Should any cable fail due to a weakness of conductor insulation or due to defects or injuries incidental to the installation or because of improper installation of cable, cable joints, terminations, or other connections, the Contractor shall make necessary repairs or replace cables as directed. Repaired or replaced cables shall be retested.

3.9.5 Low-Voltage Cable Test: Low-voltage cable, complete with splices, shall be tested for insulation resistance after the cables are installed, in their final configuration, ready for connection to the equipment, and prior to energization. The test voltage shall be 500 volts dc, applied for one minute between each conductor and ground and between all possible combinations conductors in the same trench, duct, or cable, with all other conductors in the same trench, duct, or conduit. The minimum value of insulation shall be:

$$R \text{ in megohms} = \frac{(\text{rated voltage in kV} + 1) \times 304.8}{(\text{length of cable in meters})}$$

$$R \text{ in megohms} = \frac{(\text{rated voltage in kV} + 1) \times 1000}{(\text{length of cable in feet})}$$

Each cable failing this test shall be repaired or replaced. The repaired cable shall be retested until failures have been eliminated.

3.9.6 Pre-Energization Services: Calibration, testing, adjustment, and placing into service of the installation shall be accomplished by a manufacturer's product field service engineer or independent testing company with a minimum of 2 years of current product experience. The following services shall be performed on the equipment listed below. These services shall be performed subsequent to testing but prior to the initial energization. The equipment shall be inspected to ensure that installation is in compliance with the recommendations of the manufacturer and as shown on the detail drawings. Terminations of conductors at major equipment shall be inspected to ensure the adequacy of connections. Bare and insulated conductors between such terminations shall be inspected to detect possible damage during installation. If factory tests were not performed on completed assemblies, tests shall be performed after the installation of completed assemblies. Components shall be inspected for damage caused during installation or shipment to ensure packaging materials have been removed. Components capable of being both manually and electrically operated shall be operated manually prior to the first electrical operation. Components capable of being calibrated, adjusted, and tested shall be calibrated, adjusted, and tested in accordance with the instructions of the equipment manufacturer. Items for which such services shall be provided, but are not limited to, are the following:

a. Pad-mounted transformers

b. Panelboards

3.9.7 Operating Tests: After the installation is completed, and at such times as the Contracting Officer may direct, the Contractor shall conduct operating tests for approval. The equipment shall be demonstrated to operate in accordance with the requirements herein. An operating test report shall be submitted in accordance with paragraph SUBMITTALS.

3.10 ACCEPTANCE: Final acceptance of the facility will not be given until the Contractor has successfully completed all tests and after all defects in installation, material or operation have been corrected.

-- End of Section --

INDEX

SECTION 16415

ELECTRICAL WORK, INTERIOR

Paragraph		Page
1.1	REFERENCES	16415-1
1.2	GENERAL	16415-3
1.3	SUBMITTALS	16415-5
2.1	MATERIALS AND EQUIPMENT	16415-6
3.1	GROUNDING	16415-10
3.2	WIRING METHODS	16415-11
3.3	BOXES AND SUPPORT	16415-14
3.4	DEVICE PLATES	16415-14
3.5	RECEPTACLES	16415-14
3.6	WALL SWITCHES	16415-15
3.7	SERVICE EQUIPMENT	16415-15
3.8	PANELBOARDS AND LOAD CENTERS	16415-15
3.9	MOTORS	16415-16
3.10	MOTOR CONTROL	16415-16
3.11	MOTOR-DISCONNECT MEANS	16415-16
3.12	LAMPS AND LIGHTING FIXTURES	16415-17
3.13	BATTERY CHARGERS	16415-18
3.14	EQUIPMENT CONNECTIONS	16415-18
3.15	TELEPHONE WIRING SYSTEM	16415-18
3.16	PAINTING AND FINISHING	16415-19
3.17	REPAIR OF EXISTING WORK	16415-19
3.18	TESTS	16415-19
3.19	ONE-LINE DIAGRAM	16415-19

SECTION 16415

ELECTRICAL WORK, INTERIOR

PART 1 GENERAL

1.1 REFERENCES: The publications listed below form a part of this specification to the extent referenced. The publications are referred to in the text by basic designation only.

AMERICAN NATIONAL STANDARDS INSTITUTE (ANSI)

ANSI C39.1	(1981; R 1992) Electrical Analog Indicating Instruments
ANSI C82.4	(1992) Ballasts for High-Intensity-Discharge and Low-Pressure Sodium Lamps (Multiple-Supply Type)

AMERICAN SOCIETY FOR TESTING AND MATERIALS (ASTM)

ASTM D 709	(1992) Laminated Thermosetting Materials

CODE OF FEDERAL REGULATIONS (CFR)

47 CFR 18	Rules and Regulations: Industrial, Scientific, and Medical Equipment
47 CFR 68	Connection of Terminal Equipment to the Telephone Network

INSTITUTE OF ELECTRICAL AND ELECTRONICS ENGINEERS (IEEE)

IEEE C62.41	(1991) Surge Voltages in Low-Voltage AC Power Circuits

INSULATED CABLE ENGINEERS ASSOCIATION (ICEA)

ICEA S-80-576	(1988) Communications Wire and Cable for Wiring of Premises

NATIONAL ELECTRICAL MANUFACTURERS ASSOCIATION (NEMA)

NEMA 250	(1991) Enclosures for Electrical Equipment (1000 Volts Maximum)
NEMA AB 1	(1993) Molded Case Circuit Breakers and Molded Case Switches
NEMA ICS 1	(1993) Industrial Controls and Systems
NEMA ICS 2	(1993) Industrial Control Devices, Controllers and Assemblies
NEMA ICS 3	(1993) Industrial Systems
NEMA ICS 6	(1993) Enclosures for Industrial Control and Systems
NEMA LE 4	(1987) Recessed Luminaires, Ceiling Compatibility
NEMA MG 1	(1993; Rev 1-1993; Rev 2-1995) Motors and Generators

NEMA MG 10	(1994) Energy Management Guide for Selection and Use of Polyphase Motors
NEMA OS 1	(1989) Sheet-Steel Outlet Boxes, Device Boxes, Covers, and Box Supports
NEMA PB 1	(1990) Panelboards
NEMA WD 1	(1983; R 1989) General Requirements for Wiring Devices
NEMA WD 6	(1988) Wiring Devices - Dimensional Requirements

NATIONAL FIRE PROTECTION ASSOCIATION (NFPA)

NFPA 70	(1993) National Electrical Code
NFPA 101	(1994) Safety to Life from Fire in Buildings and Structures

RURAL ELECTRIFICATION ADMINISTRATION (REA)

REA TE&CM 823	(1980) Electrical Protection by Use of Gas Tube Arresters

UNDERWRITERS LABORATORIES (UL)

UL-03	(1995) Electrical Construction Materials Directory
UL 1	(1993; Rev thru Jan 1995) Flexible Metal Conduit
UL 6	(1993) Rigid Metal Conduit
UL 20	(1995) General-Use Snap Switches
UL 44	(1991; Rev thru Jan 1995) Rubber-Insulated Wires and Cables
UL 50	(1992; Rev thru Nov 1994) Enclosures for Electrical Equipment
UL 67	(1993; Rev thru Dec 1993) Panelboards
UL 83	(1991; Rev thru Oct 1994) Thermoplastic-Insulated Wires and Cables
UL 94	(1991; Rev thru Apr 1995) Tests for Flammability of Plastic Materials for Parts in Devices and Appliances
UL 98	(1994; R Feb 1995) Enclosed and Dead-Front Switches
UL 360	(1986; Rev thru Dec 1994) Liquid-Tight Flexible Steel Conduit
UL 467	(1993) Grounding and Bonding Equipment
UL 486A	(1991; Rev Oct 1991) Wire Connectors and Soldering Lugs for Use with Copper Conductors
UL 486C	(1991; Rev thru Sep 1992) Splicing Wire Connectors
UL 489	(1991; Rev thru Jun 1995) Molded-Case Circuit Breakers and Circuit-Breaker Enclosures

UL 497	(1995) Protectors for Paired Conductor Communication Circuits
UL 498	(1991; Rev thru Oct 1994) Attachment Plugs and Receptacles
UL 508	(1993) Industrial Control Equipment
UL 510	(1994) Insulating Tape
UL 514A	(1991; Rev Apr 1995) Metallic Outlet Boxes
UL 514B	(1992; Rev thru Apr 1995) Fittings for Conduit and Outlet Boxes
UL 542	(1994) Lampholders, Starters, and Starter Holders for Fluorescent Lamps
UL 674	(1994; Rev Jul 1995) Electric Motors and Generators for Use in Division 1 Hazardous (Classified) Locations
UL 719	(1985; Rev thru Dec 1994) Nonmetallic-Sheathed Cables
UL 797	(1993; Rev May 1995) Electrical Metallic Tubing
UL 844	(1995) Electric Lighting Fixtures for Use in Hazardous (Classified) Locations
UL 845	(1995) Motor Control Centers
UL 869A	(1993; Rev Apr 1994) Reference Standard for Service Equipment
UL 877	(1993) Circuit Breakers and Circuit-Breaker Enclosures for Use in Hazardous (Classified) Locations
UL 924	(1995) Emergency Lighting and Power Equipment
UL 935	(1995; Rev Jun 1995) Fluorescent-Lamp Ballasts
UL 943	(1993; Rev thru Jan 1995)Ground-Fault Circuit Interrupters
UL 1004	(1994) Electric Motors
UL 1029	(1994; Rev Oct 1994) High-Intensity-Discharge Lamp Ballasts
UL 1242	(1983; Rev thru Jul 1993) Intermediate Metal Conduit
UL 1570	(1988; Rev thru Mar 1995) Fluorescent Lighting Fixtures
UL 1572	(1991; Rev thru Mar 1995) High Intensity Discharge Lighting Fixtures
UL 1660	(1994) Liquid-Tight Flexible Nonmetallic Conduit

TELECOMMUNICATIONS INDUSTRY ASSOCIATION (TIA)/ELECTRONIC INDUSTRIES ASSOCIATION (EIA)

ANSI/TIA/EIA-568-A	Commercial Building Telecommunications Cabling Standard. Approved: October 6, 1995

ANSI/TIA/EIA-569 Commercial Building Standard for Telecommunications Pathways and Spaces. Approved: October 15, 1990

ANSI/TIA/EIA-606 Administration Standard for the Telecommunications Infrastructure of Commercial Building . Approved: January 28, 1993

ANSI/TIA/EIA-607 Commercial Building Grounding and Bonding Requirements for Telecommunications. Approved: August 1, 1994

TIA/EIA TELECOMMUNICATIONS SYSTEMS BULLETIN (TSB) 67
Transmission Performance Specifications for Field Testing of Unshielded Twisted-Pair Cabling Systems. Approved: October 1995.

TIA/EIA TELECOMMUNICATIONS SYSTEMS BULLETIN (TSB) 75
Additional Horizontal Cabling Practices for Open Offices. Approved: August 1996

ICEA S-80-576 Communications Wire and Cable for Wiring Premises. Dated 1988.

1.2 GENERAL

1.2.1 Rules: The installation shall conform to the requirements of NFPA 70 and NFPA 101, unless more stringent requirements are indicated herein or shown.

1.2.2 Coordination: The drawings indicate the extent and the general location and arrangement of equipment, conduit, and wiring. The Contractor shall become familiar with all details of the work and verify all dimensions in the field so that the outlets and equipment shall be properly located and readily accessible. Lighting fixtures, outlets, and other equipment and materials shall be located to avoid interference with mechanical or structural features; otherwise, lighting fixtures shall be symmetrically located according to the room arrangement when uniform illumination is required, or asymmetrically located to suit conditions fixed by design and shown. Raceways, junction and outlet boxes, and lighting fixtures shall not be supported from sheet metal roof decks. If any conflicts occur necessitating departures from the drawings, details of and reasons for departures shall be submitted and approved prior to implementing any change. The Electrical Contractor shall coordinate the electrical work with HVAC and electrical drawings and provide all power related wiring even if they are not shown on electrical drawings.

1.2.3 Special Environments

1.2.3.1 Weatherproof Locations: Wiring, Fixtures, and equipment in designated locations shall conform to NFPA 70 requirements for installation in damp or wet locations.

1.2.4 Standard Products: Material and equipment shall be a standard product of a manufacturer regularly engaged in the manufacture of the product and shall essentially duplicate items that have been in satisfactory use for at least 2 years prior to bid opening.

1.2.5 Identification Nameplates: Major items of electrical equipment and major components shall be permanently marked with an identification name to identify the equipment by type or function and specific unit number as indicated. Designation of motors shall coincide with their designation in the motor control center or panel. Unless otherwise specified, all identification nameplates shall be made of laminated plastic in accordance with ASTM D 709 with black outer layers and a white core. Edges shall be chamfered. Plates shall be fastened with black-finished round-head drive screws, except motors, or approved nonadhesive metal fasteners. When the nameplate is to be installed on an irregular-shaped object, the Contractor shall devise an approved support suitable for the application and ensure the proper installation of the supports and nameplates. In all instances, the nameplate shall be installed in a

conspicuous location. At the option of the Contractor, the equipment manufacturer's standard embossed nameplate material with black paint-filled letters may be furnished in lieu of laminated plastic. The front of each panelboard, motor control center, switchgear, and switchboard shall have a nameplate to indicate the phase letter, corresponding color and arrangement of the phase conductors. The following equipment, as a minimum, shall be provided with identification nameplates:

Minimum 6.4 mm High Letters	Minimum 3.2 mm High Letters
Panelboards	Control Power Transformers
Starters	Control Devices
Safety Switches	Instrument Transformers
Motor Control Centers	
Transformers	
Equipment Enclosures	
Switchgear	
Switchboards	
Motors	

Minimum 1/4 inch High Letters	Minimum 1/8 inch High Letters
Panelboards	Control Power Transformers
Starters	Control Devices
Safety Switches	Instrument Transformers
Transformers	
Equipment Enclosures	
Motors	

Each panel, section, or unit in motor control centers, switchgear or similar assemblies shall be provided with a nameplate in addition to nameplates listed above, which shall be provided for individual compartments in the respective assembly, including nameplates which identify "future," "spare," and "dedicated" or "equipped spaces."

1.2.6 As Built Drawings: Following the project completion or turnover, within 30 days the Contractor shall furnish two sets of as built drawings to the Contracting Officer.

1.3 SUBMITTALS

Government approval is required for submittals with a "GA" designation; submittals having an "FIO" designation are for information only. The following shall be submitted in accordance with Section 01300 SUBMITTAL PROCEDURES:

SD-04 Drawings

Electrical Work; GA.

Detail drawings for all materials and equipment specified. Detail drawings shall consist of a complete list of equipment and materials, including manufacturer's descriptive and technical data; catalog cuts; and any special installation instructions that may be required. Drawings shall show applicable schematic diagrams and equipment layout and anchorage.Telephone system drawings showing actual layout, including locations, type any gauge of cables, and terminal assignment of wiring, after installation.

SD-09 Reports
Materials and Equipment; GA.

The label or listing of the Underwriters Laboratories, Inc., shall be accepted as evidence that the materials or equipment conform to the applicable standards of that agency. In lieu of this label or listing, a statement from a nationally recognized, adequately equipped testing agency indicating that the items have been tested in accordance with required procedures and that the materials and equipment comply with all contract requirements will be accepted. However, materials and equipment installed in hazardous locations must bear the UL label unless the data submitted from other testing agency is specifically approved in writing by the Contracting Officer. Materials and equipment shall be approved based on the manufacturer's published data.

For other than equipment and materials specified to conform to UL publications, a manufacturer's statement indicating complete compliance with the applicable Federal Specification, or standard of the American Society for Testing and Materials, National Electrical Manufacturers Association, or other commercial standard, is acceptable.

SD-13 Certificates

Telephone Installer; GA.

Qualifications of the telephone installer.

1.4 WORKMANSHIP: Materials and equipment shall be installed in accordance with recommendations of the manufacturer and as shown.

PART 2 PRODUCTS

2.1 MATERIALS AND EQUIPMENT: Materials and equipment shall conform to the respective publications and other requirements specified below. Materials and equipment not listed below shall be as specified elsewhere in this section.

2.1.1 Cables and Wires: Conductors in cables shall be annealed copper. Cables shall be single-conductor type, unless otherwise indicated. Cables and wires shall conform to UL 44 for rubber-insulated type; UL 83 for the thermoplastic-insulated type; and UL 719 for the nonmetallic-sheathed cables. The following types shall be provided.

2.1.1.1 Service Entrance Cable: Type SE USE.

2.1.1.2 Grounding Cables: Grounding cables shall be bare or shall have green low-voltage insulation.

2.1.1.3 Building Wire: Type THHN/THWN.

2.1.1.4 Telephone Cables: ICEA S-80-576

2.1.2 Connector Blocks: Connector blocks shall be type 66 equipped with punch down clips.

2.1.3 Telephone Backboards: Backboards shall be 3/4 inch plywood having a two-coat insulating varnish finish.

2.1.4 Protector Modules: The protector modules shall be of the three-electrode gas tube type. Protection modules shall be light duty as specified in REA TE&CM 823. The gas modules shall be fail-short and shall shunt high voltage to ground in less than 10 nanoseconds, shall have an external spark gap, and shall comply with UL 497.

2.1.5 Molded-Case Circuit Breakers: NEMA AB 1 and UL 489 for circuit breakers, and UL 877 for circuit breakers and circuit breaker enclosures in hazardous (classified) locations.

a. Molded-Case Circuit Breakers: Single-pole breakers shall be full module size; two poles shall not be installed in a single module. Multipole breakers shall be of the common-trip type having a single operating handle, but for sizes of 100 amperes or less may consist of single-pole breakers permanently factory assembled into a multipole unit having an internal, mechanical, nontamperable common-trip mechanism and external handle ties. All poles of associated breakers shall open if any fuse blows.

2.1.5.1 Ground Fault Circuit Interrupters: UL 943. Breakers equipped with ground fault interrupters shall have ground fault class, interrupting capacity, and voltage and current ratings as indicated.

2.1.6 Conduit and Tubing

2.1.6.1 Electrical, Zinc-Coated Steel Metallic Tubing (EMT): UL 797.

2.1.6.2 Flexible Conduit, Steel and Plastic: General-purpose type, UL 1; liquid tight, UL 360, and UL 1660

2.1.6.3 Intermediate Metal Conduit: UL 1242.

2.1.6.4 Rigid Metal Conduit: UL 6.

2.1.7 Conduit and Device Boxes and Fittings

2.1.7.1 Boxes, Metallic Outlet: NEMA OS 1 and UL 514A.

2.1.7.2 Boxes, Switch (Enclosed), Surface-Mounted: UL 98.

2.1.7.3 Fittings for Conduit and Outlet Boxes: UL 514B.

2.1.8 Connectors, Wire Pressure

2.1.8.1 Copper Conductors: UL 486A.

2.1.9 Electrical Grounding and Bonding Equipment: UL 467.

2.1.9.1 Ground Rods: See Section 16375.

2.1.9.2 Ground Bus: The ground bus shall be bare conductor or flat copper in one piece, if practicable.

2.1.10 Enclosures: NEMA ICS 6 or NEMA 250 unless otherwise specified.

2.1.10.1 Cabinets and Boxes, Volume Greater Than 100 Cubic Inches: UL 50, hot-dip, zinc-coated, if sheet steel.

2.1.10.2 Circuit Breaker: UL 489.

2.1.11 Fixtures, Lighting and Fixture Accessories/Components: Standard Drawing 40-06-04 sheets referenced hereinafter and enclosed as an integral part of these specifications, additional fixtures shown on contract drawings, if any and UL 844 for fixtures to be installed in hazardous (classified) locations. Fixtures, accessories and components, including ballasts, lampholders, lamps, starters and starter holders, shall conform to industry standards specified below.

2.1.11.1 Fixture, Auxiliary or Emergency: UL 924.

2.1.11.2 Fluorescent:

a. Fixture: NEMA LE 4 for ceiling compatibility of recessed fixtures and UL 1570. Fixtures shall be plainly marked for proper lamp and ballast type to identify lamp diameter, wattage, color and start type. Marking shall be readily visible to service personnel, but not visible from normal viewing angles.

b. Electronic Ballasts: Electronic ballasts shall consist of a rectifier, high frequency inverter, and power control and regulation circuitry. The ballasts shall be UL listed, Class P, with a Class A sound rating and shall contain no PCBs. Ballasts shall meet 47 CFR 18 for electromagnetic interference and shall not interfere with the operation of other electrical equipment. Design shall withstand line transients per IEEE C62.41, Category A. Unless otherwise indicated, the minimum number of ballasts shall be used to serve each individual fixture, using one, two, three or four lamp ballasts. A single ballast may be used to serve multiple fixtures if they are continuous mounted, factory manufactured for that installation with an integral wireway and are identically controlled.

(a) Light output regulation shall be +/- 10%.
(b) Voltage input regulation shall be +/- 10%.
(c) Lamp current crest factor shall be no more than 1.7.
(d) Ballast factor shall be not less than 85% nor more than 100%, unless otherwise indicated.
(e) A 60 Hz filter shall be provided. Flicker shall be no more than 15% with any lamp suitable for the ballast.
(f) Ballast case temperature shall not exceed 25 degree celsius rise above 40 degree celsius ambient, when tested in accordance with UL 935.
(g) Input current third harmonic shall not exceed 32 percent total harmonic distortion or 27.5 percent of the third triplens.
(h) Power factor shall not be less than 0.9.
(i) Ballasts shall operate at a frequency of 20 KHz or more.
(j) Operating filament voltage shall be 2.5 to 4.5 volts.
(k) Warranty. Three year full warranty including a $10 labor allowance.
(l) Ballast Efficacy Factor (BEF) shall be in accordance with the following table. Ballasts and lamps shall be matching rapid start or instant start as indicated on the following table. If F032-T8 lamps and ballasts are used, they must be either all rapid start or all instant start.

ELECTRONIC FLUORESCENT BALLAST EFFICACY FACTORS

LAMP TYPE	TYPE OF STARTER & LAMP	NOMINAL OPERATIONAL INPUT VOLTAGE	NUMBER OF LAMPS	MIN. BALLAST EFFICACY FACTOR
F032-T8	rapid or instant start	120 or 277 V	1	2.4
			2	1.4
			3	1.0
			4	0.8

*For ballasts not specifically designed for use with dimming controls

The BEF is calculated using the formula:

BEF = Ballast Factor (in percent) / Power Input

Where Power Input = Total Wattage of Combined Lamps and Ballasts.

c. Lampholders, Starters, and Starter Holders: UL 542.

2.1.11.3 High-Intensity-Discharge

a. Fixture: NEMA LE 4 for ceiling compatibility of recessed fixtures and UL 1572.

b. Ballasts: ANSI C82.4 for multiple supply types and UL 1029.

2.1.12 Instruments, Electrical Indicating: ANSI C39.1.

2.1.13 Motors, ac, Fractional and Integral: Motors, ac, fractional and integral kilowatt,horsepower, 373.0 kW (500 hp)500 hp and smaller shall conform to NEMA MG 1 and UL 1004 for motors; NEMA MG 10 for energy management selection of polyphase motors; and UL 674 for use of motors in hazardous (classified) locations.

2.1.13.1 Rating: The horsepower rating of motors should be limited to no more than 125 percent of the maximum load being served unless a NEMA standard size does not fall within this range. In this case, the next larger NEMA standard motor size should be used.

2.1.13.2 Motor Efficiencies: All permanently wired polyphase motors of 746 W (1 hp)1 hp or more shall meet the minimum full-load efficiencies as indicated in the following table, and as specified in this specification. Motors of 1 hp or more with open, dripproof or totally enclosed fan cooled enclosures shall be high efficiency type, unless otherwise indicated. Motors provided as an integral part of motor driven equipment are excluded from this requirement if a minimum seasonal or overall efficiency requirement is indicated for that equipment by the provisions of another section.

Minimum Motor Efficiencies

HP	Std. Efficiency	High Efficiency
1	77.0	85.5
1.5	78.5	85.5
2	78.5	85.5
3	78.5	88.5
5	82.5	88.5
7.5	84.0	90.0
10	85.5	90.0
15	85.5	91.0
20	87.5	92.0
25	88.5	92.0
30	88.5	92.0
40	88.5	92.0
50	89.0	92.5
60	89.0	92.5
75	89.0	95.5
100	90.0	93.5
125	91.0	94.5
150	91.0	94.5
200	91.0	94.5
250	91.0	94.5
300	91.0	94.5
350	91.0	94.5
400	91.0	94.5
500	91.0	94.5

2.1.14 Motor Controls: NEMA ICS 1, NEMA ICS 2, NEMA ICS 3 and NEMA ICS 6, and UL 508 and UL 845.

2.1.15 Panelboards: Dead-front construction, NEMA PB 1 and UL 67.

2.1.16 Receptacles

2.1.16.1 Standard Grade: UL 498.

2.1.16.2 Ground Fault Interrupters: UL 943, Class A or B.

2.1.17 Service Equipment: UL 869A.

2.1.18 Splice, Conductor: UL 486C.

2.1.19 Snap Switches: UL 20.

2.1.20 Tapes

2.1.20.1 Plastic Tape: UL 510.

2.1.20.2 Rubber Tape: UL 510.

2.1.21 Watthour Meters: See Section 16375.

2.1.22 Wiring Devices: NEMA WD 1 for general-purpose wiring devices, and NEMA WD 6 for dimensional requirements of wiring devices.

2.1.23 Telephone Jacks: 47 CFR 68, plastic shall be class VO in accordance with UL 94.

PART 3 EXECUTION

3.1 GROUNDING: Grounding shall be in conformance with NFPA 70 and the contract drawings.

3.1.1 Ground Bus: Ground bus shall be provided in the electrical equipment rooms as indicated. Noncurrent-carrying metal parts of electrical equipment shall be effectively grounded by bonding to the bus. The ground bus shall be bonded to both the entrance ground, and to a ground rod or rods as specified above having the upper ends terminating approximately 4 inches above the floor. Connections and splices shall be of the brazed, welded, bolted, or pressure-connector type, except that pressure connectors or bolted connections shall be used for connections to removable equipment. For raised floor equipment rooms in computer and data processing centers, a minimum of 4, one at each corner, multiple grounding systems shall be furnished. Connections shall be bolted type in lieu of thermoweld, so they can be changed as required by additions and/or alterations.

3.1.2 Grounding Conductors: A green ground wire shall be furnished regardless of the type of conduit. All equipment grounding conductors, including metallic raceway systems used as such, shall be bonded or joined together in each wiring box or equipment enclosure. Metallic raceways and grounding conductors shall be checked to assure that they are wired or bonded into a common junction. Metallic boxes and enclosures, if used, shall also be bonded to these grounding conductors by an approved means per NFPA 70. When boxes for receptacles, switches, or other utilization devices are installed, any designated grounding terminal on these devices shall also be bonded to the equipment grounding conductor junction with a short jumper.

3.2 WIRING METHODS

3.2.1 General Requirements: Unless otherwise indicated, wiring shall consist of insulated conductors installed in zinc-coated steel conduit, electrical metallic tubing, or intermediate metal conduit.

3.2.2 Conduit and Tubing Systems: Conduit and tubing systems shall be installed as indicated. Conduit sizes shown are based on use of copper conductors with insulation types as described in paragraph WIRING METHODS. Minimum size of raceways shall be 3/4 inch. Only metal conduits will be permitted when conduits are required for shielding or other special purposes indicated, or when required by conformance to NFPA 70. Electrical metallic tubing may be installed only within buildings. Electrical metallic tubing may be installed in concrete and grout in dry locations. Electrical metallic tubing installed in concrete or grout shall be provided with concrete tight fittings. EMT shall not be installed in damp or wet locations, or the air space of exterior masonry cavity walls. Bushings, manufactured fittings or boxes providing equivalent means of protection shall be installed on the ends of all conduits and shall be of the insulating type, where required by NFPA 70. Only UL listed adapters shall be used to connect EMT to rigid metal conduit, cast boxes, and conduit bodies. Aluminum conduit may be used only where installed exposed in dry locations. Nonaluminum sleeves shall be used where aluminum conduit passes through concrete floors and firewalls. Penetrations of above grade floor slabs, time-rated partitions and fire walls shall be firestopped in accordance with Section 07270 FIRESTOPPING. Except as otherwise specified, IMC may be used as an option for rigid steel conduit in areas as permitted by NFPA 70. Raceways shall not be installed under the firepits of boilers and furnaces and shall be kept 6 inches away from parallel runs of flues, steam pipes and hot-water pipes. Raceways shall be concealed within finished walls, ceilings, and floors unless otherwise shown. Raceways crossing structural expansion joints shall be provided with suitable expansion fittings or other suitable means to compensate for the building expansion and contraction and to provide for continuity of grounding.

3.2.2.1 Below Slab-on-Grade or in the Ground: Electrical wiring below slab-on-grade shall be protected by a conduit system. Conduit passing vertically through slabs-on-grade shall be rigid steel or IMC Rigid steel or IMC conduits installed below slab-on-grade or in the earth shall be field wrapped with 0.010 inch thick pipe-wrapping plastic tape applied with a 50 percent overlay, or shall have a factory-applied polyvinyl chloride, plastic resin, or epoxy coating system.

3.2.2.2 Installing in Slabs Including Slabs on Grade: Conduits shall be installed as close to the middle of concrete slabs as practicable without disturbing the reinforcement. Outside diameter shall not exceed 1/3 of the slab thickness and conduits shall be spaced not closer than 3 diameters on centers except at cabinet locations where the slab thickness shall be increased as approved by the Contracting Officer.

3.2.2.3 Exposed Raceways: Exposed raceways shall be installed parallel or perpendicular to walls, structural members, or intersections of vertical planes and ceilings. Raceways under raised floors and above accessible ceilings shall be considered as exposed installations in accordance with NFPA 70 definitions.

3.2.2.4 Changes in Direction of Runs: Changes in direction of runs shall be made with symmetrical bends or cast-metal fittings. Field-made bends and offsets shall be made with an approved hickey or conduit-bending machine. Crushed or deformed raceways shall not be installed. Trapped raceways in damp and wet locations shall be avoided where possible. Care shall be taken to prevent the lodgment of plaster, dirt, or trash in raceways, boxes, fittings and equipment during the course of construction. Clogged raceways shall be entirely freed of obstructions or shall be replaced.

3.2.2.5 Supports: Metallic conduits and tubing shall be securely and rigidly fastened in place at intervals of not more than 10 feet and within 3 feet of boxes, cabinets, and fittings, with approved pipe straps, wall brackets, conduit clamps, conduit hangers, threaded C-clamps, or ceiling trapeze. C-clamps or beam clamps shall have strap or rod-type retainers. Rigid plastic conduits (if permitted as a wiring method) shall be supported as indicated above, except that they will be supported at intervals as indicated in NFPA 70. Loads and supports shall be coordinated with supporting structure to prevent damage or deformation to the structures, but no load shall be applied to joist bridging. Fastenings shall be by wood screws or screw-type nails to wood; by toggle bolts on hollow masonry units; by expansion bolts on concrete or brick; by machine screws, welded threaded studs, heat-treated or spring-steel-tension clamps

on steel work. Nail-type nylon anchors or threaded studs driven in by a powder charge and provided with lock washers and nuts may be used in lieu of expansion bolts or machine screws. Raceways or pipe straps shall not be welded to steel structures. Holes cut to a depth of more than 1-1/2 inches in reinforced concrete beams or to a depth of more than 3/4 inch in concrete joists shall avoid cutting the main reinforcing bars. Holes not used shall be filled. In partitions of light steel construction, sheet-metal screws may be used. Conduit shall not be supported using wire or nylon ties. Raceways shall be installed as a complete system and be independently supported from the structure. Upper raceways shall not be the support of lower raceways. Supporting means will not be shared between electrical raceways and mechanical piping or ducts and shall not be fastened to hung ceiling supports. Conduits shall be fastened to all sheet-metal boxes and cabinets with two locknuts where required by the NFPA 70, where insulating bushings are used, and where bushings cannot be brought into firm contact with the box; otherwise, a single locknut and bushing may be used. Threadless fittings for electrical metallic tubing shall be of a type approved for the conditions encountered. A pull wire shall be inserted in each empty raceway in which wiring is to be installed by others if the raceway is more than 50 feet in length and contains more than the equivalent of two 90-degree bends, or where the raceway is more than 150 feet in length. The pull wire shall be of No. 14 AWG zinc-coated steel, or of plastic having not less than 200 pound per square inch tensile strength. Not less than 10 inches of slack shall be left at each end of the pull wire. Additional support for horizontal runs is not required when EMT rests on steel stud cutouts.

3.2.2.6 Communications Raceways: Communications raceways indicated shall be installed in accordance with the previous requirements for conduit and tubing and with the additional requirements that no length of run shall exceed 50 feet for 3/4 inch size, and 100 feet for 1 inch or larger sizes, and shall not contain more than two 90-degree bends or the equivalent. Additional pull or junction boxes shall be installed to comply with these limitations whether or not indicated. Inside radii of bends in conduits of 1 inch size or larger shall be not less than ten times the nominal diameter.

3.2.3 Cable Systems: Cables shall be installed concealed behind ceiling or wall finish where practicable. Cables shall be threaded through holes bored on the approximate centerline of wood members; notching of surfaces will not be permitted. Sleeves shall be provided through bond beams of masonry-block walls for threading cables through hollow spaces. Exposed cables shall be installed parallel or at right angles to walls or structural members. In rooms or areas not provided with ceiling or wall finish, cables and outlets shall be installed so that a room finish may be applied in the future without disturbing the cables or resetting the boxes.

3.2.4 Cables and Conductors: Wire connectors of insulating material or solderless pressure connectors properly taped shall be utilized for all splices.

3.2.4.1 Sizes: All sizes are based on copper conductors, unless otherwise indicated. Sizes shall be not less than indicated. Branch-circuit conductors shall be not smaller than No. 12 AWG. Conductors for branch circuits of 120 volts more than 100 feet long and of 277 volts more than 70 meters 230 feet long, from panel to load center, shall be no smaller than No. 10 AWG. Class 1 remote control and signal circuit conductors shall be not less than No. 14 AWG. Class 2 remote control and signal circuit conductors shall be not less than No. 16 AWG.: The conductor sizes are based on the use of THW/THWN insulation.: Higher temperature rated conductors will be permitted to be used, if the UL tested temperature ratings for which the equipment in the circuit is marked are not exceeded.: Conductor sizes for nonlinear loads shall be based on the use of minimum 75 degrees C insulated conductors for branch circuits and feeders.

3.2.4.2 Power Conductor Identification: Phase conductors shall be identified by color coding. The color of the insulation on phases A and B respectively (for single phase) of different voltage systems shall be as follows:: 120/240 volt, single/phase: Black and red.: Conductor phase and voltage identification shall be made by color-coded insulation for all conductors smaller than No. 6 AWG. For conductors No. 6 AWG and larger, identification shall be made by color-coded insulation, or conductors with black insulation may be furnished and identified by the use of half-lapped bands of colored electrical tape

wrapped around the insulation for a minimum of 3 inches of length near the end, or other method as submitted by the Contractor and approved by the Contracting Officer. Conductor identification shall be provided within each enclosure where a tap, splice, or termination is made. Phase identification by a particular color shall be maintained continuously for the length of a circuit, including junctions.

3.2.4.3 Control Conductor Identification: Control circuit conductor identification shall be made by color-coded insulated conductors, plastic-coated self-sticking printed markers, permanently attached stamped metal foil markers, or equivalent means as approved. Control circuit terminals of equipment shall be properly identified. Terminal and conductor identification shall match that shown on approved detail drawings. Hand lettering or marking is not acceptable.

3.3 BOXES AND SUPPORTS: Boxes shall be provided in the wiring or raceway systems wherever required for pulling of wires, making connections, and mounting of devices or fixtures. Boxes for metallic raceways, 4 by 4 inch nominal size and smaller, shall be of the cast-metal hub type when located in normally wet locations, when flush and surface mounted on outside of exterior surfaces, or when located in hazardous areas. Large size boxes shall be NEMA 1 or as shown. Boxes in other locations shall be sheet steel. In partitions of light steel construction bar hangers with 1 inch long studs, mounted between metal wall studs or metal stud "C" brackets snapped on and tab-locked to metal wall studs, shall be used to secure boxes to the building structure. When "C" brackets are used, additional box support shall be provided on the side of the box opposite the brackets. The edges of boxes for electrical devices shall be flush with the finished surfaces in gypsum and plasterboard installations. Boxes for mounting lighting fixtures shall be not less than 4 inches square except smaller boxes may be installed as required by fixture configuration, as approved. Boxes installed for concealed wiring shall be provided with suitable extension rings or plaster covers, as required. The bottom of boxes installed in masonry-block walls for concealed wiring shall be flush with the top of a block to minimize cutting of blocks, and boxes shall be located horizontally to avoid cutting webs of block. Indicated elevations are approximate, except where minimum mounting heights for hazardous areas are required by NFPA 70. Unless otherwise indicated, boxes for wall switches shall be mounted 48 inches above finished floors. Switch and outlet boxes on opposite sides of fire rated walls shall be separated by a minimum horizontal distance of 24 inches. Cast-metal boxes installed in wet locations and boxes installed flush with the outside of exterior surfaces shall be gasketed. Separate boxes shall be provided for flush or recessed fixtures when required by the fixture terminal operating temperature, and fixtures shall be readily removable for access to the boxes unless ceiling access panels are provided. Boxes and supports shall be fastened to wood with wood screws or screw-type nails of equal holding strength, with bolts and metal expansion shields on concrete or brick, with toggle bolts on hollow masonry units, and with machine screws or welded studs on steel work. Threaded studs driven in by powder charge and provided with lockwashers and nuts, or nail-type nylon anchors may be used in lieu of expansion shields, or machine screws. In open overhead spaces, cast-metal boxes threaded to raceways need not be separately supported except where used for fixture support; cast-metal boxes having threadless connectors and sheet metal boxes shall be supported directly from the building structure or by bar hangers. Hangers shall not be fastened to or supported from joist bridging. Cast-metal boxes with 3/32 inch wall thickness are acceptable. Where bar hangers are used, the bar shall be attached to raceways on opposite sides of the box and the raceway shall be supported with an approved type fastener not more than 24 inches from the box. Penetration of more than 1-1/2 inches into reinforced-concrete beams or more than 3/4 inch into reinforced-concrete joists shall avoid cutting any main reinforcing steel.

3.3.1 Boxes for Use with Raceway Systems: Boxes for use with raceway systems shall be not less than 1-1/2 inches deep except where shallower boxes required by structural conditions are approved. Sheetmetal boxes for other than lighting fixtures shall be not less than 4 inches square except that 4 by 2 inch boxes may be used where only one raceway enters the outlet. Contractor shall size the telephone outlet boxes as required by the number, size and type of outlets specified and as required by the outlets furnished by the Contractor.

3.3.2 Boxes for Use with Cable Systems: Boxes for use with cable systems shall be not less than 3 by 2 inch sectional boxes, 2 inches deep.

3.3.3 Pull Boxes: Pull boxes of not less than the minimum size required by NFPA 70 shall be constructed of galvanized sheet steel, except where cast-metal boxes are required in locations specified above. Boxes shall be furnished with screw-fastened covers. Where several feeders pass through a common pull box, the feeders shall be tagged to indicate clearly the electrical characteristics, circuit number, and panel designation.

3.3.4 Floor Outlets: Floor outlets shall be adjustable and each outlet shall consist of a cast-metal body with threaded openings for conduits, adjustable ring, and cover plate with 1/2 or 3/4 inch threaded flush plug. Each telephone outlet shall consist of a horizontal cast housing with a 1 inch bushed side opening. Each receptacle outlet shall consist of a horizontal cast housing with a receptacle as specified. Gaskets shall be used where necessary to ensure a watertight installation. Plugs with installation instructions shall be delivered to the Contracting Officer at the job site for capping outlets upon removal of service fittings.

3.3.5 Conduit Stub-Ups: Conduits stubbed up through concrete floors for connections to freestanding equipment shall be provided with a short elbow and an adjustable top or coupling threaded inside for plugs, set flush with the finished floor. Wiring shall be extended in rigid threaded conduit to equipment, except that where required, flexible conduit may be used 6 inches above the floor. Screwdriver-operated threaded flush plugs shall be installed in spare conduits.

3.4 DEVICE PLATES: One-piece type device plates shall be provided for all outlets and fittings. Plates on unfinished walls and on fittings shall be of zinc-coated sheet steel, cast-metal, or impact resistant plastic having rounded or beveled edges. Plates on finished walls shall be of steel with baked enamel finish or impact-resistant plastic and shall be ivory. Screws shall be of metal with countersunk heads, in a color to match the finish of the plate. Plates shall be installed with all four edges in continuous contact with finished wall surfaces without the use of mats or similar devices. Plaster fillings will not be permitted. Plates shall be installed with an alignment tolerance of 1/16 inch. The use of sectional-type device plates will not be permitted. Plates installed in wet locations shall be gasketed and provided with a hinged, gasketed cover, unless otherwise specified.

3.5 RECEPTACLES

3.5.1 Single and Duplex: Single and duplex receptacles shall be rated 20 amperes, 125 volts, two-pole, three-wire, grounding type with polarized parallel slots. Bodies shall be of ivory to match color of switch handles in the same room or to harmonize with the color of the respective wall, and supported by mounting strap having plaster ears. Contact arrangement shall be such that contact is made on two sides of an inserted blade. Receptacle shall be side- or back-wired with two screws per terminal. The third grounding pole shall be connected to the metal mounting yoke. Switched receptacles shall be the same as other receptacles specified except that the ungrounded pole of each suitable receptacle shall be provided with a separate terminal. Only the top receptacle of a duplex receptacle shall be wired for switching application. Receptacles with ground fault circuit interrupters shall have the current rating as indicated, and shall be UL Class A type unless otherwise shown. Ground fault circuit protection shall be provided as required by NFPA 70 and as indicated on the drawings.

3.5.2 Weatherproof Applications: Weatherproof receptacles shall be suitable for the environment, damp or wet as applicable, and the housings shall be labeled to identify the allowable use. Receptacles shall be marked in accordance with UL 514A for the type of use indicated; "Damp locations", "Wet Locations", "Wet Location Only When Cover Closed". Assemblies shall be installed in accordance with the manufacturer's recommendations.

3.5.2.1 Damp Locations: Receptacles in damp locations shall be mounted in an outlet box with a gasketed, weatherproof, cast-metal cover plate (device plate, box cover) and a gasketed cap (hood, receptacle cover) over each receptacle opening. The cap shall be either a screw-on type permanently

attached to the cover plate by a short length of bead chain or shall be a flap type attached to the cover with a spring loaded hinge.

3.5.2.2 Wet Locations: Receptacles in wet locations must be installed in an assembly rated for such use whether the plug is inserted or withdrawn, unless otherwise indicated. In a duplex installation, the receptacle cover shall be configured to shield the connections whether one or both receptacles are in use.

3.6 WALL SWITCHES: Wall switches shall be of the totally enclosed tumbler type. The wall switch handle and switch plate color shall harmonize with the color of the respective wall. Wiring terminals shall be of the screw type or of the solderless pressure type having suitable conductor-release arrangement. Not more than one switch shall be installed in a single-gang position. Switches shall be rated 20-ampere 120-volt for use on alternating current only. Pilot lights indicated shall consist of yoke-mounted candelabra-base sockets rated at 75 watts, 125 volts, and fitted with glass or plastic jewels. A clear 6-watt lamp shall be furnished and installed in each pilot switch. Jewels for use with switches controlling motors shall be green, and jewels for other purposes shall be red. Dimming switches shall be solid-state flush mounted, sized for the loads.

3.7 SERVICE EQUIPMENT: Service-disconnecting means shall be of the enclosed molded-case circuit breaker type as indicated with external handle for manual operation. When service disconnecting means is a part of an assembly, the assembly shall be listed as suitable for service entrance equipment. Enclosures shall be sheet metal with hinged cover for surface mounting unless otherwise indicated.

3.8 PANELBOARDS AND LOADCENTERS: Circuit breakers and switches used as a motor disconnecting means, and not in sight of the motor and the driven machinery location, shall be capable of being locked in the open position. Door locks shall be keyed alike. Nameplates shall be as approved. Directories shall be typed to indicate loads served by each circuit and mounted in a holder behind a clear protective covering. Busses shall be copper or aluminum.

3.8.1 Loadcenters: Loadcenters shall be circuit breaker equipped.

3.8.2 Panelboards: Panelboards shall be circuit breaker equipped.

3.9 MOTORS: Motors shall be as specified in paragraph Motors, ac, Fractional and Integral Horsepower, whether or not motors are separately provided or included in equipment assemblies specified in other sections of these specifications. Each motor shall conform to the hp and voltage ratings indicated, and shall have a service factor and other characteristics that are essential to the proper application and performance of the motors under conditions shown or specified. Unless otherwise specified, all motors shall have open frames, and continuous-duty classification based on a 40 degree C ambient temperature reference. The Contractor shall be responsible for selecting the actual horsepower ratings and other motor requirements necessary for the applications indicated. When electrically driven equipment furnished under other sections of these specifications materially differs from the design, the Contractor shall make the necessary adjustments to the wiring, disconnect devices and branch-circuit protection to accommodate the equipment actually installed.

3.10 MOTOR CONTROL: Each motor or group of motors requiring a single control shall be provided under other sections of these specifications with a suitable controller and devices that will perform the functions as specified for the respective motors. Each motor of 1/8 hp or larger shall be provided with thermal-overload protection. Polyphase motors shall have overload protection in each ungrounded conductor. The overload-protection device shall be provided either integral with the motor or controller, or shall be mounted in a separate enclosure. Unless otherwise specified, the protective device shall be of the manually reset type. Single or double pole tumbler switches specifically designed for alternating-current operation only may be used as manual controllers for single-phase motors having a current rating not in excess of 80 percent of the switch rating. Automatic control devices such as thermostats, float or pressure switches may control the starting and stopping of motors directly, provided the devices used are

designed for that purpose and have an adequate horsepower rating. When the automatic-control device does not have such a rating, a magnetic starter shall be used, with the automatic-control device actuating the pilot-control circuit. When combination manual and automatic control is specified and the automatic-control device operates the motor directly, a double-throw, three-position tumbler or rotary switch shall be provided for the manual control; when the automatic-control device actuates the pilot control circuit of a magnetic starter, the latter shall be provided with a three-position selector switch marked MANUAL-OFF-AUTOMATIC. Connections to the selector switch shall be such that only the normal automatic regulatory control devices will be bypassed when the switch is in the Manual position; all safety control devices, such as low- or high-pressure cutouts, high-temperature cutouts, and motor-overload protective devices, shall be connected in the motor-control circuit in both the Manual and the Automatic positions of the selector switch. Control circuit connections to any MANUAL-OFF-AUTOMATIC switch or to more than one automatic regulatory control device shall be made in accordance with wiring diagram approved by the Contracting Officer unless such diagram is included on the drawings. All controls shall be 120 volts or less unless otherwise indicated.

3.10.2 Contacts: Contacts in miscellaneous control devices such as float switches, pressure switches, and auxiliary relays shall have current and voltage ratings in accordance with NEMA ICS 2 for rating designation B300.

3.10.3 Safety Controls: Safety controls for boilers shall be connected to a 2-wire, 120 volt grounded circuit supplied from the associated boiler-equipment circuit. Where the boiler circuit is more than 120 volts to ground, safety controls shall be energized through a two-winding transformer having its 120 volt secondary winding grounded. Overcurrent protection shall be provided in the ungrounded secondary conductor and shall be sized for the load encountered.

3.11 MOTOR-DISCONNECT MEANS: Each motor shall be provided with a disconnecting means when required by NFPA 70 even though not indicated. For single-phase motors, a single or double pole toggle switch, rated only for alternating current, will be acceptable for capacities less than 30 amperes, provided the ampere rating of the switch is at least 125 percent of the motor rating. Switches shall disconnect all ungrounded conductors.

3.12 LAMPS AND LIGHTING FIXTURES: Ballasted fixtures shall have ballasts which are compatible with the specific type and rating of lamps indicated and shall comply with the applicable provisions of the publications referenced.

3.12.1 Lamps: Lamps of the type, wattage, and voltage rating indicated shall be delivered to the project in the original cartons and installed in the fixtures just prior to the completion of the project.

3.12.1.1 Incandescent: Incandescent lamps shall be for 120-volt operation unless otherwise indicated.

3.12.1.2 Fluorescent: Fluorescent lamps shall be T8 type, 3500k color temperature.

3.12.1.3 High-Intensity-Discharge: High-intensity-discharge lamps shall be the high-pressure sodium type unless otherwise indicated, shown, or approved.

3.12.2 Fixtures: Fixtures shall be as shown and shall conform to the following specifications and shall be as detailed on Standard Drawing No. 40-06-04, Sheet Nos. 16, 20, 30, 31, 39, 41, 49 and 67, which accompany and form a part of this specification for the types indicated. Illustrations shown on these sheets are indicative of the general type desired and are not intended to restrict selection to fixtures of any particular manufacturer. Fixtures of similar designs and equivalent energy efficiency, light distribution and brightness characteristics, and of equal finish and quality will be acceptable if approved. In suspended acoustical ceilings with fluorescent fixtures, the fluorescent emergency light fixtures shall be furnished with self-contained battery packs.

3.12.2.1 Accessories: Accessories such as straps, mounting plates, nipples, or brackets shall be provided for proper installation. Open type fluorescent fixtures with exposed lamps shall have a wire-basket type guard.

3.12.2.2 Suspended Fixtures: Suspended fixtures shall be provided with swivel hangers in order to ensure a plumb installation. Pendants, rods, or chains 1.2 meters (4 feet) or longer excluding fixture, shall be braced to limit swinging. Bracing shall be 3 directional, 120 degrees apart. Single unit suspended fluorescent fixtures shall have twin-stem hangers. Multiple unit or continuous-row fluorescent units shall have a tubing or stem for wiring at one point, and a tubing or rod suspension provided for each length of chassis including one at each end. Maximum distance between adjacent tubing or stems shall be 3.1 meters (10 feet). Rods shall be of not less than 3/16 inch diameter. Flexible raceway shall be installed to each fixture from an overhead junction box. Fixture to fixture wiring installation is allowed only when fixtures are installed end to end in a continuous run.

3.12.2.3 Ceiling Fixtures: Ceiling fixtures shall be coordinated with and suitable for installation in, on, or from the suspended ceiling provided under other sections of these specifications. Installation and support of fixtures shall be in accordance with the NFPA 70 and manufacturer's recommendations. Where seismic requirements are specified herein, fixtures shall be supported as shown or specified. Recessed fixtures shall have adjustable fittings to permit alignment with ceiling panels. Recessed fixtures installed in fire-resistive type of suspended ceiling construction shall have the same fire rating as the ceiling or shall be provided with fireproofing boxes having materials of the same fire rating as the ceiling panels, in conformance with UL-03. Surface-mounted fixtures shall be suitable for fastening to the structural support for ceiling panels.

3.12.2.4 Sockets: Sockets of industrial, strip, and other open type fluorescent fixtures shall be of the type requiring a forced movement along the longitudinal axis of the lamp for insertion and removal of the lamp.

3.12.3 Emergency Light Sets: Emergency light sets shall conform to UL 924 with the number of heads as indicated. Sets shall be permanently connected to the wiring system by conductors installed in short lengths of flexible conduit.

3.13 BATTERY CHARGERS: Battery chargers shall be installed in conformance with NFPA 70.

3.14 EQUIPMENT CONNECTIONS: All wiring not furnished and installed under other sections of the specifications for the connection of electrical equipment as indicated on the drawings shall be furnished and installed under this section of the specifications. Connections shall comply with the applicable requirements of paragraph WIRING METHODS. Flexible conduits 2 m 6 feet or less in length shall be provided to all electrical equipment subject to periodic removal, vibration, or movement and for all motors. All motors shall be provided with separate grounding conductors. Liquid-tight conduits shall be used in damp or wet locations.

3.14.1 Motors and Motor Control: Control equipment furnished under this section of the specifications, and shown on the drawings, shall be connected under this section of the specifications unless shown or specified otherwise. Except as otherwise specifically noted, automatic-control wiring, signaling, and protective devices are not included in this section of the specifications, but shall be furnished and installed under other sections of the specifications. Control wiring not shown on the drawings shall be furnished under the other sections of the specifications.

3.15 TELEPHONE WIRING SYSTEM: The telephone wiring system shall be complete and functional.

3.15.1 It is the responsibility of the Contractor to maintain diligence of the TIA/EIA standards during the project. Performance Grading, Quality Band distinction when the TIA/EIA Communications Standards are updated.

3.15.2 The following type of cable shall be used.

a. Four-pair 100Ω, 24 American Wire Gauge (AWG), UTP cable, with all 4 pairs (4XO) insulated with 100 percent Fluorinated Ethylene Propylene (FEP), specified to handle transmission speeds at a minimum of 100 MHz, Category 5 rated, and marked accordingly. There shall not be any mixed dielectric insulation on the conductors. Plenum and non-plenum cable shall be used, where appropriate, for horizontal and backbone cabling installations.

b. There shall be a minimum of two, Category 5 rated, UTP cables placed within each telecommunications conduit. Each UTP cable shall have one end terminated to the outlet and one end terminated to the Category 5 rated patch panel, per specifications.

3.15.3 All connecting hardware is to meet, at minimum, all Category 5 performance rating requirements and be marked accordingly by the manufacturer. All items must have submittal sheets, showing compliance, provided to 30 CS/SCXP and SCMTS for approval before purchase.

3.15.4 All outlets shall be Category 5 rated and will have a minimum of a two-port faceplate with modular outlet jack inserts installed with 8-pin, 8-position, RJ-45 type and color-coded, 110-type, Insulation Displacement Connection (IDC) connectors conforming to the T568B wiring configuration listed in TIA/EIA-568-A. The faceplate shall also have a built-in cover for label inserts. It is necessary that a plug-in style outlet and modular jack assembly, one that snaps into the outlet, be installed that will accept 4-pin, 6-position, RJ-11 type and 8-pin, 8-position, RJ-45 type connectors without causing damage to the outlet jack.

3.15.5 UTP, Category 5 rated, 19 inch patch panels hall be installed configured to the T568B wiring configuration listed in TIA/EIA-568-A, with an attached wire management device. The front panel shall consist of 8-pin, 8-position, RJ-45 connections. The rear panel shall consist of color-coded, 110-type, IDC connections conforming to the T568B wiring configuration listed in TIA/EIA-568-A. The rear of the patch panel shall have a wire management system installed for the proper routing of installed cables. A wire management system shall also be installed between each installed patch panel for proper routing of patch cords. The required patch panels shall have a minimum of 48 ports, but must provide at least 20 percent expansion capability, sized in respect to the amount of cables terminated to the patch panel. There shall also be a duplicate patch panel installed, meeting the same requirements as the first, for telecommunications interface.

3.15.5.1 Wall or rack mounted patch panel equipment for mounting the telecommunications patch panel shall be acceptable. The patch panel mounting equipment will be of the same manufacturing company as the patch panel. The equipment shall also contain wire management devices for proper routing of installed wiring.

3.15.5.2 All communications patch panel patch cords shall be stranded 24 AWG, Category 5 rated, and wired to the T568B configuration complying with TIA/EIA-568-A and color-coded in accordance with TIA/EIA-606.

3.15.6 Telecommunications Room/entrance Facility. A 3/4 inch conduit shall be provided from the equipment room to the main building grounding electrode. A #6 AWG copper ground wire shall be connected to a grounding busbar from the main building grounding electrode in compliance with TIA/EIA-607. Labeling shall comply with TIA/EIA-606.

3.15.6.1 A service entrance pathway shall be provided for base cable. The minimum size of this pathway shall consist of 4-inch conduit. A minimum of three 4-inch conduits shall be provided from the entrance facility, with a minimum bend radii of 10 times the inside diameter of the conduit. One of these conduits

shall have three 1 1/4-inch inner ducts installed. The other conduit(s) shall contain a 1/4 inch pull rope. Bends in conduit shall be limited to the equivalent of no more than two 90-degree bends. Installation shall be in compliance with EIA/TIA-569.

3.15.7 Conduit to Outlets. Conduit runs shall be placed at every point where an electrical outlet is installed in the facility, excluding the restrooms and the telecommunications room/entrance facility. It is mandatory that the telecommunications conduit runs be located on the opposite side of the same stud as the electrical outlet.

3.15.7.1 All installed conduit runs shall be limited to the equivalent of no more than two 90-degree bends. The inside radius of a bend in conduit shall be at least 6 times the internal diameter. When the conduit size is 2 inches or greater, the inside radius shall be at least 10 times the internal diameter of the conduit. For fiber optic cabling, the inside radius of a bend shall always be at least 10 times the internal diameter of the conduit.

3.15.7.2 All conduits installed to outlets shall be 3/4 inch with no more than 1 50 percent fill ration.

3.15.7.3 All conduits shall be installed in compliance with TIA/EIA-568-A, EIA/TIA-569, TIA-EIA-606, TIA/EIA-607.

3.15.7.4 It will be acceptable to install a ventilated cable ladder rack system for the horizontal and backbone cabling ceiling pathway. The cable tray must comply with TIA/EIA/568-A, EIA/TIA-569, TIA/EIA-606, TIA/EIA 607, and all other applicable local and state laws. A specification sheet listing manufacturer, part number, description, compliance to regulations/specifications, and photo shall be supplied to 30 CS/SCMTS for approval before purchase.

3.15.8 Installation:

3.15.8.1 All outlets will consist of a minimum of 2 UTP, Category 5 rated, FEP insulated cable runs, terminated conforming to the T568B wiring configuration listed in TIA/EIA-568-A.

a. Outlets: It is mandatory that the outlet be located on the opposite side of the same stud as the electrical outlet.

3.15.8.2 The connecting hardware used for UTP cabling shall be installed to provide minimal signal impairment by preserving wire pair twists as closely as possible to the point of mechanical termination. The amount of untwisting in a pair as a result of termination to connecting hardware shall be no greater than 1/2 inch for Category 5 cables.

3.15.8.3 All cable runs shall be run in compliance with TIA/EIA-568-A and EIA/TIA-569. All cabling runs shall have one side terminated to the outlet and one side terminated to the appropriate patch panel.

3.15.8.4 All cable runs shall be tested to the accuracy level II requirements described in TIA/EIA TSB 67. All testing shall be performed by an experienced installer, as defined in section 8, Qualifications/Certification. Testing, at a minimum, shall consist of wire map, length, attenuation, and near-end crosstalk (NEXT) loss. There shall not be any defective pairs in the final installation of the telecommunications cabling. Testing shall be performed for channel and basic link configurations in the presence of and/or verified by knowledgeable 30th Communications Squadron personnel. Contact 30 CS/SCMTS for assistance.

3.15.8.5 The cabling system shall be installed to provide color coding, labeling, and documentation in compliance with TIA/EIA-606. A copy of all documentation, to include as-built shop drawings and floor plans with conduits, cabling routes, installed equipment, and specified interconnections between old and new systems, shall be provided to 30 CS/SCXP and SCMTS personnel. A floor plan showing the

facility's final cable distribution runs, with associated labeling, shall be left in the telecommunications room (s).

3.15.8.6 All telecommunications cabling, hardware, and associated end equipment, required for a fully functional telecommunications system, shall be provided by the Contractor. As a minimum, experienced installers who are very familiar with the precautions, requirements, and standards in this document, shall be required to install all telecommunications cabling, hardware, and associated end equipment. All "experienced" installers shall meet the minimum requirements listed in section 8, Qualifications/Certification.

3.15.8.7 Qualifications/Certification:

a. The experienced installer is the contractor or an entity engaged by the contractor, as an employee, subcontractor, or sub-subcontractor for performance of a particular installation, application, or activity. an experienced installer shall also be defined as one having satisfactorily completed a minimum of five previous projects, similar in size to this project, and familiar with the precautions required, and with requirements of the authority having jurisdiction.

b. The experienced installer shall also have qualifications of a certified Category 5 and/or fiber optic cabling technician, based on the cabling required for the given project. Documentation of qualifications and test equipment proficiency shall be provided to 30 CS/SCXP and SCMTS before installation of any telecommunications cabling, hardware, or equipment.

3.16 PAINTING AND FINISHING: Field-applied paint on exposed surfaces shall be provided under Section 09900 PAINTING, GENERAL.

3.17 REPAIR OF EXISTING WORK: The work shall be carefully laid out in advance, and where cutting, channeling, chasing, or drilling of floors, walls, partitions, ceiling, or other surfaces is necessary for the proper installation, support, or anchorage of the conduit, raceways, or other electrical work, this work shall be carefully done, and any damage to building, piping, or equipment shall be repaired by skilled mechanics of the trades involved, at no additional cost to the Government.

3.18 TESTS: After the interior-wiring-system installation is completed, and at such time as the Contracting Officer may direct, the Contractor shall conduct an operating test for approval. The equipment shall be demonstrated to operate in accordance with the requirements of this specification. Continuity test shall be conducted on the telephone wiring system. The test shall be performed in the presence of the Contracting Officer. The Contractor shall furnish all instruments and personnel required for the tests, and the Government will furnish the necessary electric power. No part of the electrical distribution system shall be energized prior to the resistance testing of that system's ground rods and submission of test results to the Contracting Officer. Test reports shall indicate the location of the rod and the resistance and the soil conditions at the time the test was performed.

3.19 ONE-LINE DIAGRAM: A one-line diagram with main transformer, building disconnect means, and feeder breakers/switches to building panels located at the building disconnect shall be provided. Diagram shall be mounted under glass or shall be plastic laminated. The breaker/switch identification on the diagram shall match nameplate on the installed equipment.

-- End of Section --

INDEX

SECTION 16721

FIRE DETECTION AND ALARM SYSTEM

Paragraph		Page
1.1	REFERENCES	16721-1
1.2	GENERAL REQUIREMENTS	16721-1
1.3	SYSTEM DESIGN	16721-2
1.4	SUBMITTALS	16721-3
1.5	DELIVERY AND STORAGE	16721-5
2.1	CONTROL PANEL	16721-5
2.2	STORAGE BATTERIES	16721-6
2.3	BATTERY CHARGER	16721-6
2.4	MANUAL FIRE ALARM STATIONS	16721-6
2.5	FIRE DETECTING DEVICES	16721-6
2.6	NOTIFICATION APPLIANCES	16721-7
2.7	FIRE DETECTION AND ALARM SYSTEM PERIPHERAL EQUIPMENT	16721-7
3.1	INSTALLATION	16721-7
3.2	OVERVOLTAGE AND SURGE PROTECTION	16721-8
3.3	GROUNDING	16721-8
3.4	TESTING	16721-8
3.5	TRAINING	16721-9

SECTION 16721

FIRE DETECTION AND ALARM SYSTEM

PART 1 GENERAL

1.1 REFERENCES: The publications listed below form a part of this specification to the extent referenced. The publications are referred to in the text by basic designation only.

INSTITUTE OF ELECTRICAL AND ELECTRONICS ENGINEERS (IEEE)

IEEE C62.41	(1991) Surge Voltages in Low-Voltage AC Power Circuits

NATIONAL FIRE PROTECTION ASSOCIATION (NFPA)

NFPA 70	(1993) National Electrical Code
NFPA 72	(1993) National Fire Alarm Code
NFPA 90A	(1993) Installation of Air Conditioning and Ventilating Systems

UNDERWRITERS LABORATORIES (UL)

UL-04	(1994) Fire Protection Equipment Directory
UL 38	(1994; Rev Jan 1994) Manually Actuated Signaling Boxes for Use with Fire-Protective Signaling Systems
UL 268	(1989; Rev May 1989) Smoke Detectors for Fire Protective Signaling Systems
UL 464	(1990) Audible Signal Appliances
UL 521	(1993) Heat Detectors for Fire Protective Signaling Systems
UL 864	(1991; Rev thru May 1994) Control Units for Fire-Protective Signaling Systems

1.2 GENERAL REQUIREMENTS

1.2.1 Standard Products: All equipment shall be Radionics brand and be suitable for operation with connected equipment at the Base. Material and equipment shall be the standard products of a manufacturer regularly engaged in the manufacture of the products and shall be items that have been in satisfactory use for at least 2 years prior to bid opening. Equipment shall be supported by a service organization that can provide service within 24 hours.

1.2.2 Nameplates: Major components of equipment shall have the manufacturer's name, address, type or style, voltage and current rating, and catalog number on a noncorrosive and nonheat-sensitive plate which is securely attached to the equipment.

1.2.3 Keys and Locks: Locks shall be keyed alike.

1.2.4 Tags: Tags with stamped identification number shall be furnished for keys and locks.

1.2.5 Verification of Dimensions: The Contractor shall become familiar with all details of the work, verify all dimensions in the field, and shall advise the Contracting Officer of any discrepancy before performing the work.

1.2.6 Compliance: The fire detection and internal alarm system and the central reporting system shall be configured in accordance with NFPA 72. The equipment furnished shall be compatible and be UL listed or FM approved or approved or listed by a nationally recognized testing laboratory in accordance with the applicable NFPA standards.

1.2.7 Manufacturer's Services: Services of a manufacturer's representative who is experienced in the installation, adjustment, testing, and operation of the equipment specified shall be provided. The representative shall supervise the installation, adjustment, and testing of the equipment.

1.3 SYSTEM DESIGN

1.3.1 Operation

The fire alarm and detection system shall be a complete, supervised fire alarm system. The system shall be activated into the alarm mode by actuation of any alarm initiating device. The system shall remain in the alarm mode until initiating device is reset and the fire alarm control panel is reset and restored to normal. Alarm initiating devices shall be connected to initiating device circuits (IDC), Style D, or to signal line circuits (SLC), Style 6 in accordance with NFPA 72. Alarm indicating appliances shall be connected to indicating appliance circuits (IAC), Style Z in accordance with NFPA 72. A two-loop conduit system shall be provided so that if any one conduit and all conductors contained in that conduit are severed all IDC, IAC, or SLC on that circuit shall remain functional. A two-loop system is not applicable to the central fire alarm communication center from the local panels. All textual, audible, and visual appliances and systems shall comply with NFPA 72. Addressable system shall be microcomputer (microprocessor or microcontroller) based with a minimum word size of eight bits.

a. Sufficient memory shall be provided to perform as specified and as shown for addressable system.

b. Individual identity of each addressable device shall be provided for the following conditions:

   alarm
   trouble
   open
   short
   appliances missing/failed
   remote detector - sensitivity adjustment from the panel for smoke detectors

c. All addressable devices shall have the capability of individually being disabled or enabled from the panel.

1.3.2 Operational Features: The system shall have the following operating features:

a. Electrical supervision of alarm IDC, SLC and IAC.

b. Electrical supervision of the primary power (ac) supply, battery voltage, placement of alarm zone module (card, PC board) within the control panel, and transmitter tripping circuit integrity.

c. Trouble buzzer and trouble lamp (light emitting diode or neon light) to activate upon a single break, open, or ground fault condition which prevents the required normal operation of the system. The trouble signal shall also operate upon loss of primary power (ac) supply, low battery voltage, removal of alarm zone module (card, PC board), and disconnection of the circuit used for

transmitting alarm signals off-premises. A trouble alarm silence switch shall be provided which will silence the trouble buzzer, but will not extinguish the trouble indicator lamp. After the system returns to normal operating conditions, the trouble buzzer shall again sound until the silencing switch returns to normal position, unless automatic trouble reset is provided.

d. Transmitter disconnect switch to allow testing and maintenance of the system without activating the transmitter but shall provide a trouble signal when disconnected and a restoration signal when reconnected.

e. Evacuation alarm silencing switch or switches which, when activated, will silence alarm devices, but will not affect the zone indicating lamp nor the operation of the transmitter. This switch shall be over-ridden upon activation of a subsequent alarm from an unalarmed zone and the alarm devices will be activated.

f. Electrical supervision of circuits used for supervisory signal services. Supervision shall detect any open, short, or ground.

g. Zones for alarm shall be arranged as indicated on the contract drawings.

1.3.3 Alarm Functions: An alarm condition on a circuit shall automatically initiate the following functions:

a. Transmission of signals over the station telephonic fire reporting system.

b. Visual indications of the alarmed zones on the fire alarm control panel annunciator.

c. Continuous sounding of alarm notification appliances throughout the building.

d. Deactivation of the air handling units throughout the building.

1.3.4 Primary Power: Operating power shall be provided as required by paragraph Power Supply for the System. Transfer from normal to emergency power or restoration from emergency to normal power shall be fully automatic and not cause transmission of a false alarm. Loss of ac power shall not prevent transmission of a signal via the fire reporting system upon operation of any initiating circuit.

1.3.5 Battery Backup Power: Battery backup power shall be through use of rechargeable, sealed-type storage batteries and battery charger.

1.4 SUBMITTALS: Government approval is required for submittals with a "GA" designation; submittals having an "FI0" designation are for information only. The following shall be submitted in accordance with Section 01300 SUBMITTAL PROCEDURES:

SD-01 Data

Battery; GA.

Substantiating battery calculations for supervisory and alarm power requirements. Ampere-hour requirements for each system component and each panel component, and the battery recharging period shall be included.

Voltage Drop; GA.

Voltage drop calculations for signaling appliance circuits to indicate that sufficient voltage is available for proper appliance operation.

Spare Parts; GA.

Spare parts data for each different item of material and equipment specified, not later than 1 month prior to the date of beneficial occupancy. Data shall include a complete list of parts and supplies with the current unit prices and source of supply and a list of the parts recommended by the manufacturer to be replaced after 1 year of service.

Qualifications; FIO.

Qualifications, with verification of experience and license number, of a Registered Professional Engineer with at least 4 years of current experience in the design of the fire protection and detection systems. This engineer must perform the various specification items required by this section to be performed by a registered Professional Engineer.

SD-04 Drawings

Fire Alarm Reporting System; GA.

Detail drawings, signed by the Registered Professional Engineer, consisting of a complete list of equipment and material, including manufacturer's descriptive and technical literature, catalog cuts, and installation instructions. Note that the contract drawings show layouts based on typical detectors. The contractor shall check the layout based on the actual detectors to be installed and make any necessary revisions in the detail drawings. The detail drawings shall also contain complete wiring and schematic diagrams for the equipment furnished, equipment layout, and any other details required to demonstrate that the system has been coordinated and will properly function as a unit.

Detailed point-to-point wiring diagram, signed by the Registered Professional Engineer, showing all points of connection. Diagram shall include connections between system devices, appliances, control panels, supervised devices, and all equipment that is activated or controlled by the panel.

SD-06 Instructions

Fire Alarm Reporting System; GA.

Six copies of operating instructions outlining step-by-step procedures required for system startup, operation, and shutdown. The instructions shall include the manufacturer's name, model number, service manual, parts list, and brief description of all equipment and their basic operating features. Six copies of maintenance instructions listing routine maintenance procedures, possible breakdowns and repairs, and troubleshooting guide. The instructions shall include conduit layout, equipment layout and simplified wiring, and control diagrams of the system as installed. Instructions shall be approved prior to training.

SD-08 Statements

Test Procedures; FIO.

Detailed test procedures, signed by the Registered Professional Engineer, for the fire detection and alarm system 60 days prior to performing system tests.

SD-09 Reports

Testing; GA.

Test reports in booklet form showing all field tests performed to prove compliance with the specified performance criteria, upon completion and testing of the installed system. Each test report shall document all readings, test results and indicate the final position of controls.

SD-13 Certificates

Equipment; FIO.

Certified copies of current approvals or listings issued by UL, FM or other nationally recognized testing laboratory, showing compliance with specified NFPA standards.

Installer; FIO.

The Contractor shall provide documentation demonstrating that its fire detection and alarm system installer has been regularly engaged in the installation of fire detection and alarm systems meeting NFPA standards for a minimum of three years immediately preceding commencement of this contract. Such documentation shall specifically include proof of satisfactory performance on at least three projects similar to that required by these specifications, including the names and telephone numbers of using agency points of contact for each of these projects. Documentation shall indicate the type of each system installed and include a written certificate that each system has performed satisfactorily in the manner specified for a period of not less than 12 months following completion. All such data shall be submitted 30 days prior to commencement of installation for approval of the Contracting Officer. Listing of the installer under "Protective Signaling Services - Local, Auxiliary, Remote Station Proprietary (UUJS)" of UL-04 shall be accepted as equivalent proof of compliance with the foregoing experience requirements.

1.5 DELIVERY AND STORAGE: All equipment delivered and placed in storage shall be stored with protection from the weather, humidity and temperature variation, dirt and dust, and any other contaminants.

PART 2 PRODUCTS

2.1 CONTROL PANEL: Control Panel shall comply with all the applicable requirements of UL 864. Panel shall be modular, installed in a surface mounted steel cabinet with hinged door and cylinder lock. Control panel shall be a clean, uncluttered, and orderly assembled panel containing all components and equipment required to provide the specified operating and supervisory functions of the system. The panel shall have prominent rigid plastic, phenolic or metal identification plates for all lamps, zones, controls, meters, fuses, and switches. Nameplates for fuses shall also include ampere rating. Separate alarm and trouble lamp shall be provided for each zone alarm located on exterior of cabinet door or be visible through the cabinet door. Control panel switches shall be within the locked cabinet. A suitable means shall be provided for testing the control panel visual indicating devices (meters or lamps). Meters and lamps shall be plainly visible when the cabinet door is closed. Signals shall be provided to indicate by zone any alarm, supervisory or trouble condition on the system. Each initiating circuit shall be powered and supervised so that a signal on one zone does not prevent the receipt of signals from other zones. Loss of power, including any or all batteries, shall not require the reloading of a program. Upon restoration of power, startup shall be automatic, and shall not require any manual operation. The loss of primary power or the sequence of applying primary or emergency power shall not affect the transmission of alarm, supervisory or trouble signals.

2.1.1 Visual Annunciators: Visual annunciators shall be provided for each active zone and spare zone. Four spare zones shall be provided. Each lamp shall provide specific identification of the zone by means of a permanently attached rigid plastic, phenolic or metal sign with either raised or engraved letters. Zone identification shall consist of word description of the zone.

2.1.2 Cabinets: Cabinets shall be provided with ample gutter space to allow proper clearance between the cabinet and live parts of the panel equipment. If more than one modular unit is required to form a control panel, the units shall be installed in a single cabinet large enough to accommodate all units. Cabinets shall be painted red.

2.1.3 Remote System Trouble Audible/Visual Appliance: Audible appliance shall have a minimum sound level output rating of 85 dBA at 10 feet and operate in conjunction with the panel's integral trouble signal. The audible device shall be silenced by the system trouble silence switch. A rigid plastic, phenolic or metal identification sign which reads "Fire Alarm System Trouble" shall be provided at the audible appliance. The visual appliance located with the audible appliance shall not be extinguished until the trouble has been cleared.

2.1.4 Circuit Connections: Circuit conductors entering or leaving the panel shall be connected to screw-type terminals with each terminal marked for identification.

2.2 STORAGE BATTERIES: Storage Batteries shall be provided and shall be the sealed, lead-calcium type requiring no additional water. The batteries shall have ample capacity, with primary power disconnected, to operate the fire alarm system for a period of 48 hours. Following this period of operation via batteries, the batteries shall have ample capacity to operate all components of the system, including all alarm signaling devices in the total alarm mode for a minimum period of 15 minutes. Batteries shall be sized to deliver 50 percent more ampere/hours based on a 48 hour discharged rate than required for the calculated capacities. Battery cabinet shall be a separate compartment within the control panel. Batteries in the control panel shall be located at the bottom of the panel. Battery shall be provided with overcurrent protection in accordance with NFPA 72.

2.3 BATTERY CHARGER: Battery charger shall be completely automatic, with high/low charging rate, capable of restoring the batteries from full discharge to full charge within 12 hours. A separate ammeter shall be provided for indicating rate of charge. A separate voltmeter shall be provided to indicate the state of the battery charge. A pilot light indicating when batteries are manually placed on a high rate of charge shall be provided as part of the unit assembly if a high rate switch is provided. Charger shall be located in control panel or battery cabinet.

2.4 MANUAL FIRE ALARM STATIONS: Manual fire alarm stations shall conform to the applicable requirements of UL 38. Manual stations shall be connected into alarm-initiating circuits. Stations shall be installed on surface or semi-flush mounted outlet boxes. Stations shall be double action type. Stations shall be finished in red, with raised letter operating instructions of contrasting color. Stations requiring the breaking of glass or plastic panels for operation are not acceptable. Stations employing glass rods are not acceptable. The use of a key or wrench shall be required to reset the station. Gravity or mercury switches are not acceptable. Switches and contacts shall be rated for the voltage and current upon which they operate. Stations shall have a separate screw terminal for each conductor. Surface mounted boxes shall be painted the same color as the fire alarm manual stations. Addressable pull stations shall be capable of being field programmed, shall latch upon operation and remain latched until manually reset.

2.5 FIRE DETECTING DEVICES: Fire detecting devices shall comply with the applicable requirements of NFPA 72, NFPA 90A, UL 268, and UL 521. The detectors shall be provided as indicated. Detector base shall have screw terminals for making connections. No solder connections will be allowed. Detectors shall be connected into alarm initiating circuits. Detectors located in concealed locations (above ceiling, etc.) shall have a remote visible indicator lamp. Installed devices shall conform to the classification of the area. Addressable fire detecting devices except flame detectors shall be dynamically supervised and uniquely identified in the control panel.

2.5.1 Heat Detectors: Heat detectors shall be designed for detection of fire by combination fixed temperature and rate-of-rise principle. Heat detectors shall be rated for a minimum of 50 foot spacing (smooth-ceiling rated) in accordance with UL 521. Detectors located in areas subject to moisture, exterior

atmospheric conditions or hazardous locations as defined by NFPA 70, shall be types approved for such locations. Heat detectors located in attic spaces or similar concealed spaces below the roof shall be intermediate temperature rated.

2.5.1.1 Combination Fixed-Temperature and Rate-of-Rise Detectors: Detectors shall be designed for surface or semi-flush outlet box mounting and supported independently of wiring connections. Contacts shall be self-resetting after response to rate-of-rise principle. Under fixed temperature actuation, the detector shall have a permanent external indication which is readily visible. Detector units located in boiler rooms, showers, or other areas subject to abnormal temperature changes shall operate on fixed temperature principle only. Rating for fixed temperature portion shall be 135 degrees F in temperature conditioned spaces.

2.5.2.1 Duct Detectors: Duct detectors are provided under Section 15950 Heating, Ventilation, and Air Conditioning HVAC Control Systems.

2.6 NOTIFICATION APPLIANCES: Audible appliances shall be heavy duty and conform to the applicable requirements of UL 464. Devices shall be connected into alarm indicating circuits and shall have a separate screw terminal for each conductor. Devices shall be painted red.

2.6.1 Alarm Horns: Horns shall be surface mounted, with the matching mounting back box surface mounted or recessed vibrating type suitable for use in an electrically supervised circuit. Horns shall produce a minimum sound rating of at least 85 dBA at 10 feet. Horns used in exterior locations shall be specifically listed or approved for outdoor use and be provided with metal housing and protective grills.

2.6.2 Visual Notification Appliances: Visual notification appliances shall have high intensity optic lens and flash tubes. Strobes shall flash at approximately 1 flash per second and a minimum of 1 candela (8,000 peak candle power).

2.6.3 Combination Audible/Visual Notification Appliances: Combination audible/visual notification appliances shall provide the same requirements as individual units except they shall mount as a unit in standard backboxes. All units shall be factory assembled. Any other audible indicating appliance employed in the fire alarm systems shall be approved by the authority having jurisdiction.

2.7 FIRE DETECTION AND ALARM SYSTEM PERIPHERAL EQUIPMENT

2.7.1 Wiring: Wiring for 120V ac power shall be No. 12 AWG minimum. Wiring for low voltage dc circuits shall be No. 16 AWG minimum. Power wiring (over 28 volts) and control wiring shall be isolated. All wiring shall conform to NFPA 70. System field wiring shall be solid copper and installed in metallic conduit or electrical metallic tubing, except rigid plastic conduit may be used under slab-on-grade. All conductors shall be color coded. Conductors used for the same functions shall be similarly color coded. Wiring code color shall remain uniform throughout the circuit. Pigtail or T-tap connections to alarm initiating, supervisory circuits, and alarm indicating circuits are prohibited. T-tapping using screw terminal blocks is allowed for addressable systems.

2.7.2 Special Tools and Spare Parts: Special tools necessary for the maintenance of the equipment shall be furnished. Two spare fuses of each type and size required and five spare lamps and LED's of each type shall be furnished. Two percent of the total number of each different type of detector, but no less than two each, shall be furnished. Fuses and lamps shall be mounted in the fire alarm panel.

PART 3 EXECUTION

3.1 INSTALLATION: All work shall be installed as shown and in accordance with the manufacturer's diagrams and recommendations, unless otherwise specified.

3.1.1 Power Supply for the System: A single dedicated circuit connection for supplying power to each building fire alarm system shall be provided. The primary power shall be supplied as shown on the drawings. The power supply shall be equipped with a locking mechanism and marked "FIRE ALARM CIRCUIT CONTROL".

3.1.2 Wiring: Conduit size for wiring shall be in accordance with NFPA 70. Wiring for the fire alarm system shall not be installed in conduits, junction boxes, or outlet boxes with conductors of lighting and power systems. No more than one conductor shall be installed under any screw terminal. All circuit conductors entering or leaving any mounting box, outlet box enclosure or cabinet shall be connected to screw terminals with each terminal marked in accordance with the wiring diagram. Connections and splices shall be made using screw terminal blocks. The use of wire nut type connectors are prohibited in the system. Wiring within any control equipment shall be readily accessible without removing any component parts. The fire alarm equipment manufacturer's representative shall be present for the connection of wiring to the control panel.

3.1.3 Control Panel: The control panel and its assorted components shall be mounted so that no part of the enclosing cabinet is less than 12 inches nor more than 78 inches above the finished floor. All manually operable controls shall be between 36 inches to 42 inches above the finished floor. Panel shall be installed to comply with the requirements of UL 864.

3.1.4 Detectors: Detectors shall be installed in accordance with NFPA 72. Detectors shall be at least 12 inches from any part of any lighting fixture. Detectors shall be located at least 3 feet from diffusers of air handling systems. Each detector shall be provided with appropriate mounting hardware as required by its mounting location. Detectors which mount in free space shall be mounted directly to the end of the stubbed down rigid conduit drop. Conduit drops shall be firmly secured to minimize detector sway. Where length of conduit drop from ceiling or wall surface exceeds 3 feet, sway bracing shall be provided.

3.1.5 Notification Appliances: Notification appliances shall be mounted a minimum of 8 feet above the finished floor unless limited by ceiling height or otherwise indicated.

3.1.6 Annunciator Equipment: Annunciator equipment provided shall be mounted where indicated.

3.2 OVERVOLTAGE AND SURGE PROTECTION: All equipment connected to alternating current circuits shall be protected from surges per IEEE C62.41 and NFPA 70. All cables and conductors which serve as communications links, except fiber optics, shall have surge protection circuits installed at each end. Fuses shall not be used for surge protection.

3.3 GROUNDING: Grounding shall be provided to building ground or ground rods shall be driven. Maximum impedance to ground shall be 25 ohms. Ground rods shall not protrude more than 6 inches above grade.

3.4 TESTING: The Contractor shall notify the Contracting Officer 30 days before the preliminary and acceptance tests are to be conducted. The tests shall be performed in accordance with the approved test procedures in the presence of the Contracting Officer. The control panel manufacturer's representative shall be present to supervise all tests. The Contractor shall furnish all instruments and personnel required for the tests.

3.4.1 Preliminary Tests: Upon completion of the installation, the system shall be subjected to functional and operational performance tests including tests of each installed initiating and notification appliance. Tests shall include the meggering of all system conductors to determine that the system is free from grounded, shorted, or open circuits. The megger test shall be conducted prior to the installation of fire alarm equipment. If deficiencies are found, corrections shall be made and the system shall be retested to assure that it is functional.

3.4.2 Acceptance Test: Testing shall be in accordance with NFPA 72. The recommended tests in NFPA 72 shall be considered mandatory and shall verify that all previous deficiencies have been corrected. The test shall include the following:

a. Test of each function of the control panel.

b. Test of each circuit in both trouble and normal modes.

c. Tests of alarm initiating devices in both normal and trouble conditions.

d. Tests of each control circuit and device.

e. Tests of each alarm notification appliance.

f. Tests of the battery charger and batteries.

g. Complete operational tests under emergency power supply.

h. Visual inspection of all wiring connections.

i. Opening the circuit at each alarm initiating device and notification appliance to test the wiring supervisory feature.

j. Ground fault

k. Short circuit faults

l. Stray voltage

m. Loop resistance

3.5 TRAINING: Training course shall be provided for the operations and maintenance staff. The course shall be conducted in the building where the system is installed or as designated by the Contracting Officer. The training period shall consist of 3 training days (8 hours per day) and shall start after the system is functionally completed but prior to final acceptance tests. The instructions shall cover all of the items contained in the operating and maintenance instructions.

-- End of Section --

INDEX

SECTION 16725

INTRUSION DETECTION SYSTEMS

Paragraph		Page
1.1	REFERENCES	16725-1
1.2	SYSTEM DESCRIPTION	16725-1
1.3	DELIVERY OF TECHNICAL DATA AND COMPUTER SOFTWARE	16725-3
1.4	TESTING	16725-3
1.5	MAINTENANCE AND SERVICE	16725-3
2.1	GENERAL REQUIREMENTS	16725-3
2.2	INTERIOR SENSORS	16725-6
2.3	ELECTRONIC ENTRY SYSTEM CONTROL AND INTERCONNECTION TO BASE SUBSYSTEM	16725-6
2.4	WIRE AND CABLE	16725-6
2.5	PREDELIVERY TESTING	16725-7
3.1	GENERAL	16725-7
3.2	SYSTEM STARTUP	16725-8
3.3	SITE TESTING	16725-8

SECTION 16725

INTRUSION DETECTION SYSTEMS

PART 1 GENERAL

1.1 REFERENCES

The publications listed below form a part of this specification to the extent referenced. The publications are referred to in the text by basic designation only.

AMERICAN NATIONAL STANDARDS INSTITUTE (ANSI)

ANSI C2 (1993) National Electrical Safety Code

CODE OF FEDERAL REGULATIONS (CFR)

47 CFR 15 Radio Frequency Devices

INSTITUTE OF ELECTRICAL AND ELECTRONICS ENGINEERS (IEEE)

IEEE C62.41 (1991) Surge Voltages in Low-Voltage AC Power Circuits

IEEE Std 100 (1992) IEEE Standard Dictionary of Electrical and Electronics Terms

IEEE Std 142 (1991) IEEE Recommended Practice for Grounding of Industrial and Commercial Power Systems

NATIONAL ELECTRICAL MANUFACTURERS ASSOCIATION (NEMA)

NEMA 250 (1991) Enclosures for Electrical Equipment (1000 Volts Maximum)

NEMA ICS 1 (1993) Industrial Controls and Systems

NATIONAL FIRE PROTECTION ASSOCIATION (NFPA)

NFPA 70 (1993) National Electrical Code

UNDERWRITERS LABORATORIES (UL)

UL 6 (1993) Rigid Metal Conduit

UL 796 (1993) Printed-Wiring Boards

1.2 SYSTEM DESCRIPTION

1.2.1 General: System shall detect intrusion to the building and report detection to the Base Security system via transponder and telephone line. The Contractor shall configure the Intrusion Detection System (IDS) as described and shown. The system shall provide operator interaction and dynamic process manipulation, including overall system supervision, and control. Alarm data shall be obtained from local processors which are located within the protected zone.

1.2.2 Overall System Reliability Requirement: The system, including all components and appurtenances, shall be configured and installed to yield a mean time between failure (MTBF), as defined in IEEE Std 100, of at least 2000 hours continuous operation. Mean time between failure shall be calculated based on the configuration specified in paragraph Overall System Reliability Calculations.

1.2.3 Alarm Classifications

1.2.3.1 Intrusion Alarm: The annunciation of an alarm resulting from the detection of a specified target and which represents an attempt to intrude into the protected area.

1.2.3.2 Nuisance Alarm: The annunciation of an alarm resulting from the detection of an alarm stimuli but which does not represent an attempt to intrude into the protected area.

1.2.3.3 Environmental Alarm: The annunciation of an alarm resulting from environmental conditions which exceed those specified.

1.2.3.4 False Alarm: The annunciation of an alarm when there is no alarm stimuli.

1.2.4 Probability of Detection: Each zone shall have a continuous probability of detection greater than 90 percent and shall be demonstrated with a confidence level of 95 percent. This probability of detection equates to 49 successful detections out of 50 tests or 96 successful detections out of 100 tests. A false alarm rate of less than 1 false alarm per sensor per 5 days shall be provided at this probability of detection.

1.2.5 Electrical Requirements: Electrically powered IDS equipment shall operate on 120, 60 Hz AC sources as shown. Equipment shall be able to tolerate variations in the voltage source of plus or minus 10 percent, and variations in the line frequency of plus or minus 2 percent with no degradation of performance.

1.2.6 Power Line Surge Protection: Equipment connected to alternating current circuits shall be protected from power line surges. Equipment protection shall withstand surge test waveforms described in IEEE C62.41. Fuses shall not be used for surge protection.

1.2.7 Sensor Wiring and Communication Circuit Surge Protection: Inputs shall be protected against surges induced on sensor wiring. Outputs shall be protected against surges induced on control and sensor wiring installed outdoors and as shown. All communications equipment shall be protected against surges induced on any communications circuit. All cables and conductors, except fiber optics, which serve as communications circuits from the console to field equipment, and between field equipment, shall have surge protection circuits installed at each end. Protection shall be furnished at equipment, and additional triple electrode gas surge protectors rated for the application on each wireline circuit shall be installed within 900 mm3 feet of the building cable entrance. Fuses shall not be used for surge protection. The inputs and outputs shall be tested in both normal mode and common mode using the following two waveforms:

a. A 10 microsecond rise time by 1000 microsecond pulse width waveform with a peak voltage of 1500 volts and a peak current of 60 amperes.

b. An 8 microsecond rise time by 20 microsecond pulse width waveform with a peak voltage of 1000 volts and a peak current of 500 amperes.

1.2.8 Environmental Conditions

1.2.8.1 Interior, Uncontrolled Environment: All system components installed in interior locations having uncontrolled environments shall be rated for continuous operation under ambient environmental

conditions of minus 17.8 to plus 48.9 degrees C (0 to 120 degrees F)0 to 120 degrees F dry bulb and 10 to 95 percent relative humidity, noncondensing.

1.2.9 System Capacity: The system shall monitor and control the number of inputs and outputs shown and shall include an expansion capability of a minimum of 25 percent.

1.3 DELIVERY OF TECHNICAL DATA AND COMPUTER SOFTWARE

1.3.1 Operator's Manual: The operator's manual shall fully explain all procedures and instructions for the operation of the system

1.3.2 Maintenance Manual: The maintenance manual shall describe maintenance for all equipment including inspection, periodic preventive maintenance, fault diagnosis, and repair or replacement of defective components.

1.3.3 Final System: The Contractor shall maintain a separate set of drawings, elementary diagrams and wiring diagrams of the IDS to be used for final systemdrawings. This set shall be accurately kept up to date by the Contractor with all changes and additions to the IDS and shall be delivered to the Government with the final endurance test report. In addition to being complete and accurate, this set of drawings shall be kept neat and shall not be used for installation purposes. Upon completion of the final system drawings, a representative of the Government will review the final system work with the Contractor. If the final system work is not complete, the Contractor will be so advised and shall complete the work as required. Final drawings submitted with the endurance test report shall be finished drawings on mylar or vellum.

1.4 TESTING

1.4.1 General: The Contractor shall perform predelivery testing, site testing, and adjustment of the completed intrusion detection system. The Contractor shall provide all personnel, equipment, instrumentation, and supplies necessary to perform all testing. Written notification of planned testing shall be given to the Government at least 14 days prior to the test, and in no case shall notice be given until after the Contractor has received written approval of the specific test procedures.

1.4.2 Test Procedures and Reports: Test procedures shall explain in detail, step-by-step actions and expected results demonstrating compliance with the requirements of the specification. Test reports shall be used to document results of the tests. Reports shall be delivered to the Government within 7 days after completion of each test.

1.5 MAINTENANCE AND SERVICE

1.5.1 General Requirements: The Contractor shall provide all services required and equipment necessary to maintain the entire intrusion detection system in an operational state as specified for a period of 1 year after formal written acceptance of the system, and shall provide all necessary material required for performing scheduled adjustments or other nonscheduled work.

PART 2 PRODUCTS

2.1 GENERAL REQUIREMENTS

2.1.1 Materials and Equipment: Units of the same type of equipment shall be products of a single manufacturer. All material and equipment shall be new and currently in production. Each major component of equipment shall have the manufacturer's model and serial number in a conspicuous place. Equipment located at the Security Center or at a remote control/monitoring station shall be rack mounted as shown.

2.1.2 Enclosures: System enclosures shall be metallic as shown.

2.1.2.1 Interior Sensor: Sensors to be used in an interior environment shall be housed in an enclosure that provides protection against dust, falling dirt, and dripping noncorrosive liquids.

2.1.2.2 Exterior Sensor: Sensors to be used in an exterior environment shall be housed in an enclosure that provides protection against windblown dust, and rain, splashing water, and hose directed water; and shall be undamaged by the formation of ice on the enclosure.

2.1.2.3 Interior Electronics: System electronics to be used in an interior environment shall be housed in enclosures which meet the requirements of NEMA 250 Type 12.

2.1.3 Nameplates: Laminated plastic nameplates shall be provided for local processors. Each nameplate shall identify the local processor and its location within the system. Laminated plastic shall be 1/8 inch thick, white with black center core. Nameplates shall be a minimum of 1 inch by 3 inches, with minimum 1/4 inch high engraved block lettering. Nameplates shall be attached to the inside of the enclosure housing the local processor. Other major components of the system shall have the manufacturer's name, address, type or style, model or serial number, and catalog number on a corrosion resistant plate secured to the item of equipment. Nameplates will not be required for devices smaller than 1 inch by 3 inches.

2.1.4 Tamper Provisions:

2.1.4.1 Tamper Switches: Enclosures, cabinets, housings, boxes, and fittings of every description having hinged doors or removable covers and which contain circuits or connections of the intrusion detection system and its power supplies, shall be provided with cover operated, corrosion-resistant tamper switches, arranged to initiate an alarm signal when the door or cover is moved. Tamper switches shall be mechanically mounted to maximize the defeat time when enclosure covers are opened or removed. It shall take longer than 1 second to depress or defeat the tamper switch after opening or removing the cover. The enclosure and the tamper switch shall function together in such a manner as to not allow direct line of sight to any internal components before the switch activates. Tamper switches shall be inaccessible until the switch is activated; have mounting hardware so concealed that the location of the switch cannot be observed from the exterior of the enclosure; be connected to circuits which are under electrical supervision at all times, irrespective of the protection mode in which the circuit is operating; shall be spring-loaded and held in the closed position by the door or cover; and shall be wired so that they break the circuit when the door or cover is disturbed.

a. Nonsensor Enclosures: Tamper switches on nonsensor enclosures, which must be opened to make routine maintenance adjustments to the system and to service the power supplies, shall be push/pull-set, automatic reset type.

b. Sensor Enclosures: Tamper switches on sensor enclosures, which must be opened to make routine maintenance adjustments to the sensor, shall be single pole single throw type.

2.1.4.2 Enclosure Covers: Covers of pull and junction boxes provided to facilitate initial installation of the system need not be provided with tamper switches if they contain no splices or connections, but shall be protected by tack welding or brazing the covers in place. Zinc labels shall be affixed to such boxes indicating they contain no connections. These labels shall not indicate that the box is part of the intrusion detection system.

2.1.4.3 Conduit-Enclosure Connections: All conduit-enclosure connections shall be protected by tack welding or brazing the conduit to the enclosure. Tack welding or brazing shall be done in addition to standard conduit-enclosure connection methods as described in NFPA 70.

2.1.5 Locks and Key-Lock Switches:

2.1.5.1 Locks: Locks required to be installed on system enclosures for maintenance purposes shall be UL listed, round-key type, with three dual, one mushroom, and three plain pin tumblers or conventional key type lock having a combination of five cylinder pin and five-point three position side bar. Keys shall be stamped "U.S. GOVT. DO NOT DUP." The locks shall be so arranged that the key can only be withdrawn when in the locked position. All maintenance locks shall be keyed alike and only two keys shall be furnished for all of these locks.

2.1.5.2 Construction Locks: If the Contractor requires locks during installation and construction, a set of temporary locks shall be used. The final set of locks installed and delivered to the Government shall not include any of the temporary locks.

2.1.6 System Component Design: IDS components shall be designed for continuous operation. Electronic components shall be solid state type, mounted on printed circuit boards conforming to UL 796. Printed circuit board connectors shall be plug-in, quick-disconnect type. Power dissipating components shall incorporate safety margins of not less that 25 percent with respect to dissipation ratings, maximum voltages, and current carrying capacity. Light duty relays and similar switching devices shall be solid state type or sealed electromechanical.

2.1.6.1 Modularity: The Contractor shall provide equipment designed for increase of system capability by installation of component modules. System components shall be designed to facilitate maintenance through replacement of modular subassemblies and parts.

2.1.6.2 Maintainability: Components shall be designed to be maintained using commercially available tools and equipment. Components shall be arranged and assembled so they are accessible to maintenance personnel. There shall be no degradation in tamper protection, structural integrity, EMI/RFI attenuation, or line supervision after maintenance when it is performed in accordance with manufacturer's instructions. The system shall be configured and installed to yield a mean time to repair (MTTR) of not more than 8 hours. Repair time is the clock time from the time maintenance personnel are given entrance to the IDS and begin work, until the IDS is fully functional.

2.1.6.3 Interchangeability: The system shall be constructed with off-the-shelf components which are physically, electrically and functionally interchangeable with equivalent components as complete items. Replacement of equivalent components shall not require modification of either the new component or of other components with which the replacement items are used. Custom designed or one-of-a-kind items shall not be used. Interchangeable components or modules shall not require trial and error matching in order to meet integrated system requirements, system accuracy, or restore complete system functionality.

2.1.6.4 Electromagnetic and Radio Frequency Interference (EMI/RFI): IDS components generating EMI/RFI shall be designed and constructed in accordance with 47 CFR 15.

2.1.6.5 Product Safety: IDS components shall conform to applicable rules and requirements of NFPA 70. IDS components, shall be equipped with instruction plates including warnings and cautions, describing physical safety, and special or important procedures to be followed in operating and servicing IDS equipment.

2.1.7 Controls and Designations: Controls and designations shall be as specified in NEMA ICS 1.

2.1.8 Special Test Equipment: The Contractor shall provide all special test equipment, special hardware, software, tools, and programming or initialization equipment needed to start or maintain any part of the system and its components. Special test equipment is defined as any test equipment not normally used in an electronics maintenance facility.

2.1.9 Alarm Output: The alarm output of each sensor shall be a single pole double throw (SPDT) contact rated for a minimum of 0.25 A at 24 volts DC.

2.1.10 Indicator Lights: Indicator lights used throughout the system shall be light emitting diodes (LED) or long life incandescent lamps. The indicator lights used shall be visible from a distance of 9.1 meters30 feet in an area illuminated to 800 lx.75 foot candles. The indicator lights shall conform to the following color coding:

a. RED shall be used to alert an operator that a zone is in alarm and that the alarm has been acknowledged.

b. FLASHING RED shall be used to alert an operator that a zone has gone into an alarm or that primary power has failed.

c. YELLOW shall be used to advise an operator that a zone is in access.

d. GREEN shall be used to indicate that a zone is secure or that power is on.

2.1.11 Access/Secure Switches: An access/secure switch shall be used to place a protected zone in ACCESS. The switch shall consist of a double pull key-operated switch housed in a NEMA 12 equivalent enclosure. The switch shall disable all sensor alarm outputs with the exception of tamper alarm outputs within the protected zone and sensors in zones above false ceilings or other inaccessible locations as shown.

2.2 INTERIOR SENSORS

2.2.1 Balanced Magnetic Switch (BMS): The BMS shall detect a 1/4 inch of separating relative movement between the magnet and the switch housing. Upon detecting such movement, it shall transmit an alarm signal to the alarm annunciation system.

2.2.1.1 BMS Subassemblies: The BMS shall consist of a switch assembly and an actuating magnetic assembly. The switch mechanism shall be of the balanced magnetic type. Each switch shall be provided with an overcurrent protective device, rated to limit current to 80 percent of the switch capacity. Switches shall be rated for a minimum lifetime of one million operations. The magnet assembly shall house the actuating magnet.

2.2.1.2 Housing: The housings of surface mounted switches and magnets shall be made of nonferrous metal and shall be weatherproof. The housings of recess mounted switches and magnets shall be made of nonferrous metal or plastic.

2.2.1.3 Remote Test: A remote test capability shall be provided. The remote test shall be initiated when commanded by the alarm annunciation system. The remote test shall activate the sensor's switch mechanism causing an alarm signal to be transmitted to the alarm annunciation system. The remote test shall simulate the movement of the actuating magnet relative to the switch subassembly.

2.3 ELECTRONIC ENTRY SYSTEM CONTROL AND INTERCONNECTION TO BASE SUBSYSTEM: Provide keypad device to control system. Provide transducer compatible with Base security control system.

2.4 WIRE AND CABLE

2.4.1 General: The Contractor shall provide all wire and cable not indicated as Government furnished equipment. All wiring shall meet NFPA 70 standards.

2.4.2 Above Ground Sensor Wiring: Sensor wiring shall be 20 AWG minimum, twisted and shielded, 2, 3, 4, or 6 pairs to match hardware. Multiconductor wire shall have an outer jacket of PVC.

2.4.3 Class 2 Low Energy Conductors: The conductor sizes specified for digital functions shall take precedence over any requirements for Class 2 low energy signal-circuit conductors specified elsewhere.

2.5 PREDELIVERY TESTING

2.5.1 General: The Contractor shall assemble the test IDS as specified, and perform tests to demonstrate that the performance of the system complies with the contract requirements in accordance with the approved predelivery test procedures. The tests shall take place during regular daytime working hours on weekdays. Model numbers of equipment tested shall be identical to those to be delivered to the site. Original copies of all data produced during predelivery testing, including results of each test procedure, shall be delivered to the Government at the conclusion of predelivery testing prior to Government approval of the test. The test report shall be arranged so that all commands, stimuli, and responses are correlated to allow logical interpretation.

2.5.2 Test Setup: The predelivery test setup shall include the following:

a. All console equipment.

b. At least one of each type data transmission media (DTM) and associated equipment to provide a fully integrated IDS.

c. The number of local processors shall equal the amount required by the site design.

d. Enough sensor simulators to provide alarm signal inputs to the system equal to the number of sensors required by the design. The alarm signals shall be manually or software generated.

PART 3 EXECUTION

3.1 GENERAL: The Contractor shall install all system components and appurtenances in accordance with the manufacturer's instructions, ANSI C2 and as shown, and shall furnish all necessary interconnections, services, and adjustments required for a complete and operable system as specified and shown.

3.1.1 Installation: All wiring, including low voltage wiring outside the console, cabinets, boxes, and similar enclosures, shall be installed in rigid galvanized steel conduit conforming to UL 6. Minimum size of conduit shall be 1/2 inch. Connections shall be tight tapered threaded. No threadless fittings or couplings shall be used. Conduit outlet boxes, pull boxes, junction boxes, conduit fittings and similar enclosures shall be cast metal or malleable iron as specified in Section 16415, with threaded hubs or bodies. Electric metallic tubing (EMT), armored cable, nonmetallic sheathed cable, or flexible conduit will not be permitted except where specifically shown. DTM shall not be pulled into conduits or placed in raceways, compartments, outlet boxes, junction boxes, or similar fittings with other building wiring. Flexible cords or cord connections shall not be used to supply power to any components of the intrusion detection system, except where specifically noted herein. All other electrical work shall be as specified in Section 16415 and as shown. Grounding shall be installed as necessary to preclude ground loops, noise, and surges from adversely affecting system operation.

3.1.2 Enclosure Penetrations: All enclosure penetrations shall be from the bottom unless the system design requires penetrations from other directions. Penetrations of interior enclosures involving transitions of conduit from interior to exterior, and all penetrations on exterior enclosures shall be sealed with an approved sealant as recommended by the cable manufacturer to preclude the entry of water. The conduit riser shall terminate in a hot-dipped galvanized metal cable terminator. The terminator shall be

filled with an approved sealant as recommended by the cable manufacturer, and in such a manner that the cable is not damaged.

3.1.3 Cold Galvanizing: All field welds and/or brazing on factory galvanized components, such as boxes, enclosures, and conduits, shall be coated with a cold galvanized paint containing at least 95 per cent zinc by weight.

3.2 SYSTEM STARTUP: The Contractor shall not apply power to the intrusion detection system until the following items have been completed:

a. Intrusion detection system equipment items and DTM have been set up in accordance with manufacturer's instructions.

b. A visual inspection of the intrusion detection system has been conducted to ensure that defective equipment items have not been installed and that there are no loose connections.

c. System wiring has been tested and verified as correctly connected as indicated.

d. All system grounding and transient protection systems have been verified as properly installed and connected as indicated.

e. Power supplies to be connected to the intrusion detection system have been verified as the correct voltage, phasing, and frequency as indicated.

f. Satisfaction of the above requirements shall not relieve the Contractor of responsibility for incorrect installation, defective equipment items, or collateral damage as a result of Contractor work/equipment.

3.3 SITE TESTING

3.3.1 General: The Contractor shall provide all personnel, equipment, instrumentation, and supplies necessary to perform all site testing. The Government will witness all performance verification and endurance testing. Written permission shall be obtained from the Government before proceeding with the next phase of testing. Original copies of all data produced during performance verification and endurance testing shall be turned over to the Government at the conclusion of each phase of testing prior to Government approval of the test.

3.3.2 Contractor's Field Testing: The Contractor shall calibrate and test all equipment, verify data transmission media (DTM) operation, place the integrated system in service, and test the integrated system. Ground rods installed by the Contractor shall be tested as specified in IEEE Std 142. The Contractor shall deliver a report describing results of functional tests, diagnostics, and calibrations including written certification to the Government that the installed complete system has been calibrated, tested, and is ready to begin performance verification testing. The report shall also include a copy of the approved performance verification test procedure.

3.3.3 Performance Verification Test: The Contractor shall demonstrate that the completed IDS complies with the contract requirements. Using approved test procedures, all physical and functional requirements of the project shall be demonstrated and shown. The performance verification test, as specified, shall not be started until receipt by the Contractor of written permission from the Government, based on the Contractor's written request. This shall include certification of successful completion of testing as specified in paragraph Contractor's Field Testing, and upon successful completion of training as specified. The Government may terminate testing at any time when the system fails to perform as specified. Upon termination of testing by the Government or by the Contractor, the Contractor shall commence an assessment period as described for Endurance Testing Phase II. Upon successful completion of the

performance verification test, the Contractor shall deliver test reports and other documentation, as specified, to the Government.

3.3.4 Exclusions: The Contractor will not be held responsible for failures in system performance resulting from the following:

a. An outage of the main power in excess of the capability of any backup power source, provided that the automatic initiation of all backup sources was accomplished and that automatic shutdown and restart of the IDS performed as specified.

b. Failure of a Government furnished communications link, provided that the failure was not due to Contractor furnished equipment, installation, or software.

c. Failure of existing Government owned equipment, provided that the failure was not due to Contractor furnished equipment, installation, or software.

d. The occurrence of specified nuisance alarms.

e. The occurrence of specified environmental alarms.

--- End of Section ---