INVITATION FOR BIDS

CLINIC ADDITION

Hill Air Force Base, Utah

IFB NO. DACA05-98-B-0010
SPECIFICATION NO. 9491
DRAWING FILE NO. 180-25-761

US ARMY CORPS OF ENGINEERS
Sacramento District

PROJECT NO. 040267

TABLE OF CONTENTS

001	COVER SHEET
002	TABLE OF CONTENTS
003	DD FORM 1707

SECTION	TITLE
00010	SOLICITATION, OFFER AND AWARD (STANDARD FORM 1442) AND PRICING SCHEDULE
00100	INSTRUCTIONS, CONDITIONS AND NOTICES TO BIDDERS/ OFFERORS AND EVALUATION CRITERIA FOR AWARD
00600	REPRESENTATIONS, CERTIFICATIONS AND OTHER STATEMENTS OF BIDDERS/OFFERORS
00700	CONTRACT CLAUSES
00800	SPECIAL CONTRACT REQUIREMENTS

ATTACHMENTS:

ATCH NO.	
0901	GENERAL WAGE DECISION (ATTACHMENT 1)
0902	DD FORM 2051 (ATTACHMENT 2)
0903	PREAWARD SURVEY (ATTACHMENT 3)
0904	SUBCONTRACTING PLAN (ATTACHMENT 4)

	TECHNICAL SPECIFICATIONS
010	(SEE TECHNICAL SPECIFICATIONS' TABLE OF CONTENTS FOR SPECIFICATION SECTIONS INCLUDED IN THIS SOLICITATION/CONTRACT)
	DRAWINGS (LIST OF DRAWINGS-SECTION 00800)

NOTE: AS A MINIMUM ANY CONTRACT AWARDED AS A RESULT OF THIS SOLICITATION SHALL CONSIST OF THE FOLLOWING DOCUMENTS:

STANDARD FORM 1442, SECTIONS 00010, 00700, 00800, TECHNICAL SPECIFICATIONS AND DRAWINGS, AND ATTACHMENTS AS DESCRIBED IN CONTRACT DOCUMENT.

SECTION 00600, AS COMPLETED BY AWARDEE, IS INCORPORATED INTO ANY RESULTANT CONTRACT BY REFERENCE.

SECTION 00100 IS INCLUDED FOR SOLICITATION PURPOSES ONLY. THIS SECTION WILL BE REMOVED, MAINTAINED IN THE CONTRACT FILE AND NOT MADE PART OF THE CONTRACT.

AMENDMENTS ARE INCORPORATED INTO THE RESULTANT CONTRACT.

SUBCONTRACTING PLAN (IF REQUIRED) BECOMES AN ATTACHMENT TO AND A MATERIAL PART OF THE CONTRACT.

INFORMATION TO OFFERORS OR BIDDERS

COVER SHEET

1. SOLICITATION NUMBER

DACA05-98-B-0010
Spec. No. 9491

2. *(X one)*

x	a. SEALED BID
	b. NEGOTIATED *(RFP)*
	c. NEGOTIATED *(RFQ)*

INSTRUCTIONS

NOTE THE AFFIRMATIVE ACTION REQUIREMENT OF THE EQUAL OPPORTUNITY CLAUSE WHICH MAY APPLY TO THE CONTRACT RESULTING FROM THIS SOLICITATION.

You are cautioned to note the "Certification of Non-Segregated Facilities" in the solicitation. Failure to agree to the certification will render your reply nonresponsive to the terms of solicitations involving awards of contracts exceeding $25,000 which are not exempt from the provisions of the Equal Opportunity clause.

"Fill-ins" are provided on the face and reverse of Standard Form 1442 or other solicitation documents and Sections of Table of Contents in this solicitation and should be examined for applicability.

See the provision of this solicitation entitled either "Late Bids, Modifications of Bids or Withdrawal of Bids" or "Late Proposals, Modifications of Proposals and Withdrawals of Proposals."

When submitting your reply, the envelope used must be plainly marked with the Solicitation Number, as shown above, and the date and local time set forth for bid opening or receipt of proposals in the solicitation document.

If NO RESPONSE is to be submitted, detach this sheet from the solicitation, complete the information requested on reverse, fold, affix postage, and mail. NO ENVELOPE IS NECESSARY.

Replies must set forth full, accurate, and complete information as required by this solicitation *(including attachments)*. The penalty for making false statements is prescribed in 18 U.S.C. 1001.

3. ISSUING OFFICE *(Complete mailing address, including Zip Code)*

DEPARTMENT OF THE ARMY
U.S. ARMY ENGINEER DISTRICT, SACRAMENTO
CORPS OF ENGINEERS
ATTN: CONTRACTING DIVISION, PLAN ROOM
1325 J STREET
SACRAMENTO, CALIFORNIA 95814-2922

4. ITEMS TO BE PURCHASED *(Brief description)*

SEE SF-1442, BLOCK 10.

TYPE OF CONTRACT: SEE SECTION 00100, FAR CLAUSE 52.216-1

5. PROCUREMENT INFORMATION *(X and complete as applicable)*

x	a. THIS PROCUREMENT IS UNRESTRICTED				
	b. THIS PROCUREMENT IS A 100 % SET-ASIDE FOR ONE OF THE FOLLOWING *(X one)*. (See Section 00700)				(3) Combined Small Business/Labor Area Concerns
		(1) Small Business [8(a)]		(2) Labor Surplus Area Concerns	(4) Small Disadvantaged Business Concerns

6. ADDITIONAL INFORMATION

COMPLETE DETAILS FOR PROPER SUBMISSION OF BIDS ARE FOUND IN SECTIONS 00100, 00600 AND ATTACHMENTS. REMINDER: ACKNOWLEDGE ALL AMENDMENTS (FILL IN BACK PAGE OF SF-1442 OR RETURN SIGNED COPY OF SF-30). IF ANY OF THE AMENDMENTS FURNISHED AMENDED PAGES WHICH ARE PART OF THE BID, THE AMENDED PAGES MUST BE USED IN THE BID.

BID WILL INCLUDE:

A. COMPLETED AND SIGNED SF-1442 (SECTION 00010)
B. COMPLETED PRICING SCHEDULE (SECTION 00010)
C. COMPLETED REPRESENTATIONS/CERTIFICATIONS (SECTION 00600)
D. DD FORM 2051, CAGE CODE (SEE SECTION 00100, DFARS 252.204-7001, AND ATTACHMENTS). COMPLETE AND SUBMIT IF YOU DO NOT HAVE A CAGE CODE)
E. ACKNOWLEDGEMENT OF AMENDMENTS, IF ANY AMENDMENTS WERE ISSUED
F. ANY OTHER DOCUMENTS REQUIRED BY THE SOLICITATION (SEE ATTACHMENTS SECTION)

7. POINT OF CONTACT FOR INFORMATION

a. NAME (Last, First, Middle Initial) SEE SECTION 00100	b. ADDRESS *(Include Zip Code)*
c. TELEPHONE NUMBER *(Include Area Code and Extension) (NO COLLECT CALLS)* SEE SECTION 00100	SAME AS BLOCK 3 ABOVE

8. REASONS FOR NO RESPONSE *(X all that apply)*			
	a. CANNOT COMPLY WITH SPECIFICATIONS		b. CANNOT MEET DELIVERY REQUIREMENT
	c. UNABLE TO IDENTIFY THE ITEM(S)		d. DO NOT REGULARLY MANUFACTURE OR SELL THE TYPE OF ITEMS INVOLVED
	e. OTHER *(Specify)*		

9. MAILING LIST INFORMATION *(X one)*				
	YES		NO	WE DESIRE TO BE RETAINED ON THE MAILING LIST FOR FUTURE PROCUREMENT OF THE TYPE OF ITEM(S) INVOLVED.

10. RESPONDING FIRM	
a. COMPANY NAME	b. ADDRESS *(Include Zip Code)*

c. ACTION OFFICER			
(1) Typed or Printed Name *(Last, First, Middle Initial)*	(2) Title	(3) Signature	(4) Date Signed *(YYMMDD)*

DD Form 1707 Reverse, MAR 89

FOLD *FOLD*

FOLD *FOLD*

FROM

AFFIX
STAMP
HERE

SOLICITATION NUMBER	
DATE *(YYMMDD)*	LOCAL TIME

TO

DEPARTMENT OF THE ARMY
U.S. ARMY ENGINEER DISTRICT, SACRAMENTO
CORPS OF ENGINEERS
ATTN: CONTRACTING DIVISION, PLAN ROOM
1325 J STREET
SACRAMENTO, CA 95814-2922

SECTION 00010

SOLICITATION, OFFER AND AWARD (STANDARD FORM 1442) AND PRICING SCHEDULE

SOLICITATION, OFFER, AND AWARD (Construction, Alteration, or Repair)	1. SOLICITATION NO.	2. TYPE OF SOLICITATION	3. DATE ISSUED	PAGE OF PAGES
	DACA05-98-B-0010	[X] SEALED BID (IFB) [ ] NEGOTIATED (RFP)	97 DEC 30	

IMPORTANT - The "offer" section on the reverse must be fully completed by offeror.

4. CONTRACT NO.	5. REQUISITION/PURCHASE REQUEST NO.	6. PROJECT NO.
		0402267

7. ISSUED BY CODE	8. ADDRESS OFFER TO
DEPARTMENT OF THE ARMY U.S. ARMY ENGINEER DISTRICT, SACRAMENTO CORPS OF ENGINEERS 1325 J STREET SACRAMENTO, CALIFORNIA 95814-2922	DEPARTMENT OF THE ARMY U.S. ARMY ENGINEER DISTRICT, SACRAMENTO UTAH AREA OFFICE 7227 6TH STREET, BUILDING 366 HILL AIR FORCE BASE, UTAH 84056-5214

9. FOR INFORMATION CALL:	A. NAME	B. TELEPHONE NO. (Include area code) (NO COLLECT CALLS)
	See SECTION 00100	See SECTION 00100

SOLICITATION

NOTE: In sealed bid solicitations, "offer" and "offeror" mean "bid" and "bidder".

10. THE GOVERNMENT REQUIRES PERFORMANCE OF THE WORK DESCRIBED IN THESE DOCUMENTS (Title, identifying no., date):

CLINIC ADDITION
HILL AIR FORCE BASE, UTAH

Specification No. 9491

Description: This project will construct an outpatient clinic building adjacent to the main hospital to house the Flight/Aerospace Medicine, Pediatrics, and Optometry Clinics. Construction of the outpatient clinic building will include reinforced concrete substructure, masonry walls, store-front facing, electrical systems, HVAC, EMCS, fire detection/alarm/protection and other mechanical systems, plumbing systems, exterior site improvements, all utility service lines, and all associated features. Construction for the alteration includes removal and construction of walls and partitions, replacement of floor coverings, required electrical, mechanical, plumbing, fire detection and protection, communication system modifications, and all associated features. The addition is approximately 12,300+SF. The facilities will be handicap accessible.

RESPONDERS ARE ADVISED THAT THIS PROJECT MAY BE DELAYED, CANCELED OR REVISED AT ANY TIME DURING THE SOLICITATION, SELECTION, EVALUATION, NEGOTIATION AND/OR FINAL AWARD PROCESS.

Estimated Cost Range of Project: $1,000,000 - 5,000,000

Any Contract awarded under this solicitation will be made pursuant to Public Law 100-656, Small Business Competitiveness Demonstration Program. See DD Form 1707, Block 5 for unrestricted/set-aside information.

11. The Contractor shall begin performance within 10 calendar days and complete it within 420 calendar days after receiving [ ] award, [X] notice to proceed. This performance period is [X] mandatory, [ ] negotiable (See SECTION 00800, FAR 52.211-10 .)

12A. THE CONTRACTOR MUST FURNISH ANY REQUIRED PERFORMANCE AND PAYMENT BONDS? (If "YES," indicate within how many calendar days after award in Item 12B.)	12B. CALENDAR DAYS
[X] YES [ ] NO	Ten (10)

13. ADDITIONAL SOLICITATION REQUIREMENTS:

A. Sealed offers in original and O copies to perform the work required are due at the place specified in Item 8 by 2:00 PM (hour) local time, 98 JAN 29 (date). If this is a sealed bid solicitation, offers will be publicly opened at that time. Sealed envelopes containing offers shall be marked to show the offeror's name and address, the solicitation number, and the date and time offers are due.

B. An offer guarantee [X] is, [ ] is not required.

C. All offers are subject to the (1) work requirements, and (2) other provisions and clauses incorporated in the solicitation in full text or by reference.

D. Offers providing less than 90 calendar days for Government acceptance after the date offers are due will not be considered and will be rejected.

OFFER *(Must be fully completed by offeror)*

14. NAME AND ADDRESS OF OFFEROR *(Include ZIP Code)*

15. TELEPHONE NO. *(Include area code)*
( ) FAX ( )

16. REMITTANCE ADDRESS *(Include only if different than Item 14)*

DUNS:_____ CAGE CODE:_____

CODE FACILITY CODE

17. The offeror agrees to perform the work required at the prices specified below in strict accordance with the terms of this solicitation, if this offer is accepted by the Government in writing within _____ calendar days after the date offers are due. *(Insert any number equal to or greater than the minimum requirement stated in Item 13D. Failure to insert any number means the offeror accepts the minimum in Item 13D.)*

AMOUNTS ▶ See Pricing Schedule

18. The offeror agrees to furnish any required performance and payment bonds.

19. ACKNOWLEDGEMENT OF AMENDMENTS
(The offeror acknowledges receipt of amendments to the solicitation - give number and date of each)

AMENDMENT NO.										
DATE										

20A. NAME AND TITLE OF PERSON AUTHORIZED TO SIGN OFFER *(Type or print)*

20B. SIGNATURE

20C. OFFER DATE

AWARD *(To be completed by Government)*

See pg. 3 for 20D

21. ITEMS ACCEPTED:

22. AMOUNT

23. ACCOUNTING AND APPROPRIATION DATA

24. SUBMIT INVOICES TO ADDRESS SHOWN IN ▶ ITEM
(4 copies unless otherwise specified)

25. OTHER THAN FULL AND OPEN COMPETITION PURSUANT TO
☐ 10 U.S.C. 2304(c) ( ) ☐ 41 U.S.C. 253(c) ( )

26. ADMINISTERED BY CODE

27. PAYMENT WILL BE MADE BY

CONTRACTING OFFICER WILL COMPLETE ITEM 28 OR 29 AS APPLICABLE

☐ 28. NEGOTIATED AGREEMENT *(Contractor is required to sign this document and return _____ copies to issuing office.)* Contractor agrees to furnish and deliver all items or perform all work requirements identified on this form and any continuation sheets for the consideration stated in this contract. The rights and obligations of the parties to this contract shall be governed by (a) this contract award, (b) the solicitation, and (c) the clauses, representations, certifications, and specifications incorporated by reference in or attached to this contract.

☐ 29. AWARD *(Contractor is not required to sign this document.)* Your offer on this solicitation is hereby accepted as to the items listed. This award consummates the contract, which consists of (a) the Government solicitation and your offer, and (b) this contract award. No further contractual document is necessary.

30A. NAME AND TITLE OF CONTRACTOR OR PERSON AUTHORIZED TO SIGN *(Type or Print)*

31A. NAME OF CONTRACTING OFFICER *(Type or Print)*

30B. SIGNATURE

30C. DATE

31B. UNITED STATES OF AMERICA
BY

31C. AWARD DATE

BLOCK 20D:

(1) IF THE OFFEROR IS A JOINT VENTURE, EACH PARTICIPANT IN THE JOINT VENTURE MUST COMPLETE THE FOLLOWING:

Company Name	Signature	Title
Company Name	Signature	Title
Company Name	Signature	Title

NOTE: If a corporation is participating as a member of a Joint Venture, the certificate below must also be completed and signed.

CORPORATION AUTHORIZATION TO PARTICIPATE IN JOINT VENTURE CERTIFICATE

I, _____, certify that I am the Secretary of the corporation
(name)
named as a participant in a Joint Venture on this offer; that
_____, who signed said offer on behalf of the corporation, was
(name)
then _____ of said corporation; that the signature thereto is
(title)
genuine; that said contract was duly signed, sealed and attested for and in behalf of said corporation by authority of its governing body; and that the corporation is authorized to participate in the Joint Venture on this offer.

_____
(Name of Corporation)

_____
(Secretary)

(2) IF THE OFFEROR IS A PARTNERSHIP, LIST FULL NAME OF ALL PARTNERS BELOW. SIGNATURES BY ALL PARTNERS HERE SIGNIFY THAT THE INDIVIDUAL WHO SIGNED THE OFFER IN BLOCK 20B HAS THE AUTHORITY TO BIND THE PARTNERSHIP.

Name	Signature
Name	Signature
Name	Signature

(3) IF THE OFFEROR IS A CORPORATION, THE OFFER SHALL BE SIGNED IN THE CORPORATE NAME FOLLOWED BY THE WORD "BY" AND THE SIGNATURE OF THE PERSON AUTHORIZED TO SIGN THE OFFER IN BLOCK 20B. PROVIDE PROOF THAT THE PERSON SIGNING FOR THE CORPORATION HAS THE AUTHORITY TO BIND THE CORPORATION BY COMPLETING THE FOLLOWING CERTIFICATE:

CORPORATION AUTHORIZATION CERTIFICATE

I, _____, certify that I am the Secretary of the
(name)
corporation named as offeror in the within offer; that _____,
(name)
who signed said offer on behalf of the corporation, was then

_____ of said corporation, that the signature
(title)
thereto is genuine; that said contract was duly signed, sealed and attested for in behalf of said corporation by authority of its governing body.

_____
(Name of Corporation)

_____
(Secretary)

(4) IF THE OFFEROR IS AN INDIVIDUAL DOING BUSINESS AS A FIRM, THE OFFER SHALL BE SIGNED BY THAT INDIVIDUAL IN BLOCK 20B FOLLOWED BY THE WORDS "AN INDIVIDUAL DOING BUSINESS AS _____ (INSERT NAME OF FIRM).

(5) WHEN AN AGENT SIGNS THE OFFER, PROVIDE PROOF OF THE AGENT’S AUTHORITY TO BIND THE PRINCIPAL.

PRICING SCHEDULE

CONTRACTOR SHALL FURNISH ALL PLANT, LABOR, MATERIAL, EQUIPMENT, ETC. NECESSARY TO PERFORM ALL WORK IN STRICT ACCORDANCE WITH THE TERMS AND CONDITIONS SET FORTH IN THE CONTRACT TO INCLUDE ALL ATTACHMENTS THERETO.

ITEM NO.	DESCRIPTION	AMOUNT
0001	ALL FACILITIES/FEATURES WITHIN THE 5-FOOT BUILDING LINE (EXCEPT AS NOTED BELOW), COMPLETE	$_____
0002	ALL FACILITIES/FEATURES OUTSIDE THE 5-FOOT BUILDING LINE (EXCEPT AS NOTED BELOW), COMPLETE	$_____
	SUBTOTAL PRICE	$_____

OPTIONS

0003	INTERIOR SIGNAGE PROCURRED AND INSTALLED, COMPLETE (OPTION 1)	$_____
0004	LANDSCAPE (LESS TURF AND IRRIGATION) PROCURRED, INSTALLED, AND MAINTAINTED HEALTHY, COMPLETE (OPTION 2)	$_____
0005	AUDIO BOOTH PROCURRED, INSTALLED, AND TESTED, COMPLETE (OPTION 3)	$_____
	SUBTOTAL OPTIONS PRICE	$_____
	TOTAL PRICE	$_____

1. Prices must be submitted on all individual items of this Pricing Schedule. Failure to do so may be cause for rejection of bids.

2. If a modification to a price is submitted which provides for a lump sum adjustment to the total price, the application of the lump sum adjustment to each item in the Pricing Schedule must be stated. If it is not stated, the bidder/offeror agrees that the lump sum adjustment shall be applied on a pro rata basis to every item in the Pricing Schedule.

3. The bidder/offeror shall distribute his indirect costs (overhead, profit, bond, etc.) over all the items in the Pricing Schedule. The Government will review all submitted Pricing Schedules for any unbalancing of the items. Any submitted Pricing Schedule determined to be unbalanced may be considered nonresponsive and cause the bidder to be ineligible for award.

4. The successful bidder/offeror grants the options listed in the Pricing Schedule to the Government. This option may be exercised any time up to (60) days after receipt of Notice to Proceed. Exercise of the option occurs upon mailing of written notice to the Contractor’s field office or job superintendent. Exercise will be made by the Contracting Officer. The price for exercise of the option includes all work and effort associated with the scope of that item. For determination of lowest bid, see paragraph titled EVALUATION OF OPTIONS in Section 00100 of this solicitation. No additional time for contract completion will be allowed when an option is exercised. The

given contract completion time was formulated to include time necessary to perform all option work.

5. EFARS 52.214-5000 APPARENT CLERICAL MISTAKES - ARITHMETIC DISCREPANCIES (DEC 1995)--EFARS

(a) For the purpose of initial evaluation of bids/offers, the following will be utilized in resolving arithmetic discrepancies found on the face of the Pricing Schedule as submitted by bidders/offerors:

(1) Obviously misplaced decimal points will be corrected;

(2) Discrepancy between unit price and extended price, the unit price will govern;

(3) Apparent errors in extension of unit prices will be corrected;

(4) Apparent errors in addition of lump-sum and extended prices will be corrected.

(b) For the purpose of bid/offer evaluation, the Government will proceed on the assumption that the bidder/offeror intends the bid/offer to be evaluated on basis of the unit prices, the total arrived at by resolution of arithmetic discrepancies as provided above and the bid/offer will be so reflected on the abstract of bids/offers.

(c) These correction procedures shall not be used to resolve any ambiguity concerning which bid is low.

SECTION 00100

INSTRUCTIONS, CONDITIONS AND NOTICES TO BIDDERS/OFFERORS AND EVALUATION CRITERIA FOR AWARD

SECTION 00100

INSTRUCTIONS, CONDITIONS AND NOTICES TO BIDDERS/OFFERORS AND EVALUATION CRITERIA FOR AWARD

1. FAR 52.252-1 SOLICITATION PROVISIONS INCORPORATED BY REFERENCE (JUN 1988)

This solicitation incorporates one or more solicitation provisions by reference, with the same force and effect as if they were given in full text. Upon request, the Contracting Officer will make their full text available.

SOLICITATION PROVISIONS BY REFERENCE:

INSTRUCTIONS, CONDITIONS AND NOTICES TO BIDDERS/OFFERORS:

2. DFARS 252-204-7001 COMMERCIAL AND GOVERNMENT ENTITY (CAGE) CODE REPORTING (DEC 1991)

3. DFARS 252.211-7003 BRAND NAME OR EQUAL (DEC 1991) (APPLICABLE IF SPECS CALL OUT A BRAND NAME)

4. FAR 52.214-1 SOLICITATION DEFINITIONS--SEALED BIDDING (JUL 1987)

5. FAR 52.214-3 AMENDMENTS TO INVITATIONS FOR BIDS (DEC 1989)

6. FAR 52.214-4 FALSE STATEMENTS IN BIDS (APR 1984)

7. FAR 52.214-5 SUBMISSION OF BIDS (MAR 1997)

8. FAR 52.214-6 EXPLANATION TO PROSPECTIVE BIDDERS (APR 1984)

9. FAR 52.214-7 LATE SUBMISSIONS, MODIFICATIONS, AND WITHDRAWALS OF BIDS (MAY 1997)

10. FAR 52.214-18 PREPARATION OF BIDS--CONSTRUCTION (APR 1984)

11. FAR 52.214-19 CONTRACT AWARD--SEALED BIDDING--CONSTRUCTION (AUG 1996)

12. FAR 52.214-34 SUBMISSION OF OFFERS IN THE ENGLISH LANGUAGE (APR 1991) (APPLICABLE IF DFARS 252.225-7007 OR 252.225-7036 OR FAR 52.225-15 ARE APPLICABLE - SEE SECTION 00700)

13. FAR 52.214-35 SUBMISSION OF OFFERS IN U.S. CURRENCY (APR 1991) (APPLICABLE IF DFARS 252.225-7007 OR 252.225-7036 OR FAR 52.225-15 ARE APPLICABLE - SEE SECTION 00700)

THE FOLLOWING SOLICITATION PROVISIONS ARE INCLUDED IN FULL TEXT

INSTRUCTIONS, CONDITIONS AND NOTICES TO BIDDERS/OFFERORS:

14.	SAACONS 52.0214-4581	INQUIRIES (APR 1992)
15.	SAACONS 52.0214-4582	DIRECTIONS FOR SUBMITTING BIDS/PROPOSALS (APR 1992)
16.	FAR 52.236-27	SITE VISIT (CONSTRUCTION) (FEB 1995), ALTERNATE I (FEB 1995)
17.	SAACONS 52.0209-4501	CONTRACTOR RESPONSIBILITY, PREAWARD SURVEY (JUL 1995)
18.	FAR 52.211-14	NOTICE OF PRIORITY RATING FOR NATIONAL DEFENSE USE (SEP 1990)
19.	DFARS 252.211-7002	AVAILABILITY FOR EXAMINATION OF SPECIFICATIONS, STANDARDS, PLANS, DRAWINGS, DATA ITEM DESCRIPTIONS, AND OTHER PERTINENT DOCUMENTS (DEC 1991)
20.	SAACONS 52.0211-4805	AVAILABILITY OF SPECIFICATIONS, STANDARDS AND DESCRIPTIONS (OCT 1992)
21.	SAACONS 52.0214-4583	TELEGRAPHIC BIDS/OFFERS (APR 1992)
22.	SAACONS 52.0214-4584	FACSIMILE BIDS/OFFERS (APR 1992)
23.	FAR 52.216-1	TYPE OF CONTRACT (APR 1984)
24.	SAACONS 52.0219-4581	PREPARATION OF SUBCONTRACTING PLAN (APR 1994)
25.	FAR 52.222-23	NOTICE OF REQUIREMENT FOR AFFIRMATIVE ACTION TO ENSURE EQUAL EMPLOYMENT OPPORTUNITY (APR 1984)
26.	SAACONS 52.0228-4504	PERFORMANCE AND PAYMENT BONDS (AUG 1991)
27.	SAACONS 52.0228-4506	INDIVIDUAL SURETIES IN SUPPORT OF BID BONDS (AUG 1991)
28.	SAACONS 52.228-450	BID GUARANTEE FORM AND AMOUNT (JAN 1993)
29.	DFARS 252.228-7004	BONDS OR OTHER SECURITY (DEC 1991)
30.	FAR 52.233-2	SERVICE OF PROTEST (AUG 1996)
31.	SAACONS 52.0236-4507	ACCEPTANCE OF OFFERS (AUG 1991)
32.	FAR 52.252-3	ALTERATIONS IN SOLICITATION (APR 1984)
33.	FAR 52.252-5	AUTHORIZED DEVIATIONS IN PROVISIONS (APR 1984)

EVALUATION CRITERIA FOR AWARD:

34.	SAACONS 52.0214-4503	EVALUATION FOR AWARD (JAN 1991)
35.	FAR 52.217-5	EVALUATION OF OPTIONS (JUL 1990)

FULL TEXT SOLICITATION PROVISIONS:

INSTRUCTIONS, CONDITIONS AND NOTICES TO BIDDERS/OFFERORS:

14. SAACONS 52.0214-4581 INQUIRIES (APR 1992)

Perspective bidders/offerors should submit inquiries related to this solicitation by writing or calling the following (collect calls will not be accepted):

(1) For information related to amendments and information on bid opening dates or dates set for receipt of proposals:

Plan Room Fax (916) 557-7842

(2) For inquiries of a contractual nature (solicitation requirements, interpretation of contractual language) call:

Mr. Ron Donez, Contract Specialist (916) 557-5193
or fax questions to (916) 557-7854.

For bid results only call (916) 557-5237. This phone line is dedicated to Government-recorded bid results; it is an unattended number and messages left may not be answered. If this number has no bid information, call the Contract Specialist above.

(3) All **technical** questions on the specifications or drawings will be submitted in writing (or faxed) to:

Department of the Army
U.S. Army Engineer District, Sacramento
Corps of Engineers
ATTN: Contracting Division
1325 J Street
Sacramento CA 95814-2922
FAX: (916) 557-7854

(4) Please include the solicitation number, project title and location of project with your questions. Written inquiries must be received by this office not later than 14 calendar days prior to bid opening date/date set for receipt of offers.

(5) For prospective bidders with electronic mail capabilities, questions of a contractual or technical nature can be sent to rdonez@usace.mil. Please include the full name of your company, as well as telephone and fax numbers, in your correspondence.

(6) Oral explanations or instructions are not binding. Any information given to a bidder/offeror which impacts the bid/offer will be given in the form of a written amendment to the solicitation.

15. SAACONS 52.0214-4582 DIRECTIONS FOR SUBMITTING BIDS/PROPOSALS (APR 1992)

Envelopes containing bids/offers must be sealed, marked and addressed as follows:

MARK ENVELOPES:

Solicitation No. DACA05-98-B-0010
Bid Opening/Offer Closing Date: 98 JAN 29
Bid Opening/Offer Closing Time: 2:00 PM (LOCAL TIME)

ADDRESS ENVELOPES TO:

U.S. Army Engineer District, Sacramento
Utah Area Office
7227 6th Street, Bldg. 366
Hill Air Force Base, Utah 84056-5214

Handcarried bids shall be deposited with the Corps of Engineers at the above address prior to bid opening time. For bidders planning to handcarry bids to Hill AFB for the Bid Opening, be sure to plan your time sufficiently. It may take at least 45 minutes to process you through the Visitors' Center to allow entry onto the base. There are Visitors' Centers located at the South and West Gates of the base. Be sure to bring: (1) a valid driver's license, (2) a valid car registration, and (3) proof of insurance. If you do not have all of these documents, you will not be allowed entry onto the base. If the Visitors' Center requires you to have authorization from a Corps of Engineers employee, call (801) 777-2206 or (801) 825-1505.

16. FAR 52.236-27 SITE VISIT (CONSTRUCTION) (FEB 1995), ALTERNATE I (FEB 1995)

(a) The clauses at 52.236-2, Differing Site Conditions, and 52.236-3, Site Investigations and Conditions Affecting the Work, will be included in any contract awarded as a result of this solicitation. Accordingly, offerors or quoters are urged and expected to inspect the site where the work will be performed.

(b) An organized site visit has been schedule for--
Date & Time: 98 JAN 15 @ 10:00 a.m.

(c) Participants will meet at--
Location: Building 366, 7227 6th Street, Hill AFB, Utah.

17. SAACONS 52.0209-4501 CONTRACTOR RESPONSIBILITY, PREAWARD SURVEY (JUL 1995)

In order to determine a contractor's responsibility for purposes of contract award in accordance with FAR Part 9, the contractor is required to provide a statement regarding previous experience and past performance in performing comparable work, information related to the business organization, financial resources, and/or plant to be used in performing the work (see Attachments, Preaward Survey). The Preaward Survey is attached to the solicitation for information purposes only. It will be required from only the low bidder. After the Bid Opening, the Government will request this information from the low bidder if the low bidder has not had a contract with the Sacramento within the last twelve months and the Government will set a due date for its submission. The Preaward Survey is not required as part of the bid package. In order to be determined to be responsible a prospective contractor must:

a. Have adequate financial resources to perform the contract or the ability to obtain them.

b. Be able to comply with the required or proposed delivery or performance schedule, taking into consideration all existing commercial and governmental business commitments.

c. Have a satisfactory performance record. In making the determination of responsibility, the Government Contracting Officer shall consider relevant past performance information. A prospective contractor shall not be determined responsible or nonresponsible solely on the basis of a lack of relevant performance history except when there are special standards set forth in the solicitation which applies to all bidders that must be met in order to receive the award. These special standards may be necessary when unusual expertise or specialized facilities are necessary in the performance of the contract; therefore, in order to be determined to be responsible for that particular contract, the offeror must be able to meet those special standards. A prospective contractor that is or recently has been seriously deficient in contract performance shall be presumed to be nonresponsible unless the Contracting Officer determines that the circumstances were beyond the contractor's control or that the contractor has taken appropriate corrective action. Other responsibility considerations by the Contracting Officer will include past efforts by the contractor to apply sufficient tenacity and perseverance to perform acceptably, to meet quality requirements of contracts, and the contractor's past compliance with subcontracting plans (if required) under recent contracts.

d. Have a satisfactory record of integrity and business ethics.

e. Have the necessary organization, experience, accounting and operational controls, and technical skills, or the ability to obtain them (including, as appropriate, such elements as production control procedures, property control systems, quality assurance measures, and safety programs applicable to materials to be produced or services to be performed by the prospective contractor and subcontractors).

f. Have the necessary production, construction, and technical equipment and facilities, or the ability to obtain them.

g. Be otherwise qualified and eligible to receive an award under applicable laws and regulations.

If the contractor or subcontractor does not already have sufficient resources demonstrated in the completed Preaward Survey, acceptable evidence of "the ability to obtain" the required, adequate resources (all of the resources discussed in subparagraphs a, e, and f above) normally consists of a commitment or explicit arrangement that will be in existence at the time of contract award to rent, purchase or otherwise acquire the needed facilities, equipment, other resources, or personnel. See also DFARS 252.219-7009 in this Section.

18. FAR 52.211-14 NOTICE OF PRIORITY RATING FOR NATIONAL DEFENSE USE (SEP 1990)

Any contract awarded as a result of this solicitation will be ( ) DX rated order; (X) DO rated order certified for national defense use under the Defense Priorities and Allocations System (DPAS) (15 CFR Part 700), and the Contractor will be required to follow all of the requirements of this regulation.

19. DFARS 252.211-7002 AVAILABILITY FOR EXAMINATION OF SPECIFICATIONS, STANDARDS, PLANS, DRAWINGS, DATA ITEM DESCRIPTIONS, AND OTHER PERTINENT DOCUMENTS (DEC 1991)

The specifications, standards, plans, drawings, data item descriptions, and other pertinent documents cited in this solicitation are not available for distribution but may be examined at the following location:

US Army Engineer District, Sacramento

Plan Room
1325 J Street
Sacramento CA 95814-2922

20. SAACONS 52.0211-4805 AVAILABILITY OF SPECIFICATIONS, STANDARDS AND DESCRIPTIONS (OCT 1992)

(a) Specifications, standards and descriptions cited in this solicitation are available as indicated below:

(1) Unclassified Federal, Military and Other Specifications and Standards (Excluding Commercial) and Data Item Descriptions: Single copies of specifications cited in this solicitation may be obtained by submitting a written request to the supply point listed below. The request must contain the title of the specification, its number, date and applicable amendments. A telephone order entry system is available with the use of a touch tone telephone. A Customer Number is required to use this system and may be obtained by written request to the address listed below or by telephone (215) 697-2179. In case of urgency, telegraphic requests are acceptable.

Standardization Document
Order Desk, Building 4, Section D
700 Robbins Avenue
Philadelphia PA 19111-5094

Telex Number: 834295
Western Union Number: 710-670-1685
Telephone Number: (215) 697-3321
FAX Number: (215) 697-2978
Telephone Order Entry System (TOES) Numbers: (215) 697-1187 through and including (215) 697-1197

(b) Commercial Specifications, Standards and Descriptions: These specifications, standards and descriptions are not available from Government sources. They may be obtained from the publishers.

(c) The Department of Defense Index of Data Item Descriptions (TD-3) may be ordered on the DD Form 1425. The Department of Defense Index of Specifications and Standards (DODISS) may be purchased from the Superintendent of Documents, U.S. Government Printing Office, Washington, D.C. 20402.

(d) Corps of Engineers Publications: The "CRD" series of Corps of Engineers specifications are available for inspection at this office. Copies can be obtained from the U.S. Army Engineer Waterways Experiment Station, ATTN: Publications Distribution, Information Services Branch, P.O. Box 631, Vicksburg, Mississippi 39180. A copy of the Corps of Engineers manual, EM 385-1-1, entitled "Safety and Health Requirements Manual" will be sent to prospective bidders upon request to the Sacramento District Office.

21. SAACONS 52.0214-4583 TELEGRAPHIC BIDS/OFFERS (APR 1992)

TELEGRAPHIC BIDS/OFFERS ARE NOT ACCEPTABLE.

However, bids/offers may be modified or withdrawn by written or telegraphic notice. Any telegram to modify or withdraw a bid/offer sent to this office must be received in the office designated in the Invitation for Bids/Request for Proposal (IFB/RFP) for receipt of bids/offers not later than the exact date and time set for bid opening/receipt of proposals. A telegraphic modification or withdrawal of a bid/offer received in such office by telephone from the receiving telegraph office not later than the exact date and time set for bid opening/receipt of proposals shall be considered. However, the telephone message shall be confirmed by the telegraph company by sending a

copy of the written telegram that formed the basis for the telephone call. The written telegram shall be sealed in an envelope by a proper official and sent to the office designated in the IFB/RFP for receipt of bids/offers. The official shall write on the envelope (1) the date and time of receipt and by whom, and (2) the number of the IFB/RFP, and shall sign the envelope. The bidder/offeror is responsible to inform the telegraph company of these requirements. No one from this office will be dispatched to the local telegraph office to pick up any telegram for any reason.

22. SAACONS 52.0214-4584 FACSIMILE BIDS/OFFERS (APR 1992)

Facsimile bids/offers, modifications thereto, or cancellations of bids/offers will not be accepted.

23. FAR 52.216-1 TYPE OF CONTRACT (APR 1984)

The Government contemplates award of a firm, fixed-price contract resulting from this solicitation.

24. SAACONS 52.0219-4581 PREPARATION OF SUBCONTRACTING PLAN (APR 1994)

(a) See FAR 52.219-9, Section 00700, of this solicitation. Located in the Attachments Section of this solicitation is a sample Subcontracting Plan which will aid the Contractor in preparing a Subcontracting Plan in accordance with FAR 52.219-9(d)(1) through (d)(11). Subcontracting Plans will be developed considering only the subcontracts actually to be awarded. Subcontracting Plans are required only from large business firms if the contract price is over $1 million; they are not required from small business firms regardless of the contract price.

(b) The sample Subcontracting Plan is attached to this solicitation for information purposes. A Subcontracting Plan will be required only from the low bidder if the low bidder is a large business and the low bid is over $1 million. The Subcontracting Plan is not required from the low bidder until after the Bid Opening; it is not required as part of the bid package. After the Bid Opening, if the selected bidder fails to submit an acceptable plan within the time prescribed by the Contracting Officer, the bidder will be ineligible for award. Review of the Subcontracting Plan by the Government will be in accordance with FAR 19.705-4.

(c) A Subcontracting Plan which proposes goals less than the recommended goals below must contain support, in writing, for the lesser goals and discuss the Contractor’s good faith effort to meet the recommended goals.

(d) In accordance with FAR 19.704 if the contract contains options, the cumulative value of the basic contract and all options is considered in determining whether a Subcontracting Plan is necessary. If a plan is necessary, the Subcontracting Plan shall contain separate parts, one for the basic contract and one for each option. It is necessary to address planned subcontracting dollars and percentages of total to be awarded to small; small, disadvantaged; women-owned small; HBCU/MIs; and qualified nonprofit agencies for the blind and other severely disabled separately for the basic contract period and each option year. All other parts of the Subcontracting Plan only need to be addressed once.

(e) Subcontracts awarded to small, disadvantaged businesses; women-owned small businesses; HBCU/MIs; and qualified nonprofit agencies for the blind and other severely disabled count toward the overall small business goal. HBCU/MIs are counted as a subset of the small, disadvantaged goal. The Corps of Engineers has not been assigned a set goal for HBCU/MIs or qualified nonprofit agencies for the blind and other severely disabled.

(f) Qualified nonprofit agencies for the blind and other severely disabled that have been approved by the Committee for Purchase from People Who

Are Blind or Severely Disabled under the Javits-Wagner-O'Day Act (41 U.S.C. 46-48) are eligible as a result of Section 9077 of Pub. L. 102-395 and subsequent Appropriation Acts and Section 808 of Pub. L. 102-484 and 804 of Pub. L. 103-337 through September 30 1997 to participate in the program. Under this authority subcontracts awarded to such entities may be counted toward the prime contractor's small business subcontracting goal through fiscal year 1997.

(g) Contact - Mr. John Szabo (916)557-5202, Deputy for Small Business, with questions on the Subcontracting Plan requirements and further instructions on submission of Standard Forms 294 and 295 as required by FAR 52.219-9. These forms with clarifying instructions will be furnished by the Deputy for Small Business to the Contractor's Subcontracting Plan Administrator after contract award.

(h) The accepted Subcontracting Plan will be incorporated into and made a material part of the contract.

(i) The Corps of Engineers highly encourages all bidders/ offerors to meet the recommended subcontracting goals as follows:

Small Businesses	55.0%
Small, Disadvantaged Businesses	8.5%
Women-Owned Small Businesses	3.0%

The goals are calculated as a percentage of the TOTAL SUBCONTRACTING DOLLARS, NOT THE TOTAL CONTRACT AMOUNT.

NOTE: A CONTRACT AWARD BY THE GOVERNMENT TO A HIGHER EDUCATIONAL INSTITUTION (HEI) UNIVERSITY AND/OR COLLEGE WILL REQUIRED THE HEI TO CONSIDER AND AWARD 5% (TOTAL DOLLARS) TO HISTORICALLY BLACK COLLEGES, UNIVERSITIES AND MINORITY INSTITUTIONS (HBCU/MI).

25. FAR 52.222-23 NOTICE OF REQUIREMENT FOR AFFIRMATIVE ACTION TO ENSURE EQUAL EMPLOYMENT OPPORTUNITY (APR 1984)

(a) The offeror's attention is called to the Equal Opportunity clause and the Affirmative Action Compliance Requirements for Construction clause of this solicitation.

(b) The goals for minority and female participation, expressed in percentage terms for the Contractor's aggregate workforce in each trade on all construction work in the covered area, are as follows:

Goals for minority participation for each trade	Goals for female participation for each trade
6.0%	6.9%

These goals are applicable to all the Contractor's construction work performed in the covered area. If the Contractor performs construction work in a geographical area located outside of the covered area, the Contractor shall apply the goals established for the geographical area where the work is actually performed. Goals are published periodically in the Federal Register in notice form, and these notices may be obtained from any Office of Federal Contract Compliance Programs office.

(c) The Contractor's compliance with Executive Order 11246, as amended, and the regulations in 41 CFR 60-4 shall be based on (1) its implementation of the Equal Opportunity clause, (2) specific affirmative action obligations

required by the clause entitled "Affirmative Action Compliance Requirements for Construction," and (3) its efforts to meet the goals. The hours of minority and female employment and training must be substantially uniform throughout the length of the contract, and in each trade. The Contractor shall make a good faith effort to employ minorities and women evenly on each of its projects. The transfer of minority or female employees or trainees from Contractor to Contractor, or from project to project, for the sole purpose of meeting the Contractor's goals shall be a violation of the contract, Executive Order 11246, as amended, and the regulations in 41 CFR 60-4. Compliance with the goals will be measured against the total work hours performed.

(d) The Contractor shall provide written notification to the Director, Office of Federal Contract Compliance Programs, within 10 working days following award of any construction subcontract in excess of $10,000 at any tier for construction work under the contract resulting from this solicitation. The notification shall list the--

(1) Name, address, and telephone number of the subcontractor;
(2) Employer's identification number of the subcontractor;
(3) Estimated dollar amount of the subcontract;
(4) Estimated starting and completion dates of the subcontract; and
(5) Geographical area in which the subcontract is to be performed.

(e) As used in this Notice, and in any contract resulting from this solicitation, the "covered area" is Davis, Salt Lake, Tooele, and Weber counties, Utah.

26. SAACONS 52.0228-4504 PERFORMANCE AND PAYMENT BONDS (AUG 1991)

The bidder/offeror whose bid/offer is accepted will, within the time established in the bid, enter into a written contract with the Government and furnish performance and payment bonds on Government Standard Forms in the amounts indicated.

Within ten (10) calendar days after award and prior to Notice to Proceed the contractor shall furnish two bonds, each with good and sufficient surety or sureties acceptable to the Government, namely a performance bond (Standard Form 25) and a payment bond (Standard Form 25-A). The penal sum of such bonds will be as follows:

a. Performance Bond. The penal amount of performance bond shall be one hundred percent (100%) of the original contract price.

b. Payment Bond. The penal amount of payment bond shall equal (i)fifty percent (50%) of the contract price when the contract price is $1,000,000 or less; (ii) forty percent (40%) of the contract price when the contract price is in excess of $1,000,000 but not more than $5,000,000; (iii) $2,500,000 when the contract price is more than $5,000,000.

Any bonds furnished will be furnished by the contractor to the Government prior to Notice to Proceed and commencement of contract performance.

27. SAACONS 52.0228-4506 INDIVIDUAL SURETIES IN SUPPORT OF BID BONDS (AUG 1991)

Bidders/offerors utilizing individual sureties in support of a bid bond shall include a Standard Form (SF) 28 (Affidavit of Individual Surety), accompanied by a pledge of acceptable assets from each person acting as an individual surety, and include these with the SF 24 (Bid Bond), and the bid itself (see clause titled "Pledges of Assets," FAR 52.228-11).

Pledges of acceptable assets shall be in the form of (1) evidence of an escrow account and/or (2) a recorded lien on real estate. If this is an IFB, failure to provide pledges of acceptable assets, with the bid, in the specified form, accompanied by a properly executed SF 24 and SF 28, will render the bidder nonresponsible and thus ineligible for award. If this is an

RFP, failure to provide required documentation described herein may cause the offeror to be deemed "unacceptable".

28. SAACONS 52.228-4507 BID GUARANTEE FORM AND AMOUNT (JAN 1993)

When bids/proposals exceed $25,000, the offeror shall furnish a separate bid guarantee in accordance with the solicitation provision titled "Bid Guarantee", FAR 52.228-1. In accordance with FAR 28.101-2 the bid guarantee amount shall be at least 20 percent of the "bid price" but shall not exceed $3 million. When the penal sum is expressed as a percentage, a maximum dollar limitation may be stated. If there are option line items on the Pricing Schedule (Section 00010), the term "bid price" is hereby defined as the total bid not to include any amount for line items designated as "options". In bids/proposals that contain "additives", the "bid price" is defined as the total of all bid items including additive line items. FAR 28.106-1 states that a Standard Form (SF) 24 shall be used for the bid bond. In accordance with FAR 28.202(a)(1), corporate sureties utilized must appear on the list contained in the Department of Treasury Circular 570 titled "Companies Holding Certificates of Authority as Acceptable Sureties on Federal Bonds and Acceptable Reinsuring Companies."

29. DFARS 252.228-7004 BONDS OR OTHER SECURITY (DEC 1991)

(a) Offerors shall furnish a bid guarantee in the amount of 20% of bid/offer with their bids/offers. The offeror receiving notice of award shall furnish--

(1) A performance bond in the penal amount of 100% of contract price; and

(2) Payment in full of any sum due the Government.

(b) The Contractor shall furnish the performance bond to the Contracting Officer within ten (10) days after receipt of the notice of award. The Contracting Officer will not issue the notice to proceed until receipt of an acceptable performance bond and payment of any sum due the Government.

(c) Bonds supported by sureties whose names appear on the list contained in Treasury Department Circular 570 are acceptable. Performance bonds from individual sureties are acceptable if each person acting as a surety provides a SF 28, Affidavit of Individual Surety, and a pledge of assets acceptable to the Contracting Officer.

30. FAR 52.233-2 SERVICE OF PROTEST (AUG 1996)

(a) Protests, as defined in section 33.101 of the Federal Acquisition Regulation, that are filed directly with an agency, and copies of any protests that are filed with the General Accounting Office (GAO), shall be served on the Contracting Officer (addressed as follows) by obtaining written and dated acknowledgment of receipt from:

Contracting Officer
1325 J Street, Rm 878
Sacramento, California 95814

(b) The copy of any protest shall be received in the office designated above within one day of filing a protest with the GAO.

31. SAACONS 52.0236-4507 ACCEPTANCE OF OFFERS (AUG 1991)

A written award or acceptance of an offer, mailed or otherwise furnished to the successful offeror within the time for acceptance specified in the offer, shall result in a binding contract without further action by either party.

32. FAR 52.252-3 ALTERATIONS IN SOLICITATION (APR 1984)

Portions of this solicitation are altered as follows: N/A

33. FAR 52.252-5 AUTHORIZED DEVIATIONS IN PROVISIONS (APR 1984)

(a) The use in this solicitation of any Federal Acquisition Regulation (48 CFR Chapter 1) provision with an authorized deviation is indicated by the addition of "(DEVIATION)" after the date of the provision.

(b) The use in this solicitation of any (48 CFR Chapter 2) provision with an authorized deviation is indicated by the addition of "(DEVIATION)" after the name of the regulation.

EVALUATION CRITERIA FOR AWARD:

34. SAACONS 52.0214-4503 EVALUATION FOR AWARD (JAN 1991)

The Government contemplates award of one contract to the responsive, responsible bidder who submits the low bid for the total of the following items in Pricing Schedule:

All line items listed in Pricing Schedule.

If the solicitation's Pricing Schedule contains options, see evaluation of options clause for information on the procedure used by the Government to determine "low bid".

35. FAR 52.217-5 EVALUATION OF OPTIONS (JUL 1990)

Except when it is determined in accordance with FAR 17.206(b) not to be in the Government's best interests, the Government will evaluate offers for award purposes by adding the total price for all options to the total price for the basic requirement. Evaluation of options will not obligate the Government to exercise the option(s).

END OF SECTION

SECTION 00600

REPRESENTATIONS, CERTIFICATIONS AND OTHER STATEMENTS OF BIDDERS/OFFERORS

SECTION 00600

REPRESENTATIONS, CERTIFICATIONS AND OTHER STATEMENTS OF BIDDERS/OFFERORS

1. FAR 52.252-1 SOLICITATION PROVISIONS INCORPORATED BY REFERENCE (JUN 1988)

This solicitation incorporates one or more solicitation provisions by reference, with the same force and effect as if they were given in full text. Upon request, the Contracting Officer will make their full text available.

SOLICITATION PROVISIONS BY REFERENCE:

2. DFARS 252.209-7001 DISCLOSURE OF OWNERSHIP OR CONTROL BY THE GOVERNMENT OF A TERRORIST COUNTRY (SEP 1994)

3. FAR 52.214-17 AFFILIATED BIDDERS (APR 1984) (APPLICABLE IF SEALED BIDDING)

4. FAR 52.222-21 CERTIFICATION OF NONSEGREGATED FACILITIES (APR 1984)

5. FAR 52.223-5 POLLUTION PREVENTION AND RIGHT-TO-KNOW INFORMATION (MAR 1997) (APPLICABLE IN ALL SOLICITATIONS AND CONTRACTS THAT PROVIDE FOR PERFORMANCE, IN WHOLE OR IN PART, ON A FEDERAL FACILITY)

THE FOLLOWING SOLICITATION PROVISIONS ARE INCLUDED IN FULL TEXT

6. SAACONS 52.0201.4801 SUBMITTAL INFORMATION (NOV 1993)
7. FAR 52.203-2 CERTIFICATE OF INDEPENDENT PRICE DETERMINATION (APR 1985)
8. FAR 52.203-11 CERTIFICATION AND DISCLOSURE REGARDING PAYMENTS TO INFLUENCE CERTAIN FEDERAL TRANSACTIONS (APR 1991)
9. FAR 52.204-3 TAXPAYER IDENTIFICATION (MAR 1994)
10. FAR 52.204-5 WOMEN-OWNED BUSINESS (OCT 1995)
11. FAR 52.209-5 CERTIFICATION REGARDING DEBARMENT, SUSPENSION, PROPOSED DEBARMENT, AND OTHER RESPONSIBILITY MATTERS (MAR 1996)
12. FAR 52.214-2 TYPE OF BUSINESS ORGANIZATION--SEALED BIDDING (JUL 1987)
13. FAR 52.219-1 SMALL BUSINESS PROGRAM REPRESENTATION (JAN 1997)
14. FAR 52.219-2 EQUAL LOW BIDS (OCT 1995)
15. FAR 52.219-19 SMALL BUSINESS CONCERN REPRESENTATION FOR THE SMALL BUSINESS COMPETITIVENESS DEMONSTRATION PROGRAM (JAN 1997)
16. DFARS 252.219-7000 SMALL DISADVANTAGED BUSINESS CONCERN REPRESENTATION (DOD CONTRACTS (JUN 1997)
17. FAR 52.222-22 PREVIOUS CONTRACTS AND COMPLIANCE REPORTS (APR 1984)
18. FAR 52.223-1 CLEAN AIR AND WATER CERTIFICATION (APR 1984)
19. FAR 52.223-3 HAZARDOUS MATERIAL IDENTIFICATION AND MATERIAL SAFETY DATA (JAN 1997)
20. FAR 52.223-13 CERTIFICATION OF TOXIC CHEMICAL RELEASE REPORTING (OCT 1996)
21. DFARS 252.223-7001 HAZARD WARNING LABELS (DEC 1991)

22.	52.225-7006	BUY AMERICAN ACT--TRADE AGREEMENTS--BALANCE OF PAYMENTS PROGRAM CERTIFICATE (JUN 1997)
23.	DFARS 252.225-7035	BUY AMERICAN ACT--NORTH AMERICAN FREE TRADE AGREEMENT IMPLEMENTATION ACT--BALANCE OF PAYMENTS PROGRAM CERTIFICATE (MAY 1995)
24.	DFARS 252.247-7022	REPRESENTATION OF EXTENT OF TRANSPORTATION BY SEA (AUG 1992)

FULL TEXT SOLICITATION PROVISIONS:

6. SAACONS 52.0201.4801 SUBMITTAL INFORMATION (NOV 1993)

Solicitation Number: _____

Offeror's Name, Address, Telephone Number, and Fax Number:

_____

_____

_____

_____

_____
Name of Person to Contact Telephone Number

_____
Fax Number

Commercial & Government Entity (CAGE) Code, if known (see Section 00100):

_____

DUNS Number, if known:

_____

7. FAR 52.203-2 CERTIFICATE OF INDEPENDENT PRICE DETERMINATION (APR 1985)

(a) The offeror certifies that--

(1) The prices in this offer have been arrived at independently, without, for the purpose of restricting competition, any consultation, communication, or agreement with any other offeror or competitor relating to (i) those prices, (ii) the intention to submit an offer, or (iii) the methods or factors used to calculate the prices offered;

(2) The prices in this offer have not been and will not be knowingly disclosed by the offeror, directly or indirectly, to any other offeror or competitor before bid opening (in the case of a sealed bid solicitation) or contract award (in the case of a negotiated solicitation) unless otherwise required by law; and

(3) No attempt has been made or will be made by the offeror to induce any other concern to submit or not to submit an offer for the purpose of restricting competition.

(b) Each signature on the offer is considered to be a certification by the signatory that the signatory--

(1) Is the person in the offeror's organization responsible for determining the prices being offered in this bid or proposal, and that the signatory has not participated and will not participate in any action contrary to subparagraphs (a)(1) through (a)(3) above; or

(2)(i) Has been authorized, in writing, to act as agent for the following principals in certifying that those principals have not participated, and will not participate in any action contrary to subparagraphs (a)(1) through (a)(3) above_____
(insert full name of person(s) in the offeror's organization responsible for determining the prices offered in this bid or proposal, and the title of his or her position in the offeror's organization);

(ii) As an authorized agent, does certify that the principals named in subdivision (b)(2)(i) above have not participated, and will not participate, in any action contrary to subparagraphs (a)(1) through (a)(3) above; and

(iii) As an agent, has not personally participated, and will not participate, in any action contrary to subparagraphs (a)(1) through (a)(3) above.

(c) If the offeror deletes or modifies subparagraph (a)(2) above, the offeror must furnish with its offer a signed statement setting forth in detail the circumstances of the disclosure.

8. FAR 52.203-11 CERTIFICATION AND DISCLOSURE REGARDING PAYMENTS TO INFLUENCE CERTAIN FEDERAL TRANSACTIONS (APR 1991)

(a) The definitions and prohibitions contained in the clause, at FAR 52.203-12, Limitation on Payments to Influence Certain Federal Transactions, included in this solicitation, are hereby incorporated by reference in paragraph (b) of this certification.

(b) The offeror, by signing its offer, hereby certifies to the best of his or her knowledge and belief that on or after December 23, 1989,--

(1) No Federal appropriated funds have been paid or will be paid to any person for influencing or attempting to influence an officer or employee of any agency, a Member of Congress, an officer or employee of Congress, or an employee of a Member of Congress on his or her behalf in connection with the awarding of any Federal contract, the making of any Federal grant, the making of any Federal loan, the entering into of any cooperative agreement, and the extension, continuation, renewal, amendment or modification of any Federal contract, grant, loan, or cooperative agreement;

(2) If any funds other than Federal appropriated funds (including profit or fee received under a covered Federal transaction) have been paid, or will be paid, to any person for influencing or attempting to influence an officer or employee of any agency, a Member of Congress, an officer or employee of Congress, or an employee of a Member of Congress on his or her behalf in connection with this solicitation, the offeror shall complete and submit, with its offer, OMB standard form LLL, Disclosure of Lobbying Activities, to the Contracting Officer; and

(3) He or she will include the language of this certification in all subcontract awards at any tier and require that all recipients of subcontract awards in excess of $100,000 shall certify and disclose accordingly.

(c) Submission of this certification and disclosure is a prerequisite for making or entering into this contract imposed by section 1352, title 31, United States Code. Any person who makes an expenditure prohibited under this provision or who fails to file or amend the disclosure form to be filed or amended by this provision, shall be subject to a civil penalty of not less than $10,000, and not more than $100,000, for each such failure.

9. FAR 52.204-3 TAXPAYER IDENTIFICATION (MAR 1994)

(a) Definitions.

"Common parent," as used in this solicitation provision, means that corporate entity that owns or controls an affiliated group of corporations that files its Federal income tax returns on a consolidated basis, and of which the offeror is a member.

"Corporate status," as used in this solicitation provision, means a designation as to whether the offeror is a corporate entity, an unincorporated entity (e.g., sole proprietorship or partnership), or a corporation providing medical and health care services.

"Taxpayer Identification Number (TIN)," as used in this solicitation provision, means the number required by the IRS to be used by the offeror in reporting income tax and other returns.

(b) All offerors are required to submit the information required in paragraphs (c) through (e) of this solicitation provision in order to comply

with reporting requirements of 26 U.S.C. 6041, 6041A, and 6050M and implementing regulations issued by the Internal Revenue Service (IRS). If the resulting contract is subject to the reporting requirements described in FAR 4.903, the failure or refusal by the offeror to furnish the information may result in a 31 percent reduction of payments otherwise due under the contract.

(c) Taxpayer Identification Number (TIN).

/_/ TIN: _____.

/_/ TIN has been applied for.

/_/ TIN is not required because:

/_/ Offeror is a nonresident alien, foreign corporation, or foreign partnership that does not have income effectively connected with the conduct of a trade or business in the U.S. and does not have an office or place of business or a fiscal paying agent in the U.S.;

/_/ Offeror is an agency or instrumentality of a foreign government;

/_/ Offeror is an agency or instrumentality of a Federal, state, or local government;

/_/ Other. State basis. _____

(d) Corporate Status.

/_/ Corporation providing medical and health care services, or engaged in the billing and collecting of payments for such services;

/_/ Other corporate entity;

/_/ Not a corporate entity;

/_/ Sole proprietorship

/_/ Partnership

/_/ Hospital or extended care facility described in 26 CFR 501(c)(3) that is exempt from taxation under 26 CFR 501(a).

(e) Common Parent.

/_/ Offeror is not owned or controlled by a common parent as defined in paragraph (a) of this clause.

/_/ Name and TIN of common parent:

Name _____

TIN _____

10. FAR 52.204-5 WOMEN-OWNED BUSINESS (OCT 1995)

(a) Representation. The offeror represents that it ( ) is, ( ) is not a women-owned business concern.

(b) Definition. "Women-owned business concern," as used in this provision, means a concern which is at least 51 percent owned by o ne or more women; or in the case of any publicly owned business, at least 51 percent of the stock of which is owned by one or more women; and whose management and daily business operations are controlled by one or more women.

11. FAR 52.209-5 CERTIFICATION REGARDING DEBARMENT, SUSPENSION, PROPOSED DEBARMENT, AND OTHER RESPONSIBILITY MATTERS (MAR 1996)

(a)(1) The Offeror certifies, to the best of its knowledge and belief, that--

(i) The Offeror and/or any of its Principals--

(A) Are / / are not / / presently debarred, suspended, proposed for debarment, or declared ineligible for the award of contracts by any Federal agency;

(B) Have / / have not / /, within a three-year period preceding this offer, been convicted of or had a civil judgment rendered against them for: commission of fraud or a criminal offense in connection with obtaining, attempting to obtain, or performing a public (Federal, state, or local) contract or subcontract; violation of Federal or state antitrust statutes relating to the submission of offers; or commission of embezzlement, theft, forgery, bribery, falsification or destruction of records, making false statements, or receiving stolen property; and

(C) Are / / are not / / presently indicted for, or otherwise criminally or civilly charged by a governmental entity with, commission of any of the offenses enumerated in subdivision (a)(1)(i)(B) of this provision.

(ii) The Offeror has / / has not / /, within a three-year period preceding this offer, had one or more contracts terminated for default by any Federal agency.

(2) "Principals," for the purposes of this certification, means officers; directors; owners; partners; and, persons having primary management or supervisory responsibilities within a business entity (e.g., general manager; plant manager; head of a subsidiary, division, or business segment, and similar positions).

THIS CERTIFICATION CONCERNS A MATTER WITHIN THE JURISDICTION OF AN AGENCY OF THE UNITED STATES AND THE MAKING OF A FALSE, FICTITIOUS, OR FRAUDULENT CERTIFICATION MAY RENDER THE MAKER SUBJECT TO PROSECUTION UNDER SECTION 1001, TITLE 18, UNITED STATES CODE.

(b) The Offeror shall provide immediate written notice to the Contracting Officer if, at any time prior to contract award, the Offeror learns that its certification was erroneous when submitted or has become erroneous by reason of changed circumstances.

(c) A certification that any of the items in paragraph (a) of this provision exists will not necessarily result in withholding of an award under this solicitation. However, the certification will be considered in connection with a determination of the Offeror’s responsibility. Failure of the Offeror to furnish a certification or provide such additional information as requested by the Contracting Officer may render the Offeror nonresponsible.

(d) Nothing contained in the foregoing shall be construed to require establishment of a system of records in order to render, in good faith, the certification required by paragraph (a) of this provision. The knowledge and information of an Offeror is not required to exceed that which is normally possessed by a prudent person in the ordinary course of business dealings.

(e) The certification in paragraph (a) of this provision is a material representation of fact upon which reliance was placed when making award. If it is later determined that the Offeror knowingly rendered an erroneous certification, in addition to other remedies available to the Government, the Contracting Officer may terminate the contract resulting from this solicitation for default.

12. FAR 52.214-2 TYPE OF BUSINESS ORGANIZATION--SEALED BIDDING (JUL 1987)

The bidder, by checking the applicable box, represents that--

(a) It operates as /_/ a corporation incorporated under the laws of the State of _____, /_/ an individual, /_/ a partnership, /_/ a nonprofit organization, or /_/ a joint venture; or

(b) If the bidder is a foreign entity, it operates as /_/ an individual, /_/ a partnership, /_/ a nonprofit organization, /_/ a joint venture, or /_/ a corporation, registered for business in _____. (country)

13. FAR 52.219-1 SMALL BUSINESS PROGRAM REPRESENTATION (JAN 1997)

(a)(1) The standard industrial classification (SIC) code for this acquisition is 1542 - General Contractors-Nonresidential Buildings, Other Than Industrial Buildings and Warehouses.

(2) The small business size standard is $17,000,000

(3) The small business size standard for a concern which submits an offer in its own name, other than on a construction or service contract, but which proposes to furnish a product which it did not itself manufacture, is 500 employees.

(b) Representations. (1) The offeror represents as part of its offer that it / / is, / / is not a small business concern.

(2) (Complete only if offeror represented itself as a small business concern in block (b)(1) of this section.) The offeror represents as part of its offer that it / / is, / / is not a women-owned small business concern.

(c) Definitions. “Joint venture,” for purposes of a small disadvantaged business (SDB) set-aside or price evaluation preference (as prescribed at 13 CFR 124.321), is a concern that is owned and controlled by one or more socially and economically disadvantaged individuals entering into a joint venture agreement with one or more business concerns and is considered to be affiliated for size purposes with such other concern(s). The combined annual receipts or employees of the concerns entering into the joint venture must meet the applicable size standard corresponding to the SIC code designated for the contract. The majority of the venture’s earnings must accrue directly to the socially and economically disadvantaged individuals in the SDB concerns(s) in the joint venture. The percentage of the ownership involvement in a joint venture by disadvantaged individuals must be at least 51 percent.

"Small business concern," as used in this provision, means a concern, including its affiliates, that is independently owned and operated, not dominant in the field of operation in which it is bidding on Government contracts, and qualified as a small business under the criteria in 13 CFR Part 121 and the size standard in paragraph (a) of this provision.

"Small disadvantaged business concern," as used in this provision, means a small business concern that (1) is at least 51 percent unconditionally owned by one or more individuals who are both socially and economically disadvantaged, or a publicly owned business having at least 51 percent of its stock unconditionally owned by one or more socially and economically disadvantaged individuals, and (2) has its management and daily business controlled by one or more such individuals. This term also means a small business concern that is at least 51 percent unconditionally owned by an economically disadvantaged Indian tribe or Native Hawaiian Organization, or a publicly owned business having at least 51 percent of its stock unconditionally owned by one or more of these entities, which has its management and daily business controlled by members of an economically disadvantaged Indian tribe or Native Hawaiian Organization, and which meets the requirements of 13 CFR Part 124.

"Women-owned small business concern," as used in this provision, means a small business concern--

(1) Which is at least 51 percent owned by one or more women or, in the case of any publicly owned business, at least 51 percent of the stock of which is owned by one or more women; and

(2) Whose management and daily business operations are controlled by one or more women.

(d) Notice. (1) If this solicitation is for supplies and has been set aside, in whole or in part, for small business concerns, then the clause in this solicitation providing notice of the set-aside contains restrictions on the source of the end items to be furnished.

(2) Under 15 U.S.C. 645(d), any person who misrepresents a firm's status as a small or small disadvantaged business concern in order to obtain a contract to be awarded under the preference programs established pursuant to sections 8(a), 8(d), 9, or 15 of the Small Business Act or any other provision of Federal law that specifically references section 8(d) for a definition of program eligibility, shall--

(i) Be punished by imposition of a fine, imprisonment, or both;

(ii) Be subject to administrative remedies, including suspension and debarment; and

(iii) Be ineligible for participation in programs conducted under the authority of the Act.

14. FAR 52.219-2 EQUAL LOW BIDS (OCT 1995)

(a) This provision applies to small business concerns only.

(b) The bidder's status as a labor surplus area (LSA) concern may affect entitlement to award in case of tie bids. If the bidder wishes to be

considered for this priority, the bidder must identify, in the following space, the LSA in which the costs to be incurred on account of manufacturing or production (by the bidder of the first-tier subcontractors) amount to more than 50 percent of the contract price.

_____ _____

_____ _____

(c) Failure to identify the labor surplus areas as specified in paragraph (b) of this provision will preclude the bidder from receiving priority consideration. If the bidder is awarded a contract as a result of receiving priority consideration under this provision and would not have otherwise received award, the bidder shall perform the contract or cause the contract to be performed in accordance with the obligations of an LSA concern.

15. FAR 52.219-19 SMALL BUSINESS CONCERN REPRESENTATION FOR THE SMALL BUSINESS COMPETITIVENESS DEMONSTRATION PROGRAM (JAN 1997)

(a) Definition.

"Emerging small business" as used in this solicitation, means a small business concern whose size is no greater than 50 percent of the numerical size standard applicable to the standard industrial classification code assigned to a contracting opportunity.

(b) (Complete only if the Offeror has represented itself under the provision at 52.219-1 as a small business concern under the size standards of this solicitation.)

The Offeror represents and certifies as part of its offer that it /__/ is, /__/ is not an emerging small business.

(c) (Complete only if the Offeror is a small business or an emerging small business, indicating its size range.)

Offeror's number of employees for the past 12 months (check this column if size standard stated in solicitation is expressed in terms of number of employees) or Offeror's average annual gross revenue for the last 3 fiscal years (check this column if size standard stated in solicitation is expressed in terms of annual receipts). (Check one of the following.)

No. of Employees	Avg. Annual Gross Revenues
____50 or fewer	_____$1 million or less
____51-100	_____$1,000,001-$2 million
____101-250	_____$2,000,001-$3.5 million
____251-500	_____$3,500,001-$5 million
____501-750	_____$5,000,001-$10 million
____751-1,000	_____$10,000,001-$17 million
____Over 1,000	_____Over $17 million

16. DFARS 252.219-7000 SMALL DISADVANTAGED BUSINESS CONCERN REPRESENTATION (DOD CONTRACTS (JUN 1997)

(a) Definition.

"Small disadvantaged business concern," as used in this provision, means a small business concern, owned and controlled by individuals who are both socially and economically disadvantaged, as defined by the Small Business Administration at 13 CFR Part 124, the majority of earnings of which directly accrue to such individuals. This term also means a small business concern owned and controlled by an economically disadvantaged Indian tribe or Native Hawaiian organization which meets the requirements of 13 CFR 124.112 or 13 CFR

124.113, respectively. In general, 13 CFR Part 124 describes a small disadvantaged business concern as a small business concern--

(1) Which is at least 51 percent unconditionally owned by one or more socially and economically disadvantaged individuals; or

(2) In the case of any publicly owned business, at least 51 percent of the voting stock is unconditionally owned by one or more socially and economically disadvantaged individuals; and

(3) Whose management and daily business operations are controlled by one or more such individuals.

(b) Representations. Check the category in which your ownership falls--

_____ Subcontinent Asian (Asian-Indian) American (U.S. citizen with origins from India, Pakistan, Bangladesh, Sri Lanka, Bhutan, the Maldives Islands, or Nepal)

_____ Asian-Pacific American (U.S. citizen with origins from Japan, China, the Philippines, Vietnam, Korea, Samoa, Guam, U.S. Trust Territory of the Pacific Islands (Republic of Palau), the Northern Mariana Islands, Laos, Kampuchea (Cambodia), Taiwan, Burma, Thailand, Malaysia, Indonesia, Singapore, Brunei, Republic of the Marshall Islands, the Federated States of Micronesia, Macao, Hong Kong, Fiji, Tonga, Kiribati, Tuvalu, or Nauru)

_____ Black American (U.S. citizen)

_____ Hispanic American (U.S. citizen with origins from South America, Central America, Mexico, Cuba, the Dominican Republic, Puerto Rico, Spain, or Portugal)

_____ Native American (American Indians, Eskimos, Aleuts, or Native Hawaiians, including Indian tribes or Native Hawaiian organizations)

_____ Individual/concern, other than one of the preceding, currently certified for participation in the Minority Small Business and Capital Ownership Development Program under Section 8(a) of the Small Business Act

_____ Other

(c) Complete the following--

(1) The offeror is_____ is not _____a small disadvantaged business concern.

(2) The Small Business Administration (SBA) has_____has not _____made a determination concerning the offeror's status as a small disadvantaged business concern. If the SBA has made a determination, the date of the determination was_____and the offeror--

_____ Was found by SBA to be socially and economically disadvantaged and no circumstances have changed to vary that determination.

_____ Was found by SBA not to be socially and economically disadvantaged but circumstances which caused the determination have changed.

(d) Penalties and Remedies. Anyone who misrepresents the status of a concern as a small disadvantaged business for the purpose of securing a contract or subcontract shall--

(1) Be punished by imposition of a fine, imprisonment, or both;

(2) Be subject to administrative remedies, including suspension and debarment; and

(3) Be ineligible for participation in programs conducted under authority of the Small Business Act.

17. FAR 52.222-22 PREVIOUS CONTRACTS AND COMPLIANCE REPORTS (APR 1984)

The offeror represents that--

(a) It /_/ has, /_/ has not, participated in a previous contract or subcontract subject either to the Equal Opportunity clause of this solicitation, the clause originally contained in Section 310 of Executive Order No. 10925, or the clause contained in Section 201 of Executive Order No. 11114;

(b) It /_/ has, /_/ has not, filed all required compliance reports; and

(c) Representations indicating submission of required compliance reports, signed by proposed subcontractors, will be obtained before subcontract awards.

18. FAR 52.223-1 CLEAN AIR AND WATER CERTIFICATION (APR 1984)

The Offeror certifies that--

(a) Any facility to be used in the performance of this proposed contract is /_/ is not /_/ listed on the Environmental Protection Agency (EPA) List of Violating Facilities;

(b) The Offeror will immediately notify the Contracting Officer, before award, of the receipt of any communication from the Administrator, or a designee, of the EPA, indicating that any facility that the Offeror proposes to use for the performance of the contract is under consideration to be listed on the EPA List of Violating Facilities; and

(c) The Offeror will include a certification substantially the same as this certification, including this paragraph (c), in every nonexempt subcontract.

19. FAR 52.223-3 HAZARDOUS MATERIAL IDENTIFICATION AND MATERIAL SAFETY DATA (JAN 1997)

(a) "Hazardous material," as used in this clause, includes any material defined as hazardous under the latest version of Federal Standard No. 313 (including revisions adopted during the term of the contract).

(b) The Offeror must list any hazardous material, as defined in paragraph (a) of this clause, to be delivered under this contract. The hazardous material shall be properly identified and include any applicable identification number, such as National Stock Number or Special Item Number. This information shall also be included on the Material Safety Data Sheet submitted under this contract.

Material (If none, insert None)	Identification No.
_____	_____
_____	_____
_____	_____

(c) This list must be updated during performance of the contract whenever the Contractor determines that any other material to be delivered under this contract is hazardous.

(d) The apparently successful Offeror agrees to submit, for each item as required prior to award, a Material Safety Data Sheet, meeting the requirements of 29 CFR 1910.1200(g) and the latest version of Federal Standard No. 313, for all hazardous material identified in paragraph (b) of this clause. Data shall be submitted in accordance with Federal Standard No. 313, whether or not the apparently successful Offeror is the actual manufacturer of these items. Failure to submit the Material Safety Data Sheet prior to award may result in the apparently successful Offeror being considered nonresponsible and ineligible for award.

(e) If, after award, there is a change in the composition of the item(s) or a revision to Federal Standard No. 313, which renders incomplete or inaccurate the data submitted under paragraph (d) of this clause or the certification submitted under paragraph (c) of this clause, the Contractor shall promptly notify the Contracting Officer and resubmit the data.

(f) Neither the requirements of this clause nor any act or failure to act by the Government shall relieve the Contractor of any responsibility or liability for the safety of Government, Contractor, or subcontractor personnel or property.

(g) Nothing contained in this clause shall relieve the Contractor from complying with applicable Federal, State, and local laws, codes, ordinances, and regulations (including the obtaining of licenses and permits) in connection with hazardous material.

(h) The Government’s rights in data furnished under this contract with respect to hazardous material are as follows:

(1) To use, duplicate and disclose any data to which this clause is applicable. The purposes of this right are to--

(i) Apprise personnel of the hazards to which they may be exposed in using, handling, packaging, transporting, or disposing of hazardous materials;

(ii) Obtain medical treatment for those affected by the material; and

(iii) Have others use, duplicate, and disclose the data for the Government for these purposes.

(2) To use, duplicate, and disclose data furnished under this clause, in accordance with subparagraph (h)(1) of this clause, in precedence over any other clause of this contract providing for rights in data.

(3) The Government is not precluded from using similar or data acquired from other sources.

20. FAR 52.223-13 CERTIFICATION OF TOXIC CHEMICAL RELEASE REPORTING (OCT 1996)

(a) Submission of this certification is a prerequisite for making or entering into this contract imposed by Executive Order 12969, August 8, 1995.

(b) By signing this offer, the offeror certifies that--

(1) As the owner or operator of facilities that will be used in for performance of this contract that are subject to the filing and reporting requirements described in section 3123 of the Emergency Planning and Community Right-to-Know Act of 1986 (EPCRA) (42 U.S.C. 11023) and section 6607 of the Pollution Prevention Act of 1990 (PPA) (42 U.S.C. 13106), the offeror will file and continue to file for such facilities for the life of the contract the Toxic Chemical Release Inventory Form (Form R) as described in sections 313(a) and (g) of the EPCRA and section 6607 of PPA; or

(2) None of its owned or operated facilities to be used in the performance of this contract is subject to the Form R filing and reporting requirements because each such facility is exempt for at least one of the following reasons: (Check each block that is applicable.)

( ) (i) The facility does not manufacture, process, or otherwise use any toxic chemicals listed under section 313(c) of EPCRA, 42 U.S.C. 11023(c);

( ) (ii) The facility does not have 10 or more full-time employees as specified in section 313(b)(1)(A) of EPCRA, 42 U.S.C. 11023(b)(1)(A);

( ) (iii) The facility does not meet the reporting thresholds of toxic chemicals established under section 313(f) of EPCRA, 42 U.S.C. 11023(f) (including the alternate thresholds at 40 CFR 372.27, provided an appropriate certification form has been filed with EPA);

( ) (iv) The facility does not fall within Standard Industrial Classification Code (SIC) designations 20 through 39 as set forth in section 19.102 of the Federal Acquisition Regulation; or

( ) (v) The facility is not located within any State of the United States, the District of Columbia, the Commonwealth of Puerto Rico, Guam, American Samoa, the United States Virgin Islands, the Northern Mariana Islands, or any other territory or possession over which the United States has jurisdiction.

21. DFARS 252.223-7001 HAZARD WARNING LABELS (DEC 1991)

(a) "Hazardous material," as used in this clause, is defined in the Hazardous Material Identification and Material Safety Data clause of this contract.

(b) The Contractor shall label the item package (unit container) of any hazardous material to be delivered under this contract in accordance with the Hazard Communication Standard (29 CFR 1910.1200 et seq.). The Standard requires that the hazard warning label conform to the requirements of the standard unless the material is otherwise subject to the labeling requirements of one of the following statutes:

(1) Federal Insecticide, Fungicide and Rodenticide Act;

(2) Federal Food, Drug and Cosmetics Act;

(3) Consumer Product Safety Act;
(4) Federal Hazardous Substances Act; or
(5) Federal Alcohol Administration Act.

(c) The Offeror shall list which hazardous material listed in the Hazardous Material Identification and Material Safety Data clause of this contract will be labeled in accordance with one of the Acts in paragraphs (b)(1) through (5) of this clause instead of the Hazard Communication Standard. Any hazardous material not listed will be interpreted to mean that a label is required in accordance with the Hazard Communication Standard.

Material (if none, insert "none.")	Act
_____	_____
_____	_____

(d) The apparently successful Offeror agrees to submit, before award, a copy of the hazard warning label for all hazardous materials not listed in paragraph (c) of this clause. The Offeror shall submit the label with the Material Safety Data Sheet being furnished under the Hazardous Material Identification and Material Safety Data clause of this contract.

(e) The Contractor shall also comply with MIL-STD-129, Marking for Shipment and Storage (including revisions adopted during the term of this contract).

22. 52.225-7006 BUY AMERICAN ACT--TRADE AGREEMENTS--BALANCE OF PAYMENTS PROGRAM CERTIFICATE (JUN 1997) (APPLICABLE IF DFARS 252.225-7007 APPLIES - SEE SECTION 00700)

(a) Definitions.
"Caribbean Basin country end product," "designated country end product," "domestic end product," “NAFTA country end product,” “nondesignated country end product," "qualifying country end product," and "U.S. made end product" have the meanings given in the Trade Agreements and the Buy American Act and Balance of Payments Program clauses of this solicitation.

(b) Evaluation.
Offers will be evaluated in accordance with the policies and procedures of Part 225 of the Defense Federal Acquisition Regulation Supplement. Offers of foreign end products that are not U.S. made, qualifying country, designated country, Caribbean Basin country, or NAFTA country end products will not be considered for award, unless the Contracting Officer determines that there are no offers of such end products; or the offers of such end products are insufficient to fulfill the requirements; or a national interest exception to the Trade Agreements Act is granted.

(c) Certifications.

(1) The Offeror certifies that--

(i) Each end product, except the end products listed in paragraph (c)(2) of this provision, is a domestic end product (as defined in the Buy American Act and Balance of Payments Program clause of this solicitation); and

(ii) Components of unknown origin are considered to have been mined, produced, or manufactured outside the United States or a qualifying country.

(2) The Offeror must identify and certify all end products that are not domestic end products.

(i) The Offeror certifies that the following supplies qualify as "U.S. made end products" but do not meet the definition of "domestic end product":

_____
(Insert line item number)

(ii) The Offeror certifies that the following supplies are qualifying country end products:

_____
(Insert line item number)

_____
(Insert country of origin)

(iii) The Offeror certifies that the following supplies qualify as designated country end products:

_____
(Insert line item number)

_____
(Insert country of origin)

(iv) The Offeror certifies that the following supplies qualify as Caribbean Basin country end products:

_____
(Insert line item number)

_____
(Insert country of origin)

(v) The Offeror certifies that the following supplies qualify as NAFTA country end products:

_____
(Insert line item number)

_____
(Insert country of origin)

(vi) The Offeror certifies that the following supplies are other nondesignated country end products:

_____
(Insert line item number)

_____
(Insert country of origin)

23. DFARS 252.225-7035 BUY AMERICAN ACT--NORTH AMERICAN FREE TRADE AGREEMENT IMPLEMENTATION ACT--BALANCE OF PAYMENTS PROGRAM CERTIFICATE (MAY 1995) (APPLICABLE IF DFARS 252.225-7036 APPLIES - SEE SECTION 00700)

(a) Definitions.
"Domestic end product," "qualifying country end product," and "U.S. made end product" have the meanings given in the North American Free Trade Agreement Implementation Act or Buy American Act and Balance of Payments Program clauses of this solicitation.
(b) Evaluation.
Offers will be evaluated by giving preference to U.S. made end products, qualifying country end products, or NAFTA country end products over other end products.
(c) Certifications.
(1) The Offeror certifies that--

(i) Each end product, except the end products listed in paragraph (c)(2) of this provision, is a domestic end product (as defined in the Buy American Act and Balance of Payments Program clause of this solicitation); and

(ii) Components of unknown origin are considered to have been mined, produced, or manufactured outside the United States or a qualifying country.

(2) The Offeror must identify and certify all end products that are not domestic end products.

(i) The Offeror certifies that the following supplies qualify as "U.S. made end products" but do not meet the definition of "domestic end product":

_____
(Insert line item number)

(ii) The Offeror certifies that the following supplies are qualifying country (except Canada) end products:

_____	_____
(Insert line item number)	(Insert country of origin)

(iii) The Offeror certifies that the following supplies qualify as NAFTA country end products:

_____	_____
(Insert Line item number)	(Insert country of origin)

(iv) The Offeror certifies that the following supplies are other non-NAFTA country end products:

_____	_____
(Insert Line item number)	(Insert country of origin)

24. DFARS 252.247-7022 REPRESENTATION OF EXTENT OF TRANSPORTATION BY SEA (AUG 1992)

(a) The Offeror shall indicate by checking the appropriate blank in paragraph (b) of this provision whether transportation of supplies by sea is anticipated under the resultant contract. The term supplies is defined in the Transportation of Supplies by Sea clause of this solicitation.

(b) Representation.

The Offeror represents that it--

_____ Does anticipate that supplies will be transported by sea in the performance of any contract or subcontract resulting from this solicitation.

_____ Does not anticipate that supplies will be transported by sea in the performance of any contract or subcontract resulting from this solicitation.

(c) Any contract resulting from this solicitation will include the Transportation of Supplies by Sea clause. If the Offeror represents that it will not use ocean transportation, the resulting contract will also include the Defense FAR Supplement clause at 252.247-7024, Notification of Transportation of Supplies by Sea.

END OF SECTION

SECTION 00700

CONSTRUCTION CONTRACT CLAUSES

SECTION 00700

CONTRACT CLAUSES

1. FAR 52.252-2 CLAUSES INCORPORATED BY REFERENCE (JUN 1988)

This solicitation incorporates one or more clauses by reference, with the same force and effect as if they were given in full text. Upon request, the Contracting Officer will make their full text available.

CONTRACT CLAUSES BY REFERENCE:

2. DFARS 252.201-7000 CONTRACTING OFFICER'S REPRESENTATIVE (DEC 1991)

3. FAR 52.202-1 I DEFINITIONS (OCT 1995)--ALTERNATE I (APR 1984)

4. FAR 52.203-3 GRATUITIES (APR 1984)

5. FAR 52.203-5 COVENANT AGAINST CONTINGENT FEES (APR 1984)

6. FAR 52.203-6 RESTRICTIONS ON SUBCONTRACTOR SALES TO THE GOVERNMENT (JUL 1995)

7. FAR 52.203-7 ANTI-KICKBACK PROCEDURES (JUL 1995)

8. FAR 52.203-10 PRICE OR FEE ADJUSTMENT FOR ILLEGAL OR IMPROPER ACTIVITY (JAN 1997)

9. FAR 52.203-12 LIMITATION ON PAYMENTS TO INFLUENCE CERTAIN FEDERAL TRANSACTIONS (JAN 1990) (APPLICABLE OVER $100,000)

10. DFARS 252.203-7000 STATUTORY PROHIBITION ON COMPENSATION TO FORMER DEPARTMENT OF DEFENSE EMPLOYEES (NOV 1995) (APPLICABLE OVER $100,000)

11. DFARS 252.203-7001 SPECIAL PROHIBITION ON EMPLOYMENT (NOV 1995)

12. DFARS 252.203-7002 DISPLAY OF DOD HOTLINE POSTER (DEC 1991) (APPLICABLE OVER $5 MILLION)

13. FAR 52.204-2 II SECURITY REQUIREMENTS (APR 1984)--ALTERNATE II (APR 1984) (APPLICABLE IF CONTRACTOR HAS ACCESS TO CLASSIFIED INFORMATION)

14. DFARS 252.204-7000 DISCLOSURE OF INFORMATION (DEC 1991) (APPLICABLE IF CONTRACTOR HAS ACCESS TO INFORMATION INAPPROPRIATE FOR RELEASE)

15. DFARS 252.205-7000 PROVISION OF INFORMATION TO COOPERATIVE AGREEMENT HOLDERS (DEC 1991) (APPLICABLE OVER $500,000)

16. FAR 52.209-6 PROTECTING THE GOVERNMENT'S INTEREST WHEN SUBCONTRACTING WITH CONTRACTORS DEBARRED, SUSPENDED OR PROPOSED FOR DEBARMENT (JUL 1995)

17. DFARS 252.209-7000 ACQUISITION FROM SUBCONTRACTORS SUBJECT TO ON-SITE INSPECTION UNDER THE INTERMEDIATE-RANGE NUCLEAR FORCES (INF) TREATY (NOV 1995)

18.	DFARS 252.209-7004	REPORTING OF COMMERCIAL TRANSACTIONS WITH THE GOVERNMENT OF A TERRORIST COUNTRY (SEP 1994) (APPLICABLE OVER $5,000,000)
19.	FAR 52.211-15	DEFENSE PRIORITY AND ALLOCATION REQUIREMENTS (SEP 1990)
20.	FAR 52.211-18	VARIATION IN ESTIMATED QUANTITY (APR 1984) (APPLICABLE IF THERE ARE ESTIMATED-QUANTITY LINE ITEMS IN PRICING SCHEDULE)
21.	FAR 52.214-26	AUDIT AND RECORDS--SEALED BIDDING (OCT 1995) (APPLICABLE IF SEALED BIDDING - SEE BLOCK 2, SF1442 - AND OVER $500,000)
22.	FAR 52.214-27	PRICE REDUCTION FOR DEFECTIVE COST OR PRICING DATA-MODIFICATIONS-SEALED BIDDING (OCT 1995) (APPLICABLE IF SEALED BIDDING - SEE BLOCK 2, SF1442 - AND OVER $500,000)
23.	FAR 52.214-28	SUBCONTRACTOR COST OR PRICING DATA--MODIFICATIONS--SEALED BIDDING (OCT 1995) (APPLICABLE IF SEALED BIDDING - SEE BLOCK 2, SF1442 - AND OVER $500,000)
24.	FAR 52.214-29	ORDER OR PRECEDENCE--SEALED BIDDING (JAN 1986) (APPLICABLE IF SEALED BIDDING - SEE BLOCK 2, SF1442)
25.	FAR 52.215-2	AUDIT AND RECORDS--NEGOTIATION (AUG 1996) (APPLICABLE IF CONTRACTING BY NEGOTIATIONS)
26.	FAR 52.215-22	PRICE REDUCTION FOR DEFECTIVE COST OR PRICING DATA (OCT 1995) (APPLICABLE IF CONTRACTING BY NEGOTIATIONS AND CERTIFIED COST OR PRICING DATA IS REQUIRED)
27.	FAR 52.215-24	SUBCONTRACTOR COST OR PRICING DATA (OCT 1995) (APPLICABLE FAR 52.215-22 APPLIES)
28.	FAR 52.215-27	TERMINATION OF DEFINED BENEFIT PENSION PLANS (MAR 1996) (APPLICABLE IF CERTIFIED COST OR PRICING DATA IS REQUIRED AND FOR WHICH ANY PREAWARD OR POSTAWARD COST DETERMINATIONS WILL BE SUBJECT TO FAR SUBPART 31.2)
29.	FAR 52.215-31	WAIVER OF FACILITIES CAPITAL COST OF MONEY (SEP 1987) (APPLICABLE ANY TIME THE COST PRINCIPLES OF FAR 31.2 APPLY - MODIFICATIONS - AND ORIGINAL BID/OFFER DID NOT INCLUDE FACILITIES CAPITAL COST OF MONEY)
30.	FAR 52.215-33	ORDER OF PRECEDENCE (JAN 1986) (APPLICABLE IF NEGOTIATED - SEE BLOCK 2, SF 1442)

31.	FAR 52.215-39	REVERSION OR ADJUSTMENT OF PLANS FOR POSTRETIREMENT BENEFITS (PRB) OTHER THAN PENSIONS (MAR 1996) (APPLICABLE IF CERTIFIED COST OR PRICING DATA WILL BE REQUIRED OR FOR WHICH ANY PREAWARD OR POSTAWARD COST DETERMINATIONS WILL BE SUBJECT TO FAR SUBPART 31.2)
32.	FAR 52.215-40	NOTIFICATION OF OWNERSHIP CHANGES (FEB 1995) (APPLICABLE IF CERTIFIED COST OR PRICING DATA WILL BE REQUIRED OR FOR WHICH ANY PREAWARD OR POSTAWARD COST DETERMINATIONS WILL BE SUBJECT TO FAR SUBPART 31.2)
33.	DFARS 252.215-7000	PRICING ADJUSTMENTS (DEC 1991) (APPLICABLE IF FAR 52.215-24 APPLIES)
34.	DFARS 252.215-7002	COST ESTIMATING SYSTEM REQUIREMENTS (DEC 1991) (APPLICABLE IF NEGOTIATED - SEE BLOCK 2, SF 1442 - AND CONTRACT AWARD IS MADE ON THE BASIS OF CERTIFIED COST OR PRICING DATA)
35.	FAR 52.219-6	NOTICE OF TOTAL SMALL BUSINESS SET-ASIDE (JUL 1996) (APPLICABLE IF SET ASIDE FOR SMALL BUSINESS - SEE DD FORM 1707)
36.	FAR 52.219-8	UTILIZATION OF SMALL, SMALL DISADVANTAGED AND WOMEN-OWNED SMALL BUSINESS CONCERNS (OCT 1995)
37.	FAR 52.219-16	LIQUIDATED DAMAGES--SUBCONTRACTING PLAN (OCT 1995) (APPLICABLE IF FAR 52.219-9 IS APPLICABLE)
38.	DFARS 252.219-7003	SMALL, SMALL DISADVANTAGED AND WOMEN-OWNED SMALL BUSINESS SUBCONTRACTING PLAN (DOD CONTRACTS) (APR 1996) (APPLICABLE IF FAR 52.219-9 IS APPLICABLE)
39.	FAR 52.222-3	CONVICT LABOR (AUG 1996)
40.	FAR 52.222-4	CONTRACT WORK HOURS AND SAFETY STANDARDS ACT-OVERTIME COMPENSATION (JUL 1995)
41.	FAR 52.222-6	DAVIS-BACON ACT (FEB 1995)
42.	FAR 52.222-7	WITHHOLDING OF FUNDS (FEB 1988)
43.	FAR 52.222-8	PAYROLLS AND BASIC RECORDS (FEB 1988)
44.	FAR 52.222-9	APPRENTICES AND TRAINEES (FEB 1988)
45.	FAR 52.222-10	COMPLIANCE WITH COPELAND ACT REQUIREMENTS (FEB 1988)
46.	FAR 52.222-11	SUBCONTRACTS (LABOR STANDARDS) (FEB 1988)
47.	FAR 52.222-12	CONTRACT TERMINATION--DEBARMENT (FEB 1988)
48.	FAR 52.222-13	COMPLIANCE WITH DAVIS-BACON AND RELATED ACT REGULATIONS (FEB 1988)

49.	FAR 52.222-14	DISPUTES CONCERNING LABOR STANDARDS (FEB 1988)
50.	FAR 52.222-15	CERTIFICATION OF ELIGIBILITY (FEB 1988)
51.	FAR 52.222-26	EQUAL OPPORTUNITY (APR 1984)
52.	FAR 52.222-27	AFFIRMATIVE ACTION COMPLIANCE REQUIREMENTS FOR CONSTRUCTION (APR 1984)
53.	FAR 52.222-35	AFFIRMATIVE ACTION FOR SPECIAL DISABLED AND VIETNAM ERA VETERANS (APR 1984)
54.	FAR 52.222-36	AFFIRMATIVE ACTION FOR HANDICAPPED WORKERS (APR 1984)
55.	FAR 52.222-37	EMPLOYMENT REPORTS ON SPECIAL DISABLED VETERANS AND VETERANS OF THE VIETNAM ERA (JAN 1988)
56.	FAR 52.223-2	CLEAN AIR AND WATER (APR 1984) (APPLICABLE OVER $100,000 AND THE ANSWER TO SECTION 00600, 52.223-1, IS YES)
57.	FAR 52.223-6	DRUG-FREE WORKPLACE (JAN 1997)
58.	DFARS 252.223-7002	SAFETY PRECAUTIONS FOR AMMUNITION AND EXPLOSIVES (MAY 1994) (APPLICABLE IF EXPLOSIVES ARE USED)
59.	DFARS 252.223-7003	CHANGE IN PLACE OF PERFORMANCE--AMMUNITION AND EXPLOSIVES (DEC 1991) (APPLICABLE IF EXPLOSIVES ARE USED)
60.	FAR 52.225-11	RESTRICTIONS ON CERTAIN FOREIGN PURCHASES (OCT 1996)
61.	DFARS 252.225-7007	TRADE AGREEMENTS ACT (JAN 1996) (APPLICABLE IF CONTRACT AMOUNT IS $182,000 OR OVER EXCEPT WHEN SMALL OR SMALL, DISADVANTAGED BUSINESS PREFERENCE PROGRAM APPLIES TO THIS ACQUISITION)
62.	DFARS 252.225-7008	SUPPLIES TO BE ACCORDED DUTY-FREE ENTRY (DEC 1991)
63.	DFARS 252.225-7009	DUTY-FREE ENTRY--QUALIFYING COUNTRY END PRODUCTS AND SUPPLIES (DEC 1991)
64.	DFARS 252.225-7012	PREFERENCE FOR CERTAIN DOMESTIC COMMODITIES (NOV 1995)
65.	DFARS 252.225-7026	REPORTING OF CONTRACT PERFORMANCE OUTSIDE THE UNITED STATES (NOV 1995) (APPLICABLE OVER $500,000)
66.	DFARS 252.225-7036	NORTH AMERICAN FREE TRADE AGREEMENT IMPLEMENTATION ACT (JAN 1994) (APPLICABLE IF CONTRACT AMOUNT IS $6,500,000 OR OVER EXCEPT WHEN SMALL OR SMALL, DISADVANTAGED BUSINESS PREFERENCE PROGRAM APPLIES TO THIS ACQUISITION)

67.	DFARS 252.225-7037	DUTY-FREE ENTRY--NAFTA COUNTRY END PRODUCTS AND SUPPLIES (JAN 1994) (APPLICABLE IF DFARS 252.225-7036 APPLIES - SEE ABOVE)
68.	FAR 52.226-1	UTILIZATION OF INDIAN ORGANIZATIONS AND INDIAN-OWNED ECONOMIC ENTERPRISES (SEP 1996) (APPLICABLE IF FAR 52.219-9 IS APPLICABLE)
69.	FAR 52.227-1	AUTHORIZATION AND CONSENT (JUL 1995)
70.	FAR 52.227-4	PATENT INDEMNITY--CONSTRUCTION CONTRACTS (APR 1984)
71.	FAR 52.227-11	PATENT RIGHTS--RETENTION BY THE CONTRACTOR (SHORT FORM) (JUN 1989) (APPLICABLE IF NONSTANDARD WORK AND SMALL BUSINESS - SEE FAR 27.304-3)
72.	FAR 52.227-12	PATENT RIGHTS--RETENTION BY THE CONTRACTOR (LONG FORM) (JAN 1997) (APPLICABLE IF NONSTANDARD WORK AND LARGE BUSINESS - SEE FAR 27.304-3)
73.	DFARS 252.227-7000	NON-ESTOPPEL (OCT 1966)
74.	DFARS 252.227-7022	GOVERNMENT RIGHTS (UNLIMITED) (MAR 1979) (APPLICABLE TO CONSTRUCTION INVOLVING DESIGN SERVICES)
75.	DFARS 252.227-7023	DRAWINGS AND OTHER DATA TO BECOME PROPERTY OF GOVERNMENT (MAR 1979) (APPLICABLE TO CONSTRUCTION INVOLVING DESIGN SERVICES)
76.	DFARS 252.227-7024	NOTICE AND APPROVAL OF RESTRICTED DESIGNS (APR 1984) (APPLICABLE TO CONSTRUCTION INVOLVING DESIGN SERVICES)
77.	DFARS 252.227-7033	RIGHTS IN SHOP DRAWINGS (APR 1966)
78.	DFARS 252.227-7034	PATENTS--SUBCONTRACTS (APR 1984)
79.	DFARS 252.227-7039	PATENTS--REPORTING OF SUBJECT INVENTIONS (APR 1990) (APPLICABLE IF FAR 52.227-11 ABOVE IS APPLICABLE)
80.	FAR 52.228-1	BID GUARANTEE (SEP 1996)
81.	FAR 52.228-2	ADDITIONAL BOND SECURITY (APR 1984)
82.	FAR 52.228-11	PLEDGES OF ASSETS (FEB 1992)
83.	FAR 52.229-3	FEDERAL, STATE, AND LOCAL TAXES (JAN 1991)
84.	FAR 52.229-5	TAXES--CONTRACTS PERFORMED IN U.S. POSSESSIONS OR PUERTO RICO (APR 1984)
85.	DFARS 252.231-7000	SUPPLEMENTAL COST PRINCIPLES (DEC 1991)

86.	FAR 52.232-5	PAYMENTS UNDER FIXED-PRICE CONSTRUCTION CONTRACTS (MAY 1997)
87.	FAR 52.232-17	INTEREST (JUN 1996)
88.	FAR 52.232-23 I	ASSIGNMENT OF CLAIMS (JAN 1986)--ALTERNATE I (APR 1984)
89.	FAR 52.233-1	DISPUTES (OCT 1995)
90.	FAR 52.233-3	PROTEST AFTER AWARD (OCT 1995)
91.	DFARS 252.233-7000	CERTIFICATION OF CLAIMS AND REQUESTS FOR ADJUSTMENT OR RELIEF (MAY 1994) (APPLICABLE OVER $100,000)
92.	FAR 52.236-2	DIFFERING SITE CONDITIONS (APR 1984)
93.	FAR 52.236-3	SITE INVESTIGATION AND CONDITIONS AFFECTING THE WORK (APR 1984)
94.	FAR 52.236-5	MATERIALS AND WORKMANSHIP (APR 1984)
95.	FAR 52.236-6	SUPERINTENDENCE BY THE CONTRACTOR (APR 1984)
96.	FAR 52.236-7	PERMITS AND RESPONSIBILITIES (NOV 1991)
97.	FAR 52.236-8	OTHER CONTRACTS (APR 1984)
98.	FAR 52.236-9	PROTECTION OF EXISTING VEGETATION, STRUCTURES, EQUIPMENT, UTILITIES, AND IMPROVEMENTS (APR 1984)
99.	FAR 52.236-10	OPERATIONS AND STORAGE AREAS (APR 1984)
100.	FAR 52.236-11	USE AND POSSESSION PRIOR TO COMPLETION (APR 1984)
101.	FAR 52.236-12	CLEANING UP (APR 1984)
102.	FAR 52.236-13 I	ACCIDENT PREVENTION (NOV 1991)--ALTERNATE I (NOV 1991)
103.	FAR 52.236-15	SCHEDULES FOR CONSTRUCTION CONTRACTS (APR 1984) (APPLICABLE IF PERFORMANCE PERIOD EXCEEDS 60 DAYS)
104.	FAR 52.236-17	LAYOUT OF WORK (APR 1984)
105.	FAR 52.236-21 I	SPECIFICATIONS AND DRAWINGS FOR CONSTRUCTION (FEB 1997)--ALTERNATE I (APR 1984)
106.	DFARS 252.236-7000	MODIFICATION PROPOSALS--PRICE BREAKDOWN (DEC 1991)
107.	DFARS 252.236-7008	CONTRACT PRICES-BIDDING SCHEDULES (DEC 1991) (APPLICABLE IF THERE ARE UNIT PRICES)
108.	FAR 52.242-13	BANKRUPTCY (JUL 1995)
109.	FAR 52.242-14	SUSPENSION OF WORK (APR 1984)
110.	DFARS 252.242-7000	POSTAWARD CONFERENCE (DEC 1991)

111. FAR 52.243-4	CHANGES (AUG 1987)
112. DFARS 252.243-7001	PRICING OF CONTRACT MODIFICATIONS (DEC 1991)
113. FAR 52.244-1	SUBCONTRACTS (FIXED-PRICE CONTRACTS) (FEB 1995) (APPLICABLE OVER $500,000)
114. FAR 52.245-1	PROPERTY RECORDS (APR 1984) (APPLICABLE IF GOVERNMENT-FURNISHED PROPERTY (GFP) IS INVOLVED AND THE GOVERNMENT WILL MAINTAIN OFFICIAL PROPERTY RECORDS-IF THERE IS ANY GFP SECTION 00800 WILL CONTAIN A LIST OF THE GFP)
115. FAR 52.245-2	GOVERNMENT PROPERTY (FIXED-PRICE CONTRACTS (DEC 1989) (APPLICABLE IF GOVERNMENT-FURNISHED PROPERTY IS INVOLVED WORTH OVER $100,000-SEE SECTION 00800)
116. FAR 52.245-4	GOVERNMENT-FURNISHED PROPERTY (SHORT FORM) (APR 1984) (APPLICABLE IF GOVERNMENT-FURNISHED PROPERTY IS INVOLVED WORTH $100,000 OR LESS - SEE SECTION 00800)
117. DFARS 252.245-7001	REPORTS OF GOVERNMENT PROPERTY (MAY 1994) (APPLICABLE IF FAR 52.245-2 IS APPLICABLE)
118. FAR 52.246-21	WARRANTY OF CONSTRUCTION (MAR 1994) (NOT APPLICABLE TO CONTRACTS SOLELY FOR DREDGING, EXCAVATION, GRUBBING OR CLEARING; EFARS 46.710)
119. DFARS 252.247-7024	NOTIFICATION OF TRANSPORTATION OF SUPPLIES BY SEA (NOV 1995) (APPLICABLE IF THE ANSWER TO SECTION 00600, DFARS 52.247-7002, IS NEGATIVE)
120. FAR 52.248-3	VALUE ENGINEERING--CONSTRUCTION (MAR 1989) (APPLICABLE OVER $100,000)
121. FAR 52.249-1	TERMINATION FOR CONVENIENCE OF THE GOVERNMENT (FIXED-PRICE) (SHORT FORM) (APR 1984) (APPLICABLE $100,000 OR LESS)
122. FAR 52.249-2 I	TERMINATION FOR CONVENIENCE OF THE GOVERNMENT (FIXED-PRICE) (SEP 1996)--ALTERNATE I (SEP 1996) (APPLICABLE OVER $100,000)
123. FAR 52.249-10	DEFAULT (FIXED-PRICE CONSTRUCTION) (APR 1984)
124. DFARS 252.249-7001	NOTIFICATION OF SUBSTANTIAL IMPACT ON EMPLOYMENT (DEC 1991) (APPLICABLE IF CONTRACT IS OVER $5 MILLION WITH SUBCONTRACTS OVER $500,000)
125. FAR 52.253-1	COMPUTER-GENERATED FORMS (JAN 1991)

THE FOLLOWING CONTRACT CLAUSES ARE INCLUDED IN FULL TEXT

126. FAR 52.219-9	SMALL, SMALL DISADVANTAGED AND WOMEN-OWNED SMALL BUSINESS SUBCONTRACTING PLAN (AUG 1996) (APPLICABLE IF NEGOTIATED - SEE BLOCK 2, SF 1442 - AND OVER $1 MILLION; REQUIRED FROM LARGE BUSINESSES ONLY) (SEE ATTACHMENT SECTION)
127. FAR 52.219-9 I	SMALL, SMALL DISADVANTAGED AND WOMEN-OWNED SMALL BUSINESS SUBCONTRACTING PLAN (AUG 1996)--ALTERNATE I (OCT 1995) (APPLICABLE IF SEALED BIDDING - SEE BLOCK 2, SF1442 - OVER $1 MILLION; REQUIRED FROM LARGE BUSINESSES ONLY) (SEE ATTACHMENT SECTION)
128. FAR 52.223-7	NOTICE OF RADIOACTIVE MATERIALS (NOV 1991) (APPLICABLE IF RADIOACTIVE MATERIALS ARE INVOLVED)
129. FAR 52.225-5	BUY AMERICAN ACT--CONSTRUCTION MATERIALS (MAY 1997) (APPLICABLE IF FAR 52.225-15, DFARS 252.225-7007, OR DFARS 252.225-7036 ARE NOT APPLICABLE - SEE BELOW)
130. FAR 52.225-15	BUY AMERICAN ACT--CONSTRUCTION MATERIALS UNDER TRADE AGREEMENTS ACT AND NORTH AMERICAN FREE TRADE AGREEMENT (MAY 1997) (APPLICABLE IF CONTRACT AMOUNT IS $7,311,000 OR OVER EXCEPT WHEN SMALL OR SMALL, DISADVANTAGED BUSINESS PREFERENCE PROGRAM APPLIES TO THIS ACQUISITION)
131. FAR 52.225-15 I	BUY AMERICAN ACT--CONSTRUCTION MATERIALS UNDER TRADE AGREEMENTS ACT AND NORTH AMERICAN FREE TRADE AGREEMENT (MAY 1997)--ALTERNATE I (MAY 1997) (APPLICABLE IF CONTRACT AMOUNT IS FROM $6,500,000 TO $7,311,000 EXCEPT WHEN SMALL OR SMALL, DISADVANTAGED BUSINESS PREFERENCE PROGRAM APPLIES TO THIS ACQUISITION)
132. DFARS 252.225-7031	SECONDARY ARAB BOYCOTT OF ISRAEL (JUN 1992)
133. SAACONS 52.0236-4820	ORDER OF PRECEDENCE (JAN 1993)
134. FAR 52.243-7	NOTIFICATION OF CHANGES (APR 1984)
135. DFARS 252.247-7023	TRANSPORTATION OF SUPPLIES BY SEA (NOV 1995)
136. FAR 52.252-4	ALTERATIONS IN CONTRACT (APR 1984)
137. FAR 52.252-6	AUTHORIZED DEVIATIONS IN CLAUSES (APR 1984)
138. DFARS 252.223-7004	DRUG-FREE WORK FORCE (SEP 1988)
139. EFARS 52.249-5000	BASIS FOR SETTLEMENT OF PROPOSALS (DEC 1995)

126. FAR 52.219-9 SMALL, SMALL DISADVANTAGED AND WOMEN-OWNED SMALL BUSINESS SUBCONTRACTING PLAN (AUG 1996) (APPLICABLE IF NEGOTIATED - SEE BLOCK 2, SF 1442 - AND OVER $1 MILLION; REQUIRED FROM LARGE BUSINESSES ONLY; SEE ATTACHMENTS SECTION)

(a) This clause does not apply to small business concerns.

(b) "Commercial product," as used in this clause, means a product in regular production that is sold in substantial quantities to the general public and/or industry at established catalog or market prices. It also means a product which, in the opinion of the Contracting Officer, differs only insignificantly from the Contractor's commercial product.

"Subcontract," as used in this clause, means any agreement (other than one involving an employer-employee relationship) entered into by a Federal Government prime Contractor or subcontractor calling for supplies or services required for performance of the contract or subcontract.

(c) The offeror, upon request by the Contracting Officer, shall submit and negotiate a subcontracting plan, where applicable, which separately addresses subcontracting with small business concerns, with small disadvantaged business concerns and with women-owned small business concerns. If the offeror is submitting an individual contract plan, the plan must separately address subcontracting with small business concerns, small disadvantaged business concerns, and women-owned small business concerns with a separate part for the basic contract and separate parts for each option (if any). The plan shall be included in and made a part of the resultant contract. The subcontracting plan shall be negotiated within the time specified by the Contracting Officer. Failure to submit and negotiate the subcontracting plan shall make the offeror ineligible for award of a contract.

(d) The offeror's subcontracting plan shall include the following:

(1) Goals, expressed in terms of percentages of total planned subcontracting dollars, for the use of small business concerns, small disadvantaged business concerns and women-owned small business concerns as subcontractors. The offeror shall include all subcontracts that contribute to contract performance, and may include a proportionate share of products and services that are normally allocated as indirect costs.

(2) A statement of--

(i) Total dollars planned to be subcontracted;

(ii) Total dollars planned to be subcontracted to small business concerns; and

(iii) Total dollars planned to be subcontracted to small disadvantaged business concerns; and

(iv) Total dollars planned to be subcontracted to women-owned small business concerns.

(3) A description of the principal types of supplies and services to be subcontracted, and an identification of the types planned for subcontracting to (i) small business concerns, (ii) small disadvantaged business concerns and (iii) women-owned small business concerns.

(4) A description of the method used to develop the subcontracting goals in paragraph (d)(1) of this clause.

(5) A description of the method used to identify potential sources for solicitation purposes (e.g., existing company source lists, the Procurement Automated Source System (PASS) of the Small Business Administration, the National Minority Purchasing Council Vendor Information Service, the Research and Information Division of the Minority Business Development Agency in the Department of Commerce, or small, small disadvantaged and women-owned small business concerns trade associations). A firm may rely on the information contained in PASS as an accurate representation of a concern's size and ownership characteristics for purposes of maintaining a small business source list. A firm may rely on PASS as its small business source list. Use of the PASS as its source list does not relieve a firm of its responsibilities (i.e.,

outreach, assistance, counseling, publicizing subcontracting opportunities) in this clause.

(6) A statement as to whether or not the offeror included indirect costs in establishing subcontracting goals, and a description of the method used to determine the proportionate share of indirect costs to be incurred with (i) small business concerns, (ii) small disadvantaged business concerns, and (iii) women-owned small business concerns.

(7) The name of the individual employed by the offeror who will administer the offeror’s subcontracting program, and a description of the duties of the individual.

(8) A description of the efforts the offeror will make to assure that small, small disadvantaged and women-owned small business concerns have an equitable opportunity to compete for subcontracts.

(9) Assurances that the offeror will include the clause in this contract entitled "Utilization of Small, Small Disadvantaged and Women-Owned Small Business Concerns" in all subcontracts that offer further subcontracting opportunities, and that the offeror will require all subcontractors (except small business concerns) who receive subcontracts in excess of $500,000 ($1,000,000 for construction of any public facility) to adopt a plan similar to the plan agreed to by the offeror.

(10) Assurances that the offeror will (i) cooperate in any studies or surveys as may be required, (ii) submit periodic reports in order to allow the Government to determine the extent of compliance by the offeror with the subcontracting plan, (iii) submit Standard Form (SF) 294, Subcontracting Report for Individual Contracts, and/or SF 295, Summary Subcontract Report, in accordance with the instructions on the forms, and (iv) ensure that its subcontractors agree to submit Standard Forms 294 and 295.

(11) A recitation of the types of records the offeror will maintain to demonstrate procedures that have been adopted to comply with the requirements and goals in the plan, including establishing source lists; and a description of its efforts to locate small, small disadvantaged and women-owned small business concerns and award subcontracts to them. The records shall include at least the following (on a plant-wide or company-wide basis, unless otherwise indicated):

(i) Source lists (e.g., PASS), guides, and other data that identify small, small disadvantaged and women-owned small business concerns.

(ii) Organizations contacted in an attempt to locate sources that are small, small disadvantaged or women-owned small business concerns.

(iii) Records on each subcontract solicitation resulting in an award of more than $100,000, indicating (A) whether small business concerns were solicited and if not, why not, (B) whether small disadvantaged business concerns were solicited and if not, why not, (C) whether women-owned small business concerns were solicited and if not, why not, and (D) if applicable, the reason award was not made to a small business concern.

(iv) Records of any outreach efforts to contact (A) trade associations, (B) business development organizations, and (C) conferences and trade fairs to locate small, small disadvantaged and women-owned small business sources.

(v) Records of internal guidance and encouragement provided to buyers through (A) workshops, seminars, training, etc., and (B) monitoring performance to evaluate compliance with the programs’s requirements.

(vi) On a contract-by-contract basis, records to support award data submitted by the offeror to the Government, including the name, address, and business size of each subcontractor. Contractors having company or division-wide annual plans need not comply with this requirement.

(e) In order to effectively implement this plan to the extent consistent with efficient contract performance, the Contractor shall perform the following functions:

(1) Assist small, small disadvantaged and women-owned small business concerns by arranging solicitations, time for the preparation of bids, quantities, specifications, and delivery schedules so as to facilitate the participation by such concerns. Where the contractor’s lists of potential small, small disadvantaged and women-owned small business subcontractors are

excessively long, reasonable effort shall be made to give all such small business concerns an opportunity to compete over a period of time.

(2) Provide adequate and timely consideration of the potentialities of small, small disadvantaged and women-owned small business concerns in all "make-or-buy" decisions.

(3) Counsel and discuss subcontracting opportunities with representatives of small, small disadvantaged and women-owned small business firms.

(4) Provide notice to subcontractors concerning penalties and remedies for misrepresentations of business status as small, small disadvantaged or women-owned small business for the purpose of obtaining a subcontract that is to be included as part or all of a goal contained in the Contractor's subcontracting plan.

(f) A master subcontracting plan on a plant or division-wide basis which contains all the elements required by (d) of this clause, except goals, may be incorporated by reference as a part of the subcontracting plan required of the offeror by this clause; provided, (1) the master plan has been approved, (2) the offeror ensures that the plan is updated as necessary and provides copies of the approved master plan, including evidence of its approval, to the Contracting Officer, and (3) goals and any deviations from the master plan deemed necessary by the Contracting Officer to satisfy the requirements of this contract are set forth in the individual subcontracting plan.

(g)(1) If a commercial product is offered, the subcontracting plan required by this clause may relate to the offeror's production generally, for both commercial and noncommercial products, rather than solely to the Government contract. In these cases, the offeror shall, with the concurrence of the Contracting Officer, submit one company-wide or division-wide annual plan.

(2) The annual plan shall be reviewed for approval by the agency awarding the offeror its first prime contract requiring a subcontracting plan during the fiscal year, or by an agency satisfactory to the Contracting Officer.

(3) The approved plan shall remain in effect during the offeror's fiscal year for all of the offeror's commercial products.

(h) Prior compliance of the offeror with other such subcontracting plans under previous contracts will be considered by the Contracting Officer in determining the responsibility of the offeror for award of the contract.

(i) The failure of the Contractor or subcontractor to comply in good faith with (1) the clause of this contract entitled "Utilization of Small, Small Disadvantaged and Women-Owned Small Business Concerns," or (2) an approved plan required by this clause, shall be a material breach of the contract.

127. FAR 52.219-9 I — SMALL, SMALL DISADVANTAGED AND WOMEN-OWNED SMALL BUSINESS SUBCONTRACTING PLAN (AUG 1996)--ALTERNATE I (OCT 1995) (APPLICABLE IF SEALED BIDDING - SEE BLOCK 2, SF 1442 - AND OVER $1 MILLION; REQUIRED FROM LARGE BUSINESSES ONLY; SEE ATTACHMENTS SECTION)

(a) This clause does not apply to small business concerns.

(b) "Commercial product," as used in this clause, means a product in regular production that is sold in substantial quantities to the general public and/or industry at established catalog or market prices. It also means a product which, in the opinion of the Contracting Officer, differs only insignificantly from the Contractor's commercial product.

"Subcontract," as used in this clause, means any agreement (other than one involving an employer-employee relationship) entered into by a Federal Government prime Contractor or subcontractor calling for supplies or services required for performance of the contract or subcontract.

(c) The apparent low bidder, upon request by the Contracting Officer, shall submit a subcontracting plan, where applicable, which separately addresses subcontracting with small business concerns, with small disadvantaged business concerns and with women-owned small business concerns. If the bidder is submitting an individual contract plan, the plan must

separately address subcontracting with small business concerns, small disadvantaged business concerns, and women-owned small business concerns with a separate part for the basic contract and separate parts for each option (if any). The plan shall be included in and made a part of the resultant contract. The subcontracting plan shall be submitted within the time specified by the Contracting Officer. Failure to submit the subcontracting plan shall make the bidder ineligible for the award of a contract.

(d) The offeror's subcontracting plan shall include the following:

(1) Goals, expressed in terms of percentages of total planned subcontracting dollars, for the use of small business concerns, small disadvantaged business concerns and women-owned small business concerns as subcontractors. The offeror shall include all subcontracts that contribute to contract performance, and may include a proportionate share of products and services that are normally allocated as indirect costs.

(2) A statement of--

(i) Total dollars planned to be subcontracted;

(ii) Total dollars planned to be subcontracted to small business concerns; and

(iii) Total dollars planned to be subcontracted to small disadvantaged business concerns; and

(iv) Total dollars planned to be subcontracted to women-owned small business concerns.

(3) A description of the principal types of supplies and services to be subcontracted, and an identification of the types planned for subcontracting to (i) small business concerns, (ii) small disadvantaged business concerns and (iii) women-owned small business concerns.

(4) A description of the method used to develop the subcontracting goals in paragraph (d)(1) of this clause.

(5) A description of the method used to identify potential sources for solicitation purposes (e.g., existing company source lists, the Procurement Automated Source System (PASS) of the Small Business Administration, the National Minority Purchasing Council Vendor Information Service, the Research and Information Division of the Minority Business Development Agency in the Department of Commerce, or small, small disadvantaged and women-owned small business concerns trade associations). A firm may rely on the information contained in PASS as an accurate representation of a concern's size and ownership characteristics for purposes of maintaining a small business source list. A firm may rely on PASS as its small business source list. Use of the PASS as its source list does not relieve a firm of its responsibilities (i.e., outreach, assistance, counseling, publicizing subcontracting opportunities) in this clause.

(6) A statement as to whether or not the offeror included indirect costs in establishing subcontracting goals, and a description of the method used to determine the proportionate share of indirect costs to be incurred with (i) small business concerns, (ii) small disadvantaged business concerns, and (iii) women-owned small business concerns.

(7) The name of the individual employed by the offeror who will administer the offeror's subcontracting program, and a description of the duties of the individual.

(8) A description of the efforts the offeror will make to assure that small, small disadvantaged and women-owned small business concerns have an equitable opportunity to compete for subcontracts.

(9) Assurances that the offeror will include the clause in this contract entitled "Utilization of Small, Small Disadvantaged and Women-Owned Small Business Concerns" in all subcontracts that offer further subcontracting opportunities, and that the offeror will require all subcontractors (except small business concerns) who receive subcontracts in excess of $500,000 ($1,000,000 for construction of any public facility) to adopt a plan similar to the plan agreed to by the offeror.

(10) Assurances that the offeror will (i) cooperate in any studies or surveys as may be required, (ii) submit periodic reports in order to allow the Government to determine the extent of compliance by the offeror with the subcontracting plan, (iii) submit Standard Form (SF) 294, Subcontracting

Report for Individual Contracts, and/or SF 295, Summary Subcontract Report, in accordance with the instructions on the forms, and (iv) ensure that its subcontractors agree to submit Standard Forms 294 and 295.

(11) A recitation of the types of records the offeror will maintain to demonstrate procedures that have been adopted to comply with the requirements and goals in the plan, including establishing source lists; and a description of its efforts to locate small, small disadvantaged and women-owned small business concerns and award subcontracts to them. The records shall include at least the following (on a plant-wide or company-wide basis, unless otherwise indicated):

(i) Source lists (e.g., PASS), guides, and other data that identify small, small disadvantaged and women-owned small business concerns.

(ii) Organizations contacted in an attempt to locate sources that are small, small disadvantaged or women-owned small business concerns.

(iii) Records on each subcontract solicitation resulting in an award of more than $100,000, indicating (A) whether small business concerns were solicited and if not, why not, (B) whether small disadvantaged business concerns were solicited and if not, why not, (C) whether women-owned small business concerns were solicited and if not, why not, and (D) if applicable, the reason award was not made to a small business concern.

(iv) Records of any outreach efforts to contact (A) trade associations, (B) business development organizations, and (C) conferences and trade fairs to locate small, small disadvantaged and women-owned small business sources.

(v) Records of internal guidance and encouragement provided to buyers through (A) workshops, seminars, training, etc., and (B) monitoring performance to evaluate compliance with the programs’s requirements.

(vi) On a contract-by-contract basis, records to support award data submitted by the offeror to the Government, including the name, address, and business size of each subcontractor. Contractors having company or division-wide annual plans need not comply with this requirement.

(e) In order to effectively implement this plan to the extent consistent with efficient contract performance, the Contractor shall perform the following functions:

(1) Assist small, small disadvantaged and women-owned small business concerns by arranging solicitations, time for the preparation of bids, quantities, specifications, and delivery schedules so as to facilitate the participation by such concerns. Where the contractor’s lists of potential small, small disadvantaged and women-owned small business subcontractors are excessively long, reasonable effort shall be made to give all such small business concerns an opportunity to compete over a period of time.

(2) Provide adequate and timely consideration of the potentialities of small, small disadvantaged and women-owned small business concerns in all "make-or-buy" decisions.

(3) Counsel and discuss subcontracting opportunities with representatives of small, small disadvantaged and women-owned small business firms.

(4) Provide notice to subcontractors concerning penalties and remedies for misrepresentations of business status as small, small disadvantaged or women-owned small business for the purpose of obtaining a subcontract that is to be included as part or all of a goal contained in the Contractor’s subcontracting plan.

(f) A master subcontracting plan on a plant or division-wide basis which contains all the elements required by (d) of this clause, except goals, may be incorporated by reference as a part of the subcontracting plan required of the offeror by this clause; provided, (1) the master plan has been approved, (2) the offeror ensures that the plan is updated as necessary and provides copies of the approved master plan, including evidence of its approval, to the Contracting Officer, and (3) goals and any deviations from the master plan deemed necessary by the Contracting Officer to satisfy the requirements of this contract are set forth in the individual subcontracting plan.

(g)(1) If a commercial product is offered, the subcontracting plan required by this clause may relate to the offeror’s production generally, for both commercial and noncommercial products, rather than solely to the Government contract. In these cases, the offeror shall, with the concurrence

of the Contracting Officer, submit one company-wide or division-wide annual plan.

(2) The annual plan shall be reviewed for approval by the agency awarding the offeror its first prime contract requiring a subcontracting plan during the fiscal year, or by an agency satisfactory to the Contracting Officer.

(3) The approved plan shall remain in effect during the offeror's fiscal year for all of the offeror's commercial products.

(h) Prior compliance of the offeror with other such subcontracting plans under previous contracts will be considered by the Contracting Officer in determining the responsibility of the offeror for award of the contract.

(i) The failure of the Contractor or subcontractor to comply in good faith with (1) the clause of this contract entitled "Utilization of Small, Small Disadvantaged and Women-Owned Small Business Concerns," or (2) an approved plan required by this clause, shall be a material breach of the contract.

128. FAR 52.223-7 NOTICE OF RADIOACTIVE MATERIALS (NOV 1991) (APPLICABLE IF RADIOACTIVE MATERIALS ARE INVOLVED - SEE SPECIFICATIONS)

(a) The Contractor shall notify the Contracting Officer or designee, in writing, 14 days prior to the delivery of, or prior to completion of any servicing required by this contract of, items containing either (1) radioactive material requiring specific licensing under the regulations issued pursuant to the Atomic Energy Act of 1954, as amended, as set forth in Title 10 of the Code of Federal Regulations, in effect on the date of this contract, or (2) other radioactive material not requiring specific licensing in which the specific activity is greater than 0.002 microcuries per gram or the activity per item equals or exceeds 0.01 microcuries. Such notice shall specify the part or parts of the items which contain radioactive materials, a description of the materials, the name and activity of the isotope, the manufacturer of the materials, and any other information known to the Contractor which will put users of the items on notice as to the hazards involved (OMB No. 9000-0107).

(b) If there has been no change affecting the quantity of activity, or the characteristics and composition of the radioactive material from deliveries under this contract or prior contracts, the Contractor may request that the Contracting Officer or designee waive the notice requirement in paragraph (a) of this clause. Any such request shall--

(1) Be submitted in writing;

(2) Contain a certification that the quantity of activity, characteristics, and composition of the radioactive material have not changed; and

(3) Cite the contract number on which the prior notification was submitted and the contracting office to which it was submitted.

(c) All items, parts, or subassemblies which contain radioactive materials in which the specific activity is greater than 0.002 microcuries per gram or activity per item equals or exceeds 0.01 microcuries, and all containers in which such items, parts or subassemblies are delivered to the Government shall be clearly marked and labeled as required by the latest revision of MIL-STD 129 in effect on the date of the contract.

(d) This clause, including this paragraph (d), shall be inserted in all subcontracts for radioactive materials meeting the criteria in paragraph (a) of this clause.

129. FAR 52.225-5 BUY AMERICAN ACT -- CONSTRUCTION MATERIALS (MAY 1997)

(a) Definitions. As used in this clause --

"Components"means those articles, materials, and supplies incorporated directly into construction materials.

"Construction material" means an article, material, or supply brought to the construction site for incorporation into the building or work.

Construction material also includes an item brought to the site pre-assembled from articles, materials or supplies. However, emergency life safety systems, such as emergency lighting, fire alarm, and audio evacuation systems, which are discrete systems incorporated into a public building or work and which are produced as a complete system, shall be evaluated as a single and distinct construction material regardless of when or how the individual parts or components of such systems are delivered to the construction site.

"Domestic construction material" means (1) an unmanufactured construction material mined or produced in the United States, or (2) a construction material manufactured in the United States, if the cost of its components mined, produced, or manufactured in the United States exceeds 50 percent of the cost of all its components. Components of foreign origin of the same class or kind as the construction materials determined to be unavailable pursuant to subparagraph 25.202(a)(2) of the Federal Acquisition Regulation (FAR) shall be treated as domestic.

(b)(1) The Buy American Act (41 U.S.C. 10a-10d) requires that only domestic construction material be used in performing this contract, except as provided in paragraphs (b)(2) and (b)(3) of this clause.

(2) This requirement does not apply to the excepted construction materials or components listed by the Government as follows:

_____

(List applicable accepted materials or indicate "none")

(3) Other foreign construction material may be added to the list in paragraph (b)(2) of this clause if the Government determines that --

(i) The cost would be unreasonable (the cost of a particular domestic construction material shall be determined to be unreasonable when the cost of such material exceeds the cost of foreign material by more than 6 percent, unless the agency head determines a higher percentage to be appropriate);

(ii) The application of the restriction of the Buy American Act to a particular construction material would be impracticable or inconsistent with the public interest; or

(iii) The construction material is not mined, produced, or manufactured in the United States in sufficient and reasonably available commercial quantities of a satisfactory quality.

(4) The Contractor agrees that only domestic construction material will be used by the Contractor, subcontractors, material men, and suppliers in the performance of this contract, except for foreign construction materials, if any listed in paragraph (b)(2) of this clause.

(c) Request for determination. (1) Contractors requesting to use foreign construction material under paragraph (b)(3) of this clause shall provide adequate information for Government evaluation of the request for a determination regarding the inapplicability of the Buy American Act. Each submission shall include a description of the foreign and domestic construction materials, including unit of measure, quantity, price, time of delivery or availability, location of the construction project, name and address of the proposed contractor, and a detailed justification of the reason for use of foreign materials cited in accordance with paragraph (b)(3) of this clause. A submission based on unreasonable cost shall include a reasonable survey of the marked and a completed price comparison table in the format in paragraph (d) of this clause. The price of construction material shall include all delivery costs to the construction site and any applicable duty (whether or not a duty-free certificate may be issued).

(2) If the Government determines after contract award that an exception to the Buy American Act applies, the contract shall be modified to allow use of the foreign construction material, and adequate consideration shall be negotiated. However, when the basis for the exception is the unreasonable price of a domestic construction material, adequate consideration shall not be less than the differential established in paragraph (b)(3)(i) of this clause.

(3) If the Government does not determine that an exception to the Buy American Act applies, the use of that particular foreign construction material will be a failure to comply with the Act.

(d) For evaluation of requests under paragraph (c) of this clause based on unreasonable cost, the following information and any applicable supporting data based on the survey of suppliers shall be included in the request:

FOREIGN AND DOMESTIC CONSTRUCTION
MATERIALS PRICE COMPARISON

CONSTRUCTION MATERIAL DESCRIPTION	UNIT OF MEASURE	QUANTITY	PRICE (DOLLARS)*
Item 1:			
Foreign construction material	_____	_____	_____
Domestic construction material	_____	_____	_____
Item 2:			
Foreign construction material	_____	_____	_____
Domestic construction material	_____	_____	_____

List name, address telephone number, and contact for suppliers surveyed.
Attach copy of response; if oral, attach summary.
Include other applicable supporting information.
*Include all delivery costs to the construction site and any applicable duty (whether or not a duty-free entry certificate is issued).

130. FAR 52.225-15 BUY AMERICAN ACT -- CONSTRUCTION MATERIALS UNDER TRADE AGREEMENTS ACT AND NORTH AMERICAN FREE TRADE AGREEMENT (MAY 1997)

(a) Definitions. As used in this clause--

"Components" means those articles, materials, and supplies incorporated directly into construction materials.

"Construction material" means an article, material, or supply brought to the construction site for incorporation into the building or work. Construction material also includes an item brought to the site pre-assembled from articles, materials, or supplies. However, emergency life safety systems, such as emergency lighting, fire alarm, and audio evacuation systems, which are discrete systems incorporated into a public building or work and which are produced as a complete system, shall be evaluated as a single and distinct construction material regardless of when or how the individual parts or components of such systems are delivered to the construction site.

"Designated country construction material" means a construction material that-- (1) Is wholly the growth, product, or manufacture of a designated country (as defined at FAR 25.401); or (2) In the case of a construction material which consists in whole or in part of materials from another country or instrumentality, has been substantially transformed in a designated country into a new and different construction material distinct from the materials from which it was transformed.

"Domestic construction material" means (1) an unmanufactured construction material mined or produced in the United States, or (2) a construction material manufactured in the United States, if the cost of its components mined, produced, or manufactured in the United States exceeds 50 percent of

the cost of all its components. Components of foreign origin of the same class or kind as the construction materials determined to be unavailable pursuant to subparagraph 25.202(a)(2) of the Federal Acquisition Regulation (FAR) shall be treated as domestic.

"North American Free Trade Agreement (NAFTA) country" means Canada or Mexico.

"NAFTA country construction material" means a construction material that-- (1) Is wholly the growth, product, or manufacture of a NAFTA country; or (2) In the case of a construction material which consists in whole or in part of materials from another country or instrumentality, has been substantially transformed in a NAFTA country into a new and different construction material distinct from the materials from which it was transformed.

(b)(1) The Buy American Act (41 U.S.C. 10a - 10d) requires that only domestic construction material be used in performing this contract, except as provided in paragraphs (b)(2), (b)(3), and (b)(4) of this clause.

(2) The Trade Agreements Act and the North American Free Trade Agreement (NAFTA) provide that designated country and NAFTA country construction materials are exempted from application of the Buy American Act.

(3) The requirement in paragraph (b)(1) of this clause does not apply to the excepted construction material or components listed by the Government as follows:

_____

List applicable excepted materials or indicate "None"

(4) Other foreign construction material may be added to the list in paragraph (b)(3) of this clause if the Government determines that--

(i) The cost would be unreasonable (the cost of a particular domestic construction material shall be determined to be unreasonable when the cost of such material exceeds the cost of foreign material by more than 6 percent, unless the agency head determines a higher percentage to be appropriate);

(ii) The application of the restriction of the Buy American Act to a particular construction material would be impracticable or inconsistent with the public interest; or

(iii) The construction material is not mined, produced, or manufactured in the United States in sufficient and reasonably available commercial quantities of a satisfactory quality.

(5) The Contractor agrees that only domestic construction materials, NAFTA country construction materials, or designated country construction materials will be used by the Contractor, subcontractors, material men, and suppliers in the performance of this contract, except for foreign construction materials, if any, listed in paragraph (b)(3) of this clause.

(c) Request for determination. (1) Contractors requesting to use foreign construction material under paragraph (b)(4) of this clause shall provide adequate information for Government evaluation of the request for a determination regarding the inapplicability of the Buy American Act. Each submission shall include a description of the foreign and domestic construction materials, including unit of measure, quantity, price, time of delivery or availability, location of the construction project, name and address of the proposed contractor, and a detailed justification of the reason for use of foreign materials cited in accordance with paragraph (b)(4) of this clause. A submission based on unreasonable cost shall include a reasonable survey of the market and a completed price comparison table in the format in paragraph (d) of this clause. The price of construction material shall include all delivery costs to the construction site and any applicable duty (whether or not a duty-free certificate may be issued).

(2) If the Government determines after contract award that an exception to the Buy American Act applies, the contract shall be modified to allow use of the foreign construction material, and adequate consideration shall be

negotiated. However, when the basis for the exception is the unreasonable price of a domestic construction material, adequate consideration shall not be less than the differential established in paragraph (b)(4)(i) of this clause.

(3) If the Government does not determine that an exception to the Buy American Act applies, the use of that particular foreign construction material will be a failure to comply with the Act.

(d) For evaluation of requests under paragraph (c) of this clause based on unreasonable cost, the following information and any applicable supporting data based on the survey of suppliers shall be included in the request:

FOREIGN AND DOMESTIC CONSTRUCTION
MATERIALS PRICE COMPARISON

CONSTRUCTION MATERIAL DESCRIPTION	UNIT OF MEASURE	QUANTITY	PRICE (DOLLARS)*
Item 1:			
Foreign construction material	_____	_____	_____
Domestic construction material	_____	_____	_____
Item 2:			
Foreign construction material	_____	_____	_____
Domestic construction material	_____	_____	_____

List name, address telephone number, and contact for suppliers surveyed.
Attach copy of response; if oral, attach summary.
Include other applicable supporting information.
*Include all delivery costs to the construction site and any applicable duty (whether or not a duty-free entry certificate is issued).

131. FAR 52.225-15 I BUY AMERICAN ACT -- CONSTRUCTION MATERIALS UNDER TRADE AGREEMENTS ACT AND NORTH AMERICAN FREE TRADE AGREEMENT (MAY 1997)-- ALTERNATE I (MAY 1997)

(a) Definitions. As used in this clause--

"Components" means those articles, materials, and supplies incorporated directly into construction materials.

"Construction material" means an article, material, or supply brought to the construction site for incorporation into the building or work. Construction material also includes an item brought to the site pre-assembled from articles, materials, or supplies. However, emergency life safety systems, such as emergency lighting, fire alarm, and audio evacuation systems, which are discrete systems incorporated into a public building or work and which are produced as a complete system, shall be evaluated as a single and distinct construction material regardless of when or how the individual parts or components of such systems are delivered to the construction site.

"Designated country construction material" means a construction material that-- (1) Is wholly the growth, product, or manufacture of a designated

country (as defined at FAR 25.401); or (2) In the case of a construction material which consists in whole or in part of materials from another country or instrumentality, has been substantially transformed in a designated country into a new and different construction material distinct from the materials from which it was transformed.

"Domestic construction material" means (1) an unmanufactured construction material mined or produced in the United States, or (2) a construction material manufactured in the United States, if the cost of its components mined, produced, or manufactured in the United States exceeds 50 percent of the cost of all its components. Components of foreign origin of the same class or kind as the construction materials determined to be unavailable pursuant to subparagraph 25.202(a)(2) of the Federal Acquisition Regulation (FAR) shall be treated as domestic.

"North American Free Trade Agreement (NAFTA) country" means Canada or Mexico.

"NAFTA country construction material" means a construction material that-- (1) Is wholly the growth, product, or manufacture of a NAFTA country; or (2) In the case of a construction material which consists in whole or in part of materials from another country or instrumentality, has been substantially transformed in a NAFTA country into a new and different construction material distinct from the materials from which it was transformed.

(b)(1) The Buy American Act (41 U.S.C. 10a - 10d) requires that only domestic construction material be used in performing this contract, except as provided in paragraphs (b)(2), (b)(3), and (b)(4) of this clause.

(2) The North American Free Trade Agreement (NAFTA) provides that NAFTA construction materials are exempted from application of the Buy American Act.

(3) The requirement in paragraph (b)(1) of this clause does not apply to the excepted construction material or components listed by the Government as follows:

_____

List applicable excepted materials or indicate "None"

(4) Other foreign construction material may be added to the list in paragraph (b)(3) of this clause if the Government determines that--

(i) The cost would be unreasonable (the cost of a particular domestic construction material shall be determined to be unreasonable when the cost of such material exceeds the cost of foreign material by more than 6 percent, unless the agency head determines a higher percentage to be appropriate);

(ii) The application of the restriction of the Buy American Act to a particular construction material would be impracticable or inconsistent with the public interest; or

(iii) The construction material is not mined, produced, or manufactured in the United States in sufficient and reasonably available commercial quantities of a satisfactory quality.

(5) The Contractor agrees that only domestic construction materials, or NAFTA country construction materials will be used by the Contractor, subcontractors, material men, and suppliers in the performance of this contract, except for foreign construction materials, if any, listed in paragraph (b)(3) of this clause.

(c) Request for determination. (1) Contractors requesting to use foreign construction material under paragraph (b)(4) of this clause shall provide adequate information for Government evaluation of the request for a determination regarding the inapplicability of the Buy American Act. Each submission shall include a description of the foreign and domestic construction materials, including unit of measure, quantity, price, time of delivery or availability, location of the construction project, name and address of the proposed contractor, and a detailed justification of the reason for use of foreign materials cited in accordance with paragraph (b)(4) of this

clause. A submission based on unreasonable cost shall include a reasonable survey of the market and a completed price comparison table in the format in paragraph (d) of this clause. The price of construction material shall include all delivery costs to the construction site and any applicable duty (whether or not a duty-free certificate may be issued).

(2) If the Government determines after contract award that an exception to the Buy American Act applies, the contract shall be modified to allow use of the foreign construction material, and adequate consideration shall be negotiated. However, when the basis for the exception is the unreasonable price of a domestic construction material, adequate consideration shall not be less than the differential established in paragraph (b)(4)(i) of this clause.

(3) If the Government does not determine that an exception to the Buy American Act applies, the use of that particular foreign construction material will be a failure to comply with the Act.

(d) For evaluation of requests under paragraph (c) of this clause based on unreasonable cost, the following information and any applicable supporting data based on the survey of suppliers shall be included in the request:

FOREIGN AND DOMESTIC CONSTRUCTION
MATERIALS PRICE COMPARISON

CONSTRUCTION MATERIAL DESCRIPTION	UNIT OF MEASURE	QUANTITY	PRICE (DOLLARS)*
Item 1:			
Foreign construction material	_____	_____	_____
Domestic construction material	_____	_____	_____
Item 2:			
Foreign construction material	_____	_____	_____
Domestic construction material	_____	_____	_____

List name, address telephone number, and contact for suppliers surveyed.
Attach copy of response; if oral, attach summary.
Include other applicable supporting information.
*Include all delivery costs to the construction site and any applicable duty (whether or not a duty-free entry certificate is issued).

132. DFARS 252.225-7031 SECONDARY ARAB BOYCOTT OF ISRAEL (JUN 1992)

(A) Definitions.

As used in this clause--

"Foreign Person" means any person other than a United States person as defined in Section 16(2) of the Export Administration Act of 1979 (50 U.S.C. APP. SEC 2415).

"United States Person" is defined in Section 16(2) of the Export Administration Act of 1979 and means any United States resident or national (other than an individual resident outside the United States and employed by other than a United States person), any domestic concern (including any permanent domestic establishment of any foreign concern), and any foreign subsidiary or affiliate (including any permanent foreign establishment) of any

domestic concern which is controlled in fact by such domestic concern, as determined under regulations of the President.

(B) Certification.

By submitting this offer, the offeror, if a foreign person, company or entity, certifies that it--

(1) Does not comply with the secondary Arab boycott of Israel; and

(2) Is not taking or knowingly agreeing to take any action, with respect to the secondary boycott of Israel by Arab countries, which 50 U.S.C. APP. SEC 2407(A) prohibits a United States person from taking.

133. SAACONS 52.236-4820 ORDER OF PRECEDENCE (JAN 1993)

In regard to FAR contract clause 52.214-29, Order of Precedence-Sealed Bidding, the contract drawings are considered to be an attachment to the specifications and are not "other documents, exhibits, and attachments". For the order of precedence between the specifications and drawings, see FAR contract clause 52.236-21, Alternate I.

134. FAR 52.243-7 NOTIFICATION OF CHANGES (APR 1984)

(a) Definitions. "Contracting Officer," as used in this clause, does not include any representative of the Contracting Officer. "Specifically authorized representative (SAR)," as used in this clause, means any person the Contracting Officer has so designated by written notice (a copy of which shall be provided to the Contractor) which shall refer to this subparagraph and shall be issued to the designated representative before the SAR exercises such authority.

(b) Notice. The primary purpose of this clause is to obtain prompt reporting of Government conduct that the Contractor considers to constitute a change to this contract. Except for changes identified as such in writing and signed by the Contracting Officer, the Contractor shall notify the Administrative Contracting Officer in writing promptly, within 14 calendar days from the date that the Contractor identifies any Government conduct (including actions, inactions, and written or oral communications) that the Contractor regards as a change to the contract terms and conditions. On the basis of the most accurate information available to the Contractor, the notice shall state--

(1) The date, nature, and circumstances of the conduct regarded as a change;

(2) The name, function, and activity of each Government individual and Contractor official or employee involved in or knowledgeable about such conduct;

(3) The identification of any documents and the substance of any oral communication involved in such conduct;

(4) In the instance of alleged acceleration of scheduled performance or delivery, the basis upon which it arose;

(5) The particular elements of contract performance for which the Contractor may seek an equitable adjustment under this clause, including--

(i) What contract line items have been or may be affected by the alleged change;

(ii) What labor or materials or both have been or may be added, deleted, or wasted by the alleged change;

(iii) To the extent practicable, what delay and disruption in the manner and sequence of performance and effect on continued performance have been or may be caused by the alleged change;

(iv) What adjustments to contract price, delivery schedule, and other provisions affected by the alleged change are estimated; and

(6) The Contractor’s estimate of the time by which the Government must respond to the Contractor’s notice to minimize cost, delay or disruption of performance.

(c) Continued performance. Following submission of the notice required by (b) above, the Contractor shall diligently continue performance of this contract to the maximum extent possible in accordance with its terms and

conditions as construed by the Contractor, unless the notice reports a direction of the Contracting Officer or a communication from a SAR of the Contracting Officer, in either of which events the Contractor shall continue performance; provided, however, that if the Contractor regards the direction or communication as a change as described in (b) above, notice shall be given in the manner provided. All directions, communications, interpretations, orders and similar actions of the SAR shall be reduced to writing promptly and copies furnished to the Contractor and to the Contracting Officer. The Contracting Officer shall promptly countermand any action which exceeds the authority of the SAR.

(d) Government response. The Contracting Officer shall promptly, within 14 calendar days after receipt of notice, respond to the notice in writing. In responding, the Contracting Officer shall either--

(1) Confirm that the conduct of which the Contractor gave notice constitutes a change and when necessary direct the mode of further performance;

(2) Countermand any communication regarded as a change;

(3) Deny that the conduct of which the Contractor gave notice constitutes a change and when necessary direct the mode of further performance; or

(4) In the event the Contractor’s notice information is inadequate to make a decision under (1), (2), or (3) above, advise the Contractor what additional information is required, and establish the date by which it should be furnished and the date thereafter by which the Government will respond.

(e) Equitable adjustments.

(1) If the Contracting Officer confirms that Government conduct effected a change as alleged by the Contractor, and the conduct causes an increase or decrease in the Contractor’s cost of, or the time required for, performance of any part of the work under this contract, whether changed or not changed by such conduct, an equitable adjustment shall be made--

(i) In the contract price or delivery schedule or both; and

(ii) In such other provisions of the contract as may be affected.

(2) The contract shall be modified in writing accordingly. In the case of drawings, designs or specifications which are defective and for which the Government is responsible, the equitable adjustment shall include the cost and time extension for delay reasonably incurred by the Contractor in attempting to comply with the defective drawings, designs or specifications before the Contractor identified, or reasonably should have identified, such defect. When the cost of property made obsolete or excess as a result of a change confirmed by the Contracting Officer under this clause is included in the equitable adjustment, the Contracting Officer shall have the right to prescribe the manner of disposition of the property. The equitable adjustment shall not include increased costs or time extensions for delay resulting from the Contractor’s failure to provide notice or to continue performance as provided, respectively, in (b) and (c) above.

135. DFARS 252.247-7023 TRANSPORTATION OF SUPPLIES BY SEA (NOV 1995)

(a) Definitions. As used in this clause--

(1) "Components" means articles, materials, and supplies incorporated directly into end products at any level of manufacture, fabrication, or assembly by the Contractor or any subcontractor.

(2) "Department of Defense (DoD)" means the Army, Navy, Air Force, Marine Corps, and defense agencies.

(3) "Foreign flag vessel" means any vessel that is not a U.S.-flag vessel.

(4) "Ocean transportation" means any transportation aboard a ship, vessel, boat, barge, or ferry through international waters.

(5) "Subcontractor" means a supplier, materialman, distributor, or vendor at any level below the prime Contractor whose contractual obligation to perform results from, or is conditioned upon, award of the prime contract and who is performing any part of the work or other requirement of the prime contract. However, effective May 1, 1996, the term does not include a

supplier, materialman, distributor, or vendor of commercial items or commercial components.

(6) "Supplies" means all property, except land and interests in land, that is clearly identifiable for eventual use by or owned by the DoD at the time of transportation by sea.

(i) An item is clearly identifiable for eventual use by the DoD if, for example, the contract documentation contains a reference to a DoD contract number or a military destination.

(ii) Supplies includes (but is not limited to) public works; buildings and facilities; ships; floating equipment and vessels of every character, type, and description, with parts, subassemblies, accessories, and equipment; machine tools; material; equipment; stores of all kinds; end items; construction materials; and components of the foregoing.

(7) "U.S.-flag vessel" means a vessel of the United States or belonging to the United States, including any vessel registered or having national status under the laws of the United States.

(b) The Contractor shall employ U.S.-flag vessels in the transportation by sea of any supplies to be furnished in the performance of this contract. The Contractor and its subcontractors may request that the Contracting Officer authorize shipment in foreign-flag vessels, or designate available U.S.-flag vessels, if the Contractor or a subcontractor believes that--

(1) U.S.-flag vessels are not available for timely shipment;

(2) The freight charges are inordinately excessive or unreasonable; or

(3) Freight charges are higher than charges to private persons for transportation of like goods.

(c) The Contractor must submit any request for use of other than U.S.-flag vessels in writing to the Contracting Officer at least 45 days prior to the sailing date necessary to meet its delivery schedules. The Contracting Officer will process requests submitted after such date(s) as expeditiously as possible, but the Contracting Officer’s failure to grant approvals to meet the shipper’s sailing date will not of itself constitute a compensable delay under this or any other clause of this contract. Requests shall contain at a minimum--

(1) Type, weight, and cube of cargo;

(2) Required shipping date;

(3) Special handling and discharge requirements;

(4) Loading and discharge points;

(5) Name of shipper and consignee;

(6) Prime contract number; and

(7) A documented description of efforts made to secure U.S.-flag vessels, including points of contact (with names and telephone numbers) with at least two U.S.-flag carriers contacted. Copies of telephone notes, telegraphic and facsimile message or letters will be sufficient for this purpose.

(d) The Contractor shall, within 30 days after each shipment covered by this clause, provide the Contracting Officer and the Division of National Cargo, Office of Market Development, Maritime Administration, U.S. Department of Transportation, Washington, DC 20590, one copy of the rated on board vessel operating carrier’s ocean bill of lading, which shall contain the following information--

(1) Prime contract number;

(2) Name of vessel;

(3) Vessel flag of registry;

(4) Date of loading;

(5) Port of loading;

(6) Port of final discharge;

(7) Description of commodity;

(8) Gross weight in pounds and cubic feet if available;

(9) Total ocean freight in U.S. dollars; and

(10) Name of the steamship company.

(e) The Contractor agrees to provide with its final invoice under this contract a representation that to the best of its knowledge and belief--

(1) No ocean transportation was used in the performance of this contract;

(2) Ocean transportation was used and only U.S.-flag vessels were used for all ocean shipments under the contract;

(3) Ocean transportation was used, and the Contractor had the written consent of the Contracting Officer for all non-U.S.-flag ocean transportation; or

(4) Ocean transportation was used and some or all of the shipments were made on non-U.S.-flag vessels without the written consent of the Contracting Officer. The Contractor shall describe these shipments in the following format:

	Item Description	Contract Line Items	Quantity
Total....			

(f) If the final invoice does not include the required representation, the Government will reject and return it to the Contractor as an improper invoice for the purposes of the Prompt Payment clause of this contract. In the event there has been unauthorized use of non-U.S.-flag vessels in the performance of this contract, the Contracting Officer is entitled to equitably adjust the contract, based on the unauthorized use.

(g) The Contractor shall include this clause, including this paragraph (g) in all subcontracts under this contract, which exceed the simplified acquisition threshold in Part 13 of the Federal Acquisition Regulation.

136. FAR 52.252-4 ALTERATIONS IN CONTRACT (APR 1984)

Portions of this contract are altered as follows: None

137. FAR 52.252-6 AUTHORIZED DEVIATIONS IN CLAUSES (APR 1984)

(a) The use in this solicitation or contract of any Federal Acquisition Regulation (48 CFR Chapter 1) clause with an authorized deviation is indicated by the addition of "(DEVIATION)" after the date of the clause.

(b) The use in this solicitation or contract of any Department of Defense FAR Supplement (48 CFR Chapter 2) clause with an authorized deviation is indicated by the addition of "(DEVIATION)" after the name of the regulation.

138. DFARS 252.223-7004 DRUG-FREE WORK FORCE (SEP 1988)

(a) Definitions.

(1) "Employee in a sensitive position," as used in this clause, means an employee who has been granted access to classified information; or employees in other positions that the Contractor determines involve national security, health or safety, or functions other than the foregoing requiring a high degree of trust and confidence.

(2) "Illegal drugs," as used in this clause, means controlled substances included in Schedules I and II, as defined by section 802(6) of Title 21 of the United States Code, the possession of which is unlawful under Chapter 13 of that Title. The term "illegal drugs" does not mean the use of a controlled substance pursuant to a valid prescription or other uses authorized by law.

(b) The Contractor agrees to institute and maintain a program for achieving the objective of a drug-free work force. While this clause defines criteria for such a program, contractors are encouraged to implement alternative approaches comparable to the criteria in paragraph (c) that are designed to achieve the objectives of this clause.

(c) Contractor programs shall include the following, or appropriate alternatives:

(1) Employee assistance programs emphasizing high level direction, education, counseling, rehabilitation, and coordination with available community resources;

(2) Supervisory training to assist in identifying and addressing illegal drug use by Contractor employees;

(3) Provisions for self-referrals as well as supervisory referrals to treatment with maximum respect for individual confidentiality consistent with safety and security issues;

(4) Provision for identifying illegal drug users, including testing on a controlled and carefully monitored basis. Employee drug testing programs shall be established taking account of the following:

(i) The Contractor shall establish a program that provides for testing for the use of illegal drugs by employees in sensitive positions. The extent of and criteria for such testing shall be determined by the Contractor based on considerations that include the nature of the work being performed under the contract, the employee's duties, the efficient use of Contractor resources, and the risks to health, safety, or national security that could result from the failure of an employee adequately to discharge his or her position.

(ii) In addition, the Contractor may establish a program for employee drug testing--

(A) When there is a reasonable suspicion that an employee uses illegal drugs; or

(B) When an employee has been involved in an accident or unsafe practice;

(C) As part of or as a follow-up to counseling or rehabilitation for illegal drug use;

(D) As part of a voluntary employee drug testing program

(iii) The Contractor may establish a program to test applicants for employment for illegal drug use.

(iv) For the purpose of administering this clause, testing for illegal drugs may be limited to those substances for which testing is prescribed by section 2.1 of Subpart B of the "Mandatory Guidelines for Federal Workplace Drug Testing Programs" (53FR 11980 (April 11, 1988)), issued by the Department of Health and Human Services.

(d) Contractors shall adopt appropriate personnel procedures to deal with employees who are found to be using drugs illegally. Contractors shall not allow any employee to remain on duty or perform in a sensitive position who is found to use illegal drugs until such time as the Contractor, in accordance with procedures established by the Contractor, determines that the employee may perform in such a position.

(e) The provisions of this clause pertaining to drug testing programs shall not apply to the extent they are inconsistent with state or local law, or with an existing collective bargaining agreement; provided that with respect to the latter, the Contractor agrees that those issues that are in conflict will be a subject of negotiation at the next collective bargaining session.

139. EFARS 52.249-5000 BASIS FOR SETTLEMENT OF PROPOSALS (DEC 1995)

Actual costs will be used to determine equipment costs for a settlement proposal submitted on the total cost basis under FAR 49.206-2(b). In evaluating a termination settlement proposal using the total cost basis, the following principles will be applied to determine allowable equipment costs:

(1) Actual costs for each piece of equipment or groups of similar serial or series equipment need not be available in the Contractor's accounting records to determine total actual equipment costs.

(2) If equipment costs have been allocated to a contract using predetermined rates, those charges will be adjusted to actual costs.

(3) Recorded job costs adjusted for unallowable expenses will be used to determine equipment operating expenses.

(4) Ownership costs (depreciation) will be determined using the Contractor's depreciation schedule (subject to the provisions of FAR 31.205-11).

(5) License, taxes, storage and insurance costs are normally recovered as an indirect expense and unless the Contractor charges these costs directly to contracts, they will be recovered through the indirect expense rate.

END OF SECTION

SECTION 00800

SPECIAL CONTRACT REQUIREMENTS

SECTION 00800

SPECIAL CONTRACT REQUIREMENTS

1. FAR 52.252-1 SOLICITATION PROVISIONS INCORPORATED BY REFERENCE (JUN 1988)

This solicitation incorporates one or more solicitation provisions by reference, with the same force and effect as if they were given in full text. Upon request, the Contracting Officer will make their full text available.

SOLICITATION PROVISIONS BY REFERENCE:

2. FAR 52.211-13 TIME EXTENSIONS (APR 1984)

3. FAR 52.223-14 TOXIC CHEMICAL RELEASE REPORTING (OCT 1996)

4. FAR 52.228-5 INSURANCE--WORK ON A GOVERNMENT INSTALLATION (JAN 1997)

5. FAR 52.246-12 INSPECTION OF CONSTRUCTION (AUG 1996)

THE FOLLOWING SOLICITATION PROVISIONS ARE INCLUDED IN FULL TEXT

6. FAR 52.204-4 PRINTING/COPYING DOUBLE-SIDED ON RECYCLED PAPER (JUN 1996)
7. DFARS 252.204-7003 CONTROL OF GOVERNMENT PERSONNEL WORK PRODUCT (APR 1992)
8. FAR 52.211-10 COMMENCEMENT, PROSECUTION, AND COMPLETION OF WORK (APR 1994)
9. FAR 52.211-12 LIQUIDATED DAMAGES--CONSTRUCTION (APR 1984)
10. SAACONS 52.0211.4853 WORK DAYS AND HOURS (APR 1992)
11. SAACONS 52.0215-4101 ALTERNATE STRUCTURED APPROACH TO WEIGHTED GUIDELINE METHOD FOR CONSTRUCTION CONTRACTS (EFARS 15.973-100) (MAY 1995)
12. SAACONS 52.0219-4509 SUBCONTRACTING WITH SMALL, SMALL DISADVANTAGED AND WOMEN-OWNED SMALL BUSINESSES (JAN 1996)
13. DFARS 252.223-7006 PROHIBITION ON STORAGE AND DISPOSAL OF TOXIC AND HAZARDOUS MATERIALS (APR 1993)
14. SAACONS 52.0223-4803 HAZARDOUS MATERIALS DELIVERED UNDER THIS CONTRACT (MAY 1993)
15. SAACONS 52.0228-4502 MINIMUM INSURANCE REQUIRED (MAY 1993)
16. EFARS 52.231-5000 EQUIPMENT OWNERSHIP AND OPERATING EXPENSE SCHEDULE (MAR 1995)--EFARS
17. FAR 52.232-27 PROMPT PAYMENT FOR CONSTRUCTION CONTRACTS (MAR 1994)
18. DFARS 252.232-7006 REDUCTION OR SUSPENSION OF CONTRACT PAYMENTS UPON FINDING OF FRAUD (AUG 1992)
19. SAACONS 52.0232-4501 INVOICES (AUG 1991)
20. FAR 52.236-1 PERFORMANCE OF WORK BY THE CONTRACTOR (APR 1984)
21. FAR 52.236-4 PHYSICAL DATA (APR 1984)
22. DFARS 252.236-7001 CONTRACT DRAWINGS, MAPS, AND SPECIFICATIONS (DEC 1991)

23.	SAACONS 52.0236-4801	SALVAGE AND SCRAP GOVERNMENT PROPERTY (OCT 1993)
24.	SAACONS 52.0236-4581	AVAILABILITY OF UTILITIES SERVICES (APR 1992)
25.	SAACONS 52.0236-4901	PARTNERING (MAR 1992)

FULL TEXT SOLICITATION PROVISIONS:

6. FAR 52.204-4 PRINTING/COPYING DOUBLE-SIDED ON RECYCLED PAPER (JUN 1996)

(a) In accordance with Executive Order 12873, dated October 20, 1993, as amended by Executive Order 12995, dated March 25, 1996, the Offeror/Contractor is encouraged to submit paper documents, such as offers, letters, or reports, that are printed/copied double-sided on recycled paper that has at least 20% postconsumer material.

(b) The 20% standard applies to high-speed copies paper, offset paper, forms bond, computer printout paper, and carbonless paper, file folders, white woven envelopes, and other uncoated printed and writing paper, such as writing and office paper, book paper, cotton fiber paper, and cover stock. An alternative to meeting the 20 % postconsumer material standard is 50 % recovered material content of certain industrial by-products.

7. DFARS 252.204-7003 CONTROL OF GOVERNMENT PERSONNEL WORK PRODUCT (APR 1992)

The Contractor's procedures for protecting against unauthorized disclosure of information shall not require Department of Defense employees or members of the Armed Forces to relinquish control of their work products, whether classified or not, to the Contractor.

8. FAR 52.211-10 COMMENCEMENT, PROSECUTION, AND COMPLETION OF WORK (APR 1994)

The Contractor shall be required to (a) commence work under this contract within (10) calendar days after the date the Contractor receives the notice to proceed, (b) prosecute the work diligently, and (c) complete the entire work ready for use not later than 420 calendar days after receipt of notice to proceed. The time stated for completion shall include final cleanup of the premises.

9. FAR 52.211-12 LIQUIDATED DAMAGES--CONSTRUCTION (APR 1984)

(a) If the Contractor fails to complete the work within the time specified in the contract, or any extension, the Contractor shall pay to the Government as liquidated damages, the sum of $855 for each day of delay.
(b) If the Government terminates the Contractor's right to proceed, the resulting damage will consist of liquidated damages until such reasonable time as may be required for final completion of the work together with any increased costs occasioned the Government in completing the work.

(c) If the Government does not terminate the Contractor's right to proceed, the resulting damage will consist of liquidated damages until the work is completed or accepted.

10. SAACONS 52.0211.4853 WORK DAYS AND HOURS (APR 1992)

The normal work days and hours for this project will be Monday through Friday, excluding federal holidays, from 7:00 a.m. to 5:00 p.m. Access to the work site may be restricted to these hours and days. Work during other than normal hours and days must be coordinated in advance with the Administrative Contracting Officer.

11. SAACONS 52.0215-4101 ALTERNATE STRUCTURED APPROACH TO WEIGHTED GUIDELINE METHOD FOR CONSTRUCTION CONTRACTS (EFARS 15.973-100) (MAY 1995)

The following alternate structured approach shall be used for all fixed-price construction contract actions.

Factor	Rate	Weight	Value
Degree of risk	20		
Relative difficulty of work	15		
Size of job	15		
Period of performance	15		
Contractor’s investment	5		
Assistance by Government	5		
Subcontracting	25		
Total	100%		

Based on the circumstances of the procurement action, each of the above factors shall be weighted from .03 to .12 as indicated below. "Value shall be obtained by multiplying the rate by the weight. The Value column when totaled indicates the fair and reasonable profit percentage under the circumstances of the particular procurement. The profit percentage should be multiplied by the total contract costs, including general and administrative costs.

(1) Degree of risk. Where the work involves no risk or the degree of risk is very small, the weighting should be .03; as the degree of risk increases, the weighting should be increased up to a maximum of .12. Lump sum items shall generally have a higher weight than unit price items; other things to consider include the nature of the work and where it is to be performed. Consider the portion of the work to be done by subcontractors, amount and type of labor included in costs, whether the negotiation is before or after performance of the work, etc. Modifications settled before the fact have much greater risk than those settled after the fact. A weight of .03 is appropriate for after the fact equitable adjustments and/or settlements.

(2) Relative Difficulty of Work: If the work is difficult and complex, the weight should be .12 and should be proportionately reduced to .03 on the simplest of jobs. This factor is tied in to some extent with the degree of risk. Some other things to consider are the nature of the work, by whom it is to be done (i.e., subcontractors, consultants), what is the time schedule.

(3) Size of Job. Work of $100,000 or less shall be weighted at .12. Work estimated between $100,000 and $5,000,000 shall be proportionately weighted from .12 to .05. Work from $5,000,000 to $10,000,000 shall be weighted at .04. Work in excess of $10,000,000 shall be weighted at .03. It should be noted that control of fixed expenses generally improves with increased job magnitude.

(4) Period of Performance. Work not to exceed one month is to be proportionately weighted at .03. Work in excess of 24 months is to be weighted at .12. Durations between one month and 24 months are to be proportionately weighted between .03 and .12.

(5) Contractor’s Investment. To be weighted from .03 to .12 on the basis of below average, average and above average. Things to consider include amount of subcontracting, Government-furnished property or data such as surveys, soil tests, method of making progress payments, and any mobilization payment items.

(6) Assistance by Government. To be weighted from .12 to .03 on the basis of average to above average. Consider use of Government-owned property, equipment and facilities, and expediting assistance.

(7) Subcontracting. To be weighted inversely proportional to the amount of subcontracting. Where 80% or more of the work is to be subcontracted use .03. The weighting should be increased proportionately to .12 where all the work is performed by the contractor's own forces.

12. SAACONS 52.0219-4509 SUBCONTRACTING WITH SMALL, SMALL DISADVANTAGED AND WOMEN-OWNED SMALL BUSINESSES (JAN 1996)

Contractors are cautioned that failure of any Contractor to comply in good faith with the Contract Clauses titled (1) Utilization of Small, Small Disadvantaged and Women-Owned Small Business Concerns or (2) Small, Small Disadvantaged and Women-Owned Small Business Subcontracting Plan, when applicable, will be a material breach of contract. In order to assist contractors in developing a source list of small, small disadvantaged and/or women-owned small business concerns you are encouraged to contact your minority contractor associates, the local Minority Business Development Agency and the appropriate General Business Service Centers in your Standard Metropolitan Statistical Area. Contractors may obtain addresses of these sources from:

Write: US Army Engineer District, Sacramento
ATTN: Contracting Division, Deputy for Small Business
1325 J Street, 8th Floor
Sacramento, California 95814-2922

Or Contact: Mr. John Szabo
Deputy for Small Business
Telephone: (916) 557-5202

13. DFARS 252.223-7006 PROHIBITION ON STORAGE AND DISPOSAL OF TOXIC AND HAZARDOUS MATERIALS (APR 1993)

(a) Definitions. As used in this clause--

(1) "Storage" means a non-transitory, semi-permanent or permanent holding, placement, or leaving of material. It does not include a temporary accumulation of a limited quantity of a material used in or a waste generated or resulting from authorized activities, such as servicing, maintenance, or repair of Department of Defense (DoD) items, equipment, or facilities.

(2) "Toxic or hazardous materials" means:

(i) Materials referred to in section 101(14) of the Comprehensive Environmental Response, Compensation, and Liability Act (CERCLA) of 1980 (42 U.S.C. 9601(14)) and materials designated under section 102 of CERCLA (42. U.S.C. 9602 (40 CFR Part 302);

(ii) Materials that are of an explosive, flammable, or pyrotechnic nature; or

(iii) Materials otherwise identified by the Secretary of Defense as specified in DoD regulations.

(b) In accordance with 10 U.S.C. 2692, the Contractor is prohibited from storing or disposing of non-DoD-owned toxic or hazardous materials on a DoD installation, except to the extent authorized by a statutory exception to 10 U.S.C. 2692 or as authorized by the Secretary of Defense or his designee.

14. SAACONS 52.0223-4803 HAZARDOUS MATERIALS DELIVERED UNDER THIS CONTRACT (MAY 1993)

(a) If any hazardous materials will be delivered under this contract (see Section 00600, FAR 52.223-3, and DFARS 252.223-7001), the Material Safety Data Sheets (MSDS) for locally purchased, nonstandard stock hazardous material will be submitted to the Corps of Engineers Contracting Officer or Contracting

Officer's Representative. For all other materials, the MSDS will also be submitted to U.S. Army Environmental Hygiene Agency, ATTN: HSE-OI, Aberdeen Proving Grounds MD 21010.

(b) Hazardous material is defined in Federal Standard No. 313, sold by the General Services Administration Specifications Unit (3FBP-W), 7th & D Streets, SW, Washington DC 20407.

15. SAACONS 52.0228-4502 MINIMUM INSURANCE REQUIRED (MAY 1993)

The contract clause, FAR 52.228-5, applies to this contract even if the work or any portion of the work is not performed on a Government installation. In accordance with FAR 52.228-5 and FAR 28.307-2, the contractor shall procure and thereafter maintain during the entire period of this performance under this contract the following minimum insurance.

TYPE	AMOUNT
Worker's Compensation and Employer's Liability	Comply with Federal and State worker's comp and occupational disease statutes. Employer's liability of at least $100,000
General Liability (Comprehensive)	Bodily injury liability of at least $500,000 per occurrence.
Automobile Liability (Comprehensive):	
Bodily Injury & Property Damage	At least $200,000 per person and $500,000 per occurrence. At least $20,000 per occurrence.
Longshoremen's and Harbor Worker's Compensation (When applicable by location of contract performance)	Coverage complying with applicable Federal statute (33 USC 901 et seq).

16. EFARS 52.231-5000 EQUIPMENT OWNERSHIP AND OPERATING EXPENSE SCHEDULE (MAR 1995)--EFARS

(a) This statement shall become operative only for negotiated contracts where cost or pricing data is requested, and for modifications to sealed bid or negotiated contracts where cost or pricing data is requested. This clause does not apply to terminations. See 52.249-5000, Basis for Settlement of Proposals, and FAR Part 49.

(b) Allowable cost for CONSTRUCTION and marine plant and equipment in sound workable condition owned or controlled and furnished by a contractor or subcontractor at any tier shall be based on actual cost data for each piece of equipment or groups of similar serial and series for which the Government can determine both ownership and operating costs from the contractor's accounting records. When both ownership and operating costs cannot be determined for any piece of equipment or groups of similar serial or series equipment from the contractor's accounting records, costs for that equipment shall be based upon the applicable provisions of EP 1110-1-8, CONSTRUCTION Equipment Ownership and Operating Expense Schedule, Region VII. Working conditions shall be considered to be average for determining equipment rates using the schedule unless specified otherwise by the contracting officer. For equipment not included in the schedule, rates for comparable pieces of equipment may be used

or a rate may be developed using the formula provided in the schedule. For forward pricing, the schedule in effect at the time of negotiations shall apply. For retroactive pricing, the schedule in effect at the time the work was performed shall apply.

(c) Equipment rental costs are allowable, subject to the provisions of FAR 31.105(d)(ii) and FAR 31.205-36. Rates for equipment rented from an organization under common control, lease-purchase arrangements, and sale-leaseback arrangements, will be determined using the schedule, except that actual rates will be used for equipment leased from an organization under common control that has an established practice of leasing the same or similar equipment to unaffiliated lessees.

(d) When actual equipment costs are proposed and the total amount of the pricing action exceeds the small purchase threshold, the contracting officer shall request the contractor to submit either certified cost or pricing data, or partial/limited data, as appropriate. The data shall be submitted on Standard Form 1411, Contract Pricing Proposal Cover Sheet.

NOTE: See also, Specification Section 01500. A copy of the EP 1110-1-8 is available for review in the Corps of Engineers, Sacramento District Office, 1325 J Street, Library, 8th floor, telephone (916) 557-6657. Copies are available for a nominal charge from the Government Printing Office, telephone (202) 783-3238.

17. FAR 52.232-27 PROMPT PAYMENT FOR CONSTRUCTION CONTRACTS (MAR 1994)

Notwithstanding any other payment terms in this contract, the Government will make invoice payments and contract financing payments under the terms and conditions specified in this clause. Payment shall be considered as being made on the day a check is dated or an electronic funds transfer is made. Definitions of pertinent terms are set forth in 32.902. All days referred to in this clause are calendar days, unless otherwise specified.

(a) Invoice Payments.

(1) For purposes of this clause, there are several types of invoice payments which may occur under this contract, as follows:

(i) Progress payments, if provided for elsewhere in this contract, based on Contracting Officer approval of the estimated amount and value of work or services performed, including payments for reaching milestones in any project:

(A) The due date for making such payments shall be 25 days after receipt of the payment request by the designated billing office. However, if the designated billing office fails to annotate the payment request with the actual date of receipt, the payment due date shall be deemed to be the 25th day after the date the Contractor’s payment request is dated, provided a proper payment request is received and there is no disagreement over quantity, quality, or Contractor compliance with contract requirements.

(B) The due date for payment of any amounts retained by the Contracting Officer in accordance with the clause at 52.232-5, Payments Under Fixed-Price CONSTRUCTION Contracts, shall be as specified in the contract or, if not specified, 30 days after approval for release to the Contractor by the Contracting Officer.

(ii) Final payments based on completion and acceptance of all work and presentation of release of all claims against the Government arising by virtue of the contract, and payments for partial deliveries that have been accepted by the Government (e.g., each separate building, public work, or other division of the contract for which the price is stated separately in the contract):

(A) The due date for making such payments shall be either the 30th day after receipt by the designated billing office of a proper invoice from the Contractor, or the 30th day after Government acceptance of the work or

services completed by the Contractor, whichever is later. However, if the designated billing office fails to annotate the invoice with the date of actual receipt, the invoice payment due date shall be deemed to be the 30th day after the date the Contractor's invoice is dated, provided a proper invoice is received and there is no disagreement over quantity, quality, or Contractor compliance with contract requirements.

(B) On a final invoice where the payment amount is subject to contract settlement actions (e.g., release of claims), acceptance shall be deemed to have occurred on the effective date of the contract settlement.

(2) An invoice is the Contractor's bill or written request for payment under the contract for work or services performed under the contract. An invoice shall be prepared and submitted to the designated billing office. A proper invoice must include the items listed in subdivisions (a)(2)(i) through (a)(2)(ix) of this clause. If the invoice does not comply with these requirements, the Contractor will be notified of the defect within 7 days after receipt of the invoice at the designated billing office. Untimely notification will be taken into account in the computation of any interest penalty owed the Contractor in the manner described in subparagraph (a)(4) of this clause:

(i) Name and address of the Contractor.

(ii) Invoice date.

(iii) Contract number or other authorization for work or services performed (including order number and contract line item number).

(iv) Description of work or services performed.

(v) Delivery and payment terms (e.g., prompt payment discount terms).

(vi) Name and address of Contractor official to whom payment is to be sent (must be the same as that in the contract or in a proper notice of assignment).

(vii) Name (where practicable), title, phone number, and mailing address of person to be notified in event of a defective invoice.

(viii) For payments described in subdivision (a)(1)(i) of this clause, substantiation of the amounts requested and certification in accordance with the requirements of the clause at 52.232-5, Payments Under Fixed-Price CONSTRUCTION Contracts.

(ix) Any other information or documentation required by the contract.

(3) An interest penalty shall be paid automatically by the designated payment office, without request from the Contractor, if payment is not made by the due date and the conditions listed in subdivisions (a)(3)(i) through (a)(3)(iii) of this clause are met, if applicable.

(i) A proper invoice was received by the designated billing office.

(ii) A receiving report or other Government documentation authorizing payment was processed and there was no disagreement over quantity, quality, Contractor compliance with any contract term or condition, or requested progress payment amount.

(iii) In the case of a final invoice for any balance of funds due the Contractor for work or services performed, the amount was not subject to further contract settlement actions between the Government and the Contractor.

(4) The interest penalty shall be at the rate established by the Secretary of the Treasury under section 12 of the Contract Disputes Act of 1978 (41 U.S.C. 611) that is in effect on the day after the due date, except where the interest penalty is prescribed by other governmental authority. This rate is referred to as the "Renegotiation Board Interest Rate," and it is published in the Federal Register semiannually on or about January 1 and July 1. The interest penalty shall accrue daily on the invoice payment amount approved by the Government and be compounded in 30-day increments inclusive from the first day after the due date through the payment date. That is, interest accrued at the end of any 30-day period will be added to the approved invoice payment amount and be subject to interest penalties if not paid in the succeeding 30-day period. If the designated billing office failed to notify

the Contractor of a defective invoice within the periods prescribed in subparagraph (a)(2) of this clause, then the due date on the corrected invoice will be adjusted by subtracting the number of days taken beyond the prescribed notification of defects period. Any interest penalty owed the Contractor will be based on this adjusted due date. Adjustments will be made by the designated payment office for errors in calculating interest penalties, if requested by the Contractor.

(i) For the sole purpose of computing an interest penalty that might be due the Contractor for payments described in subdivision (a)(1)(ii) of this clause, Government acceptance or approval shall be deemed to have occurred constructively on the 7th day after the Contractor has completed the work or services in accordance with the terms and conditions of the contract. In the event that actual acceptance or approval occurs within the constructive acceptance or approval period, the determination of an interest penalty shall be based on the actual date of acceptance or approval. Constructive acceptance or constructive approval requirements do not apply if there is a disagreement over quantity, quality, or Contractor compliance with a contract provision. These requirements also do not compel Government officials to accept work or services, approve Contractor estimates, perform contract administration functions, or make payment prior to fulfilling their responsibilities.

(ii) The following periods of time will not be included in the determination of an interest penalty:

(A) The period taken to notify the Contractor of defects in invoices submitted to the Government, but this may not exceed 7 days.

(B) The period between the defects notice and resubmission of the corrected invoice by the Contractor.

(iii) Interest penalties will not continue to accrue after the filing of a claim for such penalties under the clause at 52.233-1, Disputes, or for more than 1 year. Interest penalties of less than $1.00 need not be paid.

(iv) Interest penalties are not required on payment delays due to disagreement between the Government and Contractor over the payment amount or other issues involving contract compliance, or on amounts temporarily withheld or retained in accordance with the terms of the contract. Claims involving disputes, and any interest that may be payable, will be resolved in accordance with the clause at 52.233-1, Disputes.

(5) An interest penalty shall also be paid automatically by the designated payment office, without request from the Contractor, if a discount for prompt payment is taken improperly. The interest penalty will be calculated on the amount of discount taken for the period beginning with the first day after the end of the discount period through the date when the Contractor is paid.

(6) If this contract was awarded on or after October 1, 1989, a penalty amount, calculated in accordance with regulations issued by the Office of Management and Budget, shall be paid in addition to the interest penalty amount if the Contractor--

(i) Is owed an interest penalty;

(ii) Is not paid the interest penalty within 10 days after the date the invoice amount is paid; and

(iii) Makes a written demand, not later than 40 days after the date the invoice amount is paid, that the agency pay such a penalty.

(b) Contract Financing Payments.

(1) For purposes of this clause, if applicable, "contract financing payment" means a Government disbursement of monies to a Contractor under a contract clause or other authorization prior to acceptance of supplies or services by the Government, other than progress payments based on estimates of amount and value of work performed. Contract financing payments include advance payments and interim payments under cost-type contracts.

(2) If this contract provides for contract financing, requests for payment shall be submitted to the designated billing office as specified in this contract or as directed by the Contracting Officer. Contract financing payments shall be made on the 30th day after receipt of a proper contract financing request by the designated billing office. In the event that an audit or other review of a specific financing request is required to ensure compliance with the terms and conditions of the contract, the designated payment office is not compelled to make payment by the due date specified. For advance payments, loans, or other arrangements that do not involve recurrent submissions of contract financing requests, payment shall be made in accordance with the corresponding contract terms or as directed by the Contracting Officer. Contract financing payments shall not be assessed an interest penalty for payment delays.

(c) The Contractor shall include in each subcontract for property or services (including a material supplier) for the purpose of performing this contract the following:

(1) A payment clause which obligates the Contractor to pay the subcontractor for satisfactory performance under its subcontract not later than 7 days from receipt of payment out of such amounts as are paid to the Contractor under this contract.

(2) An interest penalty clause which obligates the Contractor to pay to the subcontractor an interest penalty for each payment not made in accordance with the payment clause--

(i) For the period beginning on the day after the required payment date and ending on the date on which payment of the amount due is made; and

(ii) Computed at the rate of interest established by the Secretary of the Treasury, and published in the Federal Register, for interest payments under section 12 of the Contract Disputes Act of 1978 (41 U.S.C. 611) in effect at the time the Contractor accrues the obligation to pay an interest penalty.

(3) A clause requiring each subcontractor to include a payment clause and an interest penalty clause conforming to the standards set forth in subparagraphs (c)(1) and (c)(2) of this clause in each of its subcontracts, and to require each of its subcontractors to include such clauses in their subcontracts with each lower-tier subcontractor or supplier.

(d) The clauses required by paragraph (c) of this clause shall not be construed to impair the right of Contractor or a subcontractor at any tier to negotiate, and to include in their subcontract, provisions which--

(1) Permit the Contractor or a subcontractor to retain (without cause) a specified percentage of each progress payment otherwise due to a subcontractor for satisfactory performance under the subcontract without incurring any obligation to pay a late payment interest penalty, in accordance with terms and conditions agreed to by the parties to the subcontract, giving such recognition as the parties deem appropriate to the ability of a subcontractor to furnish a performance bond and a payment bond;

(2) Permit the Contractor or subcontractor to make a determination that part or all of the subcontractor’s request for payment may be withheld in accordance with the subcontract agreement; and

(3) Permit such withholding without incurring any obligation to pay a late payment penalty if--

(i) A notice conforming to the standards of paragraph (g) of this clause has been previously furnished to the subcontractor; and

(ii) A copy of any notice issued by a Contractor pursuant to subdivision (d)(3)(i) of this clause has been furnished to the Contracting Officer.

(e) If a Contractor, after making a request for payment to the Government but before making a payment to a subcontractor for the subcontractor’s performance covered by the payment request, discovers that all or a portion of the payment otherwise due such subcontractor is subject to withholding from the subcontractor in accordance with the subcontract agreement, then the Contractor shall--

(1) Furnish to the subcontractor a notice conforming to the standards of paragraph (g) of this clause as soon as practicable upon ascertaining the cause giving rise to a withholding, but prior to the due date for subcontractor payment;

(2) Furnish to the Contracting Officer, as soon as practicable, a copy of the notice furnished to the subcontractor pursuant to subparagraph (e)(1) of this clause;

(3) Reduce the subcontractor’s progress payment by an amount not to exceed the amount specified in the notice of withholding furnished under subparagraph (e)(1) of this clause;

(4) Pay the subcontractor as soon as practicable after the correction of the identified subcontract performance deficiency, and--

(i) Make such payment within--

(A) Seven days after correction of the identified subcontract performance deficiency (unless the funds therefor must be recovered from the Government because of a reduction under subdivision (e)(5)(i)) of this clause; or

(B) Seven days after the Contractor recovers such funds from the Government; or

(ii) Incur an obligation to pay a late payment interest penalty computed at the rate of interest established by the Secretary of the Treasury, and published in the Federal Register, for interest payments under section 12 of the Contracts Disputes Act of 1978 (41 U.S.C. 611) in effect at the time the Contractor accrues the obligation to pay an interest penalty;

(5) Notify the Contracting Officer upon--

(i) Reduction of the amount of any subsequent certified application for payment; or

(ii) Payment to the subcontractor of any withheld amounts of a progress payment, specifying--

(A) The amounts withheld under subparagraph (e)(1) of this clause; and

(B) The dates that such withholding began and ended; and

(6) Be obligated to pay to the Government an amount equal to interest on the withheld payments (computed in the manner provided in 31 U.S.C. 3903(c)(1)), from the 8th day after receipt of the withheld amounts from the Government until--

(i) The day the identified subcontractor performance deficiency is corrected; or

(ii) The date that any subsequent payment is reduced under subdivision (e)(5)(i) of this clause.

(f)(1) If a Contractor, after making payment to a first-tier subcontractor, receives from a supplier or subcontractor of the first-tier subcontractor (hereafter referred to as a "second-tier subcontractor") a written notice in accordance with section 2 of the Act of August 24, 1935 (40 U.S.C. 270b, Miller Act), asserting a deficiency in such first-tier subcontractor’s performance under the contract for which the Contractor may be ultimately liable, and the Contractor determines that all or a portion of future payments otherwise due such first-tier subcontractor is subject to withholding in accordance with the subcontract agreement, then the Contractor may, without incurring an obligation to pay an interest penalty under subparagraph (e)(6) of this clause--

(i) Furnish to the first-tier subcontractor a notice conforming to the standards of paragraph (g) of this clause as soon as practicable upon making such determination; and

(ii) Withhold from the first-tier subcontractor’s next available progress payment or payments an amount not to exceed the amount specified in the notice of withholding furnished under subdivision (f)(1)(i) of this clause.

(2) As soon as practicable, but not later than 7 days after receipt of satisfactory written notification that the identified subcontract performance deficiency has been corrected, the Contractor shall pay the amount withheld under subdivision (f)(1)(ii) of this clause to such first-tier subcontractor,

or shall incur an obligation to pay a late payment interest penalty to such first-tier subcontractor computed at the rate of interest established by the Secretary of the Treasury, and published in the Federal Register, for interest payments under section 12 of the Contracts Disputes Act of 1978 (41 U.S.C. 611) in effect at the time the Contractor accrues the obligation to pay an interest penalty.

(g) A written notice of any withholding shall be issued to a subcontractor (with a copy to the Contracting Officer of any such notice issued by the Contractor), specifying--

(1) The amount to be withheld;

(2) The specific causes for the withholding under the terms of the subcontract; and

(3) The remedial actions to be taken by the subcontractor in order to receive payment of the amounts withheld.

(h) The Contractor may not request payment from the Government of any amount withheld or retained in accordance with paragraph (d) of this clause until such time as the Contractor has determined and certified to the Contracting Officer that the subcontractor is entitled to the payment of such amount.

(i) A dispute between the Contractor and subcontractor relating to the amount or entitlement of a subcontractor to a payment or a late payment interest penalty under a clause included in the subcontract pursuant to paragraph (c) of this clause does not constitute a dispute to which the United States is a party. The United States may not be interpleaded in any judicial or administrative proceeding involving such a dispute.

(j) Except as provided in paragraph (I) of this clause, this clause shall not limit or impair any contractual, administrative, or judicial remedies otherwise available to the Contractor or a subcontractor in the event of a dispute involving late payment or nonpayment by the Contractor or deficient subcontract performance or nonperformance by a subcontractor.

(k) The Contractor’s obligation to pay an interest penalty to a subcontractor pursuant to the clauses included in a subcontract under paragraph (c) of this clause shall not be construed to be an obligation of the United States for such interest penalty. A cost reimbursement claim may not include any amount for reimbursement of such interest penalty.

18. DFARS 252.232-7006 REDUCTION OR SUSPENSION OF CONTRACT PAYMENTS UPON FINDING OF FRAUD (AUG 1992)

(a) 10 U.S.C. 2307(e) permits the head of the agency to reduce or suspend further payments upon a written determination by the agency head that substantial evidence exists that the Contractor’s request for advance, partial, or progress payments is based on fraud. The provisions of 10 U.S.C. 2307(e) are in addition to any other rights or remedies provided the Government by law or under contract.

(b) Actions taken by the Government in accordance with 10 U.S.C. 2307(e) shall not constitute an excusable delay under the Default clause of this contract or otherwise relieve the Contractor of its obligations to perform under this contract.

19. SAACONS 52.0232-4501 INVOICES (AUG 1991)

The Government shall pay the Contractor upon submission of proper invoices for supplies delivered and accepted or services rendered and accepted for the portion of work actually performed under this contract. Invoices will be submitted in quadruplicate to the address in Block 26, SF1442, which will be completed at time of award. Invoices shall be submitted on ENG Form 93 which will be provided to the Contractor by the Government

20. FAR 52.236-1 PERFORMANCE OF WORK BY THE CONTRACTOR (APR 1984)

The Contractor shall perform on the site, and with its own organization, work equivalent to at least twenty-five percent of the total amount of work to be performed under the contract. This percentage may be reduced by a supplemental agreement to this contract if, during performing the work, the Contractor requests a reduction and the Contracting Officer determines that the reduction would be to the advantage of the Government.

21. FAR 52.236-4 PHYSICAL DATA (APR 1984)

Data and information furnished or referred to below is for the Contractor's information. The Government shall not be responsible for any interpretation of or conclusion drawn from the data or information by the Contractor.

(a) The indications of physical conditions on the drawings and in the specifications are the result of site investigations by the Government.

(b) Weather conditions: The Contractor shall satisfy himself/herself as to the hazards likely to arise from weather conditions. Complete weather records and reports may be obtained from any U.S. Weather Bureau Office.

(c) Transportation Facilities: The Contractor shall make his/her own investigation of the conditions of existing public and private roads and of clearances, restrictions, bridge load limits and other limitations affecting transportation and ingress and egress at the job site. The unavailability of transportation facilities or limitations thereon shall not become a basis for claims against the Government or extension of time for completion of the work.

22. DFARS 252.236-7001 CONTRACT DRAWINGS, MAPS, AND SPECIFICATIONS (DEC 1991)

(a) The Government--

(1) Will provide the Contractor, without charge, one set of large-scale contract drawings and specifications except publications incorporated into the technical provisions by reference;

(2) Will furnish additional sets on request, for the cost of reproduction; and

(3) May, at its option, furnish the Contractor one set of reproducibles, or half-size drawings, in lieu of the drawings in paragraph (a)(1) of this clause.

(b) The Contractor shall--

(1) Check all drawings furnished immediately upon receipt;

(2) Compare all drawings and verify the figures before laying out the work;

(3) Promptly notify the Contracting Officer of any discrepancies; and

(4) Be responsible for any errors which might have been avoided by complying with this paragraph (b).

(c) Large scale drawings shall, in general, govern small scale drawings. Figures marked on drawings shall, in general, be followed in preference to scale measurements.

(d) Omissions from the drawings or specifications or the misdescription of details of work which are manifestly necessary to carry out the intent of the drawings and specifications, or which are customarily performed, shall not relieve the Contractor from performing such omitted or misdescribed details of the work, but shall be performed as if fully and correctly set forth and described in the drawings and specifications.

(e) The work shall conform to the specifications and the contract drawings identified on the following index of drawings:

Drawing File No.

180-25-761

Sheet No.	Description	Rev. No.
G001	COVER SHEET	
G002	DRAWING INDEX	
G003	GENERAL SHEET INFORMATION - ABBREVIATIONS AND SYMBOLS	
C001	VICINITY AND LOCATION MAPS	
C002	CIVIL ABBREVIATIONS & LEGEND	
C003	OVERALL SITE PLAN	
C004	EXISTING CONDITIONS PLAN	
C101	DEMOLITION PLAN	
C201	SITE PLAN	
C202	GRADING PLAN	
C203	UTILITY PLAN	
C204	JOINT PLAN AND STEP DETAILS	
C205	EROSION CONTROL PLAN	
C301	PAVING AND SITE DETAILS	
C302	UTILITY PLAN	
C303	MISCELLANEOUS DETAILS & SECTIONS	
C304	STORM DRAIN PROFILES	
C-2.0	LOG OF EXPLORATIONS	
C-2.1	LOG OF EXPLORATIONS	
L001	TREE LANDSCAPE PLAN - NORTH AND SOUTH ENTRANCES	
L002	IRRIGATION PLAN & LANDSCAPE DETAILS	
A101	DEMOLITION PLANS	
A102	DEMOLITION ELEVATIONS	
A201	FLOOR PLAN - ADDITION	
A202	REFLECTED CEILING PLAN - ADDITION	
A203	ROOF PLAN & DETAILS	
A301	ADDITION BUILDING ELEVATIONS	
A302	BUILDING SECTIONS - ADDITION	
A401	ADDITION ROOM FINISH AND COLOR SCHEDULES	
A402	ALTERATION ROOM FINISH AND COLOR SCHEDULES	
A403	TILE & CARPET PATTERN DETAILS	
A404	DOOR SCHEDULES - DOOR AND FRAME ELEVATIONS	
A405	FRAME ELEVATIONS - DOOR DETAILS	
A406	DOOR DETAILS	
A501	ENLARGED TOILET PLANS AND ELEVATIONS	
A502	INTERIOR ELEVATIONS	
A503	MILLWORK DETAILS	
A601	WALL SECTIONS	
A602	WALL SECTIONS	
A603	WALL SECTIONS - INTERIOR PARTITION TYPES	
A701	PLAN DETAILS	
A702	PLAN DETAILS	
A703	PLAN DETAILS	
A704	PLAN DETAILS	
A801	VERTICAL DETAILS	
A802	VERTICAL DETAILS	
A901	EQUIPMENT PLAN - AREA A	
A902	EQUIPMENT PLAN - AREA B	
A903	NOT USED	
A904	EQUIPMENT SCHEDULE	
A905	EQUIPMENT SCHEDULE	

A906	EQUIPMENT SCHEDULE
A907	EQUIPMENT SCHEDULE
A908	SIGNAGE PLAN - ADDITION
A909	SIGNAGE DETAILS
S001	STANDARD DETAILS
S002	STANDARD DETAILS
S101	FOOTING & FOUNDATION PLAN
S201	ROOF FRAMING PLAN
S301	FOUNDATION DETAILS
S302	FOUNDATION DETAILS
S401	ROOF FRAMING DETAILS
S402	ROOF FRAMING DETAILS
S403	ROOF FRAMING DETAILS
S501	BRACE ELEVATIONS
S601	COLUMN SCHEDULE
P001	PLUMBING LEGEND & ABBREVIATIONS
P301	ADDITION PLUMBING UNDERFLOOR PLAN
P401	ADDITON PLUMBING FLOOR PLAN
P601	PLUMBING ENLARGED PLANS AND RISER DIAGRAMS
P602	PLUMBING DETAILS
P701	PLUMBING SCHEDULES
MOO1	HVAC LEGEND & ABBREVIATIONS
M301	ADDITION HVAC FLOOR PLAN
M302	ADDITION HVAC PIPING FLOOR PLAN
M401	ENLARGED HVAC PLANS AND SECTIONS
M402	IBS SECTIONS
M601	HVAC DETAILS
M602	HVAC DETAILS
M603	HVAC FLOW DIAGRAMS
M604	AIR FLOW DIAGRAM AHD HVAC DETAILS
M701	HVAC SCHEDULES
M801	HVAC CONTROLS LEGEND
M802	AHU-1 CONTROLS
M803	AHU-1 CONTROLS
M804	AHU-1 CONTROLS
M805	BOILER CONTROLS
M806	BOILER CONTROLS
M807	BOILER CONTROLS
M808	CHILLER CONTROLS
M811	MISCELLANEOUS CONTROLS
M901	SEISMIC ZONE 3
E001	INDEX, GENERAL NOTES, LEGEND
E201	ELECTRICAL SITE PLAN
E202	EXTERIOR DETAILS
E203	ELECTRICAL SITE LIGHTING PLAN
E301	LIGHTING FLOOR PLAN - ADDITION
E303	LIGHTING FIXTURE SCHEDULE AND DETAILS
E401	POWER FLOOR PLAN - AADDITION
E501	MECHANICAL EQUIPMENT POWER - FLOOR PLAN - ADDITION
E601	ELECTRICAL ONE-LINE DIAGRAM AND SCHEDULES
E602	ELECTRICAL PANELBOARD SCHEDULES
F201	FLOOR PLAN - ADDITION FIRE ALARM PLAN
F203	FLOOR PLAN - ADDITION FIRE/LIFE SAFETY PLAN
F205	FLOOR PLAN - ADDITION FIRE SPRINKLER PLAN
K201	COMMUNICATIONS PLANS ADDITION FACILITY
K501	TELECOMMUNICATION ROOM #138 EQUIPMENT LAYOUT
K701	COMMUNICATIONS DETAILS ADDITION/ALTERATION FACILITY
K702	COMMUNICATIONS DETAILS ADDITION/ALTERATION FACILITY
K801	TELECOMMUNICATIONS SYSTEMS RISER DIAGRAMS CLINIC ADDITION

STANDARD DRAWINGS

(Attached to SPECIFICATION SECTION: TEMPORARY CONSTRUCTION FACILITIES)

Project Sign	150-52-1162
Sign Details	150-25-1232
Safety Sign	80-25-707
Hard Hat Sign	80-25-774

23. SAACONS 52.0236-4801 SALVAGE AND SCRAP GOVERNMENT PROPERTY (OCT 1993)

(a) "Government property" means all property owned by or leased to the Government or acquired by the Government under the terms of the contract. It includes both Government-furnished property and contractor-acquired property.

(b) "Salvage" means Government property in possession of a contractor, including subcontractors, that, because of its worn, damaged, deteriorated, or incomplete condition or specialized nature, has no reasonable prospect of sale or use as serviceable property without major repairs, but has some value in excess of its scrap value.

(c) "Scrap" means Government personal property that has no value except for its basic material content.

(d) In accordance with FAR 45.505-8 the Contractor shall maintain records of all scrap and salvage generated from this contract. The Contractor’s records shall contain the following information:

(1) Contract Number

(2) Description of salvageable items or classification (material content) of scrap

(3) Quantity on hand

(e) The Contractor shall provide final accounting and disposition recommendations of all Government property not consumed in performing this contract or delivered to the Government including salvage and scrap. The Government will review the Contractor’s records and shall cause correction if the Government disagrees with the classification of items as salvage or scrap. The Contractor shall dispose of the items as directed by the Contracting Officer. Items designated as scrap (agreed to by the Contracting Officer) shall be retained by the Contractor; its disposition shall be the responsibility of the Contractor. See Specification Section 01500, paragraph entitled "Scrap Material". Items designated as salvageable items (agreed to by the Contracting Officer) shall be turned over to the Government.

24. SAACONS 52.0236-4581 AVAILABILITY OF UTILITIES SERVICES (APR 1992)

All reasonably required amounts of water, electricity, and other utilities essential to contract performance will be made available to the contractor at no cost to the contractor from existing systems, outlets and supplies. All temporary connections, outlets and distribution lines, as may be required, shall be installed, maintained and removed by the Contractor at Contractor’s expense; removal shall be before final acceptance of the work by the Government. The Contractor shall carefully conserve any utilities furnished without charge. If it is determined that the construction contractor is wasteful of these utilities, the government may require discontinued use of the utilities or may require reimbursement and payment.

25. SAACONS 52.0236-4901 PARTNERING (MAR 1992)

The Government intends to encourage the foundation of a cohesive partnership with the Contractor and its subcontractors. This partnership will be structured to draw on the strengths of each organization to identify and achieve reciprocal goals. The objectives are effective and efficient contract performance and intended to achieve completion within budget, on schedule, and in accordance with plans and specifications. This partnership would be bilateral in makeup, and participation will be totally voluntary. Any costs associated with effectuating this partnership will be agreed to by both parties and will be shared equally with no change in contract price. To implement this partnership initiative it is anticipated that within 60 days of Notice to Proceed the Contractor’s on-site project manager and the Government’s Resident Engineer would attend a one or two-day partnership development seminar/team building workshop together with the Contractor’s key on-site staff and key Government personnel. Follow-up workshops of 1 or 2 days duration would be held periodically throughout the duration of the contract as agreed to by the Contractor and the Government.

END OF SECTION

ATTACHMENTS

ATTACHMENTS

1. GENERAL WAGE DECISION

2. DD FORM 2051, APPLICATION FOR COMMERCIAL AND GOVERNMENT ENTITY (CAGE) CODE - SEE SECTION 00100, DFARS 252.204-7001. COMPLETE SECTION B, BLOCKS 1 THROUGH 10, OF THE DD FORM 2051 AND RETURN WITH BID/COST PROPOSAL IF YOU DO NOT ALREADY HAVE A CAGE CODE.

   IF YOU HAVE BEEN AWARDED A DOD CONTRACT WITHIN THE PAST SEVERAL YEARS, THE OFFICE THAT MADE THE AWARD WILL PROBABLY HAVE YOUR CAGE CODE NUMBER IN THEIR DATA BASE. (SACRAMENTO DISTRICT WILL NOT HAVE INFORMATION ON LOS ANGELES DISTRICT AWARDS AND VICE VERSA.) IF YOU DO NOT KNOW YOUR CAGE CODE NUMBER, SUBMIT THE DD FORM 2051 WITH YOUR BID/PROPOSAL. PLEASE DO NOT SEND THE DD FORM 2051 AHEAD OF TIME. BE SURE THAT YOU USE A STREET ADDRESS FOR YOUR FIRM, NOT A POST OFFICE BOX.

   DO NOT UNDER ANY CIRCUMSTANCES DELAY SUBMITTING YOUR BID OR PROPOSAL WHILE ATTEMPTING TO OBTAIN A CAGE CODE NUMBER OR INFORMATION ON HOW TO COMPLETE THE DD FORM 2051. FAILURE TO FURNISH A CAGE CODE NUMBER OR THE FORM WILL NOT RENDER YOUR BID/PROPOSAL NONRESPONSIVE.

   IN ORDER TO FILL IN THE STANDARD INDUSTRIAL CLASSIFICATION (SIC) NUMBER AS REQUIRED BY THE DD FORM 2051, YOU WILL FIND THE SIC CODE FOR THIS SOLICITATION IN SECTION 00600, FAR 52.219-1. TO LIST OTHER SIC CODES YOUR FIRM IS ALSO IN THE BUSINESS TO PROVIDE, THE STANDARD INDUSTRIAL CLASSIFICATION MANUAL IS SOLD BY THE NATIONAL TECHNICAL INFORMATION SERVICE, 5285 PORT ROYAL ROAD, SPRINGFIELD, VIRGINIA 22161. THE ORDER NUMBER IS PB 87-100012.

3. PREAWARD SURVEY - SEE SECTION 00100, SAACONS 52.0209-4501. THE PREAWARD SURVEY IS ATTACHED FOR INFORMATION PURPOSES ONLY; IT WILL BE REQUIRED ONLY FROM THE LOW BIDDER AFTER BID OPENING IF THE LOW BIDDER HAS NOT HAD A CONTRACT WITH THE SACRAMENTO DISTRICT, CORPS OF ENGINEERS, IN THE LAST TWELVE-MONTH PERIOD. IT IS NOT REQUIRED AS PART OF THE BID PACKAGE.

4. SAMPLE SUBCONTRACTING PLAN - SEE SECTION 00100, SAACONS 52.0219-4581; SECTION 00700, FAR 52.219-9; SECTION 00800, SAACONS 52.0219-4509. THE SAMPLE SUBCONTRACTING PLAN IS ATTACHED FOR INFORMATION PURPOSES ONLY. A SUBCONTRACTING PLAN WILL BE REQUIRED ONLY FROM THE LOW BIDDER IF THE LOW BIDDER IS A LARGE BUSINESS AND THE LOW BID IS OVER $1 MILLION. A SUBCONTRACTING PLAN IS NOT REQUIRED FROM SMALL BUSINESSES. THE SUBCONTRACTING PLAN IS NOT REQUIRED FROM THE LOW BIDDER UNTIL AFTER THE BID OPENING; IT IS NOT REQUIRED AS PART OF THE BID PACKAGE.

General Decision Number UT970004
Superseded General Decision No. UT960004
State: Utah Construction Type:
BUILDING
County(ies):
DAVIS
BUILDING CONSTRUCTION PROJECTS (does not include residential construction consisting of single family homes and apartments up to and including 4 stories)

Modification Number	Publication Date
0	02/14/1997
1	04/04/1997
2	04/11/1997
3	09/05/1997

COUNTY(ies):

CARP0184F 07/01/1996

	Rates	Fringes
CARPENTERS (Including Acoustical Ceiling Installation and Drywall hanging)	16.00	3.00

CARP0722A 10/29/1995

	Rates	Fringes
MILLWRIGHTS	19.83	3.25

ELEC0354I 06/01/1994

	Rates	Fringes
ELECTRICIANS (Includes Low Voltage, Fiberoptic and Fire Alarm Installation)	18.14	3%+3.75

---

* IRON9927A 07/01/1996

	Rates	Fringes
IRONWORKERS:		
Reinforcing	15.67	6.41

LABO0295G 10/01/1995

	Rates	Fringes
LABORERS:		
Common	9.45	2.69

PLAS0568A 05/16/1994

	Rates	Fringes
CEMENT MASONS	12.85	2.30

PLUM0348A 01/01/1997

	Rates	Fringes
PLUMBERS & PIPEFITTERS (including HVAC work)	19.38	5.13

SFUT0669A 01/01/1995

	Rates	Fringes
SPRINKLER FITTERS	16.70	6.23

SHEE0312F 01/01/1997

	Rates	Fringes

SHEET METAL WORKERS (Including
Architect/Roofing and HVAC
Duct Work) 19.61 5.11

WELDERS - Receive rate prescribed for craft performing operation
to which welding is incidental.

==========

Unlisted classifications needed for work not included within
the scope of the classifications listed may be added after
award only as provided in the labor standards contract clauses
(29 CFR 5.5(a)(1)(v)).

In the listing above, the "SU" designation means that rates
listed under that identifier do not reflect collectively
bargained wage and fringe benefit rates. Other designations
indicate unions whose rates have been determined to be
prevailing.

WAGE DETERMINATION APPEALS PROCESS

1.) Has there been an initial decision in the matter? This can
be:

* an existing published wage determination
* a survey underlying a wage determination
* a Wage and Hour Division letter setting forth a
position on a wage determination matter
* a conformance (additional classification and rate)
ruling

On survey related matters, initial contact, including requests
for summaries of surveys, should be with the Wage and Hour
Regional Office for the area in which the survey was conducted
because those Regional Offices have responsibility for the
Davis-Bacon survey program. If the response from this initial
contact is not satisfactory, then the process described in 2.)
and 3.) should be followed.

With regard to any other matter not yet ripe for the formal
process described here, initial contact should be with the Branch
of Construction Wage Determinations. Write to:

Branch of Construction Wage Determinations
Wage and Hour Division
U. S. Department of Labor
200 Constitution Avenue, N. W.
Washington, D. C. 20210

2.) If the answer to the question in 1.) is yes, then an
interested party (those affected by the action) can request

review and reconsideration from the Wage and Hour Administrator (See 29 CFR Part 1.8 and 29 CFR Part 7). Write to:

Wage and Hour Administrator
U.S. Department of Labor
200 Constitution Avenue, N. W.
Washington, D. C. 20210

The request should be accompanied by a full statement of the interested party's position and by any information (wage payment data, project description, area practice material, etc.) that the requestor considers relevant to the issue.

3.) If the decision of the Administrator is not favorable, an interested party may appeal directly to the Administrative Review Board (formerly the Wage Appeals Board). Write to:

Administrative Review Board
U. S. Department of Labor
200 Constitution Avenue, N. W.
Washington, D. C. 20210

4.) All decisions by the Administrative Review Board are final.

END OF GENERAL DECISION

REQUEST FOR ASSIGNMENT OF A COMMERCIAL AND GOVERNMENT ENTITY (CAGE) CODE

(See Instructions on Reverse)

Form Approved
OMB No. 0704-0225
Expires May 31, 1990

SECTION A - TO BE COMPLETED BY INITIATOR

1. REQUESTING GOVERNMENT AGENCY / ACTIVITY

a. NAME: Activity Code: 369

b. ADDRESS (Street, City, State and Zip Code): Corps of Engineers, 1325 J Street, Rm 878, Sacramento, CA 95814-2922

2. TYPE CODE REQUESTED (X one)		3. EXCEPTION CODES
	a. TYPE A	a. CAO
X	b. TYPE F	b. ADP

4. INITIATOR

a. TYPED NAME (Last, First, Middle Initial)	b. OFFICE SYMBOL	c. SIGNATURE	d. TELEPHONE NO.
MILLER, RONALD J.	CESPK-CT	Ronald J Miller	(916) 557-5205

SECTION B - TO BE COMPLETED BY FIRM TO BE CODED

1. FIRM

DO NOT USE A P.O. BOX ADDRESS!!!

a. NAME (Include Branch of, Division of, etc.)

b. ADDRESS (Street, City, State and Zip Code)

c. CAGE CODE (If previously assigned)

2. IF FIRM PREVIOUSLY OPERATED UNDER OTHER NAME(S) OR OTHER ADDRESS(ES) SPECIFY THE PREVIOUS NAME(S) AND/OR ADDRESS(ES) *(Use separate sheet of paper, if necessary)*

3. PARENT COMPANY AND AFFILIATED FIRMS *(X one, and complete as applicable)*

- [ ] a. NONE
- [ ] b. CURRENTLY AFFILIATED WITH OTHER FIRMS *(List name(s) and address(es) of such firms on a separate sheet of paper)*
- [ ] c. PREVIOUSLY AFFILIATED WITH OTHER FIRMS *(List name(s) and address(es) of such firms on a separate sheet of paper)*

4. PRIMARY BUSINESS CATEGORY *(X one)*

- [ ] a. MANUFACTURER
- [ ] b. DEALER / DISTRIBUTOR
- [ ] c. CONSTRUCTION FIRM
- [ ] d. SERVICE COMPANY
- [ ] e. SALES OFFICE
- [ ] f. OTHER *(Specify)*

5. DISADVANTAGED SMALL BUSINESS STATUS *(X one)*

- [ ] a. APPROVED BY SMALL BUSINESS ADMINISTRATION (SBA) FOR SECTION 8(a) PROGRAM
- [ ] b. OTHER DISADVANTAGED SMALL BUSINESS FIRM
- [ ] c. NOT DISADVANTAGED SMALL BUSINESS FIRM

6. NUMBER OF EMPLOYEES

7. WOMAN OWNED BUSINESS *(X one)*

- [ ] a. YES
- [ ] b. NO

8. STANDARD INDUSTRIAL CLASSIFICATION (SIC) CODE(S)

a. PRIMARY

b. OTHER *(Specify)*

SOLICITATION NUMBER: DACA05-98-B-0010

CONTRACT SPECIALIST: RON DONEZ

10. FIRM OFFICIAL

a. TYPED NAME (Last, First, Middle Initial)	b. DATE SIGNED (YYMMDD)	c. SIGNATURE	d. TELEPHONE NO.

INSTRUCTIONS FOR COMPLETING DD FORM 2051

GENERAL NOTE FOR PERSONNEL PREPARING OR PROCESSING THIS REPORT

Coding must be as indicated in the instructions. In cases where specific coding instructions are provided, reference must be made to the Department of Defense Manual for Standard Data Elements, DoD 5000.12-M. Noncompliance with either the coding instructions contained herein or those published in referenced manual will make the organization which fails to comply responsible for required concessions in data base communication.

SPECIFIC INSTRUCTIONS

SECTION A - TO BE COMPLETED BY THE INITIATING GOVERNMENT ACTIVITY

Item 1: Self-explanatory.

Item 2: Mark the type of code being requested.

a. Type A - Manufacturers Code which is used in the Federal Catalog System to identify a certain facility at a specific location which is a possible source for the manufacture and/or design control of items cataloged by the Federal Government; or,

b. Type F - Non-manufacturers Code which is required for identifying an organization/ function in MILSCAP. These are assigned to contractors which are non-manufacturers or are manufacturers not qualifying for a Type A Code.

Item 3: If applicable, enter the exception DoD Activity Address Code for the Servicing Contract Administration Office (CAO) or ADP point.

Item 4: Self-explanatory.

SECTION B - TO BE COMPLETED BY THE FIRM TO WHICH THE CODE WILL BE ASSIGNED

Items 1a and 1b: Self-explanatory.

Item 1c: If a CAGE Code (Type A or Type F) was previously assigned, enter it in this block.

Item 2: Self-explanatory.

Item 3: If a block other than "None" is marked, identify the Parent company by a (P) beside the firm name.

SECTION B - *(Continued)*

Item 4: Self-explanatory.

Item 5: A disadvantaged business firm is defined as a firm that is 51%, or more, owned, controlled, and operated by a person(s) who is socially and economically disadvantaged. "Controlled" is defined as exercising the power to make policy decisions. "Operated" is defined as actively involved in the day-to-day management of the firm.

Item 6: Enter the number of employees. This number should include the employees of all affiliates.

Item 7: A woman-owned business is defined as a firm that is 51%, or more, owned, controlled, and operated by a woman or women. "Controlled" and "Operated" are as defined in Item 5.

Item 8: The SIC Code is a Government Index used to identify business activity and indicates the function (manufacturer, wholesaler, retailer, or service) and the line of business in which the company is engaged. If multiple SIC Codes, indicate the primary first, next important, etc.

Items 9 and 10: Self-explanatory.

NOTE: When any future changes are made to the coded facility; i.e., name change, location change, business sold or operations discontinued, etc., written notification stating the appropriate change should be sent to:

Commander
Defense Logistics Services Center
ATTN: DLSC-SBB
Federal Center
74 North Washington
Battle Creek, MI 49017-3084
(616) 961-4358 FAX (616) 961-4265

☆U.S. Government Printing Office: 1989-242-450/90225

PREAWARD SURVEY OF PROSPECTIVE CONTRACTORS
CONSTRUCTION CONTRACTS

It is the general policy of the Department of Defense that contracts shall be awarded only to contractors determined to be responsible in accordance with Part 9 of the Federal Acquisition Regulation (FAR).

No contract shall be awarded to any person or firm unless the Contracting Officer first makes an affirmative determination that the prospective contractor is responsible within the meaning of the FAR, Part 9.

Before making a determination of responsibility, the Contracting Officer shall have in his/her possession or obtain information sufficient to satisfy himself/herself that a prospective contractor currently meets the minimum FAR Part 9 standards.

In order to make the required determination and also to expedite the contract award, the following information must be submitted by the Contractor as directed (see Section 00100, SAACONS 52.0209-4501):

A. COMPLETED CONTRACTOR EXPERIENCE DATA FORM WITH SUPPLEMENTAL SCHEDULES A-D (ATTACHED).

B. LATEST FINANCIAL STATEMENTS. IF THE FINANCIAL STATEMENT IS MORE THAN 60 DAYS OLD, SUBMIT A CERTIFICATE STATING THAT THE FIRM’S FINANCIAL CONDITION IS SUBSTANTIALLY THE SAME, OR, IF NOT THE SAME, STATE THE CHANGES THAT HAVE TAKEN PLACE.

C. PROVIDE LETTERS FROM BANKS OR OTHER FINANCIAL INSTITUTIONS WITH WHICH THE CONTRACTOR CONDUCTS BUSINESS. THE LETTERS SHOULD CONTAIN INFORMATION ABOUT YOUR FIRM’S ACCOUNTS, LOANS, LINES OF CREDIT, ETC., PROVIDING INFORMATION LEADING TO A DETERMINATION THAT YOUR FIRM IS "RESPONSIBILE" AS DEFINED IN THE FEDERAL ACQUISITION REGULATION, PART 9, "HAS THE FINANCIAL RESOURCES TO PERFORM THE CONTRACT OR THE ABILITY TO OBTAIN THEM". THE GOVT IS INTERESTED IN FINANCIAL STABILITY, TIMELY PAYMENTS, THE LENGTH AND NATURE OF THE RELATIONSHIP BETWEEN THE FIRM AND THE FINANCIAL INSTITUTION, ETC. WHICH REVEALS THE FIRM’S FINANCIAL ABILITY TO PERFORM THE CONTRACT. THE LETTERS SHOULD ALSO PROVIDE THE NAME AND TELEPHONE NUMBER OF THE BANK REPRESENTATIVE THE GOVERNMENT MAY CONTACT.

BE SURE TO INCLUDE IN YOUR PREAWARD SURVEY, INFORMATION ON ANY CONTRACTS YOU HAVE HAD WITH THE SACRAMENTO DISTRICT OR LOS ANGELES DISTRICT, CORPS OF ENGINEERS, WITHIN THE LAST 12 MONTHS.

THESE DOCUMENTS SHALL BE TREATED BY THE GOVERNMENT AS CONFIDENTIAL.

CONSTRUCTION CONTRACTOR EXPERIENCE DATA

DATE (Day, Month, Year)

1. FIRM NAME

2. MAIN OFFICE ADDRESS (Street, City, State and Telephone)

3. BRANCH OFFICES

4. SERVICES RENDERED

☐ CONSTRUCTION

☐ DESIGN ☐ CONSULTANT

5. ORGANIZATION

☐ INDIVIDUAL ☐ JOINT VENTURE

☐ PARTNERSHIP ☐ CORPORATION

6. DATE ORGANIZED

7. DATE INCORPORATED AND STATE

8. NAMES OF OFFICERS AND OTHER KEY PERSONNEL

I – PRESENT PAYROLL PERSONNEL (List Number of Each Category Below)

PARTNERS	OFFICERS	OTHER KEY	REMAINDER	TOTAL	SUBTOTAL PERMANENT	MAXIMUM PERSONNEL AT ANY TIME
						DATE _____

II – EQUIPMENT OWNED

PRESENT VALUE ($)	ACQUISITION COST ($)

III – FINANCIAL DATA AS OF (Date) _____

CURRENT ASSETS	CURRENT LIABILITIES	NET WORTH

IV – TOTAL CONTRACT VALUE OF CONSTRUCTION AND DEMOLITION IN PAST SIX YEARS EXCLUSIVE OF JOINT VENTURE

19	$
19	$
19	$
19	$
19	$
19	$
AVERAGE ANNUAL $ INCOME	

LARGEST JOB IN PAST SIX YEARS

CONTRACT AMOUNT	DATE

DESCRIPTION

OWNER

V – LARGEST JOB EVER CONTRACTED (If Other Than In Past Six Years)

CONTRACT AMOUNT	DATE

DESCRIPTION

OWNER

VI – TYPE OF WORK IN WHICH FIRM SPECIALIZES

VII – TYPE OF WORK AND ACCEPTABLE LOCATIONS FOR WHICH FIRM DESIRES TO BE CONSIDERED

VIII – COST-REIMBURSEMENT TYPE CONTRACTS

AGENCY OR OWNER	DATE	DESCRIPTION	AMOUNT

TYPED NAME AND POSITION OR TITLE OF PERSON SIGNING

SIGNATURE

NOTE: Use reverse side for remarks, explanations, or detailed description of items reported above.

SCHEDULE A

CONSTRUCTION CONTRACTOR EXPERIENCE DATA

EXISTING COMMITMENTS: (List below the construction projects your firm has under way on this date, including those on which you are presently low bidder but have not received an award.)

CONTRACT NUMBER AND AMOUNT	DESCRIPTION OF WORK	FOR WHOM PERFORMED*	PERCENT COMPLETE	PERCENT SUBLET

* PROVIDE NAME OF ORGANIZATION, POINT OF CONTACT AND TELEPHONE NUMBER FOR CONTACT.

SCHEDULE B

CONSTRUCTION CONTRACTOR EXPERIENCE DATA

EXPERIENCE DATA: (List below the principal construction projects your firm has completed within the past six (6) years.)

CONTRACT NO.	AMOUNT	DESCRIPTION/LOCATION	CONTACT PERSON/PHONE NO	PERCENT SUBLET

SCHEDULE C

CONSTRUCTION CONTRACTOR EXPERIENCE DATA

CONSTRUCTION AND/OR TECHNICAL EQUIPMENT: (List total equipment and facilities owned for performing the work and present status as to whether or not it is committed to existing contracts.)

QUANTITY	DESCRIPTION	CONDITION	YEARS OF SERVICE	PRESENT STATUS

SCHEDULE D

CONSTRUCTION CONTRACTOR EXPERIENCE DATA

TO BE COMPLETED IF PROPOSED MILITARY CONSTRUCTION CONTRACT EXCEEDS $1,000,000.

A. Each contract awarded within the preceding three-month period exceeding $1,000,000 in value with brief description of the contract:

B. Each contract awarded within the preceding three-year period not already physically completed and exceeding $5,000,000 in value with brief description of the contract:

- S A M P L E -

SUBCONTRACTING PLAN

SUBCONTRACTING PLAN SUBMITTED IN ACCORDANCE WITH PUBLIC LAW 95-507 (THE FOLLOWING FORMAT IS ESTABLISHED IN ACCORDANCE WITH FAR 52.219-9(d)(1) THROUGH (d)(11) AND INCLUDES THE REQUIRED STATUTORY ELEMENTS AS DESCRIBED IN FAR 19.704. IT ALSO INCLUDES ADDITIONAL REQUIREMENTS OF THE DFARS 219.704 AND AFARS 219.704. EVALUATION OF THE SUBCONTRACTING PLAN BY THE GOVERNMENT WILL BE AS PRESCRIBED IN FAR (AND ITS SUPPLEMENTS) 19.705.

DO NOT JUST ADDRESS THE FOLLOWING ISSUES IN SHORT; FOLLOW THE GUIDANCE OF FAR 52.219-9 IN ITS ENTIRETY. FOR EXAMPLE, PARAGRAPH 11 BELOW ASKS FOR A DISCUSSION OF RECORDS; THE PLAN SHOULD ADDRESS ALL RECORDS AS DESCRIBED IN FAR 52.219-9(d)(11)(i) THROUGH (vi).

IN ACCORDANCE WITH FAR 19.704 IF THE CONTRACT CONTAINS OPTIONS, THE CUMULATIVE VALUE OF THE BASIC CONTRACT AND ALL OPTIONS IS CONSIDERED IN DETERMINING WHETHER A SUBCONTRACTING PLAN IS NECESSARY. ONCE IT HAS BEEN DECIDED IF A PLAN IS NECESSARY, THE SUBCONTRACTING PLAN SHALL CONTAIN SEPARATE PARTS, ONE FOR THE BASIC CONTRACT AND ONE FOR EACH OPTION. *IN OTHER WORDS, IT IS NECESSARY TO ADDRESS PLANNED SUBCONTRACTING DOLLARS AND PERCENTAGES OF TOTAL TO BE AWARDED TO SMALL; SMALL, DISADVANTAGED; WOMEN-OWNED SMALL; HBCU/MIs; AND QUALIFIED NONPROFIT AGENCIES FOR THE BLIND AND OTHER SEVERELY DISABLED SEPARATELY FOR THE BASIC CONTRACT PERIOD AND EACH OPTION YEAR. THEREFORE, PARAGRAPHS 1 AND 2 BELOW MUST BE PREPARED SEPARATELY FOR THE BASE YEAR AND EACH OPTION YEAR. ALL OTHER PARTS OF THE SUBCONTRACTING PLAN ONLY NEED TO BE ADDRESSED ONCE.*

IF THE SUBCONTRACTING PLAN'S PROPOSED SUBCONTRACTING GOALS DO NOT MEET THE CORPS OF ENGINEERS' MINIMUM SUBCONTRACTING GOALS, THE SUBCONTRACTING PLAN MUST BE SUBMITTED WITH A FULL EXPLANATION OF THE REASONS FOR THE LESSER GOALS ESTABLISHED BY THE PLAN. A SMALL DISADVANTAGED BUSINESS GOAL OF LESS THAN FIVE PERCENT MUST BE APPROVED TWO LEVELS ABOVE THE CONTRACTING OFFICER (DFARS 219.705-4).

PROJECT TITLE: _____

RFP/IFB NO.: _____ CONTRACT NO.: _____

CONTRACTOR NAME: _____

DIVISION: _____

INDIVIDUAL COMPLETING THIS PLAN: _____

TELEPHONE NO.: _____

1. Goals, expressed in terms of percentages of total planned subcontracting dollars, for the use of small business concerns; small, disadvantaged business concerns; women-owned small business concerns; historically black colleges and universities (HBCUs) and minority institutions (MIs); and qualified nonprofit agencies for the blind and other severely disabled as subcontractors. The offeror shall include all subcontracts that contribute to contract performance and may include a proportionate share of products and services that are normally allocated as indirect costs.

Percentage Goals:		Corps of Engineers Minimum Subcontracting Goals
Small Business	_____%	55.0%
Small, Disadvantaged Business	_____%	8.5%
Women-Owned Small Business	_____%	3.0%
HBCUs and MIs	_____%	
Qualified Nonprofit Agencies for the Blind and Other Severely Disabled	_____%	

2. Statement of: (i) total dollars planned to be subcontracted, (ii) total dollars planned to be subcontracted to small business; (iii) total dollars planned to be subcontracted to small, disadvantaged business; (iv) total dollars planned to be subcontracted to women-owned small business; (v) total dollars planned to be subcontracted to HBCUs and MIs; and (vi) total dollars planned to be subcontracted to qualified nonprofit agencies for the blind and other severely disabled.

Total Cost of Prime Contract:	$_____	
Total Dollars to be Subcontracted	$_____	_____%*
To Small Business	$_____	_____%**
To Small, Disadvantaged Business	$_____	_____%**
To Women-Owned Small Business	$_____	_____%**
To HBCUs and MIs	$_____	_____%**
To Qualified Nonprofit Agencies for the Blind and Other Severely Disabled	$_____	_____%**

NOTES: * Calculate percentage of Total Dollars to be Subcontracted to Total Cost of Prime Contract

** Calculate subcontracted dollars to each group to Total Dollars to be Subcontracted, NOT TO Total Cost of Prime Contract.

PLANNED SUBCONTRACTING INCLUDES ALL PLANNED EXPENDITURES. TOTAL ESTIMATED COST TO SUBCONTRACTORS AND GOALS MUST BE ESTABLISHED EVEN IF THE CONTRACT IS OF THE INDEFINITE-DELIVERY TYPE.

SUBCONTRACTS AWARDED TO SMALL, DISADVANTAGED BUSINESSES; WOMEN-OWNED SMALL BUSINESSES; HBCU/MIs; AND QUALIFIED NONPROFIT AGENCIES FOR THE BLIND AND OTHER SEVERELY DISABLED COUNT TOWARD THE OVERALL SMALL BUSINESS GOAL. HBCU/MIs ARE COUNTED AS A SUBSET OF THE SMALL, DISADVANTAGED GOAL. THE CORPS OF ENGINEERS HAS NOT BEEN ASSIGNED A SET GOAL FOR HBCU/MIs OR QUALIFIED NONPROFIT AGENCIES FOR THE BLIND AND OTHER SEVERELY DISABLED.

IN ACCORDANCE WITH DFARS 219.703, QUALIFIED NONPROFIT AGENCIES FOR THE BLIND AND OTHER SEVERELY DISABLED THAT HAVE BEEN APPROVED BY THE COMMITTEE FOR PURCHASE FROM PEOPLE WHO ARE BLIND OR SEVERELY DISABLED UNDER THE JAVITS-WARNER-O'DAY (41 U.S.C. 46-48) ARE ELIGIBLE THROUGH SEPTEMBER 30, 1997, TO PARTICIPATE IN THE PROGRAM.

3. A description of the principal supply and service areas to be subcontracted and an identification of the types planned for subcontracting to (i) small business subcontractors, (ii) small, disadvantaged business subcontractors, (iii) women-owned small business subcontractors, (iv) HBCUs and MIs, (v) qualified nonprofit agencies for the blind and other severely disabled:

4. A statement of the method used in developing the proposed subcontracting goals for small business concerns; small, disadvantaged business concerns; women-owned small business concerns; HBCUs and MIs; and qualified nonprofit agencies for the blind and other severely disabled:

5. Description of the method used to identify potential sources for solicitation purposes to assure small; small, disadvantaged, women-owned small; HBCU and MI; and qualified nonprofit agencies for the blind and other severely disabled participation (e.g., existing company source lists, the Procurement Automated Source System (PASS) of the Small Business Administration, the National Minority Purchasing Council Vendor Information Service, the Research and Information Division of the Minority Business Development Agency in the Department of Commerce, or small; small, disadvantaged, women-owned small, HBCU or MI, or qualified nonprofit agencies for the blind and other severely disabled concerns trade associations):

6. A statement as to whether or not the offeror included indirect costs in establishing the subcontracting goals, and if so, a description of the method used to determine the proportionate share of indirect costs to be incurred with: (i) small business concerns; (ii) small, disadvantaged business concerns; (iii) women-owned small business concerns; (iv) HBCUs and MIs); and (v) qualified nonprofit agencies for the blind and other severely disabled:

7. The name of the individual employed by the offeror who will administer the offeror's subcontracting program and a description of the duties of the individual.

Name: _____

Title and Telephone Number: _____

Address: _____

City, State and Zip Code: _____

Duties (Attachment may be used):

8. Describe the efforts the offeror will make to assure that small business concerns; small, disadvantaged business concerns; women-owned small business concerns; HBCUs and MIs; and qualified nonprofit agencies for the blind and other severely disabled will have an equitable opportunity to complete for subcontractors under this contract:

9. I do herewith assure that this concern will include the clause at FAR 52.219-8 entitled "Utilization of Small, Small Disadvantaged and Women-Owned Small Business Concerns" in all subcontracts which offer further subcontracting opportunities and will require all subcontractors (except small business concerns) who receive subcontracts in excess of $500,000 (or, in the case of a contract for construction of any public facility, $1 million) to adopt a plan similar to the plan agreed to by this concern and in consonance with the FAR clause 52.219-9.

10. I also assure that this concern will (i) cooperate in any studies or surveys as may be required, (ii) submit periodic reports in order to allow the Government to determine the extent of compliance by the offeror with the subcontracting plan, and (iii) submit Standard Form (SF) 294, Subcontracting Report for Individual Contracts, and SF 295, Summary Subcontract Report, in accordance with the instructions of the forms, and (iv) ensure that the subcontractors under this contract agree to submit the required SF 294s and 295s. I assure that this concern will submit an SF 295 on Corps of Engineers projects only. The SF 295 shall be completed and distributed in accordance with the Corps of Engineers supplemental instructions. I will not report Corps of Engineers projects through any other agency unless authorized by the Contracting Officer.

11. Provide a recitation of the types of records the offeror will maintain to demonstrate procedures which have been adopted to comply with the requirements and goals set forth in the plan, including the establishment of source lists; and a description of its efforts to locate small business concerns; small, disadvantaged business concerns; women-owned small business concerns; HBCUs and MIs; and qualified nonprofit agencies for the blind and other severely disabled and award subcontracts to them. The records shall include at least the following (on a plant-wide or company-wide basis, unless otherwise indicated):

a. Source lists (e.g., PASS), guides, and other data that identify small business concerns; small, disadvantaged business concerns; women-owned small business concerns; HBCUs and MIs; and qualified nonprofit agencies for the blind and other severely disabled.

b. Organizations contacted in an attempt to locate sources that are small; small disadvantaged; women-owned small business concerns, HBCUs and

MIs; and qualified nonprofit agencies for the blind and other severely disabled.

c. Records on each subcontract solicitation resulting in an award of more than $100,000, indicating (A) whether small business concerns were solicited and if not, why not, (B) whether small disadvantaged business concerns were solicited and if not, why not, (C) whether women-owned small business concerns were solicited and if not, why not, (D) whether HBCUs and MIs were solicited and if not, why not, (E) whether qualified nonprofit agencies for the blind and other severely disabled were solicited and if not, why not, and (F) if applicable, the reason award was not made to a small business concern.

d. Records of any outreach efforts to contact (A) trade associations, (B) business development organizations, and (C) conferences and trade fairs to locate small; small disadvantaged; women-owned small business sources; HBCUs and MIs; and qualified nonprofit agencies for the blind and other severely disabled.

e. Records of internal guidance and encouragement provided to buyers through (A) workshops, seminars, training, etc., and (B) monitoring performance to evaluate compliance with the programs’s requirements.

f. On a contract-by-contract basis, records to support award data submitted by the offeror to the Government, including the name, address, and business size of each subcontractor. Contractors having company or division-wide annual plans need not comply with this requirement.

12. Discuss the extent to which the offeror has historically been successful in complying with the requirements of the clauses at FAR 52.219-8, Utilization of Small, Small Disadvantaged and Women-Owned Small Business Concerns, and 52.219-9, Small, Small Disadvantaged and Women-Owned Small Business Subcontracting Plan, in establishing realistic yet challenging goals and show evidence of ability to achieve the goals. Information addressing past performance on DoD contracts evidencing achievement of established subcontracting goals will be in the form of Standard Forms 294 and 295 (attach these to this plan). Offerors who have had no prior Department of Defense contracts from which to assess past performance will not be penalized. Those who have had prior DoD contracts must provide the SF 294s and 295s on past DoD contracts.

_____
(Signature)

_____
(Title of Corporate Officer)

TECHNICAL SPECIFICATIONS

TABLE OF CONTENTS

TECHNICAL SPECIFICATIONS

SECTION	TITLE
	DIVISION 1 - GENERAL REQUIREMENTS
01090	SOURCES FOR REFERENCE PUBLICATIONS
01130	ENVIRONMENTAL PROTECTION
01330	SUBMITTAL PROCEDURES
01311	NETWORK ANALYSIS SYSTEM
01415	METRIC MEASUREMENT
01440	CONTRACTOR QUALITY CONTROL
01500	TEMPORARY CONSTRUCTION FACILITIES
	DIVISION 2 - SITE WORK
02050	DEMOLITION
02210	GRADING
02221	EXCAVATION, FILLING AND BACKFILLING FOR BUILDINGS
02222	EXCAVATION, TRENCHING AND BACKFILLING FOR UTILITIES SYSTEMS
02285	SOIL TREATMENT FOR SUBTERRANEAN TERMITE CONTROL
02511	CONCRETE SIDEWALKS
02660	WATER LINES
02685	GAS DISTRIBUTION SYSTEM
02720	STORM-DRAINAGE SYSTEM
02730	SANITARY SEWERS
02811	IRRIGATION SYSTEMS
02870	SITE FURNISHINGS
02935	TURF
02950	TREES, SHRUBS, AND GROUND COVERS
	DIVISION 3 - CONCRETE
03100	STRUCTURAL CONCRETE FORMWORK
03200	CONCRETE REINFORCEMENT
03250	EXPANSION JOINTS, CONTRACTION JOINTS AND WATERSTOPS
03300	CAST-IN-PLACE STRUCTURAL CONCRETE
03450	PRECAST ARCHITECTURAL CONCRETE
	DIVISION 4 - MASONRY
04200	MASONRY
	DIVISION 5 - METALS
05120	STRUCTURAL STEEL
05210	STEEL JOISTS
05300	STEEL DECKING
05400	COLD-FORMED METAL FRAMING
05500	MISCELLANEOUS METAL
	DIVISION 6 - WOOD AND PLASTICS
06100	ROUGH CARPENTRY
06200	FINISH CARPENTRY
06410	PLASTIC LAMINATED FACED CABINETS AND ACCESSORIES

DIVISION 7 - THERMAL AND MOISTURE PROTECTION

07160	BITUMINOUS DAMPPROOFING
07212	MINERAL FIBER BLANKET THERMAL INSULATION
07220	ROOF INSULATION
07250	SPRAY-APPLIED FIREPROOFING
07270	FIRESTOPPING
07535	MODIFIED BITUMEN ROOFING
07600	SHEET METALWORK, GENERAL
07920	JOINT SEALING

DIVISION 8 - DOORS AND WINDOWS

08110	STEEL DOORS AND FRAMES
08120	ALUMINUM DOORS AND FRAMES
08201	WOOD DOORS
08353	OPERABLE PARTITIONS
08700	BUILDERS' HARDWARE
08810	GLASS AND GLAZING
08900	INSULATED TRANSLUCENT PANEL SYSTEM

DIVISION 9 - FINISHES

09200	LATHING AND PLASTERING
09214	PREFABRICATED GLASS REINFORCED CEMENT MEMBERS
09250	GYPSUM WALLBOARD
09310	CERAMIC TILE
09510	ACOUSTICAL TREATMENT
09650	RESILIENT FLOORING
09680	CARPET
09836	MULTI-COLOR COATING
09900	PAINTING, GENERAL
09950	WALL COVERINGS

DIVISION 10 - SPECIALTIES

10100	MISCELLANEOUS ITEMS
10160	TOILET PARTITIONS
10260	CORNER GUARDS
10430	EXTERIOR SIGNAGE
10440	INTERIOR SIGNAGE
10505	STEEL CLOTHING LOCKERS
10800	TOILET ACCESSORIES

DIVISION 11 - EQUIPMENT

11700	GENERAL REQUIREMENTS FOR MEDICAL EQUIPMENT
11702	MEDICAL EQUIPMENT, MISCELLANEOUS

DIVISION 12 - FURNISHINGS

12335	CASEWORK FOR MEDICAL AND DENTAL EQUIPMENT
12540	WINDOW BLINDS
12690	ENTRY FLOOR MAT

DIVISION 13 - SPECIAL CONSTRUCTION

13080	SEISMIC PROTECTION FOR MECHANICAL, ELECTRICAL EQUIPMENT

DIVISION 14 - CONVEYING SYSTEMS

(NOT APPLICABLE)

DIVISION 15 - MECHANICAL

15250	THERMAL INSULATION FOR MECHANICAL SYSTEMS
15330	WET PIPE SPRINKLER SYSTEM, FIRE PROTECTION
15405	PLUMBING, HOSPITAL
15488	GAS PIPING SYSTEMS
15569	WATER AND STEAM HEATING; OIL, GAS OR BOTH; UP TO 20 MBTUH
15650	CENTRAL REFRIGERATED AIR-CONDITIONING SYSTEM
15895	AIR SUPPLY, DISTRIBUTION, VENTILATION, AND EXHAUST SYSTEM
15950	HEATING, VENTILATING AND AIR CONDITIONING HVAC CONTROL SYSTEMS
15990	TESTING, ADJUSTING AND BALANCING OF HVAC SYSTEMS
15995	COMMISSIONING OF HVAC SYSTEMS

DIVISION 16 - ELECTRICAL

16375	ELECTRICAL DISTRIBUTION SYSTEM, UNDERGROUND
16415	ELECTRICAL WORK, INTERIOR
16721	FIRE DETECTION AND ALARM SYSTEM
16741	TELEPHONE SYSTEM, INSIDE PLANT
16742	TELEPHONE SYSTEM, OUTSIDE PLANT
16750	TONE/VISUAL NURSE CALL SYSTEMS
16770	PUBLIC ADDRESS AND PROGRAM DISTRIBUTION SYSTEMS

REPORT OF FINDINGS

SECTION TABLE OF CONTENTS

DIVISION 01 - GENERAL REQUIREMENTS

SECTION 01090

SOURCES FOR REFERENCE PUBLICATIONS

03/97

PART 1 GENERAL

1.1 REFERENCES
1.2 ORDERING INFORMATION

-- End of Section Table of Contents --

SECTION 01090

SOURCES FOR REFERENCE PUBLICATIONS
03/97

PART 1 GENERAL

1.1 REFERENCES

Various publications are referenced in other sections of the specifications to establish requirements for the work. These references are identified in each section by document number, date and title. The document number used in the citation is the number assigned by the sponsoring organization, e.g. UL 1 (1993; Rev thru Jan 1995) Flexible Metal Conduit. However, when the sponsoring organization has not assigned a number to a document, an identifying number has been assigned for convenience, e.g. UL's unnumbered 1995 edition of their Building Materials Directory is identified as UL-01 (1995) Building Materials Directory. The sponsoring organization number (UL 1) can be distinguished from an assigned identifying number (UL-01) by the lack of a dash mark (-) in the sponsoring organization assigned number.

1.2 ORDERING INFORMATION

The addresses of the organizations whose publications are referenced in other sections of these specifications are listed below, and if the source of the publications is different from the address of the sponsoring organization, that information is also provided. Documents listed in the specifications with numbers which were not assigned by the sponsoring organization should be ordered from the source by title rather than by number.

ACI INTERNATIONAL (ACI)

P.O. Box 9094
Farmington Hills, MI 48333-9094
Ph: 810-848-3800
Fax: 810-848-3801
Internet: http://www.aci-int.inter.net

AIR CONDITIONING AND REFRIGERATION INSTITUTE (ARI)

4301 North Fairfax Dr., Suite 425
ATTN: Pubs Dept.
Arlington, VA 22203
Ph: 703-524-8800
Fax: 703-528-3816
E-mail: ari@dgsys.com

AIR DIFFUSION COUNCIL (ADC)

ll S. LaSalle St., Suite 1400
Chicago, IL 60603
Ph: 312-201-0101

Fax: 312-201-0214

AIR MOVEMENT AND CONTROL ASSOCIATION (AMCA)

30 W. University Dr.
Arlington Heights, IL 60004-1893
Ph: 708-394-0404
Fax: 708-253-0088

ALUMINUM ASSOCIATION (AA)

Pubs Department
P.O. Box 753
Waldorf, MD 20604
Ph: 301-645-0756
Fax: 301-843-0159

AMERICAN ARCHITECTURAL MANUFACTURERS ASSOCIATION (AAMA)

1827 Walden Ofc. Sq.
Suite 104
Schaumburg, IL 60173-4268
Ph: 847-303-5664
Fax: 847-303-5774
Internet: www.aamanet.org

AMERICAN ASSOCIATION OF NURSERYMEN (AAN)

1250 I St., NW, Suite 500
Washington, DC 20005
Ph: 888-227-4860 or 202-789-2900
FAX: 202-789-1893

AMERICAN ASSOCIATION OF STATE HIGHWAY AND TRANSPORTATION OFFICIALS (AASHTO)

444 N. Capital St., NW, Suite 249
Washington, DC 20001
Ph: 888-227-4860 or 202-624-5800
Fax: 202-624-5806

AMERICAN ASSOCIATION OF TEXTILE CHEMISTS AND COLORISTS (AATCC)

P.O. Box 12215
Research Triangle Park, NC 27709-2215
Ph: 919-549-8141
Fax: 919-549-8933

AMERICAN BEARING MANUFACTURERS ASSOCIATION (ABEMA)

1200 19th Street, NW, Suite 300
Washington, DC 20036-4303
Ph: 202-429-5155

Fax: 202-223-4579

AMERICAN CONFERENCE OF GOVERNMENTAL INDUSTRIAL HYGIENISTS (ACGIH)

1330 Kemper Meadow Dr.
Cincinnati, OH 45240
Ph: 513-742-2020
Fax: 513-742-3355

AMERICAN GAS ASSOCIATION (AGA)

1515 Wilson Blvd.
Arlington, VA 22209
Ph: 703-841-8556
Fax: 703-841-8406

AMERICAN HARDBOARD ASSOCIATION (AHA)

1210 W. Northwest Highway
Palatine, IL 60067
Ph: 708-934-8800
Fax: 708-934-8803

AMERICAN INSTITUTE OF STEEL CONSTRUCTION (AISC)

One E. Wacker Dr., Suite 3100
Chicago, IL 60601-2001
Ph: 312-670-2400
Or 800-644-2400
Fax: 312-670-5403
Internet: http://www.aiscweb.com

AMERICAN INSTITUTE OF TIMBER CONSTRUCTION (AITC)

7012 So. Revere Parkway, Suite 140
Englewood, CO 80112
Ph: 303-792-9559
Fax: 303-792-0669

AMERICAN IRON AND STEEL INSTITUTE (AISI)

ATTN: Publication Orders
P.O. Box 4321
Chestertown, MD 21690
Ph: 800-277-3850
Fax: 410-810-0910

AMERICAN NATIONAL STANDARDS INSTITUTE (ANSI)

11 West 42nd St
New York, NY 10036
Ph: 212-642-4900
Fax: 212-302-1286
Internet: http://www.ansi.org/

AMERICAN PETROLEUM INSTITUTE (API)

1220 L St., NW
Washington, DC 20005
Ph: 202-682-8375
Fax: 202-962-4776

AMERICAN SOCIETY FOR TESTING AND MATERIALS (ASTM)

100 Barr Harbor Drive
West Conshohocken, PA 19428-2959
Ph: 610-832-9585
Fax: 610-832-9555
E-mail: cservice@astm.org

AMERICAN SOCIETY OF HEATING, REFRIGERATING AND AIR-CONDITIONING ENGINEERS (ASHRAE)

1791 Tullie Cir., NE
Atlanta, GA 30329-2305
Ph: 800-527-4723 or 404-636-8400
Fax: 404-321-5478

AMERICAN SOCIETY OF MECHANICAL ENGINEERS (ASME)

22 Law Dr., Box 2300
Fairfield, NJ 07007-2900
Ph: 800-843-2763
Fax: 201-882-1717

AMERICAN SOCIETY OF SANITARY ENGINEERING (ASSE)

P.O. Box 40362
Bay Village, OH 44140
Ph: 216-835-3040
Fax: 216-835-3488
E-mail: asse@ix.netcom.com

AMERICAN WATER WORKS ASSOCIATION (AWWA)

6666 West Quincy
Denver, CO 80235
Ph: 800-926-7337

Fax: 303-795-1989

AMERICAN WELDING SOCIETY (AWS)

550 N.W. LeJeune Road
Miami, FL 33126
Ph: 305-443-9353
Fax: 305-443-7559

AMERICAN WOOD-PRESERVERS' ASSOCIATION (AWPA)

3246 Fall Creek Highway, Suite 1900
Grandbury, TX 76049-7979
Ph: 817-326-6300
Fax: 817-326-6306

ASBESTOS CEMENT PIPE PRODUCERS ASSOCIATION (ACPPA)

1745 Jefferson Davis Highway, Suite 406
Arlington, VA 22202
Ph: 703-412-1153
Fax: 703-412-1152

ASSOCIATED AIR BALANCE COUNCIL (AABC)

1518 K St., NW
Washington, DC 20005
Ph: 202-737-0202
Fax: 202-638-4833

BUILDERS HARDWARE MANUFACTURERS ASSOCIATION (BHMA)

355 Lexington Ave. New York, NY 10017-6603
Ph: 212-661-4261
FAX: 212-370-9047

CALIFORNIA REDWOOD ASSOCIATION (CRA)

405 Enfrente Ave., Suite 200
Novato, CA 94949
Ph: 415-382-0662
Fax: 415-382-8531

CARPET AND RUG INSTITUTE (CRI)

310 Holiday Ave.
P.O. Box 2048
Dalton, GA 30722-2048
Ph: 706-278-0232

CAST IRON SOIL PIPE INSTITUTE (CISPI)

5959 Shallowford Rd., Suite 419
Chattanooga, TN 37421
Ph: 615-892-0137
Fax: 615-892-0817

CODE OF FEDERAL REGULATIONS (CFR)

Order from:
Government Printing Office
Washington, DC 20402
Ph: 202-512-1800
Fax: 202-275-7703
Internet: http://www.pls.com:8001/his/cfr.html

COMMERCIAL ITEM DESCRIPTIONS (CID)

Order from:
General Services Administration
Federal Supply Service Bureau
470 E L'Enfant Plaza, S.W.
Washington, DC 20407
Ph: 202-619-8925
Internet: http://pub.fss.gsa.gov/h1-pub.html

CONCRETE REINFORCING STEEL INSTITUTE (CRSI)

933 No. Plum Grove Rd.
Schaumburg, IL 60173-4758
Ph: 708-517-1200
Fax: 708-517-1206

COPPER DEVELOPMENT ASSOCIATION (CDA)

260 Madison Ave.
New York, NY 10016
Ph: 212-251-7200

Fax: 212-251-7234
E-mail: http://www.copper.org

CORPS OF ENGINEERS (COE)

Order from:
U.S. Army Engineer Waterways Experiment Station
ATTN: Technical Report Distribution Section, Services Branch, TIC
3909 Halls Ferry Rd.
Vicksburg, MS 39180-6199
Ph: 601-634-2355
Fax: 601-634-2506

COUNCIL OF AMERICAN BUILDING OFFICIALS (CABO)

5203 Leesburg Pike, Suite 708
Falls Church, VA 22041
Ph: 703-931-4533
Fax: 703-379-1546

DEPARTMENT OF COMMERCE (DOC)

Order From:
National Technical Information Service
5285 Port Royal Road
Springfield, VA 22161
Ph: 703-487-4600
Fax: 703-321-8547
Internet: http://www.ntis.gov

DOOR AND HARDWARE INSTITUTE (DHI)

14170 Newbrook Dr.
Chantilly, VA 22021-2223
Ph: 703-222-2010
Fax: 703-222-2410

ENGINEERING MANUALS (EM)

USACE Publications Depot
Attn: CEIM-SP-D
2803 52nd Avenue
Hyattsville, MD 20781-1102
Ph: 301-394-0081

FACTORY MUTUAL ENGINEERING AND RESEARCH (FM)

1151 Boston-Providence Turnpike
P.O. Box 9102
Norwood, MA 02062-9102
Ph: 617-255-4681
Fax: 617-255-4359
Internet: http://www.factorymutual.com

FEDERAL SPECIFICATIONS (FS)

Order from:
General Services Administration
Federal Supply Service Bureau
470 L'Enfant Plaza, S.W.
Washington, DC 20407
Ph: 202-619-8925
Internet: http://pub.fss.gsa.gov/h1-pub.html

FEDERAL STANDARDS (FED-STD)

Order from:
General Services Administration
Federal Supply Service Bureau
470 E L'Enfant Plaza, S.W.
Washington, DC 20407
Ph: 202-619-8925
Internet: http://pub.fss.gsa.gov/hi-pub.html

FOUNDATION FOR CROSS-CONNECTION CONTROL AND HYDRAULIC RESEARCH (FCCCHR)

USC
KAP-200 University Park MC-2531
Los Angeles, CA 90089-2531
Ph: 213-740-2032
Fax: 213-740-8399

GYPSUM ASSOCIATION (GA)

810 First St. NE, Suite 510
Washington, DC 20002
Ph: 202-289-5440
Fax: 202-289-3707

HYDRAULIC INSTITUTE (HI)

9 Sylvan Way, Suite 180
Parsippany, NJ 07054-3802
Ph: 201-267-9700
Publication Hotline: 708-364-6206

HYDRONICS INSTITUTE (HYI)

35 Russo Pl.
P.O. Box 218
Berkeley Heights, NJ 07922-0218
Ph: 908-464-8200
Fax: 908-464-7818

INSTITUTE OF ELECTRICAL AND ELECTRONICS ENGINEERS (IEEE)

445 Hoes Ln, P. O. Box 1331
Piscataway, NJ 08855-1331
Ph: 800-678-4333
Fax: 908-981-9667
Internet: http//stdsbbs.ieee.org
E-mail: Stds-maillst@ieee.org

INSULATED CABLE ENGINEERS ASSOCIATION (ICEA)

P.O. Box 440
South Yarmouth, MA 02664
Ph: 508-394-4424
Fax: 508-394-1194
Order From:
American National Standards Institute
Customer Service Dept.
11 West 42nd Street
New York, NY 10036
Ph: 212-642-4900
Fax: 212-302-1286

INTERNATIONAL CONFERENCE OF BUILDING OFFICIALS (ICBO)

5360 Workman Mill Rd.
Whittier, CA 90601-2298
Ph: 310-699-0541
Fax: 310-692-3853

MANUFACTURERS STANDARDIZATION SOCIETY OF THE VALVE AND FITTINGS INDUSTRY (MSS)

127 Park St., NE
Vienna, VA 22180-4602
Ph: 703-281-6613
Fax: 703-281-6671

MARBLE INSTITUTE OF AMERICA (MIA)

33505 State St.
Farmington, MI 48335
Ph: 810-476-5558
Fax: 810-476-1630

MIDWEST INSULATION CONTRACTORS ASSOCIATION (MICA)

2017 So. 139th Cir.
Omaha, NE 68144
Ph: 402-342-3463

MILITARY SPECIFICATIONS (MS)

Order from:
Standardization Documents Order Desk
Building 4, Section D
700 Robbins Ave.
Philadelphia, PA 19111-5094
Ph: 215-697-2179
Fax: 215-697-2978

MILITARY STANDARDS (MIL-STD)

Order from:
Standardization Documents Order Desk
Building 4, Section D
700 Robbins Ave.
Philadelphia, PA 19111-5094
Ph: 215-697-2179
Fax: 215-697-2978

NATIONAL ASSOCIATION OF ARCHITECTURAL METAL MANUFACTURERS (NAAMM)

8 So. Michigan Ave, Suite 100
Chicago, IL 60603
Ph: 312-782-4951

NATIONAL ASSOCIATION OF PLUMBING-HEATING-COOLING CONTRACTORS (NAPHCC)

180 S. Washington Street
P.O. Box 6808
Falls Church, VA 22046
Ph: 800-533-7694
Fax: 703-237-7442

NATIONAL ELECTRICAL MANUFACTURERS ASSOCIATION (NEMA)

1300 N. 17th St., Suite 1847
Rosslyn, VA 22209
Ph: 703-841-3200
Fax: 202-457-8473
Internet: http//www.nema.org/

NATIONAL ENVIRONMENTAL BALANCING BUREAU (NEBB)

8575 Grovemont Circle
Gaithersburg, MD 20877-4121
Ph: 301-977-3698
Fax: 301-977-9589

NATIONAL FIRE PROTECTION ASSOCIATION (NFPA)

One Batterymarch Park
P.O. Box 9101
Quincy, MA 02269-9101
Ph: 800-344-3555
Fax: 800-593-6372
Internet: http://www.wpi.edu/~fpe/nfpa.html

NATIONAL HARDWOOD LUMBER ASSOCIATION (NHLA)

P.O. Box 34518
Memphis, TN 38134
Ph: 901-377-1818
Fax: 901-382-6419

NATIONAL INSTITUTE OF STANDARDS AND TECHNOLOGY (NIST)

Inquiries Room A903
Administration Building
Gaithersburg, MD 20899
Ph: 301-975-3058
Fax: 301-926-1630
Order From:
Superintendent of Documents
U.S. Government Printing Office (GPO)
Washington, DC 20402
Ph: 202-512-1800
Fax: 202-512-2250
or
National Technical Services (NTIS)
5285 Port Royal Rd.
Springfield, VA 22161
Ph: 703-487-4600
Fax: 703-321-8547
Internet: http://ww.gov/ntis.gov

NATIONAL READY-MIXED CONCRETE ASSOCIATION (NRMCA)

900 Spring St.
Silver Spring, MD 20910
Ph: 301-587-1400
Fax: 301-585-4219

NATIONAL WOOD WINDOW & DOOR ASSOCIATION (NWWDA)

1400 East Touhy Ave., Suite G-54
Des Plaines, IL 60018
Ph: 708-299-5200
Fax: 708-299-1286

NORTHEASTERN LUMBER MANUFACTURERS ASSOCIATION (NELMA)

P.O. Box 87A
Cumberland Center, ME 04021
Ph: 207-829-6901
Fax: 207-829-4293

NSF INTERNATIONAL (NSF)

3475 Plymouth Rd.

P.O. Box 130140
Ann Arbor, MI 48113-0140
Ph: 313-769-8010
Fax: 313-769-0109

PLUMBING AND DRAINAGE INSTITUTE (PDI)

45 Bristol Dr., Suite 101.
South Easton, MA 02375
Ph: 508-230-3516

PRECAST/PRESTRESSED CONCRETE INSTITUTE (PCI)

175 West Jackson Blvd.
Chicago, IL 60604-9773
Ph: 312-786-0300
Fax: 312-786-0353

SHEET METAL & AIR CONDITIONING CONTRACTORS' NATIONAL ASSOCIATION (SMACNA)

P.O. Box 221230
Chantilly, VA 22022-1230
Ph: 703-803-2989
Fax: 703-803-3732

SOCIETY OF AUTOMOTIVE ENGINEERS (SAE)

400 Commonwealth Dr.
Warrendale, PA 15096-0001
Ph: 412-776-4970
Fax: 412-776-0790

SOUTHERN CYPRESS MANUFACTURERS ASSOCIATION (SCMA)

400 Penn Center Boulevard, Suite 530
Pittsburgh, PA 15235
Ph: 412-829-0770
Fax: 412-829-0844

SOUTHERN PINE INSPECTION BUREAU (SPIB)

4709 Scenic Highway

Pensacola, FL 32504-9094
Ph: 904-434-2611
Fax: 904-433-5594

STEEL DECK INSTITUTE (SDI)

P.O. Box 9506
Canton, OH 44711
Ph: 216-493-7886
Fax: 216-493-7928

STEEL DOOR INSTITUTE (SDOI)

30200 Detroit Rd.
Cleveland, OH 44145-1967
Ph: 216-899-0010
Fax: 216-892-1404

STEEL JOIST INSTITUTE (SJI)

1205 Forty-eighth Ave. No., Suite A
Myrtle Beach, SC 29577-5424
Ph: 803-449-0487
Fax: 803-449-1343

STEEL STRUCTURES PAINTING COUNCIL (SSPC)

40 24th Street, 6th Floor
Pittsburgh, PA 15222-4643
Ph: 412-281-2331
Fax: 412-281-9992

TILE COUNCIL OF AMERICA (TCA)

P.O. Box 1787
Clemson, SC 29633-1787
Ph: 864-646-8453
FAX: 864-646-2821

UNDERWRITERS LABORATORIES (UL)

333 Pfingsten Rd.
Northbrook, IL 60062-2096
Ph: 800-704-4050
Fax: 847-509-6249
Internet: http://www.ul.com/
Order from:
Global Engineering Documents

15 Inverness Way East
Englewood, CO 80112-5776
Ph: 800-569-7128
Fax: 303-397-7945
E-mail: global@ihs.com or http://global.ihs.com

WEST COAST LUMBER INSPECTION BUREAU (WCLIB)

P.O. Box 23145
Portland, OR 97281
Ph: 503-639-0651
Fax: 503-684-8928

WESTERN WOOD PRODUCTS ASSOCIATION (WWPA)

Yeon Bldg.
522 SW 5th Ave.
Portland, OR 97204-2122
Ph: 503-224-3930
Fax: 503-224-3934

-- End of Section --

INDEX

SECTION 01130

ENVIRONMENTAL PROTECTION

PARAGRAPH		PAGE
PART 1	GENERAL	1
1.1	REFERENCES	1
1.2	DEFINITIONS	1
1.3	SUBMITTALS	1
1.4	SUBCONTRACTORS	1
1.5	ENVIRONMENTAL PROTECTION REQUIREMENTS	1
1.6	ENVIRONMENTAL PROTECTION PLAN	2
PART 2	PRODUCTS (Not Applicable)	4
PART 3	EXECUTION	4
3.1	SPECIAL ENVIRONMENTAL PROTECTION REQUIREMENTS	4
3.2	PROTECTION OF AIR RESOURCES	5
3.3	INSPECTION	6
3.4	MAINTENANCE OF POLLUTION CONTROL FACILITIES	6
3.5	TRAINING OF CONTRACTOR PERSONNEL	6

SECTION 01130

ENVIRONMENTAL PROTECTION

PART 1 GENERAL

1.1 REFERENCES

The publications listed below form a part of this specification to the extent referenced. The publications are referred to in the text by basic designation only.

CODE OF FEDERAL REGULATIONS (CFR)

40 CFR 261	Identification and listing of Hazardous Waste

ENGINEERING MANUALS (EM)

EM 385-1-1	(1996) U.S. Army Corps of Engineers Safety and Health Requirements Manual

1.2 DEFINITIONS

Environmental pollution and damage is defined as the presence of chemical, physical, or biological elements or agents that adversely affect human health or welfare; unfavorably alter ecological balances of plant or animal communities; or degrade the environment from an aesthetic, cultural or historic perspective. Environmental protection is the prevention/control of pollution and habitat disruption that may occur during construction. The control of environmental pollution and damage requires consideration of air, water, land, biological and cultural resources; and includes management of visual aesthetics; noise; solid, chemical, gaseous, and liquid waste; radiant energy and radioactive materials; and other pollutants.

1.3 SUBMITTALS

Government approval is required for all submittals with a "GA" designation; submittals having an "FIO" designation are for information only. The following shall be submitted in accordance with Section 01300 SUBMITTAL PROCEDURES:

1.4 SUBCONTRACTORS:

Compliance with the provisions of this section by subcontractors will be the responsibility of the Contractor.

1.5 ENVIRONMENTAL PROTECTION REQUIREMENTS

The Contractor and subcontractors shall comply with all applicable Federal, State, and local laws and regulations. The Contractor shall provide environmental protective measures and procedures to prevent and control pollution, limit habitat disruption, and correct environmental damage that occurs during construction.

A. Protection of Features

This section supplements the Contract Clauses PROTECTION OF EXISTING VEGETATION, STRUCTURES, EQUIPMENT, UTILITIES, AND IMPROVEMENTS; OPERATIONS AND

STORAGE AREAS; and CLEANING UP, Section 00700. The Contractor shall prepare a list of features requiring protection under the provisions of the contract clause which are not specially identified on the drawings as environmental features requiring protection. The Contractor shall protect those environmental features, indicated specially on the drawings, in spite of interference which their preservation may cause to the Contractor's work under the contract.

B. Permits

All permits must be obtained from the proper agency and paid for by the Contractor, see Contract Clause, PERMITS AND RESPONSIBILITIES.

C. Environmental Assessment of Contract Deviations

The Contract specifications have been prepared to comply with the special conditions and mitigation measures of an environmental nature which were established during the planning and development of this project. The Contractor is advised that deviations from the drawings or specifications (e.g., proposed alternate borrow areas, disposal areas, staging areas, alternate access routes, etc.) could result in the requirement for the Government to reanalyze the project from an environmental standpoint. Deviations from the construction methods and procedures indicated by the plans and specifications which may have an environmental impact will require a extended review, processing, and approval time by the Government. The Contracting Officer reserves the right to disapprove alternate methods, even if they are more cost effective, if the Contracting Officer determines that the proposed alternate method will have an adverse environmental impact.

D. Environmental Compliance and Monitoring.

All construction activity is subject to Federal Environmental laws including, but not limited to: The National Environmental Policy Act (NEPA); The National Historic Preservation Act (NHPA); Endangered Species Act; Resource Conservation and Recovery Act (RCRA); Comprehensive Environmental Response Liability and Compensation Act (CERLCA); Clean Water Act (CWA); Clean Air Act (CAA); Safe Drinking Water Act (SDWA), and applicable state, regional, and local equivalents. The Contractor is responsible for compliance with these laws.

1.6 ENVIRONMENTAL PROTECTION PLAN

Within 15 calendar days of Notice of Award, the Contractor shall submit an Environmental Protection Plan for review and acceptance by the Contracting Officer. Acceptance is conditional and is predicated upon satisfactory performance during construction. The Government reserves the right to require the Contractor to make changes in the Environmental Protection Plan or operations if the Contracting Officer determines that environmental protection requirements are not being met. The plan shall detail the actions which the Contractor shall take to comply with all applicable Federal, State, and local laws and regulations concerning environmental protection and pollution control and abatement, as well as the additional specific requirements of this contract. No physical work at the site shall begin prior to acceptance of the Contractor's plan. The environmental protection plan shall include, but not be limited to, the following:

A. List of State and Local Laws and Regulations

The Contractor shall provide as part of the Environmental Protection Plan a list of all State and local environmental laws and regulations which apply to the construction operations under the Contract.

B. Spill Control Plan

The Contractor shall include as part of the environmental protection plan, a Spill Control Plan. The plan shall include the procedures, instructions, and reports to be used in the event of an unforeseen spill of a substance regulated by the Emergency Response and Community Right-to-Know Act or regulated under State or local laws or regulations. The Spill Control Plan supplements the requirements of EM 385-1-1. This plan shall include as a minimum:

(1) The name of the individual who will be responsible for implementing and supervising the containment and cleanup.

(2) Training requirements for Contractor’s personnel and methods of accomplishing the training.

(3) A list of materials and equipment to be immediately available at the job site, tailored to cleanup work of the potential hazard(s) identified.

(4) The names and locations of suppliers of containment materials and locations of additional fuel oil recovery, cleanup, restoration, and material-placement equipment available in case of an unforeseen spill emergency.

(5) The methods and procedures to be used for expeditious contaminant cleanup.

(6) The name of the individual who will report any spills or hazardous substance releases and who will follow up with complete documentation. This individual shall immediately notify the Contracting Officer in addition to the legally required Federal, State, and local reporting channels (including the National Response Center 1-800-424-8802) if a reportable quantity spill occurs. The plan shall contain a list of the required reporting channels and telephone numbers.

C. Recycling and Waste Minimization Plan

The Contractor shall submit a Recycling and Waste Minimization Plan as a part of the Environmental Protection Plan. The plan shall detail the Contractor’s actions to comply with the following recycling and waste minimization requirements:

(1) The Contractor shall participate in State and local government sponsored recycling programs to reduce the volume of solid waste materials at the source.

D. Contaminant Prevention Plan

As a part of the Environmental Protection Plan, the Contractor shall prepare a contaminant prevention statement identifying potentially hazardous substances to be used on the job site and intended actions to prevent accidental or intentional introduction of such materials into the air, water, or ground. The Contractor shall detail provisions to be taken to meet

Federal, State, and local laws and regulations regarding the storage and handling of these materials.

E. Environmental Monitoring

The Contractor shall include in the plan the details of environmental monitoring requirements under the laws and regulations and a description of how this monitoring will be accomplished.

PART 2 PRODUCTS (Not Applicable)

PART 3 EXECUTION

3.1 SPECIAL ENVIRONMENTAL PROTECTION REQUIREMENTS

B. U.S. Department of Agriculture (USDA) Quarantined Considerations

The Contractor shall thoroughly clean all construction equipment at the prior job site in a manner that ensures all residual soil is removed and that egg deposits from plant pests are not present. The Contractor shall consult with the USDA Plant Protection and Quarantine (USDA - PPQ) jurisdictional office for additional cleaning requirements that may be necessary.

C. Soil Disposal Areas on Government Property

Excavated material (soils and concrete) shall be disposed only in those areas designated on the contract drawings. Hazardous, toxic, and radiological wastes (HTRW) shall be removed from the work area and be disposed in compliance with Federal, State, and local requirements. Disposal operations shall be managed and controlled to prevent erosion of soil or sediment from entering nearby waters or wetlands. Disposal operations shall be developed and managed in accordance with the grading plan shown on the drawings or as approved by the Contracting Officer.

D. Disposal of Solid Wastes

Solid waste is rubbish, debris, waste materials, garbage, and other discarded solid materials (excluding clearing debris and hazardous waste as defined in following paragraphs). Solid waste shall be placed in containers and disposed on a regular schedule. All handling and disposal shall be conducted in such a way as to prevent spillage and contamination. The Contractor shall transport waste materials off the Government property. The Contractor shall comply with site procedures, Federal, State, and local laws and regulations pertaining to the use of the landfill area.

E. Clearing Debris

Clearing debris is trees, tree stumps, tree trimmings, and shrubs, and leaves, vegetative matter, excavated natural materials (e.g., dirt, sand, and rock), and demolition products (e.g., brick, concrete, glass, and metals).

(1) The Contractor shall collect trees, tree stumps, tree trimmings, shrubs, leaves, and other vegetative matter; and shall transport from the project site for proper disposal in compliance with Federal, State, and local requirements. The Contractor shall segregate the matter where appropriate for proper disposal. Untreated and unpainted scrap lumber may be disposed of with this debris where appropriate.

(2) Excavated natural materials shall be placed in the designated area on the drawings.

(3) Demolition products shall be transported from the project site for proper disposal in compliance with Federal, State, and local requirements.

F. Disposal of Contractor Generated Hazardous Wastes

Hazardous wastes are hazardous substances as defined in 40 CFR 261, or as defined by applicable State and local regulations. Hazardous waste generated by construction activities shall be removed from the work area and be disposed in compliance with Federal, State, and local requirements. The Contractor shall segregate hazardous waste from other materials and wastes, and shall protect it from the weather by placing it in a safe covered location; precautionary measures against accidental spillage such as berming or other appropriate measures shall be taken. Hazardous waste shall be removed from the project site within 60 days. Hazardous waste shall not be dumped onto the ground, into storm sewers or open water courses, or into the sanitary sewer system.

G. Fuels and Lubricants

Fueling and lubrication of equipment and motor vehicles shall be conducted in a manner that affords the maximum protection against spills and evaporation. Lubricants and waste oil to be discarded shall be stored in marked corrosion-resistant containers and recycled or disposed in accordance with Federal, State, and local laws and regulations.

H. Borrow Sites

The Contractor will not have access to any borrow sites that may be located on Hill AFB, Utah. In addition, the Contractor will not be allowed to waste trash or construction debris or any contaminated materials on the Fort Irwin Army Installatiion.

3.2 PROTECTION OF AIR RESOURCES

Special management techniques as set out below shall be implemented to control air pollution by the construction activities. These techniques supplement the requirements of Federal, State, and local laws and regulations; and the safety requirements under this Contract. If any of the following techniques conflict with the requirements of Federal, State, or local laws or regulations, or safety requirements under this contract, then those requirements shall be followed in lieu of the following.

A. Particulates

Airborne particulates, including dust particles, from construction activities and processing and preparation of materials shall be controlled at all times, including weekends, holidays, and hours when work is not in progress. The Contractor shall maintain all excavations, stockpiles, haul roads, permanent and temporary access roads, plant sites, disposal sites, borrow areas, and all other work areas free from airborne dust which would cause a hazard or nuisance.

B. Dust Control:

Precaution shall be exercised at all times to control dust created as a result of any operation during the construction period. It shall be the

responsibility of the Contractor to protect the facilities and to protect adjacent property from damage as a result of his operations.

C. Burning Rubbish and Debris:

Open burning of rubbish, debris and other combustibles will not be permitted on the Base.

3.3 INSPECTION

If the Contracting Officer notifies the Contractor in writing of any observed noncompliance with contract requirements or Federal, State, or local laws, regulations, or permits, the Contractor shall inform the Contracting Officer of proposed corrective action and take such action to correct the noncompliance. Such notice, when delivered to the Contractor or his authorized representative at the site of the work, shall be deemed sufficient for the purpose. If the Contractor fails to comply promptly, the Contracting Officer may issue an order stopping all or part of the work until satisfactory corrective action is taken. No time extensions will be granted or costs or damages allowed to the Contractor for any such suspension, unless it was determined that the Contractor was in compliance in accordance with FAR 52.212-12, see Section 00700.

3.4 MAINTENANCE OF POLLUTION CONTROL FACILITIES

The Contractor shall maintain all constructed pollution control facilities and portable pollution control devices for the duration of the Contract or for the length of time construction activities create the particular pollutant.

3.5 TRAINING OF CONTRACTOR PERSONNEL

Contractor personnel shall be trained in environmental protection and pollution control. The Contractor shall conduct environmental protection/pollution control meetings for all Contractor personnel monthly. The training and meeting agenda shall include methods of detecting and avoiding pollution, familiarization with pollution standards, both statutory and contractual, installation and care of facilities (vegetative covers, etc.), and instruments required for monitoring purposes to ensure adequate and continuous environmental protection/pollution control. Anticipated hazardous or toxic chemicals or wastes, and other regulated contaminants, shall also be discussed. Other items to be discussed shall include recognition and protection of archaeologic sites and artifacts.

-- End of Section --

INDEX

SECTION 01330

SUBMITTAL PROCEDURES

PARAGRAPH		PAGE
PART 1	GENERAL	1
1.1	SUBMITTAL CLASSIFICATION	1
1.2	SUBMITTAL REVIEW AND APPROVAL	1
1.3	GOVERNMENT APPROVED SUBMITTALS	1
1.4	DISAPPROVED SUBMITTALS	2
1.5	SUBMITTALS	2
1.6	PAYMENT FOR ITEMS FOR WHICH A SUBMITTAL AND APPROVAL IS REQUIRED	2
PART 2	PRODUCTS (Not Applicable)	2
PART 3	EXECUTION	2
3.1	GENERAL	2
3.2	SUBMITTAL REGISTER (ENG FORM 4288)	2
3.3	SCHEDULING	3
3.4	TRANSMITTAL FORM (ENG FORM 4025)	3
3.5	SUBMITTAL PROCEDURE	3
3.6	MECHANICAL ROOM LAYOUT DRAWINGS:	4
3.7	SPARE PARTS LIST AND MAINTENANCE OPERATIONS MANUALS:	4
3.8	COLOR BOARDS:	5
3.10	CONTROL OF SUBMITTALS	5
3.11	GOVERNMENT APPROVED SUBMITTALS	5
3.12	INFORMATION ONLY SUBMITTALS	6
3.13	STAMPS	6

SECTION 01330

SUBMITTAL PROCEDURES

PART 1 GENERAL

1.1 SUBMITTAL CLASSIFICATION

Submittals are identified with submittal description (SD) numbers and are classified as follows:

1.1.1 Government Approved

Governmental approval is required for extensions of design, critical materials, deviations, equipment whose compatibility with the entire system must be checked, and other items as designated by the Contracting Officer. Within the terms of the Contract Clause entitled "Specifications and Drawings for Construction," they are considered to be "shop drawings."

1.1.2 Information Only

All submittals not requiring Government approval will be for information only. They are not considered to be "shop drawings" within the terms of the Contract Clause referred to above.

1.2 SUBMITTAL REVIEW AND APPROVAL

Before submission, Contractor shall review all submittals prepared by subcontractors, suppliers, and himself, for completeness, accuracy, and compliance with plans and specifications. Contractor shall not use red markings on submittals. Red markings are reserved for use by the Contracting Officer. Approval by Contractor shall be indicated on each drawing by an "Approved" stamp with Contractor’s name, signature, and date. The Contractor shall have independent agents not associated with his organization to do the review. The review shall be done by a licensed architect or registered engineers in the appropriate disciplines of architectural, civil, structural, mechanical and electrical, as appropriate. The reviews shall be thorough and complete and authenticated by registered engineer’s or architect’s stamp. This administration of submittal review must be integrated into the Contractor’s Quality Control Plan. The plan must delineate in precise detail how the Contractor intends to satisfy this requirement. This should include names of organizations, qualifications and names of individuals who will be doing the work with their qualifications/resumes. Supplier’s or subcontractors certifications are not acceptable as meeting this requirement of independent review. Submittals not conforming to the requirements of this section will be returned to the Contractor for correction and resubmittal.

1.3 GOVERNMENT APPROVED SUBMITTALS

The Contracting Officer’s approval of submittals shall not be construed as a complete check, but will indicate only that the general method of construction, materials, detailing and other information are satisfactory. Approval will not relieve the Contractor of the responsibility for any error which may exist, as the Contractor under the CQC requirements of this contract is responsible for dimensions, the design of adequate connections and details, and the satisfactory construction of all work. After submittals have been approved by the Contracting Officer, no resubmittal for the purpose of substituting materials or equipment will be considered unless accompanied by an explanation of why a substitution is necessary.

1.4 DISAPPROVED SUBMITTALS

The Contractor shall make all corrections required by the Contracting Officer and promptly furnish a corrected submittal in the form and number of copies specified for the initial submittal. If the Contractor considers any correction indicated on the submittals to constitute a change to the contract, a notice in accordance with the Contract Clause "Changes" shall be given promptly to the Contracting Officer.

1.5 SUBMITTALS

The Contractor may be required to mail Submittals to multiple locations as directed. The location(s) for Government review of Contractor Submittals will be determined at a meeting between the Contractor and the Administrative Contracting Officer.

1.6 PAYMENT FOR ITEMS FOR WHICH A SUBMITTAL AND APPROVAL IS REQUIRED

In accordance with FAR 52.232-5, "Payments Under Fixed-Price Construction Contracts", the Government shall make progress payments to the Contractor monthly based on estimates of work accomplished which meets the standards of quality established under the contract. On items for which submittals must be approved by the Contracting Officer, payment cannot be made for the item until the Government establishes that the item "meets the standards of quality" required by the contract. The Contractor shall not invoice for, nor shall the Government make payment for any item, for which submittal and approval is required, until the item has been submitted and approved as described herein.

PART 2 PRODUCTS (Not Applicable)

PART 3 EXECUTION

3.1 GENERAL

The Contractor shall make submittals as required by the specifications. The Contracting Officer may request submittals in addition to those specified when deemed necessary to adequately describe the work covered in the respective sections. Units of weights and measures used on all submittals shall be the same as those used in the contract drawings. Each submittal shall be complete and in sufficient detail to allow ready determination of compliance with contract requirements. Prior to submittal, all items shall be checked and approved by the Contractor’s Quality Control (CQC) representative and each item shall be stamped, signed, and dated by the CQC representative indicating action taken. Proposed deviations from the contract requirements shall be clearly identified. Submittals shall include items such as: Contractor’s, manufacturer’s, or fabricator’s drawings; descriptive literature including (but not limited to) catalog cuts, diagrams, operating charts or curves; test reports; test cylinders; samples; O&M manuals (including parts list); certifications; warranties; and other such required submittals. Submittals requiring Government approval shall be scheduled and made prior to the acquisition of the material or equipment covered thereby. Samples remaining upon completion of the work shall be picked up and disposed of in accordance with manufacturer’s Material Safety Data Sheets (MSDS) and in compliance with existing laws and regulations.

3.2 SUBMITTAL REGISTER (ENG FORM 4288)

At the end of this section is one set of ENG Form 4288 listing items of equipment and materials for which submittals are required by the

specifications; this list may not be all inclusive and additional submittals may be required. Columns "d" through "q" have been completed by the Government; the Contractor shall complete columns "a" through “c” and "s" through "x" and submit two (2) completed forms to the Contracting Officer for approval within thirty (30) calendar days after Notice to Proceed. The approved submittal register will become the scheduling document and will be used to control submittals throughout the life of the contract. The submittal register and the progress schedules shall be coordinated. The Contractor shall insure that any errors in draft ENG Form 4288 and any omissions are added prior to submission for approval.

3.3 SCHEDULING

Submittals covering component items forming a system or items that are interrelated shall be scheduled to be coordinated and submitted concurrently. Certifications to be submitted with the pertinent drawings shall be so scheduled. Adequate time (a minimum of 35 calendar days exclusive of mailing time) shall be allowed and shown on the register for review and approval. No delay damages or time extensions will be allowed for time lost in late submittals.

3.4 TRANSMITTAL FORM (ENG FORM 4025)

The Contractor shall complete ENG Form 4025, "Transmittal of Shop Drawings, Equipment Data, Material Samples, or Manufacturer’s Certificates of Compliance" and forward six (6) copies of same with each set of shop drawings, certificates of compliance, materials, fixtures and equipment lists submitted for approval. Four (4) copies of the ENG Form 4025 shall be submitted for information only data. No translucent or coated reproduced copies will be accepted. Each item submitted shall be listed separately on the ENG Form 4025. For new submittals or resubmittals mark the appropriate box; or resubmittals also insert previous transmittal number. Blank ENG Forms 4025 will be furnished by the Contracting Officer on request. Shop drawings shall be either blue line or black line prints on a white background. Blueprints are not acceptable. Each submittal shall be identified with the Contractor’s name, Contract Number, Transmittal Number, and Item Number to correspond with Item Number listed on ENG Form 4288. The following identification shall be marked on submittals as applicable:

Contract Number
Project Title and Location
Subcontractor’s Name
Supplier’s Name or Manufacturer’s Name
Specification Section and Paragraph Number
Contract Drawing File Number

3.5 SUBMITTAL PROCEDURE

Submittals shall be made as follows:

3.5.1 Procedures

Submittals required by the CONTRACT CLAUSES and other non-technical parts of the contract are not included in this section. The Contractor shall submit to the Contracting Officer: six (6) copies for approval, and four (4) copies for information only, of all shop drawings, certificates of compliance, materials, fixtures and equipment lists called for under the various headings of these specifications. These drawings, certificates and lists shall be complete and detailed and, prior to submission, must be reviewed and certified correct by the Contractor as required by the Quality Control System paragraph of the Construction Quality Control Section. If approved by the Contracting Officer,

four (4) sets of all submittals will be retained by the Contracting Officer and two (2) sets will be returned to the Contractor. Submittals for information only usually will not be returned. The Contractor is encouraged to submit paper documents that are printed/copied double-sided on recycled paper that has at least 20% postconsumer material.

3.5.2 Deviations

For submittals which include proposed deviations requested by the Contractor, the column "variation" of ENG Form 4025 shall be checked. The Contractor shall set forth in writing the reason for any deviations and annotate such deviations on the submittal. The Government reserves the right to rescind inadvertent approval of submittals containing unnoted deviations.

3.6 MECHANICAL ROOM LAYOUT DRAWINGS:

The Contractor shall submit a layout drawing, including appropriate elevations and sections as required, for each Mechanical Room showing the room arrangement he proposes for all pieces of equipment and appurtenances thereto (viz., air-conditioning equipment, boilers, compressors, hot water tanks, pumps, electrical control panels, ducts, piping, etc.), that are to be located in the room. The Mechanical Room floor slab will not be placed until the complete Mechanical Room layout drawing has been submitted and approved. No payment will be made to the Contractor for any of the equipment for the room or its installation until these drawings have been approved. Mechanical Room Layout Drawings shall be identified and submitted in the manner specified for "Shop Drawings". Equipment rooms shown on the drawings are of adequate size to accommodate equipment of required capacities, as available from several manufacturers, with sufficient space left for access, servicing, removal, etc. The use of equipment items with dimensions such as to crowd the space will not be permitted.

3.7 SPARE PARTS LIST AND MAINTENANCE OPERATIONS MANUALS:

Within 30 calendar days after approval of shop drawings and equipment lists, the Contractor shall submit, to the Contracting Officer, 3 copies of spare parts lists and operating and maintenance manuals as required under the various headings of these specifications. One reproducible, unfolded copy shall be provided of all operating instructions, control diagrams, etc., that are larger than 8-1/2-inches by 11-inches; this does not apply to standard manufacturer’s data.

(A) Spare parts lists shall contain the following listed information:

(1) Quantity of parts required for 120 days and one year of operation.

(2) Description of each spare part.

(3) Drawing number and shop drawing reference.

(4) Part equipment code number.

(5) Unit price of each item.

(6) Total price of all items.

(7) Procurement lead time with particular attention to long lead times.

(8) Name and address of nearest supplier.

(9) Such remarks and data as the manufacturer may consider pertinent.

(10) Complete parts list of all replaceable items.

(B) Operation, Maintenance, and Repair Manuals and Instructions:

(1) The requirements for furnishing operating, maintenance, and repair data/manuals and field instructions under this contract are specified in the Technical Specifications. The Contractor shall submit to the Contracting Officer, not later than 60 calendar days after the Notice to Proceed, an outline showing the proposed submittal date(s) of operation and maintenance manuals to be furnished the Government and the scheduled date(s) of all required field instructions to be provided by Contractor furnished personnel or manufacturer’s representatives. All operation and maintenance manuals must be furnished to the Contracting Officer not later than 60 calendar days prior to turnover of the facility to the Government.

3.8 COLOR BOARDS:

Five sets of color boards shall be submitted within 90 calendar days after receipt of Notice to Proceed for all projects which involve building construction or building modifications. The board shall include samples of colors and finishes of all interior surfaces such as walls, floors, and ceilings. Material shall be submitted in a standard 8-1/2 inches by 11 inches three-ring binder. Fold-outs may be employed to 25-1/2 inches by 33 inches as long as they refold within the standard binder. Actual material samples shall be displayed showing color, texture, pattern, finish, thickness, etc., for all appearance related items where choice exists. These samples shall be large enough to indicate true patterns. However, care should be taken to present materials in proportion to that which may be installed in a given situation. Samples shall be organized by color schemes with a separate sample for each scheme. The schemes shall be coordinated by room names and numbers shown on the architectural floor plans. Colors shall be labeled with generic color names. Project title and location (Base) shall be placed in the lower right-hand corner of each module. Where special finishes such as architectural concrete, carpet, or prefinished textured metal panels are required, separate samples not less than 8 inches x 10 inches square shall be submitted with the board. If more space is needed, more than one board per set may be submitted. The Contractor shall certify that he has reviewed the color boards in detail and that they are in strict accordance with the contract drawings and specifications except as may be otherwise explicitly stated. Submittal of the color board shall not relieve the Contractor of the responsibility to submit the samples required by the Technical Specifications.

3.10 CONTROL OF SUBMITTALS

The Contractor shall carefully control his procurement operations to ensure that each individual submittal is made on or before the Contractor scheduled submittal date shown on the approved "Submittal Register."

3.11 GOVERNMENT APPROVED SUBMITTALS

Upon completion of review of submittals requiring Government approval, the submittals will be identified as having received approval by being so stamped and dated. Four (4) copies of the submittal will be retained by the Contracting Officer and two (2) copies of the submittal will be returned to the Contractor.

3.12 INFORMATION ONLY SUBMITTALS

Normally submittals for information only will not be returned. Approval of the Contracting Officer is not required on information only submittals. The Government reserves the right to require the Contractor to resubmit any item found not to comply with the contract. This does not relieve the Contractor from the obligation to furnish material conforming to the plans and specifications; will not prevent the Contracting Officer from requiring removal and replacement of nonconforming material incorporated in the work; and does not relieve the Contractor of the requirement to furnish samples for testing by the Government laboratory or for check testing by the Government in those instances where the technical specifications so prescribe.

3.13 STAMPS

Stamps used by the Contractor on the submittal data to certify that the submittal meets contract requirements shall be similar to the following:

CONTRACTOR
(Firm Name)
_____ Approved
_____ Approved with corrections as noted on submittal data and/or attached sheets(s).
SIGNATURE: _____
TITLE: _____
DATE: _____

-- End of Section --

SUBMITTAL REGISTER
(ER 415 1-10)

CONTRACT NO.

TITLE AND LOCATION
CLINIC ADDITION, HILL AFB, UT

CONTRACTOR

SPECIFICATION SECTION
02050

ACTIVITY NO. a.	TRANS-MITTAL NO. b.	ITEM NO c.	SPECIFICATION PARAGRAPH NUMBER d.	DESCRIPTION OF ITEM SUBMITTED e.	TYPE OF SUBMITTAL: DATA f.	DRAWINGS g.	INSTRUCTIONS h.	SCHEDULES i.	STATEMENTS j.	REPORTS k.	CERTIFICATES l.	SAMPLES m.	RECORDS n.	O&M MANUALS o.	CLASSIFICATION: INFORMATION ONLY p.	GOVERNMENT APPROVED q.	REVIEWER r.	CONTRACTOR SCHEDULE DATES: SUBMIT s.	APPROVAL NEEDED BY t.	MATERIAL NEEDED BY u.	CONTRACTOR ACTION: CODE v.	DATE w.	SUBMIT TO GOVERN-MENT x.	GOVERNMENT ACTION: CODE y.	DATE z.	REMARKS aa.
			1.3	Work Plan									X			X										

SUBMITTAL REGISTER
(ER 415 1-10)

CONTRACT NO.

TITLE AND LOCATION
CLINIC ADDITION, HILL AFB, UT

CONTRACTOR

SPECIFICATION SECTION
02210

ACTIVITY NO. a.	TRANS-MITTAL NO. b.	ITEM NO. c.	SPECIFICATION PARAGRAPH NUMBER d.	DESCRIPTION OF ITEM SUBMITTED e.	TYPE OF SUBMITTAL: DATA f.	DRAWINGS g.	INSTRUCTIONS h.	SCHEDULES i.	STATEMENTS j.	REPORTS k.	CERTIFICATES l.	SAMPLES m.	RECORDS n.	O&M MANUALS o.	CLASSIFICATION: INFORMATION ONLY p.	GOVERNMENT APPROVED q.	REVIEWER r.	CONTRACTOR SCHEDULE DATES: SUBMIT s.	APPROVAL NEEDED BY t.	MATERIAL NEEDED BY u.	CONTRACTOR ACTION: CODE v.	DATE w.	SUBMIT TO GOVERN-MENT x.	GOVERNMENT ACTION: CODE y.	DATE z.	REMARKS aa.
			3.10	Field Testing Control					X						X											
			3.10	Field Testing Control						X					X											
			1.3.1	Satisfactory Materials						X																

SUBMITTAL REGISTER
(ER 415 1-10)

CONTRACT NO.

TITLE AND LOCATION
CLINIC ADDITION, HILL AFB, UT

CONTRACTOR

SPECIFICATION SECTION
02221

ACTIVITY NO. a.	TRANS-MITTAL NO. b.	ITEM NO. c.	SPECIFICATION PARAGRAPH NUMBER d.	DESCRIPTION OF ITEM SUBMITTED e.	TYPE OF SUBMITTAL: DATA f.	DRAWINGS g.	INSTRUCTIONS h.	SCHEDULES i.	STATEMENTS j.	REPORTS k.	CERTIFICATES l.	SAMPLES m.	RECORDS n.	O&M MANUALS o.	CLASSIFICATION: INFORMATION ONLY p.	GOVERNMENT APPROVED q.	REVIEWER r.	CONTRACTOR SCHEDULE DATES: SUBMIT s.	APPROVAL NEEDED BY t.	MATERIAL NEEDED BY u.	CONTRACTOR ACTION: CODE v.	DATE w.	SUBMIT TO GOVERN-MENT x.	GOVERNMENT ACTION: CODE y.	DATE z.	REMARKS aa.
			1.3	Field Density Tests						X					X											
			1.3	Testing of Backfill Materials						X					X											

SUBMITTAL REGISTER
(ER 415 1-10)

CONTRACT NO.

TITLE AND LOCATION
CLINIC ADDITION, HILL AFB, UT

CONTRACTOR

SPECIFICATION SECTION
02222

ACTIVITY NO. a.	TRANS-MITTAL NO. b.	ITEM NO c.	SPECIFICATION PARAGRAPH NUMBER d.	DESCRIPTION OF ITEM SUBMITTED e.	TYPE OF SUBMITTAL: DATA f.	DRAWINGS g.	INSTRUCTIONS h.	SCHEDULES i.	STATEMENTS j.	REPORTS k.	CERTIFICATES l.	SAMPLES m.	RECORDS n.	O&M MANUALS o.	CLASSIFICATION: INFORMATION ONLY p.	GOVERNMENT APPROVED q.	REVIEWER r.	CONTRACTOR SCHEDULE DATES: SUBMIT s.	APPROVAL NEEDED BY t.	MATERIAL NEEDED BY u.	CONTRACTOR ACTION: CODE v.	DATE w.	SUBMIT TO GOVERN-MENT x.	GOVERNMENT ACTION: CODE y.	DATE z.	REMARKS aa.
			3.4.3	Field Density Tests						X					X											
			3.4.2	Testing of Backfill Materials						X					X											

SUBMITTAL REGISTER
(ER 415 1-10)

CONTRACT NO.

TITLE AND LOCATION
CLINIC ADDITION, HILL AFB, UT

CONTRACTOR

SPECIFICATION SECTION
02285

ACTIVITY NO. a.	TRANS-MITTAL NO. b.	ITEM NO. c.	SPECIFICATION PARAGRAPH NUMBER d.	DESCRIPTION OF ITEM SUBMITTED e.	TYPE OF SUBMITTAL: DATA f.	DRAWINGS g.	INSTRUCTIONS h.	SCHEDULES i.	STATEMENTS j.	REPORTS k.	CERTIFICATES l.	SAMPLES m.	RECORDS n.	O&M MANUALS o.	CLASSIFICATION: INFORMATION ONLY p.	GOVERNMENT APPROVED q.	REVIEWER r.	CONTRACTOR SCHEDULE DATES: SUBMIT s.	APPROVAL NEEDED BY t.	MATERIAL NEEDED BY u.	CONTRACTOR ACTION: CODE v.	DATE w.	SUBMIT TO GOVERN-MENT x.	GOVERNMENT ACTION: CODE y.	DATE z.	REMARKS aa.
			1.2	Qualifications	X										X											
			1.2	Pesticides			X								X											
			1.2	Pesticides								X			X											

SUBMITTAL REGISTER
(ER 415 1-10)

CONTRACT NO.

TITLE AND LOCATION
CLINIC ADDITION, HILL AFB, UT

CONTRACTOR

SPECIFICATION SECTION
02511

ACTIVITY NO. a.	TRANS-MITTAL NO. b.	ITEM NO c.	SPECIFICATION PARAGRAPH NUMBER d.	DESCRIPTION OF ITEM SUBMITTED e.	TYPE OF SUBMITTAL: DATA f.	DRAWINGS g.	INSTRUCTIONS h.	SCHEDULES i.	STATEMENTS j.	REPORTS k.	CERTIFICATES l.	SAMPLES m.	RECORDS n.	O&M MANUALS o.	CLASSIFICATION: INFORMATION ONLY p.	GOVERNMENT APPROVED q.	REVIEWER r.	CONTRACTOR SCHEDULE DATES: SUBMIT s.	APPROVAL NEEDED BY t.	MATERIAL NEEDED BY u.	CONTRACTOR ACTION: CODE v.	DATE w.	SUBMIT TO GOVERN-MENT x.	GOVERNMENT ACTION: CODE y.	DATE z.	REMARKS aa.
			3.8	Field Quality Control						X					X											
			2.1	Concrete									X		X											

SUBMITTAL REGISTER
(ER 415 1-10)

CONTRACT NO.

TITLE AND LOCATION
CLINIC ADDITION, HILL AFB, UT

CONTRACTOR

SPECIFICATION SECTION
02660

ACTIVITY NO. a.	TRANS-MITTAL NO. b.	ITEM NO c.	SPECIFICATION PARAGRAPH NUMBER d.	DESCRIPTION OF ITEM SUBMITTED e.	TYPE OF SUBMITTAL: DATA f.	DRAWINGS g.	INSTRUCTIONS h.	SCHEDULES i.	STATEMENTS j.	REPORTS k.	CERTIFICATES l.	SAMPLES m.	RECORDS n.	O&M MANUALS o.	CLASSIFICATION: INFORMATION ONLY p.	GOVERNMENT APPROVED q.	REVIEWER r.	CONTRACTOR SCHEDULE DATES: SUBMIT s.	APPROVAL NEEDED BY t.	MATERIAL NEEDED BY u.	CONTRACTOR ACTION: CODE v.	DATE w.	SUBMIT TO GOVERN-MENT x.	GOVERNMENT ACTION: CODE y.	DATE z.	REMARKS aa.
			3.1	Installation			X								X											
			1.4	Waste Water Disposal Method					X						X											
			1.4	Statement of Satisfactory Installation					X						X											
			1.4	Bacterial Examination						X					X											
			3.1.4.3	PE, RTRP, and/or RPMP							X				X											
				Manufacturer's Representative																						
			1.4	Contractor's Installation							X				X											

SUBMITTAL REGISTER
(ER 415 1-10)

CONTRACT NO.

TITLE AND LOCATION
CLINIC ADDITION, HILL AFB, UT

CONTRACTOR

SPECIFICATION SECTION
02685

ACTIVITY NO. a.	TRANS-MITTAL NO. b.	ITEM NO. c.	SPECIFICATION PARAGRAPH NUMBER d.	DESCRIPTION OF ITEM SUBMITTED e.	TYPE OF SUBMITTAL: DATA f.	DRAWINGS g.	INSTRUCTIONS h.	SCHEDULES i.	STATEMENTS j.	REPORTS k.	CERTIFICATES l.	SAMPLES m.	RECORDS n.	O&M MANUALS o.	CLASSIFICATION: INFORMATION ONLY p.	GOVERNMENT APPROVED q.	REVIEWER r.	CONTRACTOR SCHEDULE DATES: SUBMIT s.	APPROVAL NEEDED BY t.	MATERIAL NEEDED BY u.	CONTRACTOR ACTION: CODE v.	DATE w.	SUBMIT TO GOVERN-MENT x.	GOVERNMENT ACTION: CODE y.	DATE z.	REMARKS aa.
			2.1	Pipe, Fittings, and Associated		X									X											
				Materials																						
			1.3	Equipment and Materials				X							X											
			1.3	Notification				X								X										
			1.2.2	Jointing Polyethylene and Fiberglass					X							X										
				Piping																						
			1.3	Connection and Abandonment					X							X										
				Procedures																						
			1.3	Training							X				X											

SUBMITTAL REGISTER
(ER 415 1-10)

CONTRACT NO.

TITLE AND LOCATION
CLINIC ADDITION, HILL AFB, UT

CONTRACTOR

SPECIFICATION SECTION
02720

ACTIVITY NO. a.	TRANS-MITTAL NO. b.	ITEM NO c.	SPECIFICATION PARAGRAPH NUMBER d.	DESCRIPTION OF ITEM SUBMITTED e.	TYPE OF SUBMITTAL: DATA f.	DRAWINGS g.	INSTRUCTIONS h.	SCHEDULES i.	STATEMENTS j.	REPORTS k.	CERTIFICATES l.	SAMPLES m.	RECORDS n.	O&M MANUALS o.	CLASSIFICATION: INFORMATION ONLY p.	GOVERNMENT APPROVED q.	REVIEWER r.	CONTRACTOR SCHEDULE DATES: SUBMIT s.	APPROVAL NEEDED BY t.	MATERIAL NEEDED BY u.	CONTRACTOR ACTION: CODE v.	DATE w.	SUBMIT TO GOVERN-MENT x.	GOVERNMENT ACTION: CODE y.	DATE z.	REMARKS aa.
			3.3	Placing Pipe			X								X											
			1.3	Resin Certification							X				X											
			1.3	Pipeline Testing							X				X											
			1.3	Determination of Density							X				X											
			2.3.7	Frame and Cover or Gratings							X					X										

SUBMITTAL REGISTER
(ER 415 1-10)

CONTRACT NO.

TITLE AND LOCATION
CLINIC ADDITION, HILL AFB, UT

CONTRACTOR

SPECIFICATION SECTION
02811

ACTIVITY NO. a.	TRANS-MITTAL NO. b.	ITEM NO c.	SPECIFICATION PARAGRAPH NUMBER d.	DESCRIPTION OF ITEM SUBMITTED e.	TYPE OF SUBMITTAL: DATA f.	DRAWINGS g.	INSTRUCTIONS h.	SCHEDULES i.	STATEMENTS j.	REPORTS k.	CERTIFICATES l.	SAMPLES m.	RECORDS n.	O&M MANUALS o.	CLASSIFICATION: INFORMATION ONLY p.	GOVERNMENT APPROVED q.	REVIEWER r.	CONTRACTOR SCHEDULE DATES: SUBMIT s.	APPROVAL NEEDED BY t.	MATERIAL NEEDED BY u.	CONTRACTOR ACTION: CODE v.	DATE w.	SUBMIT TO GOVERN-MENT x.	GOVERNMENT ACTION: CODE y.	DATE z.	REMARKS aa.
			1.3	Framed Instructions	X										X											
			1.3	Field Training Data	X										X											
			1.3	Design Analysis and Calculations	X										X											
			1.3	Spare Parts	X										X											
			1.3	Irrigation System		X										X										
			1.3	Irrigation System			X								X											
			3.2	Field Tests						X					X											
			1.3	Irrigation System							X				X											
			1.3	Irrigation System										X	X											

SUBMITTAL REGISTER
(ER 415 1-10)

CONTRACT NO.

TITLE AND LOCATION
CLINIC ADDITION, HILL AFB, UT

CONTRACTOR

SPECIFICATION SECTION
02935

ACTIVITY NO. a.	TRANS-MITTAL NO. b.	ITEM NO. c.	SPECIFICATION PARAGRAPH NUMBER d.	DESCRIPTION OF ITEM SUBMITTED e.	TYPE OF SUBMITTAL: DATA f.	DRAWINGS g.	INSTRUCTIONS h.	SCHEDULES i.	STATEMENTS j.	REPORTS k.	CERTIFICATES l.	SAMPLES m.	RECORDS n.	O&M MANUALS o.	CLASSIFICATION: INFORMATION ONLY p.	GOVERNMENT APPROVED q.	REVIEWER r.	CONTRACTOR SCHEDULE DATES: SUBMIT s.	APPROVAL NEEDED BY t.	MATERIAL NEEDED BY u.	CONTRACTOR ACTION: CODE v.	DATE w.	SUBMIT TO GOVERN-MENT x.	GOVERNMENT ACTION: CODE y.	DATE z.	REMARKS aa.
			1.2	Equipment List				X							X											
			1.4.1	Delivery					X						X											
			3.7	Application of Pesticide					X						X											
			3.10.3.7	Maintenance Report					X						X											
			3.10	Turf Establishment Period					X						X											
			1.2	Sod							X				X											
			1.2	Fertilizer							X				X											
			1.2	Agricultural Limestone							X				X											
			1.2	Peat							X				X											
			1.2	Pesticide Material							X				X											
			1.2	Topsoil							X				X											

SUBMITTAL REGISTER
(ER 415 1-10)

CONTRACT NO.

TITLE AND LOCATION
CLINIC ADDITION, HILL AFB, UT

CONTRACTOR

SPECIFICATION SECTION
02950

ACTIVITY NO. a.	TRANS-MITTAL NO. b.	ITEM NO c.	SPECIFICATION PARAGRAPH NUMBER d.	DESCRIPTION OF ITEM SUBMITTED e.	TYPE OF SUBMITTAL: DATA f.	DRAWINGS g.	INSTRUCTIONS h.	SCHEDULES i.	STATEMENTS j.	REPORTS k.	CERTIFICATES l.	SAMPLES m.	RECORDS n.	O&M MANUALS o.	CLASSIFICATION: INFORMATION ONLY p.	GOVERNMENT APPROVED q.	REVIEWER r.	CONTRACTOR SCHEDULE DATES: SUBMIT s.	APPROVAL NEEDED BY t.	MATERIAL NEEDED BY u.	CONTRACTOR ACTION: CODE v.	DATE w.	SUBMIT TO GOVERN-MENT x.	GOVERNMENT ACTION: CODE y.	DATE z.	REMARKS aa.
			2.8	Edging Material	X											X										
			3.10	Application of Pesticide Material				X							X											
			1.4.2	Delivery					X						X											
			3.10	Application of Pesticide Material					X						X											
			2.2.1	Soil Test						X					X											
			3.4	Percolation Test						X					X											
			2.2	Topsoil							X				X											
			2.3	Soil Amendments							X				X											
			2.1	Plants							X				X											
			2.13	Pesticide							X				X											
			3.12	Plant Establishment Period									X		X											
			3.12.2.8	Maintenance Report									X		X											
			3.12.2.9	Maintenance Instructions									X		X											

SUBMITTAL REGISTER
(ER 415 1-10)

CONTRACT NO.

TITLE AND LOCATION
CLINIC ADDITION, HILL AFB, UT

CONTRACTOR

SPECIFICATION SECTION
03100

ACTIVITY NO. a.	TRANS-MITTAL NO. b.	ITEM NO. c.	SPECIFICATION PARAGRAPH NUMBER d.	DESCRIPTION OF ITEM SUBMITTED e.	TYPE OF SUBMITTAL: DATA f.	DRAWINGS g.	INSTRUCTIONS h.	SCHEDULES i.	STATEMENTS j.	REPORTS k.	CERTIFICATES l.	SAMPLES m.	RECORDS n.	O&M MANUALS o.	CLASSIFICATION: INFORMATION ONLY p.	GOVERNMENT APPROVED q.	REVIEWER r.	CONTRACTOR SCHEDULE DATES: SUBMIT s.	APPROVAL NEEDED BY t.	MATERIAL NEEDED BY u.	CONTRACTOR ACTION: CODE v.	DATE w.	SUBMIT TO GOVERN-MENT x.	GOVERNMENT ACTION: CODE y.	DATE z.	REMARKS aa.
			1.3	Design	X											X										
			1.2	Concrete Formwork	X										X											
			1.2	Concrete Formwork		X									X											
			2.1.7	Form Releasing Agents			X								X											

SUBMITTAL REGISTER
(ER 415 1-10)

CONTRACT NO.

TITLE AND LOCATION
CLINIC ADDITION, HILL AFB, UT

CONTRACTOR

SPECIFICATION SECTION
03200

ACTIVITY NO. a.	TRANS-MITTAL NO. b.	ITEM NO c.	SPECIFICATION PARAGRAPH NUMBER d.	DESCRIPTION OF ITEM SUBMITTED e.	TYPE OF SUBMITTAL: DATA f.	DRAWINGS g.	INSTRUCTIONS h.	SCHEDULES i.	STATEMENTS j.	REPORTS k.	CERTIFICATES l.	SAMPLES m.	RECORDS n.	O&M MANUALS o.	CLASSIFICATION: INFORMATION ONLY p.	GOVERNMENT APPROVED q.	REVIEWER r.	CONTRACTOR SCHEDULE DATES: SUBMIT s.	APPROVAL NEEDED BY t.	MATERIAL NEEDED BY u.	CONTRACTOR ACTION: CODE v.	DATE w.	SUBMIT TO GOVERN-MENT x.	GOVERNMENT ACTION: CODE y.	DATE z.	REMARKS aa.
			1.2	Concrete Reinforcement System		X										X										
			1.3	Qualifications					X						X											
			2.3	Reinforcing Steel							X					X										

SUBMITTAL REGISTER
(ER 415 1-10)

CONTRACT NO.

TITLE AND LOCATION
CLINIC ADDITION, HILL AFB, UT

CONTRACTOR

SPECIFICATION SECTION
03250

ACTIVITY NO. a.	TRANS-MITTAL NO. b.	ITEM NO c.	SPECIFICATION PARAGRAPH NUMBER d.	DESCRIPTION OF ITEM SUBMITTED e.	TYPE OF SUBMITTAL: DATA f.	DRAWINGS g.	INSTRUCTIONS h.	SCHEDULES i.	STATEMENTS j.	REPORTS k.	CERTIFICATES l.	SAMPLES m.	RECORDS n.	O&M MANUALS o.	CLASSIFICATION: INFORMATION ONLY p.	GOVERNMENT APPROVED q.	REVIEWER r.	CONTRACTOR SCHEDULE DATES: SUBMIT s.	APPROVAL NEEDED BY t.	MATERIAL NEEDED BY u.	CONTRACTOR ACTION: CODE v.	DATE w.	SUBMIT TO GOVERN-MENT x.	GOVERNMENT ACTION: CODE y.	DATE z.	REMARKS aa.
			2.2	Preformed Expansion Joint Filler	X										X											
			2.3	Sealant	X										X											
			2.2	Preformed Expansion Joint Filler			X								X											
			2.3	Sealant			X								X											
			2.2	Preformed Expansion Joint Filler							X				X											
			2.3	Sealant							X				X											

SUBMITTAL REGISTER
(ER 415 1-10)

CONTRACT NO.

TITLE AND LOCATION
CLINIC ADDITION, HILL AFB, UT

CONTRACTOR

SPECIFICATION SECTION
03300

ACTIVITY NO. a.	TRANS-MITTAL NO. b.	ITEM NO c.	SPECIFICATION PARAGRAPH NUMBER d.	DESCRIPTION OF ITEM SUBMITTED e.	TYPE OF SUBMITTAL: DATA f.	DRAWINGS g.	INSTRUCTIONS h.	SCHEDULES i.	STATEMENTS j.	REPORTS k.	CERTIFICATES l.	SAMPLES m.	RECORDS n.	O&M MANUALS o.	CLASSIFICATION: INFORMATION ONLY p.	GOVERNMENT APPROVED q.	REVIEWER r.	CONTRACTOR SCHEDULE DATES: SUBMIT s.	APPROVAL NEEDED BY t.	MATERIAL NEEDED BY u.	CONTRACTOR ACTION: CODE v.	DATE w.	SUBMIT TO GOVERN-MENT x.	GOVERNMENT ACTION: CODE y.	DATE z.	REMARKS aa.
			1.9	Mixture Proportions					X							X										
			3.17	Testing and Inspection for Contractor						X					X											
				Quality Control																						
			1.5	Qualifications							X				X											

SUBMITTAL REGISTER
(ER 415 1-10)

CONTRACT NO.

TITLE AND LOCATION
CLINIC ADDITION, HILL AFB, UT

CONTRACTOR

SPECIFICATION SECTION
03450

ACTIVITY NO. a.	TRANS-MITTAL NO. b.	ITEM NO c.	SPECIFICATION PARAGRAPH NUMBER d.	DESCRIPTION OF ITEM SUBMITTED e.	TYPE OF SUBMITTAL: DATA f.	DRAWINGS g.	INSTRUCTIONS h.	SCHEDULES i.	STATEMENTS j.	REPORTS k.	CERTIFICATES l.	SAMPLES m.	RECORDS n.	O&M MANUALS o.	CLASSIFICATION: INFORMATION ONLY p.	GOVERNMENT APPROVED q.	REVIEWER r.	CONTRACTOR SCHEDULE DATES: SUBMIT s.	APPROVAL NEEDED BY t.	MATERIAL NEEDED BY u.	CONTRACTOR ACTION: CODE v.	DATE w.	SUBMIT TO GOVERN-MENT x.	GOVERNMENT ACTION: CODE y.	DATE z.	REMARKS aa.
			1.3.5	Calculations	X											X										
			1.4	Mix Design	X											X										
			1.4	Architectural Concrete System		X									X											
			2.1	Materials						X					X											
			2.2	Precast Concrete Units								X			X											
			1.4	Manufacturer's Qualifications									X		X											

SUBMITTAL REGISTER
(ER 415 1-10)

CONTRACT NO.

TITLE AND LOCATION
CLINIC ADDITION, HILL AFB, UT

CONTRACTOR

SPECIFICATION SECTION
04200

ACTIVITY NO. a.	TRANS-MITTAL NO. b.	ITEM NO c.	SPECIFICATION PARAGRAPH NUMBER d.	DESCRIPTION OF ITEM SUBMITTED e.	TYPE OF SUBMITTAL: DATA f.	DRAWINGS g.	INSTRUCTIONS h.	SCHEDULES i.	STATEMENTS j.	REPORTS k.	CERTIFICATES l.	SAMPLES m.	RECORDS n.	O&M MANUALS o.	CLASSIFICATION: INFORMATION ONLY p.	GOVERNMENT APPROVED q.	REVIEWER r.	CONTRACTOR SCHEDULE DATES: SUBMIT s.	APPROVAL NEEDED BY t.	MATERIAL NEEDED BY u.	CONTRACTOR ACTION: CODE v.	DATE w.	SUBMIT TO GOVERN-MENT x.	GOVERNMENT ACTION: CODE y.	DATE z.	REMARKS aa.
			1.2	Masonry Work		X									X											
			3.1.2	Cold Weather Installation					X						X											
			3.26.3	Efflorescence Test						X					X											
			3.26.1	Field Testing of Mortar						X					X											
			3.26.2	Field Testing of Grout						X					X											
			2.4.3	Fire-rated CMU						X					X											
			1.2	Special Inspection						X					X											
			2.4	Concrete Masonry Units (CMU)							X				X											
			2.15	Control Joint Keys							X				X											
			2.12	Anchors, Ties, and Bar Positioners							X				X											
			2.16	Expansion-Joint Materials							X				X											
			2.13	Joint Reinforcement							X				X											
			2.14	Reinforcing Steel Bars and Rods							X				X											
			2.17	Insulation							X				X		FIO									
			2.17	Insulation							X				X		FIO									
			1.2	Grout Admixtures							X				X											
			2.6	Glass Block Units and Accessories							X				X											
			2.4	Concrete Masonry Units (CMU)								X			X											
			2.6	Glass Block Units and Accessories								X			X											
			2.12	Anchors, Ties, and Bar Positioners								X			X											
			1.2	Expansion-Joint Material								X			X											
			2.13	Joint Reinforcement								X			X											
			2.17	Insulation								X			X											

SUBMITTAL REGISTER
(ER 415 1-10)

CONTRACT NO.

TITLE AND LOCATION
CLINIC ADDITION, HILL AFB, UT

CONTRACTOR

SPECIFICATION SECTION
05120

ACTIVITY NO. a.	TRANS-MITTAL NO. b.	ITEM NO c.	SPECIFICATION PARAGRAPH NUMBER d.	DESCRIPTION OF ITEM SUBMITTED e.	TYPE OF SUBMITTAL: DATA f.	DRAWINGS g.	INSTRUCTIONS h.	SCHEDULES i.	STATEMENTS j.	REPORTS k.	CERTIFICATES l.	SAMPLES m.	RECORDS n.	O&M MANUALS o.	CLASSIFICATION: INFORMATION ONLY p.	GOVERNMENT APPROVED q.	REVIEWER r.	CONTRACTOR SCHEDULE DATES: SUBMIT s.	APPROVAL NEEDED BY t.	MATERIAL NEEDED BY u.	CONTRACTOR ACTION: CODE v.	DATE w.	SUBMIT TO GOVERN-MENT x.	GOVERNMENT ACTION: CODE y.	DATE z.	REMARKS aa.
			1.3	Structural Steel System		X										X										
			1.3	Structural Connections		X										X										
			3.2	Erection					X						X											
			1.3	Mill Test Reports							X				X											
			1.3	Welder Qualifications							X				X											
			3.1	Fabrication							X				X											
			1.3	Carbon Steel Bolts and Nuts								X			X											
			2.7	Nuts Dimensional Style								X			X											
			2.8	Washers								X			X											

SUBMITTAL REGISTER
(ER 415 1-10)

CONTRACT NO.

TITLE AND LOCATION
CLINIC ADDITION, HILL AFB, UT

CONTRACTOR

SPECIFICATION SECTION
05210

ACTIVITY NO. a.	TRANS-MITTAL NO. b.	ITEM NO c.	SPECIFICATION PARAGRAPH NUMBER d.	DESCRIPTION OF ITEM SUBMITTED e.	TYPE OF SUBMITTAL: DATA f.	DRAWINGS g.	INSTRUCTIONS h.	SCHEDULES i.	STATEMENTS j.	REPORTS k.	CERTIFICATES l.	SAMPLES m.	RECORDS n.	O&M MANUALS o.	CLASSIFICATION: INFORMATION ONLY p.	GOVERNMENT APPROVED q.	REVIEWER r.	CONTRACTOR SCHEDULE DATES: SUBMIT s.	APPROVAL NEEDED BY t.	MATERIAL NEEDED BY u.	CONTRACTOR ACTION: CODE v.	DATE w.	SUBMIT TO GOVERN-MENT x.	GOVERNMENT ACTION: CODE y.	DATE z.	REMARKS aa.
			1.2	Steel Joists		X									X											
			1.2	Steel Joists							X				X											

SUBMITTAL REGISTER
(ER 415 1-10)

CONTRACT NO.

TITLE AND LOCATION
CLINIC ADDITION, HILL AFB, UT

CONTRACTOR

SPECIFICATION SECTION
05300

ACTIVITY NO. a.	TRANS-MITTAL NO. b.	ITEM NO c.	SPECIFICATION PARAGRAPH NUMBER d.	DESCRIPTION OF ITEM SUBMITTED e.	TYPE OF SUBMITTAL: DATA f.	DRAWINGS g.	INSTRUCTIONS h.	SCHEDULES i.	STATEMENTS j.	REPORTS k.	CERTIFICATES l.	SAMPLES m.	RECORDS n.	O&M MANUALS o.	CLASSIFICATION: INFORMATION ONLY p.	GOVERNMENT APPROVED q.	REVIEWER r.	CONTRACTOR SCHEDULE DATES: SUBMIT s.	APPROVAL NEEDED BY t.	MATERIAL NEEDED BY u.	CONTRACTOR ACTION: CODE v.	DATE w.	SUBMIT TO GOVERN-MENT x.	GOVERNMENT ACTION: CODE y.	DATE z.	REMARKS aa.
			2.1	Deck Units	X										X											
			2.1	Deck Units		X									X											
			2.5	Accessories		X									X											
			3.3	Attachments		X									X											
			3.4	Holes and Openings		X									X											
			2.1	Deck Units							X				X											
			3.3	Attachments							X				X											
			2.1	Deck Units								X			X											
			2.5	Accessories								X			X											
			3.3	Attachments									X		X											

SUBMITTAL REGISTER
(ER 415 1-10)

CONTRACT NO.

TITLE AND LOCATION
CLINIC ADDITION, HILL AFB, UT

CONTRACTOR

SPECIFICATION SECTION
05400

ACTIVITY NO. a.	TRANS-MITTAL NO. b.	ITEM NO c.	SPECIFICATION PARAGRAPH NUMBER d.	DESCRIPTION OF ITEM SUBMITTED e.	TYPE OF SUBMITTAL: DATA f.	DRAWINGS g.	INSTRUCTIONS h.	SCHEDULES i.	STATEMENTS j.	REPORTS k.	CERTIFICATES l.	SAMPLES m.	RECORDS n.	O&M MANUALS o.	CLASSIFICATION: INFORMATION ONLY p.	GOVERNMENT APPROVED q.	REVIEWER r.	CONTRACTOR SCHEDULE DATES: SUBMIT s.	APPROVAL NEEDED BY t.	MATERIAL NEEDED BY u.	CONTRACTOR ACTION: CODE v.	DATE w.	SUBMIT TO GOVERN-MENT x.	GOVERNMENT ACTION: CODE y.	DATE z.	REMARKS aa.
			1.2	Studs and joists	X										X											
			1.2	Metal framing calculations	X										X											
			1.2	Framing drawings		X									X											

SUBMITTAL REGISTER
(ER 415 1-10)

CONTRACT NO.

TITLE AND LOCATION
CLINIC ADDITION, HILL AFB, UT

CONTRACTOR

SPECIFICATION SECTION
05500

ACTIVITY NO. a.	TRANS-MITTAL NO. b.	ITEM NO c.	SPECIFICATION PARAGRAPH NUMBER d.	DESCRIPTION OF ITEM SUBMITTED e.	TYPE OF SUBMITTAL: DATA f.	DRAWINGS g.	INSTRUCTIONS h.	SCHEDULES i.	STATEMENTS j.	REPORTS k.	CERTIFICATES l.	SAMPLES m.	RECORDS n.	O&M MANUALS o.	CLASSIFICATION: INFORMATION ONLY p.	GOVERNMENT APPROVED q.	REVIEWER r.	CONTRACTOR SCHEDULE DATES: SUBMIT s.	APPROVAL NEEDED BY t.	MATERIAL NEEDED BY u.	CONTRACTOR ACTION: CODE v.	DATE w.	SUBMIT TO GOVERN-MENT x.	GOVERNMENT ACTION: CODE y.	DATE z.	REMARKS aa.
			1.2	Miscellaneous Metal Items		X									X											
			1.2	Miscellaneous Metal Items								X			X											

SUBMITTAL REGISTER
(ER 415 1-10)

CONTRACT NO.

TITLE AND LOCATION
CLINIC ADDITION, HILL AFB, UT

CONTRACTOR

SPECIFICATION SECTION
06100

ACTIVITY NO. a.	TRANS-MITTAL NO. b.	ITEM NO c.	SPECIFICATION PARAGRAPH NUMBER d.	DESCRIPTION OF ITEM SUBMITTED e.	TYPE OF SUBMITTAL: DATA f.	DRAWINGS g.	INSTRUCTIONS h.	SCHEDULES i.	STATEMENTS j.	REPORTS k.	CERTIFICATES l.	SAMPLES m.	RECORDS n.	O&M MANUALS o.	CLASSIFICATION: INFORMATION ONLY p.	GOVERNMENT APPROVED q.	REVIEWER r.	CONTRACTOR SCHEDULE DATES: SUBMIT s.	APPROVAL NEEDED BY t.	MATERIAL NEEDED BY u.	CONTRACTOR ACTION: CODE v.	DATE w.	SUBMIT TO GOVERN-MENT x.	GOVERNMENT ACTION: CODE y.	DATE z.	REMARKS aa.
			2.1.1	Grading and Marking							X				X											

SUBMITTAL REGISTER
(ER 415 1-10)

CONTRACT NO.

TITLE AND LOCATION
CLINIC ADDITION, HILL AFB, UT

CONTRACTOR

SPECIFICATION SECTION
06200

ACTIVITY NO. a.	TRANS-MITTAL NO. b.	ITEM NO. c.	SPECIFICATION PARAGRAPH NUMBER d.	DESCRIPTION OF ITEM SUBMITTED e.	TYPE OF SUBMITTAL: DATA f.	DRAWINGS g.	INSTRUCTIONS h.	SCHEDULES i.	STATEMENTS j.	REPORTS k.	CERTIFICATES l.	SAMPLES m.	RECORDS n.	O&M MANUALS o.	CLASSIFICATION: INFORMATION ONLY p.	GOVERNMENT APPROVED q.	REVIEWER r.	CONTRACTOR SCHEDULE DATES: SUBMIT s.	APPROVAL NEEDED BY t.	MATERIAL NEEDED BY u.	CONTRACTOR ACTION: CODE v.	DATE w.	SUBMIT TO GOVERN-MENT x.	GOVERNMENT ACTION: CODE y.	DATE z.	REMARKS aa.
			1.2	Finish Carpentry		X									X											

SUBMITTAL REGISTER
(ER 415 1-10)

CONTRACT NO.

TITLE AND LOCATION
CLINIC ADDITION, HILL AFB, UT

CONTRACTOR

SPECIFICATION SECTION
06410

ACTIVITY NO. a.	TRANS-MITTAL NO. b.	ITEM NO c.	SPECIFICATION PARAGRAPH NUMBER d.	DESCRIPTION OF ITEM SUBMITTED e.	TYPE OF SUBMITTAL: DATA f.	DRAWINGS g.	INSTRUCTIONS h.	SCHEDULES i.	STATEMENTS j.	REPORTS k.	CERTIFICATES l.	SAMPLES m.	RECORDS n.	O&M MANUALS o.	CLASSIFICATION: INFORMATION ONLY p.	GOVERNMENT APPROVED q.	REVIEWER r.	CONTRACTOR SCHEDULE DATES: SUBMIT s.	APPROVAL NEEDED BY t.	MATERIAL NEEDED BY u.	CONTRACTOR ACTION: CODE v.	DATE w.	SUBMIT TO GOVERN-MENT x.	GOVERNMENT ACTION: CODE y.	DATE z.	REMARKS aa.
			1.3	Catalog Data	X										X											
			1.3	Drawings		X									X											
			1.3	Certificates							X				X											
			1.3	Plastic Laminates								X			X											

SUBMITTAL REGISTER
(ER 415 1-10)

CONTRACT NO.

TITLE AND LOCATION
CLINIC ADDITION, HILL AFB, UT

CONTRACTOR

SPECIFICATION SECTION
07160

ACTIVITY NO. a.	TRANS-MITTAL NO. b.	ITEM NO. c.	SPECIFICATION PARAGRAPH NUMBER d.	DESCRIPTION OF ITEM SUBMITTED e.	TYPE OF SUBMITTAL: DATA f.	DRAWINGS g.	INSTRUCTIONS h.	SCHEDULES i.	STATEMENTS j.	REPORTS k.	CERTIFICATES l.	SAMPLES m.	RECORDS n.	O&M MANUALS o.	CLASSIFICATION: INFORMATION ONLY p.	GOVERNMENT APPROVED q.	REVIEWER r.	CONTRACTOR SCHEDULE DATES: SUBMIT s.	APPROVAL NEEDED BY t.	MATERIAL NEEDED BY u.	CONTRACTOR ACTION: CODE v.	DATE w.	SUBMIT TO GOVERN-MENT x.	GOVERNMENT ACTION: CODE y.	DATE z.	REMARKS aa.
			1.2	Materials							X				X											

SUBMITTAL REGISTER
(ER 415 1-10)

CONTRACT NO.

TITLE AND LOCATION
CLINIC ADDITION, HILL AFB, UT

CONTRACTOR

SPECIFICATION SECTION
07212

ACTIVITY NO. a.	TRANS-MITTAL NO. b.	ITEM NO c.	SPECIFICATION PARAGRAPH NUMBER d.	DESCRIPTION OF ITEM SUBMITTED e.	TYPE OF SUBMITTAL: DATA f.	DRAWINGS g.	INSTRUCTIONS h.	SCHEDULES i.	STATEMENTS j.	REPORTS k.	CERTIFICATES l.	SAMPLES m.	RECORDS n.	O&M MANUALS o.	CLASSIFICATION: INFORMATION ONLY p.	GOVERNMENT APPROVED q.	REVIEWER r.	CONTRACTOR SCHEDULE DATES: SUBMIT s.	APPROVAL NEEDED BY t.	MATERIAL NEEDED BY u.	CONTRACTOR ACTION: CODE v.	DATE w.	SUBMIT TO GOVERN-MENT x.	GOVERNMENT ACTION: CODE y.	DATE z.	REMARKS aa.
			2.1	Blanket insulation	X										X											
			3.3.1	Blanket insulation	X										X											
			2.2	Sill sealer insulation	X										X											
			2.4	Vapor retarder	X										X											
			2.5	Pressure sensitive tape	X										X											
			2.6	Accessories	X										X											
			1.2	Application of Insulation			X								X											

SUBMITTAL REGISTER
(ER 415 1-10)

CONTRACT NO.

TITLE AND LOCATION
CLINIC ADDITION, HILL AFB, UT

CONTRACTOR

SPECIFICATION SECTION
07220

ACTIVITY NO. a.	TRANS-MITTAL NO. b.	ITEM NO. c.	SPECIFICATION PARAGRAPH NUMBER d.	DESCRIPTION OF ITEM SUBMITTED e.	TYPE OF SUBMITTAL: DATA f.	DRAWINGS g.	INSTRUCTIONS h.	SCHEDULES i.	STATEMENTS j.	REPORTS k.	CERTIFICATES l.	SAMPLES m.	RECORDS n.	O&M MANUALS o.	CLASSIFICATION: INFORMATION ONLY p.	GOVERNMENT APPROVED q.	REVIEWER r.	CONTRACTOR SCHEDULE DATES: SUBMIT s.	APPROVAL NEEDED BY t.	MATERIAL NEEDED BY u.	CONTRACTOR ACTION: CODE v.	DATE w.	SUBMIT TO GOVERN-MENT x.	GOVERNMENT ACTION: CODE y.	DATE z.	REMARKS aa.
			3.7	Application of Insulation			X								X											
			1.2	Inspection					X						X											
			2.2	Insulation							X				X											

SUBMITTAL REGISTER
(ER 415 1-10)

CONTRACT NO.

TITLE AND LOCATION
CLINIC ADDITION, HILL AFB, UT

CONTRACTOR

SPECIFICATION SECTION
07250

ACTIVITY NO. a.	TRANS-MITTAL NO. b.	ITEM NO c.	SPECIFICATION PARAGRAPH NUMBER d.	DESCRIPTION OF ITEM SUBMITTED e.	TYPE OF SUBMITTAL: DATA f.	DRAWINGS g.	INSTRUCTIONS h.	SCHEDULES i.	STATEMENTS j.	REPORTS k.	CERTIFICATES l.	SAMPLES m.	RECORDS n.	O&M MANUALS o.	CLASSIFICATION: INFORMATION ONLY p.	GOVERNMENT APPROVED q.	REVIEWER r.	CONTRACTOR SCHEDULE DATES: SUBMIT s.	APPROVAL NEEDED BY t.	MATERIAL NEEDED BY u.	CONTRACTOR ACTION: CODE v.	DATE w.	SUBMIT TO GOVERN-MENT x.	GOVERNMENT ACTION: CODE y.	DATE z.	REMARKS aa.
			1.2	Fireproofing Material	X										X											
			1.2	UL Test Assembly						X					X											
			3.5	Field Tests						X					X											
			1.5	Installer Qualifications							X				X											
			1.2	Surface Acceptability							X				X											
			3.5.3	Manufacturer's Inspection							X				X											
			1.2	Spray-Applied Fireproofing								X			X											

SUBMITTAL REGISTER
(ER 415 1-10)

CONTRACT NO.

TITLE AND LOCATION
CLINIC ADDITION, HILL AFB, UT

CONTRACTOR

SPECIFICATION SECTION
07270

ACTIVITY NO. a.	TRANS-MITTAL NO. b.	ITEM NO c.	SPECIFICATION PARAGRAPH NUMBER d.	DESCRIPTION OF ITEM SUBMITTED e.	TYPE OF SUBMITTAL: DATA f.	DRAWINGS g.	INSTRUCTIONS h.	SCHEDULES i.	STATEMENTS j.	REPORTS k.	CERTIFICATES l.	SAMPLES m.	RECORDS n.	O&M MANUALS o.	CLASSIFICATION: INFORMATION ONLY p.	GOVERNMENT APPROVED q.	REVIEWER r.	CONTRACTOR SCHEDULE DATES: SUBMIT s.	APPROVAL NEEDED BY t.	MATERIAL NEEDED BY u.	CONTRACTOR ACTION: CODE v.	DATE w.	SUBMIT TO GOVERN-MENT x.	GOVERNMENT ACTION: CODE y.	DATE z.	REMARKS aa.
			2.1	Firestopping Materials		X										X										
			2.1	Firestopping Materials							X				X											
			1.6	Installer Qualifications							X				X											
			1.5	Inspection							X				X											

SUBMITTAL REGISTER
(ER 415 1-10)

CONTRACT NO.

TITLE AND LOCATION
CLINIC ADDITION, HILL AFB, UT

CONTRACTOR

SPECIFICATION SECTION
07535

ACTIVITY NO. a.	TRANS-MITTAL NO. b.	ITEM NO c.	SPECIFICATION PARAGRAPH NUMBER d.	DESCRIPTION OF ITEM SUBMITTED e.	TYPE OF SUBMITTAL: DATA f.	DRAWINGS g.	INSTRUCTIONS h.	SCHEDULES i.	STATEMENTS j.	REPORTS k.	CERTIFICATES l.	SAMPLES m.	RECORDS n.	O&M MANUALS o.	CLASSIFICATION: INFORMATION ONLY p.	GOVERNMENT APPROVED q.	REVIEWER r.	CONTRACTOR SCHEDULE DATES: SUBMIT s.	APPROVAL NEEDED BY t.	MATERIAL NEEDED BY u.	CONTRACTOR ACTION: CODE v.	DATE w.	SUBMIT TO GOVERN-MENT x.	GOVERNMENT ACTION: CODE y.	DATE z.	REMARKS aa.
			1.3	Materials and Installation			X									X										
			1.3	Qualifications							X				X											
			1.3	Materials							X				X											

SUBMITTAL REGISTER
(ER 415 1-10)

CONTRACT NO.

TITLE AND LOCATION
CLINIC ADDITION, HILL AFB, UT

CONTRACTOR

SPECIFICATION SECTION
07600

ACTIVITY NO. a.	TRANS-MITTAL NO. b.	ITEM NO. c.	SPECIFICATION PARAGRAPH NUMBER d.	DESCRIPTION OF ITEM SUBMITTED e.	TYPE OF SUBMITTAL: DATA f.	DRAWINGS g.	INSTRUCTIONS h.	SCHEDULES i.	STATEMENTS j.	REPORTS k.	CERTIFICATES l.	SAMPLES m.	RECORDS n.	O&M MANUALS o.	CLASSIFICATION: INFORMATION ONLY p.	GOVERNMENT APPROVED q.	REVIEWER r.	CONTRACTOR SCHEDULE DATES: SUBMIT s.	APPROVAL NEEDED BY t.	MATERIAL NEEDED BY u.	CONTRACTOR ACTION: CODE v.	DATE w.	SUBMIT TO GOVERN-MENT x.	GOVERNMENT ACTION: CODE y.	DATE z.	REMARKS aa.
			2.1	Materials		X									X											

SUBMITTAL REGISTER
(ER 415 1-10)

CONTRACT NO.

TITLE AND LOCATION
CLINIC ADDITION, HILL AFB, UT

CONTRACTOR

SPECIFICATION SECTION
07920

ACTIVITY NO. a.	TRANS-MITTAL NO. b.	ITEM NO c.	SPECIFICATION PARAGRAPH NUMBER d.	DESCRIPTION OF ITEM SUBMITTED e.	TYPE OF SUBMITTAL: DATA f.	DRAWINGS g.	INSTRUCTIONS h.	SCHEDULES i.	STATEMENTS j.	REPORTS k.	CERTIFICATES l.	SAMPLES m.	RECORDS n.	O&M MANUALS o.	CLASSIFICATION: INFORMATION ONLY p.	GOVERNMENT APPROVED q.	REVIEWER r.	CONTRACTOR SCHEDULE DATES: SUBMIT s.	APPROVAL NEEDED BY t.	MATERIAL NEEDED BY u.	CONTRACTOR ACTION: CODE v.	DATE w.	SUBMIT TO GOVERN-MENT x.	GOVERNMENT ACTION: CODE y.	DATE z.	REMARKS aa.
			1.2	Backing	X										X											
			1.2	Bond-Breaker	X										X											
			1.2	Sealant	X										X											
			1.2	Sealant							X				X											

SUBMITTAL REGISTER
(ER 415 1-10)

CONTRACT NO.

TITLE AND LOCATION
CLINIC ADDITION, HILL AFB, UT

CONTRACTOR

SPECIFICATION SECTION
08110

ACTIVITY NO. a.	TRANS-MITTAL NO. b.	ITEM NO c.	SPECIFICATION PARAGRAPH NUMBER d.	DESCRIPTION OF ITEM SUBMITTED e.	TYPE OF SUBMITTAL: DATA f.	DRAWINGS g.	INSTRUCTIONS h.	SCHEDULES i.	STATEMENTS j.	REPORTS k.	CERTIFICATES l.	SAMPLES m.	RECORDS n.	O&M MANUALS o.	CLASSIFICATION: INFORMATION ONLY p.	GOVERNMENT APPROVED q.	REVIEWER r.	CONTRACTOR SCHEDULE DATES: SUBMIT s.	APPROVAL NEEDED BY t.	MATERIAL NEEDED BY u.	CONTRACTOR ACTION: CODE v.	DATE w.	SUBMIT TO GOVERN-MENT x.	GOVERNMENT ACTION: CODE y.	DATE z.	REMARKS aa.
			1.2	Steel Doors and Frames		X									X											
			2.2	Fire Rated Doors						X					X											
			2.2	Fire Rated Doors							X				X											
			2.3	Thermal Insulated Doors							X				X											

SUBMITTAL REGISTER
(ER 415 1-10)

CONTRACT NO.

TITLE AND LOCATION
CLINIC ADDITION, HILL AFB, UT

CONTRACTOR

SPECIFICATION SECTION
08120

ACTIVITY NO. a.	TRANS-MITTAL NO. b.	ITEM NO c.	SPECIFICATION PARAGRAPH NUMBER d.	DESCRIPTION OF ITEM SUBMITTED e.	TYPE OF SUBMITTAL: DATA f.	DRAWINGS g.	INSTRUCTIONS h.	SCHEDULES i.	STATEMENTS j.	REPORTS k.	CERTIFICATES l.	SAMPLES m.	RECORDS n.	O&M MANUALS o.	CLASSIFICATION: INFORMATION ONLY p.	GOVERNMENT APPROVED q.	REVIEWER r.	CONTRACTOR SCHEDULE DATES: SUBMIT s.	APPROVAL NEEDED BY t.	MATERIAL NEEDED BY u.	CONTRACTOR ACTION: CODE v.	DATE w.	SUBMIT TO GOVERN-MENT x.	GOVERNMENT ACTION: CODE y.	DATE z.	REMARKS aa.
			1.4	Aluminum Doors and Frames	X										X											
			1.4	Aluminum Doors and Frames		X									X											
			3.1.2	Installation			X								X											
			1.4	Cleaning			X								X											
			1.4	Full-Glazed and Flush Doors						X					X											
			2.1.1	Finishes								X			X											

SUBMITTAL REGISTER
(ER 415 1-10)

CONTRACT NO.

TITLE AND LOCATION
CLINIC ADDITION, HILL AFB, UT

CONTRACTOR

SPECIFICATION SECTION
08201

ACTIVITY NO. a.	TRANS-MITTAL NO. b.	ITEM NO c.	SPECIFICATION PARAGRAPH NUMBER d.	DESCRIPTION OF ITEM SUBMITTED e.	TYPE OF SUBMITTAL: DATA f.	DRAWINGS g.	INSTRUCTIONS h.	SCHEDULES i.	STATEMENTS j.	REPORTS k.	CERTIFICATES l.	SAMPLES m.	RECORDS n.	O&M MANUALS o.	CLASSIFICATION: INFORMATION ONLY p.	GOVERNMENT APPROVED q.	REVIEWER r.	CONTRACTOR SCHEDULE DATES: SUBMIT s.	APPROVAL NEEDED BY t.	MATERIAL NEEDED BY u.	CONTRACTOR ACTION: CODE v.	DATE w.	SUBMIT TO GOVERN-MENT x.	GOVERNMENT ACTION: CODE y.	DATE z.	REMARKS aa.
			1.3	Wood Doors		X									X											
			3.1.2	Fire Doors			X								X											
			2.4	Fire Rated Doors							X				X											
			1.3	Wood Veneer								X			X											

SUBMITTAL REGISTER
(ER 415 1-10)

CONTRACT NO.

TITLE AND LOCATION
CLINIC ADDITION, HILL AFB, UT

CONTRACTOR

SPECIFICATION SECTION
08353

ACTIVITY NO. a.	TRANS-MITTAL NO. b.	ITEM NO c.	SPECIFICATION PARAGRAPH NUMBER d.	DESCRIPTION OF ITEM SUBMITTED e.	TYPE OF SUBMITTAL: DATA f.	DRAWINGS g.	INSTRUCTIONS h.	SCHEDULES i.	STATEMENTS j.	REPORTS k.	CERTIFICATES l.	SAMPLES m.	RECORDS n.	O&M MANUALS o.	CLASSIFICATION: INFORMATION ONLY p.	GOVERNMENT APPROVED q.	REVIEWER r.	CONTRACTOR SCHEDULE DATES: SUBMIT s.	APPROVAL NEEDED BY t.	MATERIAL NEEDED BY u.	CONTRACTOR ACTION: CODE v.	DATE w.	SUBMIT TO GOVERN-MENT x.	GOVERNMENT ACTION: CODE y.	DATE z.	REMARKS aa.
			2.4	Operable Partitions	X										X											
			2.4	Operable Partitions		X									X											
			1.2	Materials							X				X											
			2.4	Operable Partitions							X				X											
			2.4	Operable Partitions								X			X											
			2.4	Operable Partitions										X	X											

SUBMITTAL REGISTER
(ER 415 1-10)

CONTRACT NO.

TITLE AND LOCATION
CLINIC ADDITION, HILL AFB, UT

CONTRACTOR

SPECIFICATION SECTION
08700

ACTIVITY NO. a.	TRANS-MITTAL NO. b.	ITEM NO. c.	SPECIFICATION PARAGRAPH NUMBER d.	DESCRIPTION OF ITEM SUBMITTED e.	TYPE OF SUBMITTAL: DATA f.	DRAWINGS g.	INSTRUCTIONS h.	SCHEDULES i.	STATEMENTS j.	REPORTS k.	CERTIFICATES l.	SAMPLES m.	RECORDS n.	O&M MANUALS o.	CLASSIFICATION: INFORMATION ONLY p.	GOVERNMENT APPROVED q.	REVIEWER r.	CONTRACTOR SCHEDULE DATES: SUBMIT s.	APPROVAL NEEDED BY t.	MATERIAL NEEDED BY u.	CONTRACTOR ACTION: CODE v.	DATE w.	SUBMIT TO GOVERN-MENT x.	GOVERNMENT ACTION: CODE y.	DATE z.	REMARKS aa.
			1.2	Hardware and Accessories	X										X											
			1.2	Hardware Devices		X										X										
			1.2	Hardware Schedule				X							X											
			1.2	Keying Schedule				X								X										
			1.2	Hardware and Accessories							X				X											
			1.2	Hardware and Accessories										X	X											

SUBMITTAL REGISTER
(ER 415 1-10)

CONTRACT NO.

TITLE AND LOCATION
CLINIC ADDITION, HILL AFB, UT

CONTRACTOR

SPECIFICATION SECTION
08810

ACTIVITY NO. a.	TRANS-MITTAL NO. b.	ITEM NO. c.	SPECIFICATION PARAGRAPH NUMBER d.	DESCRIPTION OF ITEM SUBMITTED e.	TYPE OF SUBMITTAL: DATA f.	DRAWINGS g.	INSTRUCTIONS h.	SCHEDULES i.	STATEMENTS j.	REPORTS k.	CERTIFICATES l.	SAMPLES m.	RECORDS n.	O&M MANUALS o.	CLASSIFICATION: INFORMATION ONLY p.	GOVERNMENT APPROVED q.	REVIEWER r.	CONTRACTOR SCHEDULE DATES: SUBMIT s.	APPROVAL NEEDED BY t.	MATERIAL NEEDED BY u.	CONTRACTOR ACTION: CODE v.	DATE w.	SUBMIT TO GOVERN-MENT x.	GOVERNMENT ACTION: CODE y.	DATE z.	REMARKS aa.
			1.2	Glass	X										X											
			1.2	Glazing Accessories	X										X											
			1.2	Glazing Materials and Accessories		X									X											
			1.2	Control Tower Glazing Units		X									X											
			1.2	Glass							X				X											
			1.2	Glass								X			X											

SUBMITTAL REGISTER
(ER 415 1-10)

CONTRACT NO.

TITLE AND LOCATION
CLINIC ADDITION, HILL AFB, UT

CONTRACTOR

SPECIFICATION SECTION
08900

ACTIVITY NO. a.	TRANS-MITTAL NO. b.	ITEM NO c.	SPECIFICATION PARAGRAPH NUMBER d.	DESCRIPTION OF ITEM SUBMITTED e.	TYPE OF SUBMITTAL: DATA f.	DRAWINGS g.	INSTRUCTIONS h.	SCHEDULES i.	STATEMENTS j.	REPORTS k.	CERTIFICATES l.	SAMPLES m.	RECORDS n.	O&M MANUALS o.	CLASSIFICATION: INFORMATION ONLY p.	GOVERNMENT APPROVED q.	REVIEWER r.	CONTRACTOR SCHEDULE DATES: SUBMIT s.	APPROVAL NEEDED BY t.	MATERIAL NEEDED BY u.	CONTRACTOR ACTION: CODE v.	DATE w.	SUBMIT TO GOVERN-MENT x.	GOVERNMENT ACTION: CODE y.	DATE z.	REMARKS aa.
			1.2	Insulated Translucent Panel System	X										X											
			1.2	Calculations	X										X											
			1.2	Insulated translucent panel system		X									X											
			1.2	Manufacturer's Qualifications					X						X											
			1.2	Installer's Qualifications					X						X											
			1.2	Deflection and structural tests											X											
			1.2	Water penetration tests											X											
			1.2	Air infiltration tests											X											
			1.2	Delamination tests											X											
			1.2	Thermal conductance tests											X											
			1.2	Fire resistance test											X											
			1.2	Corner section of translucent panel								X			X											
				system																						
			1.2	Accessories								X			X											

SUBMITTAL REGISTER
(ER 415 1-10)

CONTRACT NO.

TITLE AND LOCATION
CLINIC ADDITION, HILL AFB, UT

CONTRACTOR

SPECIFICATION SECTION
09200

ACTIVITY NO. a.	TRANS-MITTAL NO. b.	ITEM NO c.	SPECIFICATION PARAGRAPH NUMBER d.	DESCRIPTION OF ITEM SUBMITTED e.	TYPE OF SUBMITTAL: DATA f.	DRAWINGS g.	INSTRUCTIONS h.	SCHEDULES i.	STATEMENTS j.	REPORTS k.	CERTIFICATES l.	SAMPLES m.	RECORDS n.	O&M MANUALS o.	CLASSIFICATION: INFORMATION ONLY p.	GOVERNMENT APPROVED q.	REVIEWER r.	CONTRACTOR SCHEDULE DATES: SUBMIT s.	APPROVAL NEEDED BY t.	MATERIAL NEEDED BY u.	CONTRACTOR ACTION: CODE v.	DATE w.	SUBMIT TO GOVERN-MENT x.	GOVERNMENT ACTION: CODE y.	DATE z.	REMARKS aa.
			1.2	Plastering Materials and Accessories	X										X											
			1.2	Lath and Plaster		X									X											
			1.2	Plaster								X			X											

SUBMITTAL REGISTER
(ER 415 1-10)

CONTRACT NO.

TITLE AND LOCATION
CLINIC ADDITION, HILL AFB, UT

CONTRACTOR

SPECIFICATION SECTION
09214

ACTIVITY NO. a.	TRANS-MITTAL NO. b.	ITEM NO. c.	SPECIFICATION PARAGRAPH NUMBER d.	DESCRIPTION OF ITEM SUBMITTED e.	TYPE OF SUBMITTAL: DATA f.	DRAWINGS g.	INSTRUCTIONS h.	SCHEDULES i.	STATEMENTS j.	REPORTS k.	CERTIFICATES l.	SAMPLES m.	RECORDS n.	O&M MANUALS o.	CLASSIFICATION: INFORMATION ONLY p.	GOVERNMENT APPROVED q.	REVIEWER r.	CONTRACTOR SCHEDULE DATES: SUBMIT s.	APPROVAL NEEDED BY t.	MATERIAL NEEDED BY u.	CONTRACTOR ACTION: CODE v.	DATE w.	SUBMIT TO GOVERN-MENT x.	GOVERNMENT ACTION: CODE y.	DATE z.	REMARKS aa.
			1.2	Prefabricated Glass Reinforced	X										X											
				Cement Members																						
			1.2	Prefabricated Glass Reinforced		X										X										
				Cement Members																						
			1.2	Prefabricated Glass Reinforced							X				X											
				Cement Members																						
			1.2	Prefabricated Glass Reinforced								X				X										
				Cement Members																						

SUBMITTAL REGISTER
(ER 415 1-10)

CONTRACT NO.

TITLE AND LOCATION
CLINIC ADDITION, HILL AFB, UT

CONTRACTOR

SPECIFICATION SECTION
09250

ACTIVITY NO. a.	TRANS-MITTAL NO. b.	ITEM NO. c.	SPECIFICATION PARAGRAPH NUMBER d.	DESCRIPTION OF ITEM SUBMITTED e.	TYPE OF SUBMITTAL: DATA f.	DRAWINGS g.	INSTRUCTIONS h.	SCHEDULES i.	STATEMENTS j.	REPORTS k.	CERTIFICATES l.	SAMPLES m.	RECORDS n.	O&M MANUALS o.	CLASSIFICATION: INFORMATION ONLY p.	GOVERNMENT APPROVED q.	REVIEWER r.	CONTRACTOR SCHEDULE DATES: SUBMIT s.	APPROVAL NEEDED BY t.	MATERIAL NEEDED BY u.	CONTRACTOR ACTION: CODE v.	DATE w.	SUBMIT TO GOVERN-MENT x.	GOVERNMENT ACTION: CODE y.	DATE z.	REMARKS aa.
			1.3	Steel Framing		X									X											
			1.3	Control Joints		X									X											
			3.6	Fire-Resistant Assemblies		X									X											
			1.3	Gypsum Wallboard							X				X											
			2.4.3	Water-Resistant Gypsum Board							X				X											
			1.3	Steel Framing							X				X											

SUBMITTAL REGISTER
(ER 415 1-10)

CONTRACT NO.

TITLE AND LOCATION
CLINIC ADDITION, HILL AFB, UT

CONTRACTOR

SPECIFICATION SECTION
09310

ACTIVITY NO. a.	TRANS-MITTAL NO. b.	ITEM NO c.	SPECIFICATION PARAGRAPH NUMBER d.	DESCRIPTION OF ITEM SUBMITTED e.	TYPE OF SUBMITTAL: DATA f.	DRAWINGS g.	INSTRUCTIONS h.	SCHEDULES i.	STATEMENTS j.	REPORTS k.	CERTIFICATES l.	SAMPLES m.	RECORDS n.	O&M MANUALS o.	CLASSIFICATION: INFORMATION ONLY p.	GOVERNMENT APPROVED q.	REVIEWER r.	CONTRACTOR SCHEDULE DATES: SUBMIT s.	APPROVAL NEEDED BY t.	MATERIAL NEEDED BY u.	CONTRACTOR ACTION: CODE v.	DATE w.	SUBMIT TO GOVERN-MENT x.	GOVERNMENT ACTION: CODE y.	DATE z.	REMARKS aa.
			2.1	Tile	X										X											
			2.2	Setting-Bed	X										X											
			2.4	Mortar, Grout, and Adhesive	X										X											
			2.1	Tile			X								X											
			1.2	Mortar and Grout			X								X											
			1.2	Testing						X					X											
			2.1	Tile							X				X											
			2.4	Mortar, Grout, and Adhesive							X				X											
			2.1	Tile								X			X											
			1.2	Accessories								X			X											
			2.5	Marble Thresholds								X			X											

SUBMITTAL REGISTER
(ER 415 1-10)

CONTRACT NO.

TITLE AND LOCATION
CLINIC ADDITION, HILL AFB, UT

CONTRACTOR

SPECIFICATION SECTION
09510

ACTIVITY NO. a.	TRANS-MITTAL NO. b.	ITEM NO c.	SPECIFICATION PARAGRAPH NUMBER d.	DESCRIPTION OF ITEM SUBMITTED e.	TYPE OF SUBMITTAL: DATA f.	DRAWINGS g.	INSTRUCTIONS h.	SCHEDULES i.	STATEMENTS j.	REPORTS k.	CERTIFICATES l.	SAMPLES m.	RECORDS n.	O&M MANUALS o.	CLASSIFICATION: INFORMATION ONLY p.	GOVERNMENT APPROVED q.	REVIEWER r.	CONTRACTOR SCHEDULE DATES: SUBMIT s.	APPROVAL NEEDED BY t.	MATERIAL NEEDED BY u.	CONTRACTOR ACTION: CODE v.	DATE w.	SUBMIT TO GOVERN-MENT x.	GOVERNMENT ACTION: CODE y.	DATE z.	REMARKS aa.
			1.3	Acoustical Ceiling System	X										X											
			1.3	Acoustical Ceiling System		X									X											
			2.1	Acoustical Units								X			X											

SUBMITTAL REGISTER
(ER 415 1-10)

CONTRACT NO.

TITLE AND LOCATION
CLINIC ADDITION, HILL AFB, UT

CONTRACTOR

SPECIFICATION SECTION
09650

ACTIVITY NO. a.	TRANS-MITTAL NO. b.	ITEM NO c.	SPECIFICATION PARAGRAPH NUMBER d.	DESCRIPTION OF ITEM SUBMITTED e.	TYPE OF SUBMITTAL: DATA f.	DRAWINGS g.	INSTRUCTIONS h.	SCHEDULES i.	STATEMENTS j.	REPORTS k.	CERTIFICATES l.	SAMPLES m.	RECORDS n.	O&M MANUALS o.	CLASSIFICATION: INFORMATION ONLY p.	GOVERNMENT APPROVED q.	REVIEWER r.	CONTRACTOR SCHEDULE DATES: SUBMIT s.	APPROVAL NEEDED BY t.	MATERIAL NEEDED BY u.	CONTRACTOR ACTION: CODE v.	DATE w.	SUBMIT TO GOVERN-MENT x.	GOVERNMENT ACTION: CODE y.	DATE z.	REMARKS aa.
			1.2	Resilient Flooring and Accessories	X										X											
			1.2	Resilient Flooring and Accessories						X					X											
			1.2	Resilient Flooring and Accessories								X			X											

SUBMITTAL REGISTER
(ER 415 1-10)

CONTRACT NO.

TITLE AND LOCATION
CLINIC ADDITION, HILL AFB, UT

CONTRACTOR

SPECIFICATION SECTION
09680

ACTIVITY NO. a.	TRANS-MITTAL NO. b.	ITEM NO c.	SPECIFICATION PARAGRAPH NUMBER d.	DESCRIPTION OF ITEM SUBMITTED e.	TYPE OF SUBMITTAL: DATA f.	DRAWINGS g.	INSTRUCTIONS h.	SCHEDULES i.	STATEMENTS j.	REPORTS k.	CERTIFICATES l.	SAMPLES m.	RECORDS n.	O&M MANUALS o.	CLASSIFICATION: INFORMATION ONLY p.	GOVERNMENT APPROVED q.	REVIEWER r.	CONTRACTOR SCHEDULE DATES: SUBMIT s.	APPROVAL NEEDED BY t.	MATERIAL NEEDED BY u.	CONTRACTOR ACTION: CODE v.	DATE w.	SUBMIT TO GOVERN-MENT x.	GOVERNMENT ACTION: CODE y.	DATE z.	REMARKS aa.
			1.2	Carpet and Accessories	X										X											
			3.3	Installation		X									X											
			1.2	Carpet and Accessories			X								X											
			1.2	Moisture Tests						X					X											
			1.2	Carpet and Accessories							X				X											
			1.2	Carpet and Accessories								X				X										
			1.2	Carpet and Accessories										X	X											

SUBMITTAL REGISTER
(ER 415 1-10)

CONTRACT NO.

TITLE AND LOCATION
CLINIC ADDITION, HILL AFB, UT

CONTRACTOR

SPECIFICATION SECTION
09836

ACTIVITY NO. a.	TRANS-MITTAL NO. b.	ITEM NO c.	SPECIFICATION PARAGRAPH NUMBER d.	DESCRIPTION OF ITEM SUBMITTED e.	TYPE OF SUBMITTAL: DATA f.	DRAWINGS g.	INSTRUCTIONS h.	SCHEDULES i.	STATEMENTS j.	REPORTS k.	CERTIFICATES l.	SAMPLES m.	RECORDS n.	O&M MANUALS o.	CLASSIFICATION: INFORMATION ONLY p.	GOVERNMENT APPROVED q.	REVIEWER r.	CONTRACTOR SCHEDULE DATES: SUBMIT s.	APPROVAL NEEDED BY t.	MATERIAL NEEDED BY u.	CONTRACTOR ACTION: CODE v.	DATE w.	SUBMIT TO GOVERN-MENT x.	GOVERNMENT ACTION: CODE y.	DATE z.	REMARKS aa.
			1.3	Application instructions			X								X											
			1.7.2	Manufacturer's material safety data			X								X											
				sheets																						
			1.3	Applicator's qualifications					X						X											
			1.3	Evidence of acceptable variation					X						X											
			1.3	Coating							X				X											
			1.3	Multi-color coating								X			X											

SUBMITTAL REGISTER
(ER 415 1-10)

CONTRACT NO.

TITLE AND LOCATION
CLINIC ADDITION, HILL AFB, UT

CONTRACTOR

SPECIFICATION SECTION
09900

ACTIVITY NO. a.	TRANS-MITTAL NO. b.	ITEM NO. c.	SPECIFICATION PARAGRAPH NUMBER d.	DESCRIPTION OF ITEM SUBMITTED e.	TYPE OF SUBMITTAL: DATA f.	DRAWINGS g.	INSTRUCTIONS h.	SCHEDULES i.	STATEMENTS j.	REPORTS k.	CERTIFICATES l.	SAMPLES m.	RECORDS n.	O&M MANUALS o.	CLASSIFICATION: INFORMATION ONLY p.	GOVERNMENT APPROVED q.	REVIEWER r.	CONTRACTOR SCHEDULE DATES: SUBMIT s.	APPROVAL NEEDED BY t.	MATERIAL NEEDED BY u.	CONTRACTOR ACTION: CODE v.	DATE w.	SUBMIT TO GOVERN-MENT x.	GOVERNMENT ACTION: CODE y.	DATE z.	REMARKS aa.
			2.1	Paint	X										X											
			3.3	Mixing and Thinning			X								X											
			3.4	Application			X								X											
			2.1	Paint						X					X											
			2.1.3	Lead							X				X											
			2.1.2	Mildewcide and Insecticide							X				X											
			2.1.5	Volatile Organic Compound (VOC)							X				X											
				Content																						
			1.2	Moisture-curing Polyurethane								X			X											
			2.1	Paint								X			X											

SUBMITTAL REGISTER
(ER 415 1-10)

CONTRACT NO.

TITLE AND LOCATION
CLINIC ADDITION, HILL AFB, UT

CONTRACTOR

SPECIFICATION SECTION
09950

ACTIVITY NO. a.	TRANS-MITTAL NO. b.	ITEM NO c.	SPECIFICATION PARAGRAPH NUMBER d.	DESCRIPTION OF ITEM SUBMITTED e.	TYPE OF SUBMITTAL: DATA f.	DRAWINGS g.	INSTRUCTIONS h.	SCHEDULES i.	STATEMENTS j.	REPORTS k.	CERTIFICATES l.	SAMPLES m.	RECORDS n.	O&M MANUALS o.	CLASSIFICATION: INFORMATION ONLY p.	GOVERNMENT APPROVED q.	REVIEWER r.	CONTRACTOR SCHEDULE DATES: SUBMIT s.	APPROVAL NEEDED BY t.	MATERIAL NEEDED BY u.	CONTRACTOR ACTION: CODE v.	DATE w.	SUBMIT TO GOVERN-MENT x.	GOVERNMENT ACTION: CODE y.	DATE z.	REMARKS aa.
			1.2	Wall Covering and Accessories	X										X											
			3.2	Installation			X								X											
			1.2	Maintenance			X								X											
			1.2	Wall Covering and Accessories								X			X											

SUBMITTAL REGISTER
(ER 415 1-10)

CONTRACT NO.

TITLE AND LOCATION
CLINIC ADDITION, HILL AFB, UT

CONTRACTOR

SPECIFICATION SECTION
10100

ACTIVITY NO. a.	TRANS-MITTAL NO. b.	ITEM NO c.	SPECIFICATION PARAGRAPH NUMBER d.	DESCRIPTION OF ITEM SUBMITTED e.	TYPE OF SUBMITTAL: DATA f.	DRAWINGS g.	INSTRUCTIONS h.	SCHEDULES i.	STATEMENTS j.	REPORTS k.	CERTIFICATES l.	SAMPLES m.	RECORDS n.	O&M MANUALS o.	CLASSIFICATION: INFORMATION ONLY p.	GOVERNMENT APPROVED q.	REVIEWER r.	CONTRACTOR SCHEDULE DATES: SUBMIT s.	APPROVAL NEEDED BY t.	MATERIAL NEEDED BY u.	CONTRACTOR ACTION: CODE v.	DATE w.	SUBMIT TO GOVERN-MENT x.	GOVERNMENT ACTION: CODE y.	DATE z.	REMARKS aa.
			1.4	Fire Extinguisher Cabinets and Wall											X											
				Brackets																						
			1.4	Tack Boards											X											
			1.4	Fire Extinguisher Cabinets and Wall		X									X											
				Brackets																						
			1.4	Tack Boards		X									X											

SUBMITTAL REGISTER
(ER 415 1-10)

CONTRACT NO.

TITLE AND LOCATION
CLINIC ADDITION, HILL AFB, UT

CONTRACTOR

SPECIFICATION SECTION
10160

ACTIVITY NO. a.	TRANS-MITTAL NO. b.	ITEM NO. c.	SPECIFICATION PARAGRAPH NUMBER d.	DESCRIPTION OF ITEM SUBMITTED e.	TYPE OF SUBMITTAL: DATA f.	DRAWINGS g.	INSTRUCTIONS h.	SCHEDULES i.	STATEMENTS j.	REPORTS k.	CERTIFICATES l.	SAMPLES m.	RECORDS n.	O&M MANUALS o.	CLASSIFICATION: INFORMATION ONLY p.	GOVERNMENT APPROVED q.	REVIEWER r.	CONTRACTOR SCHEDULE DATES: SUBMIT s.	APPROVAL NEEDED BY t.	MATERIAL NEEDED BY u.	CONTRACTOR ACTION: CODE v.	DATE w.	SUBMIT TO GOVERN-MENT x.	GOVERNMENT ACTION: CODE y.	DATE z.	REMARKS aa.
			1.3	Toilet Partition System	X										X											
			1.3	Toilet Partition System		X									X											
			1.3	Toilet Partition System								X				X										

SUBMITTAL REGISTER
(ER 415 1-10)

CONTRACT NO.

TITLE AND LOCATION
CLINIC ADDITION, HILL AFB, UT

CONTRACTOR

SPECIFICATION SECTION
10260

ACTIVITY NO. a.	TRANS-MITTAL NO. b.	ITEM NO c.	SPECIFICATION PARAGRAPH NUMBER d.	DESCRIPTION OF ITEM SUBMITTED e.	TYPE OF SUBMITTAL: DATA f.	DRAWINGS g.	INSTRUCTIONS h.	SCHEDULES i.	STATEMENTS j.	REPORTS k.	CERTIFICATES l.	SAMPLES m.	RECORDS n.	O&M MANUALS o.	CLASSIFICATION: INFORMATION ONLY p.	GOVERNMENT APPROVED q.	REVIEWER r.	CONTRACTOR SCHEDULE DATES: SUBMIT s.	APPROVAL NEEDED BY t.	MATERIAL NEEDED BY u.	CONTRACTOR ACTION: CODE v.	DATE w.	SUBMIT TO GOVERN-MENT x.	GOVERNMENT ACTION: CODE y.	DATE z.	REMARKS aa.
			2.2	Corner Guards	X										X											
			2.3	Wall Guards	X										X											
			2.2	Corner Guards		X									X											
			2.3	Wall Guards		X									X											
			2.2	Corner Guards							X				X											
			2.3	Wall Guards							X				X											
			2.6	Finish								X			X											

SUBMITTAL REGISTER
(ER 415 1-10)

CONTRACT NO.

TITLE AND LOCATION
CLINIC ADDITION, HILL AFB, UT

CONTRACTOR

SPECIFICATION SECTION
10430

ACTIVITY NO. a.	TRANS-MITTAL NO. b.	ITEM NO. c.	SPECIFICATION PARAGRAPH NUMBER d.	DESCRIPTION OF ITEM SUBMITTED e.	TYPE OF SUBMITTAL: DATA f.	DRAWINGS g.	INSTRUCTIONS h.	SCHEDULES i.	STATEMENTS j.	REPORTS k.	CERTIFICATES l.	SAMPLES m.	RECORDS n.	O&M MANUALS o.	CLASSIFICATION: INFORMATION ONLY p.	GOVERNMENT APPROVED q.	REVIEWER r.	CONTRACTOR SCHEDULE DATES: SUBMIT s.	APPROVAL NEEDED BY t.	MATERIAL NEEDED BY u.	CONTRACTOR ACTION: CODE v.	DATE w.	SUBMIT TO GOVERN-MENT x.	GOVERNMENT ACTION: CODE y.	DATE z.	REMARKS aa.
			1.3	Exterior signs		X									X											
			1.3	Exterior Signs			X								X											
			1.3	Exterior Signs								X			X											

SUBMITTAL REGISTER
(ER 415 1-10)

CONTRACT NO.

TITLE AND LOCATION
CLINIC ADDITION, HILL AFB, UT

CONTRACTOR

SPECIFICATION SECTION
10440

ACTIVITY NO. a.	TRANS-MITTAL NO. b.	ITEM NO c.	SPECIFICATION PARAGRAPH NUMBER d.	DESCRIPTION OF ITEM SUBMITTED e.	TYPE OF SUBMITTAL: DATA f.	DRAWINGS g.	INSTRUCTIONS h.	SCHEDULES i.	STATEMENTS j.	REPORTS k.	CERTIFICATES l.	SAMPLES m.	RECORDS n.	O&M MANUALS o.	CLASSIFICATION: INFORMATION ONLY p.	GOVERNMENT APPROVED q.	REVIEWER r.	CONTRACTOR SCHEDULE DATES: SUBMIT s.	APPROVAL NEEDED BY t.	MATERIAL NEEDED BY u.	CONTRACTOR ACTION: CODE v.	DATE w.	SUBMIT TO GOVERN-MENT x.	GOVERNMENT ACTION: CODE y.	DATE z.	REMARKS aa.
			1.3	Interior Signage	X											X										
			1.3	Interior Signage		X									X											
			1.3	Interior Signage								X			X											

SUBMITTAL REGISTER
(ER 415 1-10)

CONTRACT NO.

TITLE AND LOCATION
CLINIC ADDITION, HILL AFB, UT

CONTRACTOR

SPECIFICATION SECTION
10505

ACTIVITY NO. a.	TRANS-MITTAL NO. b.	ITEM NO c.	SPECIFICATION PARAGRAPH NUMBER d.	DESCRIPTION OF ITEM SUBMITTED e.	TYPE OF SUBMITTAL: DATA f.	DRAWINGS g.	INSTRUCTIONS h.	SCHEDULES i.	STATEMENTS j.	REPORTS k.	CERTIFICATES l.	SAMPLES m.	RECORDS n.	O&M MANUALS o.	CLASSIFICATION: INFORMATION ONLY p.	GOVERNMENT APPROVED q.	REVIEWER r.	CONTRACTOR SCHEDULE DATES: SUBMIT s.	APPROVAL NEEDED BY t.	MATERIAL NEEDED BY u.	CONTRACTOR ACTION: CODE v.	DATE w.	SUBMIT TO GOVERN-MENT x.	GOVERNMENT ACTION: CODE y.	DATE z.	REMARKS aa.
			2.2	Material	X										X											
			2.2.3	Finish	X										X											
			2.3	components	X										X											
			3.1	Assembly	X										X											
			1.3	Color chips	X											X										
			2.1	Types		X										X										
			2.1	Location		X										X										
			3.1	Installation		X										X										

SUBMITTAL REGISTER
(ER 415 1-10)

CONTRACT NO.

TITLE AND LOCATION
CLINIC ADDITION, HILL AFB, UT

CONTRACTOR

SPECIFICATION SECTION
10800

ACTIVITY NO. a.	TRANS-MITTAL NO. b.	ITEM NO. c.	SPECIFICATION PARAGRAPH NUMBER d.	DESCRIPTION OF ITEM SUBMITTED e.	TYPE OF SUBMITTAL: DATA f.	DRAWINGS g.	INSTRUCTIONS h.	SCHEDULES i.	STATEMENTS j.	REPORTS k.	CERTIFICATES l.	SAMPLES m.	RECORDS n.	O&M MANUALS o.	CLASSIFICATION: INFORMATION ONLY p.	GOVERNMENT APPROVED q.	REVIEWER r.	CONTRACTOR SCHEDULE DATES: SUBMIT s.	APPROVAL NEEDED BY t.	MATERIAL NEEDED BY u.	CONTRACTOR ACTION: CODE v.	DATE w.	SUBMIT TO GOVERN-MENT x.	GOVERNMENT ACTION: CODE y.	DATE z.	REMARKS aa.
			2.1.2	Finishes	X										X											
			2.2	Accessory Items	X										X											
			2.1.2	Finishes								X			X											
			2.2	Accessory Items								X			X											

SUBMITTAL REGISTER
(ER 415 1-10)

CONTRACT NO.

TITLE AND LOCATION
CLINIC ADDITION, HILL AFB, UT

CONTRACTOR

SPECIFICATION SECTION
11700

ACTIVITY NO. a.	TRANS-MITTAL NO. b.	ITEM NO c.	SPECIFICATION PARAGRAPH NUMBER d.	DESCRIPTION OF ITEM SUBMITTED e.	TYPE OF SUBMITTAL: DATA f.	DRAWINGS g.	INSTRUCTIONS h.	SCHEDULES i.	STATEMENTS j.	REPORTS k.	CERTIFICATES l.	SAMPLES m.	RECORDS n.	O&M MANUALS o.	CLASSIFICATION: INFORMATION ONLY p.	GOVERNMENT APPROVED q.	REVIEWER r.	CONTRACTOR SCHEDULE DATES: SUBMIT s.	APPROVAL NEEDED BY t.	MATERIAL NEEDED BY u.	CONTRACTOR ACTION: CODE v.	DATE w.	SUBMIT TO GOVERN-MENT x.	GOVERNMENT ACTION: CODE y.	DATE z.	REMARKS aa.
			2.2	equipment	X											X										
			2.2	equipment		X										X										
			1.2	schedule				X								X										
			1.2	deviations					X							X										
			1.2	substitutions					X							X										
			2.2.4	Backflow preventers					X							X										
			1.4.5	Factory inspection												X										
			1.4.1	Materials and equipment							X					X										
			2.2	equipment										X		X										

SUBMITTAL REGISTER
(ER 415 1-10)

CONTRACT NO.

TITLE AND LOCATION
CLINIC ADDITION, HILL AFB, UT

CONTRACTOR

SPECIFICATION SECTION
11702

ACTIVITY NO. a.	TRANS-MITTAL NO. b.	ITEM NO c.	SPECIFICATION PARAGRAPH NUMBER d.	DESCRIPTION OF ITEM SUBMITTED e.	TYPE OF SUBMITTAL: DATA f.	DRAWINGS g.	INSTRUCTIONS h.	SCHEDULES i.	STATEMENTS j.	REPORTS k.	CERTIFICATES l.	SAMPLES m.	RECORDS n.	O&M MANUALS o.	CLASSIFICATION: INFORMATION ONLY p.	GOVERNMENT APPROVED q.	REVIEWER r.	CONTRACTOR SCHEDULE DATES: SUBMIT s.	APPROVAL NEEDED BY t.	MATERIAL NEEDED BY u.	CONTRACTOR ACTION: CODE v.	DATE w.	SUBMIT TO GOVERN-MENT x.	GOVERNMENT ACTION: CODE y.	DATE z.	REMARKS aa.
			1.3	Ceiling Mounted I.V. Support System	X											X										
			1.3	Cubical Track with curtain	X											X										
			1.3	Double Film Illuminator	X											X										
			1.3	4 Panel Film Illuminator	X											X										
			1.3	Magazine Rack	X											X										
			1.3	Patient Chart Holder	X											X										
			1.3	Storage Shelving	X											X										
			1.3	Ceiling Mounted I.V. Support System		X										X										
			1.3	Cubical Track with Curtain		X										X										
			1.3	Double Film Illuminator		X										X										
			1.3	4 Panel Film Illuminator		X										X										
			1.3	Magazine Rack		X										X										
			1.3	Patient Chart Holder		X										X										
			1.3	Storage Shelving		X										X										
			1.3	Ceiling Mounted I.V. Support System										X		X										
			1.3	Cubical Track with Curtain										X		X										
			1.3	Double Film Illuminator										X		X										
			1.3	4 Panel Film Illuminator										X		X										
			1.3	Magazine Rack										X		X										
			1.3	Patient Chart Holder										X		X										
			1.3	Storage Shelving										X		X										

SUBMITTAL REGISTER
(ER 415 1-10)

CONTRACT NO.

TITLE AND LOCATION
CLINIC ADDITION, HILL AFB, UT

CONTRACTOR

SPECIFICATION SECTION
12335

ACTIVITY NO. a.	TRANS-MITTAL NO. b.	ITEM NO c.	SPECIFICATION PARAGRAPH NUMBER d.	DESCRIPTION OF ITEM SUBMITTED e.	TYPE OF SUBMITTAL: DATA f.	DRAWINGS g.	INSTRUCTIONS h.	SCHEDULES i.	STATEMENTS j.	REPORTS k.	CERTIFICATES l.	SAMPLES m.	RECORDS n.	O&M MANUALS o.	CLASSIFICATION: INFORMATION ONLY p.	GOVERNMENT APPROVED q.	REVIEWER r.	CONTRACTOR SCHEDULE DATES: SUBMIT s.	APPROVAL NEEDED BY t.	MATERIAL NEEDED BY u.	CONTRACTOR ACTION: CODE v.	DATE w.	SUBMIT TO GOVERN-MENT x.	GOVERNMENT ACTION: CODE y.	DATE z.	REMARKS aa.
			1.2	Casework		X										X										
			1.2	Casework		X										X										
			1.2	Casework							X					X										
			1.2	Casework								X				X										

SUBMITTAL REGISTER
(ER 415 1-10)

CONTRACT NO.

TITLE AND LOCATION
CLINIC ADDITION, HILL AFB, UT

CONTRACTOR

SPECIFICATION SECTION
12540

ACTIVITY NO. a.	TRANS-MITTAL NO. b.	ITEM NO c.	SPECIFICATION PARAGRAPH NUMBER d.	DESCRIPTION OF ITEM SUBMITTED e.	TYPE OF SUBMITTAL: DATA f.	DRAWINGS g.	INSTRUCTIONS h.	SCHEDULES i.	STATEMENTS j.	REPORTS k.	CERTIFICATES l.	SAMPLES m.	RECORDS n.	O&M MANUALS o.	CLASSIFICATION: INFORMATION ONLY p.	GOVERNMENT APPROVED q.	REVIEWER r.	CONTRACTOR SCHEDULE DATES: SUBMIT s.	APPROVAL NEEDED BY t.	MATERIAL NEEDED BY u.	CONTRACTOR ACTION: CODE v.	DATE w.	SUBMIT TO GOVERN-MENT x.	GOVERNMENT ACTION: CODE y.	DATE z.	REMARKS aa.
			1.3	Window Coverings and Hardware	X										X											
			1.3	Window Coverings and Hardware		X									X											
			1.3	Window Coverings and Hardware								X			X											
			1.3	Window Coverings and Hardware										X	X											

SUBMITTAL REGISTER
(ER 415 1-10)

CONTRACT NO.

TITLE AND LOCATION
CLINIC ADDITION, HILL AFB, UT

CONTRACTOR

SPECIFICATION SECTION
12690

ACTIVITY NO. a.	TRANS-MITTAL NO. b.	ITEM NO. c.	SPECIFICATION PARAGRAPH NUMBER d.	DESCRIPTION OF ITEM SUBMITTED e.	TYPE OF SUBMITTAL: DATA f.	DRAWINGS g.	INSTRUCTIONS h.	SCHEDULES i.	STATEMENTS j.	REPORTS k.	CERTIFICATES l.	SAMPLES m.	RECORDS n.	O&M MANUALS o.	CLASSIFICATION: INFORMATION ONLY p.	GOVERNMENT APPROVED q.	REVIEWER r.	CONTRACTOR SCHEDULE DATES: SUBMIT s.	APPROVAL NEEDED BY t.	MATERIAL NEEDED BY u.	CONTRACTOR ACTION: CODE v.	DATE w.	SUBMIT TO GOVERN-MENT x.	GOVERNMENT ACTION: CODE y.	DATE z.	REMARKS aa.
			1.2	Entry Mats											X											
			1.2	Entry Mats and Frames		X									X											
			1.2	Entry Mats								X			X											

SUBMITTAL REGISTER
(ER 415 1-10)

CONTRACT NO.

TITLE AND LOCATION
CLINIC ADDITION, HILL AFB, UT

CONTRACTOR

SPECIFICATION SECTION
13080

ACTIVITY NO. a.	TRANS-MITTAL NO. b.	ITEM NO c.	SPECIFICATION PARAGRAPH NUMBER d.	DESCRIPTION OF ITEM SUBMITTED e.	TYPE OF SUBMITTAL: DATA f.	DRAWINGS g.	INSTRUCTIONS h.	SCHEDULES i.	STATEMENTS j.	REPORTS k.	CERTIFICATES l.	SAMPLES m.	RECORDS n.	O&M MANUALS o.	CLASSIFICATION: INFORMATION ONLY p.	GOVERNMENT APPROVED q.	REVIEWER r.	CONTRACTOR SCHEDULE DATES: SUBMIT s.	APPROVAL NEEDED BY t.	MATERIAL NEEDED BY u.	CONTRACTOR ACTION: CODE v.	DATE w.	SUBMIT TO GOVERN-MENT x.	GOVERNMENT ACTION: CODE y.	DATE z.	REMARKS aa.
			3.1	Bracing and Coupling	X											X										
			3.14	Lighting Fixtures in Buildings	X											X										
			3.13	Miscellaneous Equipment	X											X										
			3.1	Bracing and Coupling		X										X										
			3.3	Flexible Couplings or Joints		X										X										
			3.7	Resilient Vibration Isolation Devices		X										X										
			3.14	Lighting Fixtures in Buildings		X										X										
			3.13	Miscellaneous Equipment		X										X										

SUBMITTAL REGISTER
(ER 415 1-10)

CONTRACT NO.

TITLE AND LOCATION
CLINIC ADDITION, HILL AFB, UT

CONTRACTOR

SPECIFICATION SECTION
13814

ACTIVITY NO. a.	TRANS-MITTAL NO. b.	ITEM NO c.	SPECIFICATION PARAGRAPH NUMBER d.	DESCRIPTION OF ITEM SUBMITTED e.	TYPE OF SUBMITTAL: DATA f.	DRAWINGS g.	INSTRUCTIONS h.	SCHEDULES i.	STATEMENTS j.	REPORTS k.	CERTIFICATES l.	SAMPLES m.	RECORDS n.	O&M MANUALS o.	CLASSIFICATION: INFORMATION ONLY p.	GOVERNMENT APPROVED q.	REVIEWER r.	CONTRACTOR SCHEDULE DATES: SUBMIT s.	APPROVAL NEEDED BY t.	MATERIAL NEEDED BY u.	CONTRACTOR ACTION: CODE v.	DATE w.	SUBMIT TO GOVERN-MENT x.	GOVERNMENT ACTION: CODE y.	DATE z.	REMARKS aa.
			1.3	Equipment and Performance	X																					
			1.3	[_____]	X																					
			1.3	Equipment and Material		X																				
			1.3	[_____]		X																				
			1.3	Test Plan					X							X										
			1.3	Test Procedure					X																	
			1.3	[_____]					X																	
			3.4	Site Testing						X																
			1.3	[_____]						X																

SUBMITTAL REGISTER
(ER 415 1-10)

CONTRACT NO.

TITLE AND LOCATION
CLINIC ADDITION, HILL AFB, UT

CONTRACTOR

SPECIFICATION SECTION
15250

ACTIVITY NO. a.	TRANS-MITTAL NO. b.	ITEM NO. c.	SPECIFICATION PARAGRAPH NUMBER d.	DESCRIPTION OF ITEM SUBMITTED e.	TYPE OF SUBMITTAL: DATA f.	DRAWINGS g.	INSTRUCTIONS h.	SCHEDULES i.	STATEMENTS j.	REPORTS k.	CERTIFICATES l.	SAMPLES m.	RECORDS n.	O&M MANUALS o.	CLASSIFICATION: INFORMATION ONLY p.	GOVERNMENT APPROVED q.	REVIEWER r.	CONTRACTOR SCHEDULE DATES: SUBMIT s.	APPROVAL NEEDED BY t.	MATERIAL NEEDED BY u.	CONTRACTOR ACTION: CODE v.	DATE w.	SUBMIT TO GOVERN-MENT x.	GOVERNMENT ACTION: CODE y.	DATE z.	REMARKS aa.
			1.4	Thermal Insulation Materials	X											X										
			1.4	Thermal Insulation Materials								X			X											
			1.4	Thermal Insulation Materials									X			X										

SUBMITTAL REGISTER
(ER 415 1-10)

CONTRACT NO.

TITLE AND LOCATION
CLINIC ADDITION, HILL AFB, UT

CONTRACTOR

SPECIFICATION SECTION
15330

ACTIVITY NO. a.	TRANS-MITTAL NO. b.	ITEM NO c.	SPECIFICATION PARAGRAPH NUMBER d.	DESCRIPTION OF ITEM SUBMITTED e.	TYPE OF SUBMITTAL: DATA f.	DRAWINGS g.	INSTRUCTIONS h.	SCHEDULES i.	STATEMENTS j.	REPORTS k.	CERTIFICATES l.	SAMPLES m.	RECORDS n.	O&M MANUALS o.	CLASSIFICATION: INFORMATION ONLY p.	GOVERNMENT APPROVED q.	REVIEWER r.	CONTRACTOR SCHEDULE DATES: SUBMIT s.	APPROVAL NEEDED BY t.	MATERIAL NEEDED BY u.	CONTRACTOR ACTION: CODE v.	DATE w.	SUBMIT TO GOVERN-MENT x.	GOVERNMENT ACTION: CODE y.	DATE z.	REMARKS aa.
			1.3	Sprinkler System Equipment	X											X										
			1.4	Hydraulic Calculations	X											X										
			1.3	Spare Parts	X										X											
			1.3	Sprinkler System Shop Drawings		X										X										
			1.3	As-Built Drawings		X										X										
			1.3	Test Procedures			X									X										
			1.3	Preliminary Tests				X								X										
			1.3	Final Test				X								X										
			1.6	Installer Qualifications					X							X										
			1.5	Submittal Preparer's Qualifications					X							X										
			1.3	Contractor's Material & Test							X				X											
				Certificates																						
			1.3	Sprinkler System										X		X										

SUBMITTAL REGISTER
(ER 415 1-10)

CONTRACT NO.

TITLE AND LOCATION
CLINIC ADDITION, HILL AFB, UT

CONTRACTOR

SPECIFICATION SECTION
15405

ACTIVITY NO. a.	TRANS-MITTAL NO. b.	ITEM NO c.	SPECIFICATION PARAGRAPH NUMBER d.	DESCRIPTION OF ITEM SUBMITTED e.	TYPE OF SUBMITTAL: DATA f.	DRAWINGS g.	INSTRUCTIONS h.	SCHEDULES i.	STATEMENTS j.	REPORTS k.	CERTIFICATES l.	SAMPLES m.	RECORDS n.	O&M MANUALS o.	CLASSIFICATION: INFORMATION ONLY p.	GOVERNMENT APPROVED q.	REVIEWER r.	CONTRACTOR SCHEDULE DATES: SUBMIT s.	APPROVAL NEEDED BY t.	MATERIAL NEEDED BY u.	CONTRACTOR ACTION: CODE v.	DATE w.	SUBMIT TO GOVERN-MENT x.	GOVERNMENT ACTION: CODE y.	DATE z.	REMARKS aa.
			1.3	Welding	X										X											
			3.17	Vibration-Absorbing Features	X										X											
			1.3	Electrical Schematics		X									X											
			1.3	Plumbing System		X										X										
			3.25	Framed Instructions			X								X											
			1.3	Tests						X						X										
			1.3	Materials and Equipment							X				X											
			1.3	Bolts							X				X											
			1.3	Plumbing System										X	X											

SUBMITTAL REGISTER
(ER 415 1-10)

CONTRACT NO.

TITLE AND LOCATION
CLINIC ADDITION, HILL AFB, UT

CONTRACTOR

SPECIFICATION SECTION
15488

ACTIVITY NO. a.	TRANS-MITTAL NO. b.	ITEM NO c.	SPECIFICATION PARAGRAPH NUMBER d.	DESCRIPTION OF ITEM SUBMITTED e.	TYPE OF SUBMITTAL: DATA f.	DRAWINGS g.	INSTRUCTIONS h.	SCHEDULES i.	STATEMENTS j.	REPORTS k.	CERTIFICATES l.	SAMPLES m.	RECORDS n.	O&M MANUALS o.	CLASSIFICATION: INFORMATION ONLY p.	GOVERNMENT APPROVED q.	REVIEWER r.	CONTRACTOR SCHEDULE DATES: SUBMIT s.	APPROVAL NEEDED BY t.	MATERIAL NEEDED BY u.	CONTRACTOR ACTION: CODE v.	DATE w.	SUBMIT TO GOVERN-MENT x.	GOVERNMENT ACTION: CODE y.	DATE z.	REMARKS aa.
			1.3	Gas Piping System		X									X											

SUBMITTAL REGISTER
(ER 415 1-10)

CONTRACT NO.

TITLE AND LOCATION
CLINIC ADDITION, HILL AFB, UT

CONTRACTOR

SPECIFICATION SECTION
15569

ACTIVITY NO. a.	TRANS-MITTAL NO. b.	ITEM NO c.	SPECIFICATION PARAGRAPH NUMBER d.	DESCRIPTION OF ITEM SUBMITTED e.	TYPE OF SUBMITTAL: DATA f.	DRAWINGS g.	INSTRUCTIONS h.	SCHEDULES i.	STATEMENTS j.	REPORTS k.	CERTIFICATES l.	SAMPLES m.	RECORDS n.	O&M MANUALS o.	CLASSIFICATION: INFORMATION ONLY p.	GOVERNMENT APPROVED q.	REVIEWER r.	CONTRACTOR SCHEDULE DATES: SUBMIT s.	APPROVAL NEEDED BY t.	MATERIAL NEEDED BY u.	CONTRACTOR ACTION: CODE v.	DATE w.	SUBMIT TO GOVERN-MENT x.	GOVERNMENT ACTION: CODE y.	DATE z.	REMARKS aa.
			1.3	Manufacturer's Catalog Data	X											X										
			1.3	Spare Parts Data	X										X											
			1.3	Water Treatment Plan	X										X											
			1.3	Heating and Fuel Systems Test	X										X											
				Procedures																						
			1.3	Welding Procedures	X										X											
			1.3	Qualification	X										X											
			1.3	Welding Qualification	X										X											
			1.3	Heating System		X										X										
			1.3	Posted Instructions			X									X										
			1.3	Tests				X							X											
			1.3	Heating System and Fuel System						X					X											
				Tests																						
			1.3	Water Treatment Tests						X					X											
			1.3	Bolts							X				X											
			1.3	Boiler Emissions							X				X											
			1.3	Heating System										X	X											
			1.3	Water Treatment System										X	X											

SUBMITTAL REGISTER
(ER 415 1-10)

CONTRACT NO.

TITLE AND LOCATION
CLINIC ADDITION, HILL AFB, UT

CONTRACTOR

SPECIFICATION SECTION
15650

ACTIVITY NO. a.	TRANS-MITTAL NO. b.	ITEM NO c.	SPECIFICATION PARAGRAPH NUMBER d.	DESCRIPTION OF ITEM SUBMITTED e.	TYPE OF SUBMITTAL: DATA f.	DRAWINGS g.	INSTRUCTIONS h.	SCHEDULES i.	STATEMENTS j.	REPORTS k.	CERTIFICATES l.	SAMPLES m.	RECORDS n.	O&M MANUALS o.	CLASSIFICATION: INFORMATION ONLY p.	GOVERNMENT APPROVED q.	REVIEWER r.	CONTRACTOR SCHEDULE DATES: SUBMIT s.	APPROVAL NEEDED BY t.	MATERIAL NEEDED BY u.	CONTRACTOR ACTION: CODE v.	DATE w.	SUBMIT TO GOVERN-MENT x.	GOVERNMENT ACTION: CODE y.	DATE z.	REMARKS aa.
			1.3	Central Refrigerated Air-Conditioning	X											X										
				System																						
			1.3	Water Treatment Systems	X											X										
			1.3	Spare Parts	X										X											
			1.4	Qualifications	X										X											
			1.3	Central Refrigerated Air-Conditioning		X										X										
				System																						
			1.3	Posted Instructions			X								X		GA									
			3.2	Tests				X								X										
			3.6	Demonstrations				X								X										
			1.7.1	Verification of Dimensions					X						X											
			3.2.1	Field Tests						X						X										
			1.3	System Performance Tests						X						X										
			1.3	Inspections						X						X										
			1.3	Central Refrigerated Air-Conditioning							X				X											
				System																						
			1.3	Operation Manual										X	X											
			1.3	Maintenance Manual										X	X											
			1.3	Water Treatment System										X		X										

SUBMITTAL REGISTER
(ER 415 1-10)

CONTRACT NO.

TITLE AND LOCATION
CLINIC ADDITION, HILL AFB, UT

CONTRACTOR

SPECIFICATION SECTION
15895

ACTIVITY NO. a.	TRANS-MITTAL NO. b.	ITEM NO c.	SPECIFICATION PARAGRAPH NUMBER d.	DESCRIPTION OF ITEM SUBMITTED e.	TYPE OF SUBMITTAL: DATA f.	DRAWINGS g.	INSTRUCTIONS h.	SCHEDULES i.	STATEMENTS j.	REPORTS k.	CERTIFICATES l.	SAMPLES m.	RECORDS n.	O&M MANUALS o.	CLASSIFICATION: INFORMATION ONLY p.	GOVERNMENT APPROVED q.	REVIEWER r.	CONTRACTOR SCHEDULE DATES: SUBMIT s.	APPROVAL NEEDED BY t.	MATERIAL NEEDED BY u.	CONTRACTOR ACTION: CODE v.	DATE w.	SUBMIT TO GOVERN-MENT x.	GOVERNMENT ACTION: CODE y.	DATE z.	REMARKS aa.
			1.4	Components and Equipment Data	X											X										
			1.4	Air Supply, Distribution, Ventilation,		X										X										
				and Exhaust Equipment																						
			1.4	Test Procedures			X								X											
			1.4	Welding Procedures			X								X											
			1.4	System Diagrams			X									X										
			1.4	Test Schedules				X							X											
			1.4	Field Training Schedule				X							X											
			1.4	Similar Services					X						X											
			1.4	Welding Qualification					X						X											
			1.4	Test Reports						X					X											
			1.4	Bolts							X				X											
			1.4	Air Supply, Distribution, Ventilation,										X	X											
				and Exhaust Manuals																						

SUBMITTAL REGISTER
(ER 415 1-10)

CONTRACT NO.

TITLE AND LOCATION
CLINIC ADDITION, HILL AFB, UT

CONTRACTOR

SPECIFICATION SECTION
15950

ACTIVITY NO. a.	TRANS-MITTAL NO. b.	ITEM NO c.	SPECIFICATION PARAGRAPH NUMBER d.	DESCRIPTION OF ITEM SUBMITTED e.	TYPE OF SUBMITTAL: DATA f.	DRAWINGS g.	INSTRUCTIONS h.	SCHEDULES i.	STATEMENTS j.	REPORTS k.	CERTIFICATES l.	SAMPLES m.	RECORDS n.	O&M MANUALS o.	CLASSIFICATION: INFORMATION ONLY p.	GOVERNMENT APPROVED q.	REVIEWER r.	CONTRACTOR SCHEDULE DATES: SUBMIT s.	APPROVAL NEEDED BY t.	MATERIAL NEEDED BY u.	CONTRACTOR ACTION: CODE v.	DATE w.	SUBMIT TO GOVERN-MENT x.	GOVERNMENT ACTION: CODE y.	DATE z.	REMARKS aa.
			1.3	HVAC Control System	X											X										
			3.6	Training	X										X											
			1.3	Equipment	X										X											
			1.3	HVAC Control System		X										X										
			1.3	Service Organization			X								X											
			3.5	Testing, Commissioning, and						X					X											
				Balancing																						
			3.5	Testing, Commissioning, and									X		X											
				Balancing																						
			1.3	HVAC Control System										X	X											
			3.4	Commissioning Procedures										X	X											

SUBMITTAL REGISTER
(ER 415 1-10)

CONTRACT NO.

TITLE AND LOCATION
CLINIC ADDITION, HILL AFB, UT

CONTRACTOR

SPECIFICATION SECTION
15990

ACTIVITY NO. a.	TRANS-MITTAL NO. b.	ITEM NO. c.	SPECIFICATION PARAGRAPH NUMBER d.	DESCRIPTION OF ITEM SUBMITTED e.	TYPE OF SUBMITTAL: DATA f.	DRAWINGS g.	INSTRUCTIONS h.	SCHEDULES i.	STATEMENTS j.	REPORTS k.	CERTIFICATES l.	SAMPLES m.	RECORDS n.	O&M MANUALS o.	CLASSIFICATION: INFORMATION ONLY p.	GOVERNMENT APPROVED q.	REVIEWER r.	CONTRACTOR SCHEDULE DATES: SUBMIT s.	APPROVAL NEEDED BY t.	MATERIAL NEEDED BY u.	CONTRACTOR ACTION: CODE v.	DATE w.	SUBMIT TO GOVERN-MENT x.	GOVERNMENT ACTION: CODE y.	DATE z.	REMARKS aa.
			3.1	Testing and Balancing						X						X										
			1.4	Qualification							X				X											

SUBMITTAL REGISTER
(ER 415 1-10)

CONTRACT NO.

TITLE AND LOCATION
CLINIC ADDITION, HILL AFB, UT

CONTRACTOR

SPECIFICATION SECTION
15995

ACTIVITY NO. a.	TRANS-MITTAL NO. b.	ITEM NO c.	SPECIFICATION PARAGRAPH NUMBER d.	DESCRIPTION OF ITEM SUBMITTED e.	TYPE OF SUBMITTAL: DATA f.	DRAWINGS g.	INSTRUCTIONS h.	SCHEDULES i.	STATEMENTS j.	REPORTS k.	CERTIFICATES l.	SAMPLES m.	RECORDS n.	O&M MANUALS o.	CLASSIFICATION: INFORMATION ONLY p.	GOVERNMENT APPROVED q.	REVIEWER r.	CONTRACTOR SCHEDULE DATES: SUBMIT s.	APPROVAL NEEDED BY t.	MATERIAL NEEDED BY u.	CONTRACTOR ACTION: CODE v.	DATE w.	SUBMIT TO GOVERN-MENT x.	GOVERNMENT ACTION: CODE y.	DATE z.	REMARKS aa.
			1.1	Commissioning Team	X											X										
			1.1	Test Procedures			X									X										
			1.1	Test Schedule				X								X										
			1.1	Test Reports						X						X										

SUBMITTAL REGISTER
(ER 415 1-10)

CONTRACT NO.

TITLE AND LOCATION
CLINIC ADDITION, HILL AFB, UT

CONTRACTOR

SPECIFICATION SECTION
16375

ACTIVITY NO. a.	TRANS-MITTAL NO. b.	ITEM NO c.	SPECIFICATION PARAGRAPH NUMBER d.	DESCRIPTION OF ITEM SUBMITTED e.	TYPE OF SUBMITTAL: DATA f.	DRAWINGS g.	INSTRUCTIONS h.	SCHEDULES i.	STATEMENTS j.	REPORTS k.	CERTIFICATES l.	SAMPLES m.	RECORDS n.	O&M MANUALS o.	CLASSIFICATION: INFORMATION ONLY p.	GOVERNMENT APPROVED q.	REVIEWER r.	CONTRACTOR SCHEDULE DATES: SUBMIT s.	APPROVAL NEEDED BY t.	MATERIAL NEEDED BY u.	CONTRACTOR ACTION: CODE v.	DATE w.	SUBMIT TO GOVERN-MENT x.	GOVERNMENT ACTION: CODE y.	DATE z.	REMARKS aa.
			1.3	Manufacturer's Catalog Data	X										X											
			1.3	Material, Equipment, and Fixture	X										X											
				Lists																						
			1.3	Installation Procedures	X										X											
			1.3	Electrical Distribution System		X									X											
			1.3	As-Built Drawings		X									X											
			1.3	Factory Test						X					X											
			1.3	Field Testing						X					X											
			1.3	Test Reports						X					X											
			1.3	Cable Installation Reports						X					X											
			1.3	Materials and Equipment							X				X											
			1.3	Cable Splicer Qualification							X				X											
			1.3	Electrical Distribution System										X		X										

SUBMITTAL REGISTER
(ER 415 1-10)

CONTRACT NO.

TITLE AND LOCATION
CLINIC ADDITION, HILL AFB, UT

CONTRACTOR

SPECIFICATION SECTION
16415

ACTIVITY NO. a.	TRANS-MITTAL NO. b.	ITEM NO c.	SPECIFICATION PARAGRAPH NUMBER d.	DESCRIPTION OF ITEM SUBMITTED e.	TYPE OF SUBMITTAL: DATA f.	DRAWINGS g.	INSTRUCTIONS h.	SCHEDULES i.	STATEMENTS j.	REPORTS k.	CERTIFICATES l.	SAMPLES m.	RECORDS n.	O&M MANUALS o.	CLASSIFICATION: INFORMATION ONLY p.	GOVERNMENT APPROVED q.	REVIEWER r.	CONTRACTOR SCHEDULE DATES: SUBMIT s.	APPROVAL NEEDED BY t.	MATERIAL NEEDED BY u.	CONTRACTOR ACTION: CODE v.	DATE w.	SUBMIT TO GOVERN-MENT x.	GOVERNMENT ACTION: CODE y.	DATE z.	REMARKS aa.
			1.3	Electrical Work		X									X											
			1.3	Materials and Equipment						X					X											
			1.3	Telephone Installer							X				X											

SUBMITTAL REGISTER
(ER 415 1-10)

CONTRACT NO.

TITLE AND LOCATION
CLINIC ADDITION, HILL AFB, UT

CONTRACTOR

SPECIFICATION SECTION
16721

ACTIVITY NO. a.	TRANS-MITTAL NO. b.	ITEM NO c.	SPECIFICATION PARAGRAPH NUMBER d.	DESCRIPTION OF ITEM SUBMITTED e.	TYPE OF SUBMITTAL: DATA f.	DRAWINGS g.	INSTRUCTIONS h.	SCHEDULES i.	STATEMENTS j.	REPORTS k.	CERTIFICATES l.	SAMPLES m.	RECORDS n.	O&M MANUALS o.	CLASSIFICATION: INFORMATION ONLY p.	GOVERNMENT APPROVED q.	REVIEWER r.	CONTRACTOR SCHEDULE DATES: SUBMIT s.	APPROVAL NEEDED BY t.	MATERIAL NEEDED BY u.	CONTRACTOR ACTION: CODE v.	DATE w.	SUBMIT TO GOVERN-MENT x.	GOVERNMENT ACTION: CODE y.	DATE z.	REMARKS aa.
			1.4	Battery	X										X											
			1.4	Voltage Drop	X										X											
			1.4	Spare Parts	X										X											
			1.4	Qualifications	X										X											
			1.4	Fire Alarm Reporting System		X									X											
			1.4	Fire Alarm Reporting System			X								X											
			1.4	Training			X								X											
			1.4	Test Procedures					X						X											
			1.4	Testing						X					X											
			1.4	Equipment							X				X											
			1.4	Installer							X				X											
			1.4	Completion							X				X											

SUBMITTAL REGISTER
(ER 415 1-10)

CONTRACT NO.

TITLE AND LOCATION
CLINIC ADDITION, HILL AFB, UT

CONTRACTOR

SPECIFICATION SECTION
16741

ACTIVITY NO. a.	TRANS-MITTAL NO. b.	ITEM NO. c.	SPECIFICATION PARAGRAPH NUMBER d.	DESCRIPTION OF ITEM SUBMITTED e.	TYPE OF SUBMITTAL: DATA f.	DRAWINGS g.	INSTRUCTIONS h.	SCHEDULES i.	STATEMENTS j.	REPORTS k.	CERTIFICATES l.	SAMPLES m.	RECORDS n.	O&M MANUALS o.	CLASSIFICATION: INFORMATION ONLY p.	GOVERNMENT APPROVED q.	REVIEWER r.	CONTRACTOR SCHEDULE DATES: SUBMIT s.	APPROVAL NEEDED BY t.	MATERIAL NEEDED BY u.	CONTRACTOR ACTION: CODE v.	DATE w.	SUBMIT TO GOVERN-MENT x.	GOVERNMENT ACTION: CODE y.	DATE z.	REMARKS aa.
			1.5	Manufacturer's Catalog Data	X										X											
			1.5	Spare Parts Data	X										X											
			1.5	Detail Drawings		X									X											
			1.5	Coordination Drawings		X									X											
			1.5	As-Built Drawings		X									X											
			1.5	Installation Procedures			X								X											
			1.5	Material and Equipment Lists				X							X											
			1.5	Equipment Schedules				X							X											
			1.5	Qualifications					X						X											
			1.5	Quality Control Plan						X						X										
			1.5	Test Reports						X					X											
			1.5	Certificates of Compliance							X				X											
			1.5	Operations and Maintenance										X	X											
				Manuals																						

SUBMITTAL REGISTER
(ER 415 1-10)

CONTRACT NO.

TITLE AND LOCATION
CLINIC ADDITION, HILL AFB, UT

CONTRACTOR

SPECIFICATION SECTION
16742

ACTIVITY NO. a.	TRANS-MITTAL NO. b.	ITEM NO c.	SPECIFICATION PARAGRAPH NUMBER d.	DESCRIPTION OF ITEM SUBMITTED e.	TYPE OF SUBMITTAL: DATA f.	DRAWINGS g.	INSTRUCTIONS h.	SCHEDULES i.	STATEMENTS j.	REPORTS k.	CERTIFICATES l.	SAMPLES m.	RECORDS n.	O&M MANUALS o.	CLASSIFICATION: INFORMATION ONLY p.	GOVERNMENT APPROVED q.	REVIEWER r.	CONTRACTOR SCHEDULE DATES: SUBMIT s.	APPROVAL NEEDED BY t.	MATERIAL NEEDED BY u.	CONTRACTOR ACTION: CODE v.	DATE w.	SUBMIT TO GOVERN-MENT x.	GOVERNMENT ACTION: CODE y.	DATE z.	REMARKS aa.
			1.2	Spare Parts	X										X											
			1.2	Telephone System		X									X											
			1.2	Test Plans					X						X											
			1.2	Acceptance Tests						X					X											
			1.2	Installation Procedures						X					X											
			1.2	Material Certificates							X				X											

SUBMITTAL REGISTER
(ER 415 1-10)

CONTRACT NO.

TITLE AND LOCATION
CLINIC ADDITION, HILL AFB, UT

CONTRACTOR

SPECIFICATION SECTION
16750

ACTIVITY NO. a.	TRANS-MITTAL NO. b.	ITEM NO. c.	SPECIFICATION PARAGRAPH NUMBER d.	DESCRIPTION OF ITEM SUBMITTED e.	TYPE OF SUBMITTAL: DATA f.	DRAWINGS g.	INSTRUCTIONS h.	SCHEDULES i.	STATEMENTS j.	REPORTS k.	CERTIFICATES l.	SAMPLES m.	RECORDS n.	O&M MANUALS o.	CLASSIFICATION: INFORMATION ONLY p.	GOVERNMENT APPROVED q.	REVIEWER r.	CONTRACTOR SCHEDULE DATES: SUBMIT s.	APPROVAL NEEDED BY t.	MATERIAL NEEDED BY u.	CONTRACTOR ACTION: CODE v.	DATE w.	SUBMIT TO GOVERN-MENT x.	GOVERNMENT ACTION: CODE y.	DATE z.	REMARKS aa.
			1.6	Design Analysis and Calculations	X										X											
			1.6	Manufacturer's Catalog Data	X										X											
			1.6	Spare Parts Data	X										X											
			1.6	TONE/VISUAL NURSE CALL		X										X										
				SYSTEMS																						
			1.6	As-Built Drawings		X									X											
			1.6	Material and Equipment Lists				X							X											
			1.6	Qualifications					X						X											
			1.6	Quality Assurance Plan						X					X											
			1.6	Test Reports						X					X											
			1.6	Training Data							X				X											
			1.6	Installation Procedures							X				X											
			1.6	Certificates of Compliance							X				X											
			1.6	Tone/Visual Nurse Call Systems										X	X											

SUBMITTAL REGISTER
(ER 415 1-10)

CONTRACT NO.

TITLE AND LOCATION
CLINIC ADDITION, HILL AFB, UT

CONTRACTOR

SPECIFICATION SECTION
16770

ACTIVITY NO. a.	TRANS-MITTAL NO. b.	ITEM NO c.	SPECIFICATION PARAGRAPH NUMBER d.	DESCRIPTION OF ITEM SUBMITTED e.	TYPE OF SUBMITTAL: DATA f.	DRAWINGS g.	INSTRUCTIONS h.	SCHEDULES i.	STATEMENTS j.	REPORTS k.	CERTIFICATES l.	SAMPLES m.	RECORDS n.	O&M MANUALS o.	CLASSIFICATION: INFORMATION ONLY p.	GOVERNMENT APPROVED q.	REVIEWER r.	CONTRACTOR SCHEDULE DATES: SUBMIT s.	APPROVAL NEEDED BY t.	MATERIAL NEEDED BY u.	CONTRACTOR ACTION: CODE v.	DATE w.	SUBMIT TO GOVERN-MENT x.	GOVERNMENT ACTION: CODE y.	DATE z.	REMARKS aa.
			1.3	Spare Parts Data	X										X											
			1.3	Detail Drawings		X									X											
			1.3	As-Built Drawings		X									X											
			1.3	Quality Assurance Plan						X					X											
			1.3	Quality Assurance						X					X											
			1.3	Test Reports						X					X											
			1.3	Public Address and Program										X	X											
				Distribution Systems																						

INDEX

SECTION 01311

NETWORK ANALYSIS SYSTEM

PARAGRAPH			PAGE
PART 1	GENERAL		1
1.1	ER 1-1-11	CONTRACTOR PREPARED NETWORK ANALYSIS SYSTEM (NAS)	1
1.2	ER 1-1-11	SCHEDULING SYSTEM DATA EXCHANGE FORMAT	4
PART 2	PRODUCTS (NOT APPLICABLE)		12
PART 3	EXECUTION (NOT APPLICABLE)		12

SECTION 01311

NETWORK ANALYSIS SYSTEM

PART 1 GENERAL

1.1 ER 1-1-11 CONTRACTOR PREPARED NETWORK ANALYSIS SYSTEM (NAS):

(A) The progress chart to be prepared by the Contractor pursuant to the General Clause entitled "SCHEDULE FOR CONSTRUCTION CONTRACTS" shall consist of a network analysis system (NAS) as described below. The scheduling of construction is the responsibility of the Contractor and Contractor management personnel shall actively participate in development of the network logic diagram so that intended sequences and procedures are clearly understood. The Contractor shall provide the NAS in either Arrow Diagram Method (ADM) or Precedence (PDM) format. The network diagram required at the initial schedule submission shall depict the order and interdependence of activities and the method by which the work is to be accomplished. Conditions of submittal are:

(1) The diagram shall show a continuous activity flow from left to right. The activity or event numbers, description, duration, and value shall be shown on the diagram.

(2) Dates shall be shown on the diagram for start of the project, any milestones required by the contract, and contract completion.

(3) The critical path shall be clearly identified.

(4) Submittal, review, procurement, fabrication, delivery, installation, start-up, and testing of special or long lead-time materials and equipment shall be included in the NAS diagram.

(5) Government and other agency activities shall be shown. These include but are not limited to: notice to proceed, approvals, inspections, and utility tie in for phasing requirements.

(B) A preliminary network diagram, defining the Contractor’s planned operations for the 90 days shall be provided within 30 calendar days after notice to proceed is acknowledged. The approved preliminary schedule shall be used for payment not to exceed 60 days after notice to proceed.

(C) The initial NAS shall be submitted within 60 calendar days after notice to proceed. It shall provide (1) a reasonable sequence of activities which represent work through the entire project and (2) a reasonable level of activity detail. The schedule interval shall extend from notice to proceed through the contract completion date. Completion of the last activity in the schedule shall be constrained by the contract completion date such that if the projected finish of the last activity falls after the contract completion, then the float calculation shall reflect negative float. Interim milestone dates specified shall be so constrained also. Progress payments will be withheld until the Contractor submits an approvable schedule.

(D) The Contractor shall submit a reproducible and two copies of the network diagram at the initial submittal and three copies of the specified reports at the initial and every monthly update throughout the life of the project. The format of the reports shall contain: Activity Number(s), Activity description, Original Duration, Remaining Duration, Early Start date, Late Start date, Early Finish date, Late Finish date, and Total Float. Precedence schedule reports shall include and display preceding and succeeding activities. Cost and/or Earned Value reports shall contain Estimated Earned

Value, Percent Complete (based on cost), and Earnings to Date. Report formats are as follow:

(1) Logic Report: This report shall list all activities sorted according to activity number. Activities shall be printed in ascending order of activity number. Any standard report which lists all activities including restraints in this manner is acceptable.

(2) Criticality Report: This report shall list all activities sorted in ascending order of total float. Activities which have equal values of total float shall be listed in ascending order of Early Starts.

(3) Cost or Earned Value Report: This report shall compile Contractors total earned value on the project from the notice to proceed until the most recent monthly progress meeting based on agreed progress between the Contractor and the Contracting Officer. Provided that the Contractor has submitted a complete schedule update, this report shall serve as the basis for determining Contractor payment. Activities shall be grouped by bid item and then sorted by activity number(s). This report shall subtotal all activities in a bid item and provide a bid item percent complete and then total all bid items to provide a total project percent complete.

(4) Other sorted reports or curves may be required as project requirements dictate, however, the total number should be limited.

(E) A monthly meeting shall be conducted on site attended by the Contractor's project manager and appropriate Contracting Officer's representatives. During this meeting the Contractor will describe, on an activity by activity basis, all proposed revisions and adjustments to the NAS required to reflect the current status of the project. The Contracting Officer's representative shall approve activity progress, proposed revisions and adjustments, and the use of any optional calculations. The following shall be addressed:

(1) The actual start and actual finish dates for all activities in progress or completed as appropriate.

(2) The estimated remaining duration for each activity in progress. Progress calculations must be based on remaining duration for each activity and be in an approved calculation mode.

(3) The earned value for each activity started but not completed. Payment shall be based on cost of completed activities plus cost to date of in progress activities.

(4) All logic changes pertaining to change orders on which a Notice to Proceed has been issued, Contractor proposed changes in activity sequence or durations, and corrections to schedule logic to avoid out of sequence progress.

(F) Following the monthly progress meeting, a complete update of the NAS based on the approved progress, revisions, and adjustments agreed upon at the meeting shall be computed and submitted not later than 5 working days after the meeting. This update shall be subject to approval of the accurate entry of information agreed upon at the meeting. Actual starts and finishes, remaining duration, or percent complete shall not be automatically updated by default dates contained in many CPM scheduling software systems, except that early start for an activity which could start prior to the update but has no actual start shall default to the data date of the update. Activities which have posted progress without predecessor activities being completed shall be allowed only on a case by case approval of the Contracting Officer's

representative who may require logic changes to correct all such out of sequence progress.

(G) A narrative report shall be provided with each update of the NAS. This report shall include (1) a description of activities and progress along the four most critical paths, (2) a description of current and anticipated problem areas or delaying factors and their impact, and (3) an explanation of the corrective actions taken. Only modifications that have been authorized and approved by the Contracting Officer shall be included in the schedule submission. The narrative report shall specifically reference, on an activity by activity basis, all changes made since the previous period and relate each change to documented, approved schedule changes. This report, along with the progress update above shall provide the basis for the Contractor's progress payment request and the Contractor shall be entitled to progress payments determined from the currently approved NAS update. If the Contractor fails or refuses to furnish the information and NAS data which, in the sole judgement of the Contracting Officer, is necessary for verifying the Contractor's progress, the Contractor shall be deemed not to have provided a progress payment estimate and progress payment will not be made.

(H) The Contractor shall prepare proposed NAS revisions for all contract changes and submit them to the Contracting Officer's representative. These shall include a narrative listing the affected activities, a statement of the expected overall impact of the change proposed, and a sub-network of the affected diagram area. When agreed upon by the Contracting Officer's representative, the change logic and durations shall be utilized in analysis of the overall project and the appropriate impact of the change determined for inclusion of time impact for a modification. When notice to proceed with changes must be issued prior to settlement of price and/or time, the Contractor shall submit the same revisions for concurrence by the Contracting Officer's representative prior to inclusion in the NAS. If the Contractor fails to submit or include such revisions within 30 days of the notice to proceed, the Contracting Officer's representative will furnish to the Contractor suggested logic and/or revised durations to be entered in the NAS until the Contractor submits revisions, and final changes and impact have been negotiated. If the Contractor has any objections to the data furnished by the Contracting Officer, he shall advise the Contracting Officer promptly of his objections and written counterplan, however he will continue to use the revisions by the Contracting Officer until such time as alternate data is approved. If the Contractor fails to submit his alternative plan within 20 days after the date such suggested revisions were furnished by the Contracting Officer, the Contractor will be deemed to have concurred with the Contracting Officer's suggested logic/duration time changes. The changes then will be the basis for equitable adjustment for performance of the work.

(I) In the event the Contractor requests an extension of the contract completion date for any other contractual reason, he shall furnish such justification as the Contracting Officer may deem necessary for a determination of the Contractor's right to an extension of time under the provisions of the contract. In such event the schedule revisions must clearly display that the Contractor has used in full all available float time for the work involved with the request. Actual delays that are found to be caused by the Contractor's own actions or lack of action, and which result in the extension of the projected contract completion date shall not be a cause for extension of the contract completion date. The Contracting Officer may find cause to extend the contract completion date under the contract in the absence of a request by the Contractor when, in the Contracting Officer's judgement, it is equitable.

(J) Float available in the schedule at any time shall not be considered as for exclusive use by either the Contractor or the Government. Extensions of time for performance of work required under Contract Clauses

entitled, "CHANGES", "DIFFERING SITE CONDITIONS", "DEFAULT (FIXED PRICE CONSTRUCTION)", or "SUSPENSION OF WORK" will be granted only to the extent that equitable time adjustments for affected activities exceed the total float along their paths.

(K) To monitor a Contractor's schedule by use of an in-house program, the transfer of data shall be accomplished by requiring a Standard Data Exchange Format. A data disk shall be provided as required by paragraph below, SCHEDULING SYSTEM DATA EXCHANGE FORMAT. The automated scheduling system utilized by the Contractor shall be capable of providing all requirements of this specification. As many data disk(s) as required in the "Standard Data Exchange Format" shall be provided with the Initial Schedule, Monthly Updates, and all NAS revisions or requests for revision. Refer to Paragraph below: SCHEDULING SYSTEM DATA EXCHANGE FORMAT, for a complete description of this format.

1.2 ER 1-1-11 SCHEDULING SYSTEM DATA EXCHANGE FORMAT:

(A) GENERAL

(1) Application of this Provision: The data exchange format provides a platform for exchanging scheduling and planning data between various software systems. This section shall be used in conjunction with paragraph above entitled, "CONTRACTOR PREPARED NETWORK ANALYSIS SYSTEM." The Data Exchange Format shall allow project management systems to share information with other programs. Scheduling information shall be transferred from the Contractor's project management system to the Government as described in this section.

(2) Electronic Data Exchange File Required for All Schedule Submissions:

(a) The Contractor shall provide schedule data in the Data Exchange Format for each Preliminary, Initial, Monthly NAS Updates, and requests for time extensions or change proposals. The Contractor's failure to provide schedule data in the exact format described herein shall result in disapproval of the entire schedule submission.

(b) The entire set of schedule data shall be transferred at every exchange of scheduling data. Thus, for updates to existing projects, the data exchange file shall contain all activities that have not started or are already complete as well as those activities in progress.

(3) Data Transfer Responsibility: The Contractor shall be responsible for Electronic Data Exchange File data that may have been lost or destroyed during transit between the Contractor and the Contracting Officer. If Electronic Data Exchange File data is damaged during transit, then the Contractor shall provide the Contracting Officer with a new Electronic Data Exchange File within two (2) working days of notification by the Contracting Officer.

(4) Data Consistency Responsibility: The Contractor shall be responsible for the consistency between the Electronic Data Exchange File and printed reports which accompany schedule submissions. If Electronic Data Exchange File data for a schedule submission differs, in any way, from the printed schedule reports or standard activity coding, then the Contracting Officer shall disapprove the entire schedule submission. The Contractor shall provide the Contracting Officer with a completely revised, and consistent, schedule submission within 24 hours of notification of inconsistency by the Contracting Officer.

(5) Creating the Electronic Data Exchange File: This equipment shall be Year 2000 compliant and shall be able to accurately process date/time data (including, but not limited to, calculating, comparing, and sequencing) from, into, and between the twentieth and twenty-first centuries, including leap year calculations, when used in accordance with the product documentation provided by the Contractor, provided that all products (e.g. hardware, software, firmware) used in combination with other information technology shall accurately process date/time data if the other information technology properly exchanges date/time data with it. The Contractor shall have the option of creating the electronic data exchange file by one of the three following methods:

(a) Commercially Available Software: The Contractor shall be required to secure software that meets this requirement. Many commercially available scheduling systems support the standard data exchange format.

(b) Interface Program: Under this option the Contractor shall produce his own data translation software. This software shall take the information provided by the Contractor’s scheduling system and reformat the data into the Data Exchange Format.

(c) Manual Methods: Under this option the Contractor shall manually reformat his scheduling system report files or create all necessary data by manually entering all data into the Data Exchange Format.

(B) GENERAL DATA EXCHANGE FILE REQUIREMENTS:

(1) File Transfer Medium: All required data shall be submitted on 5-1/4" diskette(s), formatted to hold 360 KB of data, under the MS-DOS version 2.0 (or higher) operating system. Higher data densities and other operating systems may be approved by the Contracting Officer if compatible with the Government’s computing capability.

(2) File Type and Format: The data file shall consist of a 132 character, fixed format, "ASCII" file. Text shall be left-justified and numbers shall be right-justified in each field. Data records must conform, exactly, to the sequence, column position, maximum length, mandatory values, and field definitions described below to comply with this standard data exchange format. Unless specifically stated, all numbers shall be whole numbers. All data columns shall be separated by a single blank column.

(3) Electronic Data Exchange File Name: The Contractor shall insure that each file has a name related to either the schedule data date, project name, or contract number. No two Electronic Data Exchange Files shall have the same name through the life of this contract. The Contractor shall submit his file naming convention to the Contracting Officer for approval. In the event that the Contractor’s naming convention is disapproved, the Contracting Officer shall direct the Contractor to provide files under a unique file naming convention.

(4) Disc Label: The Contractor shall affix a permanent exterior label to each diskette submitted. The label shall contain the type of schedule (Preliminary, Initial, Update, or Change), full project number, project name, project location, data date, name and telephone number of the Contractor’s scheduler, and the MS-DOS version used to format the diskette.

(5) Standard Activity Coding Dictionary: The Contractor shall submit, with the initial schedule submission, a consistent coding scheme that shall be used throughout the project for the Activity Codes shown in Paragraph 12.e of this section. The coding scheme submitted shall demonstrate that each code shall only represent one type of information through the duration of the

contract. Incomplete coding of activities or an incomplete coding scheme shall be sufficient for disapproval of the schedule.

(C) DATA FORMAT

(1) Data Exchange File Format Organization: The Data Exchange File Format shall consist of the following records provided in the exact sequence shown below:

Paragraph Reference	Record Description	Remarks
(2)(a)	Volume Record	First Record on Every Data Disk
(2)(b)	Project ID Record	Second Record
(2)(c)	Calendar Record(s)	Minimum of One Record Required
(2)(d)	Holiday Record(s)	Optional Record
(2)(e)	Activity Record(s)	Mandatory Record
(2)(f)	Precedence Records	Mandatory for Precedence Method
(2)(g)	Unit Cost Record(s)	Optional for Unit Cost Projections
(2)(h)	Progress Record(s)	Mandatory for Updates
(2)(I)	File End Record	Last Record of Data File

(2) Record Descriptions:

(a) Volume Record: The Volume Record shall be used to control the transfer of data that may not fit on a single disk. The first record in every disk used to store the data exchange file shall contain the Volume Record. The Volume Record shall sequentially identify the number of the data transfer disk(s). The Volume Record shall have the following format:

Description	Column Position	Max. Len.	Reqd. Value	Type	Just.
RECORD IDENTIFIER	1- 4	4	VOLM	Fixed	
DISK NUMBER	6- 7	2		Number	Right

1. The RECORD IDENTIFIER is the first four characters of this record. The required value for this field shall be "VOLM".

2. The DISK NUMBER field shall identify the number of the data disk used to store the data exchange information. If all data may be contained on a single disk, this field shall contain the value of "1". If more disks are required, then the second disk shall contain the value "2", the third disk shall be designated with a "3", and so on. Identification of the last data Identification of the last data disk is accomplished in the PROJECT END RECORD (see paragraph 17.1).

(b) Project ID Record: The Project ID Record is the second record of the file and shall contain project information in the following format:

Description	Column Position	Max. Len.	Reqd. Value	Type	Just.
RECORD IDENTIFIER	1- 4	4	PROJ.	Fixed	
DATA DATE	6- 12	7	-	ddmmmyy	See (2)
PROJECT IDENTIFIER	14- 17	4	-	Alpha.	Left
PROJECT NAME	19- 66	48	-	Alpha.	Left
CONTRACTOR NAME	68- 103	36	-	Alpha.	Left
ARROW OR PRECEDENCE	105	1	A,P	Fixed	
CONTRACT NUMBER	107-112	6	-	Alpha.	Left

PROJECT START	114-120	7	-	ddmmyy	Filled
PROJECT END	122-128	7	-	ddmmyy	Filled

1 The RECORD IDENTIFIER is the first four characters of this record. The required value for this field shall be "PROJ". This record shall contain the general project information and indicates which scheduling method shall be used.

2 The DATA DATE is the date of the schedule calculation. The abbreviation "ddmmyy" refers to a date format that shall translate a date into two numbers for the day, three letters for the month, and two numbers for the year. For example, March 1, 1999 shall be translated into 01Mar99. This same convention for date formats shall be used throughout the entire data format. To insure that dates are translated consistently, the following abbreviations shall be used for the three character month code:

Abbreviation	Month
JAN	January
FEB	February
MAR	March
APR	April
MAY	May
JUN	June
JUL	July
AUG	August
SEP	September
OCT	October
NOV	November
DEC	December

3 The PROJECT IDENTIFIER is a maximum of four character abbreviation for the schedule. These four characters shall be used to uniquely identify the project and specific update as agreed upon by the Contractor and Contracting Officer. When utilizing scheduling software these four characters shall be used to select the project. Software manufacturers' shall verify that data importing programs do not automatically overwrite other schedules with the same PROJECT IDENTIFIER.

4 The PROJECT NAME field shall contain the name and location of the project edited to fit the space provided. The data appearing here shall appear on scheduling software reports. The abbreviation "Alpha", used throughout paragraph six, RECORD DESCRIPTIONS, refers to an "Alphanumeric" field value.

5 The CONTRACTOR NAME field shall contain the Construction Contractor's name edited to fit the space provided.

6 The ARROW OR PRECEDENCE field shall indicate which method shall be used for calculation of the schedule. The value "A" shall signify the Arrow Diagraming Technique. The value "P" shall signify the Precedence Diagraming Technique. The ACTIVITY IDENTIFICATION field of the Activity Record shall be interpreted differently depending on the value of this field (see paragraph 12.e.2). The Precedence Record shall be required if the value of this field is "P" (see paragraph 12.f).

7 The CONTRACT NUMBER field shall directly identify the contract for the project. For example, a complete government construction contract number, "DACA05-89-C-0001", shall be entered into this field as "890001".

8 The PROJECT START shall contain the date that the project will start or has started. On government construction projects, this date is the date that the construction Contractor acknowledges the Notice to Proceed.

9 The PROJECT END shall contain the data that the contract must complete on or prior to. On government construction projects, this date is the PROJECT START plus the contract period, typically expressed in a specific number of calendar days.

(c) Calendar Record: The Calendar Record(s) shall follow the Project Identifier Record in every data file. A minimum of one Calendar Record shall be required for all data exchange activity files. The format for the Calendar Record shall be as follows:

Description	Column Position	Max. Len.	Reqd. Value	Type	Just.
RECORD IDENTIFIER	1- 4	4	CLDR	Fixed	
CALENDAR CODE	6- 6	1	-	Alpha.	Filled
WORKDAYS	8- 14	7	SMTWTFS	See (3)	
CALENDAR DESCRIPTION	16- 45	30	-	Alpha.	Left

1 The RECORD IDENTIFIER shall always begin with "CLDR" to identify it as a Calendar Record. Each Calendar Record used shall have this identification in the first four columns.

2 The CALENDAR CODE shall be used in the activity records to signify that this calendar is associated with the activity.

3 The WORKDAYS field shall contain the work-week pattern selected with "Y", for Yes, and "N", for No. The first character shall be Sunday and the last character shall be Saturday. An example of a typical five (5) day work-week would be NYYYYYN. A seven (7) day work-week would be YYYYYYY.

4 The CALENDAR DESCRIPTION shall be used to briefly explain the calendar used.

(d) Holiday Record:

Optional Holiday Record(s) shall follow the Calendar Record(s). The Holiday Record shall be used to designate specific non-work days for a specific Calendar. More than one Holiday Record may be used for a particular calendar. If used, the following format shall be followed:

Description	Column Position	Max. Len.	Reqd. Value	Type	Just.
RECORD IDENTIFIER	1- 4	4	HOLI.	Fixed	
CALENDAR CODE	6- 6	1	-	Alpha.	Filled
HOLIDAY DATE	8- 14	7	-	ddmmyy	Filled
HOLIDAY DATE	16- 22	7	-	ddmmyy	Filled
HOLIDAY DATE	24- 30	7	-	ddmmyy	Filled
HOLIDAY DATE	32- 38	7	-	ddmmyy	Filled
HOLIDAY DATE	40- 46	7	-	ddmmyy	Filled
HOLIDAY DATE	48- 54	7	-	ddmmyy	Filled
HOLIDAY DATE	56- 62	7	-	ddmmyy	Filled
HOLIDAY DATE	64- 70	7	-	ddmmyy	Filled
HOLIDAY DATE	72- 78	7	-	ddmmyy	Filled
HOLIDAY DATE	80- 86	7	-	ddmmyy	Filled
HOLIDAY DATE	88- 94	7	-	ddmmyy	Filled
HOLIDAY DATE	96- 112	7	-	ddmmyy	Filled
HOLIDAY DATE	114-120	7	-	ddmmyy	Filled
HOLIDAY DATE	122-128	7	-	ddmmyy	Filled

1 The RECORD IDENTIFIER shall always begin with "HOLI" and shall signify an Optional Holiday Calendar is to be used.

2 The CALENDAR CODE indicates which work-week calendar the holidays shall be applied to. More than one HOLI record may be used for a given CALENDAR CODE.

3 The HOLIDAY DATE is to be used for each date to be designated as a non-work day.

(e) Activity Records: Activity Records shall follow any Holiday Record(s). If there are no Holiday Record(s), then the Activity Records shall follow the Calendar Record(s). There shall be one Activity Record for every activity in the network. Each activity shall have one record in the following format:

Description	Column Position	Max. Len.	Reqd. Value	Type	Just.
RECORD IDENTIFIER	1- 4	4	ACTV	Fixed	
ACTIVITY IDENTIFICATION	6- 15	10	-	See (2)	
ACTIVITY DESCRIPTION	17- 46	30	-	Alpha.	Left
ACTIVITY DURATION	48- 50	3	-	Integer	Right
ACTIVITY COST	52- 60	9	-	Integer	Right
CONSTRAINT DATE	62- 68	7	-	ddmmyy	Filled
CONSTRAINT TYPE	70- 71	2	-	See (7)	
CALENDAR CODE	73- 73	1	-	Alpha.	Filled
HAMMOCK CODE	75- 75	1	Y,blank	Fixed	
WORKERS PER DAY	77- 79	3	-	Integer	Right
RESPONSIBILITY CODE	81- 84	4	-	Alpha.	Left
WORK AREA CODE	86- 89	4	-	Alpha.	Left
MOD OR CLAIM NUMBER	91- 94	4	-	Alpha.	Left
BID ITEM	96- 99	4	-	Alpha.	Left
UCI CODE	101-105	5	-	See (15)	
USER DEFINED 1	107-110	4	-	See (16)	
USER DEFINED 2	112-115	4	-	See (16)	
USER DEFINED 3	117-120	4	-	See (16)	
USER DEFINED 4	122-125	4	-	See (16)	
USER DEFINED 5	127-130	4	-	See (16)	

1 The RECORD IDENTIFIER for each activity description record must begin with the four character "ACTV" code. This field shall be used for both the Arrow Diagram Method (ADM) and Precedence Diagram Method (PDM) (See paragraph 12.b.6).

2 The ACTIVITY IDENTIFICATION consists of coding that differs, depending on whether the ADM or PDM method was selected in the Project Record (see paragraph 6.b.6). If the ADM method was selected, then the field shall be interpreted as two right-justified fields of five (5) integers each. If the PDM method was selected, the field shall be interpreted as one (1) right-justified field of ten (10) integers each. The maximum activity number allowed under this arrangement is 99999 for ADM and 9999999999 for the PDM method.

3 The ACTIVITY DESCRIPTION shall be a maximum of 30 characters. Descriptions must be limited to the space provided.

4 The ACTIVITY DURATION contains the estimated duration for the activity on the schedule. The duration shall be based upon the work-week designated by the activity’s related calendar (referenced in 12.e.8).

5 The ACTIVITY COST contains the estimated earned value of the work to be accomplished in the activity.

6 The CONSTRAINT DATE field shall be used to identify a date that the scheduling system may use to modify float calculations. If there is a date in this field, then there must be a valid entry in the CONSTRAINT TYPE field. The CONSTRAINT DATE shall be the same as, or later then, the PROJECT START DATE. The CONSTRAINT DATE shall be the same as, or earlier than, the PROJECT END DATE.

7 The CONSTRAINT TYPE field shall be used to identify the way that the scheduling system shall use the CONSTRAINT DATE to modify schedule float calculations. If there is a value in this field, then there must be a valid entry in the CONSTRAINT DATE field. Below are the minimum list of entries for the CONSTRAINT TYPE. Other types may be available from specific software manufacturers.

Code	Definition
ES	The CONSTRAINT DATE shall replace an activity’s early start date, if the early start date is prior to the CONSTRAINT DATE.
IF	The CONSTRAINT DATE shall replace an activity’s late finish date, if the late finish date is after the CONSTRAINT DATE.

8 The CALENDAR CODE, as previously explained, relates this activity to an appropriate work-week calendar. The ACTIVITY DURATION must be based on the valid work-week referenced by this CALENDAR CODE field (See paragraph 12.e.4).

9 The HAMMOCK CODE indicates that a particular activity does not have its own independent duration, but takes its start dates from the start date of the preceding activity (or mode) and takes its finish dates from the finish dates of its succeeding activity (or mode). If the value of the HAMMOCK ACTIVITY field is "Y", then the activity is a HAMMOCK ACTIVITY.

10 The WORKERS PER DAY is an optional field that shall be specified at the discretion of the Field Operating Agency (FOA). This field shall contain the average number of workers expected to work on the activity each day the activity is in progress. The total duration times the average number of workers per day shall equal the Contractor's estimate of the total man days of work required to perform the activity.

11 The RESPONSIBILITY CODE shall identify the Subcontractor or major trade involved with completing the work for the activity.

12 The WORK AREA CODE shall identify the location of the activity within the project.

13 The MOD OR CLAIM NUMBER code is an optional field that shall be specified at the discretion of the Field Operating Agency (FOA). This code shall uniquely identify activities that are changed on a construction contract modification, or activities that justify any claimed time extensions.

14 The BID ITEM field is an optional field that shall be specified at the discretion of the Field Operating Agency (FOA). This field shall designate the bid item number associated with the activity.

15 The CONSTRUCTION SPECIFICATION INSTITUTE MASTERFORMAT CSI CODE is an optional field that shall be specified at the discretion of the Field Operating Agency (FOA). The CSI CODE shall contain the value of code corresponding to the work to be accomplished in this activity.

16 USER DEFINED fields are optional and not required to meet the data exchange standard. They are provided to allow for a fixed expansion of capabilities for individual very large projects that may require additional fields.

(f) Precedence Record: The Precedence Record(s) shall follow the Activity Records if a Precedence Type Schedule (PDM) is identified in the ARROW OR PRECEDENCE field of the Project Record (see paragraph 12.b.6). The Precedence Record has the following format:

Description	Column Position	Max. Len.	Reqd. Value	Type	Just.
RECORD IDENTIFIER	1- 4	4	PRED	Fixed	
ACTIVITY IDENTIFICATION	6- 15	10	-	Integer	See (2)
PRECEDING ACTIVITY	17- 26	10	-	Integer	
PREDECESSOR TYPE	28- 29	2	-	See (4)	
LAG DURATION	31- 34	4	-	Integer	Right

1 The RECORD IDENTIFIER shall begin with the four character "PRED" in the first four columns of the record.

2 The ACTIVITY IDENTIFICATION identifies the activity whose predecessor shall be specified in this record. Refer to the Activity Record for further explanation on this field (see paragraph 12.e.2).

3 The PREDECESSOR ACTIVITY number is the number of an activity that proceeds the activity noted in the ACTIVITY IDENTIFICATION field.

4 The PREDECESSOR TYPE field indicates the type of relationship that exists between the chosen pair of activities. The PREDECESSOR TYPE field must, as a minimum, contain one of the codes listed below. Other types of activity relations may be supported from specific software vendors.

Code	Definition

SS Start-to-Start relationship
FF Finish-to-Finish relationship
FS Finish-to-Start relationship

5 The LAG DURATION field contains the number of days delay between the preceding and current activity.

(g) Unit Cost Record: The Unit Cost Record shall follow all Precedence Records. If the schedule utilizes the ARROW DIAGRAM METHOD, then the Unit Cost Record shall follow any Activity Records. The fields for this record shall take the following format:

Description	Column Position	Max. Len.	Reqd. Value	Type	Just.
RECORD IDENTIFIER	1- 4	4	UNIT	Fixed	
ACTIVITY IDENTIFICATION	6- 15	10	-	Integer	See (2)
TOTAL QTY	17- 27	11	-	Floating	Pt.
COST PER UNIT	29- 39	11	-	Floating	Pt.
QTY TO DATE	41- 51	11	-	Floating	Pt.
UNIT OF MEASURE	53- 55	3	-	Alpha.	

1 The RECORD IDENTIFIER shall be identified with the four character "UNIT" placed in the first four columns of the record.

2 The ACTIVITY IDENTIFICATION for each activity shall match the format described in the activity record (see paragraph 12.e.2).

3 The TOTAL QTY is the total amount of this type of material to be used in this activity. This number consists of eight digits, one decimal point, and two more digits. An example of a number in this format is "11111111.11". If the decimal places are not needed, this field shall still contain a ".00" in columns 25, 26, and 27.

4 The COST PER UNIT is the cost, in dollars and cents, for each unit to be used in this activity. This number consists of eight digits, one decimal point, and two more digits. An example of a number in this format is "11111111.11". If the decimal places are not needed, this field shall still contain a ".00" in columns 37, 38, and 39.

5 The QTY TO DATE is the quantity of material installed in this activity up to the data date. This number consists of eight digits, one decimal point, and two more digits. If the decimal places are not needed, this field shall still contain a ".00" in columns 49, 50, and 51.

6 The UNIT OF MEASURE is an abbreviation that may be used to describe the units being measured for this activity.

(h) Progress Record: Progress Record(s) shall follow all Unit Cost Record(s). If there are no Unit Cost Record(s), then the Progress Record(s) shall follow all Precedence Records. If the schedule utilizes the Arrow Diagram Method, then the Progress Record shall follow any Activity Records. One Record shall exist for each activity in-progress or completed. The fields for this Record shall take the following format:

Description	Column Position	Max. Len.	Reqd. Value	Type	Just.
RECORD IDENTIFIER	1- 4	4	PROG	Fixed	
ACTIVITY IDENTIFICATION	6- 15	10	-	Integer	See (2)
ACTUAL START DATE	17- 23	7	-	ddmmyy	Full
ACTUAL FINISH DATE	25- 31	7	-	ddmmyy	Full
REMAINING DURATION	33- 35	3	-	Integer	Right
COST TO DATE	37- 45	9	-	Integer	Right

1 The RECORD IDENTIFIER shall begin with the four character "PROG" in the first four columns of the record.

2 The ACTIVITY IDENTIFICATION for each activity for which progress has been posted, shall match the format described in the Activity Record (see paragraph 12.e.2).

3 An ACTUAL START DATE is required for all in-progress activities. The ACTUAL START DATE shall be the same as, or later then, the PROJECT START date contained in the Project Record (see paragraph 12.b.8). The ACTUAL START DATE shall also be the same as, or prior to, the DATA DATE contained in the Project Record (see Paragraph 12.b.2).

4 An ACTUAL FINISH DATE is required for all completed activities. If the REMAINING DURATION of an activity is zero, then there must be an ACTUAL FINISH DATE. The ACTUAL FINISH DATE must be the same as, or later than the PROJECT START date contained in the Project Record (see paragraph 12.b.8). The ACTUAL FINISH DATE must also be the same as, or prior to the DATA DATE contained in the Project Record (see paragraph 12.b.2).

5 A REMAINING DURATION is required for all in-progress activities. Activities completed, based on time, shall have a zero (0) REMAINING DURATION.

6 Cost progress is contained in the field COST TO DATE. If there is an ACTUAL START DATE, then there must also be some value for COST TO DATE. The COST TO DATE is not tied to REMAINING DURATION. For example, if the REMAINING DURATION is "0", the COST TO DATE may only be 95% of the ACTIVITY COST. This difference may be used to reflect 5% retainage for punch list items.

(i) File End Record:

1 The File End Record shall be used to identify that the data file is completed. This record shall be the last record of the entire data file. The File End Record shall have the following format:

Description	Column Position	Max. Len.	Reqd. Value	Type	Just.
RECORD IDENTIFIER	1- 3	3	END	Fixed	

2 The RECORD IDENTIFIER for the File End Record shall be "END". No data contained in the data exchange file that occurs after this record is found shall be used.

PART 2 PRODUCTS (NOT APPLICABLE)

PART 3 EXECUTION (NOT APPLICABLE)

-- End of Section --

INDEX

SECTION 01415

METRIC MEASUREMENTS

PARAGRAPH		PAGE
PART 1	GENERAL	1
1.1	REFERENCES	1
1.2	GENERAL	1
1.3	USE OF MEASUREMENTS	1
1.4	COORDINATION	2
1.5	RELATIONSHIP TO SUBMITTALS	2
PART 2	PRODUCTS (NOT APPLICABLE)	2
PART 3	EXECUTION (NOT APPLICABLE)	2

SECTION 01415

METRIC MEASUREMENTS

PART 1 GENERAL

1.1 REFERENCES

The publications listed below form a part of this specification to the extent referenced. The publications are referred to in the text by basic designation only.

AMERICAN SOCIETY FOR TESTING AND MATERIALS (ASTM)

ASTM E 380	(1993) Practice for Use of the International System of Units (SI)
ASTM E 621	(1994) Practice for Use of Metric (SI) Units in Building Design and Construction

1.2 GENERAL

This project includes metric units of measurements. The metric units used are the International System of Units (SI) developed and maintained by the General Conference on Weights and Measures (CGPM); the name International System of Units and the international abbreviation SI were adopted by the 11th CGPM in 1960. A number of circumstances require that both metric SI units and English inch-pound (I-P) units be included in a section of the specifications. When both metric and I-P measurements are included, the section may contain measurements for products that are manufactured to I-P dimensions and then expressed in mathematically converted metric value (soft metric) or, it may contain measurements for products that are manufactured to an industry recognized rounded metric (hard metric) dimensions but are allowed to be substituted by I-P products to comply with the law. Dual measurements are also included to indicate industry and/or Government standards, test values or other controlling factors, such as the code requirements where I-P values are needed for clarity or to trace back to the referenced standards, test values or codes.

1.3 USE OF MEASUREMENTS

Measurements shall be either in SI or I-P units as indicated, except for soft metric measurements or as otherwise authorized. The Contractor shall be responsible for all associated labor and materials when authorized to substitute one system of units for another and for the final assembly and performance of the specified work and/or products.

1.3.1 Hard Metric

A hard metric measurement is indicated by an SI value with no expressed correlation to an I-P value, i.e., where an SI value is not an exact mathematical conversion of an I-P value, such as the use of 100 mm in lieu of 4 inches. Hard metric measurements are often used for field data such as distance from one point to another or distance above the floor. Products are considered to be hard metric when they are manufactured to metric dimensions or have an industry recognized metric designation.

1.3.2 Soft Metric

a. A soft metric measurement is indicated by an SI value which is a mathematical conversion of the I-P value shown in parentheses (e.g. 38.1 mm (1-1/2 inches)). Soft metric measurements are used for measurements pertaining to products, test values, and other situations where the I-P units are the standard for manufacture, verification, or other controlling factor. The I-P value shall govern while the metric measurement is provided for information.

b. A soft metric measurement is also indicated for products that are manufactured in industry designated metric dimensions but are required by law to allow substitute I-P products. These measurements are indicated by a manufacturing hard metric product dimension followed by the substitute I-P equivalent value in parentheses (e.g., 190 x 190 x 390 mm (7-5/8 x 7-5/8 x 15-5/8 inches)).

1.3.3 Neutral

A neutral measurement is indicated by an identifier which has no expressed relation to either an SI or an I-P value (e.g., American Wire Gage (AWG) which indicates thickness but in itself is neither SI nor I-P).

1.4 COORDINATION

Discrepancies, such as mismatches or product unavailability, arising from use of both metric and non-metric measurements and discrepancies between the measurements in the specifications and the measurements in the drawings shall be brought to the attention of the Contracting Officer for resolution.

1.5 RELATIONSHIP TO SUBMITTALS

Submittals for Government approval or for information only shall cover the SI or I-P products actually being furnished for the project. The Contractor shall submit the required drawings and calculations in the same units used in the contract documents describing the product or requirement unless otherwise instructed or approved. The Contractor shall use ASTM E 380 and ASTM E 621 as the basis for establishing metric measurements required to be used in submittals.

PART 2 PRODUCTS (NOT APPLICABLE)

PART 3 EXECUTION (NOT APPLICABLE)

-- End of Section --

INDEX

SECTION 01440

CONTRACTOR QUALITY CONTROL

PARAGRAPH		PAGE
PART 1	GENERAL	1
1.1	REFERENCES	1
PART 2	PRODUCTS (Not Applicable)	1
PART 3	EXECUTION	1
3.1	GENERAL	1
3.2	QUALITY CONTROL PLAN	2
3.3	COORDINATION MEETING	3
3.4	QUALITY CONTROL ORGANIZATION	3
3.5	SUBMITTALS	4
3.6	CONTROL	4
3.7	TESTS	6
3.8	COMPLETION INSPECTION	7
3.9	DOCUMENTATION	8
3.10	IMPLEMENTATION OF GOVERNMENT RESIDENT MANAGEMENT SYSTEM	9
3.11	SAMPLE FORMS	9
3.12	NOTIFICATION OF NONCOMPLIANCE	9

SECTION 01440

CONTRACTOR QUALITY CONTROL

PART 1 GENERAL

1.1 REFERENCES

The publications listed below form a part of this specification to the extent referenced. The publications are referred to in the text by basic designation only.

AMERICAN SOCIETY FOR TESTING AND MATERIALS (ASTM)

ASTM D 3740	(1994a) Minimum Requirements for Agencies Engaged in the Testing and/or Inspection of Soil and Rock as Used in Engineering Design and Construction
ASTM E 329	(1993b) Agencies Engaged in the Testing and/or Inspection of Materials Used in Construction

SACRAMENTO DISTRICT CONSTRUCTION CONTROL MANUAL

Latest edition published by the U.S. Army Engineer District-Sacramento, Sacramento, California. Copies of this publication are available upon request from the Sacramento District Office during the bidding period. In addition, two copies of the Manual and an initial supply of test forms will be furnished to the successful bidder upon award of this contract. This Manual specifies the minimum number of tests to be made and includes forms which shall be used to report data.

SPK FORM 437 - MATERIALS TEST SUMMARY

Published by U.S. Army Engineer District - Sacramento, Sacramento, California. One set of this form (6 pages), is included in the bid package issued by the Sacramento District Office. This form will be used to summarize the minimum number of materials testing to be made during construction. The successful bidder shall submit three copies of the form to the Contracting Officer’s Representative during the preconstruction meeting. To complete the form, the use of the Construction Control Manual is mandatory.

PART 2 PRODUCTS (Not Applicable)

PART 3 EXECUTION

3.1 GENERAL

The Contractor is responsible for quality control and shall establish and maintain an effective quality control system in compliance with the Contract Clause entitled "Inspection of Construction." The quality control system shall consist of plans, procedures, and organization necessary to produce an end product which complies with the contract requirements. The system shall cover all construction operations, both onsite and offsite, and shall be keyed to the proposed construction sequence. The project superintendent will be held responsible for the quality of work on the job and is subject to removal by the Contracting Officer for non-compliance with quality requirements specified in the contract. The project superintendent in this context shall mean the individual with the responsibility for the overall management of the project including quality and production.

3.2 QUALITY CONTROL PLAN

3.2.1 General

The Contractor shall furnish for review by the Government, not later than 15 days after receipt of notice to proceed, the Contractor Quality Control (CQC) Plan proposed to implement the requirements of Section 00800, Paragraph, "Inspection of Construction." The plan shall identify personnel, procedures, control, instructions, test, records, and forms to be used. Construction will be permitted to begin only after acceptance of the CQC Plan unless specific written authority is granted by the Contracting Officer. Work outside of the features of work included in an accepted plan will not be permitted to begin until acceptance of a CQC Plan or an interim plan containing the additional features of work to be started.

3.2.2 Content of the CQC Plan

The CQC Plan shall include, as a minimum, the following to cover all construction operations, both onsite and offsite, including work by subcontractors, fabricators, suppliers, and purchasing agents:

a. A description of the quality control organization, including a chart showing lines of authority and acknowledgment that the CQC staff shall implement the three phase control system for all aspects of the work specified. The staff shall include a CQC System Manager who shall report to the project superintendent.

b. The name, qualifications (in resume format), duties, responsibilities, and authorities of each person assigned a CQC function.

c. A copy of the letter to the CQC System Manager signed by an authorized official of the firm which describes the responsibilities and delegates sufficient authorities to adequately perform the functions of the CQC System Manager, including authority to stop work which is not in compliance with the contract. The CQC System Manager shall issue letters of direction to all other various quality control representatives outlining duties, authorities, and responsibilities. Copies of these letters will also be furnished to the Government.

d. Procedures for scheduling, reviewing, certifying, and managing submittals, including those of subcontractors, offsite fabricators, suppliers, and purchasing agents. These procedures shall be in accordance with Section 01300 SUBMITTAL PROCEDURES.

e. Control, verification, and acceptance testing procedures for each specific test to include the test name, specification paragraph requiring test, feature of work to be tested, test frequency, and person responsible for each test. (Laboratory facilities will be approved by the Contracting Officer.)

f. Procedures for tracking preparatory, initial, and follow-up control phases and control, verification, and acceptance tests including documentation.

g. Procedures for tracking construction deficiencies from identification through acceptable corrective action. These procedures will establish verification that identified deficiencies have been corrected.

h. Reporting procedures, including proposed reporting formats.

I. A list of the definable features of work. A definable feature of work is a task which is separate and distinct from other tasks and has separate control requirements. It could be identified by different trades or

disciplines, or it could be work by the same trade in a different environment. Although each section of the specifications may generally be considered as a definable feature of work, there are frequently more than one definable feature under a particular section. This list will be agreed upon during the coordination meeting.

3.2.3 Acceptance of Plan

Acceptance of the Contractor's plan is required prior to the start of construction. Acceptance is conditional and will be predicated on satisfactory performance during the construction. The Government reserves the right to require the Contractor to make changes in his CQC Plan and operations including removal of personnel, as necessary, to obtain the quality specified.

3.2.4 Notification of Changes

After acceptance of the CQC Plan, the Contractor shall notify the Contracting Officer in writing of any proposed change. Proposed changes are subject to acceptance by the Contracting Officer.

3.3 COORDINATION MEETING

After the Preconstruction Conference, before start of construction, and prior to acceptance by the Government of the CQC Plan, the Contractor shall meet with the Contracting Officer or Authorized Representative and discuss the Contractor's quality control system. The CQC Plan shall be submitted for review a minimum of 14 calendar days prior to the Coordination Meeting. During the meeting, a mutual understanding of the system details shall be developed, including the forms for recording the CQC operations, control activities, testing, administration of the system for both onsite and offsite work, and the interrelationship of Contractor's Management and control with the Government's Quality Assurance. Minutes of the meeting shall be prepared by the Government and signed by both the Contractor and the Contracting Officer. The minutes shall become a part of the contract file. There may be occasions when subsequent conferences will be called by either party to reconfirm mutual understandings and/or address deficiencies in the CQC system or procedures which may require corrective action by the Contractor.

3.4 QUALITY CONTROL ORGANIZATION

3.4.1 General

The requirements for the CQC organization are a CQC System Manager and sufficient number of additional qualified personnel to ensure contract compliance. The Contractor shall provide a CQC organization which shall be at the site at all times during progress of the work and with complete authority to take any action necessary to ensure compliance with the contract. All CQC staff members shall be subject to acceptance by the Contracting Officer.

3.4.2 CQC System Manager

The Contractor shall identify as CQC System Manager an individual within his organization at the site of the work who shall be responsible for overall management of CQC and have the authority to act in all CQC matters for the Contractor. The CQC System Manager shall be a construction person with a minimum of 5 years in related work. This CQC System Manager shall be on the site at all times during construction and will be employed by the prime Contractor. The CQC System Manager shall be assigned no other duties. An alternate for the CQC System Manager will be identified in the plan to serve in the event of the System Manager's absence. The requirements for the alternate will be the same as for the designated CQC System Manager.

3.4.3 CQC Personnel

In addition to CQC personnel specified elsewhere in the contract, the Contractor shall provide as part of the CQC organization specialized personnel to assist the CQC System Manager for the following areas: electrical, mechanical, structural and architectural. These individuals shall be directly employed by the prime Contractor, unless waived in writing by the Contracting Officer; be responsible to the CQC System Manager; be physically present at the construction site during work on their areas of responsibility; have the necessary education and/or experience in accordance with the experience matrix listed herein. These individuals shall have no other duties other than quality control.

Experience Matrix

Area	Qualifications
a. Mechanical	Graduate Mechanical Engineer with 2 yrs experience or person with 5 yrs related experience
b. Electrical	Graduate Electrical Engineer with 2 yrs related experience or person with 5 yrs related experience
c. Structural	Graduate Structural Engineer with 2 yrs experience or person with 5 yrs related experience
d. Architectural	Graduate Architect with 2 yrs experience or person with 5 yrs related experience

3.4.4 Additional Requirement

In addition to the above experience and/or education requirements the CQC System Manager shall have completed the course entitled "Construction Quality Management For Contractors". This course is periodically offered by the Sacramento District, contact the Contracting Officer for more information.

3.4.5 Organizational Changes

The Contractor shall maintain his CQC staff at full strength at all times. When it is necessary to make changes to the CQC staff the Contractor shall revise the CQC Plan to reflect the changes and submit the changes to the Contracting Officer for acceptance.

3.5 SUBMITTALS

Submittals shall be made as specified in Section 01300 SUBMITTAL PROCEDURES. The CQC organization shall be responsible for certifying that all submittals are in compliance with the contract requirements.

3.6 CONTROL

Contractor Quality Control is the means by which the Contractor ensures that the construction, to include that of subcontractors and suppliers, complies with the requirements of the contract. At least three phases of control shall

be conducted by the CQC System Manager for each definable feature of work as follows:

3.6.1 Preparatory Phase

This phase shall be performed prior to beginning work on each definable feature of work and shall include:

a. A review of each paragraph of applicable specifications.

b. A review of the contract drawings.

c. A check to assure that all materials and/or equipment have been tested, submitted, and approved.

d. Review of provisions that have been made to provide required control inspection and testing.

e. Examination of the work area to assure that all required preliminary work has been completed and is in compliance with the contract.

f. A physical examination of required materials, equipment, and sample work to assure that they are on hand, conform to approved shop drawings or submitted data, and are properly stored.

g. A review of the appropriate activity hazard analysis to assure safety requirements are met.

h. Discussion of procedures for controlling quality of the work including repetitive deficiencies. Document construction tolerances and workmanship standards for that feature of work.

I. A check to ensure that the portion of the plan for the work to be performed has been accepted by the Contracting Officer.

j. Discussion of the initial control phase.

k. The Government shall be notified at least 48 hours in advance of beginning the preparatory control phase. This phase shall include a meeting conducted by the CQC System Manager and attended by the superintendent, other CQC personnel (as applicable), and the foreman responsible for the definable feature. The results of the preparatory phase actions shall be documented by separate minutes prepared by the CQC System Manager and attached to the daily CQC report. The Contractor shall instruct applicable workers as to the acceptable level of workmanship required in order to meet contract specifications.

3.6.2 Initial Phase

This phase shall be accomplished at the beginning of a definable feature of work. The following shall be accomplished:

a. A check of work to ensure that it is in full compliance with contract requirements. Review minutes of the preparatory meeting.

b. Verify adequacy of controls to ensure full contract compliance. Verify required control inspection and testing.

c. Establish level of workmanship and verify that it meets minimum acceptable workmanship standards. Compare with required sample panels as appropriate.

d. Resolve all differences.

e. Check safety to include compliance with and upgrading of the safety plan and activity hazard analysis. Review the activity analysis with each worker.

f. The Government shall be notified at least 48 hours in advance of beginning the initial phase. Separate minutes of this phase shall be prepared by the CQC System Manager and attached to the daily CQC report. Exact location of initial phase shall be indicated for future reference and comparison with follow-up phases.

g. The initial phase should be repeated for each new crew to work onsite, or any time acceptable specified quality standards are not being met.

3.6.3 Follow-up Phase

Daily checks shall be performed to assure control activities, including control testing, are providing continued compliance with contract requirements, until completion of the particular feature of work. The checks shall be made a matter of record in the CQC documentation. Final follow-up checks shall be conducted and all deficiencies corrected prior to the start of additional features of work which may be affected by the deficient work. The Contractor shall not build upon or conceal non-conforming work.

3.6.4 Additional Preparatory and Initial Phases

Additional preparatory and initial phases shall be conducted on the same definable features of work if the quality of on-going work is unacceptable, if there are changes in the applicable CQC staff, onsite production supervision or work crew, if work on a definable feature is resumed after a substantial period of inactivity, or if other problems develop.

3.7 TESTS

3.7.1 Testing Procedure

The Contractor shall perform specified or required tests to verify that control measures are adequate to provide a product which conforms to contract requirements. Upon request, the Contractor shall furnish to the Government duplicate samples of test specimens for possible testing by the Government. Testing includes operation and/or acceptance tests when specified. The Contractor shall procure the services of a Corps of Engineers approved testing laboratory or establish an approved testing laboratory at the project site. The Contractor shall perform the following activities and record and provide the following data:

a. Verify that testing procedures comply with contract requirements.

b. Verify that facilities and testing equipment are available and comply with testing standards.

c. Check test instrument calibration data against certified standards.

d. Verify that recording forms and test identification control number system, including all of the test documentation requirements, have been prepared.

e. Results of all tests taken, both passing and failing tests, will be recorded on the CQC report for the date taken. Specification paragraph reference, location where tests were taken, and the sequential control number identifying the test will be given. If approved by the Contracting Officer, actual test reports may be submitted later with a reference to the test number and date taken. An information copy of tests performed by an offsite or commercial test facility will be provided directly to the Contracting Officer.

Failure to submit timely test reports as stated may result in nonpayment for related work performed and disapproval of the test facility for this contract.

3.7.2 Testing Laboratories

3.7.2.1 Capability Check

The Government reserves the right to check laboratory equipment in the proposed laboratory for compliance with the standards set forth in the contract specifications and to check the laboratory technician’s testing procedures and techniques. Laboratories utilized for testing soils, concrete, asphalt, and steel shall meet criteria detailed in ASTM D 3740 and ASTM E 329.

3.7.3 On-Site Laboratory

The Government reserves the right to utilize the Contractor’s control testing laboratory and equipment to make assurance tests and to check the Contractor’s testing procedures, techniques, and test results at no additional cost to the Government.

3.7.4 Furnishing or Transportation of Samples for Testing

Costs incidental to the transportation of samples or materials will be borne by the Contractor. Samples of materials for test verification and acceptance testing by the Government shall be delivered to the QA laboratory designated by the Contracting Officer.

Coordination for each specific test, exact delivery location and dates will be made through the Area Office.

3.8 COMPLETION INSPECTION

3.8.1 Pre-Final Inspection

At the completion of all work or any increment thereof established by a completion time stated in Section 00800, Paragraph "Commencement, Prosecution, and Completion of Work," or stated elsewhere in the specifications, the CQC System Manager shall conduct an inspection of the work and develop a "punch list" of items which do not conform to the approved drawings and specifications. Such a list of deficiencies shall be included in the CQC documentation, as required by paragraph DOCUMENTATION below, and shall include the estimated date by which the deficiencies will be corrected. Once this is accomplished the Contractor shall notify the Government that the facility is complete and is ready for the Government’s "Prefinal" inspection. The Government will perform this inspection to verify that the facility is complete and ready to be occupied. A Government "Prefinal Punch List" will be developed as a result of this inspection. The Contractor’s CQC System Manager shall ensure that all items on this list have been corrected and so notify the Government so that a "Final" inspection with the customer can be scheduled. Any items noted on the "Final" inspection shall be corrected in a timely manner. These inspections and any deficiency corrections required by this paragraph will be accomplished within the time slated for completion of the entire work or any particular increment thereof if the project is divided into increments by separate completion dates.

3.8.2 Final Acceptance Inspection

The Contractor’s Quality Control Inspection personnel, his superintendent or other primary management person and the Contracting Officer’s Representative will be in attendance at this inspection. Additional Government personnel including, but not limited to, those from Base/Post Civil Facility Engineer user groups, and major commands may also be in attendance. The final acceptance inspection will be formally scheduled by the Contracting Officer

based upon notice from the Contractor. This notice will be given to the Contracting Officer at least 14 days prior to the final acceptance inspection and must include the Contractor's assurance that all specific items previously identified to the Contractor as being acceptable, along with all remaining work performed under the contract, will be complete and acceptable by the date scheduled for the final acceptance inspection. Failure of the Contractor to have all contract work acceptably complete for this inspection will be cause for the Contracting Officer to bill the Contractor for the Government's additional inspection cost in accordance with Section 00800, Paragraph, "Inspection of Construction".

3.9 DOCUMENTATION

The Contractor shall maintain current records providing factual evidence that required quality control activities and/or tests have been performed. These records shall include the work of subcontractors and suppliers and shall be on an acceptable form that includes, as a minimum, the following information:

a. Contractor/subcontractor and their area of responsibility.

b. Operating plant/equipment with hours worked, idle, or down for repair.

c. Work performed each day, giving location, description, and by whom. When Network Analysis (NAS) is used, identify each phase of work performed each day by NAS activity number.

d. Test and/or control activities performed with results and references to specifications/drawings requirements. The control phase should be identified (Preparatory, Initial, Follow-up). List deficiencies noted along with corrective action.

e. Quantity of materials received at the site with statement as to acceptability, storage, and reference to specifications/drawings requirements.

f. Submittals reviewed, with contract reference, by whom, and action taken.

g. Off-site surveillance activities, including actions taken.

h. Job safety evaluations stating what was checked, results, and instructions or corrective actions.

I. Instructions given/received and conflicts in plans and/or specifications.

j. Contractor's verification statement.

These records shall indicate a description of trades working on the project; the number of personnel working; weather conditions encountered; and any delays encountered. These records shall cover both conforming and deficient features and shall include a statement that equipment and materials incorporated in the work and workmanship comply with the contract. The original and one copy of these records in report form shall be furnished to the Government daily within 24 hours after the date(s) covered by the report, except that reports need not be submitted for days on which no work is performed. As a minimum, one report shall be prepared and submitted for every seven days of no work and on the last day of a no work period. All calendar days shall be accounted for throughout the life of the contract. The first report following a day of no work shall be for that day only. Reports shall be signed and dated by the CQC System Manager. The report from the CQC System

Manager shall include copies of test reports and copies of reports prepared by all subordinate quality control personnel.

3.10 IMPLEMENTATION OF GOVERNMENT RESIDENT MANAGEMENT SYSTEM

The Contractor shall utilize a Government furnished CQC Daily Report Form. This form may be in addition to other Contractor desired reporting forms. However, all other such reporting forms shall be consolidated into this one Government furnished Daily CQC Report Form. The Contractor will also be required to complete Government-Furnished Input Forms which lists, but is not limited to, Prime Contractor staffing; letter codes; planned cumulative progress earnings; subcontractor information showing trade, name, address, and insurance expiration dates; definable features of work; pay activity and activity information; required Quality Control tests tied to individual activities; planned User Schooling tied to specific specification paragraphs and Contractor activities; and submittal information relating to specification section, description, activity number, review period and expected procurement period. The sum of all activity values shall equal the contract amount, and all Bid Items shall be separately identified, in accordance with the PRICING SCHEDULE. These forms shall be completed to the satisfaction of the Contracting Officer prior to any contract payment (except for Bonds, Insurance and/or Mobilization, as approved by the Contracting Officer) and shall be updated as required.

a. During the course of the contract, the Contractor will receive various Quality Assurance comments from the Government that will reflect corrections needed to Contractor activities or reflect outstanding or future items needing the attention of the Contractor. The Contractor will acknowledge receipt of these comments by specific number reference on his Daily CQC Report and will also reflect on his Daily CQC report when these items are specifically completed or corrected.

b. The Contractor’s schedule system shall include, as specific and separate activities, all Preparatory Phase Meetings (inspections); all O&M Manuals; and all Test Plans of Electrical and Mechanical Equipment or Systems that require validation testing or instructions to Government Representatives.

3.11 SAMPLE FORMS

Sample forms enclosed at the end of this section.

1. Test Report Form
2. Daily Contractor Quality Control Form
3. Preparatory Inspection Report Form
4. SPK 437 - Materials Test Summary

3.12 NOTIFICATION OF NONCOMPLIANCE

The Contracting Officer will notify the Contractor of any detected noncompliance with the foregoing requirements. The Contractor shall take immediate corrective action after receipt of such notice. Such notice, when delivered to the Contractor at the worksite, shall be deemed sufficient for the purpose of notification. If the Contractor fails or refuses to comply promptly, the Contracting Officer may issue an order stopping all or part of the work until satisfactory corrective action has been taken. No part of the time lost due to such stop orders shall be made the subject of claim for extension of time or for excess costs or damages by the Contractor in accordance with FAR 52.242-14.

-- End of Section --

(Sample of typical Contractor's Test Report)

TEST REPORT

STRUCTURAL OR BUILDING _____

CONTRACT NO. _____

DESCRIPTION OF ITEM, SYSTEM OR PART OF SYSTEM TESTED: _____

_____

_____

_____

_____

DESCRIPTION OF TEST: _____

_____

_____

_____

_____

_____

NAME AND TITLE OF PERSON IN CHARGE OF PERFORMING TESTS FOR CONTRACTOR:

NAME _____

TITLE _____

SIGNATURE _____

I HEREBY CERTIFY THAT THE ABOVE DESCRIBED ITEM, SYSTEM OR PART OF SYSTEM HAS BEEN TESTED AS INDICATED ABOVE AND FOUND TO BE ENTIRELY SATISFACTORY AS REQUIRED IN THE CONTRACT SPECIFICATIONS.

_____

SIGNATURE OF CONTRACTOR QUALITY CONTROL INSPECTOR

DATE _____

REMARKS: _____

_____

_____

_____

_____

_____

(Sample of Typical DAILY CONSTRUCTION QUALITY CONTROL REPORT)

CONTRACTOR'S NAME
(Address)

DAILY CONSTRUCTION QUALITY CONTROL REPORT

Date: _____ Report No. _____

Contract No.: _____

Name and Location of Project: _____

WEATHER: (Clear) (P. Cloudy) (Cloudy) Temperature: _____

Rainfall _____ Inches Min., _____ Max., _____

Contractor/Subcontractors	Area of Responsibility
a. _____	_____
b. _____	_____
c. _____	_____
d. _____	_____
e. _____	_____
f. _____	_____
g. _____	_____

1. WORK PERFORMED TODAY: (Indicate location and description of work performed. Refer to work performed by prime and/or subcontractors by letter in Table above.)

_____

2. PREPARATORY INSPECTION FOR NEXT ITEM OF WORK: (Materials/shop drawings approved, required control testing arranged, all preliminary work has been accomplished as per plans and specifications.)

3. INITIAL INSPECTION: (Address quality of workmanship, assure control testing and materials being used in all work are in compliance with plans and specifications).

---

4. FOLLOW-UP INSPECTIONS: (Assure control testing performed as required and all work performed continues to be in compliance with plans and specifications).

---

5. VERBAL INSTRUCTIONS RECEIVED: (List any instructions given by Government personnel on construction deficiencies, retesting required, etc., with action to be taken.)

---

6. REMARKS: (Cover any conflicts in plans, specifications, or instructions or any delay to the job attributable to weather conditions.)

7. RESULTS OF SAFETY INSPECTION: (Note safety violations and corrective action taken. Indicate phase of work where violations occurred.)

---

8. UPCOMING WORK: (Indicate next major phase of work anticipated and approximate date of Preparatory Inspection meeting to cover this work.)

EQUIPMENT DATA: (Indicate items of construction equipment, other than hand tools, at the job site and whether or not used.)

CONTRACTOR'S VERIFICATION: The above report is complete and correct and all material and equipment used and work performed during this reporting period area in compliance with the contract plans and specifications except as noted above.

_____

Contractor's Approved/Authorized Representative

(Sample of Typical Form)

PREPARATORY INSPECTION OUTLINE
(PART-I)

Contract No.: _____ Date: _____

Title and No. of Technical Section: _____

_____

Reference Contract Drawings: _____

A. PLANNED ATTENDANTS:

	NAME	POSITION	COMPANY
1.			
2.			
3.			
4.			

B. SUBMITTALS REQUIRED TO BEGIN WORK:

	ITEM	SUBMITTAL NO.	ACTION CODE
a.			
b.			
c.			
d.			

I HEREBY DECLARE THAT THE ABOVE REQUIRED MATERIALS DELIVERED TO THE JOBSITE ARE CERTIFIED TO BE THE SAME AS THOSE SUBMITTED AND APPROVED.

_____
QUALITY CONTROL REPRESENTATIVE

C. EQUIPMENT TO BE USED IN EXECUTING WORK:

a. _____
b. _____
c. _____

D. WORK AREAS EXAMINED TO ASCERTAIN THAT ALL PRELIMINARY WORK HAS BEEN COMPLETED:

_____
_____

E. METHODS AND PROCEDURES FOR PERFORMING QUALITY CONTROL - INCLUDING SPECIFIC TESTING REQUIREMENTS:

_____
_____

F. COMPLIANCE WITH AND UPGRADING OF THE SAFETY PLAN AND ACTIVITY HAZARD ANALYSIS INCLUDING REVIEW OF THE ACTIVITY ANALYSIS WITH EACH WORKER:

_____
_____

THE ABOVE METHODS AND PROCEDURES OUTLINED ARE CERTIFIED TO COMPLY WITH THE CONTRACT REQUIREMENTS AND WILL BE PERFORMED AS PLANNED AND SPECIFIED.

_____
QUALITY CONTROL REPRESENTATIVE

(Sample of Typical Form)

PREPARATORY INSPECTION OUTLINE
(PART - II)

A. PERSONS IN ATTENDANCE:

	NAME	POSITION	COMPANY
1.			
2.			
3.			
4.			
5.			
6.			

B. ITEMS OF MUTUAL UNDERSTANDING DEVELOPED DURING REVIEW OF PREPARATORY OUTLINE AND CONTRACT REQUIREMENTS: (Contract items not specifically covered during the preparatory inspection conference are assumed to be in strict conformance with the contract requirements.)

1. _____

2. _____

3. _____

4. _____

5. _____

6. _____

7. _____

8. _____

THE ITEMS NOTED ABOVE CONSTITUTE A MEMORANDUM OF MUTUAL UNDERSTANDING AND WILL BE PERFORMED AS PLANNED AND SPECIFIED.

_____
CONTRACTOR'S APPROVED/AUTHORIZED REPRESENTATIVE

(Sample of Typical Form)

INITIAL PHASE CHECK LIST

Contract No.: _____ Date: _____

Specification Paragraph or Section: _____

Description and Location of Work Inspected: _____

_____

REFERENCE CONTRACT DRAWINGS: _____

A. PERSONNEL PRESENT:

	NAME	POSITION	COMPANY
1.			
2.			
3.			
4.			

B. MATERIALS BEING USED ARE IN STRICT COMPLIANCE WITH THE CONTRACT PLANS AND SPECIFICATIONS: YES_____ NO_____

IF NOT, EXPLAIN: _____

_____

_____

C. PROCEDURES AND/OR WORK METHODS WITNESSED ARE IN STRICT COMPLIANCE WITH THE CONTRACT SPECIFICATIONS: YES_____ NO_____

IF NOT, EXPLAIN: _____

_____

_____

D. WORKMANSHIP IS ACCEPTABLE: YES_____ NO_____

STATE AREAS WHERE IMPROVEMENT IS NEEDED: _____

_____

_____

E. SAFETY VIOLATIONS NOTED: YES_____ NO_____

IF YES, CORRECTIVE ACTION TAKEN: _____

_____

_____

_____
QUALITY CONTROL REPRESENTATIVE

MATERIALS TEST SUMMARY

(See reverse for instructions)

CONTRACT NUMBER	PROJECT	DATE

SECTION/TITLE	TEST	MINIMUM TESTS *(Estimated)*		TOTAL TESTS *(Performed)*			
				CQC		QA	
		CQC	QA	PASS	FAIL	PASS	FAIL
2_____ GRADING	A. LAB-MOISTURE DENSITY W/GRADATION						
	& ATTERBERG LIMITS						
	B. FIELD DENSITY*						
	**(Select materials with gradation)*						
2_____ BUILDINGS	A. LAB-MOISTURE DENSITY W/GRADATION						
	& ATTERBERG LIMITS						
	B. FIELD DENSITY*						
	**(Select materials with gradation)*						
2_____ UTILITIES SYSTEM	A. LAB-MOISTURE DENSITY W/GRADATION						
	& ATTERBERG LIMITS						
	B. FIELD DENSITY*						
	**(Select materials with gradation)*						
2_____ DRAINAGE SYSTEM	A. LAB-MOISTURE DENSITY W/GRADATION						
	& ATTERBERG LIMITS						
	B. FIELD DENSITY*						
	**(Select materials with gradation)*						

MATERIALS TEST SUMMARY

CONTRACT NUMBER	PROJECT	DATE

SECTION/TITLE	TEST	MINIMUM TESTS (Estimated)		TOTAL TESTS (Performed)			
				CQC		QA	
		CQC	QA	PASS	FAIL	PASS	FAIL
2_____ SUBGRADE ROADWAYS	A. LAB-MOISTURE DENSITY W/GRADATION						
	& ATTERBERG LIMITS						
	B. FIELD DENSITY W/GRADATION						
2_____ SUBBASE COURSE	A. LAB-MOISTURE DENSITY W/GRADATION						
	& ATTERBERG LIMITS						
	B. FIELD DENSITY W/GRADATION						
2_____ BASE COURSE	A. LAB-MOISTURE DENSITY W/GRADATION						
	& ATTERBERG LIMITS						
	B. FIELD DENSITY W/GRADATION						
2_____ BITUMINOUS COURSE	A. MARSHALL METHOD						
	B. EXTRACTION (HOT MIX)						
	C. GRADATION (HOT MIX)						
	D. GRADATION (HOT BINS)						
	E. FIELD COMPACTION (CORES)						

MATERIALS TEST SUMMARY

CONTRACT NUMBER	PROJECT	DATE

SECTION/TITLE	TEST	MINIMUM TESTS (Estimated)		TOTAL TESTS (Performed)			
				CQC		QA	
		CQC	QA	PASS	FAIL	PASS	FAIL
2_____ CONCRETE-PAVEMENT	A. *STRENGTH						
	B. SLUMP						
	C. ENTRAINED AIR						
	D. GRADATION						
*(COMPRESSIVE) *(FLEXURAL)							
2_____ SIDEWALK, CURB, & GUTTER	A. COMPRESSIVE STRENGTH						
	B. SLUMP						
	C. ENTRAINED AIR						
	D. GRADATION						
2_____							
2_____							

MATERIALS TEST SUMMARY

CONTRACT NUMBER	PROJECT	DATE

SECTION/TITLE	TEST	MINIMUM TESTS (Estimated)		TOTAL TESTS (Performed)			
				CQC		QA	
		CQC	QA	PASS	FAIL	PASS	FAIL
3_____ CONCRETE – BUIDLING	A. COMPRESSIVE STRENGTH						
	B. SLUMP						
	C. ENTRAINED AIR						
	D. GRADATION						
3_____ CONCRETE – LITEWEIGHT	A. COMPRESSIVE STRENGTH						
	B. SLUMP						
	C. ENTRAINED AIR						
	D. UNIT WEIGHT (PLASTIC)						
	E. UNIT WEIGHT (28 DAY–DRY)						
	F. GRADATION						
3_____ CONCRETE – TILT UP	A. COMPRESSIVE STRENGTH						
	B. SLUMP						
	C. ENTRAINED AIR						
	D. GRADATION						
3_____							

CESPK FORM 437
1 AUG 88

MATERIALS TEST SUMMARY

CONTRACT NUMBER	PROJECT	DATE

SECTION/TITLE	TEST	MINIMUM TESTS (Estimated)		TOTAL TESTS (Performed)			
				CQC		QA	
		CQC	QA	PASS	FAIL	PASS	FAIL
4_____ MASONRY	A. MORTAR COMPRESSIVE STRENGTH						
	B. GROUT COMPRESSIVE STRENGTH						
	C. GRADATION						
	D. CMU – SHRINKAGE, AIR DRY						
	CONDITION, UNIT WEIGHT						
	& COMPRESSIVE STRENGTH						

INSTRUCTIONS FOR COMPLETION OF CESPK FORM 437
MATERIALS TEST SUMMARY

1. **All entries shall be made with pen.**

2. **SECTION/TITLE**: Sections which require contractor quality control testing during the placement of construction materials are listed. The titles are condensed versions of the full specification title. Review the technical specifications and complete as follows:

   A. Insert after a number the applicable letter to complete the section designation. For example, 2____ grading to 2_A_ grading.

   B. If a section is not a part of the technical specifications, insert 'not applicable' (N/A) after a number. For example, 2_____ grading to 2_N/A_ grading.

   C. Blank spaces are provided to permit addition of other sections as required by the specifications.

3. **TEST**: Tests that are specified to be performed by the technical specifications are listed for each section. Blank spaces are provided for additional tests as required by the specifications. An asterisk indicates that action should be taken as noted. For example, gradation must be taken when testing field density for select materials in **SECTION: GRADING**.

4. **MINIMUM TESTS (ESTIMATED)**: Under the Contractor Quality Control (CQC) column, enter the minimum number of tests required to accomplish the specified work. For the prelisted selections, the test frequencies are specified in the Construction Control Manual (CCM). For an additive section, the CCM may not indicate the test frequency. In this case, check the technical specifications or the contract drawings for requirements. Quality Assurance (QA) column will be completed by the Contracting Officer Representative (COR).

5. **TOTAL TESTS (PERFORMED)**: CQC and QA columns will be completed by the COR.

*U.S. GPO: 1989-785-022/13508

INDEX

SECTION 01500

TEMPORARY CONSTRUCTION FACILITIES

PARAGRAPH		PAGE
PART 1	GENERAL	1
1.1	APPLICABLE PUBLICATIONS	1
1.2	GENERAL REQUIREMENTS	1
1.3	AVAILABILITY AND USE OF UTILITY SERVICES	2
1.4	BULLETIN BOARD, PROJECT SIGN, AND PROJECT SAFETY SIGN	2
1.5	SCRAP MATERIAL	3
1.6	WRITTEN GUARANTEES AND GUARANTOR’S LOCAL REPRESENTATIVE	3
1.7	PRICING OF CONTRACTOR-FURNISHED PROPERTY	4
1.8	TEMPORARY ELECTRIC WIRING	4
1.9	UTILITIES NOT SHOWN	4
1.10	GENERAL SAFETY REQUIREMENTS	5
1.11	PLANNED UTILITY OUTAGES AND STREET CLOSURES	7
1.12	PROTECTION AND MAINTENANCE OF TRAFFIC	7
1.13	EXCAVATION PERMITS	8
1.14	TIME EXTENSIONS FOR UNUSUALLY SEVERE WEATHER	8
1.15	CONTRACTOR’S TEMPORARY FACILITIES	8
1.16	HOUSEKEEPING AND CLEANUP	9
1.17	RESTORATION OF STORAGE AREA	10
1.18	EQUIPMENT OWNERSHIP AND OPERATING EXPENSE SCHEDULE	10
1.19	EQUIPMENT DATA FORM	11
1.20	SPECIAL CONSTRUCTION RESTRAINTS/REQUIREMENTS	11
1.21	SPECIAL PHASING REQUIREMENTS	14
1.22	SOIL DENSITY TEST (USING METERS CONTAINING RADIOACTIVE MATERIALS)	16
PART 2	PRODUCTS (NOT APPLICABLE)	17
PART 3	EXECUTION (NOT APPLICABLE)	17

SECTION 01500

TEMPORARY CONSTRUCTION FACILITIES

PART 1 GENERAL

1.1 APPLICABLE PUBLICATIONS:

The publications listed below form a part of this specification to the extent referenced. The publications are referred to in the text by the basic designation only.

DEPARTMENT OF COMMERCE (DOC)

DOC PS 1	(1983) Construction and Industrial Plywood
DOC PS 20	(1970) American Softwood Lumber Standard.

FEDERAL SPECIFICATIONS (FS)

FS TT-P-001984	(Basic) Primer Coating, Latex Base, Exterior, (Undercoat for Wood), White and Tints

AMERICAN NATIONAL STANDARDS INSTITUTE (ANSI)

ANSI Z535.1	(1991) Safety Color Code

AMERICAN SOCIETY FOR TESTING AND MATERIALS (ASTM)

ASTM F 547	(1977; R 1990) Definitions of Terms Relating to Nails for Use with Wood and Wood-Base Materials

U.S. ARMY CORPS OF ENGINEERS

EM 385-1-1	Safety and Health Requirements Manual (1 October 1992).

WEST COAST LUMBER INSPECTION BUREAU (WCLIB)

WCLIB 16	(1970; Rev 1983) Standard Grading and Dressing Rules for Douglas Fir, Western Hemlock, Western Red Cedar, White Fir, Sitka Spruce Lumber

WESTERN WOOD PRODUCTS ASSOCIATION (WWPA)

WWPA-01	(1991; Supple No. 1) Western Lumber Grading Rules 91

1.2 GENERAL REQUIREMENTS

1.2.1 Site Plan

The Contractor shall prepare a site plan indicating the proposed location and dimensions of any area to be fenced and used by the Contractor, the number of trailers to be used, avenues of ingress/egress to the fenced area and details of

the fence installation. Any areas which may have to be graveled to prevent the tracking of mud shall also be identified. The Contractor shall also indicate if the use of a supplemental or other staging area is desired.

1.2.2 Identification of Employees

The Contractor shall be responsible for furnishing to each employee and for requiring each employee engaged on the work to display identification as approved and directed by the Contracting Officer. Prescribed identification shall immediately be delivered to the Contracting Officer for cancellation upon release of any employee. When required, the Contractor shall obtain and provide fingerprints of persons employed on the project. Contractor and subcontractor personnel shall wear identifying markings on hard hats clearly identifying the company for whom the employee works.

1.2.3 Employee Parking

Contractor employees shall park privately owned vehicles in an area designated by the Contracting Officer. This area will be within reasonable walking distance of the construction site. Contractor employee parking shall not interfere with existing and established parking requirements of the military installation.

1.3 AVAILABILITY AND USE OF UTILITY SERVICES

1.3.1 Payment for Utility Services

The Government will make all reasonably required utilities available to the Contractor from existing outlets and supplies, as specified in the contract. The Contractor shall carefully conserve any utilities furnished without charge. The Contractor’s attention is directed to Section 00800, Paragraph AVAILABILITY OF UTILITY SERVICES.

1.3.2 Sanitation

The Contractor shall provide and maintain within the construction area minimum field-type sanitary facilities approved by the Contracting Officer. Government toilet facilities will not be available to Contractor’s personnel.

1.3.3 Telephone

The Contractor shall make arrangements and pay all costs for telephone facilities desired.

1.4 BULLETIN BOARD, PROJECT SIGN, AND PROJECT SAFETY SIGN

1.4.1 Bulletin Board

Immediately upon beginning of work, the Contractor shall provide a weatherproof glass-covered bulletin board not less than 915 by 1220 mm (36 by 48 inches) in size for displaying the Equal Employment Opportunity poster, a copy of the wage decision contained in the contract, Wage Rate Information poster, and other information approved by the Contracting Officer. The bulletin board shall be located at the project site in a conspicuous place easily accessible to all employees, as approved by the Contracting Officer. Legible copies of the aforementioned data shall be displayed until work is completed. Upon completion of work the bulletin board shall be removed by and remain the property of the Contractor.

1.4.2 Project and Safety Signs

(A) General:

The Contractor shall construct and erect one project sign, one safety sign and a minimum of 1 hard hat signs at locations designated by the Contracting Officer. The signs shall conform to the requirements of the drawings attached at the end of this section. The signs shall be erected as soon as possible and within 15 days after date of commencement of work under this contract. The data required by the safety sign shall be corrected daily.

(B) Materials:

(1) Lumber shall conform to DOC PS 20 and grading rules of applicable grading agencies, WCLIB or WWPA. Grade shall be "Standard" or better Douglas Fir, S4S and shall be stamped S-Dry.

(2) Plywood: Plywood shall conform to DOC PS 1, Grade AC, Group 1, Exterior.

(3) Bolts, Nuts and Nails: Bolts and nuts shall be galvanized, and type, and size best suited for intended for use. Nails shall conform to ASTM F 547.

(4) Paint: Type of paint for primer, finish coats, lettering, and color of signs and lettering shall be as directed by the Contracting Officer. Safety signs shall be painted in the same colors as the project sign. Hard hat signs shall be painted as indicated on the attached drawing.

(5) Decals: Corps of Engineers castle decal and the hard hat decal called for on the signs will be furnished by the Government.

(C) Construction:

(1) Signs shall be constructed as detailed on attached drawings.

(2) Painting: All exposed surfaces and edges of plywood shall be given one coat of linseed oil and be wiped prior to applying primer. All exposed surfaces of signs and supports shall be given one coat of primer and one finish coat of paint colors as directed. All lettering shall be sized as indicated. Width of letter stroke shall be 1/6 of the letter height, except as noted.

(D) Maintenance and Disposal:

The Contractor shall maintain the signs in good condition throughout the life of the project. Signs shall remain the property of the Contractor and upon completion of the project they shall be removed from the site.

1.5 SCRAP MATERIAL:

Materials specified to be removed and become the property of the Contractor are designated as scrap, and the Contractor, by signing this contract, hereby acknowledges that he has made due allowance for value, if any, of such scrap in the contract price.

1.6 WRITTEN GUARANTEES AND GUARANTOR’S LOCAL REPRESENTATIVE:

Prior to completion of the contract, the Contractor shall obtain and furnish to the Contracting Officer's representative written guarantees for all the equipment and/or appliances furnished under the contract. The Contractor shall furnish with each guarantee: The name, address, and telephone number of the guarantor's representative nearest to the location where the equipment and/or appliances are installed, who, upon request of the Using Service's representative, will honor the guarantee during the guaranty period and will provide the services prescribed by the terms of the guarantee.

1.7 PRICING OF CONTRACTOR-FURNISHED PROPERTY:

At the request of the Contracting Officer, the Contractor shall promptly furnish and shall cause any subcontractors to furnish, in like manner, unit prices and descriptive data required by the Government for property record purposes of fixtures and equipment furnished and installed by the Contractor.

1.8 TEMPORARY ELECTRIC WIRING:

(A) Temporary Power and Lighting:

The Contractor shall provide construction power facilities in accordance with the safety requirements of the National Electrical Code NFPA No. 70 and the SAFETY AND HEALTH REQUIREMENTS MANUAL EM 385-1-1. The Contractor, or his delegated subcontractor, shall enforce all the safety requirements of electrical extensions for the work of all subcontractors. All work shall be accomplished by skilled electrical tradesmen in a workmanlike manner, as approved by the Contracting Officer.

(B) Construction Equipment:

In addition to the requirements of EM 385-1-1, SAFETY AND HEALTH REQUIREMENTS MANUAL, all temporary wiring conductors installed for operation of construction tools and equipment shall be either Type TW or THW contained in metal raceways, or may be multiconductor cord. Temporary wiring shall be secured above the ground or floor in a workmanlike manner and shall not present an obstacle to persons or equipment. Open wiring may only be used outside of buildings, and then only in strict accordance with the provisions of the National Electrical Code.

(C) Circuit Protection:

In addition to the present requirements in EM 385-1-1 and the National Electrical Code, all 15 and 20-ampere receptacle outlets used for obtaining power during construction shall have ground fault circuit interrupters (GFCI) for personnel protection. Block and brick saws shall also be equipped with GFCI. The Contracting Officer may allow an exception to this requirement for circuits for concrete vibrators or circuits operating at other than 60 Hertz normal (in both cases an assured grounding program as described in the National Electrical Code, except utilizing the daily inspection frequency of the grounding means of such equipment, may be permitted). The assured grounding program will not be permitted as a substitute for usage of GFCI'S except as described above. All generator-powered 15- and 20-ampere, 60 Hertz receptacle outlets shall have GFCI'S, and shall be properly grounded. A testing means shall be provided which will impose a measured fault of 5 milliamperes, plus or minus 1 milliamperes, and result in tripping the GFCI unit.

1.9 UTILITIES NOT SHOWN:

If the Contractor encounters, within the construction limits of the entire project, utilities not shown on the plans and not visible as to the date of this contract and such utilities will interfere with construction operations, he shall immediately notify the Contracting Officer in writing to enable a determination by the Contracting Officer as to the necessity for removal or relocation. If such utilities are removed or relocated as directed by the Contracting Officer, the Contractor shall be entitled to equitable adjustment for any additional pertinent work or delay.

1.10 GENERAL SAFETY REQUIREMENTS:

(A) General:

The Corps of Engineers Safety and Health Requirements Manual, EM 385-1-1, (see Contract Clauses, Section 00700, ACCIDENT PREVENTION) and the Occupational Safety and Health Act (OSHA) Standards for Construction (Title 29, Code of Federal Regulations Part 1926 as revised from time to time); General Industry Standards (Title 29, Code of Federal Regulations Part 1910 as revised from time to time); and the National Fire Protection Association Codes are applicable to this contract. In case of conflict the most stringent requirement of the standards is applicable.

(B) The Prime Contractor’s superintendent

The Prime Contractor’s superintendent shall take an active role in enforcing the safety requirements by participation in safety conferences, hazard analysis (see below), tool box meetings, walk-through inspections, correction of violations, etc., and including that of the subcontractor’s work.

(C) Job Hazard Analysis:

Based on the construction schedule, the Contractor shall submit a job hazard analysis of each major phase of work prior to entering that phase of activity. The analysis shall include major or high risk hazards, as well as commonly recurring deficiencies that might possibly be encountered for that operation, and shall identify proposed methods and techniques of accomplishing each phase in a safe manner. The Prime Contractor’s superintendent shall take active participation in the Job Hazard Analysis, including the subcontractors’ work. Prior to start of actual work a meeting shall be held with Prime Contractor, Government, and affected subcontractor to review the Job Hazard Analysis. In addition, job site meetings shall be held to indoctrinate foreman and workers on details of this analysis.

(D) Violations:

If recurring violations and/or gross violation indicate that the safety performance is unsatisfactory, corrective action shall be taken as directed, and at the discretion of the Contracting Officer the retention or some part thereof will be withheld from the progress payment until corrective action has been completed.

(E) Elevated Work Areas:

Workers in elevated work areas in excess of 6 feet above an adjoining surface require special safety attention. In addition to the provisions of EM 385-1-1, the following safety measures are required to be submitted to the Contracting Officer’s Representative. Prior to commencement of work in elevated work areas, the Contractor shall submit drawings depicting all provisions of his

positive protection system including, but not limited to, all details of guard rails.

(1) Positive protection for workmen engaged in the installation of structural steel and steel joists shall be provided by safety nets, tie-off's, hydraulic man lifts, scaffolds, or other required means. Decking crews must be tied-off or work over nets or platforms not over 6 feet below the work area. Walking on beams and/or girders and the climbing of columns is prohibited without positive protection.

(2) Perimeter guard rails shall be installed at floor, roof, or wall openings more than 6 feet above an adjoining surface and on roof perimeters. Rails shall be designed to protect all phases of elevated work including, but not limited to, roofing operations and installation of gutters and flashing. Rails around roofs may not be removed until all work on the roof is complete and all traffic on or across the roof ceases. Rails shall be designed by a licensed engineer to provide adequate stability under any anticipated impact loading. As a minimum, the rails shall consist of a top rail at a height of 42 inches, a mid rail and a toe board. Use of tie-offs, hydraulic man lifts, scaffolds, or other means of roof edge protection methods may be utilized on small structures such as family housing, prefabricated metal buildings, etc.

(F) Fire Prevention:

Twenty-four hours notice shall be given to the Contracting Officer for coordination with the Facility Fire Department prior to conducting any fire hazardous operation. Cutting or welding will be permitted only in areas that are or have been made fire safe. Where possible, all combustibles shall be located at least 35 feet horizontally from the work site. Where such location is impracticable, combustibles shall be protected with fire blankets and/or protective welding screens to prevent slag from running out of the work area. Edges of covers at the floor shall be tight to prevent sparks from going under them. This precaution is also important at overlaps where several covers are used to protect a large pile. The Contractor shall not allow any welding/cutting or open flame operations in facilities that are protected by a wet pipe fire sprinkler or an automatic detection system, if the system is out of service. First priority of work will be to return the suppression/detection system to operational condition. Return the fire detection and/or suppression system back to an operational status (if possible) during periods that the facility is unoccupied, and at the end of the work day. The Contractor shall post a fire guard for a 24 hour period (or certify to the Fire Department that the facility is safe) after welding, cutting, and open flame operations in a facility when: (a) fire detection and suppression system can not be returned to service; (b) fire detection or suppression systems do not exist. Other fire prevention precautions shall be in accordance with the latest National Fire Codes.

(G) Recordkeeping/Reporting Requirements:

On all contract operations, the Prime Contractor shall be responsible for recording and reporting all accident exposure and experience incident work. (This includes exposure and experience of the prime contractor and his/her sub-contractor(s)). As a minimum these records shall include exposure work-hours and a log of occupational injuries and illnesses. (OSHA Form 200 or state equivalent as prescribed by 29 CFR 1904.5) Reference EM 385-1-1, 02.A.02.

(H) Accident Reporting:

In addition to the requirements for reporting accidents in accordance with EM 385-1-1, Section 1, the Prime Contractor will submit at the 50% point and 100% of project completion, a written summary of worker’s compensation claims filed by workers on the project. The report will include all subcontractors. The main report covering the Prime Contractor claims will be certified as "correct and true" by the Contractor’s compensation insurance carrier. The same certification will be required for subcontractor reports.

1.11 PLANNED UTILITY OUTAGES AND STREET CLOSURES:

Power outages shall be restricted to off-duty hours and weekends. Other utilities may be connected and streets closed during normal working hours with the outage duration and street closure as short as possible. All outages and street closures shall be scheduled as far in advance as possible with the Contracting Officer and in no case less than 14 days before the outage or closure. The Contractor shall obtain in writing from the Contracting Officer a statement or schedule giving the permissible times of utility outages or road closures for particular installations and the maximum time allowed for such outage. The Contractor shall strictly observe such schedules and will be held responsible for any violations.

1.12 PROTECTION AND MAINTENANCE OF TRAFFIC

During construction the Contractor shall provide access and temporary relocated roads as necessary to maintain traffic. The Contractor shall maintain and protect traffic on all affected roads during the construction period except as otherwise specifically directed by the Contracting Officer. Measures for the protection and diversion of traffic, including the provision of watchmen and flagmen, erection of barricades, placing of lights around and in front of equipment and the work, and the erection and maintenance of adequate warning, danger, and direction signs, shall be as required by the State and local authorities having jurisdiction. The traveling public shall be protected from damage to person and property. The Contractor’s traffic on roads selected for hauling material to and from the site shall interfere as little as possible with public traffic. The Contractor shall investigate the adequacy of existing roads and the allowable load limit on these roads. The Contractor shall be responsible for the repair of any damage to roads caused by construction operations.

1.12.1 Haul Roads

The Contractor shall, at its own expense, construct access and haul roads necessary for proper prosecution of the work under this contract. Haul roads shall be constructed with suitable grades and widths; sharp curves, blind corners, and dangerous cross traffic shall be avoided. The Contractor shall provide necessary lighting, signs, barricades, and distinctive markings for the safe movement of traffic. The method of dust control, although optional, shall be adequate to ensure safe operation at all times. Location, grade, width, and alignment of construction and hauling roads shall be subject to approval by the Contracting Officer. Lighting shall be adequate to assure full and clear visibility for full width of haul road and work areas during any night work operations. Upon completion of the work, haul roads designated by the Contracting Officer shall be removed.

1.12.2 Barricades

The Contractor shall erect and maintain temporary barricades to limit public access to hazardous areas. Such barricades shall be required whenever safe public access to paved areas such as roads, parking areas or sidewalks is

prevented by construction activities or as otherwise necessary to ensure the safety of both pedestrian and vehicular traffic. Barricades shall be securely placed, clearly visible with adequate illumination to provide sufficient visual warning of the hazard during both day and night.

1.13 EXCAVATION PERMITS:

All excavation permits will be issued to the Contractor from the Base Civil Engineer (BCE) through the Contracting Officer. The appropriate form, for this request, may be obtained from the Contracting Officer. Processing time required by the BCE is 14 calendar days. Questions concerning the excavation permit should be directed to the Contracting Officer.

1.14 TIME EXTENSIONS FOR UNUSUALLY SEVERE WEATHER:

(A) This provision specifies the procedure for the determination of time extensions for unusually severe weather in accordance with the CONTRACT CLAUSE, Section 00700, entitled "DEFAULT (FIXED-PRICE CONSTRUCTION)". In order for the Contracting Officer to award a time extension under this clause, the following conditions must be satisfied:

(1) The weather experienced at the project site during the contract period must be found to be unusually severe, that is, more severe than the adverse weather anticipated for the project location during any given month.

(2) The unusually severe weather must actually cause a delay to the completion of the project. The delay must be beyond the control and without the fault or negligence of the Contractor.

(B) The following schedule of monthly anticipated adverse weather delays is based on National Oceanic and Atmospheric Administration (NOAA) or similar data for the project location and will constitute the base line for monthly weather time evaluations. The Contractor’s progress schedule must reflect these anticipated adverse weather delays in all weather dependent activities.

MONTHLY ANTICIPATED ADVERSE WEATHER DELAY
WORK DAYS BASED ON (5) DAY WORK WEEK

JAN	FEB	MAR	APR	MAY	JUN	JUL	AUG	SEP	OCT	NOV	DEC
(22)	(17)	(13)	(08)	(05)	(03)	(01)	(02)	(03)	(05)	(12)	(22)

(C) Upon acknowledgement of the Notice to Proceed (NTP) and continuing throughout the contract, the Contractor will record on the daily CQC report, the occurrence of adverse weather and resultant impact to normally scheduled work. Actual adverse weather delay days must prevent work on critical activities for 50 percent or more of the Contractor’s scheduled work day.
(ER 415-1-15, 31 OCT 89)

1.15 CONTRACTOR’S TEMPORARY FACILITIES

1.15.1 Administrative Field Offices

The Contractor shall provide and maintain administrative field office facilities within the construction area at the designated site. Government office and warehouse facilities will not be available to the Contractor’s personnel.

1.15.2 Storage Area

The Contractor shall construct a temporary 1.8 meter (6 foot) high chain link fence around trailers and materials. The fence shall include plastic strip inserts, colored brown, so that visibility through the fence is obstructed. Fence posts may be driven, in lieu of concrete bases, where soil conditions permit. Trailers, materials, or equipment shall not be placed or stored outside the fenced area unless such trailers, materials, or equipment are assigned a separate and distinct storage area by the Contracting Officer away from the vicinity of the construction site but within the military boundaries. Trailers, equipment, or materials shall not be open to public view with the exception of those items which are in support of ongoing work on any given day. Materials shall not be stockpiled outside the fence in preparation for the next day's work. At the end of each work day mobile equipment, such as tractors, wheeled lifting equipment, cranes, trucks, and like equipment, shall be parked within the fenced area.

1.15.3 Supplemental Storage Area

Upon Contractor's request, the Contracting Officer will designate another or supplemental area for the Contractor's use and storage of trailers, equipment, and materials. This area may not be in close proximity of the construction site but shall be within the military boundaries. Fencing of materials or equipment will not be required at this site; however, the Contractor shall be responsible for cleanliness and orderliness of the area used and for the security of any material or equipment stored in this area. Utilities will not be provided to this area by the Government.

1.15.4 Appearance of Trailers

Trailers utilized by the Contractor for administrative or material storage purposes shall present a clean and neat exterior appearance and shall be in a state of good repair. Trailers which, in the opinion of the Contracting Officer, require exterior painting or maintenance will not be allowed on the military property.

1.15.5 Maintenance of Storage Area

Fencing shall be kept in a state of good repair and proper alignment. Should the Contractor elect to traverse with construction equipment or other vehicles grassed or unpaved areas which are not established roadways, such areas shall be covered with a layer of gravel as necessary to prevent rutting and the tracking of mud onto paved or established roadways; gravel gradation shall be at the Contractor's discretion. Grass located within the boundaries of the construction site shall be mowed for the duration of the project. Grass and vegetation along fences, buildings, under trailers, and in areas not accessible to mowers shall be edged or trimmed neatly.

1.15.6 Security Provisions

Adequate outside security lighting shall be provided at the Contractor's temporary facilities. The Contractor shall be responsible for the security of its own equipment; in addition, the Contractor shall notify the appropriate law enforcement agency requesting periodic security checks of the temporary project field office.

1.16 HOUSEKEEPING AND CLEANUP:

Pursuant to the requirements of paragraph, CLEANING UP and paragraph, ACCIDENT PREVENTION, of the CONTRACT CLAUSES, Section 00700, the Contractor shall assign sufficient personnel to insure strict compliance. The Contractor shall submit a detailed written plan for implementation of this requirement. The plan will be presented as part of the preconstruction safety plan and will provide for keeping the total construction site, structures and accessways free of debris and obstructions at all times. Work will not be allowed in those areas that, in the opinion of the Contracting Officer's representative, have unsatisfactory cleanup and housekeeping at the end of the preceding day's normal work shift. At least once each day all areas shall be checked by the Quality Control person of the Prime Contractor and the findings recorded on the Quality Control Daily Report. In addition, the Quality Control person will take immediate action to insure compliance with this requirement. Housekeeping and cleanup shall be assigned by the Contractor to specific personnel. The name(s) of the personnel shall be available at the project site; each person will be supplied with a distinctively marked hard hat, to be worn from the beginning to the end of the project.

1.17 RESTORATION OF STORAGE AREA

Upon completion of the project and after removal of trailers, materials, and equipment from within the fenced area, the fence shall be removed and will become the property of the Contractor. Areas used by the Contractor for the storage of equipment or material, or other use, shall be restored to the original or better condition. Gravel used to traverse grassed areas shall be removed and the area restored to its original condition, including top soil and seeding as necessary.

1.18 EQUIPMENT OWNERSHIP AND OPERATING EXPENSE SCHEDULE

(A) Allowable cost for construction and marine plant and equipment in sound workable condition owned or controlled and furnished by a Contractor or subcontractor at any tier shall be based on actual cost data when the Government can determine both ownership and operating costs for each piece of equipment or equipment groups of similar serial and series from the Contractor's accounting records. When both ownership and operating costs cannot be determined from the Contractor's accounting records, equipment costs shall be based upon the applicable provisions of EP 1110-1-8, "Construction Equipment Ownership and Operating Expense Schedule", Region VII. Working conditions shall be considered to be average for determining equipment rates using the schedule unless specified otherwise by the Contracting Officer. For equipment not included in the schedule, rates for comparable pieces of equipment may be used or a rate may be developed using the formula provided in the schedule. For forward pricing, the schedule in effect at the time of negotiations shall apply. For retrospective pricing, the schedule in effect at the time the work was performed shall apply.

(B) Equipment rental costs are allowable, subject to the provisions of FAR 31.105(d)(ii) and FAR 31.205-36 substantiated by certified copies of paid invoices. Rates for equipment rented from an organization under common control, lease-purchase or sale-leaseback arrangements will be determined using the schedule except that rental costs leased from an organization under common control that has an established practice of leasing the same or similar equipment to unaffiliated leasees are allowable. Costs for major repairs or overhaul are unallowable.

(C) When actual equipment costs are proposed and the total amount of the pricing action is over $25,000, cost or pricing data shall be submitted on Standard Form 1411, "Contract Pricing Proposal Cover Sheet". By submitting cost

or pricing data, the Contractor grants to the Contracting Officer or an authorizing representative the right to examine those books, records, documents and other supporting data that will permit evaluation of the proposed equipment costs. After price agreement, the Contractor shall certify that the equipment costs or pricing data submitted are accurate, complete and current.

1.19 EQUIPMENT DATA FORM

In conjunction with paragraph, EQUIPMENT OWNERSHIP AND OPERATING EXPENSE SCHEDULE, above the Contractor shall furnish SPK Form 450 for all necessary equipment to perform work requiring adjustment of contract price and shall submit these forms with the modification proposals. A sample form is at the end of this section.

1.20 SPECIAL CONSTRUCTION RESTRAINTS/REQUIREMENTS

(A) Smoking is not allowed in the hospital and is permitted only in designated areas.

(B) Contractor should expect delays due to unexpected circumstances. These delays could include Operational Readiness inspections, Health Services inspections, fire alarm drills (2 alarms per shift per quarter, about a 30 minute delay) and unexpected Owner moves. It is anticipated that 5 days total delay will be experienced throughout the life of the construction contract. These delays shall be at no extra cost to the Government.

(C) Contractor personnel will not be allowed to use the hospital restroom facilities.

(D) Contractor will attend weekly coordination meetings with the Contracting Officer and Hospital Facility Manager.

(E) During the course of construction, other Contractors may be performing work concurrently with this contract. This work shall be closely coordinated with the Contracting Officer to avoid or minimize interference.

(F) To minimize interference of construction activity with the flow of hospital traffic, comply with the following:

(1) Keep roads, walks, and entrances to ground, to parking and to occupied areas of the building clear of construction materials, debris, and standing equipment and vehicles. Wherever excavation for new utility lines cross existing roads at least one lane must be open to traffic at all times.

(2) Method and scheduling of required cutting, altering and removal of existing roads, walks and entrances must be approved by the Contracting Officer.

(G) The Contractor’s access to the work areas in the Hospital shall be as directed by the Contracting Officer.

(H) Existing facilities shall be protected from damage throughout the course of the contract. Protection measures shall be as described herein, as indicated on drawings, and as may otherwise be required to protect the existing facilities. If the existing facilities are damaged in any way, the Contractor shall be responsible for restoring the damaged area to a like-new condition and to the satisfaction of the Contracting Officer.

(I) The Contractor shall protect existing utilities and maintain adequate storm drainage of the Contractor’s laydown area.

(J) Utilities Services: The Contractor shall provide continuity of utility services throughout the duration of construction. Provide temporary facilities, labor, materials, equipment, connections, and utilities to assure uninterrupted services throughout the hospital. These services include, but are not limited to: fire sprinkler, domestic water (cold, hot, recirculating), heating hot water, medical gases, power and lighting circuitry. Existing electrical items may be moved only after all equipment connected to them has been reconnected to the new panels. The Contractor shall provide fuel, as applicable, for the emergency generator until the new service is on line. Where necessary to cut existing services, they shall be cut and capped at suitable places where shown, or in the absence of such indication, where directed by the Contracting Officer.

(1) No utility service may be interrupted without prior approval of the Contracting Officer.

(2) The Contractor shall submit a request to interrupt any such services to the Contracting Officer, in writing, fourteen (14) days in advance of proposed interruption. The request shall state reason, date, exact time of, and approximate duration of such an interruption. Interruptions in utility services shall be of the shortest possible duration for the work at hand. Any outage shall not exceed 2 hours.

(3) The Contractor will be advised (in writing) of approval of request, or of which other date and/or time such interruption will cause least inconvenience to operations of the hospital. Interruption time approved by the hospital may occur at other than the Contractor’s normal working hours.

(K) The Contractor shall furnish and erect exterior construction fences and barricades where necessary to divert unauthorized traffic from the area to separate and protect the construction site from unauthorized entrance or activity.

(L) Work Requirements:

(1) No equipment or vehicles shall be left on the streets, outside the Contractor’s fenced area, or blocking sidewalks during off-work time.

(2) Contractor shall provide non-combustible or self-extinguishing material drop cloths to isolate areas exposed to dust, debris or noise, or to cover material storage during construction in building interiors.

(3) The Contractor shall take necessary care to ensure inclement weather does not damage Government property and shall schedule work so as to minimize its impact on progress of the work.

(4) No work will be permitted overhead of Government personnel unless barriers and guarding devices are used that meet the Contracting Officer’s approval.

(M) Existing Equipment/Property:

(1) Protective Coverings/Enclosures: Provide protective coverings and cover any Government equipment/property in the work area during construction (i.e. desks, computers, tables, chairs, carpet, etc.). At the end of each work day, the Contractor shall protect all entrances and/or exterior openings to the

work area from inclement weather. Proposed protection methods shall be submitted to the Contracting Officer for approval.

(2) Protect building wall surfaces and sidewalls from staining due to construction activities. If inadvertent soiling or marking is done, it shall be cleaned and restored (or recoated) prior to the end of the day unless otherwise approved by the Contracting Officer.

(3) Removal and Replacement Responsibility: Replace or repair all existing finished surfaces, utilities, equipment, products, vegetation, and structures or parts thereof that have been damaged, or have had to be removed, or cut into by the Contractor in order to perform work specified in this project.

(N) Grounds Protection:

(1) No parking or driving of vehicles or equipment, or storage of material will be permitted on grass or landscaped areas without the approval of the Contracting Officer.

(2) Any grass or landscaped areas damaged by the Contractor shall be
immediately repaired or replaced to their original condition as determined by the Contracting Officer. Grass areas shall be repaired with acceptable grass sod material. Broadcast seeding will not be allowed.

(O) Separation Barriers and Protective Coverings:

Separation barriers and protective coverings used in asbestos abatement shall be installed in a manner that prevents damage to existing finishes. Do not attach to painted surfaces. All damaged finishes shall be repaired with new materials matching existing colors and types at the contractors expense.

(P) Coordination of Trades

The Contractor is responsible for planning the proper installation of all equipment within the required spaces and work areas. The Contractor shall conduct an inspection of all work areas and will coordinate with his various trades to ensure that proper installation is achieved. Failure to perform proper planning which results in delays or increases the cost shall be the responsibility of the Contractor.

(Q) Use or travel of vehicle or heavy equipment on location outside the project limits shown on the drawings is prohibited.

(R) Internal Combustion Engines:

All internal combustion engines other than engines equipped with turbochargers or pollution control catalytic converters, which are operated in off-road conditions, shall be equipped with U.S. Forest Service approved spark arresters.

(S) Contractor shall consider, where appropriate, field fabrication to allow for direct interfacing with existing conditions.

(T) Work on certain major and critical items, such as the chiller, boiler, water heater, pumps. medical air compressor, and medical vacuum pump, is

sensitive to seasonal time, given day, and/or time of day. The Scheduling of work on these items shall be coordinated with the Contracting Officer.

(U) Special precaution should be taken when installing seismic bracing and restraints. Contractor should coordinate this work with existing distribution systems or equipment removal/reinstallation or relocation.

(V) Co-Habitation

(1) Installation and check-out of telephone and data components and circuitry connections will require co-habitation of Contractor and Government(possibly performed by Manufacturer) work-crews during the latter portion of the construction contract performance period.

1.21 SPECIAL PHASING REQUIREMENTS

(A) General

(1) This project is comprised of one phase.

(2) In general, the Contractor shall perform all work in or adjacent to hospital occupied areas in such a manner as to insure:

(a) The continuous and uninterrupted use of all occupied areas including the applicable mechanical and electrical systems serving these areas. The Contractor shall maintain at all times, unobstructed access to equipment for maintenance, passage through all roads and work areas for normal hospital traffic (to include wheelchair patients, supply carts, and personnel).

(b) The protection of patients and hospital personnel in occupied areas from the hazards of dust and noise associated with a construction environment.

(c) The occupied areas are kept clear, clean and free of loose debris, construction materials and partially installed work which would create a safety hazard or interfere with patients and hospital personnel duties and traffic. The Contractor shall make every effort to keep dust and noise to a minimum at all times. The Contractor will be permitted a maximum noise level equal to 65 dBA. Exceptions to the 65 dBA noise limit will be accommodated on a case-by-case basis, when they are, in the opinion of the Contracting Officer, necessary to efficiently pursue the work. Such exceptions must be coordinated and approved 72 hours in advance, and will generally be limited to lunch (11:30AM - 1:30 PM) and dinner (4:30 PM to 6:30 PM hours).

(d) All stairwells, exit routes, access to standpipes and other fire safety access ways shall be kept available for use and adequately identified throughout the construction.

(3) At the completion of the phase, the Contracting Officer and Contractor shall perform a pre-final inspection of the work of that phase and prepare a punch list. Punch list items must be corrected before final acceptance can take place.

(4) Furnishings, and non-fixed equipment within project areas that would prevent construction completion will be removed by the Government prior to Contractor’s start of work for each phase.

(5) The Contractor will have access to the ceiling on the floor below the installation of piping and demolition as needed on a room-by-room

basis. The Contractor shall determine access requirements in advance, and coordinate access with the Contracting Officer and Government personnel as specified.

(6) The Contractor shall coordinate the construction limits of the various phases with the Contracting Officer and the Hospital Facility Manager.

(7) The Contractor shall provide and install full height temporary dustproof partitions to separate and protect the occupied areas from the construction areas, as well as to minimize the transmission of dust and noise.

(a) Exact locations of the temporary dustproof partitions and signage requirements (for safe pedestrian detours) will be coordinated with the Contracting Officer.

(b) The Contractor shall construct dustproof partitions prior to the start of demolition and they must remain in place until the completion of that phase or subsequent phases where required.

(8) During each work period in "After Hours Work" areas and on "Weekends", the Contractor shall provide dust covers for all existing equipment and furniture at all times in or near the construction area. The Contractor shall leave the area broom clean and lightly vacuumed. The Contractor shall remove cover and protections at the end of each work period and shall leave the area in satisfactory condition for use by the hospital.

(9) The computer system is to remain operational at all times. Coordinate with the Contracting Officer regarding dust prevention, secure access and maintenance of cooling to spaces.

(10) Not used.

(11) Not used.

(12) All systems affected by this construction project shall be balanced, tested and certified at the completion of the entire project.

(13) The Contractor may be required to remove and reinstall existing systems to install a new system.

(B) Definitions

(1) Joint Occupancy

Those areas (within the hospital facility) designated (by the Contracting Officer)as being jointly occupied means that the Contractor will be able to complete the work necessary in the buildings, rooms while remaining occupied by hospital personnel and/or patients. The Contractor shall, in all jointly occupied areas, protect hospital personnel/patients and existing equipment from the hazards of dust, materials, tools, etc., associated with a construction environment. The Contractor shall keep these jointly occupied areas clear, clean, and free of loose debris, construction materials and partially installed work which would create a safety hazard or interfere with hospital personnel or patients. The Contractor will pay particular attention to leaving these jointly occupied areas clean at the end of each work shift.

(2) Code Blue

When a patient presents themselves to a medical treatment facility or is a resident patient and they experience a stopping of breathing or blood circulation, the responding medical personnel announce a "CODE BLUE". This announcement is normally made over a facility-wide communications system/loud speaker. It is important for medical personnel located at various locations in the hospital to respond very quickly to the CODE BLUE site. It is not uncommon for a doctor who is seeing a patient in an exam room to stop her visit, excuse herself, and run down the hallway - taking the shortest route possible - in order to respond to the emergency. The Contractor should be aware of these emergency situations and prepare for hurried and sometimes unsafe (running down hallways) activities associated with responding to the emergency.

1.22 SOIL DENSITY TEST (USING METERS CONTAINING RADIOACTIVE MATERIALS):

Nuclear methods are not acceptable for soil and soil-aggregate density tests required by this contract except as stated in DIVISION 2. Testing for official results shall be conducted as specified in DIVISION 2 of this contract. If the Contractor proposes to use meters containing radioactive materials to obtain unofficial results for his own convenience, the Contractor shall adhere to the following requirements:

(A) A USAF Radioactive Material Permit shall be obtained prior to work being performed.

(B) The Contractor shall contact the installation Radiation Protection Officer (RPO) at least 45 days prior to intended use so adequate time is provided for processing the paperwork and obtaining the USAF Radioactive Material Permit.

(C) The Contractor shall notify the RPO before bringing the radioactive material onto the installation and must notify the RPO when radioactive material is removed. The Contractor shall ensure that the RPO, installation fire department, and safety office know the locations where the material will be stored and used.

(D) The Contractor shall comply with the requirements of his/her NRC or Agreement State license and the USAF Radioactive Material Permit.

(E) The Installation RPO will periodically check the use of the radioactive material to ensure proper radiological health precautions are being followed. If the RPO discovers improper radiological procedures, the RPO will immediately notify the contract monitor to initiate corrective actions.

(F) Applications for USAF Radioactive Material Permits are submitted as follows:

(1) All applications for permits shall be submitted to host base RPO for review and approval of qualified users to work on Air Force installations.

(2) Requests will be submitted in duplicate to RPO and will include:

a. Evidence of a valid Nuclear Regulatory Commission (NRC) or Agreement State Radioactive Material License.

b. A copy of an NRC Form 241, or a similar document (such as a letter), listing the specific licensable items the Contractor wishes to use on

the base (in the case of an Agreement State licensee, the original must be forwarded by the Contractor to the appropriate NRC region).

c. Proof of a valid Air Force contract.

(3) Non-Air Force organizations which possess Agreement State licenses must forward an NRC Form 241 directly to the applicable NRC regional office as well as to the committee (Reference Title 10, Code of Federal Regulations, Part 150.20). Agreement State licenses are valid for only 180 calendar days per calendar year. If the non-Air Force organization that possesses the Agreement State license wishes to conduct operations on the Air Force installation for more than 180 days per year, it must apply for and be issued an NRC license before a permit may be issued.

(G) Renewal or termination of a USAF Radioactive Material Permit is processed as follows:

(1) Non-Air Force organizations must formally apply for either a renewal or termination of their permit upon its expiration. Permits do not automatically terminate upon reaching their expiration date but remain active pending final disposition of the radioactive material.

(2) If the original contract is renewed or continued, then an application for renewal must contain the same information as the initial request.

(3) If work under the contract has been completed, the non-Air Force organization shall submit a formal application to terminate the permit. This application shall include appropriate disposal documents and radiation survey data to confirm that the radioactive materials have been removed from the installation. (AFR 161-16)

PART 2 PRODUCTS (NOT APPLICABLE)

PART 3 EXECUTION (NOT APPLICABLE)

-- End of Section --

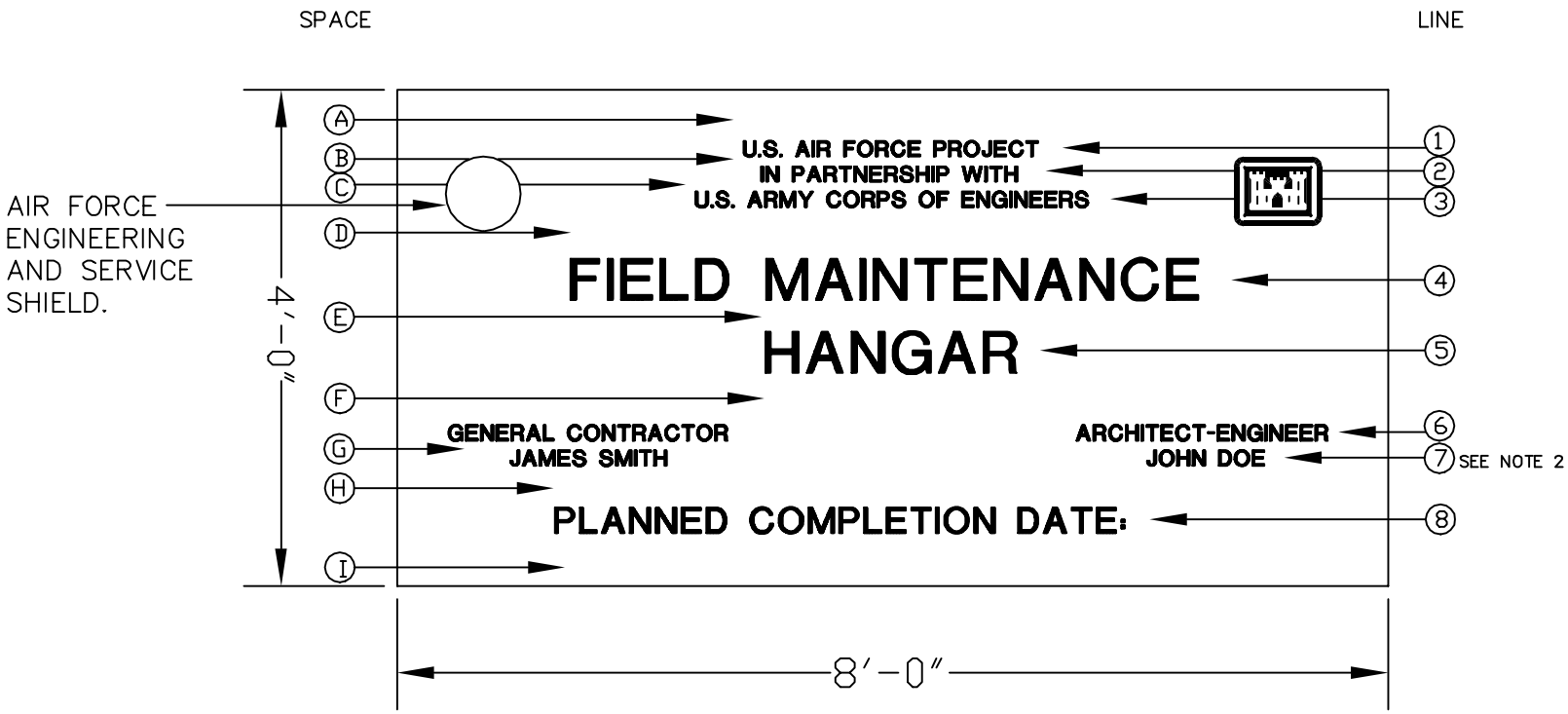

SAMPLE CONSTRUCTION SIGN

NOTES:

1. BACKGROUND AND LETTER COLORS SHELL BE AS SPECIFIED IN SECTION 01500.
2. "CORPS OF ENGINEERS" (FOR SACRAMENTO DISTRICT IN-HOUSE DESIGN PROJECTS ONLY).

SCHEDULE

SPACE	HEIGHT	LINE	DESCRIPTION	LETTER HEIGHT	STROKE
A	5"	1	U.S AIR FORCE PROJECT	1.5"	3/16"
B	1"	2	IN PARTNERSHIP WITH	1.5"	3/16"
C	1"	3	U.S. ARMY CORPS OF ENGINEERS	1.5"	3/16"
D	5"	4	PROJECT NAME	4"	1/2"
E	3"	5	PROJECT NAME (IF REQUIRED)	4"	1/2"
F	5"	6	GENERAL CONTRACTOR/A-E	1.5"	3/16"
G	1"	7	GENERAL CONTRACTOR/A-E	1.5"	3/16"
H	4"	8	PLANNED COMPLETION DATE	2.5"	1/4"
I	5"				

STANDARD DETAIL
PROJECT SIGN
U.S. AIR FORCE
U.S. ARMY ENGINEER DISTRICT
SACRAMENTO

Drawn T. Tufts — Not to Scale
Checked R. Simmons — AUGUST 1994
File. No. 150-25-1162

ACAD DRAWING: SIGN1162 DWG. 9, AUG. 94

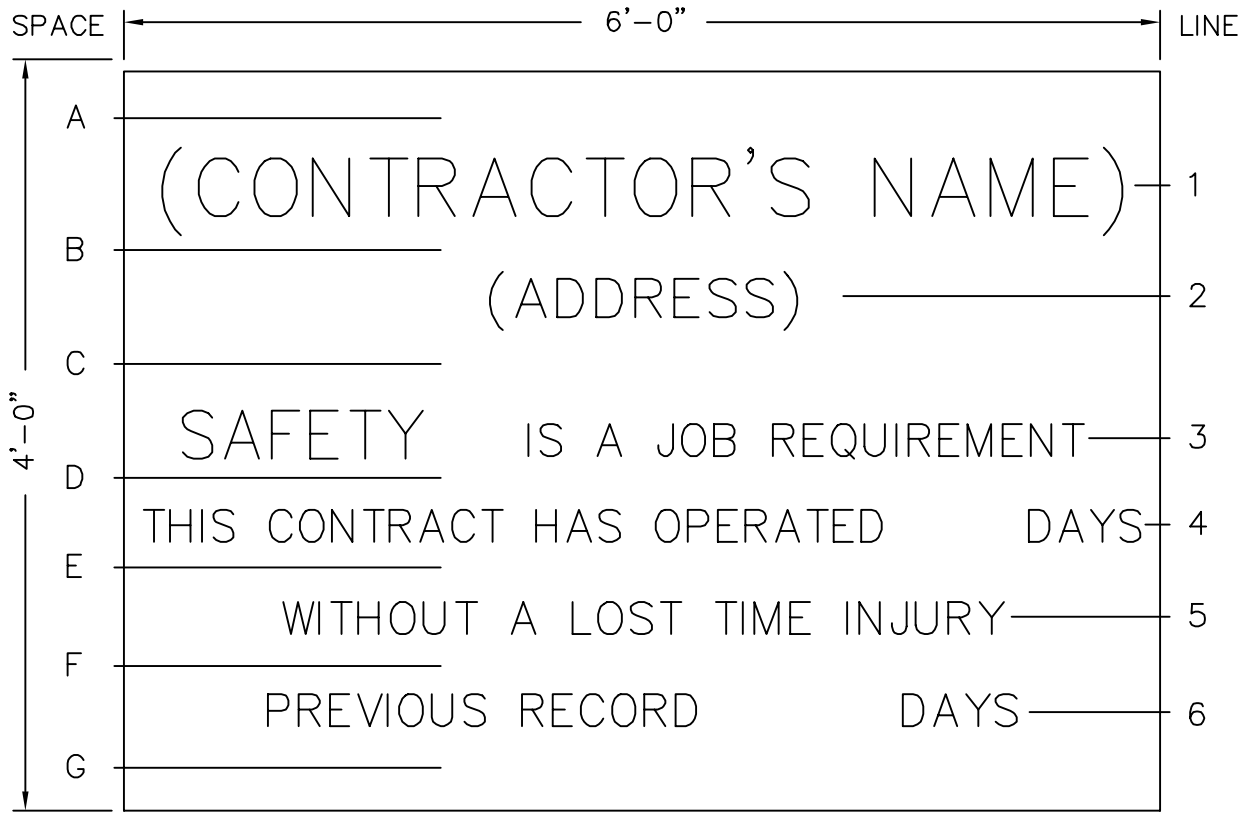

SCHEDULE

SPACE	HEIGHT	LINE	DESCRIPTION	LETTER HEIGHT
A	5"			
		1	CONTRACTOR'S NAME	5"
B	3"			
		2	ADDRESS	3"
C	6"			
		3	SAFETY IS A JOB REQUIREMENT	4 1/2" & 3"
D	3"			
		4	ALL LETTERING	3"
E	3"			
		5	ALL LETTERING	3"
F	3"			
		6	ALL LETTERING	3"
G	5"			

NOTE:

LETTERING SHALL BE BLACK No. 27038, FEDERAL STANDARD 595A.
SIGN SHALL BE INSTALLED IN THE SAME MANNER
AS THE PROJECT SIGN.

STANDARD DETAIL

SAFETY SIGN

U S ARMY ENGINEER DISTRICT
SACRAMENTO

Drawn T. Tufts Not to Scale
Checked R. Simmons AUG. 1988
File number 80-25-707

ACAD DRAWING: SIGN 707 DWG. 9, DEC. 88

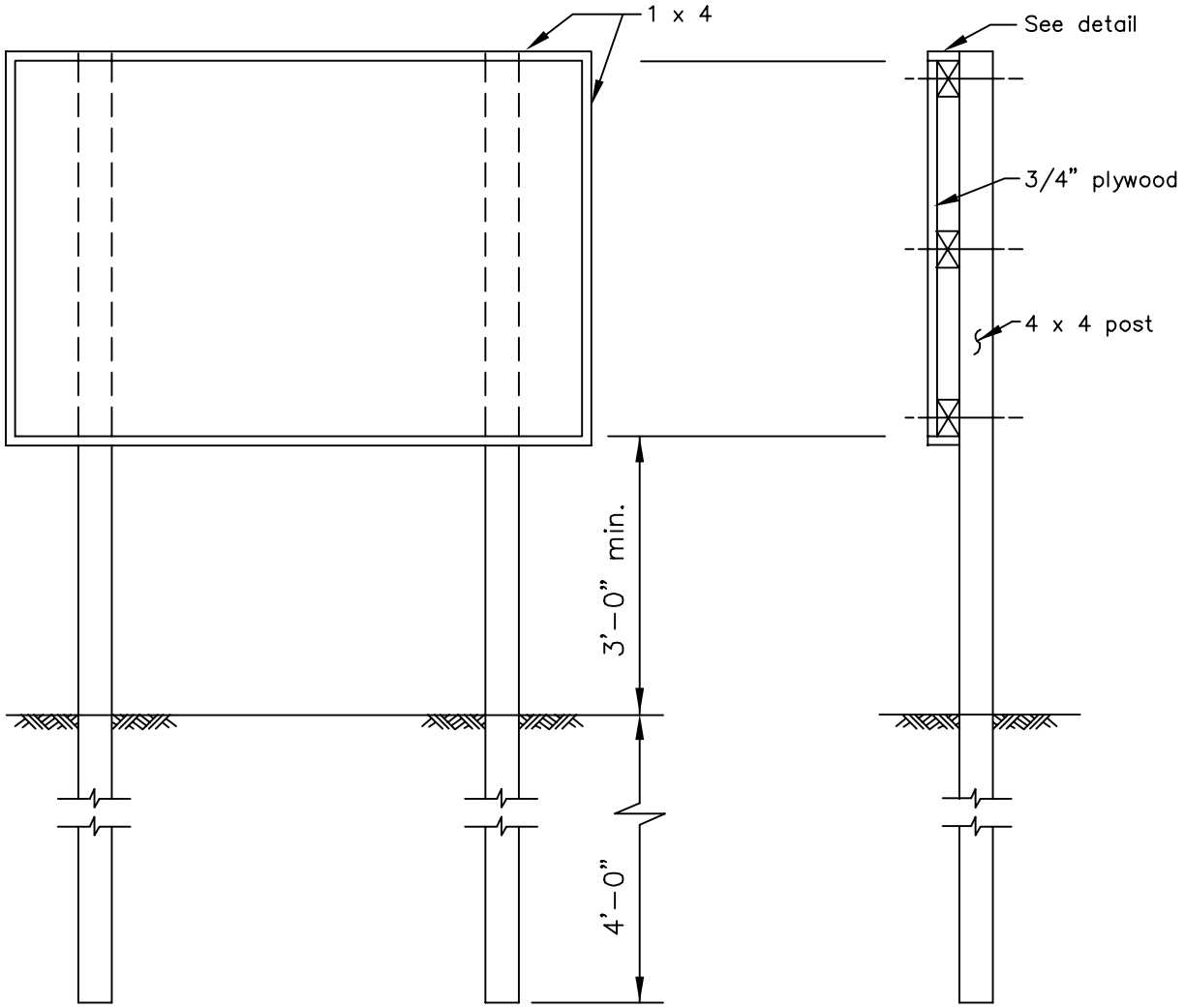

ELEVATION

SECTION

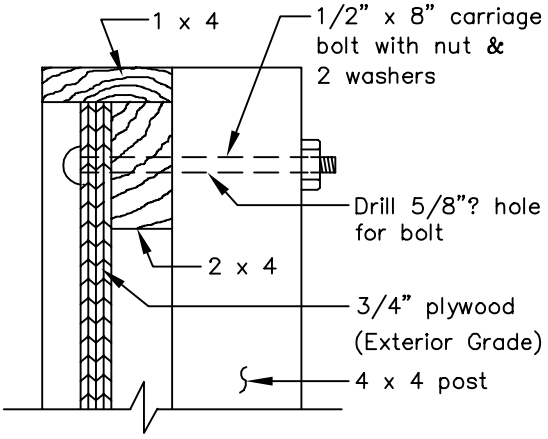

DETAIL

GENERAL NOTES:

1. Lumber to be cut & formed accurately.
2. Secure 1 x 4 and plywood with 6d finish nails at not less than 12" O.C.
3. All exposed nails to be set & holes filled with putty.
4. Sign to be set in good solid ground & backfill carefully tamped into place.
5. Where necessary posts shall be braced to provide a solid installation.
6. Paint primer (Fed. Spec. TT-P-25)
   Paint primer (Fed. Spec. TT-E-529)

STANDARD DETAIL

SIGN DETAILS

U.S. ARMY ENGINEER DISTRICT
SACRAMENTO

Drawn M.Koenig — Not to Scale
Checked R. Simmons — 1987
File No. 150-25-1232

ACAD Drawing SIGN1232.DWG 198

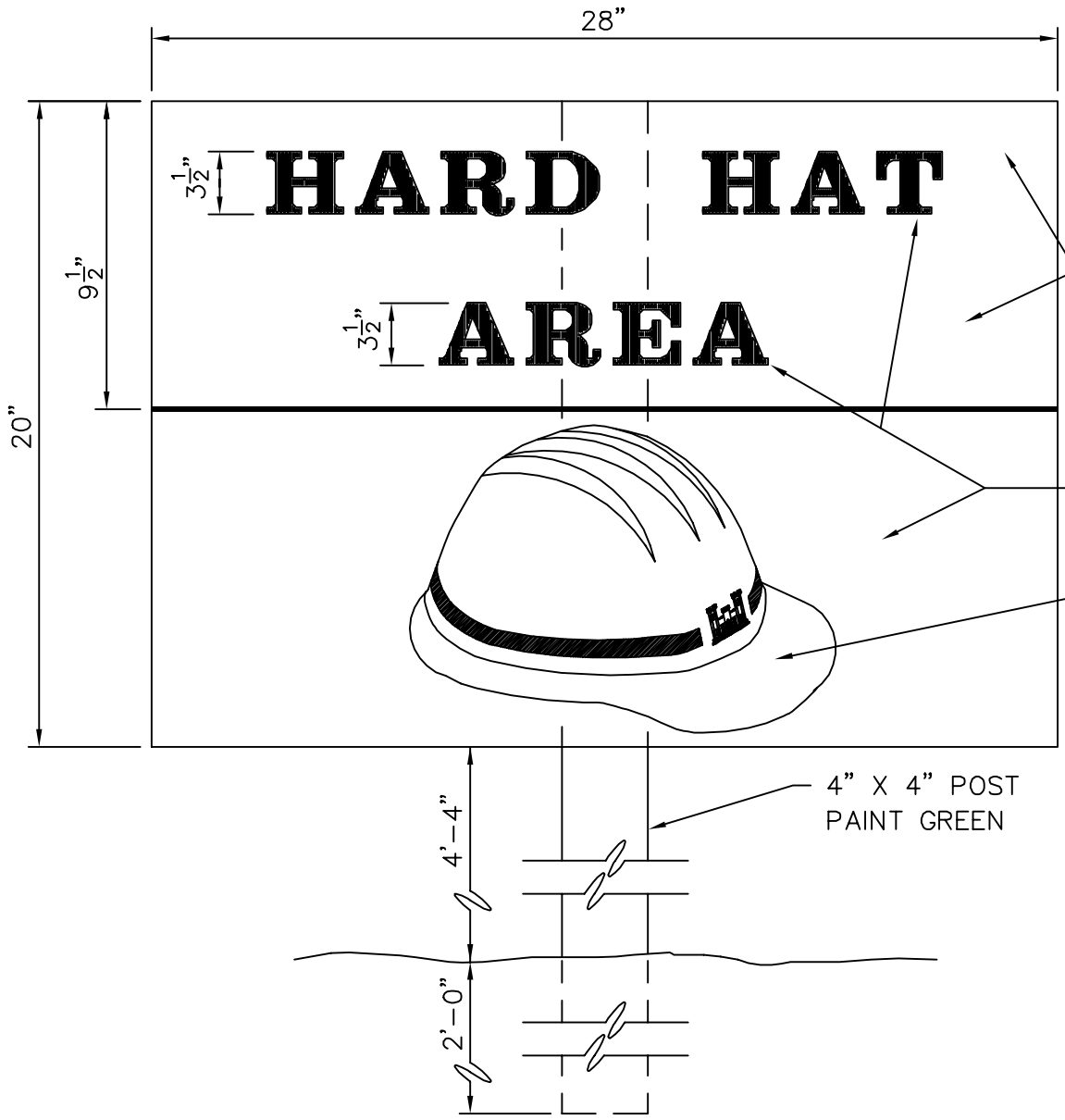

GENERAL NOTES:

1. Green & White Paint shall be opaque glossy as specified in ANSI Z535.1

2. Bolt Sign to post w/$2\frac{1}{2}$" dia. Carriage Bolts.

STANDARD DETAIL

HARD HAT SIGN

U.S. ARMY ENGINEER DISTRICT
SACRAMENTO

Drawn T. Tufts — Not to Scale
Checked R. Simmons — JAN. 1996
File No. 80-25-774

ACAD DRAWING: SIGN774 DWG. 31, JAN. 96

CONTRACTOR EQUIPMENT DATA SHEET *(Data to be furnished by Contractor for all equipment to be used on modifications as required under the special provisions of the contract.)*

DATE

CONTRACTOR

CONTRACT NUMBER

1. EQUIPMENT DESCRIPTION _____

2. MODEL AND SERIES _____

3. YEAR PURCHASED _____

4. PURCHASED PRICE AT YEAR PURCHASE _____

5. LIST PRICE YEAR OF MANUFACTURE _____

6. YEAR MANUFACTURED _____

7. EQUIPMENT HORSEPOWER _____

8. CARRIER HORSEPOWER _____

9. FUEL TYPE _____

10. SHIPPING WEIGHT _____

11. TIRE SIZE: FRONT - _____ DRIVE - _____ TRAILING - _____

REMARKS:

SECTION TABLE OF CONTENTS

DIVISION 02 - SITE WORK

SECTION 02050

DEMOLITION

09/91

PART 1 GENERAL

1.1 REFERENCES
1.2 GENERAL REQUIREMENTS
1.3 SUBMITTALS
1.4 DUST CONTROL
1.4.1 Pneumonia and Aspergillus Bacteria
1.5 PROTECTION
1.5.1 Protection of Personnel
1.5.2 Protection of Existing Property
1.5.3 Protection From the Weather
1.5.4 Protection of Trees
1.6 BURNING
1.7 USE OF EXPLOSIVES

PART 2 PRODUCTS (Not Applicable)

PART 3 EXECUTION

3.1 EXISTING STRUCTURES
3.2 UTILITIES
3.3 FILLING
3.4 DISPOSITION OF MATERIAL
3.4.1 Salvageable Items and Material
3.4.1.1 Material Salvaged for the Contractor
3.4.1.2 Items Salvaged for the Government
3.4.2 Unsalvageable Material
3.5 CLEAN UP

-- End of Section Table of Contents --

SECTION 02050

DEMOLITION
09/91

PART 1 GENERAL

1.1 REFERENCES

The publications listed below form a part of this specification to the extent referenced. The publications are referred to in the text by basic designation only.

ENGINEERING MANUALS (EM)

EM 385-1-1	(1992) U.S. Army Corps of Engineers Safety and Health Requirements Manual

1.2 GENERAL REQUIREMENTS

The work includes demolition, salvage of identified items and materials, and removal of resulting rubbish and debris. Rubbish and debris shall be removed from Government property daily, unless otherwise directed, to avoid accumulation at the demolition site. Materials that cannot be removed daily shall be stored in areas specified by the Contracting Officer. In the interest of occupational safety and health, the work shall be performed in accordance with EM 385-1-1, Section 23, Demolition, and other applicable Sections. In the interest of conservation, salvage shall be pursued to the maximum extent possible; salvaged items and materials shall be disposed of as specified.

1.3 SUBMITTALS

Government approval is required for submittals with a "GA" designation; submittals having an "FIO" designation are for information only. The following shall be submitted in accordance with Section 01300 SUBMITTAL PROCEDURES:

SD-18 Records

Work Plan; GA.

The procedures proposed for the accomplishment of the work. The procedures shall provide for safe conduct of the work, including procedures and methods to provide necessary supports, lateral bracing and shoring when required, careful removal and disposition of materials specified to be salvaged, protection of property which is to remain undisturbed, coordination with other work in progress, and timely disconnection of utility services. The procedures shall include a detailed description of the methods and equipment to be used for each operation, and the sequence of operations in accordance with EM 385-1-1.

1.4 DUST CONTROL

The amount of dust resulting from demolition shall be controlled to prevent the spread of dust to occupied portions of the construction site and to

avoid creation of a nuisance in the surrounding area. Use of water will not be permitted when it will result in, or create, hazardous or objectionable conditions such as ice, flooding and pollution.

1.4.1 Pneumonia and Aspergillus Bacteria

Preventing the spread of pneumonia and aspergillus bacteria via airborne transmission is of primary importance. Contractor shall take and observe the following preventative measures as a means to control the spread of airborne bacteria:

a. Construct barriers between patient care and construction areas to prevent dust from entering patient care areas; these barriers should be impermeable to Aspoergillus ssp.

b. Create and maintain negative pressure relative to that in adjacent patient care areas.

c. Direct pedestrian traffic from construction areas to limit opening and closing of doors that may cause dust dispersion, entry of contaminated air, or tracking of dust into patient areas.

d. Clean newly constructed areas before allowing patients to enter the areas.

e. Prevent birds from gaining access to hospital air-intake ducts.

f. Cap duct openings in construction area to prevent contamination of duct and prevent contaminant transfer through the duct to occupied areas.

g. All existing duct altered or disturbed during construction shall be vacuum cleaned.

1.5 PROTECTION

1.5.1 Protection of Personnel

During the demolition work the Contractor shall continuously evaluate the condition of the structure being demolished and take immediate action to protect all personnel working in and around the demolition site. No area, section, or component of floors, roofs, walls, columns, pilasters, or other structural element will be allowed to be left standing without sufficient bracing, shoring, or lateral support to prevent collapse or failure while workmen remove debris or perform other work in the immediate area.

Floors, roofs, walls, columns, pilasters, and other structural components that are designed and constructed to stand without lateral support or shoring, and are determined to be in stable condition, may be allowed to remain standing without additional bracing, shoring, of lateral support until demolished. The Contractor shall ensure that no elements determined to be unstable are left unsupported and shall be responsible for placing and securing bracing, shoring, or lateral supports as may be required as a result of any cutting, removal, or demolition work performed under this contract.

1.5.2 Protection of Existing Property

Before beginning any demolition work, the Contractor shall survey the site and examine the drawings and specifications to determine the extent of the work. The Contractor shall take necessary precautions to avoid damage to

existing items to remain in place, to be reused, or to remain the property of the Government; any damaged items shall be repaired or replaced as approved by the Contracting Officer. The Contractor shall coordinate the work of this section with all other work and shall construct and maintain shoring, bracing, and supports as required. The Contractor shall ensure that structural elements are not overloaded and shall be responsible for increasing structural supports or adding new supports as may be required as a result of any cutting, removal, or demolition work performed under this contract.

1.5.3 Protection From the Weather

The interior of buildings to remain and salvageable materials and equipment shall be protected from the weather at all times.

1.5.4 Protection of Trees

Trees within the project site which might be damaged during demolition and which are indicated to be left in place shall be protected by a 6 foot high fence. The fence shall be securely erected a minimum of 5 feet from the trunk of individual trees or follow the outer perimeter of branches or clumps of trees. Any tree designated to remain that is damaged during the work under this contract shall be replaced in kind or as approved by the Contracting Officer.

1.6 BURNING

The use of burning at the project site for the disposal of refuse and debris will not be permitted.

1.7 USE OF EXPLOSIVES

Use of explosives will not be permitted.

PART 2 PRODUCTS (Not Applicable)

PART 3 EXECUTION

3.1 EXISTING STRUCTURES

Existing structures indicated shall be removed completely. Interior walls shall be removed as indicated. Sidewalks, curbs, gutters and street light bases shall be removed as indicated.

3.2 UTILITIES

Existing utilities shall be removed as indicated. When utility lines are encountered that are not indicated on the drawings, the Contracting Officer shall be notified prior to further work in that area.

3.3 FILLING

Holes and other hazardous openings shall be filled in accordance with Section 02221, EXCAVATION, FILLING AND BACKFILLING FOR BUILDINGS and compacted.

3.4 DISPOSITION OF MATERIAL

Title to material and equipment to be demolished, except Government

salvage, is vested in the Contractor upon receipt of notice to proceed. The Government will not be responsible for the condition, loss or damage to such property after notice to proceed.

3.4.1 Salvageable Items and Material

Contractor shall salvage items and material to the maximum extent possible.

3.4.1.1 Material Salvaged for the Contractor

Material salvaged for the Contractor shall be stored as approved by the Contracting Officer and shall be removed from Government property before completion of the contract. Material salvaged for the Contractor shall not be sold on the site.

3.4.1.2 Items Salvaged for the Government

Salvaged items to remain the property of the Government shall be removed in a manner to prevent damage, and packed or crated to protect the items from damage while in storage or during shipment. Items damaged during removal or storage shall be repaired or replaced to match existing items. Containers shall be properly identified as to contents. Items salvaged for the Government: None.

3.4.2 Unsalvageable Material

Concrete, masonry, and other noncombustible material, except concrete permitted to remain in place, shall be disposed of in the disposal area indicated on the Drawings as directed by the Contracting Officer. Combustible material shall be disposed of off the Base.

3.5 CLEAN UP

Debris and rubbish shall be removed from excavations. Debris shall be removed and transported in a manner that prevents spillage on streets or adjacent areas. Local regulations regarding hauling and disposal shall apply.

-- End of Section --

SECTION TABLE OF CONTENTS

DIVISION 02 - SITE WORK

SECTION 02210

GRADING

12/88

PART 1 GENERAL

1.1 REFERENCES
1.2 DEFINITIONS
1.2.1 Satisfactory Materials
1.2.2 Unsatisfactory Materials
1.2.3 Cohesionless and Cohesive Materials
1.2.4 Degree of Compaction
1.2.5 Topsoil
1.3 SUBMITTALS
1.4 SUBSURFACE DATA

PART 2 PRODUCTS

2.1 BORROW MATERIAL
2.1.1 Selection
2.1.2 Borrow for Fill and Backfill

PART 3 EXECUTION

3.1 CONSERVATION OF TOPSOIL
3.2 EXCAVATION
3.2.1 Protection or Removal of Utility Lines
3.3 BACKFILL ADJACENT TO STRUCTURES
3.4 PREPARATION OF GROUND SURFACE FOR FILL
3.5 FILLS AND EMBANKMENTS
3.6 COMPACTION
3.7 FINISHED EXCAVATION, FILLS, AND EMBANKMENTS
3.8 PLACING TOPSOIL
3.9 FIELD TESTING CONTROL
3.10 PROTECTION

-- End of Section Table of Contents --

SECTION 02210

GRADING
12/88

PART 1 GENERAL

1.1 REFERENCES

The publications listed below form a part of this specification to the extent referenced. The publications are referred to in the text by basic designation only.

AMERICAN SOCIETY FOR TESTING AND MATERIALS (ASTM)

ASTM D 1556	(1990) Density and Unit Weight of Soil in Place by the Sand-Cone Method
ASTM D 1557	(1991) Laboratory Compaction Characteristics of Soil Using Modified Effort (56,000 ft-lbf/cu. ft. (2,700 kN-m/cu.m.))
ASTM D 2217	(1985) Wet Preparation of Soil Samples for Particle - Size Analysis and Determination of Soil Constants
ASTM D 2487	(1993) Classification of Soils for Engineering Purposes (Unified Soil Classification System)
ASTM D 4318	(1993) Liquid Limit, Plastic Limit, and Plasticity Index of Soils

1.2 DEFINITIONS

1.2.1 Satisfactory Materials

Materials classified in ASTM D 2487 as GW, GP, GM, GC, SW, SP, SC, SM, CL, ML and all combinations of these, and free from roots and other organic matter, trash, debris, and frozen materials and stones larger than 2 inches in any dimension are satisfactory.

1.2.2 Unsatisfactory Materials

Materials which do not comply with the requirements for satisfactory materials are unsatisfactory. Materials classified in ASTM D 2487 as PT, OL, OH, MH and CH are unsatisfactory. Unsatisfactory materials also include stripping, organic or frozen materials, trash, debris and stones larger than 2". Previously placed fills or native in-situ soils of otherwise satisfactory materials are considered unsatisfactory until compacted to the specified density.

1.2.3 Cohesionless and Cohesive Materials

Cohesive materials include materials classified as GC, SC, ML and CL.

Cohesionless materials include materials classified in ASTM D 2487 as GW, GP, SW, and SP. Materials classified as GM and SM will be identified as cohesionless when the fines have a plasticity index less than 5 and cohesive if the plasticity index is 5 or greater. The plasticity index of a material shall be determined in accordance with ASTM D 4318 using Procedure B in ASTM D 2217.

1.2.4 Degree of Compaction

Degree of compaction is a percentage of the maximum density obtained by the test procedure presented in ASTM D 1557, Method C, abbreviated below as a percent of laboratory maximum density.

1.2.5 Topsoil

Material obtained from off-site areas or excavations suitable for topsoils, is defined as natural, friable surface soil possessing the characteristics of representative soils in the vicinity that produce heavy growth of crops, grass, or other vegetation.

1.3 SUBMITTALS

Government approval is required for submittals with a "GA" designation; submittals having an "FIO" designation are for information only. The following shall be submitted in accordance with Section 01300 SUBMITTAL PROCEDURES:

SD-08 Statements

Field Testing Control; FIO.

Qualifications of the commercial testing laboratory who will be performing all testing in accordance with paragraph FIELD TESTING CONTROL.

SD-09 Reports

Field Testing Control; FIO. Satisfactory Materials; FIO.

Certified test reports and analysis certifying that the satisfactory materials proposed for use at the project site conform to the specified requirements, and for all tests conducted in accordance with paragraph FIELD TESTING CONTROL.

1.4 SUBSURFACE DATA

Subsurface soil boring logs are shown on the drawings. These data represent the best subsurface information available; however, variations may exist in the subsurface between boring locations.

PART 2 PRODUCTS

2.1 BORROW MATERIAL

Borrow material shall be selected to meet requirements and conditions of the particular fill for which it is to be used.

2.1.1 Selection

Borrow materials shall be obtained from sources outside the limits of

Government-controlled land. Borrow materials shall be subject to approval. The source of borrow material shall be the Contractor's responsibility. Unless otherwise provided in the contract, the Contractor shall obtain from the owners the right to procure material, shall pay all royalties and other charges involved, and shall bear all the expense of developing the sources, including rights-of-way for hauling.

2.1.2 Borrow for Fill and Backfill

Sieve Size	Percent Passing by Weight
2-inch	100
No. 4	30 - 90
No. 200	0 - 35

Liquid limit less than 35.
Plasticity index less than 12.

PART 3 EXECUTION

3.1 CONSERVATION OF TOPSOIL

Topsoil shall be removed to a depth of 4 inches without contamination with subsoil and stockpiled convenient to areas for later application or at locations specified. Topsoil shall be removed to full depth and shall be stored separate from other excavated materials and piled free of roots, stones, and other undesirable materials. Any surplus of topsoil from excavations and grading shall be removed from the site.

3.2 EXCAVATION

After topsoil removal has been completed, excavation of every description, regardless of material encountered, within the grading limits of the project shall be performed to the lines and grades indicated. Satisfactory excavation material shall be transported to and placed in fill areas within the limits of the work. All unsatisfactory material and surplus material shall be removed from site. In the event that it is necessary to remove unsatisfactory material to a depth greater than specified, the Contracting Officer shall be notified and an adjustment in the contract price will be considered in accordance with the contract. Excavations carried below the depths indicated, without specific directions, shall, except as otherwise specified, be refilled to the proper grade with satisfactory material as directed. All additional work of this nature shall be at the Contractor's expense. Excavation and filling shall be performed in a manner and sequence that will provide drainage at all times. Excavations shall be kept free from water while construction therein is in progress. Material required for fills in excess of that produced by excavation within the grading limits shall be obtained from borrow areas.

3.2.1 Protection or Removal of Utility Lines

Existing utility lines that are shown on the plans or the locations of which are made known to the Contractor prior to excavation and that are to be retained, if damaged, shall be repaired by the Contractor at no expense to the Government. In the event that the Contractor damages existing utility lines that are not shown on the plans or the locations of which have not been made known to the Contractor, report of such damage shall be made immediately to the Contracting Officer. If the Contracting Officer determines that the repairs shall be made by the Contractor, such repairs will be ordered under paragraph: CHANGES in CONTRACT CLAUSES of the

contract. When utility lines that are to be removed are encountered within the area of operations, the Contractor shall notify the Contracting Officer in ample time for the necessary measures to be taken to prevent interruption of the services.

3.3 BACKFILL ADJACENT TO STRUCTURES

Backfill adjacent to structures shall be placed and compacted uniformly in such manner as to prevent wedging action or eccentric loading upon or against the structures. Slopes bounding or within areas to be backfilled shall be stepped or serrated to prevent sliding of the fill. During backfilling operations and in the formation of embankments, equipment that will overload the structure in passing over and compacting these fills shall not be used. Backfill for storm drains, including the bedding and backfill for structures other than culverts and drains, shall conform to the additional requirements in other applicable sections.

3.4 PREPARATION OF GROUND SURFACE FOR FILL

All vegetation, such as roots, brush, heavy sods, heavy growth of grass, and all decayed vegetable matter, rubbish, and other unsatisfactory material within the area upon which fill is to be placed, shall be stripped or otherwise removed before the fill is started. In no case will unsatisfactory material remain in or under the fill area. Sloped ground surfaces steeper than one vertical to four horizontal on which fill is to be placed shall be plowed, stepped, or broken up, as directed, in such manner that the fill material will bond with the existing surface. Prepared surfaces on which compacted fill is to be placed shall be wetted or dried as may be required to obtain the specified moisture content and density.

3.5 FILLS AND EMBANKMENTS

Fills and embankments shall be constructed at the locations and to lines and grades indicated. The completed fill shall conform to the shape of the typical sections indicated or shall meet the requirements of the particular case. Satisfactory material obtained during excavation may be used in forming required fill. Fill shall be satisfactory material and shall be reasonably free from roots, other organic material, and trash and from stones having a maximum diameter greater than 2 inches. No frozen material will be permitted in the fill. The material shall be placed in successive horizontal layers of 8 inches in loose depth for power compacted layers, 4 inches in loose depth for hand-compacted layers, for the full width of the cross section and shall be compacted as specified. Each layer shall be compacted before the overlaying lift is placed. Moisture content of the fill or backfill material shall be adjusted by wetting or aerating, as required, to within plus or minus 2 percent of optimum moisture content as determined from laboratory tests specified in paragraph DEFINITIONS.

3.6 COMPACTION

Each layer of the fill or embankment shall be compacted to at least 95 percent of laboratory maximum density at a moisture content of plus or minus 2 percent of optimum.

3.7 FINISHED EXCAVATION, FILLS, AND EMBANKMENTS

All areas covered by the project, including excavated and filled sections and adjacent transition areas, shall be uniformly smooth-graded. The

finished surface shall be reasonably smooth, compacted, and free from irregular surface changes. The degree of finish shall be that ordinarily obtainable from blade-grader operations, except as otherwise specified. The surface of areas to be turfed shall be finished to a smoothness suitable for the application of turfing materials. The surface of embankments or excavated areas for sidewalk construction shall vary not more than 0.05 foot from the established grade and approved cross section. Other surfaces shall be finished not more than 0.10 foot above or below the established grade or approved cross section.

3.8 PLACING TOPSOIL

On areas to receive topsoil, the compacted subgrade soil shall be scarified to a 2 inch depth for bonding of topsoil with subsoil. Topsoil then shall be spread evenly to a thickness of 6 inches and graded to the elevations and slopes shown. Topsoil shall not be spread when frozen or excessively wet or dry. Topsoil shall be compacted by one pass of a cultipacker, roller or other approved equipment weighing 100 to 160 pounds per linear foot of roller. Material required for topsoil in excess of that produced by excavation within the grading limits shall be obtained from off-site areas.

3.9 FIELD TESTING CONTROL

Testing shall be the responsibility of the Contractor and shall be performed by an approved commercial laboratory meeting the requirements of ASTM D 3740. All testing shall be performed according to the Construction Control Manual except as modified herein. Field density and moisture content tests shall be performed on every 5,000 square feet of each lift placed. Field in-place density shall be determined in accordance with ASTM D 1556. Two copies of each field density and moisture content tests results shall be furnished to the Contracting Officer within 24 hours of the tests.

3.10 PROTECTION

Newly graded areas shall be protected from traffic and from erosion, and any settlement or washing away that may occur from any cause, prior to acceptance, shall be repaired and grades reestablished to the required elevations and slopes. All work shall be conducted in accordance with the environmental protection requirements of the contract.

-- End of Section --

SECTION TABLE OF CONTENTS

DIVISION 02 - SITE WORK

SECTION 02221

EXCAVATION, FILLING AND BACKFILLING FOR BUILDINGS

03/91

PART 1 GENERAL

1.1 REFERENCES
1.2 DEFINITIONS
1.2.1 Degree of Compaction
1.3 SUBMITTALS

PART 2 PRODUCTS

2.1 MATERIALS
2.1.1 Satisfactory Materials
2.1.2 Unsatisfactory Materials
2.1.3 Cohesionless and Cohesive Materials
2.2 CAPILLARY WATER BARRIER
2.2.1 SAND CUSHION
2.3 VAPOR BARRIER

PART 3 EXECUTION

3.1 CLEARING AND GRUBBING
3.2 TOPSOIL
3.3 EXCAVATION
3.3.1 Excavation at Spread Footings
3.4 DRAINAGE AND DEWATERING
3.4.1 Drainage
3.4.2 Dewatering
3.5 SHORING
3.6 CLASSIFICATION OF EXCAVATION
3.7 BLASTING
3.8 UTILITY TRENCHES
3.9 BORROW
3.10 EXCAVATED MATERIALS
3.11 FINAL GRADE OF SURFACES TO SUPPORT CONCRETE
3.12 SUBGRADE PREPARATION
3.13 FILLING AND BACKFILLING
3.13.1 Backfill at Spread Footings
3.14 TESTING
3.14.1 In-Place Densities
3.14.1.1 In-Place Density of Subgrades
3.14.1.2 In-Place Density of Fills and Backfills
3.14.2 Moisture Content
3.14.3 Optimum Moisture and Laboratory Maximum Density

3.15 CAPILLARY WATER BARRIER
3.16 GRADING
3.17 PROTECTION

-- End of Section Table of Contents --

SECTION 02221

EXCAVATION, FILLING AND BACKFILLING FOR BUILDINGS
03/91

PART 1 GENERAL

1.1 REFERENCES

The publications listed below form a part of this specification to the extent referenced. The publications are referred to in the text by basic designation only.

AMERICAN SOCIETY FOR TESTING AND MATERIALS (ASTM)

ASTM C 33	(1993) Concrete Aggregates
ASTM D 1556	(1990) Density and Unit Weight of Soil in Place by the Sand-Cone Method
ASTM D 1557	(1991) Laboratory Compaction Characteristics of Soil Using Modified Effort (56,000 ft-lbf/cu. ft. (2,700 kN-m/cu.m.))
ASTM D 2216	(1992) Laboratory Determination of Water (Moisture) Content of Soil and Rock
ASTM D 2217	(1985) Wet Preparation of Soil Samples for Particle-Size Analysis and Determination of Soil Constants
ASTM D 2487	(1993) Classification of Soils for Engineering Purposes (Unified Soil Classification System)
ASTM D 4318	(1993) Liquid Limit, Plastic Limit, and Plasticity Index of Soils

1.2 DEFINITIONS

1.2.1 Degree of Compaction

Degree of compaction required is expressed as a percentage of the maximum density obtained by the test procedure presented in ASTM D 1557, Method C, abbreviated hereinafter as percent laboratory maximum density.

1.3 SUBMITTALS

Government approval is required for submittals with a "GA" designation; submittals having an "FIO" designation are for information only. The following shall be submitted in accordance with Section 01300 SUBMITTAL PROCEDURES:

SD-09 Reports

Field Density Tests; FIO. Testing of Backfill Materials; FIO.

Copies of all laboratory and field test reports within 24 hours of the completion of the test.

PART 2 PRODUCTS

2.1 MATERIALS

2.1.1 Satisfactory Materials

Satisfactory materials include materials classified in ASTM D 2487 as GW, GP, GM, GC, SW, SP, SC, SM, CL, ML and all combinations of these and shall be free of trash, debris, roots or other organic matter, or stones larger than 2 inches in any dimension.

2.1.2 Unsatisfactory Materials

Unsatisfactory materials include materials classified in ASTM D 2487 as PT, OL, OH, MH and CH and any other materials not defined as satisfactory. Unsatisfactory materials also include stripping, organic or frozen materials, trash, debris and stones larger than 2". Previously placed fills or native in-situ soils of otherwise satisfactory materials are considered unsatisfactory until compacted to the specified density.

2.1.3 Cohesionless and Cohesive Materials

Cohesionless materials include materials classified in ASTM D 2487 as GW, GP, SW, and SP. Cohesive materials include materials classified as GC, SC, ML and CL. Materials classified as GM and SM will be identified as cohesionless when the fines have a plasticity index less than 5 and cohesive if the plasticity index is 5 or greater. The plasticity index of a material shall be determined in accordance with ASTM D 4318 using Procedure B in ASTM D 2217.

2.2 CAPILLARY WATER BARRIER

Capillary Water Barrier shall consist of clean, crushed, nonporous rock conforming to ASTM C 33 Size #67.

2.2.1 SAND CUSHION

Sand cushion shall consist of concrete fine aggregate as specified in ASTM C 33, Paragraph 5 with a salt content of less than 0.1 percent by weight and a water content of not more than 7 percent as determined by ASTM D 2216.

2.3 VAPOR BARRIER

Vapor barrier shall be polyethylene sheeting with a minimum thickness of 20 mils.

PART 3 EXECUTION

3.1 CLEARING AND GRUBBING

The areas within lines 5 feet outside of each building and structure line shall be cleared and grubbed of trees, stumps, roots, brush and other vegetation, debris, existing foundations, pavements, utility lines, structures, fences, and other items that would interfere with construction

operations. Stumps, logs, roots, and other organic matter shall be completely removed and the resulting depressions shall be filled with satisfactory material, placed and compacted in accordance with paragraph FILLING AND BACKFILLING. Non-combustionable materials removed shall be disposed of in the designated waste disposal areas. Combustionable materials removed shall be disposed of outside the limits of Government-controlled property at the Contractor's responsibility.

3.2 TOPSOIL

Topsoil stripping and placing is specified in Section 02210 GRADING.

3.3 EXCAVATION

Excavation shall conform to the dimensions and elevations indicated for each building, structure, and footing except as specified hereinafter, and shall include trenching for utility systems to a point 5 feet beyond the building line of each building and structure, and all work incidental thereto. Excavation shall extend a sufficient distance from walls and footings to allow for placing and removal of forms. Excavations below indicated depths will not be permitted except to remove unsatisfactory material. Unsatisfactory material encountered below the grades shown shall be removed as directed and replaced with satisfactory material. Payment therefor will be made in conformance with the CHANGES clause of the CONTRACT CLAUSES. Satisfactory material removed below the depths indicated without specific direction of the Contracting Officer shall be replaced at no additional cost to the Government to the indicated excavation grade with satisfactory materials, except that concrete footings shall be increased in thickness to the bottom of the overdepth excavations. Satisfactory material shall be placed and compacted as specified in paragraph FILLING AND BACKFILLING. Determination of elevations and measurements of approved overdepth excavation of unsatisfactory material below grades indicated shall be done under the direction of the Contracting Officer.

3.3.1 Excavation at Spread Footings

Excavate below each spread footing locations as indicated. Each excavated area may, at Contractor's options, incorporate more than one spread footing.

3.4 DRAINAGE AND DEWATERING

3.4.1 Drainage

Surface water shall be directed away from excavation and construction sites so as to prevent erosion and undermining of foundations. Diversion ditches, dikes and grading shall be provided and maintained as necessary during construction. Excavated slopes and backfill surfaces shall be protected to prevent erosion and sloughing. Excavation shall be performed so that the site and the area immediately surrounding the site and affecting operations at the site shall be continually and effectively drained.

3.4.2 Dewatering

Groundwater flowing toward or into excavations shall be controlled to prevent sloughing of excavation slopes and walls, boils, uplift and heave in the excavation and to eliminate interference with orderly progress of construction. French drains, sumps, ditches or trenches will not be permitted within 3 feet of the foundation of any structure, except with

specific written approval, and after specific contractual provisions for restoration of the foundation area have been made. Control measures shall be taken by the time the excavation reaches the water level in order to maintain the integrity of the in situ material. While the excavation is open, the water level shall be maintained continuously, at least 2 feet below the working level.

3.5 SHORING

Shoring, including sheet piling, shall be furnished and installed as necessary to protect workmen, banks, adjacent paving, structures, and utilities. Shoring, bracing, and sheeting shall be removed as excavations are backfilled, in a manner to prevent caving.

3.6 CLASSIFICATION OF EXCAVATION

Excavation will be unclassified regardless of the nature of material encountered.

3.7 BLASTING

Blasting will not be permitted.

3.8 UTILITY TRENCHES

Trenches for underground utilities systems shall be excavated to the required alignments and depths. The bottoms of trenches shall be graded to secure the required slope and shall be tamped if necessary to provide a firm foundation for pipe bedding material.

3.9 BORROW

Where satisfactory materials are not available in sufficient quantity from required excavations, approved materials shall be obtained as specified in Section 02210 GRADING.

3.10 EXCAVATED MATERIALS

Satisfactory excavated material required for fill or backfill shall be placed in the proper section of the permanent work required under this section or shall be separately stockpiled if it cannot be readily placed. Satisfactory material in excess of that required for the permanent work and all unsatisfactory material shall be disposed of as specified in Section 02210 GRADING.

3.11 FINAL GRADE OF SURFACES TO SUPPORT CONCRETE

Excavation to final grade shall not be made until just before concrete is to be placed. Approximately level surfaces shall be roughened, and sloped surfaces shall be cut as indicated into rough steps or benches to provide a satisfactory bond. Shales shall be protected from slaking or other erosion resulting from ponding or flow of water.

3.12 SUBGRADE PREPARATION

Unsatisfactory material in surfaces to receive fill or in excavated areas shall be removed and replaced with satisfactory materials. The surface shall be scarified to a depth of 6 inches before the fill is started. Sloped surfaces steeper than 1 vertical to 4 horizontal shall be plowed,

stepped, benched, or broken up so that the fill material will bond with the existing material. When subgrades are less than the specified density, the ground surface shall be broken up to a minimum depth of 6 inches, pulverized, and compacted to the specified density. When the subgrade is part fill and part excavation or natural ground, the excavated or natural ground portion shall be scarified to a depth of 12 inches and compacted as specified for the adjacent fill. Material shall not be placed on surfaces that are muddy, frozen, or contain frost. Compaction shall be accomplished by sheepsfoot rollers, pneumatic-tired rollers, steel-wheeled rollers, or other approved equipment well suited to the soil being compacted. Material shall be moistened or aerated as necessary to plus or minus 2 percent of optimum moisture. Minimum subgrade density shall be as specified in paragraph FILLING AND BACKFILLING.

3.13 FILLING AND BACKFILLING

Satisfactory materials shall be used in bringing fills and backfills to the lines and grades indicated and for replacing unsatisfactory materials. Satisfactory materials shall be placed in horizontal layers not exceeding 8 inches in loose thickness, or 4 inches when hand-operated compactors are used. After placing, each layer shall be plowed, disked, or otherwise broken up, moistened or aerated as necessary, thoroughly mixed and compacted as specified. Backfilling shall not begin until construction below finish grade has been approved, underground utilities systems have been inspected, tested and approved, forms removed, and the excavation cleaned of trash and debris. Backfill shall not be placed in wet or frozen areas. Where pipe is coated or wrapped for protection against corrosion, the backfill material up to an elevation 2 feet above sewer lines and 1 foot above other utility lines shall be free from stones larger than 1 inch in any dimension. Heavy equipment for spreading and compacting backfill shall not be operated closer to foundation or retaining walls than a distance equal to the height of backfill above the top of footing; the area remaining shall be compacted in layers not more than 4 inches in compacted thickness with power-driven hand tampers suitable for the material being compacted. Backfill shall be placed carefully around pipes to avoid damage to coatings or wrappings. Backfill shall not be placed against foundation walls prior to 7 days after completion of the walls. As far as practicable, backfill shall be brought up evenly on each side of the wall and sloped to drain away from the wall. Each layer of fill and backfill shall be compacted to not less than 95 percent of laboratory maximum density at a moisture content of plus or minus 2 percent of optimum.

Approved compacted subgrades that are disturbed by the Contractor's operations or adverse weather shall be scarified and compacted as specified herein before to the required density prior to further construction thereon. Recompaction over underground utilities and heating lines shall be by hand tamping.

3.13.1 Backfill at Spread Footings

Backfill excavation below each spread footing with satisfactory material. Compact each lift of backfill to not less than 95 percent of laboratory maximum density at a moisture content of plus or minus 2 percent of optimum. Each lift shall be placed in horizontal layers not exceeding 8 inches in loose thickness, or 4 inches when hand-operated compactors are used. Where excavation incorporated more than one spread footing, each lift shall include the entire area.

3.14 TESTING

Testing shall be the responsibility of the Contractor and shall be performed by an approved commercial laboratory meeting the requirements of ASTM D 3740. All testing shall be performed according to the Construction Control Manual except as modified herein. Field in-place density shall be determined in accordance with ASTM D 1556.

3.14.1 In-Place Densities

3.14.1.1 In-Place Density of Subgrades

One test per 5,000 square feet or fraction thereof.

3.14.1.2 In-Place Density of Fills and Backfills

One test per 5,000 square feet or fraction thereof of each lift for fill or backfill areas compacted by other than hand or hand-operated machines. The density for each lift of fill or backfill materials for trenches, pits, building perimeters or other structures or areas less than 10 feet in width, which are compacted with hand or hand-operated machines shall be tested as follows: One test per each area less than 1,000 square feet, or one test for each 200 linear foot of long narrow fills 400 feet or more in length.

3.14.2 Moisture Content

In the stockpile, excavation or borrow areas, a minimum of two tests per day per type of material or source of materials being placed is required during stable weather conditions. During unstable weather, tests shall be made as dictated by local conditions and approved moisture content shall be tested in accordance with ASTM D 2216.

3.14.3 Optimum Moisture and Laboratory Maximum Density

Tests shall be made for each type material or source of material including borrow material to determine the optimum moisture and laboratory maximum density values. One representative test per 3,000 cubic yards of fill and backfill, or when any change in material occurs which may affect the optimum moisture content or laboratory maximum density will be made.

3.15 CAPILLARY WATER BARRIER

Capillary water barrier under concrete floor and area-way slabs on grade shall be placed as indicated and shall be compacted with a minimum of two passes of a hand-operated plate-type vibratory compactor.

3.16 GRADING

Areas within 5 feet outside of each building and structure line shall be constructed true-to-grade, shaped to drain, and shall be maintained free of trash and debris until final inspection has been completed and the work has been accepted.

3.17 PROTECTION

Settlement or washing that occurs in graded, topsoiled, or backfilled areas prior to acceptance of the work shall be repaired and grades reestablished to the required elevations and slopes.

-- End of Section --

SECTION TABLE OF CONTENTS

DIVISION 02 - SITE WORK

SECTION 02222

EXCAVATION, TRENCHING, AND BACKFILLING FOR UTILITIES SYSTEMS

07/89

PART 1 GENERAL

1.1 REFERENCES
1.2 DEFINITIONS
1.2.1 Degree of Compaction
1.3 SUBMITTALS

PART 2 PRODUCTS

2.1 MATERIALS
2.1.1 Satisfactory Materials
2.1.2 Unsatisfactory Materials
2.1.3 Cohesionless and Cohesive Materials
2.1.4 Unyielding Material
2.1.5 Unstable Material
2.1.6 Select Granular Material
2.1.7 Sand Bedding
2.1.8 Initial Backfill Material
2.1.9 Plastic Marking Tape

PART 3 EXECUTION

3.1 EXCAVATION
3.1.1 Trench Excavation
3.1.1.1 Bottom Preparation
3.1.1.2 Removal of Unyielding Material
3.1.1.3 Removal of Unstable Material
3.1.1.4 Excavation for Appurtenances
3.1.1.5 Jacking, Boring, and Tunneling
3.1.1.6 Stockpiles
3.2 BACKFILLING AND COMPACTION
3.2.1 Replacement of Unyielding Material
3.2.2 Replacement of Unstable Material
3.2.3 Backfill, Lower Portion of Trench
3.2.4 Backfill, Remainder of Trench
3.2.5 Under Turfed or Seeded Lawn Areas and Sidewalks
3.2.6 Bedding and Initial Backfill
3.2.7 Backfill for Appurtenances
3.3 SPECIAL REQUIREMENTS
3.3.1 Gas Distribution
3.3.2 Water Lines
3.3.3 Heat Distribution System
3.3.4 Electrical Distribution System
3.3.5 Sanitary Sewers
3.3.6 Plastic Marking Tape
3.4 TESTING

3.4.1 Testing of Backfill Materials
3.4.2 Field Density Tests

-- End of Section Table of Contents --

SECTION 02222

EXCAVATION, TRENCHING, AND BACKFILLING FOR UTILITIES SYSTEMS
07/89

PART 1 GENERAL

1.1 REFERENCES

The publications listed below form a part of this specification to the extent referenced. The publications are referred to in the text by basic designation only.

AMERICAN SOCIETY FOR TESTING AND MATERIALS (ASTM)

ASTM C 33	(1993) Concrete Aggregates
ASTM D 422	(1963; R 1990) Particle-Size Analysis of Soils
ASTM D 1556	(1990) Density and Unit Weight of Soil in Place by the Sand-Cone Method
ASTM D 1557	(1991) Laboratory Compaction Characteristics of Soil Using Modified Effort (56,000 ft-lbf/cu. ft. (2,700 kN-m/cu. m.))
ASTM D 2216	(1992) Laboratory Determination of Water (Moisture) Content of Soil and Rock
ASTM D 2217	(1985) Wet Preparation of Soil Samples for Particle-Size Analysis and Determination of Soil Constants
ASTM D 2487	(1993) Classification of Soils for Engineering Purposes (Unified Soil Classification System
ASTM D 4318	(1993) Liquid Limit, Plastic Limit, and Plasticity Index of Soils

1.2 DEFINITIONS

1.2.1 Degree of Compaction

Degree of compaction shall be expressed as a percentage of the maximum density obtained by the test procedure presented in ASTM D 1557, Method C.

1.3 SUBMITTALS

Government approval is required for submittals with a "GA" designation; submittals having an "FIO" designation are for information only. The following shall be submitted in accordance with Section 01300 SUBMITTAL PROCEDURES:

SD-09 Reports

Field Density Tests; FIO. Testing of Backfill Materials; FIO.

Copies of all laboratory and field test reports within 24 hours of the completion of the test.

PART 2 PRODUCTS

2.1 MATERIALS

2.1.1 Satisfactory Materials

Satisfactory materials shall consist of any material classified by ASTM D 2487 as GW, GP, GM, GC, SW, SP, SC, SM, CL, ML and all combinations of these, free from roots and other organic matter, trash, debris, frozen materials, and stones larger than 2 inches in any dimension.

2.1.2 Unsatisfactory Materials

Unsatisfactory materials shall be materials that do not comply with the requirements for satisfactory materials. Unsatisfactory materials include but are not limited to those materials containing roots and other organic matter, trash, debris, frozen materials and stones larger than 2 inches, and materials classified in ASTM D 2487, as PT, OL, OH, MH and CH. Unsatisfactory materials also include man-made fills, refuse, or backfills from previous construction.

2.1.3 Cohesionless and Cohesive Materials

Cohesionless materials shall include materials classified in ASTM D 2487 as GW, GP, SW, and SP. Cohesive materials include materials classified as GC, SC, ML, CL, MH, and CH. Materials classified as GM and SM will be identified as cohesionless when the fines have a plasticity index less than 5 and cohesive if the plasticity index is 5 or greater. The plasticity index of a material shall be determined in accordance with ASTM D 4318 using Procedure B in ASTM D 2217.

2.1.4 Unyielding Material

Unyielding material shall consist of rock and gravelly soils with stones greater than 6 inches in any dimension or as defined by the pipe manufacturer, whichever is smaller.

2.1.5 Unstable Material

Unstable material shall consist of materials too wet to properly support the utility pipe, conduit, or appurtenant structure.

2.1.6 Select Granular Material

Select granular material shall consist of well-graded gravel, crushed gravel or crushed stone composed of hard, tough and durable particles, and shall be graded in accordance with ASTM C 33, Size Number 7. The maximum allowable aggregate size shall be 3/4 inch, or the maximum size recommended by the pipe manufacturer, whichever is smaller.

2.1.7 Sand Bedding

Sand bedding shall consist of concrete fine aggregate as specified in ASTM C 33, Paragraph 5 with a salt content of less than 0.1 percent by weight and a water content of not more than 7 percent as determined by ASTM D 2216.

2.1.8 Initial Backfill Material

Initial backfill shall consist of select granular material or sand bedding as indicated, free from rocks 1 inch or larger in any dimension or free from rocks of such size as recommended by the pipe manufacturer, whichever is smaller. When the pipe is coated or wrapped for corrosion protection, the initial backfill material shall be free of stones larger than 3/4 inch in any dimension or as recommended by the pipe manufacturer, whichever is smaller.

2.1.9 Plastic Marking Tape

Plastic marking tape shall be acid and alkali-resistant polyethylene film, 6 inches wide with minimum thickness of 0.004 inch. Tape shall have a minimum strength of 1750 psi lengthwise and 1500 psi crosswise. The tape shall be manufactured with integral wires, foil backing or other means to enable detection by a metal detector when the tape is buried up to 3 feet deep. The tape shall be of a type specifically manufactured for marking and locating underground utilities. The metallic core of the tape shall be encased in a protective jacket or provided with other means to protect it from corrosion. Tape color shall be as specified in TABLE 1 and shall bear a continuous printed inscription describing the specific utility.

TABLE 1. Tape Color

Red:	Electric
Yellow:	Gas
Orange:	Telephone and Fire Communications
Blue:	Water Systems
Green:	Sewer Systems

PART 3 EXECUTION

3.1 EXCAVATION

Excavation shall be performed to the lines and grades indicated. Earth excavation shall include removal and disposal of material not classified as rock excavation. During excavation, material satisfactory for backfilling shall be stockpiled in an orderly manner at a distance from the banks of the trench equal to 1/2 the depth of the excavation, but in no instance closer than 2 feet. Excavated material not required or not satisfactory for backfill shall be removed from the site. Grading shall be done as may be necessary to prevent surface water from flowing into the excavation, and any water accumulating therein shall be removed to maintain the stability of the bottom and sides of the excavation. Unauthorized overexcavation shall be backfilled in accordance with paragraph BACKFILLING AND COMPACTION at no additional cost to the Government.

3.1.1 Trench Excavation

The trench shall be excavated as recommended by the manufacturer of the pipe to be installed. Trench walls below the top of the pipe shall be made vertical, and of such width as recommended in the manufacturer's

installation manual. Where no manufacturer's installation manual is available, trench walls shall be made vertical. Trench walls more than 5 feet high shall be shored, cut back to a stable slope, or provided with equivalent means of protection for employees who may be exposed to moving ground or cave in. Trench walls which are cut back shall be excavated to at least the angle of repose of the soil. Special attention shall be given to slopes which may be adversely affected by weather or moisture content. The trench width below the top of pipe shall not exceed 24 inches plus pipe outside diameter (O.D.) for pipes of less than 24 inches inside diameter unless otherwise specified. Where recommended trench widths are exceeded, redesign, stronger pipe, or special installation procedures shall be utilized by the Contractor. The cost of redesign, stronger pipe, or special installation procedures shall be borne by the Contractor without any additional cost to the Government.

3.1.1.1 Bottom Preparation

The bottoms of trenches shall be accurately graded to provide uniform bearing and support for the pipe bedding material. Stones of 2 inches or greater in any dimension, or as recommended by the pipe manufacturer, whichever is smaller, shall be removed to avoid point bearing.

3.1.1.2 Removal of Unyielding Material

Where unyielding material is encountered in the bottom of the trench, such material shall be removed 6 inches below the required grade and replaced with suitable materials as provided in paragraph BACKFILLING AND COMPACTION.

3.1.1.3 Removal of Unstable Material

Where unstable material is encountered in the bottom of the trench, such material shall be removed to the depth directed and replaced to the proper grade with select granular material as provided in paragraph BACKFILLING AND COMPACTION. When removal of unstable material is required due to the fault or neglect of the Contractor in his performance of the work, the resulting material shall be excavated and replaced by the Contractor without additional cost to the Government.

3.1.1.4 Excavation for Appurtenances

Excavation for manholes, catch-basins, inlets, or similar structures shall be of sufficient size to permit the placement and removal of forms for the full length and width of structure footings and foundations as shown. Removal of unstable material shall be as specified above. When concrete or masonry is to be placed in an excavated area, special care shall be taken not to disturb the bottom of the excavation. Excavation to the final grade level shall not be made until just before the concrete or masonry is to be placed.

3.1.1.5 Jacking, Boring, and Tunneling

Unless otherwise indicated, excavation shall be by open cut except that sections of a trench may be jacked, bored, or tunneled if, in the opinion of the Contracting Officer, the pipe, cable, or duct can be safely and properly installed and backfill can be properly compacted in such sections.

3.1.1.6 Stockpiles

Stockpiles of satisfactory and wasted materials shall be placed and graded

as specified. Stockpiles shall be kept in a neat and well drained condition, giving due consideration to drainage at all times. The ground surface at stockpile locations shall be cleared, grubbed, and sealed by rubber-tired equipment, excavated satisfactory and unsatisfactory materials shall be separately stockpiled. Stockpiles of satisfactory materials shall be protected from contamination which may destroy the quality and fitness of the stockpiled material. If the Contractor fails to protect the stockpiles, and any material becomes unsatisfactory, such material shall be removed and replaced with satisfactory material from approved sources at no additional cost to the Government.

3.2 BACKFILLING AND COMPACTION

The trenches shall not be backfilled until all pressure tests are performed and until the utilities systems as installed conform to the requirements specified in the several sections covering the installation of various utilities. Where, in the opinion of the Contracting Officer, damage is likely to result from withdrawing sheeting, the sheeting shall be left in place and the contract price will be adjusted accordingly. Trenches shall be backfilled to the ground surface with satisfactory material that is suitable for the compaction as hereinafter specified. Trenches improperly backfilled shall be reopened to the depth required for proper compaction, then refilled and compacted as specified, or the condition shall be otherwise corrected as approved. The surface shall be restored to its original condition as near as practical and as hereinafter specified. Pavement and compacted subgrade disturbed by trenching operations shall be replaced in an acceptable manner with materials equal to the adjacent compacted subgrade and pavement for a minimum distance of 12 inches on each side of the trench.

3.2.1 Replacement of Unyielding Material

Unyielding material removed from the bottom of the trench shall be replaced with select granular material or initial backfill material.

3.2.2 Replacement of Unstable Material

Unstable material removed from the bottom of the trench or excavation shall be replaced with select granular material placed in layers not exceeding 6 inches loose thickness.

3.2.3 Backfill, Lower Portion of Trench

Backfill material shall be deposited in 6-inch maximum thickness layers and compacted with suitable tampers to the density of the adjacent soil or graded as hereinafter specified until there is a cover of not less than 2-feet over sewers and 1-foot over other utility lines. The backfill material in this portion of the trench for all utilities except direct buried cable and conduit shall consist of material at a moisture content that will facilitate compaction, free from stones larger than 2 inches in any dimension and hard clods larger than 6 inches in any dimension, except where pipe is coated or wrapped for protection against corrosion, the backfill material shall be free from stones larger than 1 inch in any dimension. Backfill material for direct buried cable or conduit shall consist of sand or stone free earth. Special care shall be taken not to damage the coating or wrapping of pipes.

3.2.4 Backfill, Remainder of Trench

Except for special materials for pavements, the remainder of the trench shall be backfilled with material that is free of stones larger than 2 inches or 1/2 the layered thickness, whichever is smaller, in any direction. Backfill material shall be deposited in layers not exceeding the thickness specified herein, and each layer shall be compacted to the minimum density specified as applicable to the particular area, except that in areas not subject to vehicular movement, settling of granular, noncohesive material with water will be permitted. Degree of compaction shall be as follows:

3.2.5 Under Turfed or Seeded Lawn Areas and Sidewalks

Twelve inch layers, 85 percent ASTM D 1557 maximum density for native soils and 90 percent ASTM D 1557 maximum density for borrow soils.

3.2.6 Bedding and Initial Backfill

Bedding shall be of the type and thickness shown. Initial backfill material shall be placed and compacted with approved tampers to a height of at least one foot above the utility pipe or conduit. The backfill shall be brought up evenly on both sides of the pipe for the full length of the pipe. Care shall be taken to ensure thorough compaction of the fill under the haunches of the pipe.

3.2.7 Backfill for Appurtenances

After the manhole, inlet, or similar structure has been constructed and the concrete has been allowed to cure for 7 days, backfill shall be placed in such a manner that the structure will not be damaged by the shock of falling earth. The backfill material shall be deposited and compacted as specified for final backfill, and shall be brought up evenly on all sides of the structure to prevent eccentric loading and excessive stress.

3.3 SPECIAL REQUIREMENTS

Special requirements for both excavation and backfill relating to the specific utilities are as follows:

3.3.1 Gas Distribution

Trenches shall be excavated to a depth that will provide not less than 36 inches of cover and that will avoid interferences of the gas lines and other utilities. Trenches shall be graded as specified for pipe-laying requirements in Section 02685 GAS DISTRIBUTION SYSTEM.

3.3.2 Water Lines

Trenches shall be of a depth to provide a minimum cover of 3 feet from the existing ground surface, or from the indicated finished grade, whichever is lower, to the top of the pipe and that will avoid interferences of the waterlines and other utilities. For fire protection piping, an additional 12 inches of cover is required.

3.3.3 Heat Distribution System

Initial backfill material shall be free of stones larger than 1/4 inch in any dimension.

3.3.4 Electrical Distribution System

The banks of trenches for electrical cables and duct lines need not be kept vertical but may be sloped or widened to such general limits as may be set by the Contracting Officer, provided there is no interference with other utilities. The bottom of the trenches for direct buried cable or conduit shall be smooth and free of stone and sharp objects. Where the bottom of the trench comprises material other than sand or earth, a 3-layer of sand or stone free earth shall be laid in the bottom of the trench and compacted to the approximate density of the surrounding soil. Trenches shall be a depth to provide a minimum cover over the top of the direct buried cable, conduit or duct of 24 inches from the existing ground surface or the indicated finished grade whichever is lower, and that will avoid interference of the duct, direct buried cable, or conduit with other utilities.

3.3.5 Sanitary Sewers

The width of the trench at and below the top of the pipe shall be such that the clear space between the barrel of the pipe and the trench wall shall not exceed 8 inches on either side of the pipe. The width of the trench above that level shall be as wide as necessary for sheeting and bracing and the proper performance of the work. This part of the excavation shall be done manually only a few feet in advance of the pipe laying by men skilled in this type of work.

3.3.6 Plastic Marking Tape

Warning tapes shall be installed directly above the pipe, at a depth of 18 inches below finished grade unless otherwise shown.

3.4 TESTING

Testing shall be the responsibility of the Contractor and shall be performed by an approved commercial laboratory meeting the requirements of ASTM D 3740. All testing shall be performed according to the Construction Control Manual except as modified herein.

3.4.1 Testing of Backfill Materials

Characteristics of backfill materials shall be determined in accordance with particle size analysis of soils ASTM D 422 and moisture-density relations of soils ASTM D 1557. A minimum of one particle size analysis and one moisture-density relation test shall be performed on each different type of material used for bedding and backfill.

3.4.2 Field Density Tests

Tests shall be performed in sufficient numbers to ensure that the specified density is being obtained. A minimum of one field density test per lift of backfill for every 200 feet of installation shall be performed. One moisture density relationship shall be determined for every 1500 cubic yards of material used. Field in-place density shall be determined in accordance with ASTM D 1556. Copies of field and laboratory density tests shall be furnished to the Contracting Officer. Trenches improperly compacted shall be reopened to the depth directed, then refilled and compacted to the density specified at no additional cost to the Government.

-- End of Section --

SECTION TABLE OF CONTENTS

DIVISION 02 - SITE WORK

SECTION 02285

SOIL TREATMENT FOR SUBTERRANEAN TERMITE CONTROL

09/91

PART 1 GENERAL

1.1 SUBMITTALS
1.2 QUALIFICATIONS OF PESTICIDE APPLICATORS
1.3 DELIVERY, STORAGE, AND HANDLING
1.4 SAFETY REQUIREMENTS
1.5 WARRANTY

PART 2 PRODUCTS

2.1 MATERIALS

PART 3 EXECUTION

3.1 VERIFICATION OF CONDITIONS
3.2 APPLICATION
3.2.1 Treatment of New Structures
3.2.2 Rates and Methods of Application
3.3 DISPOSAL

-- End of Section Table of Contents --

SECTION 02285

SOIL TREATMENT FOR SUBTERRANEAN TERMITE CONTROL
09/91

PART 1 GENERAL

1.1 SUBMITTALS

Government approval is required for submittals with a "GA" designation; submittals having an "FIO" designation are for information only. The following shall be submitted in accordance with Section 01300 SUBMITTAL PROCEDURES:

SD-01 Data

Qualifications; FIO.

Qualifications of the pesticide applicator.

SD-06 Instructions

Pesticides; FIO.

Manufacturer's label and Material Safety Data Sheet (MSDS) for pesticides proposed for use.

SD-14 Samples
Pesticides; FIO.

Samples of the pesticides used in this work, upon request.

1.2 QUALIFICATIONS OF PESTICIDE APPLICATORS

The pesticide applicator's principal business shall be pest control and the pesticide applicator shall be State certified in the U.S. Environmental Protection Agency (EPA) pesticide applicator category which includes structural pest control, and certified in the State.

1.3 DELIVERY, STORAGE, AND HANDLING

Pesticides shall be delivered to the project site in sealed and labeled containers in good condition as supplied by the manufacturer or formulator. Pesticides shall be stored, handled, and used in accordance with manufacturer's labels. Labels shall bear evidence of registration under the Federal Insecticide, Fungicide, and Rodenticide Act (FIFRA), as amended.

1.4 SAFETY REQUIREMENTS

The Contractor shall formulate, treat, and dispose of termiticides and their containers in accordance with label directions. Water for formulating shall only come from sites designated by the Contracting Officer, and filling hose shall be fitted with a backflow preventer meeting local plumbing codes or standards. Overflow shall be prevented during the filling operation. Pesticides and related materials shall be kept under lock and key when unattended. Proper protective clothing and equipment shall be worn and used during all phases of termiticide application.

1.5 WARRANTY

The Contractor shall provide a 5 year written warranty against infestations or reinfestations by subterranean termites of the buildings or building additions constructed under this contract. Warranty shall include annual inspections of the building addition. If live subterranean termite infestation or subterranean termite damage is discovered during the warranty period, and the soil and building conditions have not been altered in the interim, the Contractor shall:

a. Re-treat the soil and perform other treatment as may be necessary for elimination of subterranean termite infestation;

b. Repair damage caused by termite infestation; and

c. Reinspect the building approximately 180 days after the retreatment.

PART 2 PRODUCTS

2.1 MATERIALS

Termiticides shall be currently registered by the EPA.

PART 3 EXECUTION

3.1 VERIFICATION OF CONDITIONS

At the time of application, the soil moisture content shall be sufficiently low to allow uniform distribution of the treatment solution throughout the soil. Applications shall not be made during or immediately following heavy rains or when conditions may cause runoff and create an environmental hazard.

3.2 APPLICATION

3.2.1 Treatment of New Structures

The Contractor shall establish complete and unbroken vertical and/or horizontal (as necessary) soil poison barriers between the soil and all portions of the intended structure which may allow termite access to wood and wood related products. Application shall not be made to areas intended for use as a plenum air space. Termiticide shall be applied as a coarse spray and provide uniform distribution unto the soil surface. Treatment shall be applied prior to placement of a vapor barrier and at least 12 hours prior to concrete placement. Where treated soil or fill material is not to be covered with a vapor barrier, adequate precautions shall be taken to prevent its disturbance. Soil or fill material disturbed after treatment shall be re-treated as specified above before placement of slabs or other covering structures. Treatment of the soil on the exterior sides of foundation walls, grade beams, and similar structures shall be coordinated with final grading and planting operations so as to avoid disturbance of the treated barriers. Manufacturer's warnings and precautions shall be observed in the handling and use of such materials. Care shall be taken to prevent these chemicals from entering water supply systems, potable water supplies, or aquifers; and that they do not endanger plants or animals. The Contracting Officer shall be notified at least 48 hours prior to beginning of treatment and formulating, mixing, and

application shall be performed in the presence of the Contracting Officer's representative.

3.2.2 Rates and Methods of Application

Rates and methods of application shall be in accordance with the manufacturer's instructions on the pesticide label. Maximum application or dosage rates shall be used. If the pesticide contains less than the amount of active ingredient specified on the label, work shall be repeated with pesticides conforming to this specification.

3.3 DISPOSAL

The Contractor shall dispose of residual pesticides and containers off Government property in accordance with label instructions and EPA criteria.

-- End of Section --

SECTION TABLE OF CONTENTS

DIVISION 02 - SITE WORK

SECTION 02511

CONCRETE SIDEWALKS

01/89

PART 1 GENERAL

1.1 REFERENCES
1.2 SUBMITTALS
1.3 WEATHER LIMITATIONS
1.3.1 Placing During Cold Weather
1.3.2 Placing During Warm Weather
1.4 PLANT, EQUIPMENT, MACHINES, AND TOOLS
1.4.1 General Requirements

PART 2 PRODUCTS

2.1 CONCRETE
2.1.1 Air Content
2.1.2 Slump
2.2 CONCRETE CURING MATERIALS
2.2.1 Impervious Sheet Materials
2.2.2 Burlap
2.2.3 White Pigmented Membrane-Forming Curing Compound
2.3 JOINT FILLER STRIPS
2.3.1 Expansion Joint Filler, Premolded
2.4 FORM WORK
2.4.1 Sidewalk Forms

PART 3 EXECUTION

3.1 SUBGRADE PREPARATION
3.1.1 Sidewalk Subgrade
3.1.2 Maintenance of Subgrade
3.2 FORM SETTING
3.2.1 Sidewalks
3.3 SIDEWALK CONCRETE PLACEMENT AND FINISHING
3.3.1 Concrete Finishing
3.3.2 Edge and Joint Finishing
3.3.3 Surface and Thickness Tolerances
3.4 SIDEWALK JOINTS
3.4.1 Contraction Joints
3.4.2 Expansion Joints
3.5 CURING AND PROTECTION
3.5.1 General Requirements
3.5.1.1 Mat Method
3.5.1.2 Impervious Sheeting Method
3.5.1.3 Membrane Curing Method
3.5.2 Backfilling
3.5.3 Protection
3.6 FIELD QUALITY CONTROL

3.6.1 General Requirements
3.6.2 Concrete Testing
3.6.2.1 Strength Testing
3.6.2.2 Air Content
3.6.2.3 Slump Test
3.6.3 Thickness Evaluation
3.6.4 Surface Evaluation
3.7 SURFACE DEFICIENCIES AND CORRECTIONS
3.7.1 Thickness Deficiency
3.7.2 Grade or Surface Smoothness Deficiency
3.7.3 Appearance

-- End of Section Table of Contents --

SECTION 02511

CONCRETE SIDEWALKS
01/89

PART 1 GENERAL

1.1 REFERENCES

The publications listed below form a part of this specification to the extent referenced. The publications are referred to in the text by basic designation only.

AMERICAN SOCIETY FOR TESTING AND MATERIALS (ASTM)

ASTM C 31	(1991) Making and Curing Concrete Test Specimens in the Field
ASTM C 143	(1990a) Slump of Hydraulic Cement Concrete
ASTM C 171	(1991) Sheet Materials for Curing Concrete
ASTM C 172	(1990) Sampling Freshly Mixed Concrete
ASTM C 173	(1978) Air Content of Freshly Mixed Concrete by the Volumetric Method
ASTM C 231	(1991b) Air Content of Freshly Mixed Concrete by the Pressure Method
ASTM C 309	(1991) Liquid Membrane-Forming Compounds for Curing Concrete
ASTM D 1751	(1983; R 1991) Preformed Expansion Joint Filler for Concrete Paving and Structural Construction (Nonextruding and Resilient Bituminous Types)
ASTM D 1752	(1984; R 1992) Preformed Sponge Rubber and Cork Expansion Joint Fillers for Concrete Paving and Structural Construction

FEDERAL SPECIFICATIONS (FS)

FS CCC-C-467	(Rev C) Cloth, Burlap, Jute (or Kenaf)

1.2 SUBMITTALS

Government approval is required for submittals with a "GA" designation; submittals having an "FIO" designation are for information only. The following shall be submitted in accordance with Section 01300 SUBMITTAL PROCEDURES:

SD-09 Reports

Field Quality Control; FIO.

Copies of all test reports within 24 hours of completion of the test.

SD-18 Records
Concrete; FIO.

Copies of certified delivery tickets for all concrete used in the construction.

1.3 WEATHER LIMITATIONS

1.3.1 Placing During Cold Weather

Concrete placement shall be discontinued when the air temperature reaches 40 degrees F and is falling. Placement may begin when the air temperature reaches 35 degrees F and is rising. Provisions shall be made to protect the concrete from freezing during the specified curing period. If necessary to place concrete when the temperature of the air, aggregates, or water is below 35 degrees F, placement shall be approved in writing. Approval shall be contingent upon full conformance with the following provisions. The underlying material shall be prepared and protected so that it is entirely free of frost when the concrete is deposited. Aggregates shall be heated as necessary to result in the temperature of the in-place concrete being between 50 and 85 degrees F. Methods and equipment for heating shall be approved. The aggregates shall be free of ice, snow, and frozen lumps before entering the mixer. Covering and other means shall be provided for maintaining the concrete at a temperature of at least 50 degrees F for not less than 72 hours after placing, and at a temperature above freezing for the remainder of the curing period.

1.3.2 Placing During Warm Weather

The temperature of the concrete as placed shall not exceed 85 degrees F except where an approved retarder is used. The mixing water and/or aggregates shall be cooled, if necessary, to maintain a satisfactory placing temperature. In no case shall the placing temperature exceed 95 degrees F.

1.4 PLANT, EQUIPMENT, MACHINES, AND TOOLS

1.4.1 General Requirements

Plant, equipment, machines, and tools used in the work shall be subject to approval and shall be maintained in a satisfactory working condition at all times. The equipment shall have the capability of producing the required product, meeting grade controls, thickness control and smoothness requirements as specified. Use of the equipment shall be discontinued if it produces unsatisfactory results. The Contracting Officer shall have access at all times to the plant and equipment to ensure proper operation and compliance with specifications.

PART 2 PRODUCTS

2.1 CONCRETE

Concrete shall conform to the applicable requirements of Section 03300 CAST-IN-PLACE STRUCTURAL CONCRETE except as otherwise specified. Concrete shall have a minimum compressive strength of 3000 psi at 28 days. Maximum size of aggregate shall be 1 inch.

2.1.1 Air Content

Mixtures shall have air content by volume of concrete of 5 to 7 percent, based on measurements made immediately after discharge from the mixer.

2.1.2 Slump

The concrete slump shall be 2 inches, plus or minus 1 inch, where determined in accordance with ASTM C 143.

2.2 CONCRETE CURING MATERIALS

2.2.1 Impervious Sheet Materials

Impervious sheet materials shall conform to ASTM C 171, type optional, except that polyethylene film, if used, shall be white opaque.

2.2.2 Burlap

Burlap shall conform to FS CCC-C-467.

2.2.3 White Pigmented Membrane-Forming Curing Compound

White pigmented membrane-forming curing compound shall conform to ASTM C 309, Type 2.

2.3 JOINT FILLER STRIPS

2.3.1 Expansion Joint Filler, Premolded

Expansion joint filler, premolded, shall conform to ASTM D 1751 or ASTM D 1752, 3/8 inch thick, unless otherwise indicated.

2.4 FORM WORK

Form work shall be designed and constructed to insure that the finished concrete will conform accurately to the indicated dimensions, lines, and elevations, and within the tolerances specified. Forms shall be of wood or steel, straight, of sufficient strength to resist springing during depositing and consolidating concrete. Wood forms shall be surfaced plank, 2-inch nominal thickness, straight and free from warp, twist, loose knots, splits or other defects. Wood forms shall have a nominal length of 10 feet. Radius bends may be formed with 3/4-inch boards, laminated to the required thickness. Steel forms shall be channel-formed sections with a flat top surface and with welded braces at each end and at not less than two intermediate points. Ends of steel forms shall be interlocking and self-aligning. Steel forms shall include flexible forms for radius forming, corner forms, form spreaders, and fillers. Steel forms shall have a nominal length of 10 feet with a minimum of two welded stake pockets per form. Stake pins shall be solid steel rods with chamfered heads and pointed tips designed for use with steel forms.

2.4.1 Sidewalk Forms

Sidewalk forms shall be of a height equal to the full depth of the finished sidewalk.

PART 3 EXECUTION

3.1 SUBGRADE PREPARATION

The subgrade shall be constructed to the specified grade and cross section prior to concrete placement. Subgrade shall be placed and compacted to conform with applicable requirements of Section 02210 GRADING.

3.1.1 Sidewalk Subgrade

The subgrade shall be tested for grade and cross section with a template extending the full width of the sidewalk and supported between side forms.

3.1.2 Maintenance of Subgrade

The subgrade shall be maintained in a smooth, compacted condition in conformity with the required section and established grade until the concrete is placed. The subgrade shall be in a moist condition when concrete is placed. The subgrade shall be prepared and protected so as to produce a subgrade free from frost when the concrete is deposited.

3.2 FORM SETTING

Forms shall be carefully set to the indicated alignment, grade and dimensions. Forms shall be held rigidly in place by a minimum of three stakes per form placed at intervals not to exceed 4 feet. Corners, deep sections, and radius bends shall have additional stakes and braces, as required. Clamps, spreaders, and braces shall be used where required to insure rigidity in the forms. Forms shall be removed without injuring the concrete. Bars or heavy tools shall not be used against the concrete in removing the forms. Any concrete found defective after form removal shall be promptly and satisfactorily repaired. Forms shall be cleaned and coated with form oil each time before concrete is placed. Wood forms may, instead, be thoroughly wetted with water before concrete is placed, except that with probable freezing temperatures, oiling is mandatory.

3.2.1 Sidewalks

Forms for sidewalks shall be set with the upper edge true to line and grade with an allowable tolerance of 1/8 inch in any 10-foot long section. After forms are set, grade and alignment shall be checked with a 10-foot straightedge. Forms shall have a transverse slope as indicated. Side forms shall not be removed for 12 hours after finishing has been completed.

3.3 SIDEWALK CONCRETE PLACEMENT AND FINISHING

Concrete shall be placed in the forms in one layer of such thickness that when consolidated and finished the sidewalks will be of the thickness indicated. After concrete has been placed in the forms, a strike-off guided by side forms shall be used to bring the surface to proper section to be compacted. The concrete shall be consolidated with an approved vibrator, and the surface shall be finished to grade with a wood float, bull float, or darby, edged and broom finished.

3.3.1 Concrete Finishing

After straightedging, when most of the water sheen has disappeared, and just before the concrete hardens, the surface shall be finished to a smooth and uniformly fine granular or sandy texture free of waves, irregularities, or tool marks. A scored surface shall be produced by brooming with a

fiber-bristle brush in a direction transverse to that of the traffic.

3.3.2 Edge and Joint Finishing

All slab edges, including those at formed joints, shall be finished carefully with an edger having a radius of 1/8 inch. Transverse joint shall be edged before brooming, and the brooming shall eliminate the flat surface left by the surface face of the edger. Corners and edges which have crumbled and areas which lack sufficient mortar for proper finishing shall be cleaned and filled solidly with a properly proportioned mortar mixture and then finished.

3.3.3 Surface and Thickness Tolerances

Finished surfaces shall not vary more than 5/16 inch from the testing edge of a 10-foot straightedge. Permissible deficiency in section thickness will be up to 1/4 inch.

3.4 SIDEWALK JOINTS

Sidewalk joints shall be constructed to divide the surface into rectangular areas. Unless otherwise indicated, transverse contraction joints shall be spaced at a distance equal to the sidewalk width or 5 feet on centers, whichever is less, and shall be continuous across the slab. Unless otherwise indicated, longitudinal contraction joints shall be constructed along the centerline of all sidewalks 10 feet or more in width. Transverse expansion joints shall be installed at sidewalk returns and opposite expansion joints in adjoining curbs. Where the sidewalk is not in contact with the curb, transverse expansion joints shall be installed as indicated. Expansion joints shall be formed about structures and features which project through or into the sidewalk pavement, using joint filler of the type, thickness, and width indicated.

3.4.1 Contraction Joints

The contraction joints shall be formed in the fresh concrete by cutting a groove in the top portion of the slab to a depth of at least one-fourth of the sidewalk slab thickness, using a jointer to cut the groove, or by sawing a groove in the hardened concrete with a power-driven saw, unless otherwise approved. Sawed joints shall be constructed by sawing a groove in the concrete with a 1/8-inch blade to the depth indicated. An ample supply of saw blades shall be available on the job before concrete placement is started, and at least one standby sawing unit in good working order shall be available at the jobsite at all times during the sawing operations.

3.4.2 Expansion Joints

Expansion joints shall be formed with joint filler strips. Joint filler shall be placed with top edge 1/4 inch below the surface and shall be held in place with steel pins or other devices to prevent warping of the filler during floating and finishing. Immediately after finishing operations are completed, joint edges shall be rounded with an edging tool having a radius of 1/8 inch, and concrete over the joint filler shall be removed.

3.5 CURING AND PROTECTION

3.5.1 General Requirements

Concrete shall be protected against loss of moisture and rapid temperature changes for at least 7 days from the beginning of the curing operation. Unhardened concrete shall be protected from rain and flowing water. All equipment needed for adequate curing and protection of the concrete shall be on hand and ready for use before actual concrete placement begins. Protection shall be provided as necessary to prevent cracking of the pavement due to temperature changes during the curing period.

3.5.1.1 Mat Method

The entire exposed surface shall be covered with two or more layers of burlap. Mats shall overlap each other at least 6 inches. The mat shall be thoroughly wetted with water prior to placing on concrete surface and shall be kept continuously in a saturated condition and in intimate contact with concrete for not less than 7 days.

3.5.1.2 Impervious Sheeting Method

The entire exposed surface shall be wetted with a fine spray of water and then covered with impervious sheeting material. Sheets shall be laid directly on the concrete surface with the light-colored side up and overlapped 12 inches when a continuous sheet is not used. The curing medium shall not be less than 18-inches wider than the concrete surface to be cured, and shall be securely weighted down by heavy wood planks, or a bank of moist earth placed along edges and laps in the sheets. Sheets shall be satisfactorily repaired or replaced if torn or otherwise damaged during curing. The curing medium shall remain on the concrete surface to be cured for not less than 7 days.

3.5.1.3 Membrane Curing Method

A uniform coating of white-pigmented membrane-curing compound shall be applied to the entire exposed surface of the concrete as soon after finishing as the free water has disappeared from the finished surface. Formed surfaces shall be coated immediately after the forms are removed and in no case longer than 1 hour after the removal of forms. Concrete shall not be allowed to dry before the application of the membrane. If any drying has occurred, the surface of the concrete shall be moistened with a fine spray of water and the curing compound applied as soon as the free water disappears. Curing compound shall be applied in two coats by hand-operated pressure sprayers at a coverage of approximately 200 square feet per gallon for both coats. The second coat shall be applied in a direction approximately at right angles to the direction of application of the first coat. The compound shall form a uniform, continuous, coherent film that will not check, crack, or peel and shall be free from pinholes or other imperfections. If pinholes, abrasion, or other discontinuities exist, an additional coat shall be applied to the affected areas within 30 minutes. Concrete surfaces that are subjected to heavy rainfall within 3 hours after the curing compound has been applied shall be resprayed by the method and at the coverage specified above. Areas where the curing compound is damaged by subsequent construction operations within the curing period shall be resprayed. Necessary precautions shall be taken to insure that the concrete is properly cured at sawed joints, and that no curing compound enters the joints. The top of the joint opening and the joint groove at exposed edges shall be tightly sealed before the concrete in the region of the joint is resprayed with curing compound. The method used for sealing the joint groove shall prevent loss of moisture from the joint during the entire specified curing period. Approved standby facilities for curing concrete pavement shall be provided at a location accessible to the

jobsite for use in the event of mechanical failure of the spraying equipment or other conditions that might prevent correct application of the membrane-curing compound at the proper time. Concrete surfaces to which membrane-curing compounds have been applied shall be adequately protected during the entire curing period from pedestrian and vehicular traffic, except as required for joint-sawing operations and surface tests, and from any other possible damage to the continuity of the membrane.

3.5.2 Backfilling

After curing, debris shall be removed and the area adjoining the concrete shall be backfilled, graded, and compacted to conform to the surrounding area in accordance with lines and grades indicated.

3.5.3 Protection

Completed concrete shall be protected from damage until accepted. The Contractor shall repair damaged concrete and clean concrete discolored during construction. Concrete that is damaged shall be removed and reconstructed for the entire length between regularly scheduled joints. Refinishing the damaged portion will not be acceptable. Removed damaged portions shall be disposed of as directed.

3.6 FIELD QUALITY CONTROL

3.6.1 General Requirements

The Contractor shall perform the inspection and tests described and meet the specified requirements for inspection details and frequency of testing. Based upon the results of these inspections and tests, the Contractor shall take the action and submit reports as required below, and any additional tests to insure that the requirements of these specifications are met.

3.6.2 Concrete Testing

3.6.2.1 Strength Testing

The Contractor shall provide molded concrete specimens for strength tests. Samples of concrete placed each day shall be taken not less than once a day nor less than once for every 250 cubic yards of concrete. The samples for strength tests shall be taken in accordance with ASTM C 172. Cylinders for acceptance shall be molded in conformance with ASTM C 31 by an approved testing laboratory. Each strength test result shall be the average of two test cylinders from the same concrete sample tested at 28 days, unless otherwise specified or approved. Concrete specified on the basis of compressive strength will be considered satisfactory if the averages of all sets of three consecutive strength test results equal or exceed the specified strength, and no individual strength test result falls below the specified strength by more than 500 psi.

3.6.2.2 Air Content

Air content shall be determined in accordance with ASTM C 173 or ASTM C 231. ASTM C 231 shall be used with concretes and mortars made with relatively dense natural aggregates. Two tests for air content shall be made on randomly selected batches of each class of concrete placed during each shift. Additional tests shall be made when excessive variation in concrete workability is reported by the placing foreman or the Government inspector.

If results are out of tolerance, the placing foreman shall be notified and he shall take appropriate action to have the air content corrected at the plant. Additional tests for air content will be performed on each truckload of material until such time as the air content is within the tolerance specified.

3.6.2.3 Slump Test

Two slump tests shall be made on randomly selected batches of each class of concrete for every 250 cubic yards, or fraction thereof, of concrete placed during each shift. Additional tests will be performed when excessive variation in the workability of the concrete is noted.

3.6.3 Thickness Evaluation

The anticipated thickness of the concrete shall be determined prior to placement by passing a template through the formed section.

3.6.4 Surface Evaluation

The finished surface of each category of the completed work shall be uniform in color and free of blemishes and form or tool marks.

3.7 SURFACE DEFICIENCIES AND CORRECTIONS

3.7.1 Thickness Deficiency

When measurements indicate that the completed concrete section is deficient in thickness by more than 1/4 inch the deficient section will be removed, between regularly scheduled joints, and replaced.

3.7.2 Grade or Surface Smoothness Deficiency

All sidewalks requiring grade or surface smoothness corrections shall be removed and replaced.

3.7.3 Appearance

Exposed surfaces of the finished work will be inspected by the Government and any deficiencies in appearance will be identified. Areas which exhibit excessive cracking, discoloration, form marks, or tool marks or which are otherwise inconsistent with the overall appearances of the work shall be removed and replaced.

-- End of Section --

SECTION TABLE OF CONTENTS

DIVISION 02 - SITE WORK

SECTION 02660

WATER LINES

06/92

PART 1 GENERAL

1.1 REFERENCES
1.2 PIPING
1.2.1 Service Lines
1.2.2 Distribution Lines
1.2.3 Sprinkler Supply Lines
1.2.4 Plastic Pipe
1.2.5 Excavation, Trenching, and Backfilling
1.3 SUBMITTALS
1.4 HANDLING
1.4.1 Polyethylene (PE) Pipe
1.4.2 Miscellaneous Plastic Pipe and Fittings

PART 2 PRODUCTS

2.1 PIPE
2.1.1 Plastic Pipe
2.1.1.1 Polyethylene Plastic (PE)
2.1.1.2 Polyvinyl Chloride (PVC) Plastic Pipe
2.1.2 Reinforced Plastic Mortar Pressure (RPMP) Pipe
2.1.3 Reinforced Thermosetting Resin Pipe (RTRP)
2.1.3.1 RTRP-I
2.1.3.2 RTRP-II
2.1.4 Polyvinyl Chloride (PVC) Pipe
2.1.5 RTRP and RPMP Pipe
2.2 JOINTS
2.2.1 Plastic Pipe
2.2.1.1 Polyethylene (PE) Pipe
2.2.1.2 Polyvinyl Chloride Pipe
2.2.2 RPMP Pipe
2.2.3 RTRP
2.2.3.1 RTRP-I, Grade I and 2
2.2.3.2 RTRP-II, Grade 1 and 2
2.2.4 Gate Valves
2.2.5 Indicator Post for Valves
2.3 VALVE BOXES
2.4 MISCELLANEOUS ITEMS
2.4.1 Tapping Sleeves
2.4.2 Service Boxes
2.4.3 Disinfection

PART 3 EXECUTION

3.1 INSTALLATION
3.1.1 Cutting of Pipe

3.1.2 Adjacent Facilities
3.1.2.1 Sewer Lines
3.1.2.2 Water Lines
3.1.3 Joint Deflection
3.1.3.1 Flexible Plastic Pipe
3.1.4 Placing and Laying
3.1.4.1 Plastic Pipe Installation
3.1.4.2 PE, RTRP, and/or RPMP Manufacturer's Representative
3.1.4.3 Connections
3.1.4.4 Penetrations
3.1.5 Jointing
3.1.5.1 Polyethylene (PE) Pipe
3.1.5.2 Polyvinyl Chloride (PVC) Plastic Pipe
3.1.5.3 RTRP I, RTRP II and RPMP Pipe
3.1.5.4 Connections
3.1.6 Service Lines
3.1.6.1 Service Lines
3.1.6.2 Service Lines for Sprinkler Supplies
3.1.7 Field Encasement of Fittings
3.2 Setting of Valves and Valve Boxes
3.2.1 Valves
3.2.2 Thrust Restraint
3.2.3 Thrust Blocks
3.3 HYDROSTATIC TESTS
3.3.1 Pressure Test
3.3.2 Leakage Test
3.3.3 Time for Making Test
3.3.4 Concurrent Hydrostatic Tests
3.4 DISINFECTION
3.4.1 Bacteriological Disinfection
3.4.2 Lead Residual
3.5 CLEANUP

-- End of Section Table of Contents --

SECTION 02660

WATER LINES
06/92

PART 1 GENERAL

1.1 REFERENCES

The publications listed below form a part of this specification to the extent referenced. The publications are referred to in the text by basic designation only.

AMERICAN SOCIETY FOR TESTING AND MATERIALS (ASTM)

ASTM D 1599	(1988) Short-Time Hydraulic Failure Pressure of Plastic Pipe, Tubing, and Fittings
ASTM D 1784	(1992) Rigid Poly(Vinyl Chloride) (PVC) Compounds and Chlorinated Poly(Vinyl Chloride) (CPVC) Compounds
ASTM D 1785	(1993) Poly(Vinyl Chloride) (PVC) Plastic Pipe, Schedules 40, 80, and 120
ASTM D 2241	(1993) Poly(Vinyl Chloride) (PVC) Pressure-Rated Pipe (SDR Series)
ASTM D 2464	(1993) Threaded Poly(Vinyl Chloride) (PVC) Plastic Pipe Fittings, Schedule 80
ASTM D 2466	(1993) Poly(Vinyl Chloride) (PVC) Plastic Pipe Fittings, Schedule 40
ASTM D 2467	(1993) Socket-Type Poly(Vinyl Chloride) (PVC) Plastic Pipe Fittings, Schedule 80
ASTM D 2564	(1993) Solvent Cements for Poly(Vinyl Chloride) (PVC) Plastic Piping Systems
ASTM D 2657	(1990) Heat-Joining Polyolefin Pipe and Fittings
ASTM D 2774	(1972; R 1983) Underground Installation of Thermoplastic Pressure Piping
ASTM D 2855	(1993) Making Solvent-Cemented Joints with Poly(Vinyl Chloride) (PVC) Pipe and Fittings
ASTM D 2996	(1988) Filament-Wound "Fiberglass" (Glass-Fiber-Reinforced Thermosetting-Resin) Pipe
ASTM D 2997	(1990) Centrifugally Cast "Fiberglass"

	(Glass-Fiber-Reinforced-Thermosetting-Resin) Pipe
ASTM D 3839	(1989) Underground Installation of "Fiberglass" (Glass-Fiber-Reinforced Thermosetting Resin) Pipe
ASTM F 477	(1993) Elastomeric Seals (Gaskets) for Joining Plastic Pipe

AMERICAN SOCIETY OF MECHANICAL ENGINEERS (ASME)

ASME B1.20.1	(1983; R 1992) Pipe Threads, General Purpose (Inch)

AMERICAN WATER WORKS ASSOCIATION (AWWA)

AWWA B300	(1992) Hypochlorites
AWWA B301	(1992) Liquid Chlorine
AWWA C104	(1990) Cement-Mortar Lining for Ductile-Iron Pipe and Fittings for Water
AWWA C105	(1988) Polyethylene Encasement for Ductile-Iron Piping for Water and Other Liquids
AWWA C110	(1993) Ductile-Iron and Gray-Iron Fittings, 3 In. Through 48 In., for Water and Other Liquids
AWWA C111	(1990) Rubber-Gasket Joints for Ductile-Iron Pressure Pipe and Fittings
AWWA C153	(1988) Ductile-Iron Compact Fittings, 3 In. Through 16 In., for Water and Other Liquids
AWWA C500	(1986) Gate Valves for Water and Sewerage Systems
AWWA C509	(1987) Resilient-Seated Gate Valves for Water and Sewerage Systems
AWWA C651	(1992) Disinfecting Water Mains
AWWA C900	(1989; C900a) Polyvinyl Chloride (PVC) Pressure Pipe, 4 In. Through 12 In., for Water Distribution
AWWA C901	(1988; Errata) Polyethylene (PE) Pressure Pipe and Tubing, 1/2 In. Through 3 In., for Water Service
AWWA C950	(1988) Fiberglass Pressure Pipe
AWWA M23	(1980) Manual: PVC Pipe - Design and Installation

ASBESTOS CEMENT PIPE PRODUCERS ASSOCIATION (ACPPA)

ACPPA-01	(1988) Recommended Work Practices for A/C Pipe

MANUFACTURERS STANDARDIZATION SOCIETY OF THE VALVE AND FITTINGS INDUSTRY (MSS)

MSS SP-80	(1987) Bronze Gate, Globe, Angle and Check Valves

NATIONAL FIRE PROTECTION ASSOCIATION (NFPA)

NFPA 24	(1995) Installation of Private Fire Service Mains and Their Appurtenances
NFPA 49	(1994) Hazardous Chemicals Data
NFPA 325M	(1994) Fire Hazard Properties of Flammable Liquids, Gases, and Volatile Solids
NFPA 704	(1990) Identification of the Fire Hazards of Materials

NSF INTERNATIONAL (NSF)

NSF Std 14	(1965; Rev Nov 1990) Plastics Piping System Components and Related Materials

1.2 PIPING

This section covers water distribution and service lines, and connections to building service at a point approximately 5 feet outside buildings and structures to which service is required. The Contractor shall have a copy of the manufacturer's recommendations for each material or procedure to be utilized available at the construction site at all times.

1.2.1 Service Lines

Piping for water service lines less than 3 inches in diameter shall be polyvinyl chloride (PVC) plastic or polyethylene unless otherwise shown or specified. Piping for water service lines for sizes 3 inches and larger shall be polyvinyl chloride (PVC) plastic filament-wound or centrifugally cast reinforced thermosetting resin or reinforced plastic mortar pressure pipe, unless otherwise shown or specified.

1.2.2 Distribution Lines

Piping for water distribution lines shall be polyvinyl chloride (PVC) plastic filament-wound or centrifugally cast reinforced thermosetting resin or reinforced plastic mortar pressure pipe unless otherwise shown or specified.

1.2.3 Sprinkler Supply Lines

Piping for water lines supplying sprinkler systems for building fire protection shall conform to NFPA 24 from the point of connection with the water distribution system to the building 5 foot line.

1.2.4 Plastic Pipe

All plastic piping system components (PVC, polyethylene, thermosetting resin and reinforced plastic mortar pressure) intended for transportation of potable water shall comply with NSF Std 14 and shall be legibly marked with their symbol.

1.2.5 Excavation, Trenching, and Backfilling

Excavation, trenching, and backfilling shall be in accordance with the applicable provisions of Section 02222 EXCAVATION, TRENCHING, AND BACKFILLING FOR UTILITIES SYSTEMS, except as modified herein.

1.3 SUBMITTALS

Government approval is required for submittals with a "GA" designation; submittals having an "FIO" designation are for information only. The following shall be submitted in accordance with Section 01300 SUBMITTAL PROCEDURES:

SD-06 Instructions

Installation; FIO.

The manufacturer's recommendations for each material or procedure to be utilized.

SD-08 Statements

Waste Water Disposal Method; FIO.

The method proposed for disposal of waste water from hydrostatic tests and disinfection, prior to performing hydrostatic tests.

Statement of Satisfactory Installation; FIO.

A statement signed by the principal officer of the contracting firm stating that the installation is satisfactory and in accordance with the contract plans and specifications and the manufacturer's prescribed procedures and techniques, upon completion of the project and before final acceptance.

SD-09 Reports

Bacterial Examination; FIO.

Test results from commercial laboratory verifying disinfection.

SD-13 Certificates

PE, RTRP, and/or RPMP Manufacturer's Representative; FIO.

The name and qualifications of the manufacturer's representative and written certification from the manufacturer that the representative is technically qualified.

Contractor's Installation; FIO.

A statement signed by the PE, RTRP, and/or RPMP manufacturer's field

representative certifying that the Contractor's personnel are capable of properly installing the pipe on the project.

1.4 HANDLING

Pipe and accessories shall be handled so as to insure delivery to the trench in sound, undamaged condition. Particular care shall be taken not to injure the pipe coating or lining. If the coating or lining of any pipe or fitting is damaged, the repair shall be made by the Contractor at his expense in a satisfactory manner. No other pipe or material of any kind shall be placed inside a pipe or fitting after the coating has been applied. Pipe shall be carried into position and not dragged. Use of pinch bars and tongs for aligning or turning pipe will be permitted only on the bare ends of the pipe. The interior of pipe and accessories shall be thoroughly cleaned of foreign matter before being lowered into the trench and shall be kept clean during laying operations by plugging or other approved method. Before installation, the pipe shall be inspected for defects. Material found to be defective before or after laying shall be replaced with sound material without additional expense to the Government. Rubber gaskets that are not to be installed immediately shall be stored in a cool and dark place.

1.4.1 Polyethylene (PE) Pipe

PE pipe, fittings, and accessories shall be handled in conformance with AWWA C901.

1.4.2 Miscellaneous Plastic Pipe and Fittings

Polyvinyl Chloride (PVC), Reinforced Thermosetting Resin Pipe (RTRP), and Reinforced Plastic Mortar Pressure (RPMP) pipe and fittings shall be handled and stored in accordance with the manufacturer's recommendations. Storage facilities shall be classified and marked in accordance with NFPA 704, with classification as indicated in NFPA 49 and NFPA 325M.

PART 2 PRODUCTS

2.1 PIPE

Pipe shall conform to the respective specifications and other requirements specified below.

2.1.1 Plastic Pipe

2.1.1.1 Polyethylene Plastic (PE)

Pipe, tubing, and heat-fusion fittings shall conform to AWWA C901.

2.1.1.2 Polyvinyl Chloride (PVC) Plastic Pipe

Pipe, couplings and fittings shall be manufactured of material conforming to ASTM D 1784, Class 12454B.

a. Pipe Less Than 4 inch Diameter:

(1) Screw-Joint: Pipe shall conform to dimensional requirements of ASTM D 1785 Schedule 80, with joints meeting requirements of 150 psi working pressure, 200 psi hydrostatic test pressure, unless otherwise shown or specified. Pipe couplings when used,

shall be tested as required by ASTM D 2464.

(2) Elastomeric-Gasket Joint: Pipe shall conform to dimensional requirements of ASTM D 1785. Schedule 40 with joints meeting the requirements of 150 psi working pressure, 200 psi hydrostatic test pressure, unless otherwise shown or specified, or it may be pipe conforming to requirements of ASTM D 2241, elastomeric joint, with the following applications:

SDR	Maximum Working Pressure psi	Minimum Hydrostatic Pressure psi
17	150	200

In addition to the above requirements, the pipe, couplings and fittings shall be hydrostatically tested as required by AWWA C900, and shall conform to iron pipe (I.P.S.) or cast iron outside diameter (CIOD) size dimensions.

(3) Solvent Cement Joint: Pipe shall conform to dimensional requirements of ASTM D 1785 or ASTM D 2241 with joints meeting the requirements of 150 psi working pressure and 200 psi hydrostatic test pressure.

b. Pipe 4 Inch and Larger: Pipe, couplings and fittings shall conform to AWWA C900, Class 150, CIOD pipe dimensions, elastomeric-gasket joint, unless otherwise shown or specified.

2.1.2 Reinforced Plastic Mortar Pressure (RPMP) Pipe

AWWA C950.

2.1.3 Reinforced Thermosetting Resin Pipe (RTRP)

Pipe shall have a quick-burst strength greater than or equal to four times the normal working pressure of the pipe. The quick-burst strength test shall conform to the requirements of ASTM D 1599.

2.1.3.1 RTRP-I

RTRP-I shall conform to ASTM D 2996, except pipe shall have an outside diameter equal to cast iron outside diameter or standard weight steel pipe. The pipe shall be suitable for a normal working pressure of 150 psi at 73 degrees F. The inner surface of the pipe shall have a smooth uniform continuous resin-rich surface liner conforming to ASTM D 2996.

2.1.3.2 RTRP-II

RTRP-II shall conform to ASTM D 2997. Pipe shall have an outside diameter equal to standard weight steel pipe.

2.1.4 Polyvinyl Chloride (PVC) Pipe

a. For pipe less than 4 inch diameter, fittings for threaded pipe shall conform to requirements of ASTM D 2464, threaded to conform to the requirements of ASME B1.20.1 for use with Schedule 80 pipe and fittings, fittings for solvent cement jointing shall conform

to ASTM D 2466 or ASTM D 2467, and fittings for elastomeric-gasket joint pipe shall be iron conforming to AWWA C110 or AWWA C111. Iron fittings and specials shall be cement-mortar lined (standard thickness) in accordance with AWWA C104.

b. For pipe 4 inch diameter and larger, fittings and specials shall be iron, bell end in accordance with AWWA C110, 150 psi pressure rating unless otherwise shown or specified, except that profile of bell may have special dimensions as required by the pipe manufacturer; or may be fittings and specials of the same material as the pipe with elastomeric gaskets, all in conformance with AWWA C900. Iron fittings and specials shall be cement-mortar lined (standard thickness) in accordance with AWWA C104. Fittings shall be bell and spigot or plain end pipe, or as applicable. Ductile iron compact fittings shall be in accordance with AWWA C153.

2.1.5 RTRP and RPMP Pipe

Fittings and specials shall be compatible with the pipe supplied. Filament wound or molded fittings up to 6 inches shall conform to AWWA C950. Iron fittings shall be cement-mortar lined in accordance with AWWA C104 and shall conform to AWWA C110 and AWWA C111. Fittings shall be suitable for working and testing pressures specified for the pipe.

2.2 JOINTS

2.2.1 Plastic Pipe

2.2.1.1 Polyethylene (PE) Pipe

Joints for pipe fittings and couplings shall be strong tight joints as specified for PE in Paragraph INSTALLATION. Joints connecting pipe of differing material shall be made in accordance with the manufacturer's recommendation as approved by the Contracting Officer.

2.2.1.2 Polyvinyl Chloride Pipe

Joints, fittings, and couplings shall be as specified for PVC pipe. Joints connecting pipe of differing materials shall be made in accordance with the manufacturer's recommendations as approved by the Contracting Officer.

2.2.2 RPMP Pipe

Joints shall be mechanical or bell and spigot type with elastomeric gasket.

2.2.3 RTRP

2.2.3.1 RTRP-I, Grade I and 2

Joints shall be bell and spigot with elastomeric gasket, mechanical coupling with elastomeric gasket, threaded and bonded coupling, or tapered bell and spigot with compatible adhesive. All RTRP-I materials shall be products of a single manufacturer.

2.2.3.2 RTRP-II, Grade 1 and 2

Joints shall be the bell and spigot type with elastomeric gasket, bell and spigot with adhesive, butt-jointed with adhesive bonded reinforced overlay, mechanical, flanged, threaded or commercially available proprietary joints,

provided they are capable of conveying water at the pressure and temperature of the pipe.

2.2.4 Gate Valves

Gate valves shall be designed for a working pressure of not less than 150 psi. Valve connections shall be as required for the piping in which they are installed. Valves shall have a clear waterway equal to the full nominal diameter of the valve, and shall be opened by turning counterclockwise. The operating nut or wheel shall have an arrow, cast in the metal, indicating the direction of opening.

a. Valves smaller than 3 inches shall be all bronze and shall conform to MSS SP-80, Type 1, Class 150.

b. Valves 3 inches and larger shall be iron body, bronze mounted, and shall conform to AWWA C500. Flanges shall not be buried. An approved pit shall be provided for all flanged connections.

c. Resilient-Seated Gate Valves: Resilient-seated gate valves shall conform to AWWA C509.

2.2.5 Indicator Post for Valves

Each valve shown on the drawings with the designation "P.I.V." shall be equipped with indicator post conforming to the requirements of NFPA 24. Operation shall be by a wrench which will be attached to each post.

2.3 VALVE BOXES

Valve boxes shall be cast iron or concrete, except that concrete boxes may be installed only in locations not subjected to vehicular traffic. Cast-iron boxes shall be extension type with slide-type adjustment and with flared base. The minimum thickness of metal shall be 3/16 inch. Concrete boxes shall be the standard product of a manufacturer of precast concrete equipment. The word "WATER" shall be cast in the cover. The box length shall adapt, without full extension, to the depth of cover required over the pipe at the valve location.

2.4 MISCELLANEOUS ITEMS

2.4.1 Tapping Sleeves

Tapping sleeves of the sizes indicated for connection to existing main shall be the cast gray, ductile, or malleable-iron, split-sleeve type with flanged or grooved outlet, and with bolts, follower rings and gaskets on each end of the sleeve. Construction shall be suitable for a maximum working pressure of 150 psi. Bolts shall have square heads and hexagonal nuts. Longitudinal gaskets and mechanical joints with gaskets shall be as recommended by the manufacturer of the sleeve. When using grooved mechanical tee, it shall consist of an upper housing with full locating collar for rigid positioning which engages a machine-cut hole in pipe, encasing an elastomeric gasket which conforms to the pipe outside diameter around the hole and a lower housing with positioning lugs, secured together during assembly by nuts and bolts as specified, pretorqued to 50 foot-pound.

2.4.2 Service Boxes

Service boxes shall be cast iron or concrete and shall be extension service

boxes of the length required for the depth of the line, with either screw or slide-type adjustment. The boxes shall have housings of sufficient size to completely cover the service valve and shall be complete with identifying covers.

2.4.3 Disinfection

Chlorinating materials shall conform to the following:

Chlorine, Liquid: AWWA B301.

Hypochlorite, Calcium and Sodium: AWWA B300.

PART 3 EXECUTION

3.1 INSTALLATION

3.1.1 Cutting of Pipe

Cutting of pipe shall be done in a neat and workmanlike manner without damage to the pipe. Unless otherwise recommended by the manufacturer and authorized by the Contracting Officer, cutting shall be done with an approved type mechanical cutter. Wheel cutter shall be used when practicable.

3.1.2 Adjacent Facilities

3.1.2.1 Sewer Lines

Where the location of the water pipe is not clearly defined in dimensions on the drawings, the water pipe shall not be laid closer horizontally than 10 feet from a sewer except where the bottom of the water pipe will be at least 12 inches above the top of the sewer pipe, in which case the water pipe shall not be laid closer horizontally than 6 feet from the sewer. Where water lines cross under gravity-flow sewer lines, the sewer pipe for a distance of at least 10 feet each side of the crossing shall be fully encased in concrete or shall be made of pressure pipe with no joint located within 3 feet horizontally of the crossing. Joints in the sewer main, closer horizontally than 3 feet to the crossing, shall be encased in concrete.

3.1.2.2 Water Lines

Water lines shall not be laid in the same trench with sewer lines, gas lines, fuel lines, or electric wiring.

3.1.3 Joint Deflection

3.1.3.1 Flexible Plastic Pipe

Maximum offset in alignment between adjacent pipe joints shall be as recommended by the manufacturer and approved by the Contracting Officer, but in no case shall it exceed 5 degrees.

3.1.4 Placing and Laying

Pipe and accessories shall be carefully lowered into the trench. Under no circumstances shall any of the water-line materials be dropped or dumped into the trench. Care shall be taken to avoid abrasion of the pipe

coating. Except where necessary in making connections with other lines or as authorized by the Contracting Officer, pipe shall be laid with the bells facing in the direction of laying. Pipe that has the grade or joint disturbed after laying shall be taken up and relaid. Pipe shall not be laid in water or when trench conditions are unsuitable for the work. Water shall be kept out of the trench until joints are complete. When work is not in progress, open ends of pipe, fittings, and valves shall be securely closed so that no trench water, earth, or other substance will enter the pipes or fittings. Where any part of the coating or lining is damaged, the repair shall be made by the Contractor at his expense in a satisfactory manner. Pipe ends left for future connections shall be valved, plugged, or capped, and anchored, as shown.

3.1.4.1 Plastic Pipe Installation

RTRP shall be installed in accordance with ASTM D 3839. RPMP shall be installed in accordance with the recommendations of the manufacturer. PE and PB shall be installed in accordance with ASTM D 2774. PVC shall be installed in accordance with AWWA M23.

3.1.4.2 PE, RTRP, and/or RPMP Manufacturer's Representative

The name and written qualifications of the manufacturer's field representative and written certification that the representative is technically qualified in all phases of PE, RTRP, and/or RPMP pipe laying and jointing and experienced to supervise the work and train the Contractor's field installers shall be submitted to the Contracting Officer prior to commencing installation. The representative shall be present at the job site during the installation and testing to provide technical assistance and to verify that the materials are being installed in accordance with the manufacturer's prescribed procedures. When the representative feels that the Contractor is installing and testing the PE, RTRP, and/or RPMP pipe in a satisfactory manner, he shall certify this in writing and note which individuals employed by the Contractor are capable of properly installing the pipe. The field representative shall advise the Contractor of unsatisfactory conditions immediately when they occur. Such conditions include improper diameter of pipe ends, damaged interior liner, poorly prepared joints, improper curing of joints, moving pipe before joints are cured, bending pipe to follow abrupt changes in trench contours, leaving pipe ends open in trench overnight, not properly drying joints after rain storms, exceeding effective adhesive life, sharp objects in trench bed, backfill that could damage pipe, improper procedure for concrete encasement of pipe, omission of thrust blocks at changes in direction or any other conditions which could have an adverse effect on the satisfactory completion and operation of the piping system.

3.1.4.3 Connections

Where connections are made between new work and existing mains, the connections shall be made by using specials and fittings to suit the actual conditions. Where made under pressure, these connections shall be installed using standard methods as approved by the Contracting Officer. Connections to existing asbestos-cement pipe shall be made in accordance with ACPPA-01.

3.1.4.4 Penetrations

Pipe passing through walls of structures shall be provided with ductile-iron or Schedule 40 steel wall sleeves. Annular space between

walls and sleeves shall be filled with rich cement mortar. Annular space between pipe and sleeves shall be filled with mastic.

3.1.5 Jointing

3.1.5.1 Polyethylene (PE) Pipe

Jointing shall comply with ASTM D 2657, Technique I-Socket Fusion or Technique II-Butt Fusion.

3.1.5.2 Polyvinyl Chloride (PVC) Plastic Pipe

a. Pipe less than 4 inch diameter: Threaded joints shall be made by wrapping the male threads with approved thread tape or applying an approved lubricant, then threading the joining members together. The joint shall be tightened using strap wrenches to prevent damage to the pipe and/or fitting. To avoid excessive torque, joints shall be tightened no more than one thread past hand-tight. Preformed rubber-ring gaskets for elastomeric-gasket joints shall be made in accordance with requirements of ASTM F 477 and as required herein. All pipe ends for push-on joints shall be beveled to facilitate assembly and marked to indicate when the pipe is fully seated. The gasket shall be prelubricated to prevent displacement. The gasket and ring groove in the bell or coupling shall match. The manufacturer of the pipe or fitting shall supply the elastomeric gasket. Couplings shall be provided with stops or centering rings to assure that the coupling is centered on the joint. Solvent cement joints shall use sockets conforming to the requirements of ASTM D 2467. The solvent cement used shall meet the requirements of ASTM D 2564; the joint assembly shall be made in accordance with ASTM D 2855 and the manufacturer's specific recommendations.

b. Pipe 4 Inch and Larger: Joints shall be elastomeric-gasket as specified in AWWA C900. Jointing procedure shall be as specified for pipe less than 4 inch diameter with configuration using elastomeric ring gasket.

3.1.5.3 RTRP I, RTRP II and RPMP Pipe

a. RTRP I: Assembly of the pipe shall be done in strict conformance with the manufacturer's written instruction and installation procedures. Field joints shall be prepared as specified by the pipe manufacturer. Several pipe joints having interference-fit type couplings may be field bonded and cured simultaneously. However, the pipe shall not be moved nor shall additional joints be made until the previously laid joints are completely cured. Joints not having interference-fit type coupling shall be fitted with a clamp which shall hold the joint rigidly in place until the joint cement has completely cured. The clamps shall have a protective material on the inner surface to prevent damage to the plastic pipe when the clamp is tightened in place. The pipe manufacturer shall provide a device or method to determine when the joint is pulled against the pipe stop. Additionally, the pipe manufacturer shall furnish a gauge to measure the diameter of the spigot ends to ensure the diameter conforms to the tolerances specified by the manufacturer. All pipe ends shall be gauged. Factory certified tests shall have been satisfactorily performed to verify that short-term rupture strength is 1,500 psi or greater

when carried out in accordance with ASTM D 1599. All field bonded epoxy-cemented joints, regardless of ambient temperature, shall be cured with a self-regulating thermostatically temperature controlled electrical heating blanket for the time and temperature recommended by the manufacturer for the applicable size and type of joint, or by an alternate heating method recommended by the manufacturer and approved by the Contracting Officer. The joint sections shall not be moved during heating or until the joint has cooled to ambient temperature.

b. RTRP II: A reinforced overlay joint shall be used to join sections together through a placement of layers of reinforcement fiberglass roving, mat, tape or fabric thoroughly saturated with compatible catalyzed resin.

c. Fittings and Specials for RTRP and RPMP Pipe: Metal to RTRP and RPMP pipe connections shall be made by bolting steel flanges to RTRP and RPMP pipe flanges. Cast-iron fitting with gasket bell or mechanical joint may be used with RTRP if pipe has cast iron outside diameter. Steel flanges shall be flat-faced type. Where raised-face steel flanges are used, spacer rings shall be used to provide a flat-face seat for RTRP and RPMP pipe flanges. A full-face Buna "N" gasket 1/8 inch thick with a shore hardness of 50-60 shall be used between all flanged connections. The RTRP and RPMP pipe flange shall have raised sealing rings. Flat washers shall be used under all nuts and bolts on RTRP and RPMP pipe flanges. Bolts and nuts shall be of noncorrosive steel and torqued to not more than 100 foot pounds. Flanges shall not be buried. A concrete pit shall be provided for all flanged connections.

3.1.5.4 Connections

Connections between different types of pipe and accessories shall be made with transition fittings approved by the Contracting Officer.

3.1.6 Service Lines

Service lines shall include the pipeline connecting building piping to water distribution lines to the connections with the building service at a point approximately 5 feet outside the building where such building service exists. Where building services are not installed, the Contractor shall terminate the service lines approximately 5 feet from the site of the proposed building at a point designated by the Contracting Officer. Such service lines shall be closed with plugs or caps. All service stops and valves shall be provided with service boxes. Service lines shall be constructed in accordance with the following requirements:

3.1.6.1 Service Lines

Service lines larger than 2 inches shall be connected to the main by a reducing tee, and shall have a gate valve.

3.1.6.2 Service Lines for Sprinkler Supplies

Water service lines used to supply building sprinkler systems for fire protection shall be connected to the water distribution main in accordance with NFPA 24.

3.1.7 Field Encasement of Fittings

Ductile-iron and gray-iron fittings shall be encased in an 8 mil thick polyethylene sleeve in accordance with AWWA C105.

3.2 Setting of Valves and Valve Boxes

3.2.1 Valves

After delivery, valves shall be drained to prevent freezing and shall have the interiors cleaned of all foreign matter before installation. Stuffing boxes shall be tightened and valves shall be fully opened and fully closed to ensure that all parts are in working condition. Valves and valve boxes shall be installed where shown or specified, and shall be set plumb. Valve boxes shall be centered on the valves. Boxes shall be installed over each outside gate valve unless otherwise shown. Where feasible, valves shall be located outside the area of roads and streets. Earth fill shall be carefully tamped around each valve box or pit to a distance of 4 feet on all sides of the box, or the undisturbed trench face if less than 4 feet.

3.2.2 Thrust Restraint

Plugs, caps, tees and bends deflecting 11-1/4 degrees or more, either vertically or horizontally, on waterlines 4 inches in diameter or larger, shall be provided with thrust restraints. Valves shall be securely anchored or shall be provided with thrust restraints to prevent movement. Thrust restraints shall be thrust blocks.

3.2.3 Thrust Blocks

Thrust blocking shall be concrete of a mix not leaner than: 1 cement, 2-1/2 sand, 5 gravel; and having a compressive strength of not less than 2,000 psi after 28 days. Blocking shall be placed between solid ground and the hydra t or fitting to be anchored. Unless otherwise indicated or directed, the base and thrust bearing sides of thrust blocks shall be poured directly against undisturbed earth. The sides of thrust blocks not subject to thrust may be poured against forms. The area of bearing shall be as shown or as directed. Blocking shall be placed so that the fitting joints will be accessible for repair. Steel rods and clamps, protected by galvanizing or by coating with bituminous paint, shall be used to anchor vertical down bends into gravity thrust blocks.

3.3 HYDROSTATIC TESTS

Where any section of a water line is provided with concrete thrust blocking for fitting, the hydrostatic tests shall not be made until at least 5 days after installation of the concrete thrust blocking, unless otherwise approved.

3.3.1 Pressure Test

After the pipe is laid, the joints completed and the trench partially backfilled leaving the joints exposed for examination, the newly laid piping or any valved section of piping shall, unless otherwise specified, be subjected for 1 hour to a hydrostatic pressure test of 200 psi. Each valve shall be opened and closed several times during the test. Exposed pipe, joints, fittings, and valves shall be carefully examined during the partially open trench test. Joints showing visible leakage shall be replaced or remade as necessary. Cracked or defective pipe, joints,

fittings, hydrants and valves, discovered in consequence of this pressure test shall be removed and replaced with sound material, and the test shall be repeated until the test results are satisfactory. The requirement for the joints to remain exposed for the hydrostatic tests may be waived by the Contracting Officer when one or more of the following conditions is encountered:

a. Wet or unstable soil conditions in the trench.

b. Compliance would require maintaining barricades and walkways around and across an open trench in a heavily used area that would require continuous surveillance to assure safe conditions.

c. Maintaining the trench in an open condition would delay completion of the contract.

The Contractor may request a waiver, setting forth in writing the reasons for the request and stating the alternative procedure proposed to comply with the required hydrostatic tests. Backfill placed prior to the tests shall be placed in accordance with the requirements of Section 02222 EXCAVATION, TRENCHING, AND BACKFILLING FOR UTILITIES SYSTEMS.

3.3.2 Leakage Test

Leakage test shall be conducted after the pressure tests have been satisfactorily completed. The duration of each leakage test shall be at least 2 hours, and during the test the water line shall be subjected to not less than 200 psi pressure. Leakage is defined as the quantity of water to be supplied into the newly laid pipe, or any valved or approved section thereof, necessary to maintain pressure within 5 psi of the specified leakage test pressure after the pipe has been filled with water and the air expelled. No piping installation will be accepted if leakage exceeds the allowable leakage which is determined by the following formula:

L = 0.0001351ND(P raised to 1/2 power)

L = Allowable leakage in gallons per hour
N = Number of joints in the length of pipeline tested
D = Nominal diameter of the pipe in inches
P = Average test pressure during the leakage test, in psi gauge

Should any test of pipe disclose leakage greater than that calculated by the above formula, the defective joints shall be located and repaired until the leakage is within the specified allowance, without additional cost to the Government.

3.3.3 Time for Making Test

Except for joint material setting or where concrete thrust blocks necessitate a 5-day delay, pipelines jointed with rubber gaskets, mechanical or push-on joints, or couplings may be subjected to hydrostatic pressure, inspected, and tested for leakage at any time after partial completion of backfill.

3.3.4 Concurrent Hydrostatic Tests

The Contractor may elect to conduct the hydrostatic tests using either or both of the following procedures. Regardless of the sequence of tests employed, the results of pressure tests, leakage tests, and disinfection

shall be satisfactory as specified. All replacement, repair or retesting required shall be accomplished by the Contractor at no additional cost to the Government.

a. Pressure test and leakage test may be conducted concurrently.

b. Hydrostatic tests and disinfection may be conducted concurrently, using the water treated for disinfection to accomplish the hydrostatic tests. If water is lost when treated for disinfection and air is admitted to the unit being tested, or if any repair procedure results in contamination of the unit, disinfection shall be reaccomplished.

3.4 DISINFECTION

3.4.1 Bacteriological Disinfection

Before acceptance of potable water operation, each unit of completed waterline shall be disinfected as prescribed by AWWA C651. From several points in the unit, personnel from the Contractor's commercial laboratory shall take at least 3 water samples from different points, approved by the Contracting Officer, in proper sterilized containers and perform a bacterial examination in accordance with state approved methods. The commercial laboratory must be certified by the state's approving authority for examination of potable water. The disinfection shall be repeated until tests indicate the absence of pollution for at least 2 full days. The unit will not be accepted until satisfactory bacteriological results have been obtained.

3.4.2 Lead Residual

Following the bacteriological disinfection and testing, the system shall be flushed with a sufficient velocity of water and sufficient tests performed at each hot- and cold-water discharge point until no less than 15 ppb lead residuals remain in the system. All tests and samples shall be performed in accordance with state and, if applicable, Federal regulations. Samples for testing are to be collected after a 6-hour continuous period of no flushing, and will be considered first draw samples. The commercial laboratory must be certified by the state's approving authority for examination of potable water. Lead residual test results are to be submitted to the Contracting Officer. The system will not be accepted until satisfactory bacteriological results and lead residual test results have been obtained. All flushing and testing for lead residuals, including all costs, are the responsibility of the Contractor.

3.5 CLEANUP

Upon completion of the installation of water lines, and appurtenances, all debris and surplus materials resulting from the work shall be removed.

-- End of Section --

SECTION TABLE OF CONTENTS

DIVISION 02 - SITE WORK

SECTION 02685

GAS DISTRIBUTION SYSTEM

12/93

PART 1 GENERAL

1.1 REFERENCES
1.2 GENERAL REQUIREMENTS
1.2.1 Jointing Polyethylene and Fiberglass Piping
1.2.2 Standard Products
1.2.3 Verification of Dimensions
1.2.4 Handling
1.3 SUBMITTALS

PART 2 PRODUCTS

2.1 PIPE, FITTINGS, AND ASSOCIATED MATERIALS
2.1.1 Steel Pipe for Aboveground Use
2.1.2 Small Fittings
2.1.3 Fittings, 2-Inch
2.1.4 Flange Gaskets
2.1.5 Pipe Threads
2.1.6 Polyethylene Pipe, Tubing, Fittings and Joints
2.1.7 Fiberglass Pipe, Fittings and Adhesive
2.1.8 Sealants for Steel Pipe Threaded Joints
2.1.8.1 Sealing Compound
2.1.8.2 Tape
2.1.9 Identification
2.1.10 Gas Transition Fittings
2.2 VALVES
2.2.1 Steel Valves
2.2.2 Polyethylene Valves
2.3 PRESSURE REGULATORS
2.3.1 Service Line Regulators
2.4 METERS

PART 3 EXECUTION

3.1 EXCAVATION AND BACKFILLING
3.2 SERVICE LINES
3.3 WORKMANSHIP AND DEFECTS
3.4 PROTECTIVE COVERING
3.4.1 Protective Covering for Aboveground Piping Systems
3.4.1.1 Ferrous Surfaces
3.4.1.2 Nonferrous Surfaces
3.5 INSTALLATION
3.5.1 Installing Pipe Underground
3.5.2 Installing Pipe Aboveground
3.6 PIPE JOINTS
3.6.1 Threaded Steel Joints

3.6.2 Welded Steel Joints
3.6.3 Polyethylene and Fiberglass Pipe Jointing Procedures
3.6.4 Connections Between Metallic and Plastic Piping
3.7 VALVE BOXES
3.8 PRESSURE REGULATOR INSTALLATION
3.8.1 Service Line Regulators
3.9 METER INSTALLATION
3.10 CONNECTIONS TO EXISTING LINES
3.10.1 Connection to Government Owned/Operated Gas Lines
3.11 TESTS
3.11.1 Destructive Tests of Plastic Pipe Joints
3.11.2 Pressure and Leak Tests

-- End of Section Table of Contents --

SECTION 02685

GAS DISTRIBUTION SYSTEM
12/93

PART 1 GENERAL

1.1 REFERENCES

The publications listed below form a part of this specification to the extent referenced. The publications are referred to in the text by basic designation only.

AMERICAN GAS ASSOCIATION (AGA)

AGA-01	(1989) A.G.A. Plastic Pipe Manual for Gas Service

AMERICAN NATIONAL STANDARDS INSTITUTE (ANSI)

ANSI B109.2	(1992) Diaphragm Type Gas Displacement Meters (Over 500 Cubic Feet per Hour Capacity)

AMERICAN PETROLEUM INSTITUTE (API)

API Spec 5L	(1995) Line Pipe
API Spec 6D	(1994) Specification for Pipeline Valves, (Gate, Plug, Ball, and Check Valves)

AMERICAN SOCIETY FOR TESTING AND MATERIALS (ASTM)

ASTM A 53	(1993a) Pipe, Steel, Black and Hot-Dipped, Zinc-Coated Welded and Seamless
ASTM D 2513	(1993) Thermoplastic Gas Pressure Pipe, Tubing, and Fittings
ASTM D 2517	(1981; R 1987) Reinforced Epoxy Resin Gas Pressure Pipe and Fittings
ASTM D 2683	(1993) Socket-Type Polyethylene Fittings for Outside Diameter-Controlled Polyethylene Pipe and Tubing
ASTM D 3261	(1993) Butt Heat Fusion Polyethylene (PE) Plastic Fittings for Polyethylene (PE) Plastic Pipe and Tubing
ASTM D 3308	(1991a) PTFE Resin Skived Tape
ASTM D 3350	(1993) Polyethylene Plastics Pipe and Fittings Materials

AMERICAN SOCIETY OF MECHANICAL ENGINEERS (ASME)

ASME B1.20.1	(1983; R 1992) Pipe Threads, General Purpose (Inch)
ASME B16.5	(1988; Errata Oct 1988; B16.5a) Pipe Flanges and Flanged Fittings
ASME B16.9	(1993) Factory-Made Wrought Steel Buttwelding Fittings
ASME B16.11	(1991) Forged Fittings, Socket-Welding and Threaded
ASME B16.21	(1992) Nonmetallic Flat Gaskets for Pipe Flanges
ASME B16.40	(1985; R 1994) Manually Operated Thermoplastic Gas Shutoffs and Valves in Gas Distribution Systems
ASME B31.8	(1992; B31.8a; B31.8b; B31.8c) Gas Transmission and Distribution Piping Systems

CODE OF FEDERAL REGULATIONS (CFR)

49 CFR 192	Transportation of Natural and Other Gas by Pipeline: Minimum Federal Safety Standards

FEDERAL SPECIFICATIONS (FS)

FS TT-P-102	(Rev F) Paint, Oil, (Alkyd Modified, Exterior, Low VOC

MANUFACTURERS STANDARDIZATION SOCIETY OF THE VALVE AND FITTINGS INDUSTRY (MSS)

MSS SP-25	(1993) Standard Marking System for Valves, Fittings, Flanges and Unions
MSS SP-84	(1990) Valves - Socket Welding and Threaded Ends

STEEL STRUCTURES PAINTING COUNCIL (SSPC)

SSPC Paint 25	(1991) Red Iron Oxide, Zinc Oxide, Raw Linseed Oil and Alkyd Primer (without Lead and Chromate Pigments)
SSPC SP 1	(1982) Solvent Cleaning
SSPC SP 3	(1989) Power Tool Cleaning
SSPC SP 7	(1991) Brush-Off Blast Cleaning

UNDERWRITERS LABORATORIES (UL)

UL-06	(1994; Supple) Gas and Oil Equipment Directory

1.2 GENERAL REQUIREMENTS

1.2.1 Jointing Polyethylene and Fiberglass Piping

Piping shall be joined by performance qualified joiners using qualified procedures in accordance with AGA-01. Manufacturer's prequalified joining procedures shall be used. Joints shall be inspected by an inspector qualified in the joining procedures being used and in accordance with AGA-01. Joiners and inspectors shall be qualified at the jobsite by a person who has been trained and certified by the manufacturer of the pipe, to train and qualify joiners and inspectors in each joining procedure to be used on the job. Training shall include use of equipment, explanation of the procedure, and successfully making joints which pass tests specified in AGA-01. The Contracting Officer shall be notified at least 24 hours in advance of the date to qualify joiners and inspectors.

1.2.2 Standard Products

Materials and equipment shall be the standard products of a manufacturer regularly engaged in the manufacture of the products and shall essentially duplicate items that have been in satisfactory use for at least 2 years prior to bid opening. Asbestos or products containing asbestos shall not be used. Equipment shall be supported by a service organization that is, in the opinion of the Contracting Officer, reasonably convenient to the site. Valves, flanges, and fittings shall be marked in accordance with MSS SP-25.

1.2.3 Verification of Dimensions

The Contractor shall become familiar with all details of the work, verify all dimensions in the field, and shall advise the Contracting Officer of any discrepancy before performing the work.

1.2.4 Handling

Pipe and components shall be handled carefully to ensure a sound, undamaged condition. Particular care shall be taken not to damage pipe coating. No pipe or material of any kind shall be placed inside another pipe or fitting after the coating has been applied, except as specified in paragraph INSTALLATION. Plastic pipe shall be handled in conformance with AGA-01.

1.3 SUBMITTALS

Government approval is required for submittals with a "GA" designation; submittals having an "FIO" designation are for information only. The following shall be submitted in accordance with Section 01300 SUBMITTAL PROCEDURES:

SD-04 Drawings

Pipe, Fittings, and Associated Materials; FIO.

Drawings shall contain complete schematic and piping diagrams and any other details required to demonstrate that the system has been coordinated and will properly function as a unit. Drawings shall show proposed layout and anchorage of the system and appurtenances, and equipment relationship to other parts of the work including clearances for maintenance and operation.

SD-07 Schedules

Equipment and Materials; FIO.

A complete list of equipment and materials, including manufacturer's descriptive and technical literature, performance charts and curves, catalog cuts, and installation instructions, including, but not limited to the following:

a. Meters.

b. Regulators.

Notification; GA.

Notification of the Contractor's schedule for making connections to existing gas lines, at least 10 days in advance.

SD-08 Statements

Jointing Polyethylene and Fiberglass Piping; GA.

A copy of qualified jointing procedures, training procedures, qualifications of trainer, and training test results for joiners and inspectors.

Connection and Abandonment Procedures; GA.

A copy of procedures for gas line tie in, hot taps, abandonment/removal or demolition, purging, and plugging as applicable in accordance with ASME B31.8.

SD-13 Certificates

Training; FIO.

A copy of each inspector's and jointer's training certificate with respective test results.

PART 2 PRODUCTS

2.1 PIPE, FITTINGS, AND ASSOCIATED MATERIALS

2.1.1 Steel Pipe for Aboveground Use

Steel pipe shall conform to ASTM A 53, Grade A or B, Type E or S, Schedule 40; or API Spec 5L seamless or electric resistance welded, Schedule 40, black steel pipe as specified in ASME B31.8. Furnace buttwelded pipe may be used in sizes 1-1/2 inches and smaller.

2.1.2 Small Fittings

Fittings 1-1/2 inches and smaller shall conform to ASME B16.11.

2.1.3 Fittings, 2-Inch

Pipe flanges and flanged fittings including bolts, nuts, and bolt patterns shall be in accordance with ASME B16.5, Class 150. Buttweld fittings shall be in accordance with ASME B16.9. Weld neck flanges shall be used.

2.1.4 Flange Gaskets

Gaskets shall be non-asbestos compressed material in accordance with ASME B16.21, 1/16 inch minimum thickness, full face or self-centering flat ring type. The gaskets shall contain aramid fibers bonded with nitrile butadiene rubber (NBR), or glass fibers bonded with polytetrafluorethylene, suitable for maximum 600 degrees F service and meeting applicable requirements of ASME B31.8.

2.1.5 Pipe Threads

Pipe threads shall conform to ASME B1.20.1.

2.1.6 Polyethylene Pipe, Tubing, Fittings and Joints

Polyethylene pipe, tubing, fittings and joints shall conform to ASTM D 3350 and ASTM D 2513, pipe designations PE 2406 and PE 3408, rated SDR 11 or less, as specified in ASME B31.8. Pipe sections shall be marked as required by ASTM D 2513. Butt fittings shall conform to ASTM D 3261 and socket fittings shall conform to ASTM D 2683. Fittings shall match the service rating of the pipe.

2.1.7 Fiberglass Pipe, Fittings and Adhesive

Fiberglass pipe, fittings and adhesive shall conform to ASTM D 2517. Pipe sections shall be marked as required by ASTM D 2517.

2.1.8 Sealants for Steel Pipe Threaded Joints

2.1.8.1 Sealing Compound

Joint sealing compound shall be as listed in UL-06, Class 20 or less.

2.1.8.2 Tape

Polytetrafluoroethylene tape shall conform to ASTM D 3308.

2.1.9 Identification

Pipe flow markings and metal tags for each valve, meter, and regulator shall be provided as required by the Contracting Officer.

2.1.10 Gas Transition Fittings

Gas transition fittings shall be manufactured steel fittings approved for jointing steel and polyethylene or fiberglass pipe. Approved transition fittings are those that conform to AGA-01 requirements for transition fittings.

2.2 VALVES

Valves shall be suitable for shutoff or isolation service and shall conform to the following:

2.2.1 Steel Valves

Steel valves 1-1/2 inches and smaller installed underground shall conform to MSS SP-84, carbon steel, socket weld ends, with square wrench operator

adaptor. Steel valves 1-1/2 inches and smaller installed aboveground shall conform to MSS SP-84, carbon steel, socket weld or threaded ends with handwheel or wrench operator. 2-inch steel valves installed underground shall conform to API Spec 6D, carbon steel, buttweld ends, Class 150 with square wrench operator adaptor. Steel valves installed aboveground shall conform to API Spec 6D, carbon steel, buttweld or flanged ends, Class 150 with handwheel or wrench operator.

2.2.2 Polyethylene Valves

Polyethylene valves shall conform to ASME B16.40. Polyethylene valves may be used with polyethylene distribution and service lines, in lieu of steel valves, for underground installation only.

2.3 PRESSURE REGULATORS

Regulators shall have ferrous bodies, shall provide backflow and vacuum protection, and shall be designed to meet the pressure, load and other service conditions.

2.3.1 Service Line Regulators

Pressure regulators for individual service lines shall have ferrous bodies. Regulator shall be capable of reducing distribution line pressure to pressures required for users. Regulators shall be provided where gas will be distributed at pressures in excess of 10 inches of water column. Pressure relief shall be set at a lower pressure than would cause unsafe operation of any connected user. Regulator shall have single port with orifice diameter no greater than that recommended by the manufacturer for the maximum gas pressure at the regulator inlet. Regulator valve vent shall be of resilient materials designed to withstand flow conditions when pressed against the valve port. Regulator shall be capable of regulating downstream pressure within limits of accuracy and shall be capable of limiting the buildup of pressure under no-flow conditions to 50 percent or less of the discharge pressure maintained under flow conditions. Regulator shall have a self contained service regulator. Regulator pipe connections shall not exceed 2 inch size.

2.4 METERS

Meters shall conform to ANSI B109.2, Style B without resettable counter. Meters shall be pedestal mounted and be provided with a strainer immediately upstream. Meters shall be provided with frost protection. Meters shall be suitable for accurately measuring and handling gas at existing pressures, temperatures, and flow rates indicated. Meters shall have a pulse switch initiator capable of operating up to speeds of 500 pulses per minute with no false pulses and shall require no field adjustments. Initiators shall provide the maximum number of pulses up to 500 per minute that is obtainable from the manufacturer. It shall provide not less than one pulse per 100 cubic feet of gas.

PART 3 EXECUTION

3.1 EXCAVATION AND BACKFILLING

Earthwork shall be as specified in Section 02222 EXCAVATION, TRENCHING, AND BACKFILLING FOR UTILITIES SYSTEMS.

3.2 SERVICE LINES

Service lines shall be constructed of polyethylene or fiberglass underground and steel aboveground, and shall extend from a gas main to and including the point of delivery within 5 feet of the building. The point of delivery is the meter set assembly. The service lines shall be connected to the gas mains as indicated. Where indicated, service line shall be provided with an isolation valve of the same size as the service line. The service lines shall be as short and as straight as practicable between the point of delivery and the gas main and shall not be bent or curved laterally unless necessary to avoid obstructions or otherwise permitted. Service lines shall be laid with as few joints as practicable using standard lengths of pipe. Shorter lengths shall be used only for closures. Polyethylene or fiberglass service lines shall not be installed aboveground.

3.3 WORKMANSHIP AND DEFECTS

Pipe, tubing, and fittings shall be clear and free of cutting burrs and defects in structure or threading and shall be thoroughly brushed and blown free of chips and scale. Defective pipe, tubing, or fittings shall be replaced and shall not be repaired.

3.4 PROTECTIVE COVERING

3.4.1 Protective Covering for Aboveground Piping Systems

Finish painting shall conform to the applicable paragraphs of Section 09900 PAINTING, GENERAL and as follows:

3.4.1.1 Ferrous Surfaces

Shop primed surfaces shall be touched up with ferrous metal primer same type paint as the shop primer. Surfaces that have not been shop primed shall be solvent-cleaned in accordance with SSPC SP 1. Surfaces that contain loose rust, loose mill scale, and other foreign substances shall be mechanically cleaned by power wire brushing in accordance with SSPC SP 3 or brush-off blast cleaned in accordance with SSPC SP 7 and primed with ferrous metal primer in accordance with SSPC Paint 25. Primed surfaces shall be finished with two coats of exterior oil paint conforming to FS TT-P-102.

3.4.1.2 Nonferrous Surfaces

Nonferrous surfaces shall not be painted.

3.5 INSTALLATION

Gas distribution system and equipment shall be installed in conformance with the manufacturer's recommendations and applicable sections of ASME B31.8, AGA-01 and 49 CFR 192. Abandoning existing gas piping shall be done in accordance with ASME B31.8. Pipe shall be cut without damaging the pipe. Unless otherwise authorized, cutting shall be done by an approved type of mechanical cutter. Wheel cutters shall be used where practicable. Cutting of plastic pipe shall be in accordance with AGA-01. Valve installation in plastic pipe shall be designed to protect the plastic pipe against excessive torsional or shearing loads when the valve is operated and from other stresses which may be exerted through the valve or valve box.

3.5.1 Installing Pipe Underground

Service lines shall be graded as indicated. Service lines shall have 36 inch minimum cover; and shall be placed on firmly compacted select material for the full length. Trench shall be excavated below pipe grade, bedded with bank sand, and compacted to provide full-length bearing. Laying the pipe on blocks to produce uniform grade will not be permitted. The pipe shall be clean inside before it is lowered into the trench and shall be kept free of water, soil, and all other foreign matter that might damage or obstruct the operation of the valves, regulators, meters, or other equipment. When work is not in progress, open ends of pipe or fittings shall be securely closed by expandable plugs or other suitable means. Minor changes in line or gradient of pipe that can be accomplished through the natural flexibility of the pipe material without producing permanent deformation and without overstressing joints may be made when approved. Changes in line or gradient that exceed the limitations specified shall be made with fittings. When polyethylene or fiberglass piping is installed underground, foil backed magnetic tape shall be placed above the pipe to permit locating with a magnetic detector. After laying of pipe and testing, trench shall be backfilled in accordance with Section 02222 EXCAVATION, TRENCHING AND BACKFILLING FOR UTILITY SYSTEMS.

3.5.2 Installing Pipe Aboveground

Aboveground piping shall be protected against dirt and other foreign matter as specified for underground piping. Joints in steel pipe shall be welded, except for installation of valves, meters and regulators. Joints in pipe 1-1/2 inches in diameter and smaller may be threaded; joints may also be threaded to accommodate the installation of valves. Flanges for connection to valves, meters and regulators shall be of the weld neck type to match wall thickness of pipe.

3.6 PIPE JOINTS

Pipe joints shall be designed and installed to effectively sustain the longitudinal pullout forces caused by the contraction of piping or superimposed loads.

3.6.1 Threaded Steel Joints

Threaded joints in steel pipe shall have tapered threads evenly cut and shall be made with UL approved graphite joint sealing compound for gas service or polytetrafluoroethylene tape applied to the male threads only. Caulking of threaded joints to stop or prevent leaks will not be permitted.

3.6.2 Welded Steel Joints

Changes in direction of piping shall be made with welding fittings only; mitering or notching pipe to form elbows and tees or other similar type construction will not be permitted. Branch connection may be made with welding tees. Branch outlet fittings shall be forged, flared for improvement of flow where attached to the run, and reinforced against external strains. Beveling, alignment, heat treatment, and inspection of weld shall conform to ASME B31.8. Weld defects shall be removed and repairs made to the weld, or the weld joints shall be entirely removed and rewelded. After filler metal has been removed from its original package, it shall be protected or stored so that its characteristics or welding properties are not affected adversely. Electrodes that have been wetted or have lost any of their coating shall not be used.

3.6.3 Polyethylene and Fiberglass Pipe Jointing Procedures

Jointing procedures shall conform to AGA-01. Indiscriminate heat fusion joining of plastic pipe or fittings made from different polyethylene resins by classification or by manufacturer shall be avoided if other alternative joining procedures are available. If heat fusion joining of dissimilar polyethylenes is required, special procedures are required. The method of heat fusion joining dissimilar polyethylene resins shall be tested in accordance with paragraph TESTS, subparagraph Destructive Tests of Plastic Pipe Joints.

3.6.4 Connections Between Metallic and Plastic Piping

Connections shall be made only outside, underground, and with approved transition fittings.

3.7 VALVE BOXES

Valve boxes of cast iron not less than 3/16 inch thick shall be installed at each underground valve except where concrete or other type of housing is indicated. Valve boxes shall be provided with locking covers that require a special wrench for removal. Wrench shall be furnished for each box. The word "gas" shall be cast in the box cover. When the valve is located in a roadway, the valve box shall be protected by a suitable concrete slab at least 3 square feet. When in a sidewalk, the top of the box shall be in a concrete slab 2 feet square and set flush with the sidewalk. Boxes shall be adjustable extension type with screw or slide-type adjustments. Valve boxes shall be separately supported, not resting on the pipe, so that no traffic loads can be transmitted to the pipe. Valves shall only be located in valve boxes, on meter settings, or inside of buildings.

3.8 PRESSURE REGULATOR INSTALLATION

3.8.1 Service Line Regulators

A shutoff valve, meter set assembly, and service regulator shall be installed on the service line outside the building, 18 inches above the ground on the riser. A 3/8 inch tapped fitting equipped with a plug shall be provided on both sides of the service regulator for installation of pressure gauges for adjusting the regulator. All service regulator vents and relief vents shall terminate in the outside air in rain and insect resistant fittings. The open end of the vent shall be located where gas can escape freely into the atmosphere, away from any openings into the building and above areas subject to flooding.

3.9 METER INSTALLATION

Meters shall be installed in accordance with ASME B31.8. Permanent gas meters shall be installed with provisions for isolation and removal for calibration and maintenance, and shall be suitable for operation in conjunction with an energy monitoring and control system.

3.10 CONNECTIONS TO EXISTING LINES

Connections between new work and existing gas lines, where required, shall be made in accordance with ASME B31.8 using proper fittings to suit the actual conditions. When connections are made by tapping into a gas main, the connecting fittings shall be the same size as the pipe being connected.

3.10.1 Connection to Government Owned/Operated Gas Lines

The Contractor shall provide connections to the existing gas lines in accordance with approved procedures. Deactivation of any portion of the existing system shall only be done at the valve location shown on the drawings. Reactivation of any existing gas lines will only be done by the Government. The Contractor's Connection and Abandonment Plan shall be submitted and approved prior to making any connections to existing gas lines. This plan shall include the Operating Agency's required procedures which may be obtained from Base Civil Engineering. The Contractor shall notify the Contracting Officer, in writing, 10 days before connections to existing lines are to be made.

3.11 TESTS

3.11.1 Destructive Tests of Plastic Pipe Joints

Each day, prior to making polyethylene heat fusion joints or fiberglass adhesive joints, a joint of each size and type to be installed that day shall be made by each person performing joining of plastic pipe that day and destructively tested. At least 3 longitudinal straps shall be cut from each joint. Each strap shall be visually examined, shall not contain voids or discontinuities on the cut surfaces of the joint area, and shall be deformed by bending, torque, or impact, and if failure occurs, it must not initiate in the joint area. If a joint fails the visual or deformation test, the qualified joiner who made that joint shall not make further field joints in plastic pipe on this job until that person has been retrained and requalified. The results of the destructive tests shall be recorded to include the date and time of the tests, size and type of the joints, ambient conditions, fusion iron temperature and names of inspectors and joiners.

3.11.2 Pressure and Leak Tests

The system of service lines shall be tested after construction and before being placed in service using air as the test medium. The normal operating pressure for the system is 30 psig. The test pressure is 60 psig. Prior to testing the system, the interior shall be blown out, cleaned and cleared of all foreign materials. All meters, regulators, and controls shall be removed before blowing out and cleaning and reinstalled after clearing of all foreign materials. Testing of gas mains and service lines shall be done with due regard for the safety of employees and the public during the test. Persons not working on the test operations shall be kept out of the testing area while testing is proceeding. The test shall be made on the system as a whole or on sections that can be isolated. Joints in sections shall be tested prior to backfilling when trenches must be backfilled before the completion of other pipeline sections. The test shall continue for at least 24 hours from the time of the initial readings to the final readings of pressure and temperature. The initial test readings of the instrument shall not be made for at least 1 hour after the pipe has been subjected to the full test pressure, and neither the initial nor final readings shall be made at times of rapid changes in atmospheric conditions. The temperatures shall be representative of the actual trench conditions. There shall be no indication of reduction of pressure during the test after corrections have been made for changes in atmospheric conditions in conformity with the relationship $T(1)P(2)=T(2)P(1)$, in which T and P denote absolute temperature and pressure, respectively, and the numbers denote initial and final readings. During the test, the entire system shall be completely isolated from all compressors and other sources of air pressure.

Each joint shall be tested by means of soap and water or an equivalent nonflammable solution prior to backfilling or concealing any work. The testing instruments shall be approved by the Contracting Officer. All labor, materials and equipment for conducting the tests shall be furnished by the Contractor and shall be subject to inspection at all times during the tests. The Contractor shall maintain safety precautions for air pressure testing at all times during the tests.

-- End of Section --

SECTION TABLE OF CONTENTS

DIVISION 02 - SITE WORK

SECTION 02720

STORM-DRAINAGE SYSTEM

06/91

PART 1 GENERAL

1.1 REFERENCES
1.2 SUBMITTALS
1.3 DELIVERY, STORAGE, AND HANDLING
1.3.1 Delivery and Storage
1.3.2 Handling

PART 2 PRODUCTS

2.1 PIPE FOR STORM DRAINS
2.1.1 Concrete Pipe
2.1.2 PVC Pipe
2.1.2.1 Type PSM PVC Pipe
2.1.2.2 Profile PVC Pipe
2.1.3 PE Pipe
2.1.3.1 Smooth Wall PE Pipe
2.1.3.2 Corrugated PE Pipe
2.2 MISCELLANEOUS MATERIALS
2.2.1 Concrete
2.2.2 Mortar
2.2.3 Precast Reinforced Concrete Manholes
2.2.4 Frame and Cover or Gratings
2.2.5 Joints
2.2.5.1 Flexible Watertight Joints
2.2.5.2 PVC Plastic Pipes
2.2.5.3 Smooth Wall PE Plastic Pipe
2.2.5.4 Corrugated PE Plastic Pipe

PART 3 EXECUTION

3.1 EXCAVATION FOR STORM DRAINS AND DRAINAGE STRUCTURES
3.1.1 Trenching
3.1.2 Removal of Unstable Material
3.2 BEDDING
3.2.1 Concrete Pipe
3.2.2 Plastic Pipe
3.3 PLACING PIPE
3.3.1 Concrete and PVC Pipe
3.3.2 Corrugated PE Pipe
3.4 JOINTS
3.4.1 Concrete Pipe
3.4.1.1 Cement-Mortar Bell-and-Spigot Joint
3.4.1.2 Cement-Mortar Oakum Joint for Bell-and-Spigot Pipe
3.4.1.3 Cement-Mortar Diaper Joint for Bell-and-Spigot Pipe
3.4.1.4 Cement-Mortar Tongue-and-Groove Joint

3.4.1.5 Cement-Mortar Diaper Joint for Tongue-and-Groove Pipe
3.4.1.6 Plastic Sealing Compound Joints for Tongue-and-Grooved Pipe
3.4.1.7 Flexible Watertight Joints
3.5 DRAINAGE STRUCTURES
3.5.1 Manholes and Inlets
3.6 BACKFILLING
3.6.1 Backfilling Pipe in Trenches
3.6.2 Movement of Construction Machinery
3.6.3 Compaction

-- End of Section Table of Contents --

SECTION 02720

STORM-DRAINAGE SYSTEM
06/91

PART 1 GENERAL

1.1 REFERENCES

The publications listed below form a part of this specification to the extent referenced. The publications are referred to in the text by basic designation only.

AMERICAN ASSOCIATION OF STATE HIGHWAY AND TRANSPORTATION OFFICIALS (AASHTO)

AASHTO-01	(1992; interim specs 1993 w/errata) Standard Specifications for Highway Bridges
AASHTO M 198	(1975; Rev 1986) Joints for Circular Concrete Sewer and Culvert Pipe Using Flexible Watertight Gaskets
AASHTO M 294	(1993) Corrugated Polyethylene Pipe, 12-to 36 in. Diameter

AMERICAN SOCIETY FOR TESTING AND MATERIALS (ASTM)

ASTM A 48	(1994a) Gray Iron Castings
ASTM A 536	(1984; R 1993) Ductile Iron Castings
ASTM C 76	(1994) Reinforced Concrete Culvert, Storm Drain, and Sewer Pipe
ASTM C 231	(1991b) Air Content of Freshly Mixed Concrete by the Pressure Method
ASTM C 270	(1995) Mortar for Unit Masonry
ASTM C 443	(1994) Joints for Circular Concrete Sewer and Culvert Pipe, Using Rubber Gaskets
ASTM C 478	(1994) Precast Reinforced Concrete Manhole Sections
ASTM D 1751	(1983; R 1991) Preformed Expansion Joint Filler for Concrete Paving and Structural Construction (Nonextruding and Resilient Bituminous Types)
ASTM D 1752	(1984; R 1992) Preformed Sponge Rubber and Cork Expansion Joint Fillers for Concrete Paving and Structural Construction
ASTM D 1784	(1992) Rigid Poly(Vinyl Chloride) (PVC)

	Compounds and Chlorinated Poly(Vinyl Chloride) (CPVC) Compounds
ASTM D 2321	(1989) Underground Installation of Thermoplastic Pipe for Sewers and Other Gravity-Flow Applications
ASTM D 3034	(1994) Type PSM Poly(Vinyl Chloride) (PVC) Sewer Pipe and Fittings
ASTM D 3350	(1993) Polyethylene Plastics Pipe and Fittings Materials
ASTM F 477	(1993) Elastomeric Seals (Gaskets) for Joining Plastic Pipe
ASTM F 714	(1994) Polyethylene (PE) Plastic Pipe (SDR-PR) Based on Outside Diameter
ASTM F 794	(1993a) Poly(Vinyl Chloride) (PVC) Profile Gravity Sewer Pipe and Fittings Based on Controlled Inside Diameter

1.2 SUBMITTALS

Government approval is required for submittals with a "GA" designation; submittals having an "FIO" designation are for information only. The following shall be submitted in accordance with Section 01300 SUBMITTAL PROCEDURES:

SD-06 Instructions

Placing Pipe; FIO.

Printed copies of the manufacturer's recommendations for installation procedures of the material being placed, prior to installation.

SD-13 Certificates

Resin Certification; FIO. Pipeline Testing; FIO. Determination of Density ; FIO. Frame and Cover or Gratings; GA.

Certified copies of test reports demonstrating conformance to applicable pipe specifications, before pipe is installed. Certification on the ability of frame and cover or gratings to carry the imposed live load.

1.3 DELIVERY, STORAGE, AND HANDLING

1.3.1 Delivery and Storage

Materials delivered to site shall be inspected for damage, unloaded, and stored with a minimum of handling. Materials shall not be stored directly on the ground. The inside of pipes and fittings shall be kept free of dirt and debris. Gasket materials and plastic materials shall be protected from exposure to the direct sunlight over extended periods.

1.3.2 Handling

Materials shall be handled in such a manner as to ensure delivery to the trench in sound, undamaged condition. Pipe shall be carried to the trench,

not dragged.

PART 2 PRODUCTS

2.1 PIPE FOR STORM DRAINS

Pipe for storm drains shall be of the sizes indicated and shall conform to the requirements specified.

2.1.1 Concrete Pipe

ASTM C 76, Class III.

2.1.2 PVC Pipe

The pipe manufacturer's resin certification indicating the cell classification of PVC used to manufacture the pipe shall be submitted prior to installation of the pipe.

2.1.2.1 Type PSM PVC Pipe

ASTM D 3034, Type PSM, maximum SDR 35, produced from PVC certified by the compounder as meeting the requirements of ASTM D 1784, minimum cell class 12454-B.

2.1.2.2 Profile PVC Pipe

ASTM F 794, Series 46, produced from PVC certified by the compounder as meeting the requirements of ASTM D 1784, minimum cell class 12454-B.

2.1.3 PE Pipe

The pipe manufacturer's resin certification indicating the cell classification of PE used to manufacture the pipe shall be submitted prior to installation of the pipe. The minimum cell classification for polyethylene plastic shall apply to each of the seven primary properties of the cell classification limits in accordance with ASTM D 3350.

2.1.3.1 Smooth Wall PE Pipe

ASTM F 714, maximum DR of 21. Pipe shall be produced from PE certified by the resin producer as meeting the requirements of ASTM D 3350, minimum cell class 335434C.

2.1.3.2 Corrugated PE Pipe

AASHTO M 294, Type S, produced from PE certified by the resin producer as meeting the requirements of ASTM D 3350, minimum cell class 315412C or 324420C. Pipe walls shall have the following properties:

Nominal Size (in.)	Minimum Wall Area (square in/ft)	Minimum Moment of Inertia of Wall Section (in to the 4th/in)
12	1.50	0.024

2.2 MISCELLANEOUS MATERIALS

2.2.1 Concrete

Unless otherwise specified, concrete and reinforced concrete shall conform to the requirements for 3,000 psi concrete under Section 03300 CAST-IN-PLACE STRUCTURAL CONCRETE. The concrete mixture shall have air content by volume of concrete, based on measurements made immediately after discharge from the mixer, of 5 to 7 percent when maximum size of coarse aggregate exceeds 1-1/2 inches. Air content shall be determined in accordance with ASTM C 231. The concrete covering over steel reinforcing shall not be less than 1 inch thick for covers and not less than 1-1/2 inches thick for walls and flooring. Concrete covering deposited directly against the ground shall have a thickness of at least 3 inches between steel and ground. Expansion-joint filler material shall conform to ASTM D 1751, or ASTM D 1752, or shall be resin-impregnated fiberboard conforming to the physical requirements of ASTM D 1752.

2.2.2 Mortar

Mortar for pipe joints, connections to other drainage structures, and brick or block construction shall conform to ASTM C 270, Type M, except the maximum placement time shall be 1 hour. The quantity of water in the mixture shall be sufficient to produce a stiff workable mortar but in no case shall exceed 6.0 gallons of water per sack of cement. Water shall be clean and free of harmful acids, alkalies, and organic impurities. The mortar shall be used within 30 minutes after the ingredients are mixed with water. The inside of the joint shall be wiped clean and finished smooth. The mortar head on the outside shall be protected from air and sun with a proper covering until satisfactorily cured.

2.2.3 Precast Reinforced Concrete Manholes

Precast reinforced concrete manholes shall conform to ASTM C 478. Joints between precast concrete risers and tops shall be full-bedded in cement mortar and shall be smoothed to a uniform surface on both interior and exterior of the structure or shall be made with flexible watertight, rubber-type gaskets meeting the requirements of paragraph JOINTS.

2.2.4 Frame and Cover or Gratings

Frame and cover or gratings shall be cast gray iron, ASTM A 48, Class 35B; cast ductile iron or ASTM A 536, Grade 65-45-12. Weight, shape, size, and waterway openings for grates shall be as indicated on the plans.

2.2.5 Joints

2.2.5.1 Flexible Watertight Joints

a. Materials: Flexible watertight joints shall be made with plastic or rubber-type gaskets for concrete pipe. The design of joints and the physical requirements for plastic gaskets shall conform to AASHTO M 198, and rubber-type gaskets shall conform to ASTM C 443. Gaskets shall have not more than one factory-fabricated splice.

2.2.5.2 PVC Plastic Pipes

Joints shall be solvent cement or elastomeric gasket type in accordance with the specification for the pipe and as recommended by the pipe

manufacturer.

2.2.5.3 Smooth Wall PE Plastic Pipe

Pipe shall be joined using butt fusion method as recommended by the pipe manufacturer.

2.2.5.4 Corrugated PE Plastic Pipe

Water tight joints shall be made using a PVC or PE coupling and rubber gaskets as recommended by the pipe manufacturer. Rubber gaskets shall conform to ASTM F 477. Soil tight joints shall conform to the requirements in AASHTO-01, Division II, Section 26.4.2.4. (e) for soil tightness and shall be as recommended by the pipe manufacturer.

PART 3 EXECUTION

3.1 EXCAVATION FOR STORM DRAINS AND DRAINAGE STRUCTURES

Excavation of trenches and for appurtenances and backfilling for storm drains shall be in accordance with the applicable portions of Section 02222 EXCAVATION, TRENCHING, AND BACKFILLING FOR UTILITIES SYSTEMS and the requirements specified below.

3.1.1 Trenching

The width of trenches at any point below the top of the pipe shall be not greater than the outside diameter of the pipe plus 12 inches to permit satisfactory jointing and thorough tamping of the bedding material under and around the pipe. Sheeting and bracing where required shall be placed within the trench width as specified. Care shall be taken not to overexcavate. Where trench widths are exceeded, redesign with a resultant increase in cost of stronger pipe or special installation procedures shall be necessary. Cost of this redesign and increased cost of pipe or installation shall be borne by the Contractor without additional cost to the Government.

3.1.2 Removal of Unstable Material

Where wet or otherwise unstable soil incapable of properly supporting the pipe, as determined by the Contracting Officer, is unexpectedly encountered in the bottom of a trench, such material shall be removed to the depth required and replaced to the proper grade with select granular material, compacted as provided in paragraph BACKFILLING. When removal of unstable material is due to the fault or neglect of the Contractor in his performance of shoring and sheeting, water removal, or other specified requirements, such removal and replacement shall be performed at no additional cost to the government.

3.2 BEDDING

The bedding surface for the pipe shall provide a firm foundation of uniform density throughout the entire length of the pipe.

3.2.1 Concrete Pipe

Concrete pipe shall be bedded as shown on Sheet C302.

3.2.2 Plastic Pipe

Bedding for PVC and PE pipe shall meet the requirements of ASTM D 2321. Bedding, haunching, and initial backfill shall be either Class IB or II material.

3.3 PLACING PIPE

Each pipe shall be carefully examined before being laid, and defective or damaged pipe shall not be used. Plastic pipe shall be protected from exposure to the direct sunlight prior to laying as needed to maintain adequate pipe stiffness and meet installation deflection requirements. Pipelines shall be laid to the grades and alignment indicated. Proper facilities shall be provided for lowering sections of pipe into trenches. Under no circumstances shall pipe be laid in water, and no pipe shall be laid when trench conditions or weather are unsuitable for such work. Diversion of drainage or dewatering of trenches during construction shall be provided as necessary. Deflection of installed plastic pipe shall not exceed 4.5 percent of the nominal inside diameter. After backfilling has been completed, the Government may perform a deflection test on the entire length of installed plastic pipeline using a mandrel or other suitable device. Any plastic pipe showing deflections in excess of 4.5 percent shall be removed and replaced at the Contractor's expense. All pipe in place shall be inspected before backfilling, and those pipes damaged during placement shall be removed and replaced.

3.3.1 Concrete and PVC Pipe

Laying shall proceed upgrade with spigot ends of bell-and-spigot pipe and tongue ends of tongue-and-groove pipe pointing in the direction of the flow.

3.3.2 Corrugated PE Pipe

Laying shall be with the separate sections joined firmly on a bed shaped to line and grade and shall follow manufacturer's recommendations.

3.4 JOINTS

3.4.1 Concrete Pipe

3.4.1.1 Cement-Mortar Bell-and-Spigot Joint

The first pipe shall be bedded to the established gradeline, with the bell end placed upstream. The interior surface of the bell shall be carefully cleaned with a wet brush and the lower portion of the bell filled with mortar to such depth as to bring inner surfaces of abutting pipes flush and even. The spigot end of each subsequent pipe shall be cleaned with a wet brush and uniformly matched into a bell so that sections are closely fitted. After each section is laid, the remainder of the joint shall be filled with mortar, and a bead shall be formed around the outside of the joint with sufficient additional mortar. If mortar is not sufficiently stiff to prevent appreciable slump before setting, the outside of the joint shall be wrapped or bandaged with cheesecloth to hold mortar in place.

3.4.1.2 Cement-Mortar Oakum Joint for Bell-and-Spigot Pipe

A closely twisted gasket shall be made of jute or oakum of the diameter required to support the spigot end of the pipe at the proper grade and to make the joint concentric. Joint packing shall be in one piece of sufficient length to pass around the pipe and lap at top. This gasket

shall be thoroughly saturated with neat cement grout. The bell of the pipe shall be thoroughly cleaned with a wet brush, and the gasket shall be laid in the bell for the lower third of the circumference and covered with mortar. The spigot of the pipe shall be thoroughly cleaned with a wet brush, inserted in the bell, and carefully driven home. A small amount of mortar shall be inserted in the annular space for the upper two-thirds of the circumference. The gasket then shall be lapped at the top of the pipe and driven home in the annular space with a caulking tool. The remainder of the annular space then shall be filled completely with mortar and beveled at an angle of approximately 45 degrees with the outside of the bell. If mortar is not sufficiently stiff to prevent appreciable slump before setting, the outside of the joint thus made shall be wrapped with cheesecloth. Placing of this type of joint shall be kept at least five joints behind laying operations.

3.4.1.3 Cement-Mortar Diaper Joint for Bell-and-Spigot Pipe

The pipe shall be centered so that the annular space is uniform. The annular space shall be caulked with jute or oakum. Before caulking, the inside of the bell and the outside of the spigot shall be cleaned.

a. Diaper Bands: Diaper bands shall consist of heavy cloth fabric to hold grout in place at joints and shall be cut in such lengths that they will extend one-eighth of the circumference of pipe above the spring line on one side of the pipe and up to the spring line on the other side of the pipe. Longitudinal edges of fabric bands shall be rolled and stitched around two pieces of wire. Width of fabric bands shall be such that after fabric has been securely stitched around both edges on wires, the wires will be uniformly spaced not less than 8 inches apart. Wires shall be cut into lengths to pass around pipe with sufficient extra length for the ends to be twisted at top of pipe to hold the band securely in place; bands shall be accurately centered around lower portion of joint.

b. Grout: Grout shall be poured between band and pipe from only the high side of band, until grout rises to the top of band at the spring line of pipe, or as nearly so as possible, on the opposite side of pipe, to ensure a thorough sealing of joint around the portion of pipe covered by the band. Silt, slush, water, or polluted mortar grout forced up on the lower side shall be carefully forced out by pouring and removed.

c. Remainder of Joint: The remaining unfilled upper portion of the joint shall then be filled with mortar and a bead formed around the outside of this upper portion of the joint with a sufficient amount of additional mortar. The diaper shall be left in place. Placing of this type of joint shall be kept at least five joints behind actual laying of pipe. No backfilling around joints shall be done until joints have been fully inspected and approved.

3.4.1.4 Cement-Mortar Tongue-and-Groove Joint

The first pipe shall be bedded carefully to the established gradeline with the groove upstream. A shallow excavation shall be made underneath the pipe at the joint and filled with mortar to provide a bed for the pipe. The grooved end of the first pipe shall be carefully cleaned with a wet brush, and a layer of soft mortar applied to the lower half of the groove. The tongue of the second pipe shall be cleaned carefully with a wet brush;

while in horizontal position, a layer of soft mortar shall be applied to the upper half of the tongue. The tongue end of the second pipe then shall be inserted in the grooved end of the first pipe until mortar is squeezed out on interior and exterior surfaces. Sufficient mortar shall be used to fill the joint completely and to form a bead on the outside.

3.4.1.5 Cement-Mortar Diaper Joint for Tongue-and-Groove Pipe

The joint shall be of the type described for cement-mortar tongue-and-groove joint in this paragraph, except that the shallow excavation directly beneath the joint shall not be filled with mortar until after a gauze or cheesecloth band dipped in cement mortar has been wrapped around the outside of the joint. The cement-mortar bead at the joint shall be at least 1/2 inch, thick and the width of the diaper band shall be at least 8 inches. The diaper shall be left in place. Placing of this type of joint shall be kept at least five joints behind the actual laying of the pipe. No backfilling around the joints shall be done until the joints have been fully inspected and approved.

3.4.1.6 Plastic Sealing Compound Joints for Tongue-and-Grooved Pipe

Sealing compounds shall follow the recommendation of the particular manufacturer in regard to special installation requirements. Surfaces to receive lubricants, primers, or adhesives shall be dry and clean. Sealing compounds shall be affixed to the pipe not more than 3 hours prior to installation of the pipe, and shall be protected from the sun, blowing dust, and other deleterious agents at all times. Sealing compounds shall be inspected before installation of the pipe, and any loose or improperly affixed sealing compound shall be removed and replaced. The pipe shall be aligned with the previously installed pipe, and the joint pulled together. If, while making the joint with mastic-type sealant, a slight protrusion of the material is not visible along the entire inner and outer circumference of the joint when the joint is pulled up, the pipe shall be removed and the joint remade. After the joint is made, all inner protrusions will be cut off flush with the inner surface of the pipe. If nonmastic-type sealant material is used, the "Squeeze-Out" requirement above shall be waived.

3.4.1.7 Flexible Watertight Joints

Gaskets and jointing materials shall be as recommended by the particular manufacturer in regard to use of lubricants, cements, adhesives, and other special installation requirements. Surfaces to receive lubricants, cements, or adhesives shall be clean and dry. Gaskets and jointing materials shall be affixed to the pipe not more than 24 hours prior to the installation of the pipe, and shall be protected from the sun, blowing dust, and other deleterious agents at all times. Gaskets and jointing materials shall be inspected before installing the pipe; any loose or improperly affixed gaskets and jointing materials shall be removed and replaced. The pipe shall be aligned with the previously installed pipe, and the joint pushed home. If, while the joint is being made the gasket becomes visibly dislocated the pipe shall be removed and the joint remade.

3.5 DRAINAGE STRUCTURES

3.5.1 Manholes and Inlets

Construction shall be of reinforced concrete or precast reinforced concrete complete with frames and covers or gratings.

3.6 BACKFILLING

3.6.1 Backfilling Pipe in Trenches

After the pipe has been properly bedded, selected material from excavation or borrow, at a moisture content that will facilitate compaction, shall be placed along both sides of pipe in layers not exceeding 6 inches in compacted depth. The backfill shall be brought up evenly on both sides of pipe for the full length of pipe. Care shall be taken to ensure thorough compaction of the fill under the haunches of the pipe. Each layer shall be thoroughly compacted with mechanical tampers or rammers. This method of filling and compacting shall continue until the fill has reached an elevation of at least 12 inches above the top of the pipe. The remainder of the trench shall be backfilled and compacted by spreading and rolling or compacted by mechanical rammers or tampers in layers not exceeding 8 inches. Tests for density will be made as necessary to ensure conformance to the compaction requirements specified elsewhere in this paragraph. Where it is necessary in the opinion of the Contracting Officer, any sheeting or portions of bracing used shall be left in place and the contract will be adjusted accordingly. Untreated sheeting shall not be left in place beneath structures or pavements.

3.6.2 Movement of Construction Machinery

In compacting by rolling or operating heavy equipment parallel with the pipe, displacement of or injury to the pipe shall be avoided. Movement of construction machinery over a storm drain at any stage of construction shall be at the Contractor's risk. Any damaged pipe shall be repaired or replaced.

3.6.3 Compaction

Compaction shall be accomplished per the applicable paragraphs of Section 02222 EXCAVATION, TRENCHING AND BACKFILLING FOR UTILITIES SYSTEMS.

-- End of Section --

SECTION TABLE OF CONTENTS

DIVISION 02 - SITE WORK

SECTION 02730

SANITARY SEWERS

06/92

PART 1 GENERAL

1.1 REFERENCES
1.2 GENERAL REQUIREMENTS

PART 2 PRODUCTS

2.1 PIPE
2.1.1 PVC Pipe
2.1.2 High Density Polyethylene Pipe
2.1.3 Reinforced Plastic Mortar Pipe (RPMP)
2.1.4 Reinforced Thermosetting Resin Pipe (RTRP)
2.1.4.1 Filament Wound RTRP-I
2.1.4.2 Centrifugally Cast RTRP-II
2.2 FITTINGS
2.2.1 PVC Pipe
2.2.2 High Density Polyethylene Pipe
2.3 RPMP
2.4 RTRP
2.5 JOINTS
2.5.1 Plastic Pipe
2.5.1.1 High Density Polyethylene Pipe
2.5.2 RPMP
2.5.3 RTRP
2.6 BRANCH CONNECTIONS
2.7 FRAMES AND COVERS
2.8 CONCRETE
2.8.1 Portland Cement
2.8.2 Portland Cement Concrete

PART 3 EXECUTION

3.1 INSTALLATION
3.1.1 Adjacent Facilities
3.1.1.1 Water Lines
3.1.2 Pipe Laying
3.1.2.1 Trenches
3.1.2.2 Backfill
3.1.2.3 Width of Trench
3.1.2.4 Joints
3.1.2.5 Handling and Storage
3.2 CONCRETE ENCASEMENT

3.3 WYE BRANCHES
3.4 BUILDING CONNECTIONS
3.5 CLEANOUTS AND OTHER APPURTENANCES

-- End of Section Table of Contents --

SECTION 02730

SANITARY SEWERS
06/92

PART 1 GENERAL

1.1 REFERENCES

The publications listed below form a part of this specification to the extent referenced. The publications are referred to in the text by basic designation only.

AMERICAN SOCIETY FOR TESTING AND MATERIALS (ASTM)

ASTM A 48	(1994a) Gray Iron Castings
ASTM C 94	(1994) Ready-Mixed Concrete
ASTM C 150	(1994) Portland Cement
ASTM C 443	(1994) Joints for Circular Concrete Sewer and Culvert Pipe, Using Rubber Gaskets
ASTM D 1784	(1992) Rigid Poly(Vinyl Chloride) (PVC) Compounds and Chlorinated Poly(Vinyl Chloride) (CPVC) Compounds
ASTM D 2996	(1988) Filament-Wound "Fiberglass" (Glass-Fiber-Reinforced Thermosetting-Resin) Pipe
ASTM D 2997	(1990) Centrifugally Cast "Fiberglass" (Glass-Fiber-Reinforced-Thermosetting-Resin) Pipe
ASTM D 3034	(1994) Type PSM Poly(Vinyl Chloride) (PVC) Sewer Pipe and Fittings
ASTM D 3212	(1992) Joints for Drain and Sewer Plastic Pipes Using Flexible Elastomeric Seals
ASTM D 3262	(1993) "Fiberglass" (Glass-Fiber-Reinforced Thermosetting-Resin) Sewer Pipe
ASTM D 3350	(1993) Polyethylene Plastics Pipe and Fittings Materials
ASTM D 3840	(1988) "Fiberglass" (Glass-Fiber-Reinforced Thermosetting-Resin) Pipe Fittings for Nonpressure Applications
ASTM F 402	(1993) Safe Handling of Solvent Cements, Primers, and Cleaners Used for Joining

	Thermoplastic Pipe and Fittings
ASTM F 477	(1993) Elastomeric Seals (Gaskets) for Joining Plastic Pipe
ASTM F 714	(1994) Polyethylene (PE) Plastic pipe (SDR-PR) Based on Outside Diameter
ASTM F 894	(1994a) Polyethylene (PE) Large Diameter Profile Wall Sewer and Drain Pipe

NATIONAL FIRE PROTECTION ASSOCIATION (NFPA)

NFPA 49	(1991) Hazardous Chemicals Data
NFPA 325M	(1991) Fire Hazard Properties of Flammable Liquids, Gases, and Volatile Solids
NFPA 704	(1990) Identification of the Fire Hazards of Materials

1.2 GENERAL REQUIREMENTS

The construction required herein shall include appurtenant structures and building sewers to points of connection with the building drains 5 feet outside the building to which the sewer system is to be connected. The Contractor shall replace damaged material and redo unacceptable work at no additional cost to the Government. Excavation and backfilling is specified in Section 02222 EXCAVATION, TRENCHING, AND BACKFILLING FOR UTILITIES SYSTEMS. Backfilling shall be accomplished after inspection by the Contracting Officer. Before, during, and after installation, plastic pipe and fittings shall be protected from any environment that would result in damage or deterioration to the material. The Contractor shall have a copy of the manufacturer's instructions available at the construction site at all times and shall follow these instructions unless directed otherwise by the Contracting Officer. Solvents, solvent compounds, lubricants, elastomeric gaskets, and any similar materials required to install the plastic pipe shall be stored in accordance with the manufacturer's recommendation and shall be discarded if the storage period exceeds the recommended shelf life. Solvents in use shall be discarded when the recommended pot life is exceeded.

PART 2 PRODUCTS

2.1 PIPE

Pipe shall conform to the respective specifications and other requirements specified below.

2.1.1 PVC Pipe

ASTM D 3034, Type PSM with a maximum SDR of 35. PVC shall be certified by the compounder as meeting the requirements of ASTM D 1784, cell Class 12454B. The pipe stiffness shall be greater than or equal to 735/D for cohesionless material pipe trench backfills.

2.1.2 High Density Polyethylene Pipe

ASTM F 714. The polyethylene shall be certified by the resin producer as

meeting the requirements of ASTM D 3350, cell Class 334433C. The pipe stiffness shall be greater than or equal to 1170/D for cohesionless material pipe trench backfills.

2.1.3 Reinforced Plastic Mortar Pipe (RPMP)

ASTM D 3262.

2.1.4 Reinforced Thermosetting Resin Pipe (RTRP)

ASTM D 3262.

2.1.4.1 Filament Wound RTRP-I

RTRP-I shall conform to ASTM D 2996, except pipe shall have an outside diameter equal to cast iron outside diameter or standard weight steel pipe. The pipe shall be suitable for a normal working pressure of 150 psi at 73 degrees F. The inner surface of the pipe shall have a smooth uniform continuous resin-rich surface liner conforming to ASTM D 2996.

2.1.4.2 Centrifugally Cast RTRP-II

RTRP-II shall conform to ASTM D 2997. Pipe shall have an outside diameter equal to standard weight steel pipe.

2.2 FITTINGS

Fittings shall be compatible with the pipe supplied and shall have a strength not less than that of the pipe. Fittings shall conform to the respective specifications and other requirements specified below.

2.2.1 PVC Pipe

ASTM D 3034 for type PSM pipe.

2.2.2 High Density Polyethylene Pipe

ASTM F 894.

2.3 RPMP

ASTM D 3840.

2.4 RTRP

ASTM D 3262.

2.5 JOINTS

Joints installation shall comply with the manufacturer's instructions.

2.5.1 Plastic Pipe

Flexible plastic pipe (PVC or high density polyethylene pipe) gasketed joints shall conform to ASTM D 3212.

2.5.1.1 High Density Polyethylene Pipe

Rubber gasket joints shall conform to ASTM C 443.

2.5.2 RPMP

Joints shall be bell and spigot type utilizing an elastomeric gasket in accordance with ASTM F 477.

2.5.3 RTRP

Joints shall be bell and spigot type utilizing an elastomeric gasket in accordance with ASTM F 477.

2.6 BRANCH CONNECTIONS

Branch connections shall be made by use of regular fittings.

2.7 FRAMES AND COVERS

Frames and covers shall be cast iron or ductile iron. Cast iron frames and covers for cleanouts shall conform to ASTM A 48. The word "Sewer" shall be stamped or cast into covers so that it is plainly visible.

2.8 CONCRETE

2.8.1 Portland Cement

Portland cement shall conform to ASTM C 150, optional with the Contractor for cement used in concrete cradle and concrete encasement.

2.8.2 Portland Cement Concrete

Portland cement concrete shall conform to ASTM C 94, compressive strength of 4000 psi at 28 days, except for concrete cradle and encasement. Concrete used for cradle and encasement shall have a compressive strength of 2500 psi minimum at 28 days. Concrete in place shall be protected from freezing and moisture loss for 7 days.

PART 3 EXECUTION

3.1 INSTALLATION

3.1.1 Adjacent Facilities

3.1.1.1 Water Lines

Where the location of the sewer is not clearly defined by dimensions on the drawings, the sewer shall not be closer horizontally than 10 feet to a water-supply main or service line, except that where the bottom of the water pipe will be at least 12 inches above the top of the sewer pipe, the horizontal spacing may be a minimum of 6 feet. Where gravity-flow sewers cross above water lines, the sewer pipe for a distance of 10 feet on each side of the crossing shall be fully encased in concrete or shall be acceptable pressure pipe with no joint closer horizontally than 3 feet to the crossing. The thickness of the concrete encasement including that at the pipe joints shall be not less than 4 inches.

3.1.2 Pipe Laying

a. Pipe shall be protected during handling against impact shocks and free fall and the pipe interior shall be free of extraneous

material.

b. Pipe laying shall proceed upgrade with the spigot ends of bell-and-spigot pipe and tongue ends of tongue-and-groove pipe pointing in the direction of the flow. Each pipe shall be laid accurately to the line and grade shown on the drawings. Pipe shall be laid and centered so that the sewer has a uniform invert. As the work progresses, the interior of the sewer shall be cleared of all superfluous materials.

c. Before making pipe joints all surfaces of the portions of the pipe to be joined shall be clean and dry. Lubricants, primers, and adhesives shall be used as recommended by the pipe manufacturer. The joints shall then be placed, fitted, joined, and adjusted to obtain the degree of water tightness required.

d. Installations of solvent weld joint pipe, using PVC pipe and fittings shall be in accordance with ASTM F 402. All required precautions shall be taken to assure adequate trench ventilation and protection for workers installing the pipe.

3.1.2.1 Trenches

Trenches shall be kept free of water and as dry as possible during bedding, laying, and jointing and for as long a period as required. When work is not in progress, open ends of pipe and fittings shall be satisfactorily closed so that no trench water or other material will enter the pipe or fittings.

3.1.2.2 Backfill

As soon as possible after the joint is made, sufficient backfill material shall be placed along the pipe to prevent pipe movement off line or grade. Plastic pipe shall be completely covered to prevent damage from ultraviolet light.

3.1.2.3 Width of Trench

If the maximum width of the trench at the top of the pipe, as specified in Section 02222 EXCAVATION, TRENCHING, AND BACKFILLING FOR UTILITIES SYSTEMS, is exceeded for any reason other than by direction, the Contractor shall install at no additional cost to the Government such concrete cradling, pipe encasement, or other bedding required to support the added load of the backfill.

3.1.2.4 Joints

Joints between different pipe materials shall be made as specified, using approved jointing materials.

3.1.2.5 Handling and Storage

Pipe, fittings and joint material shall be handled and stored in accordance with the manufacturer's recommendations. Storage facilities for plastic pipe, fittings, joint materials and solvents shall be classified and marked in accordance with NFPA 704, with classification as indicated in NFPA 49 and NFPA 325M.

3.2 CONCRETE ENCASEMENT

The pipe shall be encased in concrete where indicated or directed.

3.3 WYE BRANCHES

Wye branches shall be installed where sewer connections are indicated or where directed. The pipe shall be supported on a concrete cradle as indicated. Concrete required because of conditions resulting from faulty construction methods or negligence by the Contractor shall be installed at no additional cost to the Government.

3.4 BUILDING CONNECTIONS

Building connections shall include the lines to and connection with the building waste drainage piping at a point approximately 5 feet outside the building, unless otherwise indicated. Where building drain piping is not installed, the Contractor shall terminate the building connections approximately 5 feet from the site of the building at a point and in a manner designated.

3.5 CLEANOUTS AND OTHER APPURTENANCES

Cleanouts and other appurtenances shall be installed where shown on the drawings or as directed by the Contracting Officer, and shall conform to the detail of the drawings.

-- End of Section --

SECTION TABLE OF CONTENTS

DIVISION 02 - SITE WORK

SECTION 02811

IRRIGATION SYSTEMS

11/90

PART 1 GENERAL

1.1 REFERENCES
1.2 PERFORMANCE REQUIREMENTS
1.2.1 Irrigation System Design
1.3 SUBMITTALS
1.4 DELIVERY AND STORAGE
1.5 FIELD MEASUREMENTS
1.6 PROTECTION OF EXISTING CONDITIONS

PART 2 PRODUCTS

2.1 GENERAL MATERIALS AND EQUIPMENT REQUIREMENTS
2.1.1 Standard Products
2.1.2 Nameplates
2.1.3 Extra Stock
2.2 PIPING MATERIALS
2.2.1 Polyvinyl Chloride (PVC) Pipe, Fittings and Solvent Cement
2.2.1.1 Pipe
2.2.1.2 Fittings
2.2.1.3 Solvent Cement
2.2.2 Polyethylene (PE) Plastic Piping
2.2.2.1 Pipe
2.2.2.2 Fittings
2.3 SPRINKLER AND EMITTER HEADS
2.3.1 Pop-Up Spray Heads
2.3.2 Rotary Pop-Up Sprinklers
2.4 VALVES
2.4.1 Gate Valves, Less than 3 Inches
2.4.2 Quick Coupling Valves
2.4.3 Remote Control Valves, Electrical
2.4.4 Drain Valves
2.4.4.1 Manual Valves
2.4.4.2 Automatic Valves
2.4.5 Backflow Preventers
2.5 ACCESSORIES AND APPURTENANCES
2.5.1 Valve Keys for Manually Operated Valves
2.5.2 Valve Boxes and Concrete Pads
2.5.2.1 Valve Boxes
2.6 AUTOMATIC CONTROLLERS, ELECTRICAL
2.7 ELECTRICAL WORK
2.8 CONCRETE MATERIALS
2.9 WATER SUPPLY

PART 3 EXECUTION

3.1 EXISTING IRRIGATION SYSTEM
3.1.1 Modification to Existing Steam
3.2 INSTALLATION
3.2.1 Trenching
3.2.2 Piping System
3.2.2.1 Cover
3.2.2.2 Clearances
3.2.2.3 Minimum Slope
3.2.3 Piping Installation
3.2.3.1 Polyvinyl Chloride (PVC) Pipe
3.2.4 Valves
3.2.4.1 Manual Valves
3.2.4.2 Automatic Valves
3.2.4.3 Drain Valves
3.2.5 Irrigation and Quick Coupling Valves
3.2.6 Control Wire and Conduit
3.2.6.1 Wires
3.2.6.2 Loops
3.2.6.3 Expansion and Contraction
3.2.6.4 Splices
3.2.7 Automatic Controller
3.2.8 Thrust Blocks
3.2.9 Backfill
3.2.9.1 Minimum Cover
3.2.9.2 Restoration
3.2.10 Adjustment
3.2.11 Disinfection
3.2.12 Cleaning of Piping
3.3 FIELD TESTS
3.3.1 Hydrostatic Pressure Test
3.3.2 Leakage Tests
3.3.3 Operation Test
3.4 POSTING FRAMED INSTRUCTIONS
3.5 FIELD TRAINING
3.6 CLEANUP

-- End of Section Table of Contents --

SECTION 02811

IRRIGATION SYSTEMS

11/90

PART 1 GENERAL

1.1 REFERENCES

The publications listed below form a part of this specification to the extent referenced. The publications are referred to in the text by the basic designation only.

AMERICAN SOCIETY FOR TESTING AND MATERIALS (ASTM)

ASTM D 1785	(1991) Poly(Vinyl Chloride) (PVC) Plastic Pipe, Schedules 40, 80, and 120
ASTM D 2564	(1991a) Solvent Cements for Poly(Vinyl Chloride) (PVC) Plastic Piping Systems
ASTM D 2774	(1972; R 1983) Underground Installation of Thermoplastic Pressure Piping
ASTM D 2855	(1990) Making Solvent-Cemented Joints with Poly(Vinyl Chloride) (PVC) Pipe and Fittings
ASTM D 3261	(1990) Butt Heat Fusion Polyethylene (PE) Plastic Fittings for Polyethylene (PE) Plastic Pipe and Tubing

AMERICAN WATER WORKS ASSOCIATION (AWWA)

AWWA C901	(1988; Errata 1988) Polyethylene (PE) Pressure Pipe and Tubing, 1/2 In. Through 3 In., for Water Service

FEDERAL SPECIFICATIONS (FS)

FS WW-H-001220	(Basic) Head, Sprinkler, (Underground Connected)

MANUFACTURERS STANDARDIZATION SOCIETY OF THE VALVE AND FITTINGS INDUSTRY (MSS)

MSS SP-85	(1985) Cast Iron Globe & Angle Valves Flanged and Threaded Ends

NATIONAL ELECTRICAL MANUFACTURERS ASSOCIATION (NEMA)

NEMA ICS 2	(1988; Rev 1) Industrial Control Devices, Controllers and Assemblies
NEMA ICS 6	(1988; Rev 1) Enclosures for Industrial Control and Systems

NATIONAL FIRE PROTECTION ASSOCIATION (NFPA)

NFPA 70 (1993) National Electrical Code

1.2 PERFORMANCE REQUIREMENTS

1.2.1 Irrigation System Design

Design the irrigation system to operate the existing and new irrigated areas. The new main line shall connect to the existing main line. Contact the Contracting Officer if existing irrigation system is inadequate to expand. Contractor shall verify system water pressure with Contracting Officer prior to designing system.

1.3 SUBMITTALS

Indicate submittal classification in the blank space using "GA" when the submittal requires Government approval or "FIO" when the submittal is for information only.

Government approval is required for submittals with a "GA" designation; submittals having an "FIO" designation are for information only. The following shall be submitted in accordance with Section 01300 SUBMITTAL PROCEDURES:

SD-01 Data

Framed Instructions; FIO.

Labels, signs, and templates of operating instructions that are required to be mounted or installed on or near the product for normal, safe operation.

Field Training Data; FIO.

Information describing training to be provided, training aids to be used, samples of training materials to be provided, and schedules and notification of training.

Design Analysis and Calculations; FIO. Spare Parts; FIO.

Design analyses and pressure calculations verifying that system will provide the irrigation requirements. Spare parts data for each different item of material and equipment specified, after approval of the related submittals and not later than the start of the field tests. The data shall include a complete list of parts and supplies, with current unit prices and source of supply.

SD-04 Drawings

Irrigation System; GA.

Detail drawings for valves, irrigation heads, backflow preventers, automatic controllers, emitter heads, and water hammer arresters. Drawing shall include of a complete list of equipment and materials, and manufacturer's descriptive and technical literature, performance charts and curves, catalog cuts, and installation instructions. Drawings shall also contain complete wiring and schematic diagrams and any other details required to demonstrate that the system has been coordinated and will

function as a unit. Drawings shall show proposed system layout, type and number of heads, zone valves, drain pockets, backflow devices, controllers, and mounting details of controllers. As-built Drawings which provide current factual information showing locations of mains, heads, valves, and controllers including deviations from and amendments to the drawings and changes in the work shall be included.

SD-06 Instructions

Irrigation System; FIO.

Detailed procedures defining the Contractor's provisions for accident prevention, health protection, and other safety precautions for the work to be done.

SD-09 Reports

Field Tests; FIO.

Performance test reports in booklet form showing all field tests performed to adjust each component and all field tests performed to prove compliance with the specified performance criteria, upon completion and testing of the installed system. Each test report shall indicate the final position of control valves.

SD-13 Certificates

Irrigation System; FIO.

The material supplier's or equipment manufacturer's statement that the supplied material or equipment meets specified requirements. Each certificate shall be signed by an official authorized to certify in behalf of material supplier or product manufacturer and shall identify quantity and date or dates of shipment or delivery to which the certificates apply.

SD-19 Operation and Maintenance Manuals

Irrigation System; FIO.

Six copies of operation and six copies of maintenance manuals for the equipment furnished. One complete set prior to field testing and the remainder upon acceptance. Manuals shall be approved prior to the field training course. Operating manuals shall detail the step-by-step procedures required for system startup, operation, and shutdown. Operating manuals shall include the manufacturer's name, model number, parts list, and brief description of all equipment and their basic operating features. Maintenance manuals shall list routine maintenance procedures, possible breakdowns and repairs, and troubleshooting guides. Maintenance manuals shall include piping and equipment layout, simplified wiring and control diagrams of the system as installed, and system programming schedule.

1.4 DELIVERY AND STORAGE

All equipment delivered and placed in storage shall be protected from the weather; excessive humidity and temperature variation; direct sunlight (in the case of plastic or rubber materials); and dirt, dust, or other contaminants.

1.5 FIELD MEASUREMENTS

The Contractor shall verify all dimensions in the field and shall advise the Contracting Officer of any discrepancy before performing the work.

1.6 PROTECTION OF EXISTING CONDITIONS

Any existing structure, equipment utilities, pavement irrigation system, landscaping damaged during the course of construction work, including any subsequent damage caused by leakage or settling of piping shall be restored to the Contracting Officer's satisfaction.

PART 2 PRODUCTS

2.1 GENERAL MATERIALS AND EQUIPMENT REQUIREMENTS

2.1.1 Standard Products

Materials and equipment shall be the standard products of a manufacturer who has produced similar systems which have performed well for a minimum period of 2 years prior to bid opening. Equipment shall be supported by a service organization that is, in the opinion of the Contracting Officer, reasonably convenient to the site.

2.1.2 Nameplates

Each item of equipment shall have the manufacturer's name, address, type or style, model or serial number, and catalog number on a plate secured to the item of equipment.

2.1.3 Extra Stock

The following extra stock shall be provided: Two irrigation heads of each size and type, two valve keys for operating manual valves, two wrenches for removing and installing each type of head, two quick coupler keys and hose swivels, and four irrigation controller housing keys.

2.2 PIPING MATERIALS

2.2.1 Polyvinyl Chloride (PVC) Pipe, Fittings and Solvent Cement

2.2.1.1 Pipe

Pipe shall conform to the requirements of ASTM D 1785, PVC 1120 Schedule 40 for main line and ASTM D 1785, PVC 1120 Class 200 for lateral lines.

2.2.1.2 Fittings

Solvent welded socket type fittings shall conform to requirements of ASTM D 2467, Schedule 80.

2.2.1.3 Solvent Cement

Solvent cement shall conform to the requirements of ASTM D 2564.

2.2.2 Polyethylene (PE) Plastic Piping

2.2.2.1 Pipe

Pipe shall conform to AWWA C901, outside diameter base with dimension ratio

(DR) of 9.3 to provide 150 psi minimum pressure rating.

2.2.2.2 Fittings

Fittings shall conform to ASTM D 3261, DR of 9.3.

2.3 SPRINKLER AND EMITTER HEADS

2.3.1 Pop-Up Spray Heads

Pop-up spray heads shall conform to the requirements of FS WW-H-001220, Type II, Class A, B,C and D. Nozzle rises a minimum of 4 inches above body for lawn areas and 12 inches above body for shrub bed areas.

2.3.2 Rotary Pop-Up Sprinklers

Sprinklers shall be capable of covering 35 feet diameter at 35 psi with a distribution rate of 2.0 gpm, 4 inch pop-up, trajectory of 15 percent to 25 percent. Construction shall be high impact molded plastic with filter screen, reducible watering radius, and choice of nozzles and have adjustable radius capabilities.

2.4 VALVES

2.4.1 Gate Valves, Less than 3 Inches

Gate valves shall conform to the requirements of MSS SP-85, Type II, Class 150, flanged ends.

2.4.2 Quick Coupling Valves

Quick coupling valves shall have brass parts and shall be two-piece unit consisting of a coupler water seal valve assembly and a removable upper body to allow spring and key track to be serviced without shutdown of main. Lids shall be lockable vinyl with spring for positive closure on key removal. Lid shall be labeled "nonpotable water".

2.4.3 Remote Control Valves, Electrical

Remote control valves shall be solenoid actuated globe valves of 1 to 3 inch(es) size, suitable for 24 volts, 60/50 cycle, and designed to provide for shut-off in event of power failure. Valve shall be high impact plastic housing suitable for service at 150 psi operating pressure with external flow control adjustment for shut-off capability, external plug at diaphragm chamber to enable manual operation, filter in control chamber to prevent valve body clogging with debris, durable diaphragm, and accessibility to internal parts without removing valve from system.

2.4.4 Drain Valves

2.4.4.1 Manual Valves

Manual valves shall conform to requirements of MSS SP-85, Type II, Class 250 flanged ends for sizes 2-1/2 inches and larger.

2.4.4.2 Automatic Valves

Automatic valves shall be plastic, spring loaded ball drip type, 150 pounds and threaded ends, designed to close at 6 foot pressure head with positive

seal at 3 psi pressure or greater and be open to drain at less than 3 psi pressure.

2.4.5 Backflow Preventers

Provided on existing irrigation system.

2.5 ACCESSORIES AND APPURTENANCES

2.5.1 Valve Keys for Manually Operated Valves

Valve keys shall be 1/2 inch diameter by 3 feet long, tee handles and keyed to fit valves.

2.5.2 Valve Boxes and Concrete Pads

2.5.2.1 Valve Boxes

Valve boxes shall be plastic lockable for each gate valve, manual control valve and remote control valve. Box sizes shall be adjustable for valve used. Word "IRRIGATION" shall be on cover. Shaft diameter of box shall be minimum 9 inches.

2.6 AUTOMATIC CONTROLLERS, ELECTRICAL

Controller shall conform to the requirements of NEMA ICS 2 with 120-volt single phase service, operating with indicated stations, and grounded chassis. Enclosure shall conform to NEMA ICS 6 Type 3R, with locking hinged cover, wall-mounted. Controller shall be programmed for various schedules by setting switches and dials equipped with the following features: A switch for each day of week for three schedules, allowing each station to be scheduled individually as to days of watering; a minute switch for each station with a positive increment range of 3 to 60 minutes, set time within one percent; a switch allowing selected schedules to be repeated after each completion of initial watering schedule and allowing each operation to be scheduled throughout a 24-hour day; a circuit breaker for surge protection; and circuit for a 9-volt rechargeable NiCad battery. Size the controller to accommodate existing zones, new zones and a minimum of two additional zones.

2.7 ELECTRICAL WORK

Wiring and rigid conduit for electrical power shall be in accordance with NFPA 70, and Section 16375, ELECTRICAL DISTRIBUTION SYSTEM, UNDERGROUND.

2.8 CONCRETE MATERIALS

Concrete shall have a compressive strength of 2500 psi at 28 days as specified in Section 03300, CAST-IN-PLACE STRUCTURAL CONCRETE.

2.9 WATER SUPPLY

New main line shall connect to existing irrigation main line.

PART 3 EXECUTION

3.1 EXISTING IRRIGATION SYSTEM

The layout of the existing underground irrigation shall be validated within

the project area. Items to be located include sprinkler heads, main line, remote control valves, gate valves, manual valves, backflow prevention device, quick coupler valves, automatic controller and other pertinent items.

3.1.1 Modification to Existing Steam

If the new building addition disrupts the existing main line distribution to each zone, loop new main line and control valve wires to isolated zones prior to demolition of the existing main line. The Contracting Officer shall approve the installation of new main line and control wires to insure the existing system is operable.

Zones and sprinkler heads south of the hospital addition entry walk shall be modified to accommodate new construction. Head layout shall provide 100% coverage.

3.2 INSTALLATION

Irrigation system shall be installed after site grading has been completed. Excavation, trenching, and backfilling for irrigation system shall be in accordance with the applicable provisions of Section 02222, EXCAVATION, TRENCHING, AND BACKFILLING FOR UTILITIES SYSTEMS, except as modified herein.

3.2.1 Trenching

Trench around roots shall be hand excavated to pipe grade when roots of 2 inches diameter or greater are encountered. Trench width shall be 4 inches minimum or 1-1/2 times diameter of pipe, whichever is wider. Backfill shall be hand tamped over excavation. Trenches shall be kept free of obstructions and debris that would damage pipe. Subsoil shall not be mixed with topsoil. Existing concrete walks, drives and other obstacles shall be bored at a depth conforming to bottom of adjacent trenches. Pipe sleeves for bored pipe shall be two pipe diameters larger than pipe.

3.2.2 Piping System

3.2.2.1 Cover

Underground piping shall be installed as to meet the minimum depth of backfill cover specified.

3.2.2.2 Clearances

Minimum horizontal clearances between lines shall be 4 inches for pipe 2 inches and less; 12 inches for 2-1/2 inches and larger. Minimum vertical clearances between lines shall be 1 inch.

3.2.2.3 Minimum Slope

Minimum slope shall be 6 inches per 100 feet in direction of drain valves.

3.2.3 Piping Installation

3.2.3.1 Polyvinyl Chloride (PVC) Pipe

a. Solvent-cemented joints shall conform to the requirements of ASTM D 2855.

b. Piping shall be joined to conform with requirements of ASTM D 2774 or ASTM D 2855, and pipe manufacturer's instructions. Pipe shall be installed in a serpentine (snaked) manner to allow for expansion and contraction in trench before backfilling. Pipes shall be installed at temperatures over 40 degrees F.

3.2.4 Valves

3.2.4.1 Manual Valves

Valves shall be installed in a valve box extending from grade to below valve body, with a minimum of 4 inches cover measured from finish grade to top of valve stem.

3.2.4.2 Automatic Valves

Valve shall be set plumb in a valve box extending from grade to below valve body, with minimum of 4 inch cover measured from grade to top of valve. Install automatic valves beside sprinkler heads with a valve box.

3.2.4.3 Drain Valves

Entire system shall be manually or automatically drainable. Low points of system shall be equipped with drain valve draining into an excavation containing 1 cubic foot gravel. Gravel shall be covered with building paper then backfilled with excavated material and 6 inches of topsoil.

3.2.5 Irrigation and Quick Coupling Valves

Irrigation and valves shall be installed plumb and level with terrain.

3.2.6 Control Wire and Conduit

3.2.6.1 Wires

Low voltage wires may be buried beside pipe in same trench. Rigid conduit shall be provided where wires run under paving. Wires shall be number tagged at key locations along main to facilitate service. One control circuit shall be provided for each zone and a circuit to control irrigation system.

3.2.6.2 Loops

A 12 inch loop of wire shall be provided at each valve where controls are connected.

3.2.6.3 Expansion and Contraction

Multiple tubes or wires shall be bundled and taped together at 10 foot intervals with 12 inch loop for expansion and contraction.

3.2.6.4 Splices

No intermediate splices are allowed between valve and controller.

3.2.7 Automatic Controller

If a new controller is required, install at existing controller location. Exact field location of controllers shall be determined before

installation. Coordinate the electrical service to these locations. Install in accordance with manufacturer's recommendations and NFPA 70.

3.2.8 Thrust Blocks

Concrete shall be placed so that sides subject to thrust or load are against undisturbed earth, and valves and fittings are serviceable after concrete has set. Thrust blocks shall be as specified in Section 02660, WATER LINES.

3.2.9 Backfill

3.2.9.1 Minimum Cover

Depth of cover for laterals shall be 12 inches. Depth of cover for main lines shall be 24 inches; and 18 inches for low-voltage wires. Remainder of trench or pipe cover shall be filled to within 3 inches of top with excavated soil, and compact soil with plate hand-held compactors to same density as undisturbed adjacent soil.

3.2.9.2 Restoration

Top 3 inches shall be filled with topsoil and compacted with same density as surrounding soil. Lawns and plants shall be restored in accordance with Section 02935, TURF, and Section 02950, TREES, SHRUBS AND GROUND COVERS.

3.2.10 Adjustment

After grading, sodding, and rolling of planted areas, irrigation heads shall be adjusted flush with finished grade. Adjustments shall be made by providing new nipples of proper length or by use of heads having an approved device, integral with head, which will permit adjustment in height of head without changing piping.

3.2.11 Disinfection

Irrigation system fed from a potable water system shall be disinfected upstream of backflow preventer in accordance with Section 02660, WATER LINES.

3.2.12 Cleaning of Piping

Prior to the hydrostatic and operation tests, the interior of the pipe shall be flushed with clean water until pipe is free of all foreign materials. Flushing and cleaning out of system pipe, valves, and components shall not be considered completed until witnessed and accepted by Contracting Officer.

3.3 FIELD TESTS

All instruments, equipment, facilities, and labor required to conduct the tests shall be provided by Contractor.

3.3.1 Hydrostatic Pressure Test

Piping shall be tested hydrostatically before backfilling and proved tight at a hydrostatic pressure of 150 psi without pumping for a period of one hour with an allowable pressure drop of 5 psi. If hydrostatic pressure cannot be held for a minimum of 4 hours, Contractor shall make adjustments

or replacements and the tests repeated until satisfactory results are achieved and accepted by the Contracting Officer.

3.3.2 Leakage Tests

Leakage tests for service main shall be in accordance with Section 02660, WATER LINES.

3.3.3 Operation Test

At conclusion of pressure test, irrigation heads, quick coupling assemblies, and hose valves shall be installed and entire system tested for operation under normal operating pressure. Operation test consists of the system operating through at least one complete programmed cycle for all areas to be sprinkled.

3.4 POSTING FRAMED INSTRUCTIONS

Framed instructions containing wiring and control diagrams under glass or in laminated plastic shall be posted where directed. Condensed operating instructions, prepared in typed form, shall be framed as specified above and posted beside the diagrams. The framed instructions shall be posted before acceptance testing of the system. After as-built drawings are approved by Contracting Officer, controller charts and programming schedule shall be prepared. One chart for each controller shall be supplied. Chart shall be a reduced drawing of actual as-built system that will fit the maximum dimensions inside controller housing. Black line print for chart and a different pastel or transparent color shall indicate each station area of coverage. After chart is completed and approved for final acceptance, chart shall be sealed between two 20 mil pieces of clear plastic.

3.5 FIELD TRAINING

A field training course shall be provided for designated operating, winterization and maintenance staff members. Training shall be provided for a total period of 8 hours of normal working time and shall start after the system is functionally complete but prior to final acceptance tests. Field training shall cover all of the items contained in the operating and maintenance manuals.

3.6 CLEANUP

Upon completion of installation of system, all debris and surplus materials resulting from the work shall be removed.

-- End of Section --

SECTION TABLE OF CONTENTS

DIVISION 02 - SITE WORK

SECTION 02870

SITE FURNISHINGS

PART 1 GENERAL

1.1 STANDARD PRODUCTS
1.2 GENERAL REQUIREMENTS
1.3 SUBMITTALS

PART 2 PRODUCTS

2.1 GENERAL
2.2 MODULAR CONCRETE BENCH
2.2.1 Seating Finish - LSB Sides and Underneath
2.3 MODULAR CONCRETE LITTER RECEPTACLE

PART 3 EXECUTION

3.1 INSTALLATION

-- End of Section Table of Contents --

SECTION 02870

SITE FURNISHINGS

PART 1 GENERAL

1.1 STANDARD PRODUCTS

Materials and equipment shall be the standard products of a manufacturer regularly engaged in the manufacture of such products and shall essentially duplicate items that have been in satisfactory use for at least 5 years prior to bid opening.

1.2 GENERAL REQUIREMENTS

Supplementary parts necessary to complete each item shall be included even though such work is not shown definitely or specified. The Contractor shall furnish to the proper trades, all anchors, sockets, or fastenings required for securing items to other construction. Details and specifications of items for which standard products are available, are representative guides of requirements for such items. Standard products, generally meeting such requirements, will be accepted, if details of construction and installation are approved by the Contracting Officer.

1.3 SUBMITTALS

SD-04 Drawings

Shop drawings showing sizes, details of construction, method of construction, method of assembling, hardware materials, colors, method of mounting, location of each item, installation of items, and other details shall be submitted for approval in accordance with the requirements of the SECTION 01300 - SUBMITTAL DESCRIPTIONS for all items specified herein. Materials fabricated or delivered to the job site before approval of the shop drawings shall be subject to rejection.

PART 2 PRODUCTS

2.1 GENERAL

Site furnishings shall be constructed of precast concrete. Units shall be shop fabricated and finished.

2.2 MODULAR CONCRETE BENCH

Modular concrete bench shall be manufactured by Dura Art Stone, Newark, California or an approved equal by the Contracting Officer. The bench appearance shall be as represented by Dura Art Stone Model No. S-6A-E-S-9-AE.

2.2.1 Seating Finish - LSB Sides and Underneath

The bench color may vary from tan to brown, matching the architecture as approved by the Contracting Officer. Bench shall be freestanding.

2.3 MODULAR CONCRETE LITTER RECEPTACLE

The litter receptacle shall be similar in appearance as manufactured by Dura Art Stone, Newark, California Model No. S-TR-D-59-LSB-ST/Open/1-Bronze or approved equal. The litter receptacle shall:

a. be approximately 36 inches in height;

b. be 22 inches in diameter;

c. be rustic brown in color;

d. have a light sandblast finish; and

e. have a bronze ash urn lid with litter receptacle opening on the side with a 15 gallon liner.

PART 3 EXECUTION

3.1 INSTALLATION

Installation of site furnishings shall be as shown on the drawings and in accordance with manufacturer's written instructions.

-- End of Section --

SECTION TABLE OF CONTENTS

DIVISION 02 - SITE WORK

SECTION 02935

TURF

06/90

PART 1 GENERAL

1.1 REFERENCES
1.2 SUBMITTALS
1.3 SOURCE INSPECTIONS
1.4 DELIVERY, INSPECTION, STORAGE, AND HANDLING
1.4.1 Delivery
1.4.1.1 Protection
1.4.1.2 Topsoil
1.4.1.3 Soil Amendments
1.4.1.4 Pesticide
1.4.2 Inspection
1.4.3 Storage
1.4.4 Handling
1.4.4.1 Materials
1.4.4.2 Time Limitation

PART 2 PRODUCTS

2.1 MATERIALS
2.1.1 Sod
2.1.1.1 Sod Classification
2.1.1.2 Grass Species
2.1.1.3 Quality
2.1.1.4 Thickness
2.1.1.5 Anchors
2.1.2 Soil Amendments
2.1.2.1 Lime
2.1.2.2 Fertilizer
2.1.2.3 Organic Soil Amendments
2.1.2.4 Soil Conditioner
2.1.3 Water
2.1.4 Pesticide

PART 3 EXECUTION

3.1 SODDING TIMES AND CONDITIONS
3.1.1 Sodding Time
3.1.2 Turfing Conditions
3.2 SITE PREPARATION
3.2.1 Grading
3.2.2 Application of Soil Amendments
3.2.2.1 Soil Test
3.2.2.2 Fertilizer
3.2.3 Tillage
3.2.3.1 Minimum Depth

3.2.4 Finished Grading
3.2.4.1 Preparation
3.2.4.2 Lawn Area Debris
3.2.4.3 Field Area Debris
3.2.4.4 Protection
3.3 SODDING
3.3.1 General
3.3.2 Placing Sod
3.3.3 Finishing
3.3.4 Watering Sod
3.3.5 Temporary Turf Cover
3.3.5.1 General
3.3.5.2 Application
3.4 APPLICATION OF PESTICIDE
3.5 RESTORATION AND CLEAN UP
3.5.1 Restoration
3.5.2 Clean Up
3.6 PROTECTION OF TURFED AREAS
3.7 TURF ESTABLISHMENT PERIOD
3.7.1 Commencement
3.7.2 Satisfactory Stand of Turf
3.7.2.1 Sodded Area
3.7.3 Maintenance During Establishment Period
3.7.3.1 General
3.7.3.2 Mowing
3.7.3.3 Watering
3.7.3.4 Post-Fertilization
3.7.3.5 Pesticide
3.7.3.6 Repair
3.7.3.7 Maintenance Report
3.8 FINAL ACCEPTANCE
3.8.1 Preliminary Inspection
3.8.2 Final Inspection

-- End of Section Table of Contents --

SECTION 02935
TURF
06/90

PART 1 GENERAL

1.1 REFERENCES

The publications listed below form a part of this specification to the extent referenced. The publications are referred to in the text by basic designation only.

AMERICAN SOCIETY FOR TESTING AND MATERIALS (ASTM)

ASTM D 2607	(1969) Peats, Mosses, Humus, and Related Products

COMMERCIAL ITEM DESCRIPTIONS (CID)

CID A-A-1909	(Basic; Notice 1) Fertilizer

1.2 SUBMITTALS

Government approval is required for submittals with a "GA" designation; submittals having an "FIO" designation are for information only. The following shall be submitted in accordance with Section 01300 SUBMITTAL PROCEDURES:

SD-07 Schedules

Equipment List; FIO.

A list of proposed pesticide application, equipment to be used in performance of turfing operation, including descriptive data and calibration tests.

SD-08 Statements

Delivery; FIO.

Delivery schedule, at least 10 days prior to the intended date of the first delivery.

Application of Pesticide; FIO.

Pesticide treatment plan with proposed sequence of pesticide treatment work. The pesticide trade name, chemical composition, formulation, concentration, application rate of active ingredients and method of application for all materials; and the name and state license number of the state certified applicator shall be included.

Maintenance Report; FIO.

Written record of maintenance work performed.

Turf Establishment Period; FIO.

Written calendar time period for the turf establishment period. When there is more than one turf establishment period, the boundaries of the turfed area covered for each period shall be described.

SD-13 Certificates

Certificates of compliance certifying that materials meet the requirements specified, prior to the delivery of materials. Certified copies of the reports for the following materials shall be included:

Sod; FIO.

For species, mixture percentage, percent purity, field location.

Fertilizer; FIO.

For chemical analysis, composition percent.

Agricultural Limestone; FIO.

For calcium carbonate equivalent and sieve analysis.

Peat; FIO.

For compliance with ASTM D 2607.

Pesticide Material; FIO.

For EPA registration number and registered uses.

Topsoil; FIO.

For pH, particle size, chemical analysis and mechanical analysis.

1.3 SOURCE INSPECTIONS

Sod material will be subject to inspection by the Contracting Officer at the growing site.

1.4 DELIVERY, INSPECTION, STORAGE, AND HANDLING

1.4.1 Delivery

1.4.1.1 Protection

Sod shall be protected from drying out and contamination during delivery.

1.4.1.2 Topsoil

A soil test shall be provided for topsoil delivered to the site.

1.4.1.3 Soil Amendments

Soil amendments shall be delivered to the site in the original, unopened containers bearing the manufacturer's chemical analysis. In lieu of containers, soil amendments may be furnished in bulk. A chemical analysis shall be provided for bulk deliveries.

1.4.1.4 Pesticide

Pesticide material shall be delivered to the site in the original, unopened containers bearing legible labels indicating the Environmental Protection Agency (EPA) registration number and the manufacturer's registered uses.

1.4.2 Inspection

Sod shall be inspected upon arrival at the job site by the Contracting Officer for conformity to type and quality in accordance with paragraph MATERIALS. Other materials shall be inspected for meeting specified requirements and unacceptable materials shall be removed from the job site.

1.4.3 Storage

Materials shall be stored in areas designated by the Contracting Officer. Sod shall be lightly sprinkled with water, covered with moist burlap, straw, or other covering and protected from exposure to wind and direct sunlight until planted. Covering for sod shall allow air to circulate and prevent internal heat from building up. Lime and fertilizer shall be stored in cool, dry locations away from contaminants. Chemical treatment materials shall not be stored with other landscape materials.

1.4.4 Handling

1.4.4.1 Materials

Care shall be taken to avoid injury to sod. Except for bulk deliveries, materials shall not be dropped or dumped from vehicles.

1.4.4.2 Time Limitation

a. Sod: Limitation of the time between harvesting and placing of sod shall be 36 hours.

PART 2 PRODUCTS

2.1 MATERIALS

2.1.1 Sod

2.1.1.1 Sod Classification

State-certified sod shall be provided as classified by applicable state laws. Each individual sod section shall be of a size to permit rolling and lifting without breaking. Sod shall be grown on soil fumigated with methyl bromide. Sod shall have been treated with appropriate fungicide and insecticide within two weeks prior to shipment.

2.1.1.2 Grass Species

Grass species shall be a bluegrass (Poa pratensis) blend or a red fescue (Festuca rubra) hybrid blend.

2.1.1.3 Quality

The sod shall be relatively free of thatch, diseases, nematodes, soil-borne insects, weeds or undesirable plants, stones larger than 1-1/2 inches in any dimension, woody plant roots and other material detrimental to a

healthy stand of turf. Sod that has become dry, moldy, or yellow from heating, or has irregularly shaped pieces of sod and torn or uneven ends shall be rejected.

2.1.1.4 Thickness

Sod shall be machine cut to a uniform thickness of 1-1/4 inches within a tolerance of 1/4 inch, excluding top growth and thatch. Measurement for thickness shall exclude top growth and thatch.

2.1.1.5 Anchors

Sod anchors shall be as recommended by the sod supplier.

2.1.2 Soil Amendments

Soil amendments shall consist of lime, fertilizer, organic soil amendments and soil conditioners meeting the following requirements.

2.1.2.1 Lime

Lime shall be agricultural limestone and shall have a minimum calcium carbonate equivalent of 90 percent and shall be ground to such a fineness that at least 90 percent will pass a 10-mesh sieve and at least 50 percent will pass a 60-mesh sieve.

2.1.2.2 Fertilizer

Fertilizer shall be commercial grade, free flowing, slow release uniform in composition and conforming to CID A-A-1909. Granular Fertilizer: As recommended by the soil test.

2.1.2.3 Organic Soil Amendments

a. Topsoil: The existing surface soil shall be stripped and stockpiled on the site in accordance with Section 02210 GRADING. When required beyond that available from stripping, the topsoil shall be delivered. Delivered topsoil shall conform to topsoil requirements specified in Section 02210 GRADING, and shall be amended as recommended by soil test.

2.1.2.4 Soil Conditioner

Soil conditioner shall be for single use or in combination to meet requirements for topsoil. Gypsum shall be commercially packaged, free flowing, minimum 95 percent calcium sulfate by volume.

2.1.3 Water

Water shall not contain elements toxic to plant life.

2.1.4 Pesticide

Pesticide shall be insecticide, herbicide, fungicide, nematocide, rodenticide and miticide. For the purpose of this specification, soil fumigant shall have the same requirements as a pesticide. The pesticide material shall be EPA registered and approved insecticide, herbicide, fungicide, nematocide, rodenticide, miticide, and soil fumigant.

PART 3 EXECUTION

3.1 SODDING TIMES AND CONDITIONS

3.1.1 Sodding Time

Sod shall be placed from May 1 to June 30 for summer planting and from September 1 to October 15 for fall planting.

3.1.2 Turfing Conditions

Turf operations shall be performed only during periods when beneficial results can be obtained. When drought, excessive moisture or other unsatisfactory conditions prevail, the work shall be stopped when directed. When special conditions warrant a variance to the turf operations, proposed times shall be submitted to and approved by the Contracting Officer.

3.2 SITE PREPARATION

3.2.1 Grading

The Contracting Officer shall verify that finished grades are as indicated on drawings, and the placing of topsoil and the smooth grading has been completed in accordance with Section 02210 GRADING.

3.2.2 Application of Soil Amendments

3.2.2.1 Soil Test

A soil test shall be performed for pH, chemical analysis and mechanical analysis to establish the quantities and type of soil amendments required to meet local growing conditions for the type and variety of turf specified.

3.2.2.2 Fertilizer

Fertilizer shall be applied at the rate recommended by the soil test. Fertilizer shall be incorporated into the soil to a minimum depth of 4 inches and may be incorporated as part of the tillage operation.

3.2.3 Tillage

3.2.3.1 Minimum Depth

Soil on slopes gentler than 3-horizontal-to-1-vertical shall be tilled to a minimum depth of 4 inches. On slopes between 3-horizontal-to-1-vertical and 1-horizontal-to-1 vertical, the soil shall be tilled to a minimum depth of 2 inches by scarifying with heavy rakes, or other method. Rototillers shall be used where soil conditions and length of slope permit. On slopes 1-horizontal-to-1 vertical and steeper, no tillage is required.

3.2.4 Finished Grading

3.2.4.1 Preparation

Turf areas shall be filled as needed or have surplus soil removed to attain the finished grade. Drainage patterns shall be maintained as indicated on drawings. Turf areas compacted by construction operations shall be completely pulverized by tillage. Soil used for repair of erosion or grade

deficiencies shall conform to topsoil requirements specified in Section 02210 GRADING. Finished grade shall be 1 inch below the adjoining grade of any surfaced area. New surfaces shall be blended to existing areas.

3.2.4.2 Lawn Area Debris

Lawn areas shall have debris and stones larger than 1 inch in any dimension removed from the surface.

3.2.4.3 Field Area Debris

Field areas shall have debris and stones larger than 3 inches in any dimension removed from the surface.

3.2.4.4 Protection

Finished graded areas shall be protected from damage by vehicular or pedestrian traffic and erosion.

3.3 SODDING

3.3.1 General

Areas shall be sodded as indicated. Adequate soil moisture shall be ensured prior to sodding by spraying water on the area to be sodded and wetting the soil to a minimum depth of 1 inch.

3.3.2 Placing Sod

Rows of sod shall be placed parallel to and tightly against each other. Joints shall be staggered laterally. The sod strips shall not be stretched or overlapped. All joints shall be butted tight. Voids and air drying of roots shall be prevented. On long slopes, sod shall be laid at right angles to slopes. In ditches, sod shall be laid at right angles to the flow of water. When required, the sod shall be anchored by placing anchors a minimum distance of 2 feet on center with a minimum of 2 anchors per sod section.

3.3.3 Finishing

Air pockets shall be eliminated and a true and even surface shall be provided by tamping or rolling the sod in place. Displacement of the sod shall be assured by knitting of sod to the soil. Frayed edges shall be trimmed and holes or missing corners shall be patched in the sod.

3.3.4 Watering Sod

Watering shall be started immediately after completing each day of sodding. Water shall be applied at a rate sufficient to ensure moist soil conditions to a minimum depth of 1 inch. Run-off and puddling shall be prevented.

3.3.5 Temporary Turf Cover

3.3.5.1 General

When there are contract delays in the turfing operation or a quick cover is required to prevent erosion, the areas designated for turf shall be seeded with a temporary seed as directed by the Contracting Officer.

3.3.5.2 Application

When no other turfing materials have been applied, the quantity of one half of the required soil amendments shall be applied and the area tilled in accordance with paragraph SITE PREPARATION. Seed shall be uniformly broadcast and applied at the rate directed by the Contracting Officer. The area shall be watered as required.

3.4 APPLICATION OF PESTICIDE

When pesticide becomes necessary to remove a pest or disease, a state-certified applicator shall apply required pesticides in accordance with EPA label restrictions and recommendations. Hydraulic equipment shall be provided for the liquid application of pesticides with a leak-proof tank, positive agitation methods, controlled application pressure and metering gauges. A pesticide plan shall be provided to the Contracting Officer as stated in paragraph SUBMITTALS.

3.5 RESTORATION AND CLEAN UP

3.5.1 Restoration

Existing turf areas, pavements and facilities that have been damaged from the turfing operation shall be restored to original condition at Contractor's expense.

3.5.2 Clean Up

Excess and waste material shall be removed from the planting operation and shall be disposed of off the site. Adjacent paved areas shall be cleaned.

3.6 PROTECTION OF TURFED AREAS

Immediately after turfing, the area shall be protected against traffic or other use by erecting barricades and providing signage as required, or as directed by the Contracting Officer.

3.7 TURF ESTABLISHMENT PERIOD

3.7.1 Commencement

Upon Substantial Completion the Turf Establishment Period for establishing a healthy stand of turf shall begin on the first day of work under this contract and shall end one (1) month after the last day of turfing operations required by this contract or until acceptance of the entire project, whichever time period is longer. Written calendar time period shall be furnished to the Contracting Officer for the Turf Establishment Period. When there is more than one turf establishment period, describe the boundaries of the turfed area covered for each period.

3.7.2 Satisfactory Stand of Turf

3.7.2.1 Sodded Area

A satisfactory stand of turf from the sodding operation is defined as living sod uniform in color and leaf texture. Bare spots shall be no larger than 2 inches square.

3.7.3 Maintenance During Establishment Period

3.7.3.1 General

Maintenance of the turfed areas shall include eradicating weeds, eradicating insects and diseases, protecting embankments and ditches from erosion, maintaining erosion control materials and mulch, protecting turfed areas from traffic, mowing, watering, and post-fertilization.

3.7.3.2 Mowing

a. Lawn Areas: Lawn areas shall be mowed to a minimum height of 2-1/2 inches when the average height of the turf becomes 3 inches. Clippings shall be removed when the amount of cut turf is heavy enough to damage the turfed areas.

3.7.3.3 Watering

Watering shall be at intervals to obtain a moist soil condition to a minimum depth of 1 inch. Frequency of watering and quantity of water shall be adjusted in accordance with the growth of the turf. Run-off, puddling and wilting shall be prevented.

3.7.3.4 Post-Fertilization

Fertilizer (10-20-10) shall be applied at the rate of 5 pounds per 1000 square feet prior to the final acceptance. The application shall be timed prior to the advent of winter dormancy and shall avoid excessively high nitrogen levels.

3.7.3.5 Pesticide

Treatment for disease or pest shall be in accordance with paragraph APPLICATION OF PESTICIDE.

3.7.3.6 Repair

The Contractor shall re-establish as specified herein, eroded, damaged or barren areas. Mulch shall also be repaired or replaced as required.

3.7.3.7 Maintenance Report

A written record shall be furnished to the Contracting Officer of the maintenance work performed.

3.8 FINAL ACCEPTANCE

3.8.1 Preliminary Inspection

Prior to the completion of the Turf Establishment Period, a preliminary inspection shall be held by the Contracting Officer. Time for the inspection shall be established in writing. The acceptability of the turf in accordance with the Turf Establishment Period shall be determined. An unacceptable stand of turf shall be repaired as soon as turfing conditions permit.

3.8.2 Final Inspection

A final inspection shall be held by the Contracting Officer to determine that deficiencies noted in the preliminary inspection have been corrected.

Time for the inspection shall be established in writing.

-- End of Section --

SECTION TABLE OF CONTENTS

DIVISION 02 - SITE WORK

SECTION 02950

TREES, SHRUBS AND GROUND COVERS

06/90

PART 1 GENERAL

1.1 REFERENCES
1.2 SUBMITTALS
1.3 SOURCE INSPECTIONS
1.3.1 Plant Materials
1.3.2 Delivered Topsoil
1.4 SHIPMENT, DELIVERY, INSPECTION, STORAGE, AND HANDLING
1.4.1 Shipment
1.4.1.1 Preparation
1.4.1.2 Antidesiccant Application
1.4.2 Delivery
1.4.2.1 Identification
1.4.2.2 Protection During Delivery
1.4.2.3 Topsoil
1.4.2.4 Soil Amendments
1.4.2.5 Pesticide
1.4.3 Inspection
1.4.4 Storage
1.4.4.1 Plant Storage
1.4.4.2 Storage of Other Materials
1.4.5 Handling
1.4.5.1 Time Limitation
1.5 WARRANTY

PART 2 PRODUCTS

2.1 PLANTS
2.1.1 Varieties
2.1.2 Substitutions
2.1.3 Growing Conditions
2.1.4 Quality
2.1.4.1 Shade and Flowering Trees
2.1.4.2 Deciduous Shrub
2.1.4.3 Coniferous Evergreen
2.1.4.4 Broadleaf Evergreen
2.1.4.5 Groundcovers and Vines
2.1.5 Size
2.1.6 Measurement
2.2 TOPSOIL
2.2.1 Soil Test
2.3 SOIL AMENDMENTS
2.3.1 Lime
2.3.2 Fertilizer
2.3.2.1 Dry Fertilizer
2.3.3 Bonemeal

2.3.4 Organic Soil Amendments
2.3.4.1 Peat
2.3.4.2 Sand
2.3.4.3 Rotted Manure
2.3.4.4 Decomposed Wood Derivatives
2.3.5 Soil Conditioner
2.3.5.1 Gypsum
2.3.5.2 Aluminum Sulfate
2.4 MULCH
2.4.1 Inert Mulch Material
2.4.2 Organic Mulch Material
2.5 TRUNK WRAPPING MATERIAL
2.6 GUYING AND STAKING MATERIAL
2.6.1 Stakes
2.6.1.1 Bracing Stakes
2.6.2 Guying Material
2.6.2.1 Guying Wire
2.6.2.2 Guying Cable
2.6.3 Chafing Guard
2.7 EDGING MATERIAL
2.7.1 Aluminum
2.7.2 Anchors
2.8 WATER
2.9 ANTIDESICCANT
2.10 TREE WOUND DRESSING
2.11 PESTICIDE

PART 3 EXECUTION

3.1 EXAMINATION
3.1.1 Verify Grades
3.1.2 Underground Obstructions to Planting
3.2 SITE PREPARATION
3.2.1 Layout
3.2.2 Protection of Existing Vegetation
3.3 EXCAVATION
3.3.1 Obstructions Below Ground or Poor Drainage
3.3.2 Turf Removal
3.3.3 Plant Pits
3.4 PERCOLATION TEST
3.5 PLANTING TIMES AND CONDITIONS
3.5.1 Deciduous Planting Time
3.5.2 Evergreen Planting Time
3.5.3 Planting Conditions
3.6 INSTALLATION
3.6.1 Topsoil Mixture
3.6.2 Setting Plants
3.6.3 Controlled-Release Fertilizer
3.6.4 Balled and Burlapped Plants
3.6.5 Container-Grown, Balled and Platformed and Balled and Potted Plants
3.6.6 Groundcover Bed
3.6.6.1 Plant Beds in Replaced Soil
3.6.6.2 Groundcover
3.6.7 Staking and Guying
3.6.7.1 Two Bracing Stakes
3.6.7.2 Three Guying Wires
3.6.8 Edging Material
3.7 FINISHING

3.7.1 Plant Beds
3.7.2 Pruning
3.7.3 Mulch
3.7.4 Trunk Wrap
3.7.5 Water
3.7.6 Antidesiccant Application
3.8 MAINTENANCE DURING PLANTING OPERATION
3.9 APPLICATION OF PESTICIDE MATERIAL
3.10 RESTORATION AND CLEAN UP
3.10.1 Restoration
3.10.2 Clean Up
3.11 PLANT ESTABLISHMENT PERIOD
3.11.1 Commencement
3.11.2 Maintenance During Establishment Period
3.11.2.1 General
3.11.2.2 Water
3.11.2.3 Weeding
3.11.2.4 Unhealthy Plants
3.11.2.5 Fertilizing
3.11.2.6 Settlement
3.11.2.7 Pesticide Treatment
3.11.2.8 Maintenance Report
3.11.2.9 Maintenance Instructions
3.11.3 Replacement Plants
3.12 FINAL ACCEPTANCE
3.12.1 Preliminary Inspection
3.12.2 Final Inspection

-- End of Section Table of Contents --

SECTION 02950

TREES, SHRUBS AND GROUND COVERS

06/90

PART 1 GENERAL

1.1 REFERENCES

The publications listed below form a part of this specification to the extent referenced. The publications are referred to in the text by basic designation only.

AMERICAN ASSOCIATION OF NURSERYMEN (AAN)

AAN-01	(1990) American Standard for Nursery Stock

AMERICAN SOCIETY FOR TESTING AND MATERIALS (ASTM)

ASTM D 2607	(1969) Peats, Mosses, Humus, and Related Products

COMMERCIAL ITEM DESCRIPTIONS (CID)

CID A-A-1909	(Basic; Notice 1) Fertilizer

1.2 SUBMITTALS

Government approval is required for submittals with a "GA" designation; submittals having an "FIO" designation are for information only. The following shall be submitted in accordance with Section 01300 SUBMITTAL PROCEDURES:

SD-01 Data

Edging Material; GA.

Manufacturer's literature discussing physical characteristics, application and installation instructions for edging material and erosion control material.

SD-07 Schedules

Application of Pesticide Material; FIO.

A list of the proposed pesticide application equipment to be used in performance of the planting work, including descriptive data and calibration tests.

SD-08 Statements

Delivery; FIO. Application of Pesticide Material; FIO.

The following work plans, before work is started.

a. Delivery Schedule at least 10 days prior to the intended date of the first delivery.

b. Pesticide Treatment Plan, giving proposed sequence of pesticide treatment work, before work is started. The pesticide trade name, chemical composition, formulation, concentration, application rate of active ingredients and methods of application for all materials furnished, and the name and state license number of the state certified applicator shall be included.

SD-09 Reports

Soil Test; FIO. Percolation Test; FIO.

Certified reports of inspections and laboratory tests, prepared by an independent testing agency, including analysis and interpretation of test results. Each report shall be properly identified. Test methods used and compliance with recognized test standards shall be described.

SD-13 Certificates

Topsoil; FIO. Soil Amendments; FIO. Plants; FIO. Pesticide; FIO.

Certificates of compliance certifying that materials meet the requirements specified, prior to the delivery of materials. Reports for the following materials shall be included.

a. Topsoil: For pH, chemical analysis, mechanical analysis and particle size.

b. Fertilizer: For chemical analysis and composition percent.

c. Agricultural Limestone: For sieve analysis and calcium carbonate equivalent.

d. Peat: For compliance with ASTM D 2607.

e. Plant Materials: For botanical and common name, size, quantity by species, grade, nursery grown.

f. Pesticide Material: For EPA registration number and registered uses.

SD-18 Records

Plant Establishment Period; FIO. Maintenance Report; FIO. Maintenance Instructions; FIO.

a. Maintenance Report. Written record of maintenance work performed and quantity of plant losses and replacements.

b. Plant Establishment Period. Written calendar time period for the beginning of the plant establishment period. When there is more than one establishment period, the boundaries of the planted areas covered for each period shall be described.

c. Maintenance Instruction. Written instructions for year-round care of installed plants.

1.3 SOURCE INSPECTIONS

1.3.1 Plant Materials

Plant materials shall be subject to inspection at the growing site by the Contracting Officer.

1.3.2 Delivered Topsoil

The source of topsoil shall be subject to inspection by the Contracting Officer.

1.4 SHIPMENT, DELIVERY, INSPECTION, STORAGE, AND HANDLING

1.4.1 Shipment

1.4.1.1 Preparation

Digging and preparation for shipment shall be done in a manner that will not cause shock or damage to branches, trunk, or root systems.

a. Balled and Burlapped (BB) Plants: Ball size and ratio shall be provided as recommended by AAN-01. The ball shall be of a diameter and depth to encompass enough fibrous and feeding root system necessary for the full recovery of the plant. Removal shall be accomplished by hand digging or mechanical devices. Center the plant stem or trunk in the ball and clean cut all roots at the ball surface. No roots shall be pulled from the ground. The root ball shall be completely wrapped with burlap or other suitable material and securely laced with twine.

b. Balled and Potted (Pot) Plants: Ball size and ratio shall be provided as recommended by AAN-01. The ball shall be of a diameter and depth to encompass enough fibrous and feeding root system necessary for the full recovery of the plant. Removal shall be accomplished by hand digging or mechanical devices. The plant stem or trunk shall be centered in the ball and all roots shall be clean cut at the ball surface. No roots shall be pulled from the ground. Containers shall be used to retain the ball unbroken. Container shall be sufficiently rigid to hold ball shape and protect root mass during shipping.

c. Balled and Platform (BP) Plants: Ball size and ratio shall be provided as recommended by AAN-01. Plants shall be prepared as BB plants and securely fastened to wood platform for shipping.

d. Container-Grown (C) Plants: Container size shall be provided as recommended by AAN-01. Plants shall be grown in a container sufficiently long for new fibrous roots to have developed and for root mass to retain its shape and hold together when removed from container. Container shall be sufficiently rigid to hold ball shape and protect root mass during shipping.

1.4.1.2 Antidesiccant Application

Plants shall be sprayed with an antidesiccant as leaf budding occurs or when plant material has soft growth.

1.4.2 Delivery

1.4.2.1 Identification

Plants shall be identified with durable waterproof labels and weather-resistant ink. Plants shall have attached labels stating the correct plant name and size.

1.4.2.2 Protection During Delivery

Plants shall be protected during delivery to prevent desiccation of the plant or damage to the roots or balls. Branches of plants shall be protected by tying-in the branches and covering all exposed branches.

1.4.2.3 Topsoil

A soil test shall be provided for topsoil delivered to the site.

1.4.2.4 Soil Amendments

Soil amendments shall be delivered to the site in the original, unopened containers bearing the manufacturer's chemical analysis. In lieu of containers, soil amendments may be furnished in bulk. A chemical analysis shall be provided for bulk deliveries.

1.4.2.5 Pesticide

Pesticide materials shall be delivered to the site in the original unopened containers bearing legible labels indicating the Environmental Protection Agency (EPA) registration numbers and the registered uses.

1.4.3 Inspection

Plant material shall be inspected upon arrival at the jobsite by the Contracting Officer for conformity to the paragraph PLANTS and paragraph Shipment, and any unacceptable plant material shall be removed from the jobsite.

1.4.4 Storage

1.4.4.1 Plant Storage

Plants not installed on the day of arrival at the site shall be stored and protected in areas designated by the Contracting Officer. Plants shall be protected from exposure to wind and shall be shaded from the sun. Covering that will allow air to circulate and prevent internal heat from building up shall be provided. Bare-root plants shall be heeled-in. All plants shall be kept in a moist condition by watering with a fine mist spray until planted.

1.4.4.2 Storage of Other Materials

Soil amendments shall be stored in dry locations away from contaminants. Pesticide materials shall not be stored with other landscape materials. Storage of materials shall be in areas designated or as approved by the Contracting Officer.

1.4.5 Handling

Care shall be taken to avoid injury to plants. Materials shall not be

dropped from vehicles. Balled and burlapped plants shall be handled carefully to avoid cracking or breaking the earth ball and container-grown plants shall be handled by the container. Plants shall not be handled by the trunk or stems.

1.4.5.1 Time Limitation

a. Mulch: Limitation of time between installing plant and placing mulch is 48 hours.

b. Trunk Wrap: Limitation of time between installing deciduous trees and wrapping the trunks is 24 hours.

1.5 WARRANTY

Furnished plants shall be guaranteed to be in a vigorous growing condition for a period of 12 months regardless of the contract time period. A plant shall be replaced one time under this guarantee. Transplanted existing plants require no guarantee. A written calendar time period for the guarantee of plant growth shall be furnished to the Contracting Officer.

PART 2 PRODUCTS

2.1 PLANTS

2.1.1 Varieties

Plants shall be nursery grown or plantation grown stock conforming to AAN-01 and shall be of the varieties specified in the plant list bearing botanical names listed in one or more of the publications listed under "Nomenclature" in AAN-01.

2.1.2 Substitutions

Substitutions will not be permitted without written request from the Contractor for approval by the Contracting Officer.

2.1.3 Growing Conditions

Plants shall be grown under climatic conditions similar to those in the locality of the project.

2.1.4 Quality

Well shaped, well grown, vigorous, healthy plants having healthy and well branched root systems shall be provided. Plants shall be provided free from disease, harmful insects and insect eggs, sun-scald injury, disfigurement and abrasion. Plants shall be provided that are typical of the species or variety and conforming to standards as set forth in AAN-01 and as specified herein.

2.1.4.1 Shade and Flowering Trees

A height relationship to caliper shall be provided as recommended by AAN-01. Height of branching should bear a relationship to the size and variety of tree specified and with the crown in good balance with the trunk. Trees shall not be "poled" or the leader removed.

a. Single stem: Trunk shall be reasonably straight and symmetrical

with crown and have a persistent main leader.

b. Multi-stem: All countable stems, in aggregate, shall average the size specified. To be considered a stem, there should be no division of the trunk which branches more than six inches from ground level.

c. Specimen: A plant shall be provided that is well branched and pruned naturally according to the species. The form of growth desired, which may not be in accordance with natural growth habit, shall be as indicated.

2.1.4.2 Deciduous Shrub

Plants shall be provided that have the height and number of primary stems as recommended by AAN-01. An acceptable plant shall be well shaped with sufficient well-spaced side branches recognized by the trade as typical for the variety grown in the region.

2.1.4.3 Coniferous Evergreen

Trees shall be provided that have the height-to-spread ratio as recommended by AAN-01. Trees shall not be "poled" or the leader removed. An acceptable plant shall be exceptionally heavy, well shaped and trimmed to form a symmetrical and tightly knit plant. The form of growth desired shall be as indicated.

2.1.4.4 Broadleaf Evergreen

Plants shall be provided that have ratio of height-to-spread as recommended by AAN-01. An acceptable plant shall be well shaped and recognized by the trade as typical for the variety grown in the region.

2.1.4.5 Groundcovers and Vines

Plants shall be provided with the minimum number of runners and length of runner as recommended by AAN-01. Plants shall be furnished that have heavy, well developed and balanced top with vigorous well developed root system and shall be furnished in containers.

2.1.5 Size

Plants shall be furnished in sizes indicated. Plants larger in size than specified may be provided at no additional cost to the Government.

2.1.6 Measurement

Plant measurements shall be in accordance with AAN-01.

2.2 TOPSOIL

Topsoil shall be the existing surface soil stripped to the depth indicated and stockpiled on the site in accordance with Section 02210 GRADING. Additional topsoil, if required, beyond that available from stripping operations, shall be delivered. Delivered topsoil shall conform to topsoil requirement specified in Section 02210 GRADING and shall be amended as recommended by soil tests for the plants specified.

2.2.1 Soil Test

A soil test shall be performed for pH, particle size, chemical analysis and mechanical analysis to establish the quantities and type of soil amendments required to meet local growing conditions for the type and variety of plants specified.

2.3 SOIL AMENDMENTS

Soil amendments consist of lime, fertilizer, bonemeal, organic soil amendments and soil conditioner.

2.3.1 Lime

Lime shall be agricultural limestone and shall have a minimum calcium carbonate equivalent of 90 percent and shall be ground to such a fineness that at least 90 percent will pass a 10-mesh sieve and at least 50 percent will pass a 60-mesh sieve.

2.3.2 Fertilizer

Fertilizer shall be commercial grade, free flowing, uniform in composition and conforming to CID A-A-1909.

2.3.2.1 Dry Fertilizer

a. Controlled-Release Fertilizer: Consists of nitrogen-phosphorous-potassium ratio: 10 percent nitrogen 20 percent phosphorous, and 10 percent potassium. Controlled-release fertilizer may be in packet, tablet or granular form.

2.3.3 Bonemeal

Bonemeal shall be a finely ground, steamed bone product containing from 2 to 4 percent nitrogen and 16 to 40 percent phosphoric acid.

2.3.4 Organic Soil Amendments

2.3.4.1 Peat

Peat shall be a natural product of peat humus derived from a bog, swampland or marsh and shall conform to ASTM D 2607.

2.3.4.2 Sand

Sand shall be clean and free of toxic materials and at least 95 percent by weight shall pass a 10-mesh sieve, and 10 percent by weight shall pass a 16-mesh sieve.

2.3.4.3 Rotted Manure

Rotted manure shall be unleached stable or cattle manure containing not more than 25 percent by volume of straw, sawdust, or other bedding materials and containing no chemicals or ingredients harmful to plants. The manure shall be heat treated to kill weed seeds and be free of stones, sticks, and soil.

2.3.4.4 Decomposed Wood Derivatives

Decomposed wood derivatives shall be ground bark, sawdust, or other wood

waste material free of stones, sticks, and toxic substances harmful to plants and stabilized with nitrogen and having the following properties:

Particle size	Minimum percent by weight passing
No. 4 mesh screen	95
No. 8 mesh screen	80

Nitrogen Content	Minimum percent based on dry weight
Redwood Sawdust	0.5
Fir Sawdust	0.7
Fir or Pine Bark	1.0

2.3.5 Soil Conditioner

For single use or in combination to meet requirements for topsoil.

2.3.5.1 Gypsum

Gypsum shall be commercially packaged, free flowing, and a minimum of 95 percent calcium sulfate by volume.

2.3.5.2 Aluminum Sulfate

Aluminum sulfate shall be commercial grade.

2.4 MULCH

Mulch shall be free from weeds, mold and other deleterious materials.

2.4.1 Inert Mulch Material

Inert mulch materials shall be riverbank stone or granite chips, matching size and color currently used on-base.

2.4.2 Organic Mulch Material

Organic mulch materials shall be shredded bark ranging in size from 1 to 3 inches.

2.5 TRUNK WRAPPING MATERIAL

Tree wrap shall be two thicknesses of crinkled paper cemented together with a layer of bituminous material. Wrapping material shall be a minimum of 4 inches in width and have a stretch factor of 33-1/3 percent. Twine for tying shall be lightly tarred medium or coarse sisal yarn.

2.6 GUYING AND STAKING MATERIAL

2.6.1 Stakes

Stakes for tree support shall be rough sawn wood, free from knots, rot,

cross grain, or other defects that would impair the strength. Standard stakes shall be hardwood or fir treated with pentachlorophenol.

2.6.1.1 Bracing Stakes

Bracing stakes shall be a minimum of 2 inches by 2 inches or 2-1/2 inches in diameter by 8 feet long and pointed at one end.

2.6.2 Guying Material

2.6.2.1 Guying Wire

Guying wire shall be 12-gauge annealed galvanized steel wire.

2.6.2.2 Guying Cable

Guying cable shall be a minimum of five-strand, 3/16-inch diameter cadmium plated steel cable.

2.6.3 Chafing Guard

Hose chafing guards shall be new or used 2-ply reinforced rubber or plastic hose and shall be black. Length shall be 1-1/2 times the circumference of the plant at its base.

2.7 EDGING MATERIAL

2.7.1 Aluminum

Aluminum edging shall be black electrostatically painted aluminum alloy 6061-T6 hardness, 5-1/2 inches deep by 3/16 inch thick in 16 foot lengths with horizontal undulations.

2.7.2 Anchors

Edging material anchors shall be as recommended by the manufacturer.

2.8 WATER

Water shall not contain elements toxic to plant life.

2.9 ANTIDESICCANT

Antidesiccant shall be an emulsion that will provide a film over plant surfaces permeable enough to permit transpiration, and shall not damage the plant.

2.10 TREE WOUND DRESSING

Tree wound dressing shall be a black paint consisting of Bordeaux Mixture, raw linseed oil, and lamp black.

2.11 PESTICIDE

Pesticide shall be insecticide, herbicide, fungicide, nematocide, rodenticide, and miticide. Pesticide material shall be labeled for use and applied only as registered by EPA and approved herbicide, insecticide, fungicide, nematocide, rodenticide and miticide.

PART 3 EXECUTION

3.1 EXAMINATION

3.1.1 Verify Grades

The Contracting Officer shall verify the finished grades are as indicated on drawings, and the placing of topsoil and smooth grading has been completed in accordance with Section 02210 GRADING.

3.1.2 Underground Obstructions to Planting

The location of underground utilities and facilities shall be verified. Damage to underground utilities and facilities shall be repaired at the Contractor's expense.

3.2 SITE PREPARATION

3.2.1 Layout

Plant material locations and bed outlines shall be staked on the project site before any excavation is made. Plant material locations may be adjusted by the Contracting Officer to meet field conditions.

3.2.2 Protection of Existing Vegetation

If lawns have been established prior to planting operations, the surrounding turf shall be covered before excavations are made in a manner that will protect turf areas. Existing trees, shrubbery, and beds that are to be preserved shall be barricaded in a manner that will effectively protect them during planting operations.

3.3 EXCAVATION

3.3.1 Obstructions Below Ground or Poor Drainage

When obstructions below ground or poor drainage affect the contract operation, proposed adjustments to plant location, type of plant and planting method or drainage correction shall be submitted to and approved by the Contracting Officer.

3.3.2 Turf Removal

Where planting beds occur in existing turf areas, the turf shall be removed to a depth that will ensure the removal of the entire root system.

3.3.3 Plant Pits

Plant pits shall be dug to produce vertical sides and flat, uncompacted bottoms. When pits are dug with an auger and the sides of the pits become glazed, the glazed surface shall be scarified. The size of plant pits shall be 2 times larger than root ball.

3.4 PERCOLATION TEST

Test for percolation shall be done to determine positive drainage of plant pits and beds. The Contracting Officer shall be notified in writing of all soil and drainage conditions detrimental to growth of plant material and shall submit proposal for correcting the condition.

3.5 PLANTING TIMES AND CONDITIONS

3.5.1 Deciduous Planting Time

Install deciduous plants from October 1 to June 15.

3.5.2 Evergreen Planting Time

Install evergreen plants from October 1 to June 15.

3.5.3 Planting Conditions

Planting operations shall be performed only during periods when beneficial results can be obtained. When drought, excessive moisture or other unsatisfactory conditions prevail, the work shall be stopped when directed. When special conditions warrant a variance to the planting operations, proposed planting times shall be submitted to and approved by the Contracting Officer.

3.6 INSTALLATION

3.6.1 Topsoil Mixture

The topsoil mixture shall be a proportioned mixture thoroughly mixed by volume of topsoil and selected soil amendments as follows:

Existing topsoil	5 parts.
Composted manure	1 part.
Sand	1 part.

3.6.2 Setting Plants

Plants shall be set plumb and held in position until sufficient soil has been firmly placed around roots or ball. Plants shall be set in relation to surrounding grade so that they are even with the depth at which they were grown in the nursery, or container.

3.6.3 Controlled-Release Fertilizer

Controlled-release fertilizer shall be placed in packet, tablet or granular form in the plant pit or shrub bed area in the immediate vicinity of the feeding roots in accordance with the manufacturer's recommendations.

3.6.4 Balled and Burlapped Plants

Materials shall be removed that are metal, plastic, nylon or treated burlap, prior to backfilling. Balled and burlapped stock shall be backfilled with backfill soil mixture to approximately half the depth of the ball and then tamped and watered. Biodegradable burlap and tying material shall be carefully opened and folded back. The backfill shall be completed, tamped and watered. A 4-inch high earth saucer shall be formed around individual plants.

3.6.5 Container-Grown, Balled and Platformed and Balled and Potted Plants

Non-biodegradable containers or platforms shall be removed without damage

to the plant or root system. Biodegradable containers shall be split. The backfill shall be completed as specified for BB plants.

3.6.6 Groundcover Bed

3.6.6.1 Plant Beds in Replaced Soil

When soil replacement is required, the existing soil shall be excavated and removed to a minimum depth of 8 inches and topsoil mixture shall be placed on previously scarified subsoil to a minimum depth of 6 inches. The bed shall be brought to an 8-inch crown except where adjacent to building. Provide positive drainage from building. Settlement shall be allowed for.

3.6.6.2 Groundcover

Groundcover may be planted after the mulch is in place. Contaminating the mulch with soil shall be avoided.

3.6.7 Staking and Guying

3.6.7.1 Two Bracing Stakes

Trees over 6 feet tall shall be held in place with two bracing stakes placed on opposite sides. The tree shall be held firmly between the stakes with a double strand of wire. Chafing guards shall be used where the wire contacts the tree. Bracing stakes shall be driven vertically into firm ground and shall not injure the ball or roots.

3.6.7.2 Three Guying Wires

Trees shall be held firmly in place with three guying lines of double strand wire spaced equidistantly around the tree. The line shall be anchored with ground stakes. The line shall be anchored to the tree at a point equal to one half its height. Chafing guards shall be used where the line contacts the tree. Ground stakes shall be driven into firm ground outside the earth saucer and plant pit with the top of the stake flush with the ground surface.

3.6.8 Edging Material

Edging material shall be installed in accordance with the manufacturer's recommendations and/or as indicated.

3.7 FINISHING

3.7.1 Plant Beds

Planted areas shall be uniformly edged to provide a clear-cut division line between the planted area and the adjacent turf area and to provide a shape as indicated. The entire planted area shall be raked and smoothed while maintaining the earth saucers.

3.7.2 Pruning

The total amount of foliage shall be pruned by one-fourth to one-third on installed trees and shrubs to compensate for loss of roots and transplanting shock. The typical growth habit of individual plants shall be retained. Clean cuts shall be made flush with the parent trunk. Improper cuts, stubs, dead and broken branches shall be removed.

"Headback" cuts at right angles to the line of growth shall not be permitted. Trees shall not be poled or the leader removed, nor shall the leader be pruned or "topped off." Cuts or wounds measuring a minimum 1/2 inch in diameter shall be painted with the specified tree wound dressing.

3.7.3 Mulch

Mulch shall be spread to a uniform thickness of 3 inches for shredded bark mulch and 2 inches for inert mulch within 48 hours after planting. Mulch shall be kept out of the crowns of shrubs and off buildings, sidewalks and other facilities.

3.7.4 Trunk Wrap

The trunks to deciduous trees shall be wrapped within 24 hours after planting. Trees 1-1/2 inches or greater in caliper shall be wrapped with the specified material beginning at the base and extending up to the first branches. The wrapping shall be securely tied with twine at the top and bottom and at 18-inch intervals.

3.7.5 Water

Plants shall be watered as necessary to maintain an adequate supply of moisture within the root zone. Run-off, puddling and wilting shall be prevented.

3.7.6 Antidesiccant Application

Plants requiring further protection shall be sprayed with anti-desiccant in accordance with manufacturer's recommendations.

3.8 MAINTENANCE DURING PLANTING OPERATION

Installed plants shall be maintained in a healthy growing condition. Maintenance operations shall begin immediately after each plant is installed and shall continue until the plant establishment period commences. The maintenance includes watering, pruning, wound dressing, straightening and other necessary operations. Plant beds and earth saucers shall be kept free of weeds, grass and other undesired vegetation. Plants shall be checked for settlement and shall be reset proper grade as necessary. Run-off, puddling and wilting shall be prevented.

3.9 APPLICATION OF PESTICIDE MATERIAL

When pesticide becomes necessary to remove a disease or pest, a state-certified applicator shall apply required pesticide in accordance with State EPA label restrictions and recommendations. Hydraulic equipment shall be provided for the liquid application of pesticides with a leak-proof tank, positive agitation methods, controlled application pressure and metering gauges. A pesticide treatment plan shall be provided to the Contracting Officer as specified in paragraph SUBMITTALS.

3.10 RESTORATION AND CLEAN UP

3.10.1 Restoration

Turf areas, pavements and facilities that have been damaged from the planting operation shall be restored to original condition at the Contractor's expense.

3.10.2 Clean Up

Excess and waste material from the planting operation shall be removed and disposed of off the site. Adjacent paved areas shall be cleared.

3.11 PLANT ESTABLISHMENT PERIOD

3.11.1 Commencement

On completion of the last day of the planting operation and all other contract installation items including civil, electrical, architectural and other disciplines to complete the project. The plant establishment period for maintaining installed plants in a healthy growing condition shall commence and shall be in effect for the remaining contract time period not to exceed 12 months. When the planting operation extends over more than one season or there is a variance to the planting times, plant establishment periods shall be established for the work completed, as directed. Written calendar time period shall be furnished to the Contracting Officer for the beginning of the plant establishment period. When there is more than one plant establishment period, describe the boundaries of the planted area covered for each period.

3.11.2 Maintenance During Establishment Period

3.11.2.1 General

Maintenance of plants shall include straightening plants, tightening stakes and guying material, repairing tree wrapping, protecting plant areas from erosion, maintaining erosion control material, supplementing mulch, accomplishing wound dressing, removing dead or broken tip growth by pruning, maintaining edging of beds, checking for girdling of plants and maintaining plant labels, watering, weeding, removing and replacing unhealthy plants.

3.11.2.2 Water

The plants shall be watered as necessary to maintain an adequate supply of moisture within the root zone. An adequate supply of moisture is estimated to be the equivalent of one inch of absorbed water per week delivered in the form of natural rain or augmented as required by periodic waterings. Run-off, puddling and wilting shall be prevented.

3.11.2.3 Weeding

Grass and weeds in earth saucers and plant beds shall not be allowed to reach a height of 3 inches before being completely removed, including the root growth.

3.11.2.4 Unhealthy Plants

A plant shall be considered unhealthy or dead when the main leader has died back, or 25 percent of the crown is dead. Determine the cause for an unhealthy plant. Unhealthy or dead plants shall be removed immediately and shall be replaced as soon as seasonal conditions permit.

3.11.2.5 Fertilizing

The plants shall be topdressed at least once during the period of

establishment with dry fertilizer (10-20-10) at the rate of 5 pounds per 100 square feet of plant pit or bed area or foliar feed plants with liquid fertilizer. Dry fertilizer adhering to plants shall be flushed off. The application shall be timed prior to the advent of winter dormancy.

3.11.2.6 Settlement

Topsoil shall be added to maintain grade and to maintain earth saucers. Serious settlement affecting the setting of the plant in relation to the depth at which it was grown requires replanting in accordance with paragraph INSTALLATION.

3.11.2.7 Pesticide Treatment

Treatment for diseases or pest shall be in accordance with paragraph APPLICATION OF PESTICIDE MATERIAL.

3.11.2.8 Maintenance Report

A written record shall be furnished to the Contracting Officer of the maintenance work performed, the quality of plant losses, cause for plant loss and replacements made on each site visit.

3.11.2.9 Maintenance Instructions

Written instructions shall be furnished to the Contracting Officer for year-round care of installed plants.

3.11.3 Replacement Plants

Plants shall be provided for replacement in accordance with paragraph PLANTS. Replacement plants shall be installed in accordance with paragraph INSTALLATION. No extended plant establishment period Shall be required for replacement plants. A plant will be replaced in accordance with paragraph WARRANTY.

3.12 FINAL ACCEPTANCE

3.12.1 Preliminary Inspection

Prior to the plant establishment period, preliminary inspection shall be held by the Contracting Officer. Time for the inspection will be established in writing. The quantity and type of plants installed and the acceptability of the plants in accordance with the plant establishment period shall be determined.

3.12.2 Final Inspection

A final inspection shall be held by the Contracting Officer to determine that deficiencies noted in the preliminary inspection have been corrected. Time for the inspection shall be established in writing. Acceptance of the planting operation is subject to the guarantee of plant growth.

-- End of Section --

SECTION TABLE OF CONTENTS

DIVISION 03 - CONCRETE

SECTION 03100

STRUCTURAL CONCRETE FORMWORK

11/88

PART 1 GENERAL

1.1 REFERENCES
1.2 SUBMITTALS
1.3 DESIGN

PART 2 PRODUCTS

2.1 FORM MATERIALS
2.1.1 Forms For Class B Finish
2.1.2 Forms For Class D Finish
2.1.3 Form Ties
2.1.4 Form Releasing Agents

PART 3 EXECUTION

3.1 INSTALLATION
3.1.1 Formwork
3.2 CHAMFERING
3.3 COATING
3.4 REMOVAL OF FORMS

-- End of Section Table of Contents --

SECTION 03100

STRUCTURAL CONCRETE FORMWORK
11/88

PART 1 GENERAL

1.1 REFERENCES

The publications listed below form a part of this specification to the extent referenced. The publications are referred to in the text by basic designation only.

AMERICAN CONCRETE INSTITUTE (ACI)

ACI 347R (1988) Guide to Formwork for Concrete

DEPARTMENT OF COMMERCE (DOC)

DOC PS 1 (1983) Construction and Industrial Plywood

1.2 SUBMITTALS

Government approval is required for submittals with a "GA" designation; submittals having an "FIO" designation are for information only. The following shall be submitted in accordance with Section 01300 SUBMITTAL PROCEDURES:

SD-01 Data

Design; GA.

Design analysis and calculations for form design and methodology used in the design.

Concrete Formwork; FIO.

Manufacturer's data including literature describing form materials, accessories, and form releasing agents.

SD-04 Drawings

Concrete Formwork; FIO.

Drawings showing details of formwork including, dimensions of fiber voids, joints, supports, studding and shoring, and sequence of form and shoring removal.

SD-06 Instructions

Form Releasing Agents; FIO.

Manufacturer's recommendation on method and rate of application of form releasing agents.

1.3 DESIGN

Formwork shall be designed in accordance with methodology of ACI 347R for anticipated loads, lateral pressures, and stresses. Forms shall be capable of producing a surface which meets the requirements of the class of finish specified in Section 03300 CAST-IN-PLACE STRUCTURAL CONCRETE. Forms shall be capable of withstanding the pressures resulting from placement and vibration of concrete.

PART 2 PRODUCTS

2.1 FORM MATERIALS

2.1.1 Forms For Class B Finish

Forms for Class B finished surfaces shall be plywood panels conforming to DOC PS 1, Grade B-B concrete form panels, Class I or II. Other form materials or liners may be used provided the smoothness and appearance of concrete produced will be equivalent to that produced by the plywood concrete form panels.

2.1.2 Forms For Class D Finish

Forms for Class D finished surfaces, except where concrete is placed against earth, shall be wood or steel or other approved concrete form material.

2.1.3 Form Ties

Form ties shall be factory-fabricated metal ties, shall be of the removable or internal disconnecting or snap-off type, and shall be of a design that will not permit form deflection and will not spall concrete upon removal. Solid backing shall be provided for each tie. Except where removable tie rods are used, ties shall not leave holes in the concrete surface less than 1/4 inch nor more than 1 inch deep and not more than 1 inch in diameter. Removable tie rods shall be not more than 1-1/2 inches in diameter.

2.1.4 Form Releasing Agents

Form releasing agents shall be commercial formulations that will not bond with, stain or adversely affect concrete surfaces. Agents shall not impair subsequent treatment of concrete surfaces depending upon bond or adhesion nor impede the wetting of surfaces to be cured with water or curing compounds.

PART 3 EXECUTION

3.1 INSTALLATION

3.1.1 Formwork

Forms shall be mortar tight, properly aligned and adequately supported to produce concrete surfaces meeting the surface requirements specified in Section 03300 CAST-IN-PLACE STRUCTURAL CONCRETE and conforming to construction tolerance given in TABLE 1. Where concrete surfaces are to have a Class B finish, joints in form panels shall be arranged as approved. Where forms for continuous surfaces are placed in successive units, care shall be taken to fit the forms over the completed surface so as to obtain accurate alignment of the surface and to prevent leakage of mortar. Forms shall not be reused if there is any evidence of surface wear and tear or

defects which would impair the quality of the surface. Surfaces of forms to be reused shall be cleaned of mortar from previous concreting and of all other foreign material before reuse. Form ties that are to be completely withdrawn shall be coated with a nonstaining bond breaker.

3.2 CHAMFERING

Except as otherwise shown, external corners that will be exposed shall be beveled by moldings placed in the forms.

3.3 COATING

Forms for Class B finished surfaces shall be coated with a form releasing agent before the form or reinforcement is placed in final position. The coating shall be used as recommended in the manufacturer's printed or written instructions. Forms for Class D finished surfaces may be wet with water in lieu of coating immediately before placing concrete, except that in cold weather with probable freezing temperatures coating shall be mandatory. Surplus coating on form surfaces and coating on reinforcing steel and construction joints shall be removed before placing concrete.

3.4 REMOVAL OF FORMS

Forms shall be removed in a manner that will prevent injury to the concrete and ensure the complete safety of the structure. Formwork for columns, walls, side of beams and other parts not supporting the weight of concrete may be removed when the concrete has attained sufficient strength to resist damage from the removal operation but not before at least 24 hours has elapsed since concrete placement. Supporting forms and shores shall not be removed from beams, floors and walls until the structural units are strong enough to carry their own weight and any other construction or natural loads. In no case will supporting forms or shores be removed before the concrete strength has reached 70 percent of design strengths as determined by field cured cylinders or other approved methods. This strength shall be demonstrated by job-cured test specimens, and by a structural analysis considering the proposed loads in relation to these test strengths and the strength of forming and shoring system. The job-cured test specimens for form removal purposes shall be provided in numbers as directed and shall be in addition to those required for concrete quality control. The specimens shall be removed from molds at the age of 24 hours and shall receive, insofar as possible, the same curing and protection as the structures they represent.

TABLE 1

TOLERANCES FOR FORMED SURFACES

1. Variations from the plumb:	In any 10 feet of length -----	1/4 inch
a. In the lines and surfaces of columns, piers, walls and in arises	Maximum for entire length -----	1 inch

TABLE 1

TOLERANCES FOR FORMED SURFACES

b. For exposed corner columns, control-joint grooves, and other conspicuous lines	In any 20 feet of length ----- 1/4 inch Maximum for entire length ---- 1/2 inch
2. Variation from the level or from the grades indicated on the drawings:	In any 10 feet of length ----- 1/4 inch In any bay or in any 20 feet of length ---------- 3/8 inch
a. In exposed lintels, sills, parapets, horizontal grooves, and other conspicuous lines	In any bay or in any 20 feet of length ---------- 1/4 inch Maximum for entire length ---- 1/2 inch
3. Variation of the linear building lines from established position in plan	In any 20 feet ---------- 1/2 inch Maximum ---------- 1 inch
4. Variation of distance between walls, columns, partitions	1/4 inch per 10 feet of distance, but not more than 1/2 inch in any one bay, and not more than 1 inch total variation
5. Variation in the sizes and locations of sleeves, floor openings, and wall opening	Minus ---------- 1/4 inch Plus ---------- 1/2 inch
6. Variation in cross-sectional dimensions of columns and beams and in the thickness of slabs and walls	Minus ---------- 1/4 inch Plus ---------- 1/2 inch
7. Footings:	
a. Variation of dimensions in plan	Minus ---------- 1/2 inch Plus ---------- 2 inches when formed or plus 3 inches when placed against unformed excavation
b. Misplacement of eccentricity	2 percent of the footing width in the direction of misplacement but not more than ---------- 2 inches
c. Reduction in thickness	Minus ---------- 5 percent of specified thickness
8. Variation in steps:	Riser ---------- 1/8 inch
a. In a flight of stairs	Tread ---------- 1/4 inch

TABLE 1

TOLERANCES FOR FORMED SURFACES

b. In consecutive steps	Riser	1/16 inch
	Tread	1/8 inch

-- End of Section --

SECTION TABLE OF CONTENTS

DIVISION 03 - CONCRETE

SECTION 03200

CONCRETE REINFORCEMENT

11/88

PART 1 GENERAL

1.1 REFERENCES
1.2 SUBMITTALS
1.3 QUALIFICATIONS
1.4 DELIVERY AND STORAGE

PART 2 PRODUCTS

2.1 DOWELS
2.2 REINFORCING STEEL
2.3 WIRE TIES
2.4 SUPPORTS

PART 3 EXECUTION

3.1 REINFORCEMENT
3.1.1 Placement
3.1.2 Splicing
3.2 DOWELS

-- End of Section Table of Contents --

SECTION 03200

CONCRETE REINFORCEMENT
11/88

PART 1 GENERAL

1.1 REFERENCES

The publications listed below form a part of this specification to the extent referenced. The publications are referred to in the text by basic designation only.

ACI INTERNATIONAL (ACI)

ACI 318/318R	(1989; Rev 1992; Errata) Building Code Requirements for Reinforced Concrete

AMERICAN SOCIETY FOR TESTING AND MATERIALS (ASTM)

ASTM A 53	(1993a) Pipe, Steel, Black and Hot-Dipped, Zinc-Coated Welded and Seamless
ASTM A 82	(1994) Steel Wire, Plain, for Concrete Reinforcement
ASTM A 499	(1989) Steel Bars and Shapes, Carbon Rolled from "T" Rails
ASTM A 615	(1994) Deformed and Plain Billet-Steel Bars for Concrete Reinforcement
ASTM A 675	(1990a) Steel Bars, Carbon, Hot-Wrought, Special Quality, Mechanical Properties
ASTM A 706	(1993a) Low-Alloy Steel Deformed Bars for Concrete Reinforcement

AMERICAN WELDING SOCIETY (AWS)

AWS D1.4	(1992) Structural Welding Code - Reinforcing Steel

CONCRETE REINFORCING STEEL INSTITUTE (CRSI)

CRSI MSP-1	(1990) Manual of Standard Practice

1.2 SUBMITTALS

Government approval is required for submittals with a "GA" designation; submittals having an "FIO" designation are for information only. The following shall be submitted in accordance with Section 01300 SUBMITTAL PROCEDURES:

SD-04 Drawings

Concrete Reinforcement System; GA.

Detail drawings showing reinforcing steel schedules, sizes, grades, and splicing and bending details. Drawings shall show support details including types, sizes and spacing.

SD-08 Statements

Qualifications; FIO.

A list of names of qualified welders.

SD-13 Certificates

Reinforcing Steel; GA.

Certified copies of mill reports attesting that the reinforcing steel furnished meets the requirements specified, prior to the installation of reinforcing steel.

1.3 QUALIFICATIONS

Welders shall be qualified in accordance with AWS D1.4. Qualification test shall be performed at the worksite and the Contractor shall notify the Contracting Officer 24 hours prior to conducting tests. Special welding procedures and welders qualified by others may be accepted as permitted by AWS D1.4.

1.4 DELIVERY AND STORAGE

Reinforcement and accessories shall be stored off the ground on platforms, skids, or other supports.

PART 2 PRODUCTS

2.1 DOWELS

Dowels shall conform to ASTM A 675, Grade 80, or ASTM A 499. Steel pipe conforming to ASTM A 53, Schedule 80, may be used as dowels provided the ends are closed with metal or plastic inserts or with mortar.

2.2 REINFORCING STEEL

Reinforcing steel shall be deformed bars conforming to ASTM A 615 or ASTM A 706, grades and sizes as indicated. Cold drawn wire used for spiral reinforcement shall conform to ASTM A 82.

2.3 WIRE TIES

Wire ties shall be 16 gauge or heavier black annealed steel wire.

2.4 SUPPORTS

Bar supports for formed surfaces shall be designed and fabricated in accordance with CRSI MSP-1 and shall be steel or precast concrete blocks. Precast concrete blocks shall have wire ties and shall be not less than 4 inches square when supporting reinforcement on ground. Precast concrete block shall have compressive strength equal to that of the surrounding concrete. Where concrete formed surfaces will be exposed to weather or

where surfaces are to be painted, steel supports within 1/2 inch of concrete surface shall be galvanized, plastic protected or of stainless steel. Concrete supports used in concrete exposed to view shall have the same color and texture as the finish surface. For slabs on grade, supports shall be precast concrete blocks, plastic coated steel fabricated with bearing plates, or specifically designed wire-fabric supports fabricated of plastic.

PART 3 EXECUTION

3.1 REINFORCEMENT

Reinforcement shall be fabricated to shapes and dimensions shown and shall conform to the requirements of ACI 318/318R. Reinforcement shall be cold bent unless otherwise authorized. Bending may be accomplished in the field or at the mill. Bars shall not be bent after embedment in concrete. Safety caps shall be placed on all exposed ends of vertical concrete reinforcement bars that pose a danger to life safety. Wire tie ends shall face away from the forms.

3.1.1 Placement

Reinforcement shall be free from loose rust and scale, dirt, oil, or other deleterious coating that could reduce bond with the concrete. Reinforcement shall be placed in accordance with ACI 318/318R at locations shown plus or minus one bar diameter. Reinforcement shall not be continuous through expansion joints and shall be as indicated through construction or contraction joints. Concrete coverage shall be as indicated or as required by ACI 318/318R. If bars are moved more than one bar diameter to avoid interference with other reinforcement, conduits or embedded items, the resulting arrangement of bars, including additional bars required to meet structural requirements, shall be approved before concrete is placed.

3.1.2 Splicing

Splices of reinforcement shall conform to ACI 318/318R and shall be made only as required or indicated. Splicing shall be by lapping or by mechanical or welded butt connection; except that lap splices shall not be used for bars larger than No. 11 unless otherwise indicated. Welding shall conform to AWS D1.4. Welded butt splices shall be full penetration butt welds. Lapped bars shall be placed in contact and securely tied or spaced transversely apart to permit the embedment of the entire surface of each bar in concrete. Lapped bars shall not be spaced farther apart than one-fifth the required length of lap or 6 inches. Mechanical butt splices shall be in accordance with the recommendation of the manufacturer of the mechanical splicing device. Butt splices shall develop 125 percent of the specified minimum yield tensile strength of the spliced bars or of the smaller bar in transition splices. Bars shall be flame dried before butt splicing. Adequate jigs and clamps or other devices shall be provided to support, align, and hold the longitudinal centerline of the bars to be butt spliced in a straight line.

3.2 DOWELS

Dowels shall be installed in slabs on grade at locations indicated and at right angles to joint being doweled. Dowels shall be accurately positioned and aligned parallel to the finished concrete surface before concrete placement. Dowels shall be rigidly supported during concrete placement.

One end of dowels shall be coated with a bond breaker.

-- End of Section --

SECTION TABLE OF CONTENTS

DIVISION 03 - CONCRETE

SECTION 03250

EXPANSION JOINTS, CONTRACTION JOINTS, AND WATERSTOPS

07/95

PART 1 GENERAL

1.1 REFERENCES
1.2 SUBMITTALS
1.3 DELIVERY AND STORAGE

PART 2 PRODUCTS

2.1 CONTRACTION JOINT STRIPS
2.2 PREFORMED EXPANSION JOINT FILLER
2.3 SEALANT
2.3.1 Preformed Polychloroprene Elastomeric Type
2.3.2 Hot-Poured Type

PART 3 EXECUTION

3.1 JOINTS
3.1.1 Contraction Joints
3.1.1.1 Joint Strips
3.1.1.2 Sawed Joints
3.1.2 Expansion Joints
3.1.3 Joint Sealant
3.1.3.1 Joints With Preformed Compression Seals
3.1.3.2 Joints With Field-Molded Sealant
3.2 CONSTRUCTION JOINTS

-- End of Section Table of Contents --

SECTION 03250

EXPANSION JOINTS, CONTRACTION JOINTS, AND WATERSTOPS
07/95

PART 1 GENERAL

1.1 REFERENCES

The publications listed below form a part of this specification to the extent referenced. The publications are referred to in the text by basic designation only.

AMERICAN HARDBOARD ASSOCIATION (AHA)

AHA A135.4	(1982; R 1988) Basic Hardboard

AMERICAN SOCIETY FOR TESTING AND MATERIALS (ASTM)

ASTM C 919	(1984; R 1992) Standard Practice for Use of Sealants in Acoustical Applications
ASTM D 1190	(1974; R 1980) Concrete Joint Sealer, Hot-Poured Elastic Type
ASTM D 1191	(1984) Testing Concrete Joint Sealers
ASTM D 1751	(1983; R 1991) Preformed Expansion Joint Filler for Concrete Paving and Structural Construction (Nonextruding and Resilient Bituminous Types)
ASTM D 1752	(1984; R 1992) Preformed Sponge Rubber and Cork Expansion Joint Fillers for Concrete Paving and Structural Construction
ASTM D 2628	(1991) Preformed Polychloroprene Elastomeric Joint Seals for Concrete Pavements
ASTM D 5249	(1992) Backer Material for Use With Cold and Hot-Applied Joint Sealants in Portland-Cement Concrete and Asphalt Joints

1.2 SUBMITTALS

Government approval is required for submittals with a "GA" designation; submittals having an "FIO" designation are for information only. The following shall be submitted in accordance with Section 01300 SUBMITTAL PROCEDURES:

SD-01 Data

Preformed Expansion Joint Filler; FIO. Sealant; FIO.

Manufacturer's literature, including safety data sheets, for preformed fillers and the lubricants used in their installation; field-molded sealants and primers (when required by sealant manufacturer).

SD-06 Instructions

Preformed Expansion Joint Filler; FIO. Sealant; FIO.

Manufacturer's recommended instructions for installing preformed fillers, field-molded sealants.

SD-13 Certificates

Preformed Expansion Joint Filler; FIO. Sealant; FIO.

Certificates of compliance stating that the joint filler and sealant materials and waterstops conform to the requirements specified.

1.3 DELIVERY AND STORAGE

Material delivered and placed in storage shall be stored off the ground and protected from moisture, dirt, and other contaminants. Sealants shall be delivered in the manufacturer's original unopened containers. Sealants whose shelf life has expired shall be removed from the site.

PART 2 PRODUCTS

2.1 CONTRACTION JOINT STRIPS

Contraction joint strips shall be 1/8 inch thick tempered hardboard conforming to AHA A135.4, Class 1. In lieu of hardboard strips, rigid polyvinylchloride (PVC) or high impact polystyrene (HIPS) insert strips specifically designed to induce controlled cracking in slabs on grade may be used. Such insert strips shall have removable top section.

2.2 PREFORMED EXPANSION JOINT FILLER

Expansion joint filler shall be preformed material conforming to ASTM D 1751 or ASTM D 1752. Unless otherwise indicated, filler material shall be 3/8 inch thick and of a width applicable for the joint formed. Backer material, when required, shall conform to ASTM D 5249.

2.3 SEALANT

Joint sealant shall conform to the following:

2.3.1 Preformed Polychloroprene Elastomeric Type

ASTM D 2628.

2.3.2 Hot-Poured Type

ASTM D 1190 tested in accordance with ASTM D 1191.

PART 3 EXECUTION

3.1 JOINTS

Joints shall be installed at locations indicated and as authorized.

3.1.1 Contraction Joints

Contraction joints may be constructed by inserting tempered hardboard strips or rigid PVC or HIPS insert strips into the plastic concrete using a steel parting bar, when necessary, or by cutting the concrete with a saw after concrete has set. Joints shall be approximately 1/8 inch wide and shall extend into the slab one-fourth the slab thickness, minimum, but not less than 1 inch.

3.1.1.1 Joint Strips

Strips shall be of the required dimensions and as long as practicable. After the first floating, the concrete shall be grooved with a tool at the joint locations. The strips shall be inserted in the groove and depressed until the top edge of the vertical surface is flush with the surface of the slab. The slab shall be floated and finished as specified. Working of the concrete adjacent to the joint shall be the minimum necessary to fill voids and consolidate the concrete. Where indicated, the top portion of the strip shall be sawed out after the curing period to form a recess for sealer. The removable section of PVC or HIPS strips shall be discarded and the insert left in place. Means shall be provided to insure true alignment of the strips is maintained during insertion.

3.1.1.2 Sawed Joints

Joint sawing shall be early enough to prevent uncontrolled cracking in the slab, but late enough that this can be accomplished without appreciable spalling. Concrete sawing machines shall be adequate in number and power, and with sufficient replacement blades to complete the sawing at the required rate. Joints shall be cut to true alignment and shall be cut in sequence of concrete placement. Sludge and cutting debris shall be removed.

3.1.2 Expansion Joints

Preformed expansion joint filler shall be used in expansion and isolation joints in slabs around columns and between slabs on grade and vertical surfaces where indicated. The filler shall extend the full slab depth, unless otherwise indicated. The edges of the joint shall be neatly finished with an edging tool of 1/8 inch radius, except where a resilient floor surface will be applied. Where the joint is to receive a sealant, the filler strips shall be installed at the proper level below the finished floor with a slightly tapered, dressed and oiled wood strip temporarily secured to the top thereof to form a recess to the size shown on the drawings. The wood strip shall be removed after the concrete has set. Contractor may opt to use a removable expansion filler cap designed and fabricated for this purpose in lieu of the wood strip. The groove shall be thoroughly cleaned of laitance, curing compound, foreign materials, protrusions of hardened concrete, and any dust which shall be blown out of the groove with oil-free compressed air.

3.1.3 Joint Sealant

Sawed contraction joints and expansion joints in slabs shall be filled with joint sealant, unless otherwise shown. Joint surfaces shall be clean, dry, and free of oil or other foreign material which would adversely affect the bond between sealant and concrete. Joint sealant shall be applied as recommended by the manufacturer of the sealant.

3.1.3.1 Joints With Preformed Compression Seals

Compression seals shall be installed with equipment capable of installing joint seals to the prescribed depth without cutting, nicking, twisting, or otherwise distorting or damaging the seal or concrete and with no more than 5 percent stretching of the seal. The sides of the joint and, if necessary, the sides of the compression seal shall be covered with a coating of lubricant. Butt joints shall be coated with liberal applications of lubricant.

3.1.3.2 Joints With Field-Molded Sealant

Joints shall not be sealed when the sealant material, ambient air, or concrete temperature is less than 40 degrees F. When the sealants are meant to reduce the sound transmission characteristics of interior walls, ceilings, and floors the guidance provided in ASTM C 919 shall be followed. Joints requiring a bond breaker shall be coated with curing compound or with bituminous paint. Bond breaker and back-up material shall be installed where required. Joints shall be primed and filled flush with joint sealant in accordance with the manufacturer's recommendations.

3.2 CONSTRUCTION JOINTS

Construction joints are specified in Section 03300 CONCRETE FOR BUILDING CONSTRUCTION except that construction joints coinciding with expansion and contraction joints shall be treated as expansion or contraction joints as applicable.

-- End of Section --

SECTION TABLE OF CONTENTS

DIVISION 03 - CONCRETE

SECTION 03300

CAST-IN-PLACE STRUCTURAL CONCRETE

09/95

PART 1 GENERAL

1.1 REFERENCES
1.2 SUBMITTALS
1.3 QUALIFICATIONS
1.3.1 GENERAL REQUIREMENTS
1.3.2 Tolerances
1.3.2.1 Floors by the Straightedge System
1.3.3 Strength Requirements and w/c Ratio
1.3.3.1 Strength Requirements
1.3.4 Air Entrainment
1.3.5 Slump
1.3.6 Concrete Temperature
1.3.7 Size of Coarse Aggregate
1.4 MIXTURE PROPORTIONS
1.4.1 Proportioning Studies for Normal Weight Concrete
1.4.2 Average Compressive Strength Required for Mixtures
1.4.2.1 Computations from Test Records
1.4.2.2 Computations without Previous Test Records
1.5 STORAGE OF MATERIALS
1.6 GOVERNMENT ASSURANCE INSPECTION AND TESTING
1.6.1 Materials
1.6.2 Fresh Concrete
1.6.3 Inspection

PART 2 PRODUCTS

2.1 CEMENTITIOUS MATERIALS
2.1.1 Portland Cement
2.1.2 Pozzolan (Fly Ash)
2.2 AGGREGATES
2.2.1 Fine Aggregate
2.2.2 Coarse Aggregate
2.3 CHEMICAL ADMIXTURES
2.3.1 Air-Entraining Admixture
2.3.2 Other Chemical Admixtures
2.4 CURING MATERIALS
2.4.1 Impervious-Sheet
2.4.2 Membrane-Forming Compound
2.4.3 Burlap and Cotton Mat
2.5 WATER
2.6 NONSHRINK GROUT
2.7 LATEX BONDING AGENT
2.8 EPOXY RESIN
2.9 EMBEDDED ITEMS
2.10 PERIMETER INSULATION

2.11 VAPOR BARRIER
2.12 JOINT MATERIALS
2.12.1 Joint Fillers, and Sealers
2.12.2 Contraction Joints in Slabs

PART 3 EXECUTION

3.1 PREPARATION FOR PLACING
3.1.1 Foundations
3.1.1.1 Concrete on Earth Foundations
3.1.1.2 Preparation of Rock
3.1.1.3 Excavated Surfaces in Lieu of Forms
3.1.2 Previously Placed Concrete
3.1.2.1 Air-Water Cutting
3.1.2.2 High-Pressure Water Jet
3.1.2.3 Wet Sandblasting
3.1.2.4 Waste Disposal
3.1.2.5 Preparation of Previously Placed Concrete
3.1.3 Vapor Barrier
3.1.4 Perimeter Insulation
3.1.5 Embedded Items
3.2 CONCRETE PRODUCTION
3.2.1 Batching, Mixing, and Transporting Concrete
3.2.1.1 General
3.2.1.2 Batching Equipment
3.2.1.3 Scales
3.2.1.4 Batching Tolerances
3.2.1.5 Moisture Control
3.2.1.6 Concrete Mixers
3.2.1.7 Stationary Mixers
3.2.1.8 Truck Mixers
3.3 TRANSPORTING CONCRETE TO PROJECT SITE
3.4 CONVEYING CONCRETE ON SITE
3.4.1 Buckets
3.4.2 Transfer Hoppers
3.4.3 Trucks
3.4.4 Chutes
3.4.5 Belt Conveyors
3.4.6 Concrete Pumps
3.5 PLACING CONCRETE
3.5.1 Depositing Concrete
3.5.2 Consolidation
3.5.3 Cold Weather Requirements
3.5.4 Hot Weather Requirements
3.5.5 Prevention of Plastic Shrinkage Cracking
3.5.6 Placing Concrete in Congested Areas
3.5.7 Placing Flowable Concrete
3.6 JOINTS
3.6.1 Construction Joints
3.6.2 Contraction Joints in Slabs on Grade
3.6.3 Expansion Joints
3.6.4 Dowels and Tie Bars
3.7 FINISHING FORMED SURFACES
3.7.1 Class B Finish
3.7.2 Class D Finish
3.8 REPAIRS
3.8.1 Damp-Pack Mortar Repair
3.8.2 Repair of Major Defects
3.8.2.1 Surface Application of Mortar Repair

3.8.2.2 Repair of Deep and Large Defects
3.8.3 Resinous and Latex Material Repair
3.9 FINISHING UNFORMED SURFACES
3.9.1 General
3.9.2 Floated Finish
3.9.3 Troweled Finish
3.10 EXTERIOR SLAB AND RELATED ITEMS
3.10.1 Pavements
3.10.2 Pits and Trenches
3.10.3 Non-Slip Finish
3.10.3.1 Broomed
3.11 CURING AND PROTECTION
3.11.1 General
3.11.2 Moist Curing
3.11.3 Membrane Forming Curing Compounds
3.11.4 Impervious Sheeting
3.11.5 Ponding or Immersion
3.11.6 Cold Weather Curing and Protection
3.12 SETTING BASE PLATES AND BEARING PLATES
3.12.1 Damp-Pack Bedding Mortar
3.12.2 Nonshrink Grout
3.12.2.1 Mixing and Placing of Nonshrink Grout
3.12.2.2 Treatment of Exposed Surfaces
3.13 TESTING AND INSPECTION FOR CONTRACTOR QUALITY CONTROL
3.13.1 Grading and Corrective Action
3.13.1.1 Fine Aggregate
3.13.1.2 Coarse Aggregate
3.13.2 Quality of Aggregates
3.13.3 Scales, Batching and Recording
3.13.4 Batch-Plant Control
3.13.5 Concrete Mixture
3.13.6 Inspection Before Placing
3.13.7 Placing
3.13.8 Vibrators
3.13.9 Curing Inspection
3.13.10 Cold-Weather Protection
3.13.11 Mixer Uniformity
3.13.12 Reports

-- End of Section Table of Contents --

SECTION 03300

CAST-IN-PLACE STRUCTURAL CONCRETE
09/95

PART 1 GENERAL

1.1 REFERENCES

The publications listed below form a part of this specification to the extent referenced. The publications are referred to in the text by basic designation only.

AMERICAN ASSOCIATION OF STATE HIGHWAY AND TRANSPORTATION OFFICIALS (AASHTO)

AASHTO M 182	(1991I) Burlap Cloth Made From Jute or Kenaf

AMERICAN CONCRETE INSTITUTE (ACI)

ACI 117/A117R	(1990; Errata) Standard Tolerances for Concrete Construction and Materials
ACI 211.1	(1991) Standard Practice for Selecting Proportions for Normal, Heavyweight, and Mass Concrete
ACI 214.3R	(1988) Simplified Version of the Recommended Practice for Evaluation of Strength Test Results of Concrete
ACI 305R	(1991) Hot Weather Concreting
ACI 318/318R	(1989; Rev 1992; Errata) Building Code Requirements for Reinforced Concrete

AMERICAN SOCIETY FOR TESTING AND MATERIALS (ASTM)

ASTM C 31	(1991) Making and Curing Concrete Test Specimens in the Field
ASTM C 33	(1993) Concrete Aggregates
ASTM C 39	(1993a) Compressive Strength of Cylindrical Concrete Specimens
ASTM C 42	(1990) Obtaining and Testing Drilled Cores and Sawed Beams of Concrete
ASTM C 78	(1994) Flexural Strength of Concrete (Using Simple Beam With Third-Point Loading)
ASTM C 94	(1994) Ready-Mixed Concrete

ASTM C 136	(1993) Sieve Analysis of Fine and Coarse Aggregates
ASTM C 143	(1990a) Slump of Hydraulic Cement Concrete
ASTM C 150	(1994) Portland Cement
ASTM C 171	(1992) Sheet Materials for Curing Concrete
ASTM C 172	(1990) Sampling Freshly Mixed Concrete
ASTM C 173	(1994a) Air Content of Freshly Mixed Concrete by the Volumetric Method
ASTM C 192	(1990a) Making and Curing Concrete Test Specimens in the Laboratory
ASTM C 231	(1991b) Air Content of Freshly Mixed Concrete by the Pressure Method
ASTM C 260	(1994) Air-Entraining Admixtures for Concrete
ASTM C 309	(1993) Liquid Membrane-Forming Compounds for Curing Concrete
ASTM C 494	(1992) Chemical Admixtures for Concrete
ASTM C 578	(1992) Rigid, Cellular Polystyrene Thermal Insulation
ASTM C 618	(1994) Coal Fly Ash and Raw or Calcined Natural Pozzolan for Use as a Mineral Admixture in Portland Cement Concrete
ASTM C 881	(1990) Epoxy-Resin-Base Bonding Systems for Concrete
ASTM C 940	(1989) Expansion and Bleeding of Freshly Mixed Grouts for Preplaced-Aggregate Concrete in the Laboratory
ASTM C 1017	(1992) Chemical Admixtures for Use in Producing Flowing Concrete
ASTM C 1059	(1991) Latex Agents for Bonding Fresh to Hardened Concrete
ASTM C 1064	(1986, R 1993) Temperature of Freshly Mixed Portland Cement Concrete
ASTM C 1077	(1995) Standard Practice for Laboratories Testing Concrete and Concrete Aggregates for Use in Construction and Criteria for Laboratory Evaluation
ASTM C 1107	(1991a) Packaged Dry, Hydraulic-Cement Grout (Nonshrink)

ASTM D 75	(1987; R 1992) Sampling Aggregates
ASTM D 1751	(1983; R 1991) Preformed Expansion Joint Filler for Concrete Paving and Structural Construction (Nonextruding and Resilient Bituminous Types)
ASTM D 1752	(1984; R 1992) Preformed Sponge Rubber and Cork Expansion Joint Fillers for Concrete Paving and Structural Construction

CORPS OF ENGINEERS (COE)

COE CRD-C 94	(1995) Surface Retarders
COE CRD-C 104	(1980) Method of Calculation of the Fineness Modulus of Aggregate
COE CRD-C 400	(1963) Requirements for Water for Use in Mixing or Curing Concrete
COE CRD-C 521	(1981) Standard Test Method for Frequency and Amplitude of Vibrators for Concrete
COE CRD-C 540	(1971; R 1981) Standard Specification for Nonbituminous Inserts for Contraction Joints in Portland Cement Concrete Airfield Pavements, Sawable Type
COE CRD-C 572	(1974) Corps of Engineers Specifications for Polyvinylchloride Waterstop

NATIONAL INSTITUTE OF STANDARDS AND TECHNOLOGY (NIST)

NIST HB 44	(1994) NIST Handbook 44: Specifications, Tolerances, and Other Technical Requirements for Weighing and Measuring Devices

NATIONAL READY-MIXED CONCRETE ASSOCIATION (NRMCA)

NRMCA-01	(1992) Truck Mixer Agitator and Front Discharge Concrete Carrier Standards of the Truck Mixer Manufacturers Bureau
NRMCA CPMB 100	(1990) Concrete Plant Standards
NRMCA QC 3	(1984) Quality Control Manual: Section 3, Plant Certifications Checklist: Certification of Ready Mixed Concrete Production Facilities

1.2 SUBMITTALS

Government approval is required for submittals with a "GA" designation; submittals having an "FIO" designation are for information only. The following shall be submitted in accordance with Section 01300 SUBMITTAL PROCEDURES:

SD-08 Statements

Mixture Proportions; GA.

The results of trial mixture design studies along with a statement giving the maximum nominal coarse aggregate size and the proportions of ingredients that will be used in the manufacture of each strength or class of concrete, at least 14 days prior to commencing concrete placing operations. Aggregate weights shall be based on the saturated surface dry condition. The statement shall be accompanied by test results from an approved independent commercial testing laboratory, showing that mixture design studies have been made with materials proposed for the project and that the proportions selected will produce concrete of the qualities indicated. No substitutions shall be made in the materials used in the mixture design studies without additional tests to show that the quality of the concrete is satisfactory.

SD-09 Reports

Testing and Inspection for Contractor Quality Control; FIO.

Certified copies of laboratory test reports, including mill tests and all other test data, for portland cement, blended cement, pozzolan, silica fume, aggregate, admixtures, and curing compound proposed for use on this project.

SD-13 Certificates

Qualifications; FIO.

Written documentation for Contractor Quality Control personnel.

1.3 QUALIFICATIONS

Contractor Quality Control personnel assigned to concrete construction shall be American Concrete Institute (ACI) Certified Workmen in one of the following grades or shall have written evidence of having completed similar qualification programs:

Concrete Field Testing Technician, Grade I
Concrete Laboratory Testing Technician, Grade I or II
Concrete Construction Inspector, Level II

The foreman or lead journeyman of the flatwork finishing crew shall have similar qualification for ACI Concrete Flatwork Technician/Finisher or equal, with written documentation.

1.3.1 GENERAL REQUIREMENTS

1.3.2 Tolerances

Except as otherwise specified herein, tolerances for concrete batching, mixture properties, and construction as well as definition of terms and application practices shall be in accordance with ACI 117/A117R. Level and grade tolerance measurements of slabs shall be made as soon as possible after finishing; when forms or shoring are used, the measurements shall be made prior to removal.

1.3.2.1 Floors by the Straightedge System

The flatness of the floors shall be carefully controlled and the tolerances shall be measured by the straightedge system as specified in paragraph 4.5.7 of ACI 117/A117R, using a 10 foot straightedge, within 72 hours after floor slab installation and before shores and/or forms are removed. The listed tolerances shall be met at any and every location at which the straightedge can be placed.

Float Finish at depressed slabs.
Trowel Finish at all other locations.

1.3.3 Strength Requirements and w/c Ratio

1.3.3.1 Strength Requirements

Specified compressive strength (f'c) shall be as indicated on the Drawings.

Concrete made with high-early strength cement shall have a 7-day strength equal to the specified 28-day strength for concrete made with Type I portland cement. Compressive strength shall be determined in accordance with ASTM C 39.

a. Evaluation of Concrete Compressive Strength. Compressive strength specimens (6 by 12 inch cylinders) shall be fabricated by the Contractor and laboratory cured in accordance with ASTM C 31 and tested in accordance with ASTM C 39. The strength of the concrete will be considered satisfactory so long as the average of all sets of three consecutive test results equals or exceeds the specified compressive strength f'c and no individual test result falls below the specified strength f'c by more than 500 psi. A "test" is defined as the average of two companion cylinders, or if only one cylinder is tested, the results of the single cylinder test. Additional analysis or testing, including taking cores and/or load tests may be required at the Contractor's expense when the strength of the concrete in the structure is considered potentially deficient.

b. Investigation of Low-Strength Compressive Test Results. When any strength test of standard-cured test cylinders falls below the specified strength requirement by more than 500 psi or if tests of field-cured cylinders indicate deficiencies in protection and curing, steps shall be taken to assure that the load-carrying capacity of the structure is not jeopardized. When the strength of concrete in place is considered potentially deficient, cores shall be obtained and tested in accordance with ASTM C 42. At least three representative cores shall be taken from each member or area of concrete in place that is considered potentially deficient. The location of cores will be determined by the Contracting Officer to least impair the strength of the structure. Concrete in the area represented by the core testing will be considered adequate if the average strength of the cores is equal to at least 85 percent of the specified strength requirement and if no single core is less than 75 percent of the specified strength requirement. Non-destructive tests (tests other than test cylinders or cores) shall not be used as a basis for acceptance or rejection. The Contractor shall perform the coring

and repair the holes. Cores will be tested by the Government.

c. Load Tests. If the core tests are inconclusive or impractical to obtain or if structural analysis does not confirm the safety of the structure, load tests may be directed by the Contracting Officer in accordance with the requirements of ACI 318/318R. Concrete work evaluated by structural analysis or by results of a load test as being understrength shall be corrected in a manner satisfactory to the Contracting Officer. All investigations, testing, load tests, and correction of deficiencies shall be performed by and at the expense of the Contractor and must be approved by the Contracting Officer, except that if all concrete is found to be in compliance with the drawings and specifications, the cost of investigations, testing, and load tests will be at the expense of the Government.

1.3.4 Air Entrainment

All normal weight concrete shall be air entrained to contain between 4 and 7 percent total air, except that when the nominal maximum size coarse aggregate is 3/4 inch or smaller it shall be between 4.5 and 7.5 percent. Specified air content shall be attained at point of placement into the forms. Air content for normal weight concrete shall be determined in accordance with ASTM C 231.

1.3.5 Slump

Slump of the concrete, as delivered to the point of placement into the forms, shall be within the following limits. Slump shall be determined in accordance with ASTM C 143.

Structural Element	Slump Minimum	Slump Maximum
Foundation walls, substructure walls, footings, slabs	1 in.	3 in.
Any structural concrete approved for placement by pumping:		
At pump	2 in.	6 in.
At discharge of line	1 in.	4 in.

1.3.6 Concrete Temperature

The temperature of the concrete as delivered shall not exceed 90 degrees F. When the ambient temperature during placing is 40 degrees F or less, or is expected to be at any time within 6 hours after placing, the temperature of the concrete as delivered shall be between 55 and 75 degrees F.

1.3.7 Size of Coarse Aggregate

The largest feasible nominal maximum size aggregate (NMSA) specified in paragraph AGGREGATES shall be used in each placement. However, nominal maximum size of aggregate shall not exceed any of the following: three-fourths of the minimum cover for reinforcing bars, three-fourths of the minimum clear spacing between reinforcing bars, one-fifth of the narrowest dimension between sides of forms, or one-third of the thickness

of slabs or toppings.

1.4 MIXTURE PROPORTIONS

Concrete shall be composed of portland cement, other cementitious and pozzolanic materials as specified, aggregates, water and admixtures as specified.

1.4.1 Proportioning Studies for Normal Weight Concrete

Trial design batches, mixture proportioning studies, and testing requirements for various classes and types of concrete specified shall be the responsibility of the Contractor. Strength of concrete, mixture proportions shall be based on compressive strength as determined by test specimens fabricated in accordance with ASTM C 192 and tested in accordance with ASTM C 39. Samples of all materials used in mixture proportioning studies shall be representative of those proposed for use in the project and shall be accompanied by the manufacturer's or producer's test reports indicating compliance with these specifications. Trial mixtures having proportions, consistencies, and air content suitable for the work shall be made based on methodology described in ACI 211.1, using at least three different water-cement ratios for each type of mixture, which will produce a range of strength encompassing those required for each class and type of concrete required on the project. The maximum water-cement ratios required in the paragraph Maximum Allowable w/c Ratio will be the equivalent water-cement ratio as determined by conversion from the weight ratio of water to cement plus pozzolan, silica fume, by the weight equivalency method as described in ACI 211.1. In the case where silica fume is used, the weight of the silica fume shall be included in the equations in ACI 211.1 for the term P, which is used to denote the weight of pozzolan. If pozzolan is used in the concrete mixture, the minimum pozzolan content shall be 15 percent by weight of the total cementitious material, and the maximum shall be 35 percent. Laboratory trial mixtures shall be designed for maximum permitted slump and air content. Separate sets of trial mixture studies shall be made for each combination of cementitious materials and each combination of admixtures proposed for use. No combination of either shall be used until proven by such studies, except that, if approved in writing and otherwise permitted by these specifications, an accelerator or a retarder may be used without separate trial mixture study. Separate trial mixture studies shall also be made for concrete for any conveying or placing method proposed which requires special properties and for concrete to be placed in unusually difficult placing locations. The temperature of concrete in each trial batch shall be reported. For each water-cement ratio, at least three test cylinders for each test age shall be made and cured in accordance with ASTM C 192. They shall be tested at 7 and 28 days in accordance with ASTM C 39. From these test results, a curve shall be plotted showing the relationship between water-cement ratio and strength for each set of trial mix studies. In addition, a curve shall be plotted showing the relationship between 7 day and 28 day strengths. Each mixture shall be designed to promote easy and suitable concrete placement, consolidation and finishing, and to prevent segregation and excessive bleeding.

1.4.2 Average Compressive Strength Required for Mixtures

The mixture proportions selected during mixture design studies shall produce a required average compressive strength (f'cr) exceeding the specified compressive strength (f'c) by the amount indicated below. This required average compressive strength, f'cr, will not be a required

acceptance criteria during concrete production. However, whenever the daily average compressive strength at 28 days drops below f'cr during concrete production, or daily average 7-day strength drops below a strength correlated with the 28-day f'cr, the mixture shall be adjusted, as approved, to bring the daily average back up to f'cr. During production, the required f'cr shall be adjusted, as appropriate, based on the standard deviation being attained on the job.

1.4.2.1 Computations from Test Records

Where a concrete production facility has test records, a standard deviation shall be established in accordance with the applicable provisions of ACI 214.3R. Test records from which a standard deviation is calculated shall represent materials, quality control procedures, and conditions similar to those expected; shall represent concrete produced to meet a specified strength or strengths (f'c) within 1,000 psi of that specified for proposed work; and shall consist of at least 30 consecutive tests. A strength test shall be the average of the strengths of two cylinders made from the same sample of concrete and tested at 28 days. Required average compressive strength f'cr used as the basis for selection of concrete proportions shall be the larger of the equations that follow using the standard deviation as determined above:

f'cr = f'c + 1.34S

f'cr = f'c + 2.33S - 500

Where S = standard deviation

Where a concrete production facility does not have test records meeting the requirements above but does have a record based on 15 to 29 consecutive tests, a standard deviation shall be established as the product of the calculated standard deviation and a modification factor from the following table:

NUMBER OF TESTS	MODIFICATION FACTOR FOR STANDARD DEVIATION
15	1.16
20	1.08
25	1.03
30 or more	1.00

1.4.2.2 Computations without Previous Test Records

When a concrete production facility does not have sufficient field strength test records for calculation of the standard deviation, the required average strength f'cr shall be determined as follows:

a. If the specified compressive strength f'c is less than 3,000 psi,

f'cr = f'c + 1000 psi

b. If the specified compressive strength f'c is 3,000 to 5,000 psi,

f'cr = f'c + 1,200 psi

c. If the specified compressive strength f'c is over 5,000 psi,

$f'cr = f'c + 1,400$ psi

1.5 STORAGE OF MATERIALS

Cement and other cementitious materials shall be stored in weathertight buildings, bins, or silos which will exclude moisture and contaminants and keep each material completely separated. Aggregate stockpiles shall be arranged and used in a manner to avoid excessive segregation and to prevent contamination with other materials or with other sizes of aggregates. Aggregate shall not be stored directly on ground unless a sacrificial layer is left undisturbed. Reinforcing bars and accessories shall be stored above the ground on platforms, skids or other supports. Other materials shall be stored in such a manner as to avoid contamination and deterioration. Admixtures which have been in storage at the project site for longer than 6 months or which have been subjected to freezing shall not be used unless retested and proven to meet the specified requirements. Materials shall be capable of being accurately identified after bundles or containers are opened.

1.6 GOVERNMENT ASSURANCE INSPECTION AND TESTING

Day-to day inspection and testing shall be the responsibility of the Contractor Quality Control (CQC) staff. However, representatives of the Contracting Officer can and will inspect construction as considered appropriate and will monitor operations of the Contractor's CQC staff. Government inspection or testing will not relieve the Contractor of any of his CQC responsibilities.

1.6.1 Materials

The Government will sample and test aggregates, cementitious materials, other materials, and concrete to determine compliance with the specifications as considered appropriate. The Contractor shall provide facilities and labor as may be necessary for procurement of representative test samples. Samples of aggregates will be obtained at the point of batching in accordance with ASTM D 75. Other materials will be sampled from storage at the jobsite or from other locations as considered appropriate. Samples may be placed in storage for later testing when appropriate.

1.6.2 Fresh Concrete

Fresh concrete will be sampled as delivered in accordance with ASTM C 172 and tested in accordance with these specifications, as considered necessary.

1.6.3 Inspection

Concrete operations may be tested and inspected by the Government as the project progresses. Failure to detect defective work or material will not prevent rejection later when a defect is discovered nor will it obligate the Government for final acceptance.

PART 2 PRODUCTS

2.1 CEMENTITIOUS MATERIALS

Cementitious Materials shall be portland cement, portland-pozzolan cement, or portland cement in combination with pozzolan or silica fume and shall

conform to appropriate specifications listed below. Use of cementitious materials in concrete which will have surfaces exposed in the completed structure shall be restricted so there is no change in color, source, or type of cementitious material.

2.1.1 Portland Cement

ASTM C 150, Type II, low alkali.

2.1.2 Pozzolan (Fly Ash)

ASTM C 618, Class F with the optional requirements for multiple factor, drying shrinkage, and uniformity from Table 2A of ASTM C 618. Requirement for maximum alkalies from Table 1A of ASTM C 618 shall apply. If pozzolan is used, it shall never be exceed 20 percent by weight of the total cementitious material.

2.2 AGGREGATES

Aggregates shall conform to the following.

2.2.1 Fine Aggregate

Fine aggregate shall conform to the quality and gradation requirements of ASTM C 33.

2.2.2 Coarse Aggregate

Coarse aggregate shall conform to ASTM C 33, Class 5S, size designation 57.

Coarse Aggregate

Sieve Size	Cumulative Percent By Weight Passing
3/4 in.	100
1/2 in.	50-100
3/8 in.	25-50
No. 4	0-15
No. 8	0-8

Fine Aggregate

Sieve Size	Cumulative Percent By Weight Passing
3/8 in.	100
No. 4	95-100
No. 8	65-80
No. 16	45-65
No. 30	25-45
No. 50	5-15
No. 100	0-5

2.3 CHEMICAL ADMIXTURES

Chemical admixtures, when required or permitted, shall conform to the

appropriate specification listed. Admixtures shall be furnished in liquid form and of suitable concentration for easy, accurate control of dispensing.

2.3.1 Air-Entraining Admixture

ASTM C 260 and shall consistently entrain the air content in the specified ranges under field conditions.

2.3.2 Other Chemical Admixtures

Chemical admixtures for use in producing flowing concrete shall comply with ASTM C 1017, Type I or II. These admixtures shall be used only when approved in writing, such approval being contingent upon particular mixture control as described in the Contractor's Quality Control Plan and upon performance of separate mixture design studies.

2.4 CURING MATERIALS

2.4.1 Impervious-Sheet

Impervious-sheet materials shall conform to ASTM C 171, type optional, except, that polyethylene sheet shall not be used.

2.4.2 Membrane-Forming Compound

Membrane-Forming curing compound shall conform to ASTM C 309, Type 1-D or 2, except that only a styrene acrylate or chlorinated rubber compound meeting Class B requirements shall be used for surfaces that are to be painted or are to receive bituminous roofing, or waterproofing, or floors that are to receive adhesive applications of resilient flooring. The curing compound selected shall be compatible with any subsequent paint, roofing, waterproofing, or flooring specified. Nonpigmented compound shall contain a fugitive dye, and shall have the reflective requirements in ASTM C 309 waived.

2.4.3 Burlap and Cotton Mat

Burlap and cotton mat used for curing shall conform to AASHTO M 182.

2.5 WATER

Water for mixing and curing shall be fresh, clean, potable, and free of injurious amounts of oil, acid, salt, or alkali, except that non-potable water may be used if it meets the requirements of COE CRD-C 400.

2.6 NONSHRINK GROUT

Nonshrink grout shall conform to ASTM C 1107, Grade A B C, and shall be a commercial formulation suitable for the proposed application.

2.7 LATEX BONDING AGENT

Latex agents for bonding fresh to hardened concrete shall conform to ASTM C 1059.

2.8 EPOXY RESIN

Epoxy resins for use in repairs shall conform to ASTM C 881, Type V, Grade 2. Class as appropriate to the existing ambient and surface temperatures.

2.9 EMBEDDED ITEMS

Embedded items shall be of the size and type indicated or as needed for the application. Dovetail slots shall be galvanized steel. Inserts for shelf angles and bolt hangers shall be of malleable iron or cast or wrought steel.

2.10 PERIMETER INSULATION

Perimeter insulation shall be extruded polystyrene conforming to ASTM C 578, Type IV.

2.11 VAPOR BARRIER

Vapor barrier shall be polyethylene sheeting with a minimum thickness of 20 mils.

2.12 JOINT MATERIALS

2.12.1 Joint Fillers, and Sealers

Expansion joint fillers shall be preformed materials conforming to ASTM D 1751 ASTM D 1752. Materials for waterstops shall be in accordance with Section 03250 EXPANSION JOINTS, CONSTRUCTION JOINTS, AND WATERSTOPS. Materials for and sealing of joints shall conform to the requirements of Section 07920 JOINT SEALING.

2.12.2 Contraction Joints in Slabs

Sawable type contraction joint inserts shall conform to COE CRD-C 540. Nonsawable joint inserts shall have sufficient stiffness to permit placement in plastic concrete without undue deviation from a straight line and shall conform to the physical requirements of COE CRD-C 540, with the exception of Section 3.4 "Resistance to Sawing". Plastic inserts shall be polyvinyl chloride conforming to the materials requirements of COE CRD-C 572.

PART 3 EXECUTION

3.1 PREPARATION FOR PLACING

Before commencing concrete placement, the following shall be performed. Surfaces to receive concrete shall be clean and free from frost, ice, mud, and water. Forms shall be in place, cleaned, coated, and adequately supported, in accordance with Section 03100 STRUCTURAL CONCRETE FORMWORK. Reinforcing steel shall be in place, cleaned, tied, and adequately supported, in accordance with Section 03200 CONCRETE REINFORCEMENT. Transporting and conveying equipment shall be in-place, ready for use, clean, and free of hardened concrete and foreign material. Equipment for consolidating concrete shall be at the placing site and in proper working order. Equipment and material for curing and for protecting concrete from weather or mechanical damage shall be at the placing site, in proper working condition and in sufficient amount for the entire placement. When hot, windy conditions during concreting appear probable, equipment and material shall be at the placing site to provide windbreaks, shading, fogging, or other action to prevent plastic shrinkage cracking or other damaging drying of the concrete.

3.1.1 Foundations

3.1.1.1 Concrete on Earth Foundations

Earth (subgrade, base, or subbase courses) surfaces upon which concrete is to be placed shall be clean, damp, and free from debris, frost, ice, and standing or running water. Prior to placement of concrete, the foundation shall be well drained and shall be satisfactorily graded and uniformly compacted.

3.1.1.2 Preparation of Rock

Rock surfaces upon which concrete is to be placed shall be free from oil, standing or running water, ice, mud, drummy rock, coating, debris, and loose, semidetached or unsound fragments. Joints in rock shall be cleaned to a satisfactory depth, as determined by the Contracting Officer, and to firm rock on the sides. Immediately before the concrete is placed, rock surfaces shall be cleaned thoroughly by the use of air-water jets or sandblasting as specified below for Previously Placed Concrete. Rock surfaces shall be kept continuously moist for at least 24 hours immediately prior to placing concrete thereon. All horizontal and approximately horizontal surfaces shall be covered, immediately before the concrete is placed, with a layer of mortar proportioned similar to that in the concrete mixture. Concrete shall be placed before the mortar stiffens.

3.1.1.3 Excavated Surfaces in Lieu of Forms

Concrete for footings may be placed directly against the soil provided the earth or rock has been carefully trimmed, is uniform and stable, and meets the compaction requirements of Section 02221 EXCAVATION, FILLING, AND BACKFILLING FOR BUILDINGS. The concrete shall be placed without becoming contaminated by loose material, and the outline of the concrete shall be within the specified tolerances.

3.1.2 Previously Placed Concrete

Concrete surfaces to which additional concrete is to be bonded shall be prepared for receiving the next horizontal lift by cleaning the construction joint surface with either air-water cutting, sandblasting, high-pressure water jet, or other approved method. Concrete at the side of vertical construction joints shall be prepared as approved by the Contracting Officer. Air-water cutting shall not be used on formed surfaces or surfaces congested with reinforcing steel. Regardless of the method used, the resulting surfaces shall be free from all laitance and inferior concrete so that clean surfaces of well bonded coarse aggregate are exposed and make up at least 10-percent of the surface area, distributed uniformly throughout the surface. The edges of the coarse aggregate shall not be undercut. The surface of horizontal construction joints shall be kept continuously wet for the first 12 hours during the 24-hour period prior to placing fresh concrete. The surface shall be washed completely clean as the last operation prior to placing the next lift. For heavy duty floors and two-course floors a thin coat of neat cement grout of about the consistency of thick cream shall be thoroughly scrubbed into the existing surface immediately ahead of the topping placing. The grout shall be a 1:1 mixture of portland cement and sand passing the No. 8 sieve. The topping concrete shall be deposited before the grout coat has had time to stiffen.

3.1.2.1 Air-Water Cutting

Air-water cutting of a fresh concrete surface shall be performed at the

proper time and only on horizontal construction joints. The air pressure used in the jet shall be 100 psi plus or minus, 10 psi, and the water pressure shall be just sufficient to bring the water into effective influence of the air pressure. When approved by the Contracting Officer, a surface retarder complying with the requirements of COE CRD-C 94 may be applied to the surface of the lift in order to prolong the period of time during which air-water cutting is effective. After cutting, the surface shall be washed and rinsed as long as there is any trace of cloudiness of the wash water. Where necessary to remove accumulated laitance, coatings, stains, debris, and other foreign material, high-pressure waterjet or sandblasting shall be used as the last operation before placing the next lift.

3.1.2.2 High-Pressure Water Jet

A stream of water under a pressure of not less than 3,000 psi shall be used for cutting and cleaning. Its use shall be delayed until the concrete is sufficiently hard so that only the surface skin or mortar is removed and there is no undercutting of coarse-aggregate particles. If the waterjet is incapable of a satisfactory cleaning, the surface shall be cleaned by sandblasting.

3.1.2.3 Wet Sandblasting

Wet sandblasting shall be used after the concrete has reached sufficient strength to prevent undercutting of the coarse aggregate particles. After wet sandblasting, the surface of the concrete shall then be washed thoroughly to remove all loose materials.

3.1.2.4 Waste Disposal

The method used in disposing of waste water employed in cutting, washing, and rinsing of concrete surfaces shall be such that the waste water does not stain, discolor, or affect exposed surfaces of the structures, or damage the environment of the project area. The method of disposal shall be subject to approval.

3.1.2.5 Preparation of Previously Placed Concrete

Concrete surfaces to which other concrete is to be bonded shall be abraded in an approved manner that will expose sound aggregate uniformly without damaging the concrete. Laitance and loose particles shall be removed. Surfaces shall be thoroughly washed and shall be moist but without free water when concrete is placed.

3.1.3 Vapor Barrier

Vapor barrier shall be provided beneath the interior on-grade concrete floor slabs. The greatest widths and lengths practicable shall be used to eliminate joints wherever possible. Joints shall be lapped a minimum of 12 inches. Torn, punctured, or damaged vapor barrier material shall be removed and new vapor barrier shall be provided prior to placing concrete. For minor repairs, patches may be made using laps of at least 12 inches. Lapped joints shall be sealed and edges patched with pressure-sensitive adhesive or tape not less than 2 inches wide and compatible with the membrane. Vapor barrier shall be placed directly on underlying subgrade, base course, or capillary water barrier, unless it consists of crushed material or large granular material which could puncture the vapor barrier. In this case, the surface shall be choked with a light layer of sand, as

approved, before placing the vapor barrier. Compacted, clean concrete sand (fine aggregate) shall be placed on top of the vapor barrier before placing concrete, thickness as indicated on Drawings. Concrete placement shall be controlled so as to prevent damage to the vapor barrier, or any covering sand.

3.1.4 Perimeter Insulation

Perimeter insulation shall be installed at locations indicated. Adhesive shall be used where insulation is applied to the interior surface of foundation walls and may be used for exterior application.

3.1.5 Embedded Items

Before placement of concrete, care shall be taken to determine that all embedded items are firmly and securely fastened in place as indicated on the drawings, or required. Conduit and other embedded items shall be clean and free of oil and other foreign matter such as loose coatings or rust, paint, and scale. The embedding of wood in concrete will be permitted only when specifically authorized or directed. Voids in sleeves, inserts, and anchor slots shall be filled temporarily with readily removable materials to prevent the entry of concrete into voids. Welding shall not be performed on embedded metals within 2 feet of the surface of the concrete. Tack welding shall not be performed on or to embedded items.

3.2 CONCRETE PRODUCTION

3.2.1 Batching, Mixing, and Transporting Concrete

Concrete shall either be furnished from a ready-mixed concrete plant. Ready-mixed concrete shall be batched, mixed, and transported in accordance with ASTM C 94, except as otherwise specified. Truck mixers, agitators, and nonagitating transporting units shall comply with NRMCA-01. Ready-mix plant equipment and facilities shall be certified in accordance with NRMCA QC 3. Approved batch tickets shall be furnished for each load of ready-mixed concrete. Concrete shall be batched and mixed close to onsite, and shall conform to the following subparagraphs.

3.2.1.1 General

The batching plant shall be located off site close to the project. The batching plant shall conform to the requirements of NRMCA CPMB 100 and as specified; however, rating plates attached to batch plant equipment are not required.

3.2.1.2 Batching Equipment

The batching controls shall be semiautomatic or automatic, as defined in NRMCA CPMB 100. A semiautomatic batching system shall be provided with interlocks such that the discharge device cannot be actuated until the indicated material is within the applicable tolerance. The batching system shall be equipped with accurate recorder or recorders that meet the requirements of NRMCA CPMB 100. The weight of water and admixtures shall be recorded if batched by weight. Separate bins or compartments shall be provided for each size group of aggregate and type of cementitious material, to prevent intermingling at any time. Aggregates shall be weighed either in separate weigh batchers with individual scales or, provided the smallest size is batched first, cumulatively in one weigh batcher on one scale. Aggregate shall not be weighed in the same batcher

with cementitious material. If both portland cement and other cementitious material are used, they may be batched cumulatively, provided that the portland cement is batched first, except that silica fume shall always be batched separately. Water may be measured by weight or volume. Water shall not be weighed or measured cumulatively with another ingredient. Filling and discharging valves for the water metering or batching system shall be so interlocked that the discharge valve cannot be opened before the filling valve is fully closed. Piping for water and for admixtures shall be free from leaks and shall be properly valved to prevent backflow or siphoning. Admixtures shall be furnished as a liquid of suitable concentration for easy control of dispensing. An adjustable, accurate, mechanical device for measuring and dispensing each admixture shall be provided. Each admixture dispenser shall be interlocked with the batching and discharging operation of the water so that each admixture is separately batched and individually discharged automatically in a manner to obtain uniform distribution throughout the water as it is added to the batch in the specified mixing period. When use of truck mixers makes this requirement impractical, the admixture dispensers shall be interlocked with the sand batchers. Different admixtures shall not be combined prior to introduction in water and shall not be allowed to intermingle until in contact with the cement. Admixture dispensers shall have suitable devices to detect and indicate flow during dispensing or have a means for visual observation. The plant shall be arranged so as to facilitate the inspection of all operations at all times. Suitable facilities shall be provided for obtaining representative samples of aggregates from each bin or compartment, and for sampling and calibrating the dispensing of cementitious material, water, and admixtures. Filling ports for cementitious materials bins or silos shall be clearly marked with a permanent sign stating the contents.

3.2.1.3 Scales

The weighing equipment shall conform to the applicable requirements of CPMB Concrete Plant Standard, and of NIST HB 44, except that the accuracy shall be plus or minus 0.2 percent of scale capacity. The Contractor shall provide standard test weights and any other auxiliary equipment required for checking the operating performance of each scale or other measuring devices. The tests shall be made at the specified frequency in the presence of a Government inspector. The weighing equipment shall be arranged so that the plant operator can conveniently observe all dials or indicators.

3.2.1.4 Batching Tolerances

(A) Tolerances with Weighing Equipment

MATERIAL	PERCENT OF REQUIRED WEIGHT
Cementitious materials	0 to plus 2
Aggregate	plus or minus 2
Water	plus or minus 1
Chemical admixture	0 to plus 6

(B) Tolerances with Volumetric Equipment

For volumetric batching equipment used for water and admixtures, the following tolerances shall apply to the required volume of material being

batched:

MATERIAL	PERCENT OF REQUIRED MATERIAL
Water:	plus or minus 1 percent
Chemical admixtures:	0 to plus 6 percent

3.2.1.5 Moisture Control

The plant shall be capable of ready adjustment to compensate for the varying moisture content of the aggregates and to change the weights of the materials being batched.

3.2.1.6 Concrete Mixers

Mixers shall be stationary mixers or truck mixers. Mixers shall be capable of combining the materials into a uniform mixture and of discharging this mixture without segregation. The mixers shall not be charged in excess of the capacity recommended by the manufacturer. The mixers shall be operated at the drum or mixing blade speed designated by the manufacturer. The mixers shall be maintained in satisfactory operating condition, and the mixer drums shall be kept free of hardened concrete. Should any mixer at any time produce unsatisfactory results, its use shall be promptly discontinued until it is repaired.

3.2.1.7 Stationary Mixers

Concrete plant mixers shall be drum-type mixers of tilting, nontilting, horizontal-shaft, or vertical-shaft type, or shall be pug mill type and shall be provided with an acceptable device to lock the discharge mechanism until the required mixing time has elapsed. The mixing time and uniformity shall conform to all the requirements in ASTM C 94 applicable to central-mixed concrete.

3.2.1.8 Truck Mixers

Truck mixers, the mixing of concrete therein, and concrete uniformity shall conform to the requirements of ASTM C 94. A truck mixer may be used either for complete mixing (transit-mixed) or to finish the partial mixing done in a stationary mixer (shrink-mixed). Each truck shall be equipped with two counters from which it is possible to determine the number of revolutions at mixing speed and the number of revolutions at agitating speed. Or, if approved in lieu of this, the number of revolutions shall be marked on the batch tickets. Water shall not be added at the placing site unless specifically approved; and in no case shall it exceed the specified w/c. Any such water shall be injected at the base of the mixer, not at the discharge end.

3.3 TRANSPORTING CONCRETE TO PROJECT SITE

Concrete shall be transported to the placing site in truck mixers, agitators, nonagitating transporting equipment conforming to NRMCA-01,] or by approved pumping equipment or conveyors.

3.4 CONVEYING CONCRETE ON SITE

Concrete shall be conveyed from mixer or transporting unit to forms as

rapidly as possible and within the time interval specified by methods which will prevent segregation or loss of ingredients using following equipment. Conveying equipment shall be cleaned before each placement.

3.4.1 Buckets

The interior hopper slope shall be not less than 58 degrees from the horizontal, the minimum dimension of the clear gate opening shall be at least 5 times the nominal maximum-size aggregate, and the area of the gate opening shall not be less than 2 square feet. The maximum dimension of the gate opening shall not be greater than twice the minimum dimension. The bucket gates shall be essentially grout tight when closed and may be manually, pneumatically, or hydraulically operated except that buckets larger than 2 cubic yards shall not be manually operated. The design of the bucket shall provide means for positive regulation of the amount and rate of deposit of concrete in each dumping position.

3.4.2 Transfer Hoppers

Concrete may be charged into nonagitating hoppers for transfer to other conveying devices. Transfer hoppers shall be capable of receiving concrete directly from delivery vehicles and shall have conical-shaped discharge features. The transfer hopper shall be equipped with a hydraulically operated gate and with a means of external vibration to effect complete discharge. Concrete shall not be held in nonagitating transfer hoppers more than 30 minutes.

3.4.3 Trucks

Truck mixers operating at agitating speed or truck agitators used for transporting plant-mixed concrete shall conform to the requirements of ASTM C 94. Nonagitating equipment shall be used only for transporting plant-mixed concrete over a smooth road and when the hauling time is less than 15 minutes. Bodies of nonagitating equipment shall be smooth, watertight, metal containers specifically designed to transport concrete, shaped with rounded corners to minimize segregation, and equipped with gates that will permit positive control of the discharge of the concrete.

3.4.4 Chutes

When concrete can be placed directly from a truck mixer, agitator, or nonagitating equipment, the chutes normally attached to this equipment by the manufacturer may be used. A discharge deflector shall be used when required by the Contracting Officer. Separate chutes and other similar equipment will not be permitted for conveying concrete.

3.4.5 Belt Conveyors

Belt conveyors shall be designed and operated to assure a uniform flow of concrete from mixer to final place of deposit without segregation of ingredients or loss of mortar and shall be provided with positive means, such as discharge baffle or hopper , for preventing segregation of the concrete at the transfer points and the point of placing. Belt conveyors shall be constructed such that the idler spacing shall not exceed 36 inches. The belt speed shall be a minimum of 300 feet per minute and a maximum of 750 feet per minute. If concrete is to be placed through installed horizontal or sloping reinforcing bars, the conveyor shall discharge concrete into a pipe or elephant truck that is long enough to extend through the reinforcing bars.

3.4.6 Concrete Pumps

Concrete may be conveyed by positive displacement pump when approved. The pumping equipment shall be piston or squeeze pressure type; pneumatic placing equipment shall not be used. The pipeline shall be rigid steel pipe or heavy-duty flexible hose. The inside diameter of the pipe shall be at least 3 times the nominal maximum-size coarse aggregate in the concrete mixture to be pumped but not less than 4 inches. Aluminum pipe shall not be used.

3.5 PLACING CONCRETE

Mixed concrete shall be discharged within 1-1/2 hours or before the mixer drum has revolved 300 revolutions, whichever comes first after the introduction of the mixing water to the cement and aggregates. When the concrete temperature exceeds 85 degrees F, the time shall be reduced to 45 minutes. Concrete shall be placed within 15 minutes after it has been discharged from the transporting unit. Concrete shall be handled from mixer or transporting unit to forms in a continuous manner until the approved unit of operation is completed. Adequate scaffolding, ramps and walkways shall be provided so that personnel and equipment are not supported by in-place reinforcement. Placing will not be permitted when the sun, heat, wind, or limitations of facilities furnished by the Contractor prevent proper consolidation, finishing and curing. Sufficient placing capacity shall be provided so that concrete can be kept free of cold joints.

3.5.1 Depositing Concrete

Concrete shall be deposited as close as possible to its final position in the forms, and there shall be no vertical drop greater than 5 feet except where suitable equipment is provided to prevent segregation and where specifically authorized. Depositing of the concrete shall be so regulated that it will be effectively consolidated in horizontal layers not more than 12 inches thick, except that all slabs shall be placed in a single layer. Concrete to receive other construction shall be screeded to the proper level. Concrete shall be deposited continuously in one layer or in layers so that fresh concrete is deposited on in-place concrete that is still plastic. Fresh concrete shall not be deposited on concrete that has hardened sufficiently to cause formation of seams or planes of weakness within the section. Concrete that has surface dried, partially hardened, or contains foreign material shall not be used. When temporary spreaders are used in the forms, the spreaders shall be removed as their service becomes unnecessary. Concrete shall not be placed in slabs over columns and walls until concrete in columns and walls has been in-place at least two hours or until the concrete begins to lose its plasticity. Concrete for beams, girders, brackets, column capitals, haunches, and drop panels shall be placed at the same time as concrete for adjoining slabs.

3.5.2 Consolidation

Immediately after placing, each layer of concrete shall be consolidated by internal vibrators, except for slabs 4 inches thick or less. The vibrators shall at all times be adequate in effectiveness and number to properly consolidate the concrete; a spare vibrator shall be kept at the jobsite during all concrete placing operations. The vibrators shall have a frequency of not less than 10,000 vibrations per minute, an amplitude of at least 0.025 inch, and the head diameter shall be appropriate for the

structural member and the concrete mixture being placed. Vibrators shall be inserted vertically at uniform spacing over the area of placement. The distance between insertions shall be approximately 1-1/2 times the radius of action of the vibrator so that the area being vibrated will overlap the adjacent just-vibrated area by a reasonable amount. The vibrator shall penetrate rapidly to the bottom of the layer and at least 6 inches into the preceding layer if there is such. Vibrator shall be held stationary until the concrete is consolidated and then vertically withdrawn slowly while operating. Form vibrators shall not be used unless specifically approved and unless forms are constructed to withstand their use. Vibrators shall not be used to move concrete within the forms. Slabs 4 inches and less in thickness shall be consolidated by properly designed vibrating screeds or other approved technique. Excessive vibration of lightweight concrete resulting in segration or flotation of coarse aggregate shall be prevented. Frequency and amplitude of vibrators shall be determined in accordance with COE CRD-C 521. Grate tampers ("jitterbugs") shall not be used.

3.5.3 Cold Weather Requirements

Special protection measures, approved by the Contracting Officer, shall be used if freezing temperatures are anticipated before the expiration of the specified curing period. The ambient temperature of the air where concrete is to be placed and the temperature of surfaces to receive concrete shall be not less than 40 degrees F. The temperature of the concrete when placed shall be not less than 50 degrees F nor more than 75 degrees F. Heating of the mixing water or aggregates will be required to regulate the concrete placing temperature. Materials entering the mixer shall be free from ice, snow, or frozen lumps. Salt, chemicals or other materials shall not be incorporated in the concrete to prevent freezing. Upon written approval, an accelerating admixture conforming to ASTM C 494, Type C or E may be used, provided it contains no calcium chloride. Calcium chloride shall not be used.

3.5.4 Hot Weather Requirements

When the ambient temperature during concrete placing is expected to exceed 85 degrees F, the concrete shall be placed and finished with procedures previously submitted and as specified herein. The concrete temperature at time of delivery to the forms shall not exceed the temperature shown in the table below when measured in accordance with ASTM C 1064. Cooling of the mixing water or aggregates or placing concrete in the cooler part of the day may be required to obtain an adequate placing temperature. A retarder may be used, as approved, to facilitate placing and finishing. Steel forms and reinforcements shall be cooled as approved prior to concrete placement when steel temperatures are greater than 120 degrees F. Conveying and placing equipment shall be cooled if necessary to maintain proper concrete-placing temperature.

Maximum Allowable Concrete Placing Temperature

Relative Humidity, Percent, During Time of Concrete Placement	Maximum Allowable Concrete Temperature Degrees
Greater than 60	90 F

Maximum Allowable Concrete Placing Temperature

Relative Humidity, Percent, During Time of Concrete Placement	Maximum Allowable Concrete Temperature Degrees
40-60	85 F
Less than 40	80 F

3.5.5 Prevention of Plastic Shrinkage Cracking

During hot weather with low humidity, and particularly with appreciable wind, as well as interior placements when space heaters produce low humidity, the Contractor shall be alert to the tendency for plastic shrinkage cracks to develop and shall institute measures to prevent this. Particular care shall be taken if plastic shrinkage cracking is potentially imminent and especially if it has developed during a previous placement. Periods of high potential for plastic shrinkage cracking can be anticipated by use of Fig. 2.1.5 of ACI 305R. In addition the concrete placement shall be further protected by erecting shades and windbreaks and by applying fog sprays of water, sprinkling, ponding or wet covering. Plastic shrinkage cracks that occur shall be filled by injection of epoxy resin as directed, after the concrete hardens. Plastic shrinkage cracks shall never be troweled over or filled with slurry.

3.5.6 Placing Concrete in Congested Areas

Special care shall be used to ensure complete filling of the forms, elimination of all voids, and complete consolidation of the concrete when placing concrete in areas congested with reinforcing bars, embedded items, and other tight spacing. An appropriate concrete mixture shall be used, and the nominal maximum size of aggregate (NMSA) shall meet the specified criteria when evaluated for the congested area. Vibrators with heads of a size appropriate for the clearances available shall be used, and the consolidation operation shall be closely supervised to ensure complete and thorough consolidation at all points. Where necessary, splices of reinforcing bars shall be alternated to reduce congestion. Where two mats of closely spaced reinforcing are required, the bars in each mat shall be placed in matching alignment to reduce congestion. Reinforcing bars may be temporarily crowded to one side during concrete placement provided they are returned to exact required location before concrete placement and consolidation are completed.

3.5.7 Placing Flowable Concrete

If a plasticizing admixture conforming to ASTM C 1017 is used or if a Type F or G high range water reducing admixture is permitted to increase the slump, the concrete shall meet all requirements of paragraph GENERAL REQUIREMENTS in PART 1. Extreme care shall be used in conveying and placing the concrete to avoid segregation. Consolidation and finishing shall meet all requirements of paragraphs Placing Concrete, Finishing Formed Surfaces, and Finishing Unformed Surfaces. No relaxation of requirements to accommodate flowable concrete will be permitted.

3.6 JOINTS

Joints shall be located and constructed as indicated or approved. Joints

not indicated on the drawings shall be located and constructed to minimize the impact on the strength of the structure. In general, such joints shall be located near the middle of the spans of supported slabs, beams, and girders unless a beam intersects a girder at this point, in which case the joint in the girder shall be offset a distance equal to twice the width of the beam. Joints in walls and columns shall be at the underside of floors, slabs, beams, or girders and at the tops of footings or floor slabs, unless otherwise approved. Joints shall be perpendicular to the main reinforcement. All reinforcement shall be continued across joints; except that reinforcement or other fixed metal items shall not be continuous through expansion joints, or through construction or contraction joints in slabs on grade. Reinforcement shall be 2 inches clear from each joint. Except where otherwise indicated, construction joints between interior slabs on grade and vertical surfaces shall consist of 30 pound asphalt-saturated felt, extending for the full depth of the slab. The perimeters of the slabs shall be free of fins, rough edges, spalling, or other unsightly appearance. Reservoir for sealant for construction and contraction joints in slabs shall be formed to the dimensions shown on the drawings by removing snap-out joint-forming inserts, by sawing sawable inserts, or by sawing to widen the top portion of sawed joints. Joints to be sealed shall be cleaned and sealed as indicated and in accordance with Section 07920 JOINT SEALING.

3.6.1 Construction Joints

Concrete shall be placed continuously so that each unit is monolithic in construction. Fresh concrete shall not be placed against adjacent hardened concrete until it is at least 24 hours old. Construction joints shall be located as indicated or approved. Where concrete work is interrupted by weather, end of work shift or other similar type of delay, location and type of construction joint shall be subject to approval of the Contracting Officer. Unless otherwise indicated and except for slabs on grade, reinforcing steel shall extend through construction joints. Construction joints in slabs on grade shall be keyed or doweled as shown. Concrete columns, walls, or piers shall be in place at least 2 hours, or until the concrete begins to lose its plasticity, before placing concrete for beams, girders, or slabs thereon. In walls having door or window openings, lifts shall terminate at the top and bottom of the opening. Other lifts shall terminate at such levels as to conform to structural requirements or architectural details. Where horizontal construction joints in walls or columns are required, a strip of 1 inch square-edge lumber, bevelled and oiled to facilitate removal, shall be tacked to the inside of the forms at the construction joint. Concrete shall be placed to a point 1 inch above the underside of the strip. The strip shall be removed 1 hour after the concrete has been placed, and any irregularities in the joint line shall be leveled off with a wood float, and all laitance shall be removed. Prior to placing additional concrete, horizontal construction joints shall be prepared as specified in paragraph Previously Placed Concrete.

3.6.2 Contraction Joints in Slabs on Grade

Contraction joints shall be located and detailed as shown on the drawings. Contraction Joints shall be produced by forming a weakened plane in the concrete slab by use of rigid inserts impressed in the concrete during placing operations, use of snap-out plastic joint forming inserts or sawing a continuous slot with a concrete saw. Regardless of method used to produce the weakened plane, it shall be 1/4 the depth of the slab thickness and between 1/8 and 3/16 inch wide. For saw-cut joints, cutting shall be timed properly with the set of the concrete. Cutting shall be started as

soon as the concrete has hardened sufficiently to prevent ravelling of the edges of the saw cut. Cutting shall be completed before shrinkage stresses become sufficient to produce cracking. Reservoir for joint sealant shall be formed as previously specified.

3.6.3 Expansion Joints

Installation of expansion joints and sealing of these joints shall conform to the requirements of Section 03250 EXPANSION JOINTS, CONSTRUCTION JOINTS, AND WATERSTOPS and Section 07920 JOINT SEALING.

3.6.4 Dowels and Tie Bars

Dowels and tie bars shall be installed at the locations shown on the drawings and to the details shown, using materials and procedures specified in Section 03200 CONCRETE REINFORCEMENT and herein. Conventional smooth "paving" dowels shall be installed in slabs using approved methods to hold the dowel in place during concreting within a maximum alignment tolerance of 1/8 inch in 12 inches. "Structural" type deformed bar dowels, or tie bars, shall be installed to meet the specified tolerances. Care shall be taken during placing adjacent to and around dowels and tie bars to ensure there is no displacement of the dowel or tie bar and that the concrete completely embeds the dowel or tie bar and is thoroughly consolidated.

3.7 FINISHING FORMED SURFACES

Forms, form materials, and form construction are specified in Section 03100 STRUCTURAL CONCRETE FORMWORK. Finishing of formed surfaces shall be as specified herein. Unless another type of architectural or special finish is specified, surfaces shall be left with the texture imparted by the forms except that defective surfaces shall be repaired. Unless painting of surfaces is required, uniform color of the concrete shall be maintained by use of only one mixture without changes in materials or proportions for any structure or portion of structure that requires a Class A or B finish. Except for major defects, as defined hereinafter, surface defects shall be repaired as specified herein within 24 hours after forms are removed. Repairs of the so-called "plaster-type" will not be permitted in any location. Tolerances of formed surfaces shall conform to the requirements of ACI 117/A117R. These tolerances apply to the finished concrete surface, not to the forms themselves; forms shall be set true to line and grade. Form tie holes requiring repair and other defects whose depth is at least as great as their surface diameter shall be repaired as specified in paragraph Damp-Pack Mortar Repair. Defects whose surface diameter is greater than their depth shall be repaired as specified in paragraph Repair of Major Defects. Repairs shall be finished flush with adjacent surfaces and with the same surface texture. The cement used for all repairs shall be a blend of job cement with white cement proportioned so that the final color after curing and aging will be the same as the adjacent concrete. Concrete with excessive honeycomb, or other defects which affect the strength of the member, will be rejected. Repairs shall be demonstrated to be acceptable and free from cracks or loose or drummy areas at the completion of the contract and, for Class A and B Finishes, shall be inconspicuous. Repairs not meeting these requirements will be rejected and shall be replaced.

3.7.1 Class B Finish

Class B finish is required where indicated on the drawings to be visuable. Fins, ravelings, and loose material shall be removed, all surface defects

over 1/2 inch in diameter or more than 1/2 inch deep, shall be repaired and, except as otherwise indicated or as specified in Section 03100 STRUCTURAL CONCRETE FORMWORK, holes left by removal of form ties shall be reamed and filled. Defects more than 1/2 inch in diameter shall be cut back to sound concrete, but in all cases at least 1 inch deep. The Contractor shall prepare a sample panel for approval (as specified in PART 1) before commencing repair, showing that the surface texture and color match will be attained. Metal tools shall not be used to finish repairs in Class A surfaces.

3.7.2 Class D Finish

Class D finish is required where indicated on the drawings as all areas noted exposed to view. Fins, ravelings, and loose material shall be removed, and, except as otherwise indicated or as specified in Section 03100 STRUCTURAL CONCRETE FORMWORK, holes left by removal of form ties shall be reamed and filled. Honeycomb and other defects more than 1/2 inch deep or more than 2 inches in diameter shall be repaired. Defects more than 2 inches in diameter shall be cut back to sound concrete, but in all cases at least 1 inch deep.

3.8 REPAIRS

3.8.1 Damp-Pack Mortar Repair

Form tie holes requiring repair and other defects whose depth is at least as great as their surface diameter but not over 4 inches shall be repaired by the damp-pack mortar method. Form tie holes shall be reamed and other similar defects shall be cut out to sound concrete. The void shall then be thoroughly cleaned, thoroughly wetted, brush-coated with a thin coat of neat cement grout and filled with mortar. Mortar shall be a stiff mix of 1 part portland cement to 2 parts fine aggregate passing the No. 16 mesh sieve, and minimum amount of water. Only sufficient water shall be used to produce a mortar which, when used, will stick together on being molded into a ball by a slight pressure of the hands and will not exude water but will leave the hands damp. Mortar shall be mixed and allowed to stand for 30 to 45 minutes before use with remixing performed immediately prior to use. Mortar shall be thoroughly tamped in place in thin layers using a hammer and hardwood block. Holes passing entirely through walls shall be completely filled from the inside face by forcing mortar through to the outside face. All holes shall be packed full. Damp-pack repairs shall be moist cured for at least 48 hours.

3.8.2 Repair of Major Defects

Major defects will be considered to be those more than 1/2 inch deep or, for Class B finishes, more than 1/2 inch in diameter and, for Class D finishes, more than 2 inches in diameter. Also included are any defects of any kind whose depth is over 4 inches or whose surface diameter is greater than their depth. Major defects shall be repaired as specified below.

3.8.2.1 Surface Application of Mortar Repair

Defective concrete shall be removed, and removal shall extend into completely sound concrete. Approved equipment and procedures which will not cause cracking or microcracking of the sound concrete shall be used. If reinforcement is encountered, concrete shall be removed so as to expose the reinforcement for at least 2 inches on all sides. All such defective

areas greater than 12 square inches shall be outlined by saw cuts at least 1 inch deep. Defective areas less than 12 square inches shall be outlined by a 1 inch deep cut with a core drill in lieu of sawing. All saw cuts shall be straight lines in a rectangular pattern in line with the formwork panels. After concrete removal, the surface shall be thoroughly cleaned by high pressure washing to remove all loose material. Surfaces shall be kept continually saturated for the first 12 of the 24 hours immediately before placing mortar and shall be damp but not wet at the time of commencing mortar placement. The Contractor, at his option, may use either hand-placed mortar or mortar placed with a mortar gun. If hand-placed mortar is used, the edges of the cut shall be perpendicular to the surface of the concrete. The prepared area shall be brush-coated with a thin coat of neat cement grout. The repair shall then be made using a stiff mortar, preshrunk by allowing the mixed mortar to stand for 30 to 45 minutes and then remixed, thoroughly tamped into place in thin layers. If hand-placed mortar is used, the Contractor shall test each repair area for drumminess by firm tapping with a hammer and shall inspect for cracks, both in the presence of the Contracting Officer's representative, immediately before completion of the contract, and shall replace any showing drumminess or cracking. If mortar placed with a mortar gun is used, the gun shall be a small compressed air-operated gun to which the mortar is slowly hand fed and which applies the mortar to the surface as a high-pressure stream, as approved. Repairs made using shotcrete equipment will not be accepted. The mortar used shall be the same mortar as specified for damp-pack mortar repair. If gun-placed mortar is used, the edges of the cut shall be beveled toward the center at a slope of 1:1. All surface applied mortar repairs shall be continuously moist cured for at least 7 days. Moist curing shall consist of several layers of saturated burlap applied to the surface immediately after placement is complete and covered with polyethylene sheeting, all held closely in place by a sheet of plywood or similar material rigidly braced against it. Burlap shall be kept continually wet.

3.8.2.2 Repair of Deep and Large Defects

Deep and large defects will be those that are more than 6 inches deep and also have an average diameter at the surface more than 18 inches or that are otherwise so identified by the Project Office. Such defects shall be repaired as specified herein or directed, except that defects which affect the strength of the structure shall not be repaired and that portion of the structure shall be completely removed and replaced. Deep and large defects shall be repaired by procedures approved in advance including forming and placing special concrete using applied pressure during hardening. Preparation of the repair area shall be as specified for surface application of mortar. In addition, the top edge (surface) of the repair area shall be sloped at approximately 20 degrees from the horizontal, upward toward the side from which concrete will be placed. The special concrete shall be a concrete mixture with low water content and low slump, and shall be allowed to age 30 to 60 minutes before use. Concrete containing a specified expanding admixture may be used in lieu of the above mixture; the paste portion of such concrete mixture shall be designed to have an expansion between 2.0 and 4.0 percent when tested in accordance with ASTM C 940. A full width "chimney" shall be provided at the top of the form on the placing side to ensure filling to the top of the opening. A pressure cap shall be used on the concrete in the chimney with simultaneous tightening and revibrating the form during hardening to ensure a tight fit for the repair. The form shall be removed after 24 hours and immediately the chimney shall be carefully chipped away to avoid breaking concrete out of the repair; the surface of the repair concrete shall be

dressed as required.

3.8.3 Resinous and Latex Material Repair

In lieu of the portland cement bonding coats specified above, an epoxy resin or a latex bonding agent may be used.

3.9 FINISHING UNFORMED SURFACES

The finish of all unformed surfaces shall meet the requirements of paragraph Tolerances in PART 1, when tested as specified herein.

3.9.1 General

The ambient temperature of spaces adjacent to unformed surfaces being finished and of the base on which concrete will be placed shall be not less than 50 degrees F. In hot weather all requirements of paragraphs Hot Weather Requirements and Prevention of Plastic Shrinkage Cracking shall be met. Unformed surfaces that are not to be covered by additional concrete or backfill shall have a float finish, with additional finishing as specified below, and shall be true to the elevation shown on the drawings. Surfaces to receive additional concrete or backfill shall be brought to the elevation shown on the drawings, properly consolidated, and left true and regular. Unless otherwise shown on the drawings, exterior surfaces shall be sloped for drainage, as directed. Where drains are provided, interior floors shall be evenly sloped to the drains. Joints shall be carefully made with a jointing or edging tool. The finished surfaces shall be protected from stains or abrasions. Grate tampers or "jitterbugs" shall not be used for any surfaces. The dusting of surfaces with dry cement or other materials or the addition of any water during finishing shall not be permitted. If bleedwater is present prior to finishing, the excess water shall be carefully dragged off or removed by absorption with porous materials such as burlap. During finishing operations, extreme care shall be taken to prevent over finishing or working water into the surface; this can cause "crazing" (surface shrinkage cracks which appear after hardening) of the surface. Any slabs with surfaces which exhibit significant crazing shall be removed and replaced. During finishing operations, surfaces shall be checked with a 10 foot straightedge, applied in both directions at regular intervals while the concrete is still plastic, to detect high or low areas.

3.9.2 Floated Finish

Slabs to receive more than a rough slab finish shall next be given a wood float finish. The following areas depressed slab areas shall be given only a float finish. The screeding shall be followed immediately by darbying or bull floating before bleeding water is present, to bring the surface to a true, even plane. Then, after the concrete has stiffened so that it will withstand a man's weight without imprint of more than 1/4 inch and the water sheen has disappeared, it shall be floated to a true and even plane free of ridges. Floating shall be performed by use of suitable hand floats or power driven equipment. Sufficient pressure shall be used on the floats to bring a film of moisture to the surface. Hand floats shall be made of wood, magnesium, or aluminum. Lightweight concrete or concrete that exhibits stickiness shall be floated with a magnesium float. Care shall be taken to prevent over-finishing or incorporating water into the surface.

3.9.3 Troweled Finish

All areas not indicated to be depressed shall be given a trowel finish. After floating is complete and after the surface moisture has disappeared, unformed surfaces shall be steel-troweled to a smooth, even, dense finish, free from blemishes including trowel marks. In lieu of hand finishing, an approved power finishing machine may be used in accordance with the directions of the machine manufacturer. Additional trowelings shall be performed, either by hand or machine until the surface has been troweled 3 times, with waiting period between each. Care shall be taken to prevent blistering and if such occurs, troweling shall immediately be stopped and operations and surfaces corrected. A final hard steel troweling shall be done by hand, with the trowel tipped, and using hard pressure, when the surface is at a point that the trowel will produce a ringing sound. The finished surface shall be thoroughly consolidated and shall be essentially free of trowel marks and be uniform in texture and appearance. The concrete mixture used for troweled finished areas shall be adjusted, if necessary, in order to provide sufficient fines (cementitious material and fine sand) to finish properly.

3.10 EXTERIOR SLAB AND RELATED ITEMS

3.10.1 Pavements

Pavements shall be constructed where shown on the drawings. After forms are set and underlying material prepared as specified, the concrete shall be placed uniformly throughout the area and thoroughly vibrated. As soon as placed and vibrated, the concrete shall be struck off and screeded to the crown and cross section and to such elevation above grade that when consolidated and finished, the surface of the pavement will be at the required elevation. The entire surface shall be tamped with the strike off, or consolidated with a vibrating screed, and this operation continued until the required compaction and reduction of internal and surface voids are accomplished. Care shall be taken to prevent bringing excess paste to the surface. Immediately following the final consolidation of the surface, the pavement shall be floated longitudinally from bridges resting on the side forms and spanning but not touching the concrete. If necessary, additional concrete shall be placed and screeded, and the float operated until a satisfactory surface has been produced. The floating operation shall be advanced not more than half the length of the float and then continued over the new and previously floated surfaces. After finishing is completed but while the concrete is still plastic, minor irregularities and score marks in the pavement surface shall be eliminated by means of long-handled cutting straightedges. Straightedges shall be 12 feet in length and shall be operated from the sides of the pavement and from bridges. A straightedge operated from the side of the pavement shall be equipped with a handle 3 feet longer than one-half the width of the pavement. The surface shall then be tested for trueness with a 12 foot straightedge held in successive positions parallel and at right angles to the center line of the pavement, and the whole area covered as necessary to detect variations. The straightedge shall be advanced along the pavement in successive stages of not more than one-half the length of the straightedge. Depressions shall be immediately filled with freshly mixed concrete, struck off, consolidated, and refinished. Projections above the required elevation shall also be struck off and refinished. The straightedge testing and finishing shall continue until the entire surface of the concrete is true. Before the surface sheen has disappeared and well before the concrete becomes nonplastic, the surface of the pavement shall be given a nonslip sandy surface texture by use of a burlap drag. A strip of clean, wet burlap from 3 to 5 feet wide and 2 feet longer than the pavement width shall be carefully pulled across the surface. Edges and

joints shall be rounded with an edger having a radius of 1/8 inch. Curing shall be as specified.

3.10.2 Pits and Trenches

Pits and trenches shall be constructed as indicated on the drawings. Bottoms and walls shall be placed monolithically or waterstops and keys, shall be provided as approved.

3.10.3 Non-Slip Finish

Non-slip surfaces shall be constructed in accordance with the following subparagraph.

3.10.3.1 Broomed

Areas as indicated on the drawings shall be given a broomed finish. After floating, the surface shall be lightly steel troweled, and then carefully scored by pulling a coarse fiber push-type broom across the surface. Brooming shall be transverse to traffic or at right angles to the slope of the slab. After the end of the curing period, the surface shall be vigorously broomed with a coarse fiber broom to remove all loose or semi-detached particles.

3.11 CURING AND PROTECTION

3.11.1 General

Concrete shall be cured by an approved method for the period of time given below:

All other concrete	7 days

Immediately after placement, concrete shall be protected from premature drying, extremes in temperatures, rapid temperature change, mechanical injury and damage from rain and flowing water for the duration of the curing period. Air and forms in contact with concrete shall be maintained at a temperature above 50 degrees F for the first 3 days and at a temperature above 32 degrees F for the remainder of the specified curing period. Exhaust fumes from combustion heating units shall be vented to the outside of the enclosure, and heaters and ducts shall be placed and directed so as not to cause areas of overheating and drying of concrete surfaces or to create fire hazards. Materials and equipment needed for adequate curing and protection shall be available and at the site prior to placing concrete. No fire or excessive heat, including welding, shall be permitted near or in direct contact with the concrete at any time. Except as otherwise permitted by paragraph Membrane Forming Curing Compounds, moist curing shall be provided for any areas to receive floor hardener, any paint or other applied coating, or to which other concrete is to be bonded. Concrete containing silica fume shall be initially cured by fog misting during finishing, followed immediately by continuous moist curing. Except for plastic coated burlap, impervious sheeting alone shall not be used for curing.

3.11.2 Moist Curing

Concrete to be moist-cured shall be maintained continuously wet for the entire curing period, commencing immediately after finishing. If water or curing materials used stain or discolor concrete surfaces which are to be

permanently exposed, the concrete surfaces shall be cleaned as approved. When wooden forms are left in place during curing, they shall be kept wet at all times. If steel forms are used in hot weather, nonsupporting vertical forms shall be broken loose from the concrete soon after the concrete hardens and curing water continually applied in this void. If the forms are removed before the end of the curing period, curing shall be carried out as on unformed surfaces, using suitable materials. Surfaces shall be cured by ponding, by continuous sprinkling, by continuously saturated burlap or cotton mats, or by continuously saturated plastic coated burlap. Burlap and mats shall be clean and free from any contamination and shall be completely saturated before being placed on the concrete. The Contractor shall have an approved work system to ensure that moist curing is continuous 24 hours per day.

3.11.3 Membrane Forming Curing Compounds

Membrane forming curing compounds may be used at Contractors option, inlieu of other curing methods as specified herein. Concrete in the following areas may be cured with a nonpigmented curing compound containing a fugitive dye in lieu of moist curing. Membrane curing shall not be used on surfaces that are to receive any subsequent treatment depending on adhesion or bonding to the concrete, including surfaces to which a smooth finish is to be applied or other concrete to be bonded. However, a styrene acrylate or chlorinated rubber compound meeting ASTM C 309, Class B requirements, may be used for surfaces which are to be painted or are to receive bituminous roofing or waterproofing, or floors that are to receive adhesive applications of resilient flooring. The curing compound selected shall be compatible with any subsequent paint, roofing, waterproofing or flooring specified. Membrane curing compound shall not be used on surfaces that are maintained at curing temperatures with free steam. Curing compound shall be applied to formed surfaces immediately after the forms are removed and prior to any patching or other surface treatment except the cleaning of loose sand, mortar, and debris from the surface. All surfaces shall be thoroughly moistened with water. Curing compound shall be applied to slab surfaces as soon as the bleeding water has disappeared, with the tops of joints being temporarily sealed to prevent entry of the compound and to prevent moisture loss during the curing period. The curing compound shall be applied in a two-coat continuous operation by approved motorized power-spraying equipment operating at a minimum pressure of 75 psi, at a uniform coverage of not more than 400 square feet per gallon for each coat, and the second coat shall be applied perpendicular to the first coat. Concrete surfaces which have been subjected to rainfall within 3 hours after curing compound has been applied shall be resprayed by the method and at the coverage specified. Surfaces on which clear compound is used shall be shaded from direct rays of the sun for the first 3 days. Surfaces coated with curing compound shall be kept free of foot and vehicular traffic, and from other sources of abrasion and contamination during the curing period.

3.11.4 Impervious Sheeting

Concrete surfaces may be cured using Contractors option of any product specified herein. However, except for plastic coated burlap, impervious sheeting alone shall not be used for curing. Impervious-sheet curing shall only be used on horizontal or nearly horizontal surfaces. Surfaces shall be thoroughly wetted and be completely covered with the sheeting. Sheeting shall be at least 18 inches wider than the concrete surface to be covered. Covering shall be laid with light-colored side up. Covering shall be

lapped not less than 12 inches and securely weighted down or shall be lapped not less than 4 inches and taped to form a continuous cover with completely closed joints. The sheet shall be weighted to prevent displacement so that it remains in contact with the concrete during the specified length of curing. Coverings shall be folded down over exposed edges of slabs and secured by approved means. Sheets shall be immediately repaired or replaced if tears or holes appear during the curing period.

3.11.5 Ponding or Immersion

Concrete surfaces may be cured using Contractors option for any method as listed herein. Concrete shall be continually immersed throughout the curing period. Water shall not be more than 20 degrees F less than the temperature of the concrete.

3.11.6 Cold Weather Curing and Protection

When the daily ambient low temperature is less than 32 degrees F the temperature of the concrete shall be maintained above 40 degrees F for the first seven days after placing. During the period of protection removal, the air temperature adjacent to the concrete surfaces shall be controlled so that concrete near the surface will not be subjected to a temperature differential of more than 25 degrees F as determined by suitable temperature measuring devices furnished by the Government, as required, and installed adjacent to the concrete surface and 2 inches inside the surface of the concrete. The installation of the thermometers shall be made by the Contractor as directed.

3.12 SETTING BASE PLATES AND BEARING PLATES

After being properly positioned, column base plates, bearing plates for beams and similar structural members, and machinery and equipment base plates shall be set to the proper line and elevation with damp-pack bedding mortar, except where nonshrink grout is indicated. The thickness of the mortar or grout shall be approximately 1/24 the width of the plate, but not less than 3/4 inch. Concrete and metal surfaces in contact with grout shall be clean and free of oil and grease, and concrete surfaces in contact with grout shall be damp and free of laitance when grout is placed. Nonshrink grout shall be used for at all baseplates.

3.12.1 Damp-Pack Bedding Mortar

Damp-pack bedding mortar shall consist of 1 part cement and 2-1/2 parts fine aggregate having water content such that a mass of mortar tightly squeezed in the hand will retain its shape but will crumble when disturbed. The space between the top of the concrete and bottom of the bearing plate or base shall be packed with the bedding mortar by tamping or ramming with a bar or rod until it is completely filled.

3.12.2 Nonshrink Grout

Nonshrink grout shall be a ready-mixed material requiring only the addition of water. Water content shall be the minimum that will provide a flowable mixture and completely fill the space to be grouted without segregation, bleeding, or reduction of strength.

3.12.2.1 Mixing and Placing of Nonshrink Grout

Mixing and placing shall be in conformance with the material manufacturer's

instructions and as specified therein. Ingredients shall be thoroughly dry-mixed before adding water. After adding water, the batch shall be mixed for 3 minutes. Batches shall be of size to allow continuous placement of freshly mixed grout. Grout not used within 30 minutes after mixing shall be discarded. The space between the top of the concrete or machinery-bearing surface and the plate shall be filled solid with the grout. Forms shall be of wood or other equally suitable material for completely retaining the grout on all sides and on top and shall be removed after the grout has set. The placed grout shall be carefully worked by rodding or other means to eliminate voids; however, overworking and breakdown of the initial set shall be avoided. Grout shall not be retempered or subjected to vibration from any source. Where clearances are unusually small, placement shall be under pressure with a grout pump. Temperature of the grout, and of surfaces receiving the grout, shall be maintained at 65 to 85 degrees F until after setting.

3.12.2.2 Treatment of Exposed Surfaces

For metal-oxidizing nonshrink grout, exposed surfaces shall be cut back 1 inch and immediately covered with a parge coat of mortar consisting of 1 part portland cement and 2-1/2 parts fine aggregate by weight, with sufficient water to make a plastic mixture. The parge coat shall have a smooth finish. For other mortars or grouts, exposed surfaces shall have a smooth-dense finish and be left untreated. Curing shall comply with paragraph CURING AND PROTECTION.

3.13 TESTING AND INSPECTION FOR CONTRACTOR QUALITY CONTROL

The Contractor shall perform the inspection and tests described below and, based upon the results of these inspections and tests, shall take the action required and shall submit specified reports. When, in the opinion of the Contracting Officer, the concreting operation is out of control, concrete placement shall cease and the operation shall be corrected. The laboratory performing the tests shall be onsite and shall conform with ASTM C 1077. Materials may be subjected to check testing by the Government from samples obtained at the manufacturer, at transfer points, or at the project site. The Government will inspect the laboratory, equipment, and test procedures prior to start of concreting operations and at least once per month thereafter for conformance with ASTM C 1077.

3.13.1 Grading and Corrective Action

3.13.1.1 Fine Aggregate

At least once during each shift when the concrete plant is operating, there shall be one sieve analysis and fineness modulus determination in accordance with ASTM C 136 and COE CRD-C 104 for the fine aggregate or for each fine aggregate if it is batched in more than one size or classification. The location at which samples are taken may be selected by the Contractor as the most advantageous for control. However, the Contractor is responsible for delivering fine aggregate to the mixer within specification limits. When the amount passing on any sieve is outside the specification limits, the fine aggregate shall be immediately resampled and retested. If there is another failure on any sieve, the fact shall immediately reported to the Contracting Officer, concreting shall be stopped, and immediate steps taken to correct the grading.

3.13.1.2 Coarse Aggregate

At least once during each shift in which the concrete plant is operating, there shall be a sieve analysis in accordance with ASTM C 136 for each size of coarse aggregate. The location at which samples are taken may be selected by the Contractor as the most advantageous for production control. However, the Contractor shall be responsible for delivering the aggregate to the mixer within specification limits. A test record of samples of aggregate taken at the same locations shall show the results of the current test as well as the average results of the five most recent tests including the current test. The Contractor may adopt limits for control coarser than the specification limits for samples taken other than as delivered to the mixer to allow for degradation during handling. When the amount passing any sieve is outside the specification limits, the coarse aggregate shall be immediately resampled and retested. If the second sample fails on any sieve, that fact shall be reported to the Contracting Officer. Where two consecutive averages of 5 tests are outside specification limits, the operation shall be considered out of control and shall be reported to the Contracting Officer. Concreting shall be stopped and immediate steps shall be taken to correct the grading.

3.13.2 Quality of Aggregates

Thirty days prior to the start of concrete placement, the Contractor shall perform all tests for aggregate quality required by ASTM C 33. In addition, after the start of concrete placement, the Contractor shall perform tests for aggregate quality at least every three months, and when the source of aggregate or aggregate quality changes. Samples tested after the start of concrete placement shall be taken immediately prior to entering the concrete mixer.

3.13.3 Scales, Batching and Recording

The accuracy of the scales shall be checked by test weights prior to start of concrete operations and at least once every three months. Such tests shall also be made as directed whenever there are variations in properties of the fresh concrete that could result from batching errors. Once a week the accuracy of each batching and recording device shall be checked during a weighing operation by noting and recording the required weight, recorded weight, and the actual weight batched. At the same time, the Contractor shall test and ensure that the devices for dispensing admixtures are operating properly and accurately. When either the weighing accuracy or batching accuracy does not comply with specification requirements, the plant shall not be operated until necessary adjustments or repairs have been made. Discrepancies in recording accuracies shall be corrected immediately.

3.13.4 Batch-Plant Control

The measurement of concrete materials including cementitious materials, each size of aggregate, water, and admixtures shall be continuously controlled. The aggregate weights and amount of added water shall be adjusted as necessary to compensate for free moisture in the aggregates. The amount of air-entraining agent shall be adjusted to control air content within specified limits. A report shall be prepared indicating type and source of cement used, type and source of pozzolan or slag used, amount and source of admixtures used, aggregate source, the required aggregate and water weights per cubic yard, amount of water as free moisture in each size of aggregate, and the batch aggregate and water weights per cubic yard for each class of concrete batched during each day's plant operation.

3.13.5 Concrete Mixture

a. Air Content Testing. Air content tests shall be made when test specimens are fabricated. In addition, at least two tests for air content shall be made on randomly selected batches of each separate concrete mixture produced during each 8-hour period of concrete production. Additional tests shall be made when excessive variation in workability is reported by the placing foreman or Government inspector. Tests shall be made in accordance with ASTM C 231 for normal weight concrete and ASTM C 173 for lightweight concrete. Test results shall be plotted on control charts which shall at all times be readily available to the Government and shall be submitted weekly. Copies of the current control charts shall be kept in the field by testing crews and results plotted as tests are made. When a single test result reaches either the upper or lower action limit, a second test shall immediately be made. The results of the two tests shall be averaged and this average used as the air content of the batch to plot on both the air content and the control chart for range, and for determining need for any remedial action. The result of each test, or average as noted in the previous sentence, shall be plotted on a separate control chart for each mixture on which an "average line" is set at the midpoint of the specified air content range from paragraph Air Entrainment. An upper warning limit and a lower warning limit line shall be set 1.0 percentage point above and below the average line, respectively. An upper action limit and a lower action limit line shall be set 1.5 percentage points above and below the average line, respectively. The range between each two consecutive tests shall be plotted on a secondary control chart for range where an upper warning limit is set at 2.0 percentage points and an upper action limit is set at 3.0 percentage points. Samples for air content may be taken at the mixer, however, the Contractor is responsible for delivering the concrete to the placement site at the stipulated air content. If the Contractor's materials or transportation methods cause air content loss between the mixer and the placement, correlation samples shall be taken at the placement site as required by the Contracting Officer, and the air content at the mixer controlled as directed.

b. Air Content Corrective Action. Whenever points on the control chart for percent air reach either warning limit, an adjustment shall immediately be made in the amount of air-entraining admixture batched. As soon as practical after each adjustment, another test shall be made to verify the result of the adjustment. Whenever a point on the secondary control chart for range reaches the warning limit, the admixture dispenser shall be recalibrated to ensure that it is operating accurately and with good reproducibility. Whenever a point on either control chart reaches an action limit line, the air content shall be considered out of control and the concreting operation shall immediately be halted until the air content is under control. Additional air content tests shall be made when concreting is restarted.

c. Slump Testing. In addition to slump tests which shall be made when test specimens are fabricated, at least four slump tests shall be made on randomly selected batches in accordance with ASTM C 143 for each separate concrete mixture produced during each 8-hour or less period of concrete production each day. Also,

additional tests shall be made when excessive variation in workability is reported by the placing foreman or Government inspector. Test results shall be plotted on control charts which shall at all times be readily available to the Government and shall be submitted weekly. Copies of the current control charts shall be kept in the field by testing crews and results plotted as tests are made. When a single slump test reaches or goes beyond either the upper or lower action limit, a second test shall immediately be made. The results of the two tests shall be averaged and this average used as the slump of the batch to plot on both the control charts for slump and the chart for range, and for determining need for any remedial action. Limits shall be set on separate control charts for slump for each type of mixture. The upper warning limit shall be set at 1/2 inch below the maximum allowable slump specified in paragraph Slump in PART 1 for each type of concrete and an upper action limit line and lower action limit line shall be set at the maximum and minimum allowable slumps, respectively, as specified in the same paragraph. The range between each consecutive slump test for each type of mixture shall be plotted on a single control chart for range on which an upper action limit is set at 2 inches. Samples for slump shall be taken at the mixer. However, the Contractor is responsible for delivering the concrete to the placement site at the stipulated slump. If the Contractor's materials or transportation methods cause slump loss between the mixer and the placement, correlation samples shall be taken at the placement site as required by the Contracting Officer, and the slump at the mixer controlled as directed.

d. Slump Corrective Action. Whenever points on the control charts for slump reach the upper warning limit, an adjustment shall immediately be made in the batch weights of water and fine aggregate. The adjustments are to be made so that the total water content does not exceed that amount allowed by the maximum w/c ratio specified, based on aggregates which are in a saturated surface dry condition. When a single slump reaches the upper or lower action limit, no further concrete shall be delivered to the placing site until proper adjustments have been made. Immediately after each adjustment, another test shall be made to verify the correctness of the adjustment. Whenever two consecutive individual slump tests, made during a period when there was no adjustment of batch weights, produce a point on the control chart for range at or above the upper action limit, the concreting operation shall immediately be halted, and the Contractor shall take appropriate steps to bring the slump under control. Additional slump tests shall be made as directed.

e. Temperature. The temperature of the concrete shall be measured when compressive strength specimens are fabricated. Measurement shall be in accordance with ASTM C 1064. The temperature shall be reported along with the compressive strength data.

f. Strength Specimens. At least one set of test specimens shall be made, for compressive strength as appropriate, on each different concrete mixture placed during the day for each 500 cubic yards or portion thereof of that concrete mixture placed each day. Additional sets of test specimens shall be made, as directed by the Contracting Officer, when the mixture proportions are changed or when low strengths have been detected. A truly random (not

haphazard) sampling plan shall be developed by the Contractor and approved by the Contracting Officer prior to the start of construction. The plan shall assure that sampling is done in a completely random and unbiased manner. A set of test specimens for concrete with a 28-day specified strength per paragraph Strength Requirements in PART 1 shall consist of four specimens, two to be tested at 7 days and two at 28 days. A set of test specimens for concrete with a 90-day strength per the same paragraph shall consist of six specimens, two tested at 7 days, two at 28 days, and two at 90 days. Test specimens shall be molded and cured in accordance with ASTM C 31 and tested in accordance with ASTM C 39 for test cylinders and ASTM C 78 for test beams. Results of all strength tests shall be reported immediately to the Contracting Officer. Quality control charts shall be kept for individual strength "tests", ("test" as defined in parargraph Strength Requirements in PART 1) moving average of last 3 "tests" for strength, and moving average for range for the last 3 "tests" for each mixture. The charts shall be similar to those found in ACI 214.3R.

3.13.6 Inspection Before Placing

Foundations, construction joints, forms, and embedded items shall be inspected by the Contractor in sufficient time prior to each concrete placement in order to certify to the Contracting Officer that they are ready to receive concrete. The results of each inspection shall be reported in writing.

3.13.7 Placing

The placing foreman shall supervise placing operations, shall determine that the correct quality of concrete or grout is placed in each location as specified and as directed by the Contracting Officer, and shall be responsible for measuring and recording concrete temperatures and ambient temperature hourly during placing operations, weather conditions, time of placement, volume placed, and method of placement. The placing foreman shall not permit batching and placing to begin until it has been verified that an adequate number of vibrators in working order and with competent operators are available. Placing shall not be continued if any pile of concrete is inadequately consolidated. If any batch of concrete fails to meet the temperature requirements, immediate steps shall be taken to improve temperature controls.

3.13.8 Vibrators

The frequency and amplitude of each vibrator shall be determined in accordance with COE CRD-C 521 prior to initial use and at least once a month when concrete is being placed. Additional tests shall be made as directed when a vibrator does not appear to be adequately consolidating the concrete. The frequency shall be determined while the vibrator is operating in concrete with the tachometer being held against the upper end of the vibrator head while almost submerged and just before the vibrator is withdrawn from the concrete. The amplitude shall be determined with the head vibrating in air. Two measurements shall be taken, one near the tip and another near the upper end of the vibrator head, and these results averaged. The make, model, type, and size of the vibrator and frequency and amplitude results shall be reported in writing. Any vibrator not meeting the requirements of paragraph Consolidation, shall be immediately removed from service and repaired or replaced.

3.13.9 Curing Inspection

a. Moist Curing Inspections. At least once each shift, and not less than twice per day on both work and non-work days, an inspection shall be made of all areas subject to moist curing. The surface moisture condition shall be noted and recorded.

b. Moist Curing Corrective Action. When a daily inspection report lists an area of inadequate curing, immediate corrective action shall be taken, and the required curing period for those areas shall be extended by 1 day.

c. Membrane Curing Inspection. No curing compound shall be applied until the Contractor has verified that the compound is properly mixed and ready for spraying. At the end of each operation, the Contractor shall estimate the quantity of compound used by measurement of the container and the area of concrete surface covered, shall compute the rate of coverage in square feet per gallon, and shall note whether or not coverage is uniform.

d. Membrane Curing Corrective Action. When the coverage rate of the curing compound is less than that specified or when the coverage is not uniform, the entire surface shall be sprayed again.

e. Sheet Curing Inspection. At least once each shift and once per day on non-work days, an inspection shall be made of all areas being cured using impervious sheets. The condition of the covering and the tightness of the laps and tapes shall be noted and recorded.

f. Sheet Curing Corrective Action. When a daily inspection report lists any tears, holes, or laps or joints that are not completely closed, the tears and holes shall promptly be repaired or the sheets replaced, the joints closed, and the required curing period for those areas shall be extended by 1 day.

3.13.10 Cold-Weather Protection

At least once each shift and once per day on non-work days, an inspection shall be made of all areas subject to cold-weather protection. Any deficiencies shall be noted, corrected, and reported.

3.13.11 Mixer Uniformity

a. Stationary Mixers. Prior to the start of concrete placing and once every 6 months when concrete is being placed, or once for every 75,000 cubic yards of concrete placed, whichever results in the shortest time interval, uniformity of concrete mixing shall be determined in accordance with ASTM C 94.

b. Truck Mixers. Prior to the start of concrete placing and at least once every 6 months when concrete is being placed, uniformity of concrete mixing shall be determined in accordance with ASTM C 94. The truck mixers shall be selected randomly for testing. When satisfactory performance is found in one truck mixer, the performance of mixers of substantially the same design and condition of the blades may be regarded as satisfactory.

c. Mixer Uniformity Corrective Action. When a mixer fails to meet mixer uniformity requirements, either the mixing time shall be increased, batching sequence changed, batch size reduced, or adjustments shall be made to the mixer until compliance is achieved.

3.13.12 Reports

All results of tests or inspections conducted shall be reported informally as they are completed and in writing daily. A weekly report shall be prepared for the updating of control charts covering the entire period from the start of the construction season through the current week. During periods of cold-weather protection, reports of pertinent temperatures shall be made daily. These requirements do not relieve the Contractor of the obligation to report certain failures immediately as required in preceding paragraphs. Such reports of failures and the action taken shall be confirmed in writing in the routine reports. The Contracting Officer has the right to examine all contractor quality control records.

-- End of Section --

SECTION TABLE OF CONTENTS

DIVISION 03 - CONCRETE

SECTION 03450

PRECAST ARCHITECTURAL CONCRETE

11/88

PART 1 GENERAL

1.1 REFERENCES
1.2 GENERAL REQUIREMENTS
1.3 DESIGN
1.3.1 Standards and Loads
1.3.2 Connections
1.3.3 Concrete Strength
1.3.4 Concrete Proportion
1.3.5 Calculations
1.4 SUBMITTALS
1.5 STORAGE AND INSPECTION AT MANUFACTURER'S PLANT
1.6 HANDLING AND STORAGE

PART 2 PRODUCTS

2.1 MATERIALS
2.1.1 Aggregates
2.1.2 Reinforcing Steel
2.1.3 Prestressing Strands
2.1.4 Tie Wire
2.1.5 Inserts
2.1.6 Plates, Angles, Anchors and Embedments
2.1.7 Form Release Agent
2.1.8 Admixtures
2.2 PRECAST CONCRETE UNITS
2.2.1 Formwork
2.2.2 Reinforcement
2.2.3 Embedded Accessories
2.2.4 Stripping
2.2.5 Identification
2.2.6 Finishes
2.2.6.1 Exposed Surfaces
2.2.6.2 Other Surfaces

PART 3 EXECUTION

3.1 ERECTION
3.2 JOINT SEALING
3.3 CLEANING
3.4 PROTECTION OF WORK
3.5 DEFECTIVE WORK

-- End of Section Table of Contents --

SECTION 03450

PRECAST ARCHITECTURAL CONCRETE
11/88

PART 1 GENERAL

1.1 REFERENCES

The publications listed below form a part of this specification to the extent referenced. The publications are referred to in the text by basic designation only.

ACI INTERNATIONAL (ACI)

ACI 211.1	(1991) Standard Practice for Selecting Proportions for Normal, Heavyweight, and Mass Concrete
ACI 315	(1992) ACI Detailing Manual: Section Details and Detailing of Concrete Reinforcement
ACI 318/318R	(1989; Rev 1992; Errata) Building Code Requirements for Reinforced Concrete

AMERICAN SOCIETY FOR TESTING AND MATERIALS (ASTM)

ASTM A 416	(1994) Steel Strand, Uncoated Seven-Wire for Prestressed Concrete
ASTM C 494	(1992) Chemical Admixtures for Concrete
ASTM C 1017	(1992) Chemical Admixtures for Use in Producing Flowing Concrete

AMERICAN WELDING SOCIETY (AWS)

AWS D1.1	(1994) Structured Welding Code - Steel

PRECAST/PRESTRESSED CONCRETE INSTITUTE (PCI)

PCI Mnl-116	(1985) Manual for Quality Control for Plants and Production of Precast and Prestressed Concrete Products
PCI Mnl-117	(1977) Manual for Quality Control for Plants and Production of Architectural Precast Concrete Products
PCI Mnl-122	(1989) Architectural Precast Concrete

1.2 GENERAL REQUIREMENTS

Precast concrete units shall be designed and fabricated by an experienced and acceptable precast concrete manufacturer. The manufacturer shall have

been regularly and continuously engaged in the manufacture of precast concrete work similar to that indicated on the drawings for at least 3 years. Precast work shall be coordinated with the work of other trades.

1.3 DESIGN

1.3.1 Standards and Loads

Precast unit design shall conform to ACI 318/318R and PCI Mnl-122. Design loads for precast concrete shall be as indicated on the drawings. A differential temperature of 160 degrees F, between interior and exterior faces of the units, shall be considered in the design. Stresses due to restrained volume change caused by shrinkage and temperature differential, handling, transportation and erection shall be accounted for in the design.

1.3.2 Connections

Connection of units to other members, or to other units shall be of the type and configuration indicated. The design and sizing of connections for all design loads shall be by the Contractor.

1.3.3 Concrete Strength

Precast concrete units shall have a 28-day compressive strength of 5000 psi.

1.3.4 Concrete Proportion

Selection of proportions for concrete shall be based on the methodology presented in ACI 211.1 for normal weight concrete. The concrete proportion shall be developed using the same type and brand of cement, the same type and gradation of aggregates, and the same type and brand of admixture that will be used in the manufacture of precast concrete units for the project. Calcium chloride shall not be used in precast concrete and admixtures containing chloride ions, nitrates, or other substances that are corrosive shall not be used in prestressed concrete.

1.3.5 Calculations

Calculations for design of members and connections not shown shall be made by a professional engineer experienced in the design of precast architectural concrete. Calculation shall include the analysis of member for lifting stresses and the sizing of the lifting inserts.

1.4 SUBMITTALS

Government approval is required for submittals with a "GA" designation; submittals having an "FIO" designation are for information only. The following shall be submitted in accordance with Section 01300 SUBMITTAL PROCEDURES:

SD-01 Data

Calculations; GA.

Design calculations, prior to the manufacture of any precast architectural concrete units for the project.

Mix Design; GA.

A statement giving the maximum nominal coarse aggregate size, the proportions of all ingredients and the type and amount of any admixtures that will be used in the manufacture of each strength and type of concrete, prior to commencing operations. The statement shall be accompanied by test results from an approved testing laboratory, certifying that the proportions selected will produce concrete of the properties required. No substitutions shall be made without additional tests to verify that the concrete properties are satisfactory.

SD-04 Drawings

Architectural Concrete System; FIO.

Detail drawings showing details in accordance with ACI 315 and ACI 318/318R, including installation details. Detail drawings shall indicate separate identification marks for each different precast unit, location of units in the work, elevations, fabrication details, welding details, reinforcement, connections, dimensions, interface with adjacent members, blocking points for units stored at the precast concrete plant or at the jobsite, lifting points and special handling instructions in sufficient detail to cover manufacture, handling, and erection.

SD-09 Reports

Materials; FIO.

Certified copies of test reports including all test data and all test results. Tests for compressive strength of concrete shall be performed by an approved independent commercial testing laboratory, except that compressive strength tests for initial prestress may be performed in the manufacturer's plant laboratory.

SD-14 Samples

Precast Concrete Units; FIO.

A full-size mock-up, maintained at the precast concrete manufacturer's plant until approval by the Contracting Officer for removal or incorporating in the project. The mock-up shall be used to establish quality and acceptance of precast units to be used on the project, and shall consist of three or more units, showing the exterior finish (matrix color, surface color, surface texture), panel back finish, edge treatment, joint treatment, reinforcement, anchorage insert, lifting inserts, and other accessories. Mockup shall also include doors and windows and typical joints, including exterior corner joints and joints between units.

SD-18 Records

Manufacturer's Qualifications; FIO.

A statement giving the qualifications of the precast concrete manufacturer and of the installers, prior to commencing operations.

1.5 STORAGE AND INSPECTION AT MANUFACTURER'S PLANT

Precast units temporarily stored at the manufacturer's plant shall be protected from damage in accordance with PCI Mnl-116 and PCI Mnl-117 and PCI Mnl-122. Immediately prior to shipment to the jobsite, all precast

concrete units shall be inspected for quality to insure all precast units conform to the requirements specified. Inspection for quality will include but not necessarily be limited to the following elements; color, texture, dimensional tolerances, chipping, cracking, staining, warping and honeycombing. All defective precast concrete units shall be replaced or repaired as approved.

1.6 HANDLING AND STORAGE

Precast units shall be delivered to the site with delivery scheduled to avoid excessive build-up of units in storage at the site. Upon delivery to the jobsite all precast units shall be inspected for quality as specified in paragraph STORAGE AND INSPECTION AT MANUFACTURER'S PLANT. If the precast units cannot be unloaded and placed directly into the work, they shall be stored on site, off the ground and protected from weather, marring, or overload. Precast units shall be handled in accordance with manufacturer's instructions.

PART 2 PRODUCTS

2.1 MATERIALS

Except as otherwise specified, material shall conform to Section 03300 CAST-IN-PLACE STRUCTURAL CONCRETE and Section 03200 CONCRETE REINFORCEMENT.

2.1.1 Aggregates

Aggregates shall be as required to match existing design and finish.

2.1.2 Reinforcing Steel

Reinforcing steel shall be galvanized if clearance to an exterior face is 1 inch or less.

2.1.3 Prestressing Strands

Prestressing strands shall conform to ASTM A 416.

2.1.4 Tie Wire

Tie wire shall be soft monel or 18-8 stainless steel.

2.1.5 Inserts

Inserts shall be manufacturer's standard, suited for the application.

2.1.6 Plates, Angles, Anchors and Embedments

Material shall be as specified in PCI Mnl-117. Steel items, other than stainless, shall be coated with a rust-inhibiting paint or shall be hot-dip galvanized. Steel items, including items embedded in concrete, shall be either stainless steel or hot dip galvanized steel.

2.1.7 Form Release Agent

Release agent shall be manufacturer's standard nonstaining type.

2.1.8 Admixtures

Admixtures shall conform to ASTM C 494. Plasticizing admixture, if used, shall conform to ASTM C 1017.

2.2 PRECAST CONCRETE UNITS

Precast concrete units shall be manufactured and cured in accordance with the applicable provisions of PCI Mnl-116 and PCI Mnl-117. Units shall be manufactured within the allowable tolerances given in PCI Mnl-116, PCI Mnl-117 and PCI Mnl-122.

2.2.1 Formwork

Forms shall be steel of adequate thickness, braced, stiffened, anchored and aligned to produce precast architectural concrete units within required dimensional tolerances. Forms shall be sufficiently rigid to provide dimensional stability during handling and concrete placement and consolidation. Fiberglass-reinforced plastic, plastic coated wood, elastomeric or other nonabsorptive material shall be used for making tight joints and rustication pieces.

2.2.2 Reinforcement

Fabrication and placement of reinforcement shall conform to the details shown on the approved detail drawings and PCI Mnl-116 and PCI Mnl-117.

2.2.3 Embedded Accessories

Anchors, inserts, lifting devices, and other accessories which are to be embedded in the precast units shall be furnished and installed in accordance with the approved detail drawings. Embedded items shall be accurately positioned in their designed location, and shall have sufficient anchorage and embedment to satisfy design requirements.

2.2.4 Stripping

Precast concrete units shall not be removed from forms until units develop sufficient strength to safely strip the formwork and to remove the precast concrete units from the forms to prevent damage to the units from overstress or chipping.

2.2.5 Identification

Each precast concrete unit shall be marked to correspond to the identification marks for each different precast unit shown on the detail drawings.

2.2.6 Finishes

2.2.6.1 Exposed Surfaces

Surfaces of precast units exposed to view or surfaces indicated to be finished shall be finished as follows: The panels shall consist of areas that have a light sand blast finish and other raised areas that contain a exposed aggregate finish as required to match existing panels.

2.2.6.2 Other Surfaces

Surfaces of precast units not exposed to view or not otherwise indicated to be finished shall be finished in accordance with Section 03300

CAST-IN-PLACE STRUCTURAL CONCRETE.

PART 3 EXECUTION

3.1 ERECTION

Precast units shall be erected in accordance with the detail drawings and without damage to other units or to adjacent members. Units shall be set true to alignment and level, with joints properly spaced and aligned both vertically and horizontally. Erection tolerances shall be in accordance with the requirements of PCI Mnl-117 and PCI Mnl-122. As units are being erected, shims and wedges shall be placed as required to maintain correct alignment. After final attachment, precast units shall be grouted as shown. After erection, welds and abraded surfaces of steel shall be cleaned and touched-up with a zinc-rich paint. Welds shall be made by a certified welder in accordance with the manufacturer's erection drawings. Pickup points, boxouts, inserts, and the like shall be finished to match adjacent areas after erection. Erection of precast units shall be supervised and performed by workmen skilled in this type of work. Welding and the qualifications of welders shall be in accordance with AWS D1.1.

3.2 JOINT SEALING

Joint sealing shall be as specified in Section 07920 CALKING AND SEALANTS.

3.3 CLEANING

Not sooner than 72 hours after joints are sealed, faces and other exposed surfaces of precast concrete discolored during erection shall be cleaned to remove dirt and stains by dry scrubbing with a stiff fiber brush, wetting the surface and vigorous scrubbing of the finish with a stiff fiber brush followed by additional washing, or by chemical cleaning compounds such as detergents or other commercial cleaners. Commercial cleaners shall be used in accordance with the manufacturer's recommendations. Cleaning procedure shall be performed on a designated test area and shall be approved prior to proceeding with cleaning work. Discolorations which cannot be removed by these procedures, shall be considered defective work. Cleaning work shall be done when temperature and humidity conditions are such that surfaces dry rapidly. Care shall be taken during cleaning operations to protect adjacent surfaces from damage.

3.4 PROTECTION OF WORK

Precast units shall be protected against damage from subsequent operations.

3.5 DEFECTIVE WORK

Precast concrete units damaged during erection shall be repaired as soon after occurrence as possible or replaced, as directed, using approved procedures. All repairs to precast concrete units shall match the adjacent surfaces in color and texture and shall be as approved. Unless otherwise approved, repair procedures shall conform to PCI Mnl-116 and PCI Mnl-117.

-- End of Section --

SECTION TABLE OF CONTENTS

DIVISION 04 - MASONRY

SECTION 04200

MASONRY

07/92

PART 1 GENERAL

1.1 REFERENCES
1.2 SUBMITTALS
1.3 DELIVERY, HANDLING, AND STORAGE
1.3.1 Masonry Units
1.3.2 Reinforcement, Anchors, and Ties
1.3.3 Cementitious Materials, Sand and Aggregates

PART 2 PRODUCTS

2.1 GENERAL REQUIREMENTS
2.2 CONCRETE MASONRY UNITS (CMU)
2.2.1 Aggregates
2.2.2 Kinds and Shapes
2.2.3 Fire-Rated CMU
2.3 GLASS BLOCK UNITS AND ACCESSORIES
2.3.1 Glass Block Units
2.3.2 Horizontal Joint Reinforcement
2.3.3 Strip Anchor
2.3.4 Wire-Type Anchor
2.3.5 Expansion Strip
2.3.6 Packing (Backer Rods)
2.4 MORTAR
2.4.1 Admixtures
2.5 GROUT
2.5.1 Admixtures
2.5.2 Grout Barriers
2.6 ANCHORS, TIES, AND BAR POSITIONERS
2.6.1 Wire Mesh Ties
2.6.2 Bar Positioners
2.7 JOINT REINFORCEMENT
2.8 REINFORCING STEEL BARS AND RODS
2.9 CONTROL JOINT KEYS
2.10 EXPANSION-JOINT MATERIALS
2.11 INSULATION
2.11.1 Rigid Board-Type Insulation
2.11.1.1 Insulation Thickness and Air Space
2.11.1.2 R-Value
2.11.1.3 Recovered Material
2.11.2 Insulation Adhesive
2.12 FLASHING

PART 3 EXECUTION

3.1 ENVIRONMENTAL REQUIREMENTS

3.1.1 Hot Weather Installation
3.1.2 Cold Weather Installation
3.1.2.1 Preparation
3.1.2.2 Completed Masonry and Masonry Not Being Worked On
3.1.2.3 Glass Block Requirements
3.2 LAYING MASONRY UNITS
3.2.1 Surface Preparation
3.2.2 Forms and Shores
3.2.3 Concrete Masonry Units
3.2.4 Tolerances
3.2.5 Cutting and Fitting
3.2.6 Jointing
3.2.6.1 Flush Joints
3.2.6.2 Tooled Joints
3.2.6.3 Door and Window Frame Joints
3.2.7 Joint Widths
3.2.7.1 Concrete Masonry Units
3.2.8 Embedded Items
3.2.9 Unfinished Work
3.2.10 Masonry Wall Intersections
3.2.11 Partitions
3.3 GLASS BLOCK
3.4 MORTAR
3.5 REINFORCING STEEL
3.5.1 Positioning Bars
3.5.2 Splices
3.6 JOINT REINFORCEMENT
3.7 PLACING GROUT
3.7.1 Vertical Grout Barriers for Fully Grouted Walls
3.7.2 Horizontal Grout Barriers
3.7.3 Grout Holes and Cleanouts
3.7.3.1 Grout Holes
3.7.3.2 Cleanouts for Hollow Unit Masonry Construction
3.7.4 Grouting Equipment
3.7.4.1 Grout Pumps
3.7.4.2 Vibrators
3.7.5 Grout Placement
3.7.5.1 Low-Lift Method
3.7.5.2 High-Lift Method
3.8 BOND BEAMS
3.9 CONTROL JOINTS
3.10 CONCRETE MASONRY VENEER JOINTS
3.11 LINTELS
3.11.1 Masonry Lintels
3.11.2 Steel Lintels
3.12 ANCHORAGE TO CONCRETE AND STRUCTURAL STEEL
3.12.1 Anchorage to Structural Steel
3.13 INSULATION
3.14 POINTING AND CLEANING
3.14.1 Concrete Masonry Unit Surfaces
3.15 BEARING PLATES
3.16 PROTECTION
3.17 TEST REPORTS
3.17.1 Field Testing of Mortar
3.17.2 Field Testing of Grout
3.17.3 Efflorescence Test

-- End of Section Table of Contents --

SECTION 04200

MASONRY
07/92

PART 1 GENERAL

1.1 REFERENCES

The publications listed below form a part of this specification to the extent referenced. The publications are referred to in the text by basic designation only.

AMERICAN CONCRETE INSTITUTE (ACI)

ACI SP-66	(1988) ACI Detailing Manual

AMERICAN SOCIETY FOR TESTING AND MATERIALS (ASTM)

ASTM A 82	(1990a) Steel Wire, Plain, for Concrete Reinforcement
ASTM A 153	(1982; R 1987) Zinc Coating (Hot-Dip) on Iron and Steel Hardware
ASTM A 615	(1993) Deformed and Plain Billet-Steel Bars for Concrete Reinforcement
ASTM C 67	(1993a) Sampling and Testing Brick and Structural Clay Tile
ASTM C 90	(1993) Loadbearing Concrete Masonry Units
ASTM C 140	(1991) Sampling and Testing Concrete Masonry Units
ASTM C 270	(1992a) Mortar for Unit Masonry
ASTM C 476	(1991) Grout for Masonry
ASTM C 494	(1992) Chemical Admixtures for Concrete
ASTM C 578	(1992) Rigid, Cellular Polystyrene Thermal Insulation
ASTM C 641	(1982; R 1991) Staining Materials in Lightweight Concrete Aggregates
ASTM C 780	(1991) Preconstruction and Construction Evaluation of Mortars for Plain and Reinforced Unit Masonry
ASTM C 1019	(1989a; R 1993) Sampling and Testing Grout
ASTM C 1072	(1993) Measurement of Masonry Flexural Bond Strength

ASTM D 2000	(1990) Rubber Products in Automotive Applications
ASTM D 2240	(1991) Rubber Property - Durometer Hardness
ASTM D 2287	(1992) Nonrigid Vinyl Chloride Polymer and Copolymer Molding and Extrusion Compounds

1.2 SUBMITTALS

Government approval is required for submittals with a "GA" designation; submittals having an "FIO" designation are for information only. The following shall be submitted in accordance with SECTION 01300 SUBMITTAL PROCEDURES:

SD-04 Drawings

Masonry Work; FIO.

Drawings showing the location and layout of glass block units. Drawings including plans, elevations, and details of wall reinforcement; details of reinforcing bars at corners and wall intersections; offsets; tops, bottoms, and ends of walls; control and expansion joints; and wall openings. Bar splice locations shall be shown. Bent bars shall be identified on a bending diagram and shall be referenced and located on the drawings. Wall dimensions, bar clearances, and wall openings greater than one masonry unit in area shall be shown. No approval will be given to the shop drawings until the Contractor certifies that all openings, including those for mechanical and electrical service, are shown. If, during construction, additional masonry openings are required, the approved shop drawings shall be resubmitted with the additional openings shown along with the proposed changes. Location of these additional openings shall be clearly highlighted. The minimum scale for wall elevations shall be 1/4 inch per foot. Reinforcement bending details shall conform to the requirements of ACI SP-66.

SD-08 Statements

Cold Weather Installation; FIO.

Cold weather construction procedures.

SD-09 Reports

Efflorescence Test; FIO. Field Testing of Mortar; FIO. Field Testing of Grout; FIO. Fire-rated CMU; FIO.

Test reports from an approved independent laboratory. Test reports on a previously tested material shall be certified as the same as that proposed for use in this project.

Special Inspection; FIO.

Copies of masonry inspector reports.

SD-13 Certificates

Concrete Masonry Units (CMU); FIO. Control Joint Keys; FIO. Anchors,

Ties, and Bar Positioners; FIO. Expansion-Joint Materials; FIO. Joint Reinforcement; FIO. Reinforcing Steel Bars and Rods; FIO. Insulation; FIO. Grout Admixtures; FIO. Glass Block Units and Accessories; FIO.

Certificates of compliance stating that the materials meet the specified requirements.

Insulation; FIO.

Certificate attesting that the polyurethane or polyisocyanurate insulation furnished for the project contains recovered material, and showing an estimated percent of such recovered material.

SD-14 Samples

Concrete Masonry Units (CMU); FIO. Glass Block Units and Accessories; FIO.

Color samples of three stretcher units and one unit for each type of special shape. Units shall show the full range of color and texture.

Anchors, Ties, and Bar Positioners; FIO.

Two of each type used.

Expansion-Joint Material; FIO.

One piece of each type used.

Joint Reinforcement; FIO.

One piece of each type used, including corner and wall intersection pieces, showing at least two cross wires.

Insulation; FIO.

One piece of board type insulation, not less than 16 inches by 24 inches in size, containing the label indicating the rated permeance and R-values.

1.3 DELIVERY, HANDLING, AND STORAGE

Materials shall be delivered, handled, stored, and protected to avoid chipping, breakage, and contact with soil or contaminating material.

1.3.1 Masonry Units

Concrete masonry units shall be covered or protected from inclement weather and shall conform to the moisture content as specified in ASTM C 90 when delivered to the jobsite. In addition, glass block units shall be stored with their finish surfaces covered.

1.3.2 Reinforcement, Anchors, and Ties

Steel reinforcing bars, coated anchors, ties, and joint reinforcement shall be stored above the ground. Steel reinforcing bars and uncoated ties shall be free of loose mill scale and rust.

1.3.3 Cementitious Materials, Sand and Aggregates

Cementitious and other packaged materials shall be delivered in unopened

containers, plainly marked and labeled with manufacturers' names and brands. Cementitious material shall be stored in dry, weathertight enclosures or be completely covered. Cement shall be handled in a manner that will prevent the inclusion of foreign materials and damage by water or dampness. Sand and aggregates shall be stored in a manner to prevent contamination or segregation.

PART 2 PRODUCTS

2.1 GENERAL REQUIREMENTS

The source of materials which will affect the appearance of the finished work shall not be changed after the work has started except with Contracting Officer's approval.

2.2 CONCRETE MASONRY UNITS (CMU)

Hollow and solid concrete masonry units shall conform to ASTM C 90, Type I, Normal weight. Cement shall have a low alkali content and be of one brand.

2.2.1 Aggregates

Lightweight aggregates and blends of lightweight and heavier aggregates in proportions used in producing the units, shall comply with the following requirements when tested for stain-producing iron compounds in accordance with ASTM C 641: by visual classification method, the iron stain deposited on the filter paper shall not exceed the "light stain" classification.

2.2.2 Kinds and Shapes

Units shall be modular in size and shall include closer, jamb, header, lintel, and bond beam units and special shapes and sizes to complete the work as indicated. Provide units with bullnose corner as indicated on the Drawings. Radius of the bullnose shall be 1 inch. Units used in exposed masonry surfaces in any one building shall have a uniform fine to medium texture and a uniform color.

2.2.3 Fire-Rated CMU

Concrete masonry units used in fire-rated construction shown on the drawings shall be of minimum equivalent thickness for the fire rating indicated and the corresponding type of aggregates indicated in TABLE I. Units containing more than one of the aggregates listed in TABLE I will be rated on the aggregate requiring the greater minimum equivalent thickness to produce the required fire rating.

TABLE I

FIRE-RATED CONCRETE MASONRY UNITS

See note (a) below

Minimum equivalent thickness
in inches for fire rating of:

TABLE I

FIRE-RATED CONCRETE MASONRY UNITS

See note (a) below

Aggregate Type	4 hours	3 hours	2 hours
Pumice	4.7	4.0	3.0
Expanded slag	5.0	4.2	3.3
Expanded clay, shale, or slate	5.7	4.8	3.7
Limestone, scoria, cinders or unexpanded slag	5.9	5.0	4.0
Calcareous gravel	6.2	5.3	4.2
Siliceous gravel	6.7	5.7	4.5

(a) Minimum equivalent thickness shall equal net volume as determined in conformance with ASTM C 140 divided by the product of the actual length and height of the face shell of the unit in inches. Where walls are to receive plaster or be faced with brick, or otherwise form an assembly; the thickness of plaster or brick or other material in the assembly will be included in determining the equivalent thickness.

2.3 GLASS BLOCK UNITS AND ACCESSORIES

Glass block units shall be size, type, pattern, and style specified. Units shall be made of clear colorless glass. Pattern shall be clear with 75 percent light transmission allowance. Accessories shall be the products manufactured by or as recommended by the glass block manufacturer.

2.3.1 Glass Block Units

Units shall be Decora pattern and shall be 7-3/4 inches by 7-3/4 inches by 3-7/8 inches.

2.3.2 Horizontal Joint Reinforcement

Joint reinforcement shall be factory fabricated from steel wire, and shall conform to ASTM A 82. Wire shall be zinc coated after fabrication by the hot-dip process conforming to ASTM A 153, Class B-2. Reinforcement shall consist of two or more parallel longitudinal wires not lighter than 9 gauge weld connected with cross wires not lighter than 14 gauge at not greater than 8 inches on center. At least one longitudinal wire for each face of glass block shall be provided. Out-to-out spacing of the longitudinal wires shall be 1-1/2 inches less than the actual width of the block. Joint reinforcement in flat sections not less than 8 feet long shall be provided, except that corner reinforcements and other special shapes may be shorter.

2.3.3 Strip Anchor

Perforated steel strip shall be not less than 20 gauge, minimum of 1-3/4 inches wide by 24 inches long and galvanized after fabrication.

2.3.4 Wire-Type Anchor

Steel wire shall be not less than 9 gauge of approved design suitable for use with the panel stiffener provided and galvanized after fabrication.

2.3.5 Expansion Strip

Dense fibrous glass batt or material shall be as recommended by the glass block manufacturer.

2.3.6 Packing (Backer Rods)

Polyethylene foam, neoprene, or filler shall be as recommended by the sealant manufacturer.

2.4 MORTAR

Mortar shall be Type S in accordance with the proportion specification of ASTM C 270 except Type S cement-lime mortar proportions shall be 1 part cement, 1/2 part lime and 4-1/2 parts aggregate. Evaluation of performance shall be based on ASTM C 780 and ASTM C 1072. Cement shall have a low alkali content and be of one brand. Aggregates shall be from one source.

2.4.1 Admixtures

In cold weather, a non-chloride based accelerating admixture may be used subject to approval. Accelerating admixture shall be non-corrosive, shall contain less than 0.2 percent chlorides, and shall conform to ASTM C 494, Type C.

2.5 GROUT

Grout shall conform to ASTM C 476. Cement used in grout shall have a low alkali content. Grout slump shall be between 8 and 10 inches. Grout shall be used subject to the limitations of Table III. Proportions shall not be changed and materials with different physical or chemical characteristics shall not be used in grout for the work unless additional evidence is furnished that the grout meets the specified requirements.

2.5.1 Admixtures

In cold weather, a non-chloride based accelerating admixture may be used subject to approval. Accelerating admixture shall be non-corrosive, shall contain less than 0.2 percent chlorides, and shall conform to ASTM C 494, Type C.

2.5.2 Grout Barriers

Grout barriers for vertical cores shall consist of fine mesh wire, fiberglass, or expanded metal.

2.6 ANCHORS, TIES, AND BAR POSITIONERS

Anchors and ties shall be fabricated without drips or crimps and shall be zinc-coated in accordance with ASTM A 153, Class B-2. Steel wire used for anchors and ties shall be fabricated from steel wire conforming to ASTM A 82. Anchors and ties shall be sized to provide a minimum of 5/8 inch mortar cover from either face.

2.6.1 Wire Mesh Ties

Wire mesh for tying 4 inch thick concrete masonry unit partitions to other intersecting masonry partitions shall be 1/2 inch mesh of minimum 16 gauge steel wire. Minimum lengths shall be not less than 12 inches.

2.6.2 Bar Positioners

Bar positioners, used to prevent displacement of reinforcing bars during the course of construction, shall be factory fabricated from 9 gauge steel wire or equivalent, and coated with a hot-dip galvanized finish. Not more than one wire shall cross the cell.

2.7 JOINT REINFORCEMENT

Joint reinforcement shall be factory fabricated from steel wire conforming to ASTM A 82, welded construction. Tack welding will not be acceptable in reinforcement used for wall ties. Wire shall have zinc coating conforming to ASTM A 153, class B-2. All wires shall be a minimum of 9 gauge. Reinforcement shall be ladder type design, having one longitudinal wire in the mortar bed of each face shell for hollow units and one wire for solid units. Joint reinforcement shall be placed a minimum of 5/8 inch cover from either face. The distance between crosswires shall not exceed 16 inches. Joint reinforcement for straight runs shall be furnished in flat sections not less than 10 feet long. Joint reinforcement shall be provided with factory formed corners and intersections. If approved for use, joint reinforcement may be furnished with adjustable wall tie features.

2.8 REINFORCING STEEL BARS AND RODS

Reinforcing steel bars and rods shall conform to ASTM A 615, Grade 60.

2.9 CONTROL JOINT KEYS

Control joint keys shall be a factory fabricated solid section of natural or synthetic rubber (or combination thereof) conforming to ASTM D 2000 or polyvinyl chloride conforming to ASTM D 2287. The material shall be resistant to oils and solvents. The control joint key shall be provided with a solid shear section not less than 5/8 inch thick and 3/8 inch thick flanges, with a tolerance of plus or minus 1/16 inch. The control joint key shall fit neatly, but without forcing, in masonry unit jamb sash grooves. The control joint key shall be flexible at a temperature of minus 30 degrees F after five hours exposure, and shall have a durometer hardness of not less than 70 when tested in accordance with ASTM D 2240.

2.10 EXPANSION-JOINT MATERIALS

Backer rod and sealant shall be adequate to accommodate joint compression equal to 50 percent of the width of the joint. The backer rod shall be compressible rod stock of polyethylene foam, polyurethane foam, butyl rubber foam, or other flexible, nonabsorptive material as recommended by the sealant manufacturer. Sealant shall conform to Section 07920 JOINT SEALING.

2.11 INSULATION

2.11.1 Rigid Board-Type Insulation

Rigid board-type insulation shall be extruded polystyrene. Polystyrene shall conform to ASTM C 578. The insulation shall be a standard product and shall be marked with not less than the manufacturer's trademark or name the specification number, the permeance and R-values.

2.11.1.1 Insulation Thickness and Air Space

The cavity space shall allow for a maximum insulation thickness of 1-1/2 inches, and a minimum air space of 3/4 inch.

2.11.1.2 R-Value

The insulation shall provide a minimum R-value of 10 for the overall thickness.

2.11.1.3 Recovered Material

Insulation shall contain the highest practicable percentage of recovered material derived from solid waste (but material reused in the manufacturing process cannot be counted toward the percentage of recovered material). Where two materials have the same price and performance, the one containing the higher recovered material content shall be provided. The polyurethane or polyisocyanurate foam shall have a minimum recovered material content of 9 percent by weight of the core material.

2.11.2 Insulation Adhesive

Insulation adhesive shall be specifically prepared to adhere the insulation to the masonry and, where applicable, to the thru-wall flashing. The adhesive shall not deleteriously affect the insulation, and shall have a record of satisfactory and proven performance for the conditions under which to be used.

2.12 FLASHING

Flashing shall be as specified in Section 07600 SHEET METALWORK, GENERAL.

PART 3 EXECUTION

3.1 ENVIRONMENTAL REQUIREMENTS

3.1.1 Hot Weather Installation

The following precautions shall be taken if masonry is erected when the ambient air temperature is more than 99 degrees F in the shade and the relative humidity is less than 50 percent. All masonry materials shall be shaded from direct sunlight; mortar beds shall be spread no more than 4 feet ahead of masonry; masonry units shall be set within one minute of spreading mortar; and after erection, masonry shall be protected from direct exposure to wind and sun for 48 hours.

3.1.2 Cold Weather Installation

Before erecting masonry when ambient temperature or mean daily air

temperature falls below 40 degrees F, a written statement of proposed cold weather construction procedures shall be submitted for approval. The following precautions shall be taken during all cold weather erection.

3.1.2.1 Preparation

Ice or snow formed on the masonry bed shall be thawed by the application of heat. Heat shall be applied carefully until the top surface of the masonry is dry to the touch. Sections of masonry deemed frozen and damaged shall be removed before continuing construction of those sections.

a. Air Temperature 40 to 32 Degrees F. Sand or mixing water shall be heated to produce mortar temperatures between 40 degrees F and 120 degrees F.

b. Air Temperature 32 to 25 Degrees F. Sand and mixing water shall be heated to produce mortar temperatures between 40 degrees F and 120 degrees F. Temperature of mortar on boards shall be maintained above freezing.

c. Air Temperature 25 to 20 Degrees F. Sand and mixing water shall be heated to provide mortar temperatures between 40 degrees F and 120 degrees F. Temperature of mortar on boards shall be maintained above freezing. Sources of heat shall be used on both sides of walls under construction. Windbreaks shall be employed when wind is in excess of 15 mph.

d. Air Temperature 20 Degrees F and below. Sand and mixing water shall be heated to provide mortar temperatures between 40 degrees F and 120 degrees F. Enclosure and auxiliary heat shall be provided to maintain air temperature above 32 degrees F. Temperature of units when laid shall not be less than 20 degrees F.

3.1.2.2 Completed Masonry and Masonry Not Being Worked On

a. Mean daily air temperature 40 degrees F to 32 degrees F. Masonry shall be protected from rain or snow for 24 hours by covering with weather-resistive membrane.

b. Mean daily air temperature 32 degrees F to 25 degrees F. Masonry shall be completely covered with weather-resistant membrane for 24 hours.

c. Mean Daily Air Temperature 25 Degrees F to 20 Degrees F. Masonry shall be completely covered with insulating blankets or equally protected for 24 hours.

d. Mean Daily Temperature 20 Degrees F and Below. Masonry temperature shall be maintained above 32 degrees F for 24 hours by enclosure and supplementary heat, by electric heating blankets, infrared heat lamps, or other approved methods.

3.1.2.3 Glass Block Requirements

Glass block shall not be laid when the air temperature is below 40 degrees F on a falling thermometer, or when it appears probable that temperatures below 40 degrees F will be encountered before the mortar has set, unless adequate means are provided for protecting the work from freezing.

Protection shall consist of heating and maintaining the temperature of the glass block and mortar materials at not less than 40 degrees F and not more than 160 degrees F. After erection, an air temperature above 40 degrees F on both sides of the glass block shall be maintained for not less than 72 hours. Work will not be permitted with or on frozen materials. Glass block work may be started at 34 degrees F on a rising thermometer.

3.2 LAYING MASONRY UNITS

Masonry units shall be laid in running bond pattern. Facing courses shall be level with back-up courses, unless the use of adjustable ties has been approved in which case the tolerances shall be plus or minus 1/2 inch. Each unit shall be adjusted to its final position while mortar is still soft and plastic. Units that have been disturbed after the mortar has stiffened shall be removed, cleaned, and relaid with fresh mortar. Air spaces, cavities, chases, expansion joints, and spaces to be grouted shall be kept free from mortar and other debris. Units used in exposed masonry surfaces shall be free from chipped edges or other imperfections detracting from the appearance of the finished work. Vertical joints shall be kept plumb. Units being laid and surfaces to receive units shall be free of water film and frost. Solid units shall be laid in a nonfurrowed full bed of mortar. Mortar for veneer wythes shall be beveled and sloped toward the center of the wythe from the cavity side. Units shall be shoved into place so that the vertical joints are tight. Vertical joints of brick and the vertical face shells of concrete masonry units, except where indicated at control, expansion, and isolation joints, shall be completely filled with mortar. Mortar will be permitted to protrude up to 1/2 inch into the space or cells to be grouted.

3.2.1 Surface Preparation

Surfaces upon which masonry is placed shall be cleaned of laitance, dust, dirt, oil, organic matter, or other foreign materials and shall be slightly roughened to provide a surface texture with a depth of at least 1/8 inch. Sandblasting shall be used, if necessary, to remove laitance from pores and to expose the aggregate.

3.2.2 Forms and Shores

Forms and shores shall be sufficiently rigid to prevent deflections which may result in cracking or other damage to supported masonry and sufficiently tight to prevent leakage of mortar and grout. Supporting forms and shores shall not be removed in less than 10 days.

3.2.3 Concrete Masonry Units

Units in piers, pilasters, columns, starting courses on footings, solid foundation walls, lintels, and beams, and where cells are to be filled with grout shall be full bedded in mortar under both face shells and webs. Other units shall be full bedded under both face shells. Head joints shall be filled solidly with mortar for a distance in from the face of the unit not less than the thickness of the face shell. Foundation walls below grade shall be grouted solid. Jamb units shall be of the shapes and sizes to conform with wall units. Solid units may be incorporated in the masonry work where necessary to fill out at corners, gable slopes, and elsewhere as approved. Double walls shall be stiffened at wall-mounted plumbing fixtures by use of strap anchors, two above each fixture and two below each fixture, located to avoid pipe runs, and extending from center to center of the double wall. Walls and partitions shall be adequately reinforced for

support of wall-hung plumbing fixtures when chair carriers are not specified.

3.2.4 Tolerances

Masonry shall be laid plumb, true to line, with courses level. Bond pattern shall be kept plumb throughout. Corners shall be square unless noted otherwise. Except for walls constructed of prefaced concrete masonry units, masonry shall be laid within the following tolerances (plus or minus unless otherwise noted):

TABLE II

TOLERANCES

Variation from the plumb in the lines and surfaces of columns, walls and arises	
In adjacent masonry units	1/8 inch
In 10 feet	1/4 inch
In 20 feet	3/8 inch
In 40 feet or more	1/2 inch
Variations from the plumb for external corners, expansion joints, and other conspicuous lines	
In 20 feet	1/4 inch
In 40 feet or more	1/2 inch
Variations from the level for exposed lintels, sills, parapets, horizontal grooves, and other conspicuous lines	
In 20 feet	1/4 inch
In 40 feet or more	1/2 inch
Variation from level for bed joints and top surfaces of bearing walls	
In 10 feet	1/4 inch
In 40 feet or more	1/2 inch
Variations from horizontal lines	
In 10 feet	1/4 inch
In 20 feet	3/8 inch
In 40 feet or more	1/2 inch
Variations in cross sectional dimensions of columns and in thickness of walls	

TOLERANCES

Minus	1/4 inch
Plus	1/2 inch

3.2.5 Cutting and Fitting

Full units of the proper size shall be used wherever possible, in lieu of cut units. Cutting and fitting, including that required to accommodate the work of others, shall be done by masonry mechanics using power masonry saws. Concrete masonry units may be wet or dry cut. Wet cut units, before being placed in the work, shall be dried to the same surface-dry appearance as uncut units being laid in the wall. Cut edges shall be clean, true and sharp. Openings in the masonry shall be made carefully so that wall plates, cover plates or escutcheons required by the installation will completely conceal the openings and will have bottoms parallel with the masonry bed joints. Reinforced masonry lintels shall be provided above openings over 12 inches wide for pipes, ducts, cable trays, and other wall penetrations, unless steel sleeves are used.

3.2.6 Jointing

Joints shall be tooled when the mortar is thumbprint hard. Horizontal joints shall be tooled last. Joints shall be brushed to remove all loose and excess mortar. Mortar joints shall be finished as follows:

3.2.6.1 Flush Joints

Joints in concealed masonry surfaces and joints at electrical outlet boxes in wet areas shall be flush cut. Flush cut joints shall be made by cutting off the mortar flush with the face of the wall. Joints in unparged masonry walls below grade shall be pointed tight. Flush joints for architectural units, such as fluted units, shall completely fill both the head and bed joints.

3.2.6.2 Tooled Joints

Joints in exposed exterior and interior masonry surfaces shall be tooled slightly concave. Joints shall be tooled with a jointer slightly larger than the joint width so that complete contact is made along the edges of the unit. Tooling shall be performed so that the mortar is compressed and the joint surface is sealed. Jointer of sufficient length shall be used to obtain a straight and true mortar joint.

3.2.6.3 Door and Window Frame Joints

On the exposed interior side of exterior frames, joints between frames and abutting masonry walls shall be raked to a depth of 3/8 inch. On the exterior side of exterior frames, joints between frames and abutting masonry walls shall be raked to a depth of 3/8 inch.

3.2.7 Joint Widths

Joint widths shall be as follows:

3.2.7.1 Concrete Masonry Units

Concrete masonry units shall have 3/8 inch joints.

3.2.8 Embedded Items

Spaces around built-in items shall be filled with mortar. Openings around flush-mount electrical outlet boxes in wet locations shall be pointed with mortar. Anchors, ties, wall plugs, accessories, flashing, pipe sleeves and other items required to be built-in shall be embedded as the masonry work progresses. Anchors, and joint reinforcement shall be fully embedded in the mortar. Cells receiving anchor bolts and cells of the first course below bearing plates shall be filled with grout.

3.2.9 Unfinished Work

Unfinished work shall be stepped back for joining with new work. Toothing may be resorted to only when specifically approved. Loose mortar shall be removed and the exposed joints shall be thoroughly cleaned before laying new work.

3.2.10 Masonry Wall Intersections

Each course shall be masonry bonded at corners and elsewhere as shown. Masonry walls shall be anchored or tied together at corners and intersections with bond beam reinforcement and prefabricated corner or tee pieces of joint reinforcement as shown.

3.2.11 Partitions

Partitions shall be continuous from floor to underside of floor or roof deck where shown. Openings in firewalls around joists or other structural members shall be filled as indicated or approved. Where suspended ceilings on both sides of partitions are indicated, the partitions other than those shown to be continuous may be stopped approximately 4 inches above the ceiling level. An isolation joint shall be placed in the intersection between partitions and structural or exterior walls as shown. Interior partitions having 4 inch nominal thick units shall be tied to intersecting partitions of 4 inch units, 5 inches into partitions of 6 inch units, and 7 inches into partitions of 8 inch or thicker units. Cells within vertical plane of ties shall be filled solid with grout for full height of partition or solid masonry units may be used. Interior partitions having masonry walls over 4 inches thick shall be tied together with joint reinforcement. Partitions containing joint reinforcement shall be provided with prefabricated pieces at corners and intersections or partitions.

3.3 GLASS BLOCK

Glass block shall be installed as recommended by the glass block manufacturer and as specified in paragraph ENVIRONMENTAL REQUIREMENTS, after coordinating the work with other trades to accommodate embedded items.

3.4 MORTAR

Mortar shall be mixed in a mechanically operated mortar mixer for at least 3 minutes, but not more than 5 minutes. Measurement of ingredients for mortar shall be by volume. Ingredients not in containers, such as sand, shall be accurately measured by the use of measuring boxes. Water shall be mixed with the dry ingredients in sufficient amount to provide a workable mixture which will adhere to the vertical surfaces of masonry units. Mortar that has stiffened because of loss of water through evaporation

shall be retempered by adding water to restore the proper consistency and workability. Mortar that has reached its initial set or that has not been used within 2-1/2 hours after mixing shall be discarded.

3.5 REINFORCING STEEL

Reinforcement shall be cleaned of loose, flaky rust, scale, grease, mortar, grout, or other coating which might destroy or reduce its bond prior to placing grout. Bars with kinks or bends not shown on the drawings shall not be used. Reinforcement shall be placed prior to grouting. Unless otherwise indicated, vertical wall reinforcement shall extend to within 2 inches of tops of walls.

3.5.1 Positioning Bars

Vertical bars shall be accurately placed within the cells at the positions indicated on the drawings. A minimum clearance of 1/2 inch shall be maintained between the bars and masonry units. Minimum clearance between parallel bars shall be one diameter of the reinforcement. Vertical reinforcing may be held in place using bar positioners located near the ends of each bar and at intermediate intervals of not more than 192 diameters of the reinforcement. Column and pilaster ties shall be wired in position around the vertical steel. Ties shall be in contact with the vertical reinforcement and shall not be placed in horizontal bed joints.

3.5.2 Splices

Bars shall be lapped a minimum of 24 inches 40 diameters whichever is greater of the reinforcement. Welded or mechanical connections shall develop at least 125 percent of the specified yield strength of the reinforcement.

3.6 JOINT REINFORCEMENT

Joint reinforcement shall be installed at 16 inches on center or as indicated. Reinforcement shall be lapped not less than 6 inches. Prefabricated sections shall be installed at corners and wall intersections. The longitudinal wires of joint reinforcement shall be placed to provide not less than 5/8 inch cover to either face of the unit.

3.7 PLACING GROUT

Cells containing reinforcing bars shall be filled with grout. Hollow masonry units in walls or partitions supporting plumbing, heating, or other mechanical fixtures, voids at door and window jambs, and other indicated spaces shall be filled solid with grout. Cells under lintel bearings on each side of openings shall be filled solid with grout for full height of openings. Walls below grade, lintels, and bond beams shall be filled solid with grout. Units other than open end units may require grouting each course to preclude voids in the units. Grout not in place within 1-1/2 hours after water is first added to the batch shall be discarded. Sufficient time shall be allowed between grout lifts to preclude displacement or cracking of face shells of masonry units. If blowouts, flowouts, misalignment, or cracking of face shells should occur during construction, the wall shall be torn down and rebuilt.

3.7.1 Vertical Grout Barriers for Fully Grouted Walls

Grout barriers shall be provided not more than 30 feet apart, or as

required, to limit the horizontal flow of grout for each pour.

3.7.2 Horizontal Grout Barriers

Grout barriers shall be embedded in mortar below cells of hollow units receiving grout.

3.7.3 Grout Holes and Cleanouts

3.7.3.1 Grout Holes

Grouting holes shall be provided in slabs, spandrel beams, and other in-place overhead construction. Holes shall be located over vertical reinforcing bars or as required to facilitate grout fill in bond beams. Additional openings spaced not more than 16 inches on centers shall be provided where grouting of all hollow unit masonry is indicated. Openings shall not be less than 4 inches in diameter or 3 by 4 inches in horizontal dimensions. Upon completion of grouting operations, grouting holes shall be plugged and finished to match surrounding surfaces.

3.7.3.2 Cleanouts for Hollow Unit Masonry Construction

Cleanout holes shall be provided at the bottom of every pour in cores containing vertical reinforcement when the height of the grout pour exceeds 5 feet. Where all cells are to be grouted, cleanout courses shall be constructed using bond beam units in an inverted position to permit cleaning of all cells. Cleanout holes shall be provided at a maximum spacing of 32 inches where all cells are to be filled with grout. A new series of cleanouts shall be established if grouting operations are stopped for more than 4 hours. Cleanouts shall not be less than 3 by 4 inch openings cut from one face shell. Manufacturer's standard cutout units may be used at the Contractor's option. Cleanout holes shall not be closed until masonry work, reinforcement, and final cleaning of the grout spaces have been completed and inspected. For walls which will be exposed to view, cleanout holes shall be closed in an approved manner to match surrounding masonry.

3.7.4 Grouting Equipment

3.7.4.1 Grout Pumps

Pumping through aluminum tubes will not be permitted. Pumps shall be operated to produce a continuous stream of grout without air pockets, segregation, or contamination. Upon completion of each day's pumping, waste materials and debris shall be removed from the equipment, and disposed of outside the masonry.

3.7.4.2 Vibrators

Internal vibrators shall maintain a speed of not less than 5,000 impulses per minute when submerged in the grout. At least one spare vibrator shall be maintained at the site at all times. Vibrators shall be applied at uniformly spaced points not further apart than the visible effectiveness of the machine. Duration of vibration shall be limited to time necessary to produce satisfactory consolidation without causing segregation.

3.7.5 Grout Placement

Masonry shall be laid to the top of a pour before placing grout. Grout

shall not be placed in two-wythe solid unit masonry cavity until mortar joints have set for at least 3 days during hot weather and 5 days during cold damp weather. Grout shall not be placed in hollow unit masonry until mortar joints have set for at least 24 hours. Grout shall be placed using a hand bucket, concrete hopper, or grout pump to completely fill the grout spaces without segregation of the aggregates. Vibrators shall not be inserted into lower pours that are in a semi-solidified state. The height of grout pours and type of grout used shall be limited by the dimensions of grout spaces as indicated in Table III. Low-lift grout methods may be used on pours up to and including 5 feet in height. High-lift grout methods shall be used on pours exceeding 5 feet in height.

3.7.5.1 Low-Lift Method

Grout shall be placed at a rate that will not cause displacement of the masonry due to hydrostatic pressure of the grout. Mortar protruding more than 1/2 inch into the grout space shall be removed before beginning the grouting operation. Grout pours 12 inches or less in height shall be consolidated by mechanical vibration or by puddling. Grout pours over 12 inches in height shall be consolidated by mechanical vibration and reconsolidated by mechanical vibration after initial water loss and settlement has occurred. Vibrators shall not be inserted into lower pours that are in a semi-solidified state. Low-lift grout shall be used subject to the limitations of Table III.

3.7.5.2 High-Lift Method

Mortar droppings shall be cleaned from the bottom of the grout space and from reinforcing steel. Mortar protruding more than 1/4 inch into the grout space shall be removed by dislodging the projections with a rod or stick as the work progresses. Reinforcing, bolts, and embedded connections shall be rigidly held in position before grouting is started. CMU units shall not be pre-wetted. Grout, from the mixer to the point of deposit in the grout space shall be placed as rapidly as practical by pumping and placing methods which will prevent segregation of the mix and cause a minimum of grout splatter on reinforcing and masonry surfaces not being immediately encased in the grout lift. The individual lifts of grout shall be limited to 4 feet in height. The first lift of grout shall be placed to a uniform height within the pour section and vibrated thoroughly to fill all voids. This first vibration shall follow immediately behind the pouring of the grout using an approved mechanical vibrator. After a waiting period sufficient to permit the grout to become plastic, but before it has taken any set, the succeeding lift shall be poured and vibrated 12 to 18 inches into the preceding lift. If the placing of the succeeding lift is going to be delayed beyond the period of workability of the preceding, each lift shall be reconsolidated by reworking with a second vibrator as soon as the grout has taken its settlement shrinkage. The waiting, pouring, and reconsolidation steps shall be repeated until the top of the pour is reached. The top lift shall be reconsolidated after the required waiting period. The high-lift grouting of any section of wall between vertical grout barriers shall be completed to the top of a pour in one working day unless a new series of cleanout holes is established and the resulting horizontal construction joint cleaned. High-lift grout shall be used subject to the limitations in Table III.

TABLE III

POUR HEIGHT AND TYPE OF GROUT FOR VARIOUS GROUT SPACE DIMENSIONS

Maximum Grout Pour Height (feet) (4)	Grout Type	Grouting Procedure	Minimum Dimensions of the Total Clear Areas Within Grout Spaces and Cells (in.) (1,2) Multiwythe Masonry (3)	Hollow-unit Masonry
1	Fine	Low Lift	3/4	1-1/2 x 2
5	Fine	Low Lift	2	2 x 3
8	Fine	High Lift	2	2 x 3
12	Fine	High Lift	2-1/2	2-1/2 x 3
24	Fine	High Lift	3	3 x 3
1	Coarse	Low Lift	1-1/2	1-1/2 x 3
5	Coarse	Low Lift	2	2-1/2 x 3
8	Coarse	High Lift	2	3 x 3
12	Coarse	High Lift	2-1/2	3 x 3
24	Coarse	High Lift	3	3 x 4

Notes:

(1) The actual grout space or cell dimension must be larger than the sum of the following items:
a) The required minimum dimensions of total clear areas given in the table above;
b) The width of any mortar projections within the space;
c) The horizontal projections of the diameters of the horizontal reinforcing bars within a cross section of the grout space or cell.

(2) The minimum dimensions of the total clear areas shall be made up of one or more open areas, with at least one area being 3/4 inch or greater in width.

(3) For grouting spaces between masonry wythes.

(4) Where only cells of hollow masonry units containing reinforcement are grouted, the maximum height of the pour shall not exceed the distance between horizontal bond beams.

3.8 BOND BEAMS

Bond beams shall be filled with grout and reinforced as indicated on the drawings. Grout barriers shall be installed under bond beam units to retain the grout as required. Reinforcement shall be continuous, including around corners, except through control joints or expansion joints, unless otherwise indicated on the drawings. Where splices are required for continuity, reinforcement shall be lapped 48 bar diameters. A minimum clearance of 1/2 inch shall be maintained between reinforcement and interior faces of units.

3.9 CONTROL JOINTS

Control joints shall be provided as indicated and shall be constructed by using mortar to fill the head joint in accordance with the details shown on the drawings. Sash jamb units shall have a 3/4 by 3/4 inch groove near the center at end of each unit. The vertical mortar joint at control

joint locations shall be continuous, including through all bond beams. This shall be accomplished by utilizing half blocks in alternating courses on each side of the joint. The control joint key shall be interrupted in courses containing continuous bond beam steel. In single wythe exterior masonry walls, the exterior control joints shall be raked to a depth of 3/4 inch; backer rod and sealant shall be installed in accordance with Section 07920 JOINT SEALING. Exposed interior control joints shall be raked to a depth of 1/4 inch. Concealed control joints shall be flush cut.

3.10 CONCRETE MASONRY VENEER JOINTS

Concrete masonry veneer joints shall be provided and constructed as shown on the drawings. Joints shall be kept free of mortar and other debris.

3.11 LINTELS

3.11.1 Masonry Lintels

Masonry lintels shall be constructed with lintel units filled solid with grout in all courses and reinforced with a minimum of two No. 4 bars in the bottom course unless otherwise indicated on the drawings. Lintel reinforcement shall extend beyond each side of masonry opening 40 bar diameters or 24 inches, whichever is greater. Reinforcing bars shall be supported in place prior to grouting and shall be located 1/2 inch above the bottom inside surface of the lintel unit.

3.11.2 Steel Lintels

Steel lintels shall be as shown on the drawings. Lintels shall be set in a full bed of mortar with faces plumb and true. Steel lintels shall have a minimum bearing length of 8 inches unless otherwise indicated on the drawings.

3.12 ANCHORAGE TO CONCRETE AND STRUCTURAL STEEL

3.12.1 Anchorage to Structural Steel

Masonry shall be anchored to vertical structural steel framing as indicated on the Drawings.

3.13 INSULATION

Anchored veneer walls shall be insulated, where shown, by installing board-type insulation on the cavity side of the inner wythe. Board type insulation shall be applied directly to the masonry or thru-wall flashing with adhesive. Insulation shall be neatly fitted between obstructions without impaling of insulation on ties or anchors. The insulation shall be applied in parallel courses with vertical joints breaking midway over the course below and shall be applied in moderate contact with adjoining units without forcing, and shall be cut to fit neatly against adjoining surfaces.

3.14 POINTING AND CLEANING

After mortar joints have attained their initial set, but prior to hardening, mortar and grout daubs or splashings shall be completely removed from masonry-unit surfaces that will be exposed or painted. Before completion of the work, defects in joints of masonry to be exposed or painted shall be raked out as necessary, filled with mortar, and tooled to

match existing joints. Immediately after grout work is completed, scum and stains which have percolated through the masonry work shall be removed using a high pressure stream of water and a stiff bristled brush. Masonry surfaces shall not be cleaned, other than removing excess surface mortar, until mortar in joints has hardened. Masonry surfaces shall be left clean, free of mortar daubs, dirt, stain, and discoloration, including scum from cleaning operations, and with tight mortar joints throughout. Metal tools and metal brushes shall not be used for cleaning.

3.14.1 Concrete Masonry Unit Surfaces

Exposed concrete masonry unit surfaces shall be dry-brushed at the end of each day's work and after any required pointing, using stiff-fiber bristled brushes.

3.15 BEARING PLATES

Bearing plates for beams, joists, joist girders and similar structural members shall be set to the proper line and elevation with damp-pack bedding mortar, except where non-shrink grout is indicated. Bedding mortar and non-shrink grout shall be as specified in Section 03300 CAST-IN-PLACE STRUCTURAL CONCRETE.

3.16 PROTECTION

Facing materials shall be protected against staining. Top of walls shall be covered with nonstaining waterproof covering or membrane when work is not in progress. Covering of the top of the unfinished walls shall continue until the wall is waterproofed with a complete roof or parapet system. Covering shall extend a minimum of 2 feet down on each side of the wall and shall be held securely in place. Before starting or resuming, top surface of masonry in place shall be cleaned of loose mortar and foreign material.

3.17 TEST REPORTS

3.17.1 Field Testing of Mortar

At least three specimens of mortar shall be taken each day. A layer of mortar 1/2 to 5/8 inch thick shall be spread on the masonry units and allowed to stand for one minute. The specimens shall then be prepared and tested for compressive strength in accordance with ASTM C 780.

3.17.2 Field Testing of Grout

Field sampling and testing of grout shall be in accordance with the applicable provisions of ASTM C 1019. A minimum of three specimens of grout per day shall be sampled and tested. Each specimen shall have a minimum ultimate compressive strength of 2000 psi at 28 days.

3.17.3 Efflorescence Test

Brick which will be exposed to weathering shall be tested for efflorescence. Tests shall be scheduled far enough in advance of starting masonry work to permit retesting if necessary. Sampling and testing shall conform to the applicable provisions of ASTM C 67. Units meeting the definition of "effloresced" will be subjected to rejection.

-- End of Section --

SECTION TABLE OF CONTENTS

DIVISION 05 - METALS

SECTION 05120

STRUCTURAL STEEL

04/89

PART 1 GENERAL

1.1 REFERENCES
1.2 GENERAL REQUIREMENTS
1.3 SUBMITTALS
1.4 STORAGE

PART 2 PRODUCTS

2.1 STRUCTURAL STEEL
2.1.1 Carbon Grade Steel
2.2 STRUCTURAL TUBING
2.3 HIGH STRENGTH BOLTS AND NUTS
2.4 CARBON STEEL BOLTS
2.5 NUTS DIMENSIONAL STYLE
2.6 WASHERS
2.7 PAINT

PART 3 EXECUTION

3.1 FABRICATION
3.2 ERECTION
3.2.1 Connections
3.2.2 Base Plates and Bearing Plates
3.2.3 Field Welded Connections
3.2.4 Field Priming

-- End of Section Table of Contents --

SECTION 05120

STRUCTURAL STEEL
04/89

PART 1 GENERAL

1.1 REFERENCES

The publications listed below form a part of this specification to the extent referenced. The publications are referred to in the text by basic designation only.

AMERICAN INSTITUTE OF STEEL CONSTRUCTION (AISC)

AISC-01	(1993) Load & Resistance Factor Design Manual Vol. 1 - Structural Members, Specifications, and Codes
AISC-02	(1993) Load & Resistance Factor Design Manual Vol. II - Connections
AISC-04	(1989) Specification for Structural Steel Buildings - Allowable Stress Design and Plastic Design
AISC S303	(1992) Code of Standard Practice for Steel Buildings and Bridges
AISC 342	(1993) Load and Resistance Factor Design Specification for Structural Steel Buildings

AMERICAN SOCIETY FOR TESTING AND MATERIALS (ASTM)

ASTM A 6	(1993b) General Requirements for Rolled Steel Plates, Shapes, Sheet Piling, and Bars for Structural Use
ASTM A 36	(1993a) Structural Steel
ASTM A 307	(1993a) Carbon Steel Bolts and Studs, 60 000 PSI Tensile Strength
ASTM A 325	(1993) Structural Bolts, Steel, Heat Treated, 120/105 ksi Minimum Tensile Strength
ASTM A 490	(1993) Heat-Treated Steel Structural Bolts, 150 ksi Minimum Tensile Strength
ASTM A 500	(1993) Cold-Formed Welded and Seamless Carbon Steel Structural Tubing in Rounds and Shapes
ASTM A 529	(1993) High-Strength Carbon-Manganese

	Steel of Structural Quality
ASTM A 563	(1993) Carbon and Alloy Steel Nuts
ASTM F 436	(1993) Hardened Steel Washers
ASTM F 844	(1990) Washers, Steel, Plain (Flat), Unhardened for General Use

AMERICAN SOCIETY OF MECHANICAL ENGINEERS (ASME)

ASME B46.1	(1985) Surface Texture (Surface Roughness, Waviness and Lay)

AMERICAN WELDING SOCIETY (AWS)

AWS A2.4	(1993) Standard Symbols for Welding, Brazing and Nondestructive Examination
AWS D1.1	(1994) Structural Welding Code - Steel

STEEL STRUCTURES PAINTING COUNCIL (SSPC)

SSPC Paint 25	(1991) Red Iron Oxide, Zinc Oxide, Raw Linseed Oil and Alkyd Primer (without Lead and Chromate Pigments)

1.2 GENERAL REQUIREMENTS

Structural steel fabrication and erection shall be performed by an organization experienced in structural steel work of equivalent magnitude. The Contractor shall be responsible for correctness of detailing, fabrication, and for the correct fitting of structural members. Connections, for any part of the structure not shown on the contract drawings, shall be considered simple shear connections and shall be designed and detailed in accordance with pertinent provisions of AISC-01 and AISC-02. Substitution of sections or modification of connection details will not be accepted unless approved by the Contracting Officer. AISC 342 with pertinent provisions of AISC-01 and AISC-02 shall govern the work. Welding shall be in accordance with AWS D1.1.

1.3 SUBMITTALS

Government approval is required for submittals with a "GA" designation; submittals having an "FIO" designation are for information only. The following shall be submitted in accordance with Section 01300 SUBMITTAL PROCEDURES:

SD-04 Drawings

Structural Steel System; GA. Structural Connections; GA.

Shop and erection details including members (with their connections) not shown on the contract drawings. Welds shall be indicated by standard welding symbols in accordance with AWS A2.4.

SD-08 Statements

Erection; FIO.

Erection plan of the structural steel framing required. Erection plan shall conform to the requirements of AISC S303, shall be submitted prior to erection, and shall describe all necessary temporary supports, including the sequence of installation and removal.

SD-13 Certificates

Mill Test Reports; FIO.

Certified copies of mill test reports for structural steel, structural bolts, nuts, washers and other related structural steel items.

Welder Qualifications; FIO.

Certified copies of welder qualifications test records showing qualification in accordance with AWS D1.1.

Fabrication; FIO.

A copy of the AISC certificate indicating that the fabrication plant meets the specified structural steelwork category.

SD-14 Samples

Carbon Steel Bolts and Nuts; FIO. Nuts Dimensional Style; FIO. Washers; FIO.

Random samples of bolts, nuts, and washers as delivered to the job site if requested, taken in the presence of the Contracting Officer and provided to the Contracting Officer for testing to establish compliance with specified requirements.

1.4 STORAGE

Material shall be stored out of contact with the ground in such manner and location as will minimize deterioration.

PART 2 PRODUCTS

2.1 STRUCTURAL STEEL

2.1.1 Carbon Grade Steel

Carbon grade steel shall conform to ASTM A 36 or ASTM A 529.

2.2 STRUCTURAL TUBING

Structural tubing shall conform to ASTM A 500, Grade B.

2.3 HIGH STRENGTH BOLTS AND NUTS

High strength bolts shall conform to ASTM A 325, Type 1 with carbon steel nuts conforming to ASTM A 563, Grade C.

2.4 CARBON STEEL BOLTS

Carbon steel bolts shall conform to ASTM A 307, Grade A with carbon steel nuts conforming to ASTM A 563, Grade A.

2.5 NUTS DIMENSIONAL STYLE

Carbon steel nuts shall be Hex Style when used with ASTM A 307 bolts or Heavy Hex style when used with ASTM A 325 or ASTM A 490 bolts.

2.6 WASHERS

Plain washers shall conform to ASTM F 844. Other types, when required, shall conform to ASTM F 436.

2.7 PAINT

Paint shall conform to SSPC Paint 25. Steel members that receive sprayed fireproofing as specified in Section 07250, Spray-Applied Fireproofing shall not receive paint or primer.

PART 3 EXECUTION

3.1 FABRICATION

Fabrication shall be in accordance with the applicable provisions of AISC-04. Fabrication and assembly shall be done in the shop to the greatest extent possible. The fabricating plant shall be certified under the AISC quality certification program for Category I structural steelwork. Compression joints depending on contact bearing shall have a surface roughness not in excess of 500 micro inches as determined by ASME B46.1, and ends shall be square within the tolerances for milled ends specified in ASTM A 6. Structural steelwork, except surfaces of steel to be encased in concrete, surfaces to be field welded, surfaces to be fireproofed, and contact surfaces of friction-type high-strength bolted connections shall be prepared for painting in accordance with the AISC-04 and primed with the specified paint.

3.2 ERECTION

Erection of structural steel shall be in accordance with the applicable provisions of AISC-04.

3.2.1 Connections

Anchor bolts and other connections between the structural steel and foundations shall be provided and shall be properly located and built into connecting work.

3.2.2 Base Plates and Bearing Plates

Column base plates for columns and bearing plates for beams, girders, and similar members shall be provided. Base plates and bearing plates shall be provided with full bearing after the supported members have been plumbed and properly positioned, but prior to placing superimposed loads. Separate setting plates under column base plates will not be permitted. The area under the plate shall be damp-packed solidly with bedding mortar, except where nonshrink grout is indicated on the drawings. Bedding mortar and grout shall be as specified in Section 03300 CAST-IN-PLACE STRUCTURAL CONCRETE.

3.2.3 Field Welded Connections

Field welded structural connections shall be completed before load is applied.

3.2.4 Field Priming

After erection, the field bolt heads and nuts, field welds, and any abrasions in the shop coat shall be cleaned and primed with paint of the same quality as that used for the shop coat.

-- End of Section --

SECTION TABLE OF CONTENTS

DIVISION 05 - METALS

SECTION 05210

STEEL JOISTS

11/88

PART 1 GENERAL

1.1 REFERENCES
1.2 SUBMITTALS
1.3 DESCRIPTION
1.4 DELIVERY AND STORAGE

PART 2 PRODUCTS

2.1 OPEN WEB STEEL JOISTS
2.2 ACCESSORIES AND FITTINGS
2.3 SHOP PAINTING

PART 3 EXECUTION

3.1 ERECTION
3.2 BEARING PLATES

-- End of Section Table of Contents --

SECTION 05210

STEEL JOISTS
11/88

PART 1 GENERAL

1.1 REFERENCES

The publications listed below form a part of this specification to the extent referenced. The publications are referred to in the text by basic designation only.

STEEL JOIST INSTITUTE (SJI)

SJI-01	(1994) Standard Specifications Load Tables and Weight Tables for Steel Joists and Joist Girders

1.2 SUBMITTALS

Government approval is required for submittals with a "GA" designation; submittals having an "FIO" designation are for information only. The following shall be submitted in accordance with Section 01300 SUBMITTAL PROCEDURES:

SD-04 Drawings

Steel Joists; FIO.

Detail drawings shall include fabrication and erection details, specifications for shop painting, and identification markings of joists and joist girders.

SD-13 Certificates

Steel Joists; FIO.

Certificates stating that the steel joists have been designed and manufactured in accordance with SJI-01. Complete engineering design computations may be submitted in lieu of the certification.

1.3 DESCRIPTION

Steel joists are designated on the drawings in accordance with the standard designations of the Steel Joist Institute. Joists of other standard designations or joists with properties other than those shown may be substituted for the joists designated provided the structural properties are equal to or greater than those of the joists shown and provided all other specified requirements are met.

1.4 DELIVERY AND STORAGE

Materials shall be delivered to the site in undamaged condition and stored off the ground in a well drained location, protected from damage, and easily accessible for inspection and handling.

PART 2 PRODUCTS

2.1 OPEN WEB STEEL JOISTS

Open web steel joists shall conform to SJI-01, KCS-Series. Joists shall be designed to support the loads given in the standard load tables of SJI-01 and any additional concentrated loads.

2.2 ACCESSORIES AND FITTINGS

Accessories and fittings, including end supports and bridging, shall be in accordance with the standard specifications under which the members were designed.

2.3 SHOP PAINTING

Joists and accessories shall be shop painted with a rust-inhibiting primer paint. For joists which will be finish painted under Section 09900 PAINTING, GENERAL, the primer paint shall be limited to a primer which is compatible with the specified finish paint.

PART 3 EXECUTION

3.1 ERECTION

Installation of joists shall be in accordance with the standard specification under which the member was produced. Joists shall be handled in a manner to avoid damage. Damaged joists shall be removed from the site, except when field repair is approved and such repairs are satisfactorily made in accordance with the manufacturer's recommendations.

Joists shall be accurately set, and end anchorage shall be in accordance with the standard specification under which the joists were produced. For spans over 40 ft through 60 ft one row of bridging nearest midspan shall be bolted diagonal bridging; for spans over 60 ft bolted diagonal bridging shall be used instead of welded horizontal bridging. Joist bridging and anchoring shall be secured in place prior to the application of any construction loads. Any temporary loads shall be distributed so that the carrying capacity of any joist is not exceeded. Loads shall not be applied to bridging during construction or in the completed work. Abraded, corroded, and field welded areas shall be cleaned and touched up with the same type of paint used in the shop painting.

3.2 BEARING PLATES

Bearing plates shall be provided with full bearing after the supporting members have been plumbed and properly positioned, but prior to placing superimposed loads. The area under the plate shall be damp-packed solidly with bedding mortar, except where nonshrink grout is indicated on the drawings. Bedding mortar and grout shall be as specified in Section 03300 CAST-IN-PLACE STRUCTURAL CONCRETE.

-- End of Section --

SECTION TABLE OF CONTENTS

DIVISION 05 - METALS

SECTION 05300

STEEL DECKING

10/89

PART 1 GENERAL

1.1 REFERENCES
1.2 SUBMITTALS
1.3 DELIVERY, STORAGE, AND HANDLING

PART 2 PRODUCTS

2.1 DECK UNITS
2.1.1 Roof Deck
2.1.2 Acoustical Deck Units
2.1.3 Sump Pans
2.2 TOUCH-UP PAINT
2.3 ADJUSTING PLATES
2.4 CLOSURE PLATES
2.4.1 Closure Plates for Roof Deck
2.4.1.1 Cover Plates to Close Panels
2.4.1.2 Column Closures to Close Openings
2.4.1.3 Sheet Metal
2.5 ACCESSORIES

PART 3 EXECUTION

3.1 ERECTION
3.2 ATTACHMENTS
3.3 HOLES AND OPENINGS

-- End of Section Table of Contents --

SECTION 05300

STEEL DECKING
10/89

PART 1 GENERAL

1.1 REFERENCES

The publications listed below form a part of this specification to the extent referenced. The publications are referred to in the text by basic designation only.

AMERICAN IRON AND STEEL INSTITUTE (AISI)

AISI SG-673	(1987) Cold-Formed Steel Design Manual

AMERICAN SOCIETY FOR TESTING AND MATERIALS (ASTM)

ASTM A 446	(1993) Steel Sheet, Zinc-Coated (Galvanized) by the Hot-Dip Process, Structural (Physical) Quality
ASTM A 525	(1993) General Requirements for Steel Sheet, Zinc-Coated (Galvanized) by the Hot-Dip Process
ASTM A 611	(1994) Steel, Sheet, Carbon, Cold-Rolled, Structural Quality
ASTM A 780	(1993a) Repair of Damaged and Uncoated Areas of Hot-Dipped Galvanized Coatings
ASTM A 792	(1993a) Steel Sheet, 55% Aluminum-Zinc Alloy-Coated by the Hot-Dip Process, General Requirements
ASTM C 423	(1990a) Sound Absorption and Sound Absorption Coefficients by the Reverberation Room Method
ASTM E 795	(1993) Mounting Test Specimens During Sound Absorption Tests

AMERICAN WELDING SOCIETY (AWS)

AWS D1.3	(1989) Structural Welding Code - Sheet Steel

STEEL DECK INSTITUTE (SDI)

SDI-02	(1987; Amended 1991) Diaphragm Design Manual

SDI Pub No 28	(1992) Design Manual for Composite Decks, Form Decks, Roof Decks, and Cellular Metal Floor Deck with Electrical Distribution

STEEL STRUCTURES PAINTING COUNCIL (SSPC)

SSPC Paint 20	(1991) Zinc-Rich Primers (Type I - Inorganic and Type II - Organic)

1.2 SUBMITTALS

Government approval is required for submittals with a "GA" designation; submittals having an "FIO" designation are for information only. The following shall be submitted in accordance with Section 01300 SUBMITTAL PROCEDURES:

SD-01 Data

Deck Units; FIO.

Design computations for the structural properties of the deck units or SDI certification that the units are designed in accordance with SDI specifications.

SD-04 Drawings

Deck Units; FIO. Accessories; FIO.
Attachments; FIO. Holes and Openings; FIO.

Drawings shall include type, configuration, structural properties, location, and necessary details of deck units, accessories, and supporting members; size and location of holes to be cut and reinforcement to be provided; location and sequence of welded or fastener connections; and the manufacturer's erection instructions.

SD-13 Certificates

Deck Units; FIO. Attachments; FIO.

Manufacturer's certificates attesting that the decking material meets the specified requirements. Manufacturer's certificate attesting that the operators are authorized to use the low-velocity piston tool.

SD-14 Samples

Deck Units; FIO. Accessories; FIO.

A 2 sq. ft. sample of the decking material to be used, along with a sample of each of the accessories used. A sample of acoustical material to be used shall be included.

SD-18 Statements

Attachments; FIO.

Prior to welding operations, copies of qualified procedures and lists of names and identification symbols of qualified welders and welding operators.

1.3 DELIVERY, STORAGE, AND HANDLING

Deck units shall be delivered to the site in a dry and undamaged condition, stored off the ground with one end elevated, and stored under a weathertight covering permitting good air circulation. Finish of deck units shall be maintained at all times by using touch-up paint whenever necessary to prevent the formation of rust.

PART 2 PRODUCTS

2.1 DECK UNITS

Deck units shall conform to SDI Pub No 28. Panels of maximum possible lengths shall be used to minimize end laps. Fabricate deck units in lengths to span 3 or more supports with flush, telescoped, or nested 2 inch laps at ends, and interlocking, or nested side laps, unless otherwise indicated. Deck with cross-sectional configuration differing from the units indicated may be used, provided that the properties of the proposed units, determined in accordance with AISI SG-673, are equal to or greater than the properties of the units indicated and that the material will fit the space provided without requiring revisions to adjacent materials or systems.

2.1.1 Roof Deck

Steel deck used in conjunction with insulation and built-up roofing shall conform to ASTM A 446, ASTM A 611 or ASTM A 792. Roof deck units shall be fabricated of the steel design thickness required by the design drawings and shall be zinc-coated in conformance with ASTM A 525, G90 coating class or aluminum-zinc coated in accordance with ASTM A 792 Coating Designation AZ55.

2.1.2 Acoustical Deck Units

Deck shall have a noise reduction coefficient of 0.90 when measured in accordance with ASTM C 423 using ASTM E 795 Mounting Type F-25. Sound absorbing materials shall be either glass fiber in roll or premolded form for acoustical steel deck (noncellular) and or glass fiber rigid strip for acoustical steel deck (cellular) in accordance with manufacturer's standards.

2.1.3 Sump Pans

Sump pans shall be provided for roof drains and shall be minimum 0.0747 inch thick steel, flat type. Sump pans shall be shaped to meet roof slope by the supplier or by a sheet metal specialist. Bearing flanges of sump pans shall overlap steel deck a minimum of 3 inches. Opening in bottom of pan shall be shaped, sized, and reinforced to receive roof drain.

2.2 TOUCH-UP PAINT

Touch-up paint for shop-painted units shall be of the same type used for the shop painting, and touch-up paint for zinc-coated units shall be an approved galvanizing repair paint with a high-zinc dust content. Welds shall be touched-up with paint conforming to SSPC Paint 20 in accordance with ASTM A 780. Finish of deck units and accessories shall be maintained by using touch-up paint whenever necessary to prevent the formation of rust.

2.3 ADJUSTING PLATES

Adjusting plates or segments of deck units shall be provided in locations too narrow to accommodate full-size units. As far as practical, the plates shall be the same thickness and configuration as the deck units.

2.4 CLOSURE PLATES

2.4.1 Closure Plates for Roof Deck

Voids above interior walls shall be closed with sheet metal where shown. Open deck cells at parapets, end walls, eaves, and openings through roofs shall be closed with sheet metal. Sheet metal shall be same thickness as deck units.

2.4.1.1 Cover Plates to Close Panels

Cover plates to close panel edge and end conditions and where panels change direction or abut. Butt joints in composite steel deck may receive a tape joint cover.

2.4.1.2 Column Closures to Close Openings

Column closures to close openings between steel deck and structural steel columns.

2.4.1.3 Sheet Metal

Where deck is cut for passage of pipes, ducts, columns, etc., and deck is to remain exposed, provide a neatly cut sheet metal collar to cover edges of deck. Do not cut deck until after installation of supplemental supports.

2.5 ACCESSORIES

The manufacturer's standard accessories shall be furnished as necessary to complete the deck installation. Metal accessories shall be of the same material as the deck and have minimum design thickness as follows: saddles, 0.0474 inch; welding washers, 0.0598 inch; cant strip, 0.0295 inch; other metal accessories, 0.0358 inch; unless otherwise indicated. Accessories shall include but not be limited to saddles, welding washers, cant strips, butt cover plates, underlapping sleeves, and ridge and valley plates.

PART 3 EXECUTION

3.1 ERECTION

Erection of deck and accessories shall be in accordance with SDI Pub No 28 and the approved detail drawings. Damaged deck and accessories including material which is permanently stained or contaminated, with burned holes or deformed shall not be installed. The deck units shall be placed on secure supports, properly adjusted, and aligned at right angles to supports before being permanently secured in place. The deck shall not be used for storage or as a working platform until the units have been secured in position. Loads shall be distributed by appropriate means to prevent damage during construction and to the completed assembly. The maximum uniform distributed storage load shall not exceed the design live load. There shall be no loads suspended directly from the steel deck. Acoustical material shall be neatly fitted into the rib voids.

3.2 ATTACHMENTS

All fasteners shall be installed in accordance with the manufacturer's recommended procedure, except as otherwise specified. The deck units shall be welded with nominal 5/8 inch diameter puddle welds or fastened with screws, powder-actuated fasteners or pneumatically driven fasteners to supports as indicated on the design drawings and in accordance with requirements of SDI Pub No 28. All welding of steel deck shall be in accordance with AWS D1.3 using methods and electrodes as recommended by the manufacturer of the steel deck being used. Welds shall be made only by operators previously qualified by tests prescribed in AWS D1.3 to perform the type of work required. Welding washers shall not be used at the connections of the deck to supports. Welding washers shall not be used at sidelaps. Holes and similar defects will not be acceptable. Deck ends shall be lapped 2 inches. All partial or segments of deck units shall be attached to structural supports in accordance with Section 2.5 of SDI-02. Powder-actuated fasteners shall be driven with a low-velocity piston tool by an operator authorized by the manufacturer of the piston tool. Pneumatically driven fasteners shall be driven with a low-velocity fastening tool and shall comply with the manufacturer's recommendations.

3.3 HOLES AND OPENINGS

All holes and openings required shall be coordinated with the drawings, specifications, and other trades. Holes and openings shall be drilled or cut, reinforced and framed as indicated on the drawings or described in the specifications and as required for rigidity and load capacity. Holes and openings less than 6 inches across require no reinforcement. Holes and openings 6 to 12 inches across shall be reinforced by 0.0474 inch thick steel sheet at least 12 inches wider and longer than the opening and be fastened to the steel deck at each corner of the sheet and at a maximum of 6 inches on center. Holes and openings larger than 12 inches shall be reinforced by steel angles installed perpendicular to the steel joists and supported by the adjacent steel joists. Steel angles shall be installed perpendicular to the deck ribs and shall be fastened to the angles perpendicular to the steel joists. Openings must not interfere with seismic members such as chords and drag struts.

-- End of Section --

SECTION TABLE OF CONTENTS

DIVISION 05 - METALS

SECTION 05400

COLD-FORMED METAL FRAMING

06/96

PART 1 GENERAL

1.1 REFERENCES
1.2 SUBMITTALS
1.3 DELIVERY, STORAGE, AND HANDLING
1.4 LOAD-BEARING COLD-FORMED METAL FRAMING
1.5 MAXIMUM DEFLECTION

PART 2 PRODUCTS

2.1 STUDS
2.1.1 Studs of 1.5 m 16 Gage (0.0598 Inch) and Heavier
2.1.2 Studs of 1.2 mm 18 Gage (0.0478 Inch) and Lighter
2.1.3 Sizes, Gages, Section Modulus, and Other Structural Properties
2.2 PLASTIC GROMMETS

PART 3 EXECUTION

3.1 FASTENING
3.2 TRACKS
3.3 STUDS
3.4 ERECTION TOLERANCES

-- End of Section Table of Contents --

SECTION 05400

COLD-FORMED METAL FRAMING
06/96

PART 1 GENERAL

1.1 REFERENCES

The publications listed below form a part of this specification to the extent referenced. The publications are referred to in the text by the basic designation only.

AMERICAN IRON AND STEEL INSTITUTE (AISI)

AISI SG-673	(1986; Errata 1990) Cold-Formed Steel Design Manual

AMERICAN SOCIETY FOR TESTING AND MATERIALS (ASTM)

ASTM A 653/A 653M	(1995) Steel Sheet, Zinc-Coated (Galvanized) or Zinc-Iron Alloy-Coated (Galvannealed) by the Hot-Dip Process

AMERICAN WELDING SOCIETY, INC. (AWS)

AWS D1.3	(1989) Structural Welding Code - Sheet Steel

1.2 SUBMITTALS

Government approval is required for submittals with a "GA" designation; submittals having an "FIO" designation are for information only. The following shall be submitted in accordance with Section 01300 SUBMITTAL PROCEDURES:

SD-01, Data

Studs and joists; FIO. Metal framing calculations; FIO.

Submit metal framing calculations to verify sizes, gages, and spacing of members and connections. Show methods and practices used in installation.

SD-04 Drawings

Framing drawings; FIO.

Submit framing drawings to show sizes, thicknesses, layout, material designations, methods of installation, and accessories.

1.3 DELIVERY, STORAGE, AND HANDLING

Deliver materials to job site and store in adequately ventilated, dry locations. Storage area shall permit easy access for inspection and handling. If necessary to store materials outside, stack off the ground, support on a level platform, and protect from the weather as approved. Handle materials to prevent damage. Replace damaged items with new, as

directed by the Contracting Officer.

1.4 LOAD-BEARING COLD-FORMED METAL FRAMING

Include top and bottom tracks, bracing, fastenings, and other accessories necessary for complete installation. Framing members shall have the structural properties indicated. Where physical structural properties are not indicated, they shall be as necessary to withstand all imposed loads. Design framing in accordance with AISI SG-673. Metal suspension systems for acoustical ceilings are specified in Section 09510, "Acoustical Ceilings."

1.5 MAXIMUM DEFLECTION

a. Exterior Studs:

Deflection Criteria	Exterior Finish
L/240 or L/360	Synthetic Plaster, Metal Panels
L/360	Cement Plaster, Wood Veneer
L/600	Brick Veneer, Stone Panels

Wall deflections shall be computed on the basis that studs withstand all lateral forces independent of any composite action from sheathing materials. Studs abutting windows or louvers shall also be designed not to exceed 1/4 inch maximum deflection.

PART 2 PRODUCTS

2.1 STUDS

2.1.1 Studs of 16 Gage (0.0598 Inch) and Heavier

Galvanized steel, ASTM A 653/A 653M, SQ Grade 50, G60.

2.1.2 Studs of 18 Gage (0.0478 Inch) and Lighter

Studs of 18 Gage (0.0478 Inch) and Lighter, Track, and Accessories (All Gages): Galvanized steel, ASTM A 653/A 653M, SQ, Grade 50 33 psi G60.

2.1.3 Sizes, Gages, Section Modulus, and Other Structural Properties

Studs shall be stamped with manufacturer's name, initials, or logo, an ICBO number, material thickness and yield strength. Size and gage as indicated.

2.2 PLASTIC GROMMETS

Supply plastic grommets, recommended by stud manufacturer, to protect electrical wires. Prevent metal to metal contact for plumbing pipes.

PART 3 EXECUTION

3.1 FASTENING

Fasten framing members together by welding or by using self-drilling or self-tapping screws. Welding shall conform to AWS D1.3 welding procedure. Electrodes and screw connections shall be as required and indicated in the design calculations. Do not field weld materials lighter than 18 gage.

3.2 TRACKS

Provide accurately aligned runners at top and bottom of partitions. Anchor tracks as indicated in design calculations. Butt weld joints in tracks or splice with stud inserts. Fasteners shall be at least 3 inches from the edge of concrete slabs.

3.3 STUDS

Cut studs square and set with firm bearing against webs of top and bottom tracks. Position studs vertically in tracks and space as indicated in design. Do not splice studs. Provide at least two studs at jambs of doors and other openings 2 feet wide or larger. Provide jack studs over openings, as necessary, to maintain indicated stud spacing. Provide tripled studs at corners, positioned to receive interior and exterior finishes. Fasten studs to top and bottom tracks by welding or screwing both flanges to the tracks. In curtain wall construction, provide for vertical movement where studs connect to the structural frame. Provide horizontal bracing in accordance with the design calculations and AISI SG-673, consisting of, as a minimum, runner channel cut to fit between and welded to the studs or hot- or cold-rolled steel channels inserted through cutouts in web of each stud and secured to studs with welded clip angles. Bracing shall be not less than the following:

LOAD	HEIGHT	BRACING
Wind load only	Up to 10 feet	One row at mid-height
	Over 10 feet	Rows 5'-0" o.c. maximum
Axial load	Up to 10 feet	Two rows at 1/3 points
	Over 10 feet	Rows 3'-4" o.c. maximum

3.4 ERECTION TOLERANCES

a. Framing members which will be covered by finishes such as wallboard, plaster, or ceramic tile set in a mortar setting bed, shall be within the following limits:

(1) Layout of walls and partitions: 1/4 inch from intended position;

(2) Plates and runners: 1/4 inch in 8 feet from a straight line;

(3) Studs: 1/4 inch in 8 feet out of plumb, not cumulative; and

(4) Face of framing members: 1/4 inch in 8 feet from a true plane.

-- End of Section --

SECTION TABLE OF CONTENTS

DIVISION 05 - METALS

SECTION 05500

MISCELLANEOUS METAL

08/94

PART 1 GENERAL

1.1 REFERENCES
1.2 SUBMITTALS
1.3 GENERAL REQUIREMENTS
1.4 DISSIMILAR MATERIALS
1.5 WORKMANSHIP
1.6 ANCHORAGE

PART 2 PRODUCTS

2.1 ALUMINUM FINISHES
2.2 SHOP PAINTING
2.3 ACCESS DOORS AND PANELS
2.4 EXPANSION JOINT COVERS
2.5 FLOOR PLATES
2.6 LADDERS
2.7 MISCELLANEOUS
2.8 ROOF SCUTTLES

PART 3 EXECUTION

3.1 GENERAL REQUIREMENTS
3.2 REMOVABLE ACCESS PANELS

-- End of Section Table of Contents --

SECTION 05500

MISCELLANEOUS METAL
08/94

PART 1 GENERAL

1.1 REFERENCES

The publications listed below form a part of this specification to the extent referenced. The publications are referred to in the text by basic designation only.

AMERICAN NATIONAL STANDARDS INSTITUTE (ANSI)

ANSI A14.3	(1992) Ladders - Fixed - Safety Requirements

AMERICAN SOCIETY FOR TESTING AND MATERIALS (ASTM)

ASTM A 123	(1989a) Zinc (Hot-Dip Galvanized) Coatings on Iron and Steel Products
ASTM A 446	(1993) Steel Sheet, Zinc-Coated (Galvanized) by the Hot-Dip Process, Structural (Physical) Quality
ASTM A 525	(1993) General Requirements for Steel Sheet, Zinc-Coated (Galvanized) by the Hot-Dip Process

AMERICAN WELDING SOCIETY (AWS)

AWS D1.1	(1994) Structural Welding Code - Steel

1.2 SUBMITTALS

Government approval is required for submittals with a "GA" designation; submittals having an "FIO" designation are for information only. The following shall be submitted in accordance with Section 01300 SUBMITTAL PROCEDURES:

SD-04 Drawings

Miscellaneous Metal Items; FIO.

Detail drawings indicating material thickness, type, grade, and class; dimensions; and construction details. Drawings shall include catalog cuts, erection details, manufacturer's descriptive data and installation instructions, and templates. Detail drawings for the following items: ladders, and roof scuttle.

SD-14 Samples

Miscellaneous Metal Items; FIO.

Samples of the following items: Expansion joint covers. Samples shall be full size, taken from manufacturer's stock, and shall be complete as required for installation in the structure. Samples may be installed in the work, provided each sample is clearly identified and its location recorded.

1.3 GENERAL REQUIREMENTS

The Contractor shall verify all measurements and shall take all field measurements necessary before fabrication. Welding to or on structural steel shall be in accordance with AWS D1.1. Items specified to be galvanized, when practicable and not indicated otherwise, shall be hot-dip galvanized after fabrication. Galvanizing shall be in accordance with ASTM A 123, ASTM A 446, or ASTM A 525, as applicable. Exposed fastenings shall be compatible materials, shall generally match in color and finish, and shall harmonize with the material to which fastenings are applied. Materials and parts necessary to complete each item, even though such work is not definitely shown or specified, shall be included. Poor matching of holes for fasteners shall be cause for rejection. Fastenings shall be concealed where practicable. Thickness of metal and details of assembly and supports shall provide strength and stiffness. Joints exposed to the weather shall be formed to exclude water.

1.4 DISSIMILAR MATERIALS

Where dissimilar metals are in contact, or where aluminum is in contact with concrete, mortar, masonry, wet or pressure-treated wood, or absorptive materials subject to wetting, the surfaces shall be protected with a coat of bituminous paint or asphalt varnish.

1.5 WORKMANSHIP

Miscellaneous metalwork shall be well formed to shape and size, with sharp lines and angles and true curves. Drilling and punching shall produce clean true lines and surfaces. Welding shall be continuous along the entire area of contact except where tack welding is permitted. Exposed connections of work in place shall not be tack welded. Exposed welds shall be ground smooth. Exposed surfaces of work in place shall have a smooth finish, and unless otherwise approved, exposed riveting shall be flush. Where tight fits are required, joints shall be milled. Corner joints shall be coped or mitered, well formed, and in true alignment. Work shall be accurately set to established lines and elevations and securely fastened in place. Installation shall be in accordance with manufacturer's installation instructions and approved drawings, cuts, and details.

1.6 ANCHORAGE

Anchorage shall be provided where necessary for fastening miscellaneous metal items securely in place. Anchorage not otherwise specified or indicated shall include slotted inserts made to engage with the anchors, expansion shields, and power-driven fasteners when approved for concrete; toggle bolts and through bolts for masonry; machine and carriage bolts for steel; and lag bolts and screws for wood.

PART 2 PRODUCTS

2.1 ALUMINUM FINISHES

Unless otherwise specified, aluminum items shall have standard mill finish.

2.2 SHOP PAINTING

Surfaces of ferrous metal except galvanized surfaces, shall be cleaned and shop coated with the manufacturer's standard protective coating unless otherwise specified. Surfaces of items to be embedded in concrete shall not be painted. Items to be finish painted shall be prepared according to manufacturer's recommendations or as specified.

2.3 ACCESS DOORS AND PANELS

Doors and panels shall be flush type unless otherwise indicated. Frames for access doors shall be fabricated of not lighter than 16 gauge steel with welded joints and finished with anchorage for securing into construction. Access doors shall be a minimum of 14 by 20 inches and of not lighter than 14 gauge steel, with stiffened edges, complete with attachments. Access doors shall be hinged to frame and provided with a flush face, screw driver operated latch. Exposed metal surfaces shall have a shop applied prime coat.

2.4 EXPANSION JOINT COVERS

Expansion joint covers shall be constructed of extruded aluminum with anodized satin finish for walls and ceilings and with standard mill finish for floor covers and exterior covers. Plates, backup angles, expansion filler strip and anchors shall be designed as indicated. Expansion joint system shall provide a fire rating as indicated on the Drawings, if required.

2.5 FLOOR PLATES

Floor plates shall be 1/4 inch thick, raised thread steel. Plates located on the exterior shall be galvanized. Frames shall be of welded steel construction finished to match the grating.

2.6 LADDERS

Ladders shall be steel fixed rail type in accordance with ANSI A14.3.

2.7 MISCELLANEOUS

Miscellaneous plates and shapes for items that do not form a part of the structural steel framework, such as lintels, sill angles, miscellaneous mountings, and frames, shall be provided to complete the work.

2.8 ROOF SCUTTLES

Roof scuttles shall be of galvanized steel not less than 14 gauge, with 3 inch beaded flange welded and ground at corners. Scuttle shall be sized to provide minimum clear opening of 37 by 30 inches. Cover and curb shall be insulated with 1 inch thick rigid insulation covered and protected by galvanized steel liner not less than 26 gauge. The curb shall be equipped with an integral metal cap flashing of the same gauge and metal as the curb, full welded and ground at corners for weathertightness. Scuttle shall be completely assembled with heavy hinges, compression spring operators enclosed in telescopic tubes, positive snap latch with turn handles on inside and outside and neoprene draft seal. Fasteners shall be provided for padlocking on the inside. The cover shall be equipped with an automatic hold-open arm complete with handle to permit one hand release.

PART 3 EXECUTION

3.1 GENERAL REQUIREMENTS

All items shall be installed at the locations shown and according to the manufacturer's recommendations. Items listed below require additional procedures as specified.

3.2 REMOVABLE ACCESS PANELS

Install removable access doors and panel not less than 12 by 12 inches directly below each valve, flow indicator, damper, or air splitter that is located above the ceiling, other than an acoustical ceiling, and that would otherwise not be accessible. All other access panels shall be installed at locations shown on drawings.

-- End of Section --

SECTION TABLE OF CONTENTS

DIVISION 06 - WOODS & PLASTICS

SECTION 06100

ROUGH CARPENTRY

12/93

PART 1 GENERAL

1.1 REFERENCES
1.2 SUBMITTALS
1.3 DELIVERY AND STORAGE

PART 2 PRODUCTS

2.1 LUMBER AND SHEATHING
2.1.1 Grading and Marking
2.1.1.1 Lumber Products
2.1.1.2 Plywood and Sheathing Products
2.1.2 Sizes
2.1.3 Moisture Content
2.1.4 Treatment
2.1.4.1 Lumber
2.1.4.2 Plywood
2.1.5 Fire-Retardant Treatment
2.1.6 Miscellaneous Wood Members
2.1.6.1 Nonstress Graded Members
2.1.6.2 Blocking
2.2 ACCESSORIES AND NAILS
2.2.1 Anchor Bolts
2.2.2 Bolts: Lag, Toggle, and Miscellaneous Bolts and Screws
2.2.3 Clip Angles
2.2.4 Expansion Shields
2.2.5 Nails and Staples

PART 3 EXECUTION

3.1 INSTALLATION OF FRAMING
3.2 INSTALLATION OF MISCELLANEOUS WOOD MEMBERS
3.2.1 Blocking
3.2.2 Nailers and Nailing Strips
3.2.3 Furring Strips

-- End of Section Table of Contents --

SECTION 06100

ROUGH CARPENTRY
12/93

PART 1 GENERAL

1.1 REFERENCES

The publications listed below form a part of this specification to the extent referenced. The publications are referred to in the text by basic designation only.

AMERICAN FOREST AND PAPER ASSOCIATION (AFPA)

AFPA-T901 National Design Specification for Wood Construction	(1991; Supple 1993; Addenda April 1995)
AFPA T11-WCD1	(1988) Manual for Wood Frame Construction

AMERICAN INSTITUTE OF TIMBER CONSTRUCTION (AITC)

AITC 111	(1979) Recommended Practice for Protection of Structural Glued Laminated Timber During Transit, Storage and Erection

AMERICAN SOCIETY FOR TESTING AND MATERIALS (ASTM)

ASTM A 307	(1994) Carbon Steel Bolts and Studs, 60 000 PSI Tensile Strength
ASTM D 2898	(1981; R 1986) Accelerated Weathering of Fire-Retardant-Treated Wood for Fire Testing

AMERICAN WOOD PRESERVERS' ASSOCIATION (AWPA)

AWPA C2	(1993) Lumber, Timber, Bridge Ties and Mine Ties - Preservative Treatment by Pressure Processes
AWPA C9	(1993) Plywood - Preservative Treatment by Pressure Processes
AWPA C20	(1993) Structural Lumber - Fire-Retardant Treatment by Pressure Processes
AWPA C27	(1993) Plywood - Fire-Retardant Treatment by Pressure Processes
AWPA P5	(1993) Standards for Waterborne Preservatives

CALIFORNIA REDWOOD ASSOCIATION (CRA)

CRA-RIS-01-SS	(1995) Standard Specifications for Grades

of California Redwood Lumber

FEDERAL SPECIFICATIONS (FS)

FS FF-N-105	(Rev B; Am 3; Int Am 4; Notice 1) Nails, Brads, Staples and Spikes: Wire, Cut and Wrought

NATIONAL HARDWOOD LUMBER ASSOCIATION (NHLA)

NHLA-01	(1994) Rules for the Measurement & Inspection of Hardwood & Cypress

NORTHEASTERN LUMBER MANUFACTURERS ASSOCIATION (NELMA)

NELMA-01	(1993) Standard Grading Rules for Northeastern Lumber

SOUTHERN CYPRESS MANUFACTURERS ASSOCIATION (SCMA)

SCMA-01	(1986; Supple No. 1, Aug 1993) Standard Specifications for Grades of Southern Cypress

SOUTHERN PINE INSPECTION BUREAU (SPIB)

SPIB-1001	(1994) Standard Grading Rules for Southern Pine Lumber

WEST COAST LUMBER INSPECTION BUREAU (WCLIB)

WCLIB Std 17	(1993) Grading Rules for West Coast Lumber

WESTERN WOOD PRODUCTS ASSOCIATION (WWPA)

WWPA-01	(1991; Supple No. 3) Western Lumber Grading Rules 91

1.2 SUBMITTALS

Government approval is required for submittals with a "GA" designation; submittals having an "FIO" designation are for information only. The following shall be submitted in accordance with Section 01300 SUBMITTAL PROCEDURES:

SD-13 Certificates

Grading and Marking; FIO.

Manufacturer's certificates (audited by an American Lumber Standards approved agency) attesting that lumber and material not normally grade marked or exempt from being grade marked meet the specified requirements. Certificate of Inspection issued for grade marked material by an American Lumber Standards Committee (ALSC) recognized lumber inspection agency prior to shipment.

1.3 DELIVERY AND STORAGE

Materials shall be delivered to the site in undamaged condition, stored off

ground in fully covered, well ventilated areas, and protected from extreme changes in temperature and humidity. Laminated timber shall be handled and stored in accordance with AITC 111.

PART 2 PRODUCTS

2.1 LUMBER AND SHEATHING

2.1.1 Grading and Marking

2.1.1.1 Lumber Products

Solid sawn and finger-jointed lumber shall bear an authorized gradestamp or grademark recongnized by ALSC, or an ALSC recognized certification stamp, mark, or hammerbrand. Surfaces that are to be exposed to view shall not bear grademarks, stamps, or any type of identifying mark. Hammer marking will be permitted on timbers when all surfaces will be exposed to view.

2.1.1.2 Plywood and Sheathing Products

Materials shall bear the grademark, stamp or other identifying marks indicating grades of material and rules or standards under which produced. Such identifying marks shall be in accordance with the rule or standard under which the material is produced, including requirements for qualifications and authority of the inspection organization, usage of authorized identification, and information included in the identification. Except for plywood, bundle marking will be permitted in lieu of marking each individual piece. Surfaces that are to be architecturally exposed to view shall not bear grademarks, stamps, or other types of identifying marks.

2.1.2 Sizes

Lumber and material sizes shall conform to requirements of the rules or standards under which produced. Unless otherwise specified, lumber shall be surfaced on four sides. Size references, unless otherwise specified, are nominal sizes, and actual sizes shall be within manufacturing tolerances allowed by the standard under which the product is produced.

2.1.3 Moisture Content

At the time lumber and other materials are delivered and when installed in the work their moisture content shall be as follows:

a. Treated and Untreated Lumber Except Roof Planking:

4 inches or less, nominal thickness, 19 percent maximum. 5 inches or more, nominal thickness, 23 percent maximum in a 3 inch perimeter of the timber cross-section.

b. Materials Other Than Lumber: In accordance with standard under which product is produced.

2.1.4 Treatment

2.1.4.1 Lumber

All lumber shall be treated in accordance with AWPA C2 with waterborne preservatives listed in AWPA P5 to a retention level as follows:

a. 0.25 pcf intended for above ground use.

b. 0.40 pcf intended for ground contact and fresh water use.

2.1.4.2 Plywood

All plywood shall be treated in accordance with AWPA C9 with waterborne preservatives listed in AWPA P5 to a retention level as follows:

a. 0.25 pcf intended for above ground use.

b. 0.40 pcf intended for ground contact and fresh water use.

2.1.5 Fire-Retardant Treatment

Fire-retardant treated wood shall be pressure treated in accordance with AWPA C20 for lumber and AWPA C27 for plywood. Material use shall be defined in AWPA C20 and AWPA C27 for Interior Type A and B and Exterior Type. Treatment and performance inspection shall be by an independent and qualified testing agency that establishes performance ratings. Each piece or bundle of treated material shall bear identification of the testing agency to indicate performance in accordance with such rating. Treated materials to be exposed to rain wetting shall be subjected to an accelerated weathering technique in accordance with ASTM D 2898 prior to being tested for compliance with AWPA C20 or AWPA C27. All wood items shall receive a fire-retardant treatment.

2.1.6 Miscellaneous Wood Members

2.1.6.1 Nonstress Graded Members

Members shall include bridging, corner bracing, furring, grounds, and nailing strips. Members shall be in accordance with TABLE I for the species used. Sizes shall be as follows unless otherwise shown:

Member	Size (inch)
Bridging	1 by 3 or 1 by 4 for use between members 2 by 12 and smaller; 2 by 4 for use between members larger than 2 by 12.
Corner bracing	1 by 4.
Furring	1 by 2 3.
Grounds	Plaster thickness by 1-1/2.
Nailing strips	1 by 3 or 1 by 4 when used as shingle base or interior finish, otherwise 2 inch stock.

2.1.6.2 Blocking

Blocking shall be standard or number 2 grade.

2.2 ACCESSORIES AND NAILS

Markings shall identify both the strength grade and the manufacturer. Accessories and nails shall conform to the following:

2.2.1 Anchor Bolts

ASTM A 307, size as indicated, complete with nuts and washers.

2.2.2 Bolts: Lag, Toggle, and Miscellaneous Bolts and Screws

Type, size, and finish best suited for intended use. Finish options include zinc compounds, cadmium, and aluminum paint impregnated finishes.

2.2.3 Clip Angles

Steel, 3/16 inch thick, size best suited for intended use; or zinc-coated steel or iron commercial clips designed for connecting wood members.

2.2.4 Expansion Shields

Type and size best suited for intended use.

2.2.5 Nails and Staples

FS FF-N-105, size and type best suited for purpose. In general, 8-penny or larger nails shall be used for nailing through 1 inch thick lumber and for toe nailing 2 inch thick lumber; 16-penny or larger nails shall be used for nailing through 2 inch thick lumber. Nails used with treated lumber and sheathing shall be galvanized. Nailing shall be in accordance with the recommended nailing schedule contained in AFPA T11-WCD1. Where detailed nailing requirements are not specified, nail size and spacing shall be sufficient to develop an adequate strength for the connection. The connection's strength shall be verified against the nail capacity tables in AFPA-T901. Reasonable judgement backed by experience shall ensure that the designed connection will not cause the wood to split. If a load situation exceeds a reasonable limit for nails, a specialized connector shall be used.

PART 3 EXECUTION

3.1 INSTALLATION OF FRAMING

3.2 INSTALLATION OF MISCELLANEOUS WOOD MEMBERS

3.2.1 Blocking

Blocking shall be provided as necessary for application of siding, sheathing, subflooring, wallboard, and other materials or building items, and to provide firestopping. Blocking for firestopping shall ensure a maximum dimension of 8 feet for any concealed space. Blocking shall be cut to fit between framing members and rigidly nailed thereto.

3.2.2 Nailers and Nailing Strips

Nailers and nailing strips shall be provided as necessary for the attachment of finish materials. Stacked nailers shall be assembled with spikes or nails spaced not more than 18 inches on center and staggered. Beginning and ending nails shall not be more than 6 inches for nailer end. Ends of stacked nailers shall be offset approximately 12 inches in long

runs and alternated at corners. Anchors shall extend through the entire thickness of the nailer. Strips shall be run in lengths as long as practicable, butt jointed, cut into wood framing members when necessary, and rigidly secured in place.

3.2.3 Furring Strips

Furring strips shall be provided at the locations shown. Furring strips shall be installed at 16 inches on center unless otherwise shown, run in lengths as long as practicable, butt jointed and rigidly secured in place.

TABLE I. SPECIES AND GRADE

Subflooring, Roof Sheathing, Wall Sheathing, Furring

Grading Rules	Species	Const Standard	No. 2 Comm	No. 2 Board Comm	No. 3 Comm
NHLA-01	Cypress			X	
NELMA-01	Northern White Cedar				X
	Eastern White Pine	X			
	Northern Pine	X			
	Balsam Fir				X
	Eastern Hemlock-Tamarack				X
CRA-RIS-01-SS	Redwood	X			
SCMA-01	Cypress			X	
SPIB-1001	Southern Pine	X			
WCLIB Std 17	Douglas Fir-Larch	X			
	Hem-Fir	X			
	Sitka Spruce	X			
	Mountain Hemlock	X			
	Western Cedar	X			
WWPA-01	Douglas Fir-Larch	X			
	Hem-Fir	X			
	Idaho White Pine	X			
	Lodgepole Pine			X	
	Ponderosa Pine			X	
	Sugar Pine			X	
	Englemann Spruce			X	
	Douglas Fir South			X	
	Mountain Hemlock			X	
	Subalpine Fir			X	
	Western Cedar			X	

TABLE II. SPECIES AND GRADE

Not Used.

-- End of Section --

SECTION TABLE OF CONTENTS

DIVISION 06 - WOODS & PLASTICS

SECTION 06200

FINISH CARPENTRY

12/93

PART 1 GENERAL

1.1 REFERENCES
1.2 SUBMITTALS
1.3 DELIVERY AND STORAGE

PART 2 PRODUCTS

2.1 WOOD ITEMS, AND TRIM
2.1.1 Grading and Marking
2.1.2 Sizes and Patterns
2.1.3 Moisture Content
2.1.4 Molding and Trim
2.1.4.1 Wood
2.1.5 Treatment
2.1.5.1 Lumber
2.1.5.2 Plywood
2.1.6 Fire-Retardant Treatment
2.2 NAILS

PART 3 EXECUTION

3.1 MOLDING AND INTERIOR TRIM

-- End of Section Table of Contents --

SECTION 06200

FINISH CARPENTRY
12/93

PART 1 GENERAL

1.1 REFERENCES

The publications listed below form a part of this specification to the extent referenced. The publications are referred to in the text by basic designation only.

AMERICAN SOCIETY FOR TESTING AND MATERIALS (ASTM)

ASTM D 2898	(1994) Accelerated Weathering of Fire-Retardant-Treated Wood for Fire Testing

AMERICAN WOOD-PRESERVERS' ASSOCIATION (AWPA)

AWPA C9	(1993) Plywood - Preservative Treatment by Pressure Processes
AWPA C20	(1993) Structural Lumber - Fire-Retardant Treatment by Pressure Processes
AWPA C27	(1993) Plywood - Fire-Retardant Treatment by Pressure Processes
AWPA P5	(1993) Standards for Waterborne Preservatives

FEDERAL SPECIFICATIONS (FS)

FS FF-N-105	(Rev B; Am 3; Int Am 4; Notice 1) Nails, Brads, Staples and Spikes: Wire, Cut and Wrought

1.2 SUBMITTALS

Government approval is required for submittals with a "GA" designation; submittals having an "FIO" designation are for information only. The following shall be submitted in accordance with Section 01300 SUBMITTAL PROCEDURES:

SD-04 Drawings

Finish Carpentry; FIO.

Drawings showing fabricated items and special mill and woodwork items. Drawings shall indicate materials and details of construction, methods of fastening, erection, and installation.

1.3 DELIVERY AND STORAGE

Materials shall be delivered to the site in undamaged condition, stored off ground in fully covered, well-ventilated areas, and protected from extreme changes in temperature and humidity.

PART 2 PRODUCTS

2.1 WOOD ITEMS, AND TRIM

2.1.1 Grading and Marking

Materials shall bear the grademark, stamp or other identifying marks indicating grades of material and rules or standards under which produced. Such identifying marks on a material shall be in accordance with the rule or standard under which the material is produced, including requirements for qualifications and authority of the inspection organization, usage of authorized identification, and information included in the identification. The inspection agency for lumber shall be certified by the Board of Review, American Lumber Standards Committee, to grade the species used. Except for plywood and lumber, bundle marking will be permitted in lieu of marking each individual piece. Surfaces that are to be architecturally exposed to view shall not bear grademarks, stamps, or other types of identifying marks.

2.1.2 Sizes and Patterns

Lumber sizes and patterns shall conform to rules or standards under which produced. Unless otherwise specified, lumber shall be surfaced on four sides. Sizes and patterns for materials other than lumber shall conform to requirements of the rules or standards under which produced. Size references, unless otherwise specified, are nominal sizes, and actual sizes shall be within manufacturing tolerances allowed by the standard under which the product is produced.

2.1.3 Moisture Content

The maximum moisture content of untreated trim and wood siding shall be 15 percent at the time of delivery to the jobsite and when installed. Moisture content of all other material shall be in accordance with the standard under which the product is produced.

2.1.4 Molding and Trim

2.1.4.1 Wood

Molding and trim shall be finish grade maple as indicated on the Drawings. Sizes and patterns shall be as indicated.

2.1.5 Treatment

2.1.5.1 Lumber

All lumber shall be treated in accordance with AWPA C2 with waterborne preservatives listed in AWPA P5 to a retention level as follows:

a. 0.25 pcf intended for above ground use.

b. 0.40 pcf intended for ground contact and fresh water use.

2.1.5.2 Plywood

All plywood shall be treated in accordance with AWPA C9 with waterborne preservatives listed in AWPA P5 to a retention level as follows:

a. 0.25 pcf intended for above ground use.

b. 0.40 pcf intended for ground contact and fresh water use.

2.1.6 Fire-Retardant Treatment

Fire-retardant treated wood shall be pressure treated in accordance with AWPA C20 for lumber and AWPA C27 for plywood. Material use shall be defined in AWPA C20 and AWPA C27 for Interior Type A and B and Exterior Type. Treatment and performance inspection shall be by an independent and qualified testing agency that establishes performance ratings. Each piece or bundle of treated material shall bear identification of the testing agency to indicate performance in accordance with such rating. Treated materials to be exposed to rain wetting shall be subjected to an accelerated weathering technique in accordance with ASTM D 2898 prior to being tested for compliance with AWPA C20 or AWPA C27. All wood items shall receive a fire-retardant treatment.

2.2 NAILS

Nails shall be the size and type best suited for the purpose and shall conform to FS FF-N-105. Nails shall be hot-dip galvanized or aluminum when used on exterior work.

PART 3 EXECUTION

3.1 MOLDING AND INTERIOR TRIM

Molding and interior trim shall be installed straight, plumb, level and with closely fitted joints. Exposed surfaces shall be machine sanded at the mill. Molded work shall be coped at returns and interior angles and mitered at external corners. Intersections of flatwork shall be shouldered to ease any inherent changes in plane. Window and door trim shall be provided in single lengths. Blind nailing shall be used to the extent practicable, and face nailing shall be set and stopped with a nonstaining putty to match the finish applied. Screws shall be used for attachment to metal; setting and stopping of screws shall be of the same quality as required where nails are used.

-- End of Section --

SECTION TABLE OF CONTENTS

DIVISION 06 - WOODS & PLASTICS

SECTION 06410

PLASTIC LAMINATED FACED CABINETS AND ACCESSORIES

12/93

PART 1 GENERAL

1.1 REFERENCES
1.2 GENERAL
1.3 SUBMITTALS

PART 2 PRODUCTS

2.1 CONSTRUCTION
2.1.1 Finish
2.2 HARDWARE
2.2.1 Cabinet Hardware
2.3 MATERIALS
2.3.1 Softwood Lumber
2.3.2 Panel Materials
2.3.2.1 Softwood Plywood
2.3.2.2 Wood Particleboard
2.3.3 Plastic Laminates
2.3.4 Backer/Liner Sheets
2.4 FABRICATION
2.4.1 Shop Assembly
2.4.2 Doors and Exposed Edges
2.4.3 Plastic Laminate Finish Edges
2.4.4 Door and Drawer Fronts
2.4.5 Site Fitting
2.4.6 Plastic Laminate
2.4.7 Laminate Backing/Liner Sheet
2.4.8 Plumbing Fixture Cutouts

PART 3 EXECUTION

3.1 EXAMINATION
3.1.1 Backing and Support Framing
3.1.2 Rough-In Framing
3.2 INSTALLATION
3.2.1 Setting of Cabinets
3.2.2 Fixture Attachments
3.2.3 Joint Fasteners
3.2.4 Scribing of Cabinets Abutting Other Componets
3.2.5 Cabinet and Counter Bases
3.2.6 Anchorage Devices
3.3 ADJUSTING
3.4 CLEANING

-- End of Section Table of Contents --

SECTION 06410

PLASTIC LAMINATED FACED CABINETS AND ACCESSORIES
12/93

PART 1 GENERAL

1.1 REFERENCES

The publications listed below form a part of this specification to the extent referenced. The publications are referred to in the text by basic designation only.

FEDERAL SPECIFICATION (FED. SPEC.)

FS MMM-A-130B (Rev B, Int. Am. 3) Adhesive, Contact

NATIONAL ELECTRICAL MANUFACTURERS ASSOCIATION (NEMA) STANDARD

NEMA LD 3 (1991) High-Pressure Decorative Laminates

AMERICAN NATIONAL STANDARDS INSTITUTE (ANSI)

ANSI A208.1 Mat Formed Wood Particleboard

BUILDERS HARDWARE MANUFACTURERS ASSOCIATION (BHMA)

BHMA A156.9 (1988) Cabinet Hardware

1.2 GENERAL

Cabinets shall be Architectural Cabinets, Laminated Clad-Custom Premium grade constructed in conformance with Section 400B of the AWI Architectural Woodwork Quality Standards and with the details shown on the drawings. Construction shall be of the flush overlay type. Shelves shall be adjustable type. Exposed surface of cabinet work shall be laminate covered. Use GP50 (HPDL) laminated on all exterior surfaces, back of doors and shelves. Low pressure melamine on interiors (LPDL) and inside of drawers. Counters shall be provided with watertight sink rim. Cabinets shall be of the indicated configuration. Drawers shall be removable and shall be equipped with position stops to avoid accidental complete withdrawals.

1.3 SUBMITTALS

Government approval is required for submittals with a "GA" designation; submittals having an "FIO" designation are for information only. The following shall be submitted in accordance with Section 01300 SUBMITTALS:

SD-01 Data

Catalog Data; FIO.

Provide catalog sheet on plastic laminate and cabinet hardware.

SD-04 Drawing

Drawings; FIO.

Drawings showing fabrication details and construction.

SD-13 Certificates

Certificates; FIO.

Certificates shall certify that cabinets are constructed in conformance with AWI Standards.

SD-14 Samples

Plastic Laminates; FIO.

Samples of sufficient size to show color range, pattern, type and joints.

PART 2 PRODUCTS

2.1 CONSTRUCTION

2.1.1 Finish

Plastic Laminate Sheet Countertops Design, color, and finish shall be as indicted on the finish schedule.

2.2 HARDWARE

2.2.1 Cabinet Hardware

BHMA A156.9; hardware shall be as follows:

Cabinet Hardware - 652 Finish

Door Hinges	B01602
Self Closing Door Pull	B02011 (wire type)
Drawer Pull	B02011 (wire type)
Drawer Slides	B05051
Shelf Standard	B04071
Shelf Rest	B04081 Receptionists Swinging Door

1 Set Spring pivots 7012 x 626 Bommer

2.3 MATERIALS

2.3.1 Softwood Lumber

PS 20; graded in accordance with AWI Premium; average moisture content of 8 percent; exposed stiles and rails species birch, paint grade, unless otherwise indicated on the Drawings.

2.3.2 Panel Materials

Countertop and back splash shall be constructed of 3/4-inch exterior grade plywood or 3/4-inch particle board with waterproof glue as indicated on the Drawings. Edging and trim shall consist of plastic laminate cut and fitted to all exposed edges.

2.3.2.1 Softwood Plywood

PS 1, exterior; graded in accordance with AWI, core materials of veneer core.

2.3.2.2 Wood Particleboard

ANSI A208.1; standard, composed of wood chips, medium density, made with water resistant adhesive; of grade to suit application; sanded faces.

2.3.3 Plastic Laminates

Plastic laminate shall conform to NEMA LD 3. Adhesive shall conform to FS MMM-A-130B, Type I. Continuous sheets of longest lengths practicable shall be provided. Joints in surface sheeting shall be tight and flush and held to a practicable minimum. When the countertop and back splash are two separate units, GP50 plastic laminate shall be used. When the countertop and back splash are one unit, PF42 plastic laminate shall be used.

2.3.4 Backer/Liner Sheets

Backer/Liner sheets of high pressure plastic laminate Grade BK20 shall be applied to the reverse side of all core material.

2.4 FABRICATION

2.4.1 Shop Assembly

Shop assemble cabinets for delivery to site in units easily handled and to permit passage through building openings.

2.4.2 Doors and Exposed Edges

Fit shelves, doors, and exposed edges with plastic edging. Use one piece for full length only.

2.4.3 Plastic Laminate Finish Edges

Cap exposed plastic laminate finish edges with plastic trim.

2.4.4 Door and Drawer Fronts

3/4 inch thick; reveal overlay style.

2.4.5 Site Fitting

When necessary to cut and fit on site, provide materials with ample allowance for cutting. Provide trim for scribing and site cutting.

2.4.6 Plastic Laminate

Apply plastic laminate finish in full uninterrupted sheets consistent with manufactured sizes. Fit corners and joints hairline; secure with concealed fasteners. Locate counter butt joints minimum 2 feet from sink cut-outs.

2.4.7 Laminate Backing/Liner Sheet

Apply laminate backing/liner sheet to reverse side of plastic laminate finished surfaces.

2.4.8 Plumbing Fixture Cutouts

Provide cutouts for plumbing fixtures, inserts, and fixtures and fittings as indicated on the Drawings. Verify locations of cutouts from on-site

dimensions. Seal cut edges.

PART 3 EXECUTION

3.1 EXAMINATION

3.1.1 Backing and Support Framing

Verify adequacy of backing and support framing.

3.1.2 Rough-In Framing

Verify location and sizes of utility rough-in associated with work of this section.

3.2 INSTALLATION

3.2.1 Setting of Cabinets

Set and secure cabinets in place; rigid, plumb, and level.

3.2.2 Fixture Attachments

Use fixture attachments in concealed locations for wall mounted components.

3.2.3 Joint Fasteners

Use concealed joint fasteners to align and secure adjoining cabinet units and counter tops.

3.2.4 Scribing of Cabinets Abutting Other Componets

Carefully scribe cabinets abutting other components, with maximum gaps of 1/32 inch. Do not use additional overlay trim for this purpose.

3.2.5 Cabinet and Counter Bases

Secure cabinet and counter bases to floor using appropriate angles and anchorages.

3.2.6 Anchorage Devices

Countersink anchorage devices at exposed locations. Conceal with solid wood plugs of species to match surrounding wood or other type of plug to match laminate; finish flush with surrounding surfaces.

3.3 ADJUSTING

Adjust moving or operating parts to function smoothly and correctly.

3.4 CLEANING

Clean cabinets, counters, shelves, hardware, fittings, and fixtures.

-- End of Section --

SECTION TABLE OF CONTENTS

DIVISION 07 - THERMAL & MOISTURE PROTECTION

SECTION 07160

BITUMINOUS DAMPPROOFING

12/93

PART 1 GENERAL

1.1 REFERENCES
1.2 SUBMITTALS
1.3 QUALIFICATIONS
1.4 DELIVERY, STORAGE AND HANDLING

PART 2 PRODUCTS

2.1 EMULSION-BASED ASPHALT DAMPPROOFING
2.1.1 Fibrated Emulsion-Based Asphalt

PART 3 EXECUTION

3.1 SURFACE PREPARATION
3.1.1 Protection of Surrounding Areas
3.1.2 Masonry Surfaces
3.2 APPLICATION OF BITUMINOUS DAMPPROOFING
3.2.1 Emulsion-Based Asphalt
3.3 CLEAN-UP
3.4 PROTECTION

-- End of Section Table of Contents --

SECTION 07160

BITUMINOUS DAMPPROOFING
12/93

PART 1 GENERAL

1.1 REFERENCES

The publications listed below form a part of this specification to the extent referenced. The publications are referred to in the text by basic designation only.

AMERICAN SOCIETY FOR TESTING AND MATERIALS (ASTM)

ASTM D 1227	(1987) Emulsified Asphalt Used as a Protective Coating for Roofing

1.2 SUBMITTALS

Government approval is required for submittals with a "GA" designation; submittals having an "FIO" designation are for information only. The following shall be submitted in accordance with SECTION 01300 SUBMITTAL PROCEDURES:

SD-13 Certificates

Materials; FIO.

Certificates attesting that the materials meet the requirements specified.

1.3 QUALIFICATIONS

Work shall be performed by skilled laborers thoroughly experienced in the type of bituminous dampproofing work specified to meet the requirements of the contract.

1.4 DELIVERY, STORAGE AND HANDLING

Dampproofing materials shall be delivered to the project site in the original sealed containers bearing the name of manufacturer, contents and brand name, and stored in a weathertight enclosure to prevent moisture damage and absorption. Dampproofing materials shall be protected from freezing. Asphalt shall be stored off the ground on pallets, and covered on top and all sides with breathable-type canvas tarpaulins. Plastic sheets cause condensation buildup and therefore shall not be used to cover dampproofing materials. Care shall be taken during storage to avoid separation or settlement of the emulsion components. Damaged or deteriorated materials shall be removed from the project site.

PART 2 PRODUCTS

2.1 EMULSION-BASED ASPHALT DAMPPROOFING

2.1.1 Fibrated Emulsion-Based Asphalt

Fibrated emulsion-based asphalt dampproofing shall be cold-applied type conforming to ASTM D 1227 Type IV, asbestos-free, manufactured of refined asphalt, emulsifiers and selected clay, fibrated with mineral fibers. For spray or brush application, emulsion shall contain a minimum of 59 percent solids by weight, 56 percent solids by volume. For trowel application, emulsion shall contain a minimum of 58 percent solids by weight, 55 percent solids by volume.

PART 3 EXECUTION

3.1 SURFACE PREPARATION

Surfaces scheduled for bituminous dampproofing shall be prepared in accordance with dampproofing manufacturer's recommendations. Surface preparation shall be approved prior to dampproofing application.

3.1.1 Protection of Surrounding Areas

Before starting the dampproofing work, the surrounding areas and surfaces shall be protected from spillage and migration of asphalt onto other work. Drains and conductors shall be protected from clogging with asphalt.

3.1.2 Masonry Surfaces

Surfaces shall be free of oil, grease, dirt, laitance, loose material, frost, debris and other contaminants. Mortar joints shall be flush and free of extraneous mortar and chipped or broken masonry.

3.2 APPLICATION OF BITUMINOUS DAMPPROOFING

3.2.1 Emulsion-Based Asphalt

Emulsion-based asphalt dampproofing work shall not be performed in temperatures below 40 degrees F. Emulsions shall have a smooth and uniform consistency at time of application. Dampproofing materials shall be applied in accordance with manufacturer's published instructions to produce a smooth uniform dry film of not less than 12 mils thick without voids or defects. Dull or porous spots shall be recoated. Dampproofing materials shall seal tightly around pipes and other items projecting through dampproofing. Rates of application shall be as follows:

a. Primer: 1/2 gallon per 100 square feet, cold-applied.

b. Fibrated Dampproofing: 2 gallons per 100 square feet, cold-applied with spray, brush or trowel.

3.3 CLEAN-UP

Surfaces of other work which are stained with dampproofing materials shall be cleaned with a cleaner recommended by dampproofing manufacturer.

3.4 PROTECTION

The completed dampproofing work shall be protected from damage during and after construction.

-- End of Section --

SECTION TABLE OF CONTENTS

DIVISION 07 - THERMAL & MOISTURE PROTECTION

SECTION 07212

MINERAL FIBER BLANKET THERMAL INSULATION

06/93

PART 1 GENERAL

1.1 REFERENCES
1.2 SUBMITTALS
1.3 DELIVERY, STORAGE, AND HANDLING
1.3.1 Delivery
1.3.2 Storage
1.4 SAFETY PRECAUTIONS
1.4.1 Respirators
1.4.2 Smoking
1.4.3 Other Safety Concerns

PART 2 PRODUCTS

2.1 BLANKET INSULATION
2.1.1 Thermal Resistance Value (R-VALUE)
2.1.2 Recycled Materials
2.1.3 Prohibited Materials
2.2 SILL SEALER INSULATION
2.3 VAPOR RETARDER
2.4 PRESSURE SENSITIVE TAPE
2.5 ACCESSORIES
2.5.1 Adhesive
2.5.2 Mechanical Fasteners

PART 3 EXECUTION

3.1 EXISTING CONDITIONS
3.2 INSTALLATION
3.2.1 Blanket Insulation
3.2.1.1 Electrical wiring
3.2.1.2 Continuity of Insulation
3.2.1.3 Cold Climate Requirement
3.2.1.4 Insulation without Affixed Vapor Retarder
3.2.1.5 Sizing of Blankets
3.2.1.6 Installation of Sill Sealer
3.2.2 Installation of Separate Vapor Retarder

-- End of Section Table of Contents --

SECTION 07212

MINERAL FIBER BLANKET THERMAL INSULATION
06/93

PART 1 GENERAL

1.1 REFERENCES

The publications listed below form a part of this specification to the extent referenced. The publications are referred to in the text by the basic designation only.

AMERICAN SOCIETY FOR TESTING AND MATERIALS (ASTM)

ASTM C 665	1991 Mineral-Fiber Blanket Thermal Insulation for Light Frame Construction and Manufactured Housing
ASTM C 930	1992 Potential Health and Safety Concerns Associated with Thermal Insulation Materials and Accessories
ASTM D 3833	1988 Water Vapor Transmission of Pressure-Sensitive Tapes
ASTM D 4397	1991 Polyethylene Sheeting for Construction, Industrial, and Agricultural Applications
ASTM E 96	1992 Water Vapor Transmission of Materials

CODE OF FEDERAL REGULATIONS (CFR)

29 CFR 1910.134	Respiratory Protection

1.2 SUBMITTALS

Government approval is required for submittals with a "GA" designation; submittals having an "FIO" designation are for information only. The following shall be submitted in accordance with Section 01300 SUBMITTAL DESCRIPTIONS:

SD-01, Manufacturer's Catalog Data

Blanket insulation; FIO. Sill sealer insulation; FIO. Vapor retarder; FIO. Pressure sensitive tape; FIO. Accessories; FIO.

Data identifying performance characteristics of insulation material. Data shall include recommended application requirements.

SD-06 Instructions

Application of Insulation; FIO.

Insulation manufacturer's recommendations for the application and installation of insulation.

1.3 DELIVERY, STORAGE, AND HANDLING

1.3.1 Delivery

Deliver materials to site in original sealed wrapping bearing manufacturer's name and brand designation, specification number, type, grade, R-value, and class. Store and handle to protect from damage. Do not allow insulation materials to become wet, soiled, crushed, or covered with ice or snow. Comply with manufacturer's recommendations for handling, storing, and protecting of materials before and during installation.

1.3.2 Storage

Inspect materials delivered to the site for damage; unload and store out of weather in manufacturer's original packaging. Store only in dry locations, not subject to open flames or sparks, and easily accessible for inspection and handling.

1.4 SAFETY PRECAUTIONS

1.4.1 Respirators

Provide installers with dust/mist respirators, training in their use, and protective clothing, all approved by National Institute for Occupational Safety and Health (NIOSH)/Mine Safety and Health Administration (MSHA) in accordance with 29 CFR 1910.134.

1.4.2 Smoking

Do not smoke during installation of blanket thermal insulation.

1.4.3 Other Safety Concerns

Consider other safety concerns and measures as outlined in ASTM C 930.

PART 2 PRODUCTS

2.1 BLANKET INSULATION

ASTM C 665, Type I, blankets without membrane coverings.

2.1.1 Thermal Resistance Value (R-VALUE)

As indicated.

2.1.2 Recycled Materials

Provide Thermal Insulation containing recycled materials to the extent practicable, provided the material meets all other requirements of this section.

2.1.3 Prohibited Materials

Do not provide materials containing more than one percent of asbestos.

2.2 SILL SEALER INSULATION

ASTM C 665, Type I.

2.3 VAPOR RETARDER

a. 6-mil thick polyethylene sheeting conforming to ASTM D 4397 and having a water vapor permeance of 1 perm or less when tested in accordance with ASTM E 96.

2.4 PRESSURE SENSITIVE TAPE

As recommended by the vapor retarder manufacturer and having a water vapor permeance rating of one perm or less when tested in accordance with ASTM D 3833.

2.5 ACCESSORIES

2.5.1 Adhesive

As recommended by the insulation manufacturer.

2.5.2 Mechanical Fasteners

Corrosion resistant fasteners as recommended by the insulation manufacturer.

PART 3 EXECUTION

3.1 EXISTING CONDITIONS

Before installing insulation, ensure that areas that will be in contact with the insulation are dry and free of projections which could cause voids, compressed insulation, or punctured vapor retarders. If moisture or other conditions are found that do not allow the workmanlike installation of the insulation, do not proceed but notify Contracting Officer of such conditions.

3.2 INSTALLATION

3.2.1 Blanket Insulation

Install and handle insulation in accordance with manufacturer's Instructions. Keep material dry and free of extraneous materials. Ensure personal protective clothing and respiratory equipment is used as required. Observe safe work practices.

3.2.1.1 Electrical wiring

Do not install insulation in a manner that would sandwich electrical wiring between two layers of insulation.

3.2.1.2 Continuity of Insulation

Install blanket insulation to butt tightly against adjoining blankets and to studs, rafters, joists, sill plates, headers and any obstructions. Provide continuity and integrity of insulation at corners, wall to ceiling joints, roof, and floor. Avoid creating thermal bridges.

3.2.1.3 Cold Climate Requirement

Place insulation to the outside of pipes.

3.2.1.4 Insulation without Affixed Vapor Retarder

Provide snug friction fit to hold insulation in place. Stuff pieces of insulation into cracks between trusses, joists, studs and other framing, such as at attic access doors, door and window heads, jambs, and sills, band joists, and headers.

3.2.1.5 Sizing of Blankets

Provide only full width blankets when insulating between trusses, joists, or studs. Size width of blankets for a snug fit where trusses, joists or studs are irregularly spaced.

3.2.1.6 Installation of Sill Sealer

Size sill sealer insulation and place insulation over top of masonry or concrete perimeter walls or concrete perimeter floor slab on grade. Fasten sill plate over insulation.

3.2.2 Installation of Separate Vapor Retarder

Apply continuous vapor retarder as indicated. Overlap joints at least 6 inches and seal with pressure sensitive tape. Seal at sill, header, windows, doors and utility penetrations. Repair punctures or tears with pressure sensitive tape.

-- End of Section --

SECTION TABLE OF CONTENTS

DIVISION 07 - THERMAL & MOISTURE PROTECTION

SECTION 07220

ROOF INSULATION

05/93

PART 1 GENERAL

1.1 REFERENCES
1.2 SUBMITTALS
1.3 STORAGE OF MATERIALS
1.4 FIRE CLASSIFICATION

PART 2 PRODUCTS

2.1 BITUMINOUS MATERIALS
2.1.1 Asphalt Bitumen
2.1.2 Asphalt Cement
2.1.3 Asphalt Primer
2.2 INSULATION
2.2.1 Composite Board Insulation
2.2.2 Expanded-Perlite Insulation Board
2.2.3 Polyisocyanurate
2.3 NAILS AND FASTENERS
2.3.1 Nails for Fastening Insulation to Flush Mounted Wood Nailers
2.3.2 Fasteners
2.3.3 Metal Disks
2.4 WOOD NAILERS

PART 3 EXECUTION

3.1 COORDINATION REQUIREMENTS
3.2 ENVIRONMENTAL CONDITIONS
3.3 SUBSTRATE PREPARATION
3.4 HEATING OF ASPHALT
3.5 INSTALLATION OF WOOD NAILERS
3.6 APPLICATION OF INSULATION
3.6.1 Mechanical Fastening
3.6.2 Steel Decks
3.6.3 Foam Insulation
3.6.4 Installation
3.6.5 Protection Requirements
3.7 INSPECTION

-- End of Section Table of Contents --

SECTION 07220

ROOF INSULATION
05/93

PART 1 GENERAL

1.1 REFERENCES

The publications listed below form a part of this specification to the extent referenced. The publications are referred to in the text by basic designation only.

AMERICAN NATIONAL STANDARDS INSTITUTE (ANSI)

ANSI A208.1	(1993) Particleboard

AMERICAN SOCIETY FOR TESTING AND MATERIALS (ASTM)

ASTM C 726	(1993) Mineral Fiber Roof Insulation Board
ASTM C 728	(1991) Perlite Thermal Insulation Board
ASTM C 984	(1983) Perlite Board and Rigid Cellular Polyurethane Composite Roof Insulation
ASTM C 1050	(1991) Rigid Cellular Polystyrene - Cellulosic Fiber Composite Roof Insulation
ASTM C 1289	(1995) Faced Rigid Cellular Polyisocyanurate Thermal Insulation Board
ASTM D 41	(1994) Asphalt Primer Used in Roofing, Dampproofing, and Waterproofing
ASTM D 312	(1989) Asphalt Used in Roofing
ASTM D 4586	(1993) Asphalt Roof Cement, Asbestos Free

FACTORY MUTUAL ENGINEERING AND RESEARCH (FM)

FM P7825	(1995; Supple 1) Approval Guide

FEDERAL SPECIFICATIONS (FS)

FS FF-N-105	(Rev B; Am 3; Int Am 4; Notice 1) Nails, Brads, Staples and Spikes: Wire, Cut and Wrought

UNDERWRITERS LABORATORIES (UL)

UL-01	(1995) Building Materials Directory

1.2 SUBMITTALS

Government approval is required for submittals with a "GA" designation;

submittals having an "FIO" designation are for information only. The following shall be submitted in accordance with Section 01300 SUBMITTAL PROCEDURES:

SD-06 Instructions

Application of Insulation; FIO.

Insulation manufacturer's recommendations for the application and installation of insulation.

SD-08 Statements

Inspection; FIO.

The inspection procedure for insulation installation, prior to start of roof insulation work.

SD-13 Certificates

Insulation; FIO.

Certificate attesting that the expanded perlite or polyisocyanurate insulation contains recovered material and showing estimated percent of recovered material.

1.3 STORAGE OF MATERIALS

Insulation shall be kept dry at all times, before, during, and after delivery to the site and shall be stored in an enclosed building or in a closed trailer. Wet insulation shall be permanently removed from the site.

1.4 FIRE CLASSIFICATION

Insulation shall have been tested as part of a roof construction assembly of the type used in this project and the construction shall be listed as Fire-Classified in UL-01 or Class I in FM P7825.

PART 2 PRODUCTS

2.1 BITUMINOUS MATERIALS

Bituminous materials shall conform to the following requirements:

2.1.1 Asphalt Bitumen

ASTM D 312, Type III or IV. Asphalt flash point, finished blowing temperature, and equiviscous temperature (EVT) shall be indicated on bills of lading or on individual containers.

2.1.2 Asphalt Cement

ASTM D 4586, Type I for horizontal surfaces; Type II for vertical surfaces.

2.1.3 Asphalt Primer

ASTM D 41.

2.2 INSULATION

Insulation shall be a standard product of the manufacturer and shall be factory marked with the manufacturer's name or trade mark, the material specification number, the R-value at 75 degrees F, and the thickness. Minimum thickness shall be as recommended by the manufacturer. Boards shall be marked individually. The thermal resistance of insulation shall be not less than the R-value shown on the drawings. The minimum thickness of tapered insulation shall be in accordance with the insulation manufacturer's recommendations for the substrate on which the tapered insulation is to be installed and shall not allow condensation within the insulation. Insulation shall contain the highest practicable percentage of material which has been recovered or diverted from solid waste, but not including material reused in a manufacturing process. Where 2 materials have the same price and performance, the one having the higher recovered material content shall be selected.

2.2.1 Composite Board Insulation

ASTM C 726, or ASTM C 984 or ASTM C 1050 or ASTM C 1289 Type III, or ASTM C 1289 Type VI. Perlite, in composite board, may be replaced with ANSI A208.1 wood particle board, 7/16 inch minimum thickness, provided that the composite board meets specified physical requirements. Composite board with wood particle board shall conform to ASTM C 1289, Type V.

2.2.2 Expanded-Perlite Insulation Board

ASTM C 728 with a minimum recovered material content of 23 percent of the expanded perlite portion of the board.

2.2.3 Polyisocyanurate

ASTM C 1289, Type I, or ASTM C 1289 Type II, having minimum recovered material content of 9 percent by weight of the polyisocyanurate portion of the board.

2.3 NAILS AND FASTENERS

Nails and fasteners shall conform to the following requirements:

2.3.1 Nails for Fastening Insulation to Flush Mounted Wood Nailers

FS FF-N-105, Type II, Style 20, of sufficient length to hold insulation securely in place.

2.3.2 Fasteners

Insulation manufacturer's recommendations except holding power, when driven, shall be not less than 40 pounds each in steel deck.

2.3.3 Metal Disks

Flat and not less than 30 gauge thickness. Disks used with nails or fasteners for securing insulation shall be minimum l inch diameter. Disks used with nails or fasteners for securing other board insulation shall be minimum 2-1/8 inches in diameter.

2.4 WOOD NAILERS

Wood nailers shall conform to Section 06100 ROUGH CARPENTRY including

preservative treatment. Edge nailers shall be not less than nominal 6 inches wide and of thickness to finish flush with the top surface of the insulation. Surface mounted nailers shall be a nominal 3 inches wide by the full thickness of the insulation.

PART 3 EXECUTION

3.1 COORDINATION REQUIREMENTS

Insulation and roofing membrane shall be finished in 1 operation up to the line of termination at the end of each day's work. Completed sections shall be waterproofed when more than 1 day is required to finish the roofing. Phased construction will not be permitted.

3.2 ENVIRONMENTAL CONDITIONS

Air temperature shall be above 40 degrees F and there shall be no visible ice, frost, or moisture on the roof deck when the insulation and roofing are installed.

3.3 SUBSTRATE PREPARATION

The substrate construction of any bay or section of the building shall be completed before insulation or vapor retarder work is begun thereon. Vents and other items penetrating the roof shall be secured in position and properly prepared for flashing. Prior to application of vapor retarder or insulation, substrate joints shall be covered with a 4 inch strip of roofing felt, embedded in and coated with asphalt cement. Substrate surface shall be smooth, clean, and dry at time of application.

3.4 HEATING OF ASPHALT

Asphalt shall not be heated higher than 75 degrees F above the EVT or 50 degrees F below the flash point, or 525 degrees F, whichever is lower. EVT and flash point temperatures of asphalt in the kettle shall be conspicuously posted on the kettle. Kettle shall be provided with automatic thermostatic controls and an accurate recording thermometer. The temperature records shall be submitted to the Contracting Officer at the end of each day's work. Kettle operators shall be in attendance at all times during heating to ensure that the maximum temperature is not exceeded. Asphalt shall be applied within a range of 25 degrees F below or above the EVT, or as specified by the manufacturer. Application temperature shall be measured at the mop bucket or mechanical applicator. Asphalt at a temperature below this range shall be returned to the kettle. Flame-heated equipment shall not be placed on the roof.

3.5 INSTALLATION OF WOOD NAILERS

Bolt anchors shall have nuts and washers countersunk, and bolts shall be cut flush with top of nailer. Powder-actuated fasteners, sized and spaced for nailer anchorage equivalent to that specified and indicated, may be used when approved. Surface mounted nailers shall be installed parallel with the roof slope and shall be spaced not over 4 feet face-to-face, except that where the insulation units are less than 4 feet in length the nailers shall be spaced to minimize cutting of the insulation.

3.6 APPLICATION OF INSULATION

Insulation shall be laid in 2 or more layers. Units of insulation shall be

laid in courses parallel with the roof slope. End joints shall be staggered. Insulation shall be cut to fit neatly against adjoining surfaces. Joints between insulation boards shall not exceed 1/4 inch. Joints in successive layers shall be staggered with respect to joints of preceding layer. Where insulation is applied over steel deck, long edge joints shall continuously bear on surfaces of the steel deck. Insulation which can be readily lifted after installation is not considered to be adequately secured. Insulation shall be applied so that all roof insulation applied each day is waterproofed the same day. Phased construction will not be permitted.

3.6.1 Mechanical Fastening

On steel decks, or any slope exceeding 1/2 inch per foot, the first layer of insulation shall be mechanically fastened. Method of attachment shall be in accordance with recommendations of the insulation manufacturer and requirements specified.

3.6.2 Steel Decks

Uninsulated steel decks shall have insulation applied to span the steel deck flutes and to act as an underlayment for the roof membrane. First layer of insulation on steel deck shall be cellular glass, mineral fiber board, perlite board.

3.6.3 Foam Insulation

Polyisocyanurate foam insulations shall be isolated from modified bitumen roof membrane by a separate or composite layer of perlite.

3.6.4 Installation

Except for the first layer on steel deck, insulation layers shall be laid in solid moppings of hot asphalt applied at a rate of at least 20 pounds per square. Asphalt shall not be applied further than one panel length ahead of roof insulation being installed. Where roof slopes are greater than 1/2 inch per foot, roof insulation shall be held in place by both asphalt mopping and mechanical fasteners. Asphalt primer shall be applied at the rate of 1 gallon per square over the entire surface to be mopped when the insulation is applied over concrete deck. The edges of insulation boards adjoining vented nailers shall be kept free of asphalt.

3.6.5 Protection Requirements

The insulation shall be kept dry at all times. Insulation boards shall not be kicked into position. Exposed edges of the insulation shall be protected by cutoffs at the end of each work day or whenever precipitation is imminent. Cutoffs shall be 2 layers of bituminous-saturated felt set in plastic bituminous cement. Cutoffs shall be removed when work is resumed. Edges of insulation at open spaces between insulation and parapets or other walls and spaces at curbs, scuttles, and expansion joints, shall be protected until permanent roofing and flashing is applied. Storing, walking, wheeling, or trucking directly on insulation or on roofed surfaces will not be permitted. Smooth, clean board or plank walkways, runways, and platforms shall be used, as necessary to distribute weight to conform to indicated live load limits of roof construction.

3.7 INSPECTION

The Contractor shall establish and maintain an inspection procedure to assure compliance of the installed roof insulation with the contract requirements. Any work found not to be in compliance with the contract shall be promptly removed and replaced or corrected in an approved manner. Quality control shall include, but not be limited to, the following:

a. Observation of environmental conditions; number and skill level of insulation workers; start and end time of work.

b. Verification of certification, listing or label compliance with FM P7825.

c. Verification of proper storage and handling of insulation and vapor retarder materials before, during, and after installation.

d. Inspection of vapor retarder application, including edge envelopes and mechanical fastening.

e. Inspection of mechanical fasteners; type, number, length, and spacing.

f. Coordination with other materials, cants, sleepers, and nailing strips.

g. Inspection of insulation joint orientation and laps between layers, joint width and bearing of edges of insulation on deck.

h. Installation of cutoffs and proper joining of work on subsequent days.

i. Continuation of complete roofing system installation to cover insulation installed same day.

-- End of Section --

SECTION TABLE OF CONTENTS

DIVISION 07 - THERMAL & MOISTURE PROTECTION

SECTION 07250

SPRAY-APPLIED FIREPROOFING

01/94

PART 1 GENERAL

1.1 REFERENCES
1.2 SUBMITTALS
1.3 DELIVERY AND STORAGE
1.4 ENVIRONMENTAL CONDITIONS
1.4.1 Temperature
1.4.2 Ventilation
1.5 INSTALLER QUALIFICATIONS
1.6 MANUFACTURER'S SERVICES
1.7 FIRE RESISTANCE RATING
1.8 EXTENT OF FIREPROOFING

PART 2 PRODUCTS

2.1 SPRAY-APPLIED FIREPROOFING
2.1.1 Dry Density and Cohesion/Adhesion
2.1.1.1 Concealed Structural Components
2.1.1.2 Exposed Structural Components
2.1.1.3 Mechanical Rooms and Storage Areas
2.1.2 Deflection
2.1.3 Bond-Impact
2.1.4 Compressive Strength
2.1.5 Corrosion
2.2 SEALER
2.3 WATER

PART 3 EXECUTION

3.1 SURFACE PREPARATION
3.2 Protection
3.3 MIXING
3.4 APPLICATION
3.4.1 Sequence
3.4.2 Application Technique
3.5 FIELD TESTS
3.5.1 Thickness, Density, Cohesion/Adhesion
3.5.2 Repair
3.5.3 Manufacturer's Inspection

-- End of Section Table of Contents --

SECTION 07250

SPRAY-APPLIED FIREPROOFING
01/94

PART 1 GENERAL

1.1 REFERENCES

The publications listed below form a part of this specification to the extent referenced. The publications are referred to in the text by basic designation only.

AMERICAN SOCIETY FOR TESTING AND MATERIALS (ASTM)

ASTM E 119	(1988) Fire Tests of Building Construction Materials
ASTM E 605	(1993) Thickness and Density of Sprayed Fire-Resistive Material (SFRM) Applied to Structural Members
ASTM E 736	(1992) Cohesion/Adhesion of Sprayed Fire-Resistive Materials Applied to Structural Members
ASTM E 759	(1992) Effect of Deflection on Sprayed Fire-Resistive Material Applied to Structural Members
ASTM E 760	(1992) Effect of Impact on Bonding of Sprayed Fire-Resistive Material Applied to Structural Members
ASTM E 761	(1992) Compressive Strength of Sprayed Fire-Resistive Material Applied to Structural Members
ASTM E 937	(1993) Corrosion of Steel by Sprayed Fire-Resistive Material (SFRM) Applied to Structural Members
ASTM E 1042	(1992) Acoustically Absorptive Materials Applied by Trowel or Spray
ASTM G 21	(1990) Determining Resistance of Synthetic Polymeric Materials to Fungi

UNDERWRITERS LABORATORIES (UL)

UL-05	(1995) Fire Resistance Directory
UL 263	(1992) Fire Tests of Building Construction and Materials

1.2 SUBMITTALS

Government approval is required for submittals with a "GA" designation; submittals having an "FIO" designation are for information only. The following shall be submitted in accordance with Section 01300 SUBMITTAL PROCEDURES:

SD-01 Data

Fireproofing Material; FIO.

Data identifying performance characteristics of fireproofing material. Data shall include recommended application requirements and indicate thickness of fireproofing that must be applied to achieve each required fire rating.

SD-09 Reports

UL Test Assembly; FIO.

Reports and test records, attesting that the fireproofing material conforms to the specified requirements. Each test report shall conform to the report requirements specified by the test method.

Field Tests; FIO.

Test reports documenting results of tests on the applied material in the project. Report shall include defects identified, repair procedures, and results of the retests when required.

SD-13 Certificates

Installer Qualifications; FIO.

Manufacturer's certification that each listed installer is qualified and trained to install the specified fireproofing. Evidence that each fireproofing installer has had a minimum of 3 years experience in installing the specified type of fireproofing.

Surface Acceptability; FIO.

Manufacturer's certification that surfaces to be protected have been inspected and are acceptable to receive spray-applied fireproofing. The statement shall list the structural members and the areas that have been inspected and certified.

Manufacturer's Inspection; FIO.

Manufacturer's certification that the spray-applied fireproofing in the entire project complies with the manufacturer's criteria and recommendations.

SD-14 Samples

Spray-Applied Fireproofing; FIO.

One sample panel, 18 inches square, for each specified type of fireproofing. Also, a designated sample area of not less than 100 square feet shall be prepared. Sample area shall be representative of typical installation of fireproofing including beams, columns and attachments.

Equipment, materials and procedures used in the sample area shall be the same as, or representative of that to be used in the work. The sample area shall be approved prior to proceeding with fireproofing work in any other area. The approved sample area shall be used as a reference standard for applied fireproofing material. Sample area shall remain in place and open to observation until all spray-applied fireproofing is completed and accepted, at which time it may become part of the work.

1.3 DELIVERY AND STORAGE

Packaged material shall be delivered in the original unopened containers, marked to show the names of the brand and the manufacturer. Fireproofing material shall be kept dry until ready to be used, and shall be stored off the ground, under cover and away from damp surfaces. Damaged or opened containers will be rejected. Material with shelf-life shall be applied prior to expiration of the shelf-life.

1.4 ENVIRONMENTAL CONDITIONS

1.4.1 Temperature

Substrate and ambient air temperatures shall be maintained above 40 degrees F during application and for 24 hours before and after application. Relative humidity shall be maintained within the limits recommended by the fireproofing manufacturer.

1.4.2 Ventilation

Adequate ventilation shall be provided to properly dry the fireproofing after application. In enclosed areas, a minimum of 4 air exchanges per hour shall be provided by forced air circulation.

1.5 INSTALLER QUALIFICATIONS

Each installer of fireproofing material shall be trained and have a minimum of 3 years experience in the installation of fireproofing of the type specified.

1.6 MANUFACTURER'S SERVICES

The manufacturer or his representative shall be onsite prior to, periodically during, and at completion of the application, to provide the specified inspections and certifications; and to ensure that preparations are adequate and that the material is applied according to manufacturer's recommendations and the contract requirements.

1.7 FIRE RESISTANCE RATING

Fire resistance ratings shall be in accordance with the fire rated assemblies listed in UL-05. Proposed materials not listed in UL-05 shall have fire resistance ratings at least equal to the UL-05 ratings as determined by an approved independent testing laboratory based on tests specified in UL 263 or ASTM E 119.

1.8 EXTENT OF FIREPROOFING

All structural steel, with the exception of the joists and the metal deck shall be protected with spray-applied fireproofing to a fire resistance hour-rating of 2 hours unless otherwise indicated on the Drawings.

PART 2 PRODUCTS

2.1 SPRAY-APPLIED FIREPROOFING

Spray-applied fireproofing material, including sealer, shall conform to ASTM E 1042, Class (a), Category A, either Type I or Type II, except that the dust removed shall not exceed 0.0025 gram per square foot of fireproofing material applied as specified in the project. Material shall be asbestos free, and shall resist fungus for a period of 28 days when tested in accordance with ASTM G 21.

2.1.1 Dry Density and Cohesion/Adhesion

Fireproofing shall have a minimum ASTM E 605 dry density and ASTM E 736 cohesion/adhesion properties as follows:

2.1.1.1 Concealed Structural Components

Fireproofing for structural components concealed above the ceiling, or within a wall, chase, or furred space, shall have a minimum average applied dry density of 15 pounds per cubic foot and a cohesion/adhesion strength of 200 pounds per square foot.

2.1.1.2 Exposed Structural Components

Fireproofing for exposed structural components, except where otherwise specified or indicated, shall have a minimum applied dry density of 22 pounds per cubic foot and a cohesion/adhesion strength of 300 pounds per square foot.

2.1.1.3 Mechanical Rooms and Storage Areas

Fireproofing for structural components located in mechanical rooms and storage areas shall have a minimum applied dry density of 40 pounds per cubic foot and a cohesion/adhesion strength of 400 pounds per square foot.

2.1.2 Deflection

Spray-applied fireproofing shall not crack, spall, or delaminate when tested in accordance with ASTM E 759.

2.1.3 Bond-Impact

Spray-applied fireproofing material shall not crack, spall or delaminate when tested in accordance with ASTM E 760.

2.1.4 Compressive Strength

The minimum compressive strength shall be 1000 psf when tested in accordance with ASTM E 761.

2.1.5 Corrosion

Spray-applied fireproofing material shall not contribute to corrosion of test panels when tested as specified in ASTM E 937.

2.2 SEALER

Sealer shall be the type approved by the manufacturer of the fireproofing material and shall be white color.

2.3 WATER

Water used for material mixing and surface preparation shall be potable.

PART 3 EXECUTION

3.1 SURFACE PREPARATION

Surfaces to be fireproofed shall be thoroughly cleaned of dirt, grease, oil, paint, loose rust, rolling lubricant, mill scale or other contaminants that will interfere with the proper bonding of the sprayed fireproofing to the substrate. Overhead areas to be fireproofed shall be cleared of all obstructions interfering with the uniform application of the spray-applied fireproofing. Hardware such as support sleeves, inserts, clips, hanger attachment devices and the like shall be installed prior to the application of the fireproofing. Condition of the surfaces shall be acceptable to the manufacturer prior to application of spray-applied fireproofing. Applications listed for use on primed surfaces shall be coordinated with the manufacturer and detailed in submittal item SD-01 Data.

3.2 Protection

Surfaces not to receive spray-applied fireproofing shall be covered to prevent contamination by splatter, rebound and overspray. Exterior openings in areas to receive spray-applied fireproofing shall be covered prior to and during application of fireproofing with tarpaulins or other approved material. Surfaces not to receive fireproofing shall be cleaned of fireproofing and sealer.

3.3 MIXING

Fireproofing material shall be mixed in accordance with the manufacturer's recommendations.

3.4 APPLICATION

3.4.1 Sequence

Prior to application of fireproofing on each floor, the manufacturer shall inspect and approve application equipment, water supply and pressure, and the application procedures. Fireproofing shall be applied to underside of steel roof deck or steel floor assemblies only after respective roof or floor construction is complete. Fireproofing material shall be applied prior to the installation of ductwork, piping and conduits which would interfere with uniform application of the fireproofing. No roof traffic shall be allowed during application and curing period.

3.4.2 Application Technique

Water pressure and volume shall be maintained to manufacturer's recommendations throughout the fireproofing application. Fireproofing material shall be applied to the thickness established for the specified fire resistance rating, in accordance with the procedure recommended by the manufacturer, and to a uniform density and texture. Fireproofing material shall not be tamped to achieve the desired density. Sealer shall be applied to all fireproofing.

3.5 FIELD TESTS

The applied fireproofing shall be tested in approved locations for density, and cohesion/adhesion force as specified, and for thickness in accordance with ASTM E 605, by an approved independent testing laboratory. Two sets of tests shall be conducted on each floor or 10,000-square-foot area, whichever is less, at the approved locations. Any area showing less than minimum requirements shall be rejected and corrected. Proposed corrective measures, in writing, shall be approved before starting the corrective action. Corrected work shall be retested.

3.5.1 Thickness, Density, Cohesion/Adhesion

Each structural component type shall be tested at beams, and columns. Minimum average thickness shall be as indicated or required by UL-05. Density and cohesion/adhesion shall be as specified.

3.5.2 Repair

Additional fireproofing material may be added to provide proper thickness. Rejected areas of fireproofing shall be corrected to meet specified requirements by adding fireproofing material to provide the proper thickness, or by removing defects and respraying with new fireproofing material. Repairs shall use same type of fireproofing material as originally applied. Repaired areas shall be retested and reinspected. Fireproofing material shall be applied to voids or damaged areas by hand-trowel, or by respraying.

3.5.3 Manufacturer's Inspection

The manufacturer shall inspect the fireproofing work after the work is completed on each floor or area, including testing, repair and clean-up, and shall certify that the work complies with the manufacturer's criteria and recommendations. Before the sprayed material is covered, and after all of the fireproofing work is completed, including repair, testing, and clean-up; and after mechanical, electrical and other work in contact with fireproofing material has been completed, the manufacturer shall re-inspect the work and certify that the entire project complies with the manufacturer's criteria and recommendations.

-- End of Section --

SECTION TABLE OF CONTENTS

DIVISION 07 - THERMAL & MOISTURE PROTECTION

SECTION 07270

FIRESTOPPING

03/93

PART 1 GENERAL

1.1 REFERENCES
1.2 SUBMITTALS
1.3 GENERAL REQUIREMENTS
1.4 STORAGE AND DELIVERY
1.5 INSPECTION
1.6 INSTALLER QUALIFICATIONS

PART 2 PRODUCTS

2.1 FIRESTOPPING MATERIALS
2.1.1 Fire Hazard Classification
2.1.2 Toxicity
2.1.3 Fire Resistance Rating
2.1.3.1 Through-Penetrations
2.1.3.2 Construction Joints and Gaps

PART 3 EXECUTION

3.1 PREPARATION
3.2 INSTALLATION
3.3 INSPECTION

-- End of Section Table of Contents --

SECTION 07270

FIRESTOPPING
03/93

PART 1 GENERAL

1.1 REFERENCES

The publications listed below form a part of this specification to the extent referenced. The publications are referred to in the text by basic designation only.

AMERICAN SOCIETY FOR TESTING AND MATERIALS (ASTM)

ASTM E 84	(1994) Surface Burning Characteristics of Building Materials
ASTM E 814	(1994b) Fire Tests of Through-Penetration Fire Stops

UNDERWRITERS LABORATORIES (UL)

UL-05	(1994; Supple) Fire Resistance Directory
UL 723	(1993; Rev Apr 1994) Test for Surface Burning Characteristics of Building Materials
UL 1479	(1994) Fire Tests of Through-Penetration Firestops

1.2 SUBMITTALS

Government approval is required for submittals with a "GA" designation; submittals having an "FIO" designation are for information only. The following shall be submitted in accordance with Section 01300 SUBMITTAL PROCEDURES:

SD-04 Drawings

Firestopping Materials; GA.

Detail drawings including manufacturer's descriptive data, typical details, installation instructions and the fire-test data and/or report as appropriate for the fire resistance rated construction and location. Submittal shall indicate the firestopping material to be provided for each type of application. When more than 5 penetrations are to receive firestopping, drawings shall indicate location and type of application.

SD-13 Certificates

Firestopping Materials; FIO.

Certificates attesting that firestopping material complies with the specified requirements. The label or listing of the Underwriters

Laboratories will be acceptable evidence. In lieu of the label or listing, a written certificate may be submitted from an approved, nationally recognized testing agency equipped to perform such services, stating that the items have been tested and conform to the specified requirements and testing methods.

Installer Qualifications; FIO.

Manufacturer's certification stating that each installer is qualified and trained to install the specified firestopping material.

Inspection; FIO.

Manufacturer's representative certification stating that firestopping work has been inspected and found to be applied according to the manufacturer's recommendations and the specified requirements.

1.3 GENERAL REQUIREMENTS

Firestopping shall consist of furnishing and installing a material or a combination of materials to form an effective barrier against the spread of flame, smoke and gases, and maintain the integrity of fire resistance rated walls, partitions, including through-penetrations and construction joints. Through-penetrations include the annular space around pipes, tubes, conduit, wires, cables and vents. Construction joints include those used to accommodate expansion, contraction, wind, or seismic movement; firestopping material shall not interfere with the required movement of the joint.

1.4 STORAGE AND DELIVERY

Materials shall be delivered in the original unopened packages or containers showing name of the manufacturer and the brand name. Materials shall be stored off the ground and shall be protected from damage and exposure to elements. Damaged or deteriorated materials shall be removed from the site.

1.5 INSPECTION

A representative of the manufacturer shall be on the site during the initial firestopping applications and periodically during the application period to ensure that preparations are adequate, that surfaces are clean and suitable for application, and that materials are applied according to the manufacturer's recommendations and the contract requirements.

1.6 INSTALLER QUALIFICATIONS

Each installer of firestopping material shall be trained and have a minimum of 3 years experience in the installation of firestopping of the type specified.

PART 2 PRODUCTS

2.1 FIRESTOPPING MATERIALS

Firestopping materials shall consist of commercially manufactured products complying with the following minimum requirements:

2.1.1 Fire Hazard Classification

Material shall have a flame spread of 25 or less, and a smoke developed rating of 50 or less, when tested in accordance with ASTM E 84 or UL 723. Material shall be an approved firestopping material as listed in UL-05.

2.1.2 Toxicity

Material shall be nontoxic to humans at all stages of application.

2.1.3 Fire Resistance Rating

Firestopping will not be required to have a greater fire resistance rating than that of the assembly in which it is being placed.

2.1.3.1 Through-Penetrations

Firestopping materials for through-penetrations, as described in paragraph GENERAL REQUIREMENTS, shall provide "F" and "T" fire resistance ratings in accordance with ASTM E 814 or UL 1479, except that T Ratings are not required for penetrations smaller than or equal to a 4 inch nominal pipe or 16 square inches in overall cross sectional area. Fire resistance ratings shall be the following:

a. Penetrations of Fire Resistance Rated Walls and Partitions: F Rating = 1 hour, T Rating = 1 hour.

2.1.3.2 Construction Joints and Gaps

Fire resistance ratings of construction joints, as described in paragraph GENERAL REQUIREMENTS, and gaps shall be the same as the construction in which they occur.

PART 3 EXECUTION

3.1 PREPARATION

Areas to receive firestopping shall be free of dirt, grease, oil, or loose materials which may affect the fitting or fire resistance of the firestopping system.

3.2 INSTALLATION

Firestopping material shall completely fill void spaces regardless of geometric configuration, subject to tolerance established by the manufacturer. Firestopping for filling floor voids 4 inches or more in any direction shall be capable of supporting the same load as the floor is designed to support or shall be protected by a permanent barrier to prevent loading or traffic in the firestopped area. Firestopping shall be installed in accordance with manufacturer's written instructions. Firestopping shall be provided in the following locations, except in floor slabs on grade:

a. Penetrations of duct, conduit, tubing, cable and pipe through floors and through fire-resistance rated walls, partitions, and ceiling-floor assemblies.

b. Penetrations of vertical shafts such as pipe chases, and utility chutes.

c. Gaps at the intersection of floor slabs and curtain walls, including inside of hollow curtain walls at the floor slab.

d. Gaps at perimeter of fire-resistance rated walls and partitions, such as between the top of the walls and the bottom of roof decks.

e. Construction joints in floors and fire rated walls and partitions.

f. Other locations where required to maintain fire resistance rating of the construction.

3.3 INSPECTION

Firestopped areas shall not be covered or enclosed until inspection is complete and approved. A manufacturer's representative shall inspect the applications initially and periodically during the work to assure that the completed work has been accomplished according to the manufacturer's written instructions and the specified requirements.

-- End of Section --

SECTION TABLE OF CONTENTS

DIVISION 07 - THERMAL & MOISTURE PROTECTION

SECTION 07535

MODIFIED BITUMEN ROOFING

06/95

PART 1 GENERAL

1.1 REFERENCES
1.2 SYSTEM DESCRIPTION
1.3 SUBMITTALS
1.4 STORAGE OF MATERIALS
1.5 COORDINATION REQUIREMENTS
1.5.1 Insulation
1.5.2 Flashings
1.5.3 Sheet Metalwork
1.6 ENVIRONMENTAL CONDITIONS
1.7 FLAME HEATED EQUIPMENT
1.8 ELECTRIC-HEATED EQUIPMENT
1.9 FIRE AND WIND UPLIFT REQUIREMENTS
1.10 WARRANTY

PART 2 PRODUCTS

2.1 PRIMER
2.2 ASPHALT
2.3 BITUMINOUS CEMENT
2.4 BASE SHEET
2.5 MODIFIED BITUMEN SHEET
2.6 NAILS AND FASTENERS
2.7 SURFACING MATERIAL
2.7.1 Granules
2.8 ADHESIVE
2.9 WALKWAY SURFACES
2.10 INSULATION

PART 3 EXECUTION

3.1 PREPARATION REQUIREMENTS
3.2 INSTALLATION OF CANTS
3.3 CONDITION OF SURFACES
3.4 MECHANICAL APPLICATION DEVICES
3.5 PRIMING
3.6 HEATING OF BITUMEN
3.7 BITUMEN APPLICATION
3.8 PITCH PANS
3.9 APPLICATIONS OF BASE SHEET
3.10 MODIFIED BITUMEN MEMBRANE APPLICATION
3.11 TERMINATIONS AT PERIMETERS
3.12 PROTECTION OF APPLIED ROOFING
3.13 FLASHINGS
3.14 WALKWAYS

3.15 FIRE WATCH

-- End of Section Table of Contents --

SECTION 07535

MODIFIED BITUMEN ROOFING
06/95

PART 1 GENERAL

1.1 REFERENCES

The publications listed below form a part of this specification to the extent referenced. The publications are referred to in the text by basic designation only.

AMERICAN SOCIETY FOR TESTING AND MATERIALS (ASTM)

ASTM D 41	(1994) Asphalt Primer Used in Roofing, Dampproofing, and Waterproofing
ASTM D 312	(1989) Asphalt Used in Roofing
ASTM D 517	(1992) Asphalt Plank
ASTM D 3746	(1985; R 1991) Impact Resistance of Bituminous Roofing Systems
ASTM D 4586	(1993) Asphalt Roof Cement, Asbestos Free
ASTM D 4601	(1994) Asphalt-Coated Glass Fiber Base Sheet Used in Roofing
ASTM D 5147	(1991) Sampling and Testing Modified Bituminous Sheet Material

FACTORY MUTUAL ENGINEERING AND RESEARCH (FM)

FM P7825	(1995) Approval Guide

UNDERWRITERS LABORATORIES (UL)

UL-01	(1995) Building Materials Directory
UL 790	(1983; Rev thru May 1993) Tests for Fire Resistance of Roof Covering Materials
UL 1256	(1993; Rev thru Apr 1995) Fire Test of Roof Deck Constructions

1.2 SYSTEM DESCRIPTION

The modified bitumen roofing system shall consist of a manufacturer's standard, prefabricated, reinforced polymer-modified bitumen membrane, with base sheet, and insulation as specified and indicated. The manufacturer shall have a minimum of 5 years experience in manufacturing of the proposed modified bitumen sheet roofing for similar applications.

1.3 SUBMITTALS

Government approval is required for submittals with a "GA" designation; submittals having an "FIO" designation are for information only. The following shall be submitted in accordance with Section 01300 SUBMITTAL PROCEDURES:

SD-06 Instructions
Materials and Installation; GA.

Manufacturer's instructions, including membrane description and performance data, detailed procedure for installation, and safety precautions, prior to the start of roofing work.

SD-13 Certificates

Qualifications; FIO.

Evidence that the manufacturer has a minimum of 5 years experience manufacturing modified bitumen roofing. The roofing system applicator shall be approved by the modified bitumen roofing manufacturer, and shall have a minimum of 3 years experience as an approved applicator. A list of installations using the same products and applicator as proposed shall be included.

Materials; FIO.

Certificates of compliance for felts, bitumens, and membrane sheet.

1.4 STORAGE OF MATERIALS

Felts and roofing sheets shall be kept dry before, during, and after delivery to the site. Felts and roofing sheets shall be stored on end one level high, in an enclosed building or trailer and on platforms, off the deck or floor. Felts and sheets shall be maintained at a temperature above 50 degrees F for 24 hours immediately before laying.

1.5 COORDINATION REQUIREMENTS

The work shall be coordinated with other trades to ensure that components are available when they are to be secured or stripped into the roofing system.

1.5.1 Insulation

Application of roofing shall immediately follow application of insulation as a continuous operation.

1.5.2 Flashings

Modified bituminous sheet shall be used for flashings where the roof deck abuts angles, vertical surfaces, edge metal, and penetrations, unless otherwise specified or indicated. Flashing shall be installed as the work progresses.

1.5.3 Sheet Metalwork

Sheet metalwork specified in Section 07600 SHEET METALWORK, GENERAL shall be coordinated with roofing operations.

1.6 ENVIRONMENTAL CONDITIONS

Air temperature shall be above 40 degrees F and there shall be no visible ice, frost, or moisture on the roof deck at the time roofing is installed.

1.7 FLAME HEATED EQUIPMENT

Flame heated kettles shall not be placed on the roof. Torch application shall not be used. Open flame equipment shall not be left unattended while ignited.

1.8 ELECTRIC-HEATED EQUIPMENT

Adequate electrical service shall be provided as required by the manufacturer of the equipment, to insure proper application of the roofing materials.

1.9 FIRE AND WIND UPLIFT REQUIREMENTS

The complete roof system shall have a UL 1256, UL 790, Class A or B classification, be listed as "fire classified" in UL-01, and bear the UL label or be listed as a Class I Roof Deck in FM P7825. Ratings from other independent laboratories may be substituted provided that the tests, requirements and ratings are documented to be equivalent, to the satisfaction of the Contracting Officer.

1.10 WARRANTY

Manufacturer's standard warranty for the roofing system shall be provided for not less than 10 years from acceptance of the work. Warranty shall state that manufacturer shall repair or replace defective materials if the roofing system leaks or allows the insulation beneath the membrane to become wet during the period of the warranty.

PART 2 PRODUCTS

2.1 PRIMER

Primer shall conform to ASTM D 41.

2.2 ASPHALT

Asphalt shall conform to ASTM D 312, Type III for slopes up to 25 percent (1/4 vertical/horizontal) and Type IV for slopes up to 50 percent (1/2 vertical/horizontal).

2.3 BITUMINOUS CEMENT

Bituminous cement shall conform to ASTM D 4586.

2.4 BASE SHEET

Non venting base sheet shall conform to ASTM D 4601, Type II.

2.5 MODIFIED BITUMEN SHEET

Modified bitumen sheet shall be a bitumen modified by styrene butadiene styrene (SBS). Sheets shall be uniform in thickness and appearance, and free from blisters or tape splices. Sheets shall not stick to the roll or

stack, and shall be suitable for joining along the entire length by the procedure recommended by the manufacturer. Sheet shall be reinforced with fiber made from polypropylene or polyester, and shall meet the following requirements:

MODIFIED BITUMEN SHEET PROPERTIES

Maximum Load/Elongation, ASTM D 5147 weakest (longitudinal or transverse) direction:	
Maximum load, minimum	90 lbf/in.
Elongation, minimum, when reinforced with: polyester or polypropylene	40 percent
Tear Strength, ASTM D 5147	
Minimum	80 pounds
Low Temperature Flexibility, ASTM D 5147	SBS: minus 15 degrees F APP: plus 15 degrees F
Impact Resistance, ASTM D 3746	No Damage

2.6 NAILS AND FASTENERS

Nails and fasteners shall be an approved type recommended by the roofing felt or membrane manufacturer.

2.7 SURFACING MATERIAL

Surfacing shall be factory applied granules requiring no further coating.

2.7.1 Granules

Provide additional granules as required for embedding into asphalt that is exposed at the edges of sheets.

2.8 ADHESIVE

Adhesive shall be an approved type recommended by the membrane manufacturer.

2.9 WALKWAY SURFACES

Walkway surfaces shall be mineral asphalt plank, ASTM D 517, minimum 3/4 inch thick. Set plank in asphalt in accordance with manufacturer's recommendations.

2.10 INSULATION

Insulation shall be compatible with the membrane, as recommended by the membrane manufacturer's printed instructions, and as specified in Section 07220 ROOF INSULATION.

PART 3 EXECUTION

3.1 PREPARATION REQUIREMENTS

The substrate construction of any bay or section of the building shall be completed before roofing work is begun thereon. Vents and other items penetrating the roof shall be secured in position and properly prepared for flashing. Nailers, curbs and other items attached to roof surface shall be in place before roofing is begun.

3.2 INSTALLATION OF CANTS

Cants shall be installed in the angles formed between the roof and walls or other vertical surfaces. Cants shall be laid in a solid coat of bituminous cement just prior to laying the base sheet or membrane. Cants shall be continuous, and shall be installed in lengths as long as practicable.

3.3 CONDITION OF SURFACES

Surfaces shall be inspected and approved immediately prior to application of roofing and flashings. The roofing and flashings shall be applied to a smooth and firm surface free from ice, frost, visible moisture, dirt, projections, and foreign materials. Modified bitumen membrane shall be isolated from coal tar pitch.

3.4 MECHANICAL APPLICATION DEVICES

Mechanical application devices shall be mounted on pneumatic-tired wheels, and shall be designed and maintained to operate without damaging the insulation, roofing membrane, or structural components.

3.5 PRIMING

Concrete, masonry and metal surfaces to receive bitumen shall be uniformly coated with primer at a rate of not less than 1 gallon per square and allowed to dry.

3.6 HEATING OF BITUMEN

Asphalt shall not be heated higher than 75 degrees F above the EVT or 50 degrees F below the flash point or 525 degrees F (maximum) whichever is lower. EVT and flash point temperatures of asphalt in the kettle shall be conspicuously posted on the kettle. Heating kettle shall be provided with automatic thermostatic control and an accurate recording thermometer. The temperature records shall be submitted to the Contracting Officer at the end of each day's work. Kettle operators shall be in attendance at all times during the heating to ensure that the maximum temperature specified is not exceeded. An asphalt tanker shall be treated as a kettle.

3.7 BITUMEN APPLICATION

Asphalt shall be applied within 25 degrees F below or above the EVT, or 400 degrees F, whichever is higher. Application temperatures shall be measured at the mop bucket or mechanical applicator. Bitumen at a temperature below the recommended temperature shall be returned to the kettle.

3.8 PITCH PANS

Prepare and install sheet metal pans in accordance with manufacturer's recommendations. Provide flashing at pitch pans in accordance with shop drawings. Fill pitch pan with material as recommended by the manufacturer.

3.9 APPLICATIONS OF BASE SHEET

Base sheet shall be applied, shingle fashion, in a continuous operation, with side laps in accordance with manufacturer's printed instructions. End laps shall be not less than 6 inches and staggered a minimum of 24 inches. Base sheets shall be applied at right angles to the slope (except on curved or steep deck) and laps shall face down the slope.

3.10 MODIFIED BITUMEN MEMBRANE APPLICATION

Membrane shall be two plies. Each sheet in each ply shall be fully adhered to the underlying surface. Sheet edges shall lie flat, with no fishmouths or wrinkles. Installation shall begin at the low point of the roof and progress to the high point with each sheet installed shingle fashion. Each sheet shall be unrolled to provide 4 inch side laps and 6 inch end laps. End laps shall be staggered not less than 24 inches. Laps shall not coincide with laps of base layers except at lines of permanent termination. Sheets shall be embedded in hot solid-mopped asphalt, applied at a rate of 20 to 30 pounds per square. Hot asphalt shall flow out of all side and end laps. End laps shall be back-mopped. The underside of each sheet and the laps of the preceding roll shall be heated with a torch or electric heater and trowelled or rolled into place to provide a full adhesion of the membrane in a flow of modified bitumen of at least 3/8 inch but not more than 1 inch on all side and end laps. At locations where sheets are mopped into asphalt, apply granules in asphalt exposed at edges and ends for similiar appearance to adjacent sheet.

3.11 TERMINATIONS AT PERIMETERS

The modified bitumen membrane shall extend up abutting surface at least 4 inches or 2 inches above the top of the cant.

3.12 PROTECTION OF APPLIED ROOFING

At end of day's work or whenever precipitation is imminent, the terminated edge of the roofing shall be sealed with two full width strips of roofing felt set in and coated with bituminous cement or hot mopped asphalt. One half-width of strips shall be extended up and over the finished roofing and the other half-width extended out and onto the bare roof deck or existing membrane. Sealing strips shall be removed before continuing installation of roofing. To facilitate sealing, termination edges may be straightened with pieces of insulation board which shall be removed when work is resumed.

3.13 FLASHINGS

Flashings shall be provided over cants, in the angles formed at walls and other vertical surfaces, and where required to make the work watertight. Modified bitumen flashings shall be used, except where metal flashings are specified in other sections of the specifications.

3.14 WALKWAYS

Walkways shall be mineral-surfaced asphalt planks, back-mopped and embedded in the flood coat prior to aggregate surfacing. Install walkway in configuration as indicated on the Drawings.

3.15 FIRE WATCH

Fire watch shall be provided continuously during and for at least 1 hour

following torch application. At least two 2-1/2 gallon containers of water and two 15 pound carbon dioxide extinguishers shall be available during the fire watch. When work is interrupted, or at the end of a section of roofing, and at end of each day's work, areas which had been subjected to torch applications shall be surveyed with an infra-red sensing device. Hot spots shall be cooled and re-surveyed. If a hot spot persists, the roof shall be cut open and any smoldering shall be extinguished before the foreman leaves the site.

-- End of Section --

SECTION TABLE OF CONTENTS

DIVISION 07 - THERMAL & MOISTURE PROTECTION

SECTION 07600

SHEET METALWORK, GENERAL

10/94

PART 1 GENERAL

1.1 REFERENCES
1.2 GENERAL REQUIREMENTS
1.2.1 Coordination
1.3 SUBMITTALS
1.4 DELIVERY, STORAGE, AND HANDLING

PART 2 PRODUCTS

2.1 MATERIALS
2.1.1 Accessories
2.1.2 Bituminous Cement
2.1.3 Silcone Sealant
2.1.4 Fasteners
2.1.5 Felt
2.1.6 Polyvinyl Chloride (PVC) Reglets
2.1.7 Copper
2.1.8 Stainless Steel
2.1.9 Steel Sheet, Zinc-Coated (Galvanized)
2.1.9.1 Finish
2.1.10 Solder
2.1.11 Through-Wall Flashing
2.1.12 Pitch Pans

PART 3 EXECUTION

3.1 GENERAL
3.2 EXPANSION JOINTS
3.2.1 CONNECTIONS AND JOINTING
3.2.2 Soldering
3.2.3 Riveting
3.2.4 Seaming
3.3 CLEATS
3.4 FLASHINGS
3.4.1 Base Flashing
3.4.2 Counter Flashings
3.4.3 Through-Wall Flashing
3.4.3.1 Lintel Flashing
3.4.3.2 Sill Flashing
3.5 REGLETS
3.6 CONTRACTOR QUALITY CONTROL

-- End of Section Table of Contents --

SECTION 07600

SHEET METALWORK, GENERAL
10/94

PART 1 GENERAL

1.1 REFERENCES

The publications listed below form a part of this specification to the extent referenced. The publications are referred to in the text by basic designation only.

AMERICAN SOCIETY FOR TESTING AND MATERIALS (ASTM)

ASTM A 167	(1993) Stainless and Heat-Resisting Chromium-Nickel Steel Plate, Sheet, and Strip
ASTM B 32	(1993) Solder Metal
ASTM B 370	(1992) Copper Sheet and Strip for Building Construction
ASTM D 226	(1994) Asphalt-Saturated Organic Felt Used in Roofing and Waterproofing
ASTM D 543	(1987) Resistance of Plastics to Chemical Reagents
ASTM D 822	(1989) Conducting Tests on Paint and Related Coatings and Materials Using Filtered Open-Flame Carbon-Arc Light and Water Exposure Apparatus
ASTM D 828	(1993) Tensile Breaking Strength of Paper and Paperboard
ASTM D 1784	(1992) Rigid Poly(Vinyl Chloride) (PVC) Compounds and Chlorinated Poly(Vinyl Chloride) (CPVC) Compounds
ASTM D 2822	(1991) Asphalt Roof Cement
ASTM D 4022	(1994) Coal Roof Cement, Asbestos Containing
ASTM D 4586	(1993) Asphalt Roof Cement, Asbestos Free
ASTM E 96	(1994) Water Vapor Transmission of Materials

SHEET METAL AND AIR CONDITIONING CONTRACTORS NATIONAL ASSOCIATION (SMACNA)

SMACNA-02	(1993) Architectural Sheet Metal Manual

1.2 GENERAL REQUIREMENTS

Sheet metalwork shall be accomplished to form weathertight construction without waves, warps, buckles, fastening stresses or distortion, and shall allow for expansion and contraction.

1.2.1 Coordination

Cutting, fitting, drilling, and other operations in connection with sheet metal required to accommodate the work of other trades shall be performed by sheet metal mechanics. Application of bituminous strip flashing over various sheet metal items is covered in Section 07535 MODIFIED BITUMEN ROOFING. Installation of sheet metal items used in conjunction with roofing shall be coordinated with roofing work to permit continuous roofing operations.

1.3 SUBMITTALS

Government approval is required for submittals with a "GA" designation; submittals having an "FIO" designation are for information only. The following shall be submitted in accordance with Section 01300 SUBMITTAL PROCEDURES:

SD-04 Drawings

Materials; FIO.

Drawings of sheet metal items showing weights, gauges or thicknesses; types of materials; expansion-joint spacing; fabrication details; and installation procedures.

1.4 DELIVERY, STORAGE, AND HANDLING

Materials shall be adequately packaged and protected during shipment and shall be inspected for damage, dampness, and wet-storage stains upon delivery to the jobsite. Materials shall be clearly labeled as to type and manufacturer. Sheet metal items shall be carefully handled to avoid damage. Materials shall be stored in dry, ventilated areas until immediately before installation.

PART 2 PRODUCTS

2.1 MATERIALS

Lead, and lead-coated metal, shall not be used, except where shown. Any metal listed by SMACNA-02 for a particular item may be used, unless otherwise specified or indicated. Materials shall conform to the requirements specified below and to the thicknesses and configurations established in SMACNA-02. Different items need not be of the same metal, except that if copper is selected for any exposed item, all exposed items shall be copper.

2.1.1 Accessories

Accessories and other items essential to complete the sheet metal installation, though not specifically indicated or specified, shall be provided.

2.1.2 Bituminous Cement

Type I asphalt cement conforming to ASTM D 2822 or ASTM D 4586. For coal tar roofing; coal tar cement conforming to ASTM D 4022.

2.1.3 Silcone Sealant

Unless otherwise specified, sealant shall be an elastomeric weather resistant sealant as specified in Section 07920 JOINT SEALING.

2.1.4 Fasteners

Fasteners shall be compatible with the fastened material and shall be the type best suited for the application.

2.1.5 Felt

ASTM D 226, Type I.

2.1.6 Polyvinyl Chloride (PVC) Reglets

ASTM D 1784, Class 14333D, 0.075 inch minimum thickness.

2.1.7 Copper

ASTM B 370, Temper H 00.

2.1.8 Stainless Steel

ASTM A 167, Type 302 or 304; fully annealed, dead soft temper.

2.1.9 Steel Sheet, Zinc-Coated (Galvanized)

ASTM A 525.

2.1.9.1 Finish

Exposed exterior items of zinc-coated steel sheet shall have a baked-on, factory-applied color coating of polyvinylidene fluoride or other equivalent fluorocarbon coating applied after metal substrates have been cleaned and pretreated. Finish coating dry-film thickness shall be 0.8 to 1.3 mils and color shall be as selected by the Contracting Officer.

2.1.10 Solder

ASTM B 32, 95-5 tin-antimony.

2.1.11 Through-Wall Flashing

a. Nonreinforced, waterproof, impermeable extruded elastomeric single ply sheeting not less than 30 mils thick.

b. Three ounce copper sheet, with 2 mils of dense, clear, polyethylene sheet bonded to each side of the copper.

c. Other through-wall flashing material may be used provided the following performance criteria are met.

(1) No cracking or flaking when bent 180 degrees over a 1/32 inch mandrel and rebent at the same point over the same mandrel in an

opposite direction at 32 degrees F.

(2) Water vapor permeability not more than 2 perms when tested in accordance with ASTM E 96.

(3) Minimum breaking strength of 90 pounds per inch width in the weakest direction when tested in accordance with ASTM D 828.

(4) No visible deterioration after being subjected to a 400-hour direct weathering test in accordance with ASTM D 822.

(5) No shrinkage in length or width and less than 5 percent loss of breaking strength after a 10-day immersion, per ASTM D 543, in 5 percent (by weight) solutions, respectively, of sulfuric acid, hydrochloric acid, sodium hydroxide or saturated lime (calcium hydroxide).

2.1.12 Pitch Pans

Pitch pans shall be constructed of 22 gauge galvanized metal. Clearance of projection from side of pan shall be a minimum of 2 inches.

PART 3 EXECUTION

3.1 GENERAL

Accessory items shall be fabricated in conformance with SMACNA-02 and as indicated. Unless otherwise specified or indicated, exposed edges shall be folded back to form a 1/2 inch hem on the concealed side, and bottom edges of exposed vertical surfaces shall be angled to form drips. Bituminous cement shall not be placed in contact with roofing membranes other than modified bitumen roofing.

3.2 EXPANSION JOINTS

Expansion joints shall be provided as specified in SMACNA-02. Expansion joints in continuous sheet metal shall be provided at 40 foot intervals for copper and stainless steel and at 32 foot intervals for aluminum. Joints shall be evenly spaced. An additional joint shall be provided where the distance between the last expansion joint and the end of the continuous run is more than half the required interval spacing.

3.2.1 CONNECTIONS AND JOINTING

3.2.2 Soldering

Soldering shall apply to copper, and stainless steel items. Edges of sheet metal shall be pretinned before soldering is begun. Soldering shall be done slowly with well heated soldering irons so as to thoroughly heat the seams and completely sweat the solder through the full width of the seam. Edges of stainless steel to be pretinned shall be treated with soldering acid flux. Soldering shall follow immediately after application of the flux. Upon completion of soldering, the acid flux residue shall be thoroughly cleaned from the sheet metal with a water solution of washing soda and rinsed with clean water.

3.2.3 Riveting

Joints in aluminum sheets 0.040 inch or less in thickness shall be

mechanically made.

3.2.4 Seaming

Flat-lock and soldered-lap seams shall finish not less than 1 inch wide. Unsoldered plain-lap seams shall lap not less than 3 inches unless otherwise specified. Flat seams shall be made in the direction of the flow.

3.3 CLEATS

A continuous cleat shall be provided where indicated or specified to secure loose edges of the sheet metalwork. Butt joints of cleats shall be spaced approximately 1/8 inch apart. The cleat shall be fastened to supporting wood construction with nails evenly spaced not over 12 inches on centers. Where the fastening is to be made to concrete or masonry, screws shall be used and shall be driven in expansion shields set in concrete or masonry.

3.4 FLASHINGS

Flashings shall be installed at locations indicated and as specified below. Sealing shall be according to the flashing manufacturer's recommendations. Flashings shall be installed at intersections of roof with vertical surfaces and at projections through roof, except that flashing for heating and plumbing, including piping, roof, and floor drains, and for electrical conduit projections through roof or walls are specified in other sections. Except as otherwise indicated, counter flashings shall be provided over base flashings. Perforations in flashings made by masonry anchors shall be covered up by an application of bituminous plastic cement at the perforation. Flashing shall be installed on top of joint reinforcement. Flashing shall be formed to direct water to the outside of the system.

3.4.1 Base Flashing

Metal base flashing shall be coordinated with roofing work. Metal base flashing shall be set in plastic bituminous cement over the roofing membrane, nailed to nailing strip, and secured in place on the roof side with nails spaced not more than 3 inches on centers. Metal base flashing shall not be used on modified bitumen roofing.

3.4.2 Counter Flashings

Except as otherwise indicated, counter flashings shall be provided over base flashings. Counter flashing shall be installed as shown on the drawings and in accordance with SMACNA-02. Where bituminous base flashings are provided, the counter flashing shall extend down as close as practicable to the top of the cant strip. Counter flashing shall be factory formed to provide spring action against the base flashing.

3.4.3 Through-Wall Flashing

Through-wall flashing includes sill, lintel, and spandrel flashing. The flashing shall be laid with a layer of mortar above and below the flashing so that the total thickness of the two layers of the mortar and flashing are the same thickness as the regular mortar joints. Flashing shall not extend further into the masonry backup wall than the first mortar joint. Joints in flashing shall be lapped and sealed. Flashing shall be one piece for lintels and sills.

3.4.3.1 Lintel Flashing

Lintel flashing shall extend the full length of lintel. Flashing shall extend through the wall one masonry course above the lintels and shall be bent down over the vertical leg of the outer steel lintel angle not less than 2 inches, or shall be applied over top of masonry and precast concrete lintels. Bedjoints of lintels at control joints shall be underlaid with sheet metal bond breaker.

3.4.3.2 Sill Flashing

Sill flashing shall extend the full width of the sill and not less than 4 inches beyond ends of sill except at control joint where the flashing shall be terminated at the end of the sill.

3.5 REGLETS

Reglets shall be a factory fabricated product of proven design, complete with fittings and special shapes as required. Open-type reglets shall be filled with fiberboard or other suitable separator to prevent crushing of the slot during installation. Reglet plugs shall be spaced not over 12 inches on centers and reglet grooves shall be filled with silicone sealant. Friction or slot-type reglets shall have metal flashings inserted the full depth of slot and shall be lightly punched every 12 inches to crimp the reglet and counter flashing together.

3.6 CONTRACTOR QUALITY CONTROL

The Contractor shall establish and maintain a quality control procedure for sheet metal used in conjunction with roofing to assure compliance of the installed sheet metalwork with the contract requirements. Any work found not to be in compliance with the contract shall be promptly removed and replaced or corrected in an approved manner. Quality control shall include, but not be limited to, the following:

a. Observation of environmental conditions; number and skill level of sheet metal workers; condition of substrate.

b. Verification of compliance of materials before, during, and after installation.

c. Inspection of sheet metalwork for proper size and thickness, fastening and joining, and proper installation.

The actual quality control observations and inspections shall be documented and a copy of the documentation furnished to the Contracting Officer at the end of each day.

-- End of Section --

SECTION TABLE OF CONTENTS

DIVISION 07 - THERMAL & MOISTURE PROTECTION

SECTION 07920

JOINT SEALING

05/94

PART 1 GENERAL

1.1 REFERENCES
1.2 SUBMITTALS
1.3 ENVIRONMENTAL REQUIREMENTS
1.4 DELIVERY AND STORAGE

PART 2 PRODUCTS

2.1 BACKING
2.1.1 Rubber Backing
2.1.2 PVC Backing
2.1.3 Synthetic Rubber Backing
2.2 BOND-BREAKER
2.3 PRIMER
2.4 LATEX SEALANT
2.5 ELASTOMERIC SEALANTS
2.6 ACOUSTICAL SEALANT
2.7 PREFORMED SEALANT
2.8 SOLVENTS AND CLEANING AGENTS

PART 3 EXECUTION

3.1 GENERAL
3.1.1 Surface Preparation
3.1.2 Concrete and Masonry Surfaces
3.1.3 Steel Surfaces
3.1.4 Aluminum Surfaces
3.1.5 Wood Surfaces
3.2 APPLICATION
3.2.1 Masking Tape
3.2.2 Backing
3.2.3 Bond-Breaker
3.2.4 Primer
3.2.5 Sealant
3.3 CLEANING

-- End of Section Table of Contents --

SECTION 07920

JOINT SEALING
05/94

PART 1 GENERAL

1.1 REFERENCES

The publications listed below form a part of this specification to the extent referenced. The publications are referred to in the text by basic designation only.

AMERICAN SOCIETY FOR TESTING AND MATERIALS (ASTM)

ASTM C 509	(1994) Elastomeric Cellular Preformed Gasket and Sealing Material
ASTM C 734	(1993) Low-Temperature Flexibility of Latex Sealants After Artificial Weathering
ASTM C 834	(1991) Latex Sealants
ASTM C 920	(1987) Elastomeric Joint Sealants
ASTM D 217	(1994) Cone Penetration of Lubricating Grease
ASTM D 1056	(1991) Flexible Cellular Materials - Sponge or Expanded Rubber
ASTM D 1565	(1981; R 1990) Flexible Cellular Materials - Vinyl Chloride Polymers and Copolymers (Open-Cell Foam)
ASTM E 84	(1994a) Surface Burning Characteristics of Building Materials

1.2 SUBMITTALS

Government approval is required for submittals with a "GA" designation; submittals having an "FIO" designation are for information only. The following shall be submitted in accordance with Section 01300 SUBMITTAL PROCEDURES:

SD-01 Data

Backing; FIO.

Bond-Breaker; FIO.

Sealant; FIO.

Manufacturer's descriptive data including storage requirements, shelf life, curing time, instructions for mixing and application, and primer data (if required). A copy of the Material Safety Data Sheet shall be provided for each solvent, primer or sealant material.

SD-13 Certificates

Sealant; FIO.

Certificates of compliance stating that the materials conform to the specified requirements.

1.3 ENVIRONMENTAL REQUIREMENTS

The ambient temperature shall be within the limits of 40 to 90 degrees F when the sealants are applied.

1.4 DELIVERY AND STORAGE

Materials shall be delivered to the job in the manufacturer's original unopened containers. The container label or accompanying data sheet shall include the following information as applicable: manufacturer, name of material, formula or specification number, lot number, color, date of manufacture, mixing instructions, shelf life, and curing time at the standard conditions for laboratory tests. Materials shall be handled and stored to prevent inclusion of foreign materials. Materials shall be stored at temperatures between 40 and 90 degrees F unless otherwise specified by the manufacturer.

PART 2 PRODUCTS

2.1 BACKING

Backing shall be 25 to 33 percent oversize for closed cell and 40 to 50 percent oversize for open cell material, unless otherwise indicated.

2.1.1 Rubber Backing

Cellular rubber sponge backing shall be ASTM D 1056, Type 2, closed cell, Class A, round cross section, unless otherwise required for application.

2.1.2 PVC Backing

Polyvinyl chloride (PVC) backing shall be ASTM D 1565, Grade VO 12, open-cell foam, round cross section, unless otherwise required for application.

2.1.3 Synthetic Rubber Backing

Synthetic rubber backing shall be ASTM C 509, Option I, Type I preformed rods or tubes.

2.2 BOND-BREAKER

Bond-breaker shall be as recommended by the sealant manufacturer to prevent adhesion of the sealant to backing or to bottom of the joint.

2.3 PRIMER

Primer shall be non-staining type as recommended by sealant manufacturer for the application.

2.4 LATEX SEALANT

Latex Sealant, shall be ASTM C 834.

2.5 ELASTOMERIC SEALANTS

Elastomeric sealants shall conform to ASTM C 920 and the following:

a. Polyurethane Sealant: Polyurethane sealant, Grade NS or P as applicable, Class 12.5, Use T, NT, M, G, and A as required.

b. Silicone Sealant: Silicone sealant, Type S M, Grade NS or P as applicable, Class 12.5, Use NT, M, G, and A as required.

2.6 ACOUSTICAL SEALANT

Rubber or polymer-based acoustical sealant shall have a flame spread of 25 or less and a smoke developed rating of 50 or less when tested in accordance with ASTM E 84. Acoustical sealant shall have a consistency of 250 to 310 when tested in accordance with ASTM D 217, and shall remain flexible and adhesive after 500 hours of accelerated weathering as specified in ASTM C 734, and shall be non-staining.

2.7 PREFORMED SEALANT

Preformed sealant shall be polybutylene or isoprene-butylene based pressure sensitive weather resistant tape or bead sealant capable of sealing out moisture, air and dust when installed as recommended by the manufacturer. At temperatures from minus 30 to plus 160 degrees F, the sealant shall be non-bleeding and shall have no loss of adhesion.

2.8 SOLVENTS AND CLEANING AGENTS

Solvents, cleaning agents, and accessory materials shall be provided as recommended by the manufacturer.

PART 3 EXECUTION

3.1 GENERAL

3.1.1 Surface Preparation

The surfaces of joints to be sealed shall be dry. Oil, grease, dirt, chalk, particles of mortar, dust, loose rust, loose mill scale, and other foreign substances shall be removed from surfaces of joints to be in contact with the sealant. Oil and grease shall be removed with solvent and surfaces shall be wiped dry with clean cloths.

3.1.2 Concrete and Masonry Surfaces

Where surfaces have been treated with curing compounds, oil, or other such materials, the materials shall be removed by sandblasting or wire brushing. Laitance, efflorescence and loose mortar shall be removed from the joint cavity.

3.1.3 Steel Surfaces

Steel surfaces to be in contact with sealant shall be sandblasted or, if sandblasting would not be practical or would damage adjacent finish work, the metal shall be scraped and wire brushed to remove loose mill scale.

Protective coatings on steel surfaces shall be removed by sandblasting or by a solvent that leaves no residue.

3.1.4 Aluminum Surfaces

Aluminum surfaces to be in contact with sealants shall be cleaned of temporary protective coatings. When masking tape is used for a protective cover, the tape and any residual adhesive shall be removed just prior to applying the sealant. Solvents used to remove protective coating shall be as recommended by the manufacturer of the aluminum work and shall be non-staining.

3.1.5 Wood Surfaces

Wood surfaces to be in contact with sealants shall be free of splinters and sawdust or other loose particles.

3.2 APPLICATION

3.2.1 Masking Tape

Masking tape shall be placed on the finish surface on one or both sides of a joint cavity to protect adjacent finish surfaces from primer or sealant smears. Masking tape shall be removed within 10 minutes after joint has been filled and tooled.

3.2.2 Backing

Backing shall be installed to provide the indicated sealant depth. The installation tool shall be shaped to avoid puncturing the backing.

3.2.3 Bond-Breaker

Bond-breaker shall be applied to fully cover the bottom of the joint without contaminating the sides where sealant adhesion is required.

3.2.4 Primer

Primer shall be used on concrete masonry units, wood, or other porous surfaces in accordance with instructions furnished with the sealant. Primer shall be applied to the joint surfaces to be sealed. Surfaces adjacent to joints shall not be primed.

3.2.5 Sealant

Sealant shall be used before expiration of shelf life. Multi-component sealants shall be mixed according to manufacturer's printed instructions. Sealant in guns shall be applied with a nozzle of proper size to fit the width of joint. Joints shall be sealed as detailed in the drawings. Sealant shall be forced into joints with sufficient pressure to expel air and fill the groove solidly. Sealant shall be installed to the indicated depth without displacing the backing. Unless otherwise indicated, specified, or recommended by the manufacturer, the installed sealant shall be tooled so that the surface is uniformly smooth and free of wrinkles and to assure full adhesion to the sides of the joint. Sealants shall be installed free of air pockets, foreign embedded matter, ridges and sags. Sealer shall be applied over the sealant when and as specified by the sealant manufacturer.

3.3 CLEANING

The surfaces adjoining the sealed joints shall be cleaned of smears and other soiling resulting from the sealant application as work progresses.

-- End of Section --

SECTION TABLE OF CONTENTS

DIVISION 08 - DOORS & WINDOWS

SECTION 08110

STEEL DOORS AND FRAMES

02/95

PART 1 GENERAL

1.1 REFERENCES
1.2 SUBMITTALS
1.3 DELIVERY AND STORAGE
1.4 WARRANTY

PART 2 PRODUCTS

2.1 DOORS AND FRAMES
2.2 FIRE RATED DOORS
2.3 THERMAL INSULATED DOORS
2.4 WEATHERSTRIPPING
2.5 GLAZING
2.5.1 FACTORY FINISH

PART 3 EXECUTION

3.1 INSTALLATION
3.1.1 Thermal Insulated Doors
3.2 FIELD PAINTED FINISH

-- End of Section Table of Contents --

SECTION 08110

STEEL DOORS AND FRAMES
02/95

PART 1 GENERAL

1.1 REFERENCES

The publications listed below form a part of this specification to the extent referenced. The publications are referred to in the text by basic designation only.

AMERICAN SOCIETY FOR TESTING AND MATERIALS (ASTM)

ASTM C 236	(1989; R 1993) Steady-State Thermal Performance of Building Assemblies by Means of a Guarded Hot Box
ASTM C 976	(1990) Thermal Performance of Building Assemblies by Means of a Calibrated Hot Box
ASTM D 2863	(1991) Measuring the Minimum Oxygen Concentration to Support Candle-Like Combustion of Plastics (Oxygen Index)
ASTM E 152	(1981a) Fire Tests of Door Assemblies
ASTM E 283	(1991) Determining the Rate of Air Leakage Through Exterior Windows, Curtain Walls, and Doors Under Specified Pressure Differences Across the Specimen

DOOR AND HARDWARE INSTITUTE (DHI)

DHI-A115.IG Hardware	(1994) Installation Guide for Doors and

NATIONAL FIRE PROTECTION ASSOCIATION (NFPA)

NFPA 80	(1992) Fire Doors and Windows
NFPA 80A	(1993) Protection of Buildings from Exterior Fire Exposures
NFPA 101	(1994) Safety to Life from Fire in Buildings and Structures

STEEL DOOR INSTITUTE (SDOI)

SDOI SDI-100	(1991) Standard Steel Doors and Frames
SDOI SDI-106	(1991) Standard Door Type Nomenclature
SDOI SDI-107	(1984) Hardware on Steel Doors (Reinforcement - Application)

1.2 SUBMITTALS

Government approval is required for submittals with a "GA" designation; submittals having an "FIO" designation are for information only. The following shall be submitted in accordance with Section 01300 SUBMITTAL PROCEDURES:

SD-04 Drawings

Steel Doors and Frames; FIO.

Drawings using standard door type nomenclature in accordance with SDOI SDI-106 indicating the location of each door and frame, elevation of each model of door and frame, details of construction, method of assembling sections, location and extent of hardware reinforcement, hardware locations, type and location of anchors for frames, and thicknesses of metal. Drawings shall include catalog cuts or descriptive data for the doors, frames, and weatherstripping including air infiltration data and manufacturers printed instructions.

SD-09 Reports

Fire Rated Doors; FIO.

A letter by a nationally recognized testing laboratory which identifies the product manufacturer, type, and model; certifying that the laboratory has tested a sample assembly in accordance with ASTM E 152 and issued a current listing for same.

SD-13 Certificates

Fire Rated Doors; FIO. Thermal Insulated Doors; FIO.

a. Certification of Oversized Fire Doors: Certificates of compliance in accordance with the requirements of ASTM E 152 for fire doors exceeding the sizes for which label service is available.

b. Certification of Thermal Insulating Rating: Certification or test report for thermal insulated doors shall show compliance with the specified requirements. The certification, or test report, shall list the parameters and the type of hardware and perimeter seals used to achieve the rating.

1.3 DELIVERY AND STORAGE

During shipment, welded unit type frames shall be strapped together in pairs with heads at opposite ends or shall be provided with temporary steel spreaders at the bottom of each frame. Materials shall be delivered to the site in undamaged condition, and stored out of contact with the ground and under a weathertight covering permitting air circulation. Doors and assembled frames shall be stored in an upright position in accordance with DHI-A115.IG. Abraded, scarred, or rusty areas shall be cleaned and touched up with matching finishes.

1.4 WARRANTY

Manufacturer's standard performance guarantees or warranties that extend beyond a 1 year period shall be provided.

PART 2 PRODUCTS

2.1 DOORS AND FRAMES

Doors and frames shall be factory fabricated in accordance with SDOI SDI-100 and the additional requirements specified herein. Door grade shall be heavy duty (Grade II) unless otherwise indicated on the door and door frame schedules. Exterior doors and frames shall be designation G60 galvanized. Doors and frames shall be prepared to receive hardware conforming to the templates and information provided under Section 08700 BUILDERS' HARDWARE. Doors and frames shall be reinforced, drilled, and tapped to receive mortised hinges, locks, latches, and flush bolts as required. Doors and frames shall be reinforced for surface applied hardware. Frames shall be welded type. Door frames shall be furnished with a minimum of three jamb anchors and one floor anchor per jamb. Anchors shall be not less than 18 gauge steel or 7 gauge diameter wire. For wall conditions that do not allow the use of a floor anchor, an additional jamb anchor shall be provided. Rubber silencers shall be furnished for installation into factory predrilled holes in door frames; adhesively applied silencers are not acceptable. Where frames are installed in masonry walls, plaster guards shall be provided on door frames at hinges and strikes. Reinforcing of door assemblies for closers and other required hardware shall be in accordance with SDOI SDI-100 and the conditions of the fire door assembly listing when applicable. Exterior doors shall have top edges closed flush and sealed against water penetration.

2.2 FIRE RATED DOORS

Fire rated door assemblies shall bear the listing identification label of a nationally recognized testing laboratory qualified to perform tests of fire door assemblies in accordance with ASTM E 152 and having a listing for the tested assemblies. The fire resistance rating shall be as indicated on the Drawings. Doors exceeding the sizes for which listing label service is offered shall be in accordance with ASTM E 152. Listing identification labels shall be constructed and permanently applied by a method which results in their destruction should they be removed.

2.3 THERMAL INSULATED DOORS

The interior of thermal insulated doors shall be completely filled with rigid plastic foam permanently bonded to each face panel. The thermal conductance (U-value) through the door shall not exceed 0.41 btu/hr times sq f times f when tested as an operational assembly in accordance with ASTM C 236 or ASTM C 976. Doors with cellular plastic cores shall have a minimum oxygen index rating of 22 percent when tested in accordance with ASTM D 2863.

2.4 WEATHERSTRIPPING

Unless otherwise specified in Section 08700 BUILDERS' HARDWARE, weatherstripping shall be as follows: Weatherstripping for head and jamb shall be manufacturer's standard elastomeric type of synthetic rubber, vinyl, or neoprene and shall be installed at the factory or on the jobsite in accordance with the door frame manufacturer's recommendations. Weatherstripping for bottom of doors shall be as shown. Air leakage rate of weatherstripping shall not exceed 0.20 cfm per linear foot of crack when tested in accordance with ASTM E 283 at standard test conditions.

2.5 GLAZING

Glazing shall be as specified in Section 08810 GLASS AND GLAZING. Removable glazing beads shall be screw-on or snap-on type.

2.5.1 FACTORY FINISH

Doors and frames shall be phosphatized and primed with standard factory primer system.

PART 3 EXECUTION

3.1 INSTALLATION

Installation shall be in accordance with DHI-A115.IG. Preparation for surface applied hardware shall be in accordance with SDOI SDI-107. Rubber silencers shall be installed in door frames after finish painting has been completed; adhesively applied silencers are not acceptable. Weatherstripping shall be installed at exterior door openings to provide a weathertight installation. Installation and operational characteristics of fire doors shall be in accordance with NFPA 80, NFPA 80A and NFPA 101. Hollow metal door frames shall be solid grouted in masonry walls.

3.1.1 Thermal Insulated Doors

Hardware and perimeter seals shall be adjusted for proper operation. Doors shall be sealed weathertight after installation of hardware and shall be in accordance with Section 07920 JOINT SEALING.

3.2 FIELD PAINTED FINISH

Steel doors and frames shall be field painted in accordance with Section 09900 PAINTING, GENERAL. Weatherstrips shall be protected from paint. Finish shall be free of scratches or other blemishes. Color shall be as indicated on the Drawings.

-- End of Section --

SECTION TABLE OF CONTENTS

DIVISION 08 - DOORS & WINDOWS

SECTION 08120

ALUMINUM DOORS AND FRAMES

03/94

PART 1 GENERAL

1.1 REFERENCES
1.2 SYSTEM DESCRIPTION
1.3 PERFORMANCE REQUIREMENTS
1.3.1 Vertical Rail Rotational Performance
1.3.2 Wind Load Performance
1.4 SUBMITTALS
1.5 DELIVERY AND STORAGE
1.6 WARRANTY

PART 2 PRODUCTS

2.1 ALUMINUM DOORS AND FRAMES
2.1.1 Finishes
2.1.2 Welding and Fastening
2.1.3 Anchors
2.1.4 Provisions For Hardware
2.1.5 Provisions For Glazing
2.1.6 Weatherstripping
2.2 FABRICATION OF ALUMINUM FRAMES
2.3 FABRICATION OF ALUMINUM DOORS
2.3.1 Sizes, Clearances, and Edge Treatment
2.3.1.1 Full-Glazed Stile and Rail Doors

PART 3 EXECUTION

3.1 INSTALLATION OF DOORS, FRAMES, AND ACCESSORIES
3.1.1 Protection of Aluminum
3.1.1.1 Paint
3.1.1.2 Nonabsorptive Tape or Gasket
3.1.2 Installation

-- End of Section Table of Contents --

SECTION 08120

ALUMINUM DOORS AND FRAMES
03/94

PART 1 GENERAL

1.1 REFERENCES

The publications listed below form a part of this specification to the extent referenced. The publications are referred to in the text by basic designation only.

ALUMINUM ASSOCIATION (AA)

AA DAF-45	(1980) Designation System for Aluminum Finishes

AMERICAN SOCIETY FOR TESTING AND MATERIALS (ASTM)

ASTM B 209	(1992a) Aluminum and Aluminum-Alloy Sheet and Plate
ASTM B 221	(1992a) Aluminum and Aluminum-Alloy Extruded Bars, Rods, Wire, Shapes, and Tubes
ASTM E 283	(1991) Determining the Rate of Air Leakage Through Exterior Windows, Curtain Walls, and Doors Under Specified Pressure Differences Across the Specimen
ASTM E 330	(1990) Structural Performance of Exterior Windows, Curtain Walls, and Doors by Uniform Static Air Pressure Difference

1.2 SYSTEM DESCRIPTION

Swing-type aluminum doors and frames, of size and design shown on the drawings, shall be provided at the locations indicated. Doors shall be furnished complete with frames, subframes, transoms, adjoining sidelights, adjoining window wall, trim, and other accessories indicated and specified.

1.3 PERFORMANCE REQUIREMENTS

1.3.1 Vertical Rail Rotational Performance

Full-glazed doors, except doors with top and bottom rails fastened together with tensioned tie rods, shall pass the following test:

The test section shall consist of an assembly of the top corner of the door. The side-rail section shall be 24 inches long and the top-rail section shall be 12 inches long. The top-rail section of doors having tie rods extending between stiles shall have blocking at the section cut to provide anchorage for the tie rod. The top-rail section shall be anchored to the test bench so that the corner protrudes far enough to allow

clearance for deflection of the side rail. A lever arm capable of supporting 190 pounds shall be attached to the side-rail section at a point 19 inches from the inside edge of the top-rail. Position of the lever arm shall be parallel to the top-rail section. A weight support pad shall be attached to the lever arm at a point 19 inches from the inner edge of the side rail. The test section shall withstand a load of 130 pounds on the lever arm before reaching the point of failure. Failure is defined as a joint separation of 1/16 inch during test loading or a vertical rail rotational displacement of 3-1/2 degrees during test loading.

1.3.2 Wind Load Performance

Doors shall be of sufficient strength to withstand a design wind load of 30 pounds per square foot of supported area with a deflection of not more than 1/175 times the length of the member. Doors shall be tested in accordance with ASTM E 330 at a pressure not less than 1.5 times the design load.

1.4 SUBMITTALS

Government approval is required for submittals with a "GA" designation; submittals having an "FIO" designation are for information only. The following shall be submitted in accordance with Section 01300 SUBMITTAL PROCEDURES:

SD-01 Data

Aluminum Doors and Frames; FIO.

Manufacturer's descriptive data and catalog cuts including air-infiltration data.

SD-04 Drawings

Aluminum Doors and Frames; FIO.

A schedule showing the location of each door shall be included with the drawings. Drawings showing elevations of each door and frame type, details and method of anchorage, details of construction, location and installation of hardware, shape and thickness of materials, and details of joints and connections.

SD-06 Instructions

Installation; FIO. Cleaning; FIO.

Manufacturers installation instructions and cleaning instructions.

SD-09 Reports

Full-Glazed and Flush Doors; FIO.

For full-glazed doors, certified test reports stating that doors meet all test and specified requirements. Test shall be conducted by an independent testing laboratory within a period of 36 months preceding delivery of the doors to the site.

SD-14 Samples

Finishes; FIO.

Samples of the color anodized coating, showing the extreme color range.

1.5 DELIVERY AND STORAGE

Materials delivered to the jobsite shall be inspected for damage, and shall be unloaded with a minimum of handling. Storage shall be in a dry location with adequate ventilation, free from dust, water, and other contaminants, and which permits easy access for inspecting and handling. Materials shall be neatly stored on the floor, properly stacked on nonabsorptive strips or wood platforms. Doors and frames shall not be covered with tarps, polyethylene film, or similar coverings.

1.6 WARRANTY

Manufacturer's standard performance guarantees or warranties that extend beyond a one-year period shall be provided.

PART 2 PRODUCTS

2.1 ALUMINUM DOORS AND FRAMES

Extrusions shall comply with ASTM B 221, Alloy 6063-T5 except alloy used for anodized color coatings shall be required to produce the specified color. Aluminum sheets and strips shall comply with ASTM B 209, alloy and temper best suited for the purpose. Fasteners shall be hard aluminum or stainless steel.

2.1.1 Finishes

Finish shall be color anodized. Color anodized finish shall be AA-M10C22A42 or AA-M10C22A44 in accordance with the requirements of AA DAF-45. Color shall be dark bronze.

2.1.2 Welding and Fastening

Where possible, welds shall be located on unexposed surfaces. Welds required on exposed surfaces shall be smoothly dressed. Welding shall produce a uniform texture and color in the finished work, free of flux and spatter. Exposed screws or bolts will be permitted only at inconspicuous locations and shall have heads countersunk.

2.1.3 Anchors

Anchors shall be stainless steel or steel with a hot-dipped galvanized finish. Anchors of the sizes and shapes required shall be provided for securing aluminum frames to adjacent construction. Anchors shall be placed near top and bottom of each jamb and at intermediate points not more than 25 inches apart. Transom bars shall be anchored at ends, and mullions shall be anchored at head and sill. Where indicated on the drawings or required, vertical mullion reinforcement shall be of sufficient length to extend up to the overhead structural slab or framing and be securely attached thereto. The bottom of each frame shall be anchored to the rough floor construction with 3/32 inch thick stainless steel angle clips secured to the back of each jamb and to floor construction. Stainless steel bolts and expansion rivets shall be used for fastening clip anchors.

2.1.4 Provisions For Hardware

Hardware for aluminum doors is specified in Section 08700 BUILDERS' HARDWARE. Doors and frames shall be cut, reinforced, drilled, and tapped at the factory to receive template hardware. Reinforcement shall be provided in the core of doors as required to receive locks, door closers, and other hardware. Doors to receive surface applied hardware shall be reinforced as required.

2.1.5 Provisions For Glazing

Glazing shall be as specified in Section 08810 GLASS AND GLAZING. Metal glazing beads, vinyl inserts, and glazing gaskets shall be provided for securing glass. Glass stops shall be tamperproof on exterior side.

2.1.6 Weatherstripping

Weatherstripping shall be continuous silicone-treated wool pile type, or a type recommended by the door manufacturer, and shall be provided on head and jamb of exterior doors. Weatherstripping for bottom of doors shall be as shown. Weatherstripping shall be easily replaced without special tools, and shall be adjustable at meeting stiles of pairs of doors. Air leakage rate of weatherstripping shall not exceed 0.5 cubic feet per minute per lineal foot of crack when tested in accordance with ASTM E 283 at standard test conditions.

2.2 FABRICATION OF ALUMINUM FRAMES

Frames shall be single-glazed and double-glazed and shall have a minimum total average unit thermal resistance of R value 1.92. Frames shall be fabricated of extruded aluminum shapes to contours as shown on the drawings. Shapes shown are representations of design, function, and required profile. Dimensions shown are minimum. Shapes of equivalent design may be submitted, subject to approval of samples. Minimum metal wall thickness shall be 0.090 inch, except glazing beads, moldings, and trim shall be not less than 0.050 inch. Frames that are to receive glass shall have removable snap-on glass stops and glazing beads. Joints in frame members shall be milled to a hairline watertight fit, reinforced, and secured mechanically by steel clip arrangement or by screw spline attachment.

2.3 FABRICATION OF ALUMINUM DOORS

2.3.1 Sizes, Clearances, and Edge Treatment

Doors shall be not less than 1-3/4 inches thick. Clearances shall be 1/16 inch at hinge stiles, 1/8 inch at lock stiles and top rails, and 3/16 inch at floors and thresholds. Single-acting doors shall be beveled 1/8 inch at lock and meeting stile edges.

2.3.1.1 Full-Glazed Stile and Rail Doors

Doors shall have wide stiles and rails as shown, and shall be fabricated from extruded aluminum hollow seamless tubes or from a combination of open-shaped members interlocked or welded together. Doors shall be single-glazed and double-glazed and shall have a minimum total average unit thermal resistance of R Value 1.92. Top and bottom rail shall be fastened together by means of welding or by 3/8 inch diameter cadmium-plated tensioned steel tie rods. Extruded aluminum snap-in glazing beads shall be provided on interior side of doors. Extruded aluminum theft-proof snap-in glazing beads or fixed glazing beads shall be provided on exterior or

security side of doors. Glazing beads shall have vinyl insert glazing gaskets, designed to receive glass of thickness required. Glass is specified in Section 08810 GLASS AND GLAZING.

PART 3 EXECUTION

3.1 INSTALLATION OF DOORS, FRAMES, AND ACCESSORIES

3.1.1 Protection of Aluminum

Aluminum shall not be used where it will be in contact with copper or where it will contact water which flows over copper surfaces. Aluminum that will be in contact with wet or pressure-treated wood, mortar, concrete, masonry, or ferrous metals shall be protected against galvanic or corrosive action by one of the following methods.

3.1.1.1 Paint

Aluminum surfaces to be protected shall be solvent cleaned and given a coat of zinc-molybdate primer and one coat of aluminum paint.

3.1.1.2 Nonabsorptive Tape or Gasket

Nonabsorptive tape or gasket shall be placed between the adjoining surfaces and shall be cemented to the aluminum surface using a cement compatible with aluminum.

3.1.2 Installation

Frames and framing members shall be accurately set in position to receive doors, transoms, and adjoining sidelights. Frames shall be plumb, square, level, and in alignment, and securely anchored to adjacent construction. Metal-to-metal joints between framing members shall be sealed as specified in Section 07920 CAULKING AND SEALANTS. Doors shall be accurately hung with proper clearances, and adjusted to operate properly. Protective coverings if provided shall be removed and the doors and frames shall be thoroughly cleaned.

-- End of Section --

SECTION TABLE OF CONTENTS

DIVISION 08 - DOORS & WINDOWS

SECTION 08201

WOOD DOORS

10/94

PART 1 GENERAL

1.1 REFERENCES
1.2 GENERAL REQUIREMENTS
1.2.1 Standard Products
1.2.2 Marking
1.3 SUBMITTALS
1.4 STORAGE
1.5 HARDWARE
1.6 GLAZING
1.7 WARRANTY

PART 2 PRODUCTS

2.1 GENERAL FABRICATION REQUIREMENTS
2.1.1 Edge Sealing
2.1.2 Adhesives
2.1.3 Prefitting
2.2 FLUSH DOORS
2.2.1 Core Construction
2.2.1.1 Solid Cores
2.2.2 Face Panels
2.2.2.1 Natural Finished Wood Veneer Doors
2.3 FIRE RATED DOORS
2.3.1 Reinforcement Blocking
2.3.2 Stile Edges
2.4 MOULDING AND EDGING

PART 3 EXECUTION

3.1 INSTALLATION OF DOORS
3.1.1 General Use Doors
3.1.2 Fire Doors
3.2 FIELD FINISHING

-- End of Section Table of Contents --

SECTION 08201

WOOD DOORS
10/94

PART 1 GENERAL

1.1 REFERENCES

The publications listed below form a part of this specification to the extent referenced. The publications are referred to in the text by basic designation only.

AMERICAN SOCIETY FOR TESTING AND MATERIALS (ASTM)

ASTM E 152	(1981a) Fire Tests of Door Assemblies

NATIONAL FIRE PROTECTION ASSOCIATION (NFPA)

NFPA 80	(1992) Fire Doors and Windows
NFPA 101	(1994) Safety to Life from Fire in Buildings and Structures

NATIONAL WOOD WINDOW & DOOR ASSOCIATION (NWWDA)

NWWDA I.S. 1-A	(1993) Architectural Wood Flush Doors

1.2 GENERAL REQUIREMENTS

1.2.1 Standard Products

Doors shall be of the type, size, and design indicated on the drawings, and shall be the standard products of manufacturers regularly engaged in the manufacture of wood doors.

1.2.2 Marking

Each door shall bear a stamp, brand, or other identifying mark indicating quality and construction of the door. The identifying mark or a separate certification shall include identification of the standard on which construction of the door is based, identity of the manufacturing plant, identification of the standard under which preservative treatment, if used, was made, and identification of the doors having a Type I glue bond.

1.3 SUBMITTALS

Government approval is required for submittals with a "GA" designation; submittals having an "FIO" designation are for information only. The following shall be submitted in accordance with Section 01300 SUBMITTAL PROCEDURES:

SD-04 Drawings

Wood Doors; FIO.

Drawings indicating the location of each door, elevation of each type of door, details of construction, marks to be used to identify the doors, and location and extent of hardware blocking. Drawings shall include catalog cuts or descriptive data for doors, weatherstripping, and thresholds to be used.

SD-06 Instructions

Fire Doors; FIO.

Manufacturers preprinted installation and touch-up instructions.

SD-13 Certificates

Fire Rated Doors; FIO.

Certificates for oversize fire doors stating that the doors are identical in design, materials, and construction to a door that has been tested and meets the requirements for the class indicated.

SD-14 Samples

Wood Veneer; FIO.

Samples of factory applied wood veneer.

1.4 STORAGE

Doors shall be stored in fully covered areas and protected from damage and from extremes in temperature and humidity. Doors shall be stored on supports to prevent warping or twisting, and to provide ventilation. Factory cartons or wrappers shall be kept intact until installation.

1.5 HARDWARE

Hardware, including weatherstripping and thresholds, is specified in Section 08700 BUILDERS' HARDWARE.

1.6 GLAZING

Glazing is specified in Section 08810 GLASS AND GLAZING.

1.7 WARRANTY

Manufacturer's standard performance guarantees or warranties that extend beyond a 1 year period shall be provided.

PART 2 PRODUCTS

2.1 GENERAL FABRICATION REQUIREMENTS

2.1.1 Edge Sealing

Wood end-grain exposed at edges of doors shall be sealed prior to shipment.

2.1.2 Adhesives

Adhesives shall be in accordance with NWWDA I.S. 1-A, requirements for Type II Bond Doors (water-repellent) for interior doors. Adhesive for doors to

receive a transparent finish shall be nonstaining.

2.1.3 Prefitting

Doors shall be furnished prefitted or unfitted at the option of the Contractor.

2.2 FLUSH DOORS

Flush doors shall be solid core and shall conform to NWWDA I.S. 1-A, except for the one year acclimazation requirement in paragraph T-2, which shall not apply. Wood doors shall be 5-ply construction with faces, stiles, and rails bonded to the cores.

2.2.1 Core Construction

2.2.1.1 Solid Cores

Door construction shall be glued wood block core or particle board core with vertical and horizontal edges bonded to the core. Blocking and hardware reinforcements for particle board core doors shall be in accordance with NWWDA I.S. 1-A.

2.2.2 Face Panels

2.2.2.1 Natural Finished Wood Veneer Doors

Veneer doors to receive natural finish shall be Premium Grade, book matched in accordance with NWWDA I.S. 1-A. Vertical stile strips shall be selected to provide edges of the same species and/or color as the face veneer. Door veneer shall be of species and cut as requried to match existing. Door finish shall be in accordance with paragraph FIELD FINISHING.

2.3 FIRE RATED DOORS

Fire rated door assemblies shall bear the listing identification label of a nationally recognized testing laboratory qualified to perform tests of fire door assemblies in accordance with ASTM E 152 and having a listing for the tested assemblies. The specific time interval rating on the labels shall be as indicated on the Drawings. Door assemblies shall be in accordance with NFPA 80. Listing identification on labels shall be constructed and permanently applied by a method which results in their destruction should they be removed. Fire rated doors shall be mineral core or staved lumber core, with rating as indicated on the Drawings.

2.3.1 Reinforcement Blocking

Fire rated doors shall be provided, as required, with hardware reinforcement blocking, and top, bottom, and intermediate rail blocking. Lock blocks shall be manufacturer's standard. Reinforcement blocking shall be in compliance with the manufacturer's labeling requirements. Reinforcement blocking shall not be of mineral material.

2.3.2 Stile Edges

Composite fire rated doors shall be provided with vertical stile edges that do not contain fire retardant salts. Vertical stiles shall be of the same species and/or color as the face veneer.

2.4 MOULDING AND EDGING

Moulding and edging shall be as shown. Wood species for transparent finished doors shall be compatible with veneer.

PART 3 EXECUTION

3.1 INSTALLATION OF DOORS

3.1.1 General Use Doors

Doors shall be fit, hung, and trimmed as required. Door shall have a clearance of 1/8 inch at the sides and top and shall have a bottom clearance of 1/4 inch over thresholds and 1/2 inch at other locations unless otherwise shown. The lock edge or both edges of doors shall be beveled at the rate of 1/8 inch in 2 inches. Cuts made on the job shall be sealed immediately after cutting, using a clear varnish or sealer. Bottom of doors shall be undercut to allow clear door swing over carpeted areas. Vertical edges of doors which have not been rounded or beveled at the factory shall be eased when the doors are installed.

3.1.2 Fire Doors

Installation, hardware, and operational characteristics shall conform to NFPA 80 and NFPA 101 and shall be in strict conformance with the manufacturer's printed instructions. Properly sized pilot holes shall be drilled for screws in door edges. Factory applied labels shall remain intact where installed. Labeled hinge stile edge and top edge of door shall not be trimmed. Lockstile edge and bottom edge may be trimmed only to the extent recommended by the door manufacturer.

3.2 FIELD FINISHING

Doors to receive field finishing, whether paint or natural finish, shall be factory primed or sealed, as required, and then shall be finished in accordance with Section 09900 PAINTING, GENERAL. Factory applied sealer shall not prevent doors from accepting field stain and finish. Color shall be as selected by the Contracting Officer. Field touch-up of factory finishes shall be in accordance with manufacturers instructions.

-- End of Section --

SECTION TABLE OF CONTENTS

DIVISION 08 - DOORS & WINDOWS

SECTION 08353

OPERABLE PARTITIONS

05/95

PART 1 GENERAL

1.1 REFERENCES
1.2 SUBMITTALS
1.3 DELIVERY AND STORAGE
1.4 WARRANTY

PART 2 PRODUCTS

2.1 MATERIALS
2.1.1 Vinyl Covering
2.1.2 Hardware
2.1.3 Sweep Strips
2.1.4 Track
2.1.5 Metal Soffit
2.2 OPERABLE PARTITIONS
2.3 COLOR

PART 3 EXECUTION

3.1 INSTALLATION

-- End of Section Table of Contents --

SECTION 08353

OPERABLE PARTITIONS
05/95

PART 1 GENERAL

1.1 REFERENCES

The publications listed below form a part of this specification to the extent referenced. The publications are referred to in the text by basic designation only.

AMERICAN SOCIETY FOR TESTING AND MATERIALS (ASTM)

ASTM E 84	(1994) Surface Burning Characteristics of Building Materials
ASTM E 90	(1990) Laboratory Measurement of Airborne Sound Transmission Loss of Building Partitions
ASTM E 413	(1987; R 1994) Rating Sound Insulation

FEDERAL SPECIFICATIONS (FS)

FS CCC-W-408	(Rev D) Wall Covering, Vinyl-Coated

1.2 SUBMITTALS

Government approval is required for submittals with a "GA" designation; submittals having an "FIO" designation are for information only. The following shall be submitted in accordance with Section 01300 SUBMITTAL PROCEDURES:

SD-01 Data

Operable Partitions; FIO.

Manufacturer's descriptive data, performance charts, catalog cuts, and installation instructions.

SD-04 Drawings

Operable Partitions; FIO.

Drawings containing complete schematic diagrams and details required to demonstrate that the system has been coordinated and will properly function as a unit. Drawings shall show proposed layout and anchorage of equipment and appurtenances, and equipment relationship to other parts of the work including clearances for maintenance and operation.

SD-13 Certificates

Materials; FIO. Operable Partitions; FIO.

Certificate attesting that the materials meet the requirements specified and that partitions have specified acoustical and flame retardant properties, as determined by test.

SD-14 Samples

Operable Partitions; FIO.

Manufacturer's standard color samples of specified surfaces and finishes.

SD-19 Operation and Maintenance Manuals

Operable Partitions; FIO.

Six complete copies of operating instructions. The instructions shall include the manufacturer's name, model number, service manual, parts list, and brief description of all equipment and operating features. Data shall include a complete list of parts and supplies, with current unit prices and source of supply, and a list of the parts recommended by the manufacturer to be replaced after 3 years of service.

Six complete copies of maintenance instructions explaining routine maintenance procedures including inspection, adjustments, lubrication, and cleaning. The instructions shall list possible breakdown, methods of repair, and a troubleshooting guide.

1.3 DELIVERY AND STORAGE

Materials shall be delivered to the jobsite in the manufacturer's original, unopened packages and shall be stored with protection from the weather, humidity and temperature variations, dirt and dust, or other contaminants.

1.4 WARRANTY

Manufacturer's standard performance guarantees or warranties that extend beyond a 1 year period shall be provided.

PART 2 PRODUCTS

2.1 MATERIALS

Material and equipment shall be the standard products of a manufacturer regularly engaged in the manufacture of such products and shall essentially duplicate items that have been in satisfactory use for at least 2 years prior to bid opening. Equipment shall be supported by a service organization that is, in the opinion of the Contracting Officer, reasonably convenient to the site. Door and partition finishes shall have a Class A rating when tested in accordance with ASTM E 84.

2.1.1 Vinyl Covering

The vinyl coated fabric shall conform to FS CCC-W-408, Type II (Medium duty). Covering shall have textured design.

2.1.2 Hardware

Operable partitions shall have manufacturers standard hardware. Hardware shall be anodized aluminum with a natural finish, chrome plated or brass plated metal, or painted finish.

2.1.3 Sweep Strips

Sweep strips shall be vinyl or other material which will not crack or craze with severe usage. Sweep strip shall control STC to the specified rating.

2.1.4 Track

Track shall be recessed and shall be of extruded aluminum or enamel finish steel. Provide track extensions for closure as indicated on the Drawings. Track shall be manufacturer's standard product designed for the weight of door or partition furnished. Track sections shall be provided in the maximum lengths practicable, not less than 6 feet long except for narrow doors and at ends of runs where short length is required. Suitable joint devices such as interlocking keys shall be provided at each joint to provide permanent alignment of track.

2.1.5 Metal Soffit

Soffit shall be provided when steel track is recessed. Soffit shall be of metal of adequate thickness to protect the ceiling from damage by door operation and shall be provided with the door manufacturer's standard neutral-color applied finish. Soffit on aluminum track shall be an integral part of the track.

2.2 OPERABLE PARTITIONS

Operable partitions shall consist of top hung ball bearing carriers which support single modular panels. Panels shall be not more than 4 feet wide, except for end closure panels, and shall be full height to track. Panels shall have a protective edge which fully surrounds and protects the edges of the surface material or surface material which wraps around the vertical panel edges without vertical trim. Panels shall be constructed of minimum 16 gauge thick steel frames with minimum 22 gauge thick face panels spot welded to the frame. Panel thickness and composition shall be designed to provide an STC rating of not less than 38 in accordance with ASTM E 90 and ASTM E 413. Doors shall have vinyl sweep top seals which compress against the bottom of the top track. Bottom seals shall be a vinyl sweep mechanical seal which will expand in place or panels which will be lowered by self-contained operating device. Panels shall lock in place to form a stable, rigid partition. Panels shall be surfaced with vinyl covering. Partition finish shall have a flame spread rating of not more than 25 in accordance with ASTM E 84. Doors shall be non fire rated manually operated.

2.3 COLOR

Color and pattern shall be as indicted on the Drawings.

PART 3 EXECUTION

3.1 INSTALLATION

Installation shall be in accordance with the manufacturer's approved installation instructions.

-- End of Section --

SECTION TABLE OF CONTENTS

DIVISION 08 - DOORS & WINDOWS

SECTION 08700

BUILDERS' HARDWARE

10/91

PART 1 GENERAL

1.1 REFERENCES
1.2 SUBMITTALS
1.3 DELIVERY, STORAGE, AND HANDLING
1.4 SPECIAL TOOLS

PART 2 PRODUCTS

2.1 GENERAL HARDWARE REQUIREMENTS
2.2 TEMPLATES
2.3 HINGES
2.4 LOCKS AND LATCHES
2.4.1 Mortise Lock and Latchsets
2.4.2 Lock Cylinders (Mortise and Rim)
2.4.3 Lock Trim
2.5 EXIT DEVICES AND EXIT DEVICE ACCESSORIES
2.5.1 Exit Devices and Auxiliary Items
2.6 KEYING
2.7 DOOR CLOSING DEVICES
2.7.1 Surface Type Closers
2.8 SMOKE DETECTORS AND MAGNETIC HOLDERS
2.9 ARCHITECTURAL DOOR TRIM
2.9.1 Door Protection Plates
2.9.1.1 Kick Plates
2.9.2 Push Plates
2.9.2.1 Combination Push-Pull Plates
2.9.3 Door Pulls and Push/Pull Units
2.9.3.1 Arm Pulls
2.9.4 Push and Pull Bars
2.10 AUXILIARY HARDWARE
2.10.1 Wall Mounted Door Stops
2.11 MISCELLANEOUS
2.11.1 Metal Thresholds
2.11.2 Aluminum Housed Type Weatherseals
2.11.3 Gasketing
2.12 FASTENINGS
2.13 FINISHES
2.14 HARDWARE FOR FIRE DOORS

PART 3 EXECUTION

3.1 APPLICATION
3.1.1 Hardware for Fire Doors and Smoke-Control Door Assemblies
3.1.2 Door-Closing Devices
3.1.3 Kick Plates and Mop Plates

3.1.4 Auxiliary Hardware
3.1.5 Thresholds
3.1.6 Weatherseals
3.1.7 Gasketing
3.2 OPERATIONAL TESTS
3.3 HARDWARE SETS

-- End of Section Table of Contents --

SECTION 08700

BUILDERS' HARDWARE
10/91

PART 1 GENERAL

1.1 REFERENCES

The publications listed below form a part of this specification to the extent referenced. The publications are referred to in the text by basic designation only.

AMERICAN SOCIETY FOR TESTING AND MATERIALS (ASTM)

ASTM E 283	(1991) Determining the Rate of Air Leakage Through Exterior Windows, Curtain Walls and Doors Under Specified Pressure Differences Across the Specimen

BUILDERS HARDWARE MANUFACTURERS ASSOCIATION (BHMA)

BHMA-01	(Effective thru Jun 1994) Directory of Certified Locks & Latches
BHMA-02	(Effective thru Jul 1994) Directory of Certified Door Closers
BHMA A156.1	(1988) Butts and Hinges
BHMA A156.2	(1989) Bored and Preassembled Locks and Latches
BHMA A156.3	(1994) Exit Devices
BHMA A156.4	(1992) Door Controls - Closers
BHMA A156.5	(1992) Auxiliary Locks & Associated Products
BHMA A156.6	(1986) Architectural Door Trim
BHMA A156.7	(1994) Template Hinge Dimensions
BHMA A156.13	(1994) Mortise Locks & Latches
BHMA A156.15	(1986) Closer Holder Release Devices
BHMA A156.16	(1989) Auxiliary Hardware
BHMA A156.18	(1993) Materials and Finishes
BHMA A156.21	(1989) Thresholds

DOOR AND HARDWARE INSTITUTE (DHI)

DHI-02	(1986) Installation Guide for Doors and Hardware
DHI-03	(1989) Keying Systems and Nomenclature
DHI-04	(1976) Recommended Locations for Builders' Hardware for Custom Steel Doors and Frames
DHI-05	(1990) Recommended Locations for Architectural Hardware for Standard Steel Doors and Frames
DHI A115-W	(1993) Wood Door Hardware Standards (Incl A115-W1 thru A115-W9)

FEDERAL STANDARDS (FED-STD)

FED-STD 795	(Basic) Uniform Federal Accessibility Standards

NATIONAL FIRE PROTECTION ASSOCIATION (NFPA)

NFPA 80	(1995) Fire Doors and Windows
NFPA 101	(1994) Safety to Life from Fire in Buildings and Structures
NFPA 105	(1993) Smoke-Control Door Assemblies

1.2 SUBMITTALS

Government approval is required for submittals with a "GA" designation; submittals having an "FIO" designation are for information only. The following shall be submitted in accordance with Section 01300 SUBMITTAL PROCEDURES:

SD-01 Data

Hardware and Accessories; FIO.

Manufacturer's descriptive data, technical literature, catalog cuts, and installation instructions. Spare parts data for locksets, exit devices, closers, electric locks, electric strikes, electro-magnetic closer holder release devices, and electric exit devices, after approval of the detail drawings, and not later than 3 month(s) prior to the date of beneficial occupancy. The data shall include a complete list of parts and supplies, with current unit prices and source of supply.

SD-04 Drawings

Hardware Devices; GA.

Detail drawings for hardware devices for computerized keying systems, magnetic cards, and keyless push button access control systems showing complete wiring and schematic diagrams and other details required to demonstrate proper function of units.

SD-07 Schedules

Hardware Schedule; FIO.

Hardware schedule listing all items to be furnished. The schedule shall include for each item: the quantities; manufacturer's name and catalog numbers; sizes; detail information or catalog cuts; finishes; door and frame size and materials; location and hardware set identification cross-references to drawings; corresponding reference standard type number or function number from manufacturer's catalog if not covered by ANSI or BHMA; and list of abbreviations and template numbers.

Keying Schedule; GA.

Keying schedule developed in accordance with DHI-03, after the keying meeting with the user.

SD-13 Certificates

Hardware and Accessories; FIO.

The material supplier's or hardware manufacturer's certificates of compliance stating that the supplied material or hardware item meets specified requirements. Each certificate shall be signed by an official authorized to certify in behalf of material supplier or product manufacturer and shall identify quantity and date or dates of shipment or delivery to which the certificates apply. A statement that the proposed hardware items appear in BHMA-01 and BHMA-02 directories of certified products may be submitted in lieu of certificates. A separate Certificate of Compliance attesting that hardware items conform to the "Buy American Act" shall be included.

SD-19 Operation and Maintenance Manuals

Hardware and Accessories; FIO.

Six complete copies of maintenance instructions listing routine maintenance procedures, possible breakdowns and repairs, and troubleshooting guides. The instructions for electric locks, electric strikes, electro-magnetic closer holder release devices, and electric exit devices shall include simplified diagrams as installed.

1.3 DELIVERY, STORAGE, AND HANDLING

Hardware shall be delivered to the project site in the manufacturer's original packages. Each article of hardware shall be individually packaged in the manufacturer's standard commercial carton or container, and shall be properly marked or labeled to be readily identifiable with the approved hardware schedule. Each change key shall be tagged or otherwise identified with the door for which its cylinder is intended. Where double cylinder functions are used or where it is not obvious which is the key side of a door, appropriate instructions shall be included with the lock and on the hardware schedule. Manufacturer's printed installation instructions, fasteners, and special tools shall be included in each package.

1.4 SPECIAL TOOLS

Special tools, such as those supplied by the manufacturer, unique wrenches, and dogging keys, shall be provided as required to adjust hardware items.

PART 2 PRODUCTS

2.1 GENERAL HARDWARE REQUIREMENTS

Hardware shall conform to the requirements specified herein and the HARDWARE SETS listing at the end of this section. Hardware set numbers correspond to the set numbers shown on the drawings. Hardware items providing accessibility and usability for physically handicapped shall comply with FED-STD 795

2.2 TEMPLATES

Requirements for hardware to be mounted on metal doors or metal frames shall be coordinated between hardware manufacturer and door or frame manufacturer by use of templates and other information to establish location, reinforcement required, size of holes, and similar details. Templates of hinges shall conform to BHMA A156.7.

2.3 HINGES

Hinges shall conform to BHMA A156.1. Hinges used on metal doors and frames shall also conform to BHMA A156.7. Except as otherwise specified, hinge sizes shall conform to the hinge manufacturer's printed recommendations.

2.4 LOCKS AND LATCHES

To the maximum extent possible, locksets, latchsets and deadlocks shall be the products of a single manufacturer. Lock fronts for double-acting doors shall be rounded. Strikes for wood frames and pairs of wood doors shall be furnished with wrought boxes. Lock and latch set trim shall be lever handles only with escutcheons and shall be of a simple design in accordance with manufacturer's standard practice. All mechanical rooms, electrical closets, hazardous rooms, etc. shall have knurling on outside lever only.

2.4.1 Mortise Lock and Latchsets

Mortise lock, latchsets, and strikes shall be series 1000 and shall conform to BHMA A156.13, operational Grade 1. Mortise type locks and latches for doors 1-3/4 inches thick and over shall have adjustable bevel fronts or otherwise conform to the shape of the door.

2.4.2 Lock Cylinders (Mortise and Rim)

Lock cylinders shall comply with BHMA A156.5. Lock cylinder shall have not less than six pins. The existing locks were manufactured by Yale and have interchangeable cores. An "or equal" manufacturers locking system is acceptable. To be considered "equal" the new locks shall have cores that are compatible with the existing Yale keying system, which is Yale VYZ Series with six-pin tumbler removable core locks. All locks shall be furnished with key removable core cylinders. Keys and permanent cores shall be shipped directly to office of the Civil Engineer, (DEED, DEEM as applicable) Hill AFB, Ogden, UT. A construction master keying system shall be provided. Disassembly of lockset shall not be required to remove core from lockset. All locksets, lockable exit devices, and padlocks shall accept same interchangeable cores.

2.4.3 Lock Trim

Lock trim shall be forged or heavy wrought construction of commercial plain design. In addition to meeting the test requirement of BHMA A156.2 or BHMA

A156.13, lever handles and escutcheons shall be 0.050 inch thick, if unreinforced. If reinforced, the outer shell shall be 0.035 inch thick and the combined thickness shall be 0.070 inch except that lever shanks shall be 0.060 inch thick.

2.5 EXIT DEVICES AND EXIT DEVICE ACCESSORIES

Exit devices and exit device accessories shall conform to BHMA A156.3, Grade 1.

2.5.1 Exit Devices and Auxiliary Items

Trim shall be of wrought construction and commercial plain design with straight, beveled, or smoothly rounded sides, corners, and edges. Adjustable strikes shall be provided for rim type and vertical rod devices. Open back strikes shall be provided for pairs of doors with mortise and vertical rod devices; except open back strikes shall be used on labeled doors only where specifically provided for in the published listings. Touch bars shall be provided in lieu of conventional crossbars and arms. Escutcheons shall be provided not less than 7 by 2-1/4 inches. Escutcheons shall be cut to suit cylinders and operating trim.

2.6 KEYING

Locks shall be master keyed in sets or subsets as determined by the user after an initial key scheduling meeting with the user. Locks shall be furnished with manufacturer's standard construction key system for temporary use until permanent lock cores are installed.

Locks:	2 change keys each lock.
Master keyed sets:	4 keys each set.
Grand master keys:	4 total.
Construction keys:	4 total.

The keys shall be furnished to the Contracting Officer arranged in a container in sets or subsets as scheduled.

2.7 DOOR CLOSING DEVICES

Door closing devices shall conform to BHMA A156.4, Grade 1. Closing devices shall be products of one manufacturer for each type specified.

2.7.1 Surface Type Closers

Surface type closers shall be Grade 1, Series C02000 Standard Cover with back check position valve. Except as otherwise specified, sizes shall conform to the manufacturer's published recommendations. Closers for outswinging exterior doors shall have parallel arms or shall be top jamb mounted. Closers for doors close to a wall shall be of narrow projection so as not to strike the wall at the 90-degree open position.

2.8 SMOKE DETECTORS AND MAGNETIC HOLDERS

Smoke detectors and magnetic holders shall conform to Section 16721 FIRE DETECTION AND ALARM SYSTEM and BHMA A156.15. Door closers with integral holders connected to a separate detection device, or closers with integral holders and detector units sensing particles of combustion, which when activated will release the holder mechanism causing the closer to close the door, may be used in lieu of separate closers, detectors and magnetic

holders. Alternate closers shall provide the same function as closers specified and shall be listed or labeled by a nationally recognized independent testing laboratory.

2.9 ARCHITECTURAL DOOR TRIM

Architectural door trim shall conform to BHMA A156.6.

2.9.1 Door Protection Plates

2.9.1.1 Kick Plates

Kick plates shall be Acrovyn (color 934/Pearl). Width of plates shall be 2 inches less than door width for single doors and 1 inch less for pairs of doors. Height shall be 16 inches, except where the bottom rail is less than 16 inches the plate shall extend to within 1/2 inch of the panel mold or glass bead. Edges of metal plates shall be beveled.

2.9.2 Push Plates

2.9.2.1 Combination Push-Pull Plates

Combination push-pull plates shall be Category J300, 0.050 inch thick stainless steel beveled four edges.

2.9.3 Door Pulls and Push/Pull Units

2.9.3.1 Arm Pulls

Arm pulls shall be Category J400, double base, stainless steel.

2.9.4 Push and Pull Bars

Push and pull bars shall be Category J500, stainless steel. Edges of mounting plates shall be beveled.

2.10 AUXILIARY HARDWARE

Auxiliary hardware, consisting of door stops shall conform to BHMA A156.16. Lever extension flush bolts shall be Type L14081. Dust-proof strikes shall be Type L04011 for doors that are not fire rated. Dust-proof strikes shall be Type L04021 for fire rated doors. Other auxiliary hardware of the types listed below, shall conform to BHMA A156.16.

2.10.1 Wall Mounted Door Stops

Back plates are required behind wall mounted door stops, as a reinforcement to gypsum wallboard construction.

2.11 MISCELLANEOUS

2.11.1 Metal Thresholds

Thresholds shall conform to BHMA A156.21. Thresholds for exterior doors shall be extruded aluminum of the type indicated and shall provide proper clearance and an effective seal with specified weather stripping. Where required, thresholds shall be modified to receive projecting bolts of flush bolts. Thresholds for doors accessible to the handicapped shall be beveled with slopes not exceeding 1:2 and with heights not exceeding 1/2 inch.

Air leakage rate of weatherstripping shall not exceed 0.5 cubic feet per minute per lineal foot of crack when tested in accordance with ASTM E 283 at standard test conditions.

2.11.2 Aluminum Housed Type Weatherseals

Weatherseals of the type indicated shall consist of extruded aluminum retainers not less than 0.07 inch wall thickness with vinyl, neoprene, silicone rubber, polyurethane or vinyl brush inserts. Aluminum shall be clear (natural) bronze anodized. Weatherseal material shall be of an industrial/commercial grade. Seals shall remain functional through all weather and temperature conditions. Air leakage rate of weatherstripping shall not exceed 0.5 cubic feet per minute per lineal foot of crack when tested in accordance with ASTM E 283 at standard test conditions.

2.11.3 Gasketing

Gasketing shall be a compression type seal, silicon based, self-adhesive product for use on steel door frames with wood or steel doors for label as indicated on the Drawings. Color shall be white. Air leakage rate of weatherstripping shall not exceed 0.5 cubic feet per minute per lineal foot of crack when tested in accordance with ASTM E 283 at standard test conditions. All door bottoms
to meet or exceed scheduled criteria.

2.12 FASTENINGS

Fastenings of proper type, size, quantity, and finish shall be supplied with each article of hardware. Machine screws and expansion shields shall be used for attaching hardware to concrete or masonry. Fastenings exposed to the weather in the finished work shall be of brass, bronze, or stainless steel. Sex bolts, through bolts, or machine screws and grommet nuts, where used on reverse-bevel exterior doors equipped with half-surface or full-surface hinges, shall employ one-way screws or other approved tamperproof screws. Screws for the jamb leaf of half-mortise and full-surface hinges attached to structural steel frames shall be one-way or other approved tamperproof type.

2.13 FINISHES

Unless otherwise specified, finishes shall conform to those identified in BHMA A156.18. Where painting of primed surfaces is required, painting is specified in Section 09900 PAINTING, GENERAL.

2.14 HARDWARE FOR FIRE DOORS

Hardware for fire doors shall conform to the requirements of NFPA 80 and NFPA 101.

PART 3 EXECUTION

3.1 APPLICATION

Hardware shall be located in accordance with DHI-04 and DHI-05. When approved, slight variations in locations or dimensions will be permitted. Application shall be in accordance with DHI-02 or DHI A115-W. Door control devices for exterior doors such as closers and holders, shall normally attach to doors with thru bolts and nuts or sex bolts. Electric hardware items and access control devices shall be installed in accordance with

manufacturer's printed installation procedures.

3.1.1 Hardware for Fire Doors and Smoke-Control Door Assemblies

Hardware for fire doors shall be installed in accordance with the requirements of NFPA 80. Exit devices installed on fire doors shall have a visible label bearing the marking "Fire Exit Hardware". Other hardware installed on fire doors, such as locksets, closers, and hinges shall have a visible label or stamp indicating that the hardware items have been approved by an approved testing agency for installation on fire-rated doors. Hardware for smoke-control door assemblies shall be installed in accordance with NFPA 105.

3.1.2 Door-Closing Devices

Door-closing devices shall be installed and adjusted in accordance with the templates and printed instructions supplied by the manufacturer of the devices. Insofar as practicable, doors opening to or from halls and corridors shall have the closer mounted on the room side of the door.

3.1.3 Kick Plates and Mop Plates

Kick plates shall be installed on the push side of single-acting doors and on both sides of double-acting doors. Mop plates shall be installed on the pull side of the single acting doors.

3.1.4 Auxiliary Hardware

Lever extension flush bolts shall be installed at the top and bottom of the inactive leaf of pairs of doors. The bottom bolt shall operate into a dust-proof floor strike or threshold.

3.1.5 Thresholds

Thresholds shall be secured with a minimum of 3 fasteners per single door width and 6 fasteners per double door width with a maximum spacing of 12 inches. Exterior thresholds shall be installed in a bed of sealant with expansion anchors and stainless steel screws, except that bronze or anodized bronze thresholds shall be installed with expansion anchors with brass screws. Minimum screw size shall be No. 10 length, dependent on job conditions, with a minimum of 3/4 inch thread engagement into the floor or anchoring device used.

3.1.6 Weatherseals

Weatherseals shall be located as indicated, snug to door face and fastened in place with color matched metal screws after door and frames have been finish painted. Screw spacing shall be as recommended by manufacturer.

3.1.7 Gasketing

Gasketing shall be installed at the inside edge of the hinge and head and latch sides of door frame. Frames shall be toleranced for a 1/8 inch clearance between door and frame. Frames shall be treated with tape primer prior to installation.

3.2 OPERATIONAL TESTS

Prior to acceptance of any electrical hardware system, an operational test

shall be performed to determine if devices are operating as intended by the specifications. Wiring shall be tested for correct voltage, current carrying capacity, and proper grounding. Stray voltages in lock wiring shall be eliminated to prevent locking devices from releasing in critical situations.

3.3 HARDWARE SETS

Set 1

6	Ea. Hinges A8111 x 652 x NRP	
1	Exit Device Type 8 x 08 x 626	
1	Cylinder (Type Required) x 626	Yale
1	Exit Device Type 8 x 02 x 626	
2	Closers C02021 x PT4G x 689	
2	Kick Plates (16" x D.W. - 2")	
2	Stops L12131 x 626	
1	Set Weatherstrip 306AV - Head & Jamb x SMS	Pemko
2	Door Bottoms 315CN x D.W. x SMS	Pemko
2	Pcs. Astragal 293CS x D.H. x SMS	Pemko
1	Threshold J32130 x D.W. x E.S. (5" wide) (1/2" tall)	

Set 2

6	Ea. Hinges A8111 x 652 x NRP	
2	Flush Bolts L04081 x 626 - 12"	
1	Dust Proof Strike L04011 x 626	
1	Lockset F13 x 626	
1	Cylinder (Type Required) x 626	Yale
2	Closer CO2061 x PT4G x 689	
2	Stops L12131 x 626	
1	Overhead Drip 346C x D.W. x 4" x SMS	Pemko
1	Set Weatherstrip 306AV - Head & Jam x SMS	Pemko
2	Door Bottoms 315CN x D.W. x E.S.	Pemko
1	Pc. Astragal Seal S88D x D.H.	Pemko
1	Threshold J32130 x D.W. x E.S. (5" wide) (1/2" tall)	

Note: Astragal supplied by door supplier.

Set 3

8	Ea. Hinges A8111 x 641 x NRP	
1	Exit Device Type 8 x 08 x Dark Bronze	
1	Cylinder (Type Required) x 613	Yale
1	Exit Device Type 8 x 02 x Dark Bronze	
2	Closers C2061 x PT4G x 690	
2	Drop Plates (If required)	
2	Stops L12131 x 613	
2	Door Bottoms 315DN x D.W. x SMS	Pemko
1	Threshold J32130 x D.W. x Dark Bronze x E.S.	

NOTE: Weatherstrip by door supplier.

Set 4

4	Ea. Hinges A8111 x 641 x NRP	
1	Exit Device Type 1 x 08 x Dark Bronze	
1	Cylinder (Type required) x 613	Yale
1	Closer C02061 x PT4G x 690	
1	Drop Plate (If required)	
1	Stop L12131 x 613	
1	Door Bottom 315DN x D.W. x SMS	Pemko
1	Threshold J32130 x D.W. x Dark Bronze x E.S.	

NOTE: Weatherstrip by door supplier.

Set 5

4	Ea. Hinges A8111 x 641
1	Push/Pull J402 x J501 x 613 (Barrier Free)
1	Closer C02021 x PT4G x 690
1	Drop Plate (If required)
1	Stop L12131 x 613

Set 6

3	Ea. Hinges A8112 x 652
1	Latchset F01 x 626
1	Wall Stop L02101 x 626
3	Silencers L03011

Set 7

3	Ea. Hinges A8112 x 652
1	Privacy Lock F19 x 626
1	Closer C02011 x 689
1	Kick Plate (16" x D.W. - 2")
1	Wall Stop L02101 x 626
3	Silencers L03011

Set 8

3	Ea. Hinges A8112 x 652	
1	Lockset F04 x 626	
1	Cylinder (Type required) x 626	Yale
1	Wall Stop L02101 x 626	
3	Silencers L03011	
1	Overhead Stop & Holder C01511 x 626 - Door 183A Only	

Set 9

3	Ea. Hinges A8112 x 652	
1	Lockset F04 x 626	
1	Cylinder (Type required) x 626	Yale
1	Closer C02061 or C02051 x 689	
1	Kick Plate (16" x D.W. - 2")	
1	Wall Stop L02101 x 626	
1	Floor Stop L12131 x 626 - Door 136B Only	
3	Silencers L03011	

Set 10

3	Ea. Hinges A8112 x 652	
1	Lockset F07 x 626	
1	Cylinder (Type required) x 626	Yale
1	Closer C02011 x 689	
1	Kick Plate (16" x D.W. - 2")	
1	Wall Stop L02101 x 626	
3	Silencers L03011	

Note: Door 136B only

1	Set Sound Seal S88D (Head & Jamb)	Pemko
1	Automatic Door Bottom 4301CR x SMS	Pemko

Set 11

3	Ea. Hinges A8111 x 652 x NRP	
1	Exit Device Type 1 x 08 x 626	
1	Cylinder (Type required) x 626	Yale
1	Closer C02061 x PT4G x 689	
1	Stop L12131 x 626	
1	Overhead Drip 346C x D.W. - 4" x SMS	Pemko
1	Set Weatherstrip 306AV (Head & Jamb)	Pemko
1	Door Bottom 315CN x D.W. x SMS	Pemko
1	Threshold J32130 x D.W. x E.S. - AL	

Set 12

3	Ea. Hinges A8111 x 652 (5" x 4.5")	
1	Exit Device Type 1 x 08 x 626	
1	Cylinder (Type required) x 626	Yale
1	Closer C02021 x 689	
1	Kick Plate 16" x D.W. - 2"	
1	Wall Magnet C00011 x 689	
3	Silencers L03011	

NOTE: Wall Magnet wired to Smoke/Fire System.
NOTE: Electrical contractor shall provide conduit wall.

Set 13

3	Ea. Hinges A8111 x 641 x NRP	
1	Exit Device Type 1 x 08 x Dark Bronze	
1	Cylinder (Type required) x 613	Yale
1	Closer C02061 x PT4G x 690	
1	Drop Plate (If required)	
1	Stop L12131 x 613	
1	Set Weatherstrip 306AV (Head & Jamb) x SMS	Pemko
1	Door Bottom 315DN x D.W. x SMS	Pemko
1	Threshold J32130 x D.W. x Dark Bronze x E.S.	Pemko

Set 14

8	Ea. Hinges A8111 x 641
2	Set Push/Pull J402 x J501 x 613 (Barrier Free)
2	Closers C02021 x 690
2	Drop Plates (If required)
2	Stops L12131 x 613

Set 15

3	Ea. Hinges A8112 x 652
1	Push Plate J301 (3.5" x 15") x US32D
1	Pull Plate J405 (3.5" x 15") x US32D
1	Closer C02021 x 689
1	Kick Plate (16" x D.W. - 2")
1	Wall Stop L02101 x 626
3	Silencers L03011

Set 16

6	Ea. Hinges A8112 x 652	
2	Exit Devices Type 2 x 08 x 626	
2	Cylinders (Type Required) x 626	Yale
2	Closers C02021 x 689	
2	Kick Plates (16" x D.W. - 2")	
2	Wall Stops L02101 x 626	
2	Wall Magnet C00011 x 689	
1	Set Sound Seal S88D (Head & Jamb)	Pemko
2	Meeting Stile Astragals 293CS x Jamb	Pemko

NOTE: Wall Magnet wired to Smoke/Fire System.
NOTE: Electrical contractor shall provide conduit wall.

Set 17

6	Ea. Hinges A8112 x 652	
2	Exit Devices Type 2 x 08 x 626	
2	Cylinders (Type required) x 626	Yale
2	Closers C02021 x 689	
2	Kick Plates (16" x D.W. - 2")	
2	Wall Stops L02101 x 626	
2	Wall Magnet C00011 x 689	
4	Silencers L03011	

NOTE: Wall Magnet wired to Smoke/Fire System.
NOTE: Electrical contractor shall provide conduit wall.

Set 18

3	Ea. Hinges A8111 x 652	
1	Lockset F04 x 626	
1	Cylinder (Type required) x 626	Yale
1	Wall Stop L02101 x 626	
3	Silencers L03011	
1	Overhead Stop & Holder C01511 x 626 - Door 183A Only	

Set 19

3	Ea. Hinges A8111 x 652
1	Ea. Lock F04 x 626
1	Wall Stop L02101 x 626
3	Silencers L03011

-- End of Section --

SECTION TABLE OF CONTENTS

DIVISION 08 - DOORS & WINDOWS

SECTION 08810

GLASS AND GLAZING

12/93

PART 1 GENERAL

1.1 REFERENCES
1.2 SUBMITTALS
1.3 SYSTEM DESCRIPTION
1.4 DELIVERY, STORAGE AND HANDLING
1.5 PROJECT/SITE CONDITIONS
1.6 WARRANTY
1.6.1 Insulating Glass
1.6.2 Monolithic Opacified Spandrel

PART 2 PRODUCTS

2.1 INSULATING GLASS
2.1.1 Clear Insulating Glass
2.2 HEAT-TREATED GLASS
2.2.1 Tempered Glass
2.3 SPANDREL GLASS
2.3.1 Ceramic-Opacified Spandrel Glass
2.4 MIRRORS
2.4.1 Glass Mirrors
2.4.2 Mirror Accessories
2.4.2.1 Mastic
2.4.2.2 Mirror Frames
2.5 GLAZING ACCESSORIES
2.5.1 Preformed Tape
2.5.2 Sealant
2.5.3 Glazing Gaskets
2.5.3.1 Fixed Glazing Gaskets
2.5.3.2 Wedge Glazing Gaskets
2.5.3.3 Aluminum Framing Glazing Gaskets
2.5.4 Setting and Edge Blocking

PART 3 EXECUTION

3.1 PREPARATION
3.2 INSTALLATION
3.3 CLEANING
3.4 PROTECTION

-- End of Section Table of Contents --

SECTION 08810

GLASS AND GLAZING
12/93

PART 1 GENERAL

1.1 REFERENCES

The publications listed below form a part of this specification to the extent referenced. The publications are referred to in the text by basic designation only.

AMERICAN SOCIETY FOR TESTING AND MATERIALS (ASTM)

ASTM C 509	(1991) Elastomeric Cellular Preformed Gasket and Sealing Material
ASTM C 864	(1990) Dense Elastomeric Seal Gaskets, Setting Blocks, and Spacers
ASTM C 920	(1987) Elastomeric Joint Sealants
ASTM C 1036	(1991) Flat Glass
ASTM C 1048	(1992) Heat-Treated Flat Glass - Kind HS, Kind FT Coated and Uncoated Glass
ASTM D 395	(1989) Rubber Property - Compression Set
ASTM E 773	(1988) Seal Durability of Sealed Insulating Glass Units
ASTM E 774	(1988) Sealed Insulating Glass Units

FLAT GLASS MARKETING ASSOCIATION (FGMA)

FGMA-01	(1990) Glazing Manual

NATIONAL FIRE PROTECTION ASSOCIATION (NFPA)

NFPA 80	(1992) Fire Doors and Windows

1.2 SUBMITTALS

Government approval is required for submittals with a "GA" designation; submittals having an "FIO" designation are for information only. The following shall be submitted in accordance with Section 01300 SUBMITTAL PROCEDURES:

SD-01 Data

Glass; FIO. Glazing Accessories; FIO.

Manufacturer's descriptive product data, handling and storage recommendations, installation instructions, and cleaning instructions.

SD-04 Drawings

Glazing Materials and Accessories; FIO.

Drawings showing complete details of the proposed setting methods, mullion details, edge blocking, size of openings, frame details, materials, and types and thickness of glass.

Control Tower Glazing Units; FIO.

Drawing showing complete details of the proposed setting methods and materials.

SD-13 Certificates

Glass; FIO.

Certificates stating that the glass meets the specified requirements. Labels or marking affixed to the glass will be accepted in lieu of certificates.

SD-14 Samples

Glass; FIO.

Two 8 x 10 inch samples of each of the following: insulating glass units.

1.3 SYSTEM DESCRIPTION

Glazing systems shall be fabricated and installed watertight and airtight to withstand thermal movement and wind loading without glass breakage, gasket failure, deterioration of glazing accessories, and defects in the work.

1.4 DELIVERY, STORAGE AND HANDLING

Glazing compounds shall be delivered to the site in the manufacturer's unopened containers. Glass shall be stored indoors in a safe, well ventilated dry location in accordance with manufacturer's instructions, and shall not be unpacked until needed for installation. Glass shall not be stored on site over 1 month.

1.5 PROJECT/SITE CONDITIONS

Glazing work shall not be started until outdoor temperature is above 40 degrees F and rising, unless procedures recommended by glass manufacturer and approved by Contracting Officer are made to warm the glass and rabbet surfaces. Ventilation shall be provided to prevent condensation of moisture on glazing work during installation. Glazing work shall not be performed during damp or raining weather.

1.6 WARRANTY

1.6.1 Insulating Glass

Manufacturer shall warrant the insulating glass to be free of fogging or film formation on the internal glass surfaces caused by failure of the hermetic seal for a period of 10 years from Date of Substantial Completion.

Warranty shall be signed by manufacturer.

1.6.2 Monolithic Opacified Spandrel

Manufacturer shall warrant the opacifier film on the spandrel to be free of peeling for a period of five years after Date of Substantial Completion. Warranty shall be signed by manufacturer.

PART 2 PRODUCTS

2.1 INSULATING GLASS

Insulating glass shall be Class A preassembled units of dual-seal construction consisting of lites of glass separated by an aluminum spacer and dehydrated space conforming to ASTM E 773 and ASTM E 774. Aluminum spacer shall be roll-formed, with bent or tightly soldered joints to completely seal the spacer periphery and eliminate moisture and hydrocarbon vapor transmission into airspace through the corners. Primary seal shall be compressed polyisobutylene and the secondary seal shall be a specially formulated silicone. Glass types shall be as follows:

2.1.1 Clear Insulating Glass

Glass for two-pane insulating units shall consist of the following. The interior glass pane shall be tempered glass, Class 1 - clear, Quality q3 - glazing select conforming to ASTM C 1036. Exterior glass pane shall be tempered flat glass, Class 2-tinted, Quality q3 - glazing select conforming with ASTM C 1036.

2.2 HEAT-TREATED GLASS

Heat-treated glass shall conform to the following requirements.

2.2.1 Tempered Glass

Tempered glass shall be kind FT fully tempered transparent flat type, Class 1-clear and 2-tinted as indicated on the Drawings, Condition A uncoated surface, Quality q3 - glazing select conforming to ASTM C 1048.

2.3 SPANDREL GLASS

2.3.1 Ceramic-Opacified Spandrel Glass

Ceramic-opacified spandrel glass shall be kind HS heat-strengthened transparent flat type, Condition B, coated with a colored ceramic material on No. 2 surface, Quality q3 - glazing select, conforming to ASTM C 1048. Appearance of spandrel glass shall match insulated glass panels as specified herein.

2.4 MIRRORS

2.4.1 Glass Mirrors

Glass for mirrors shall be Type I transparent flat type, Class [1-clear, Glazing Quality q1 1/4 inch thick conforming to ASTM C 1036. Glass shall be coated on one surface with silver coating, copper protective coating, and mirror backing paint. Silver coating shall be highly adhesive pure silver coating of a thickness which shall provide reflectivity of 83

percent or more of incident light when viewed through 1/4 inch thick glass, and shall be free of pinholes or other defects. Copper protective coating shall be pure bright reflective copper, homogeneous without sludge, pinholes or other defects, and shall be of proper thickness to prevent "adhesion pull" by mirror backing paint. Mirror backing paint shall consist of two coats of special scratch and abrasion-resistant paint, and shall be baked in uniform thickness to provide a protection for silver and copper coatings which will permit normal cutting and edge fabrication.

2.4.2 Mirror Accessories

2.4.2.1 Mastic

Mastic for setting mirrors shall be a [polymer] type mirror mastic resistant to water, shock, cracking, vibration and thermal expansion. Mastic shall be compatible with mirror backing paint, and shall be approved by mirror manufacturer.

2.4.2.2 Mirror Frames

Mirrors shall be provided with mirror frames (J-mold channels) fabricated of one-piece roll-formed Type 304 stainless steel with No. 4 brushed satin finish and concealed fasteners which will keep mirrors snug to wall. Frames shall be 1-1/4 x 1/4 x 1/4 inch continuous at top and bottom of mirrors and sides where requried. Concealed fasteners of type to suit wall construction material shall be provided with mirror frames.

2.5 GLAZING ACCESSORIES

2.5.1 Preformed Tape

Preformed tape shall be elastomeric rubber extruded into a ribbon of a width and thickness suitable for specific application. Tape shall be of type which will remain resilient, have excellent adhesion, and be chemically compatible to glass, metal, or wood.

2.5.2 Sealant

Sealant shall be elastomeric conforming to ASTM C 920, Type S or M, Grade NS, Class 12.5, Use G, of type chemically compatible with setting blocks, preformed sealing tape and sealants used in manufacturing insulating glass. Color of sealant shall be as selected.

2.5.3 Glazing Gaskets

Glazing gaskets shall be extruded with continuous integral locking projection designed to engage into metal glass holding members to provide a watertight seal during dynamic loading, building movements and thermal movements. Glazing gaskets for a single glazed opening shall be continuous one-piece units with factory-fabricated injection-molded corners free of flashing and burrs. Glazing gaskets shall be in lengths or units recommended by manufacturer to ensure against pull-back at corners. Glazing gasket profiles shall be as indicated on drawings.

2.5.3.1 Fixed Glazing Gaskets

Fixed glazing gaskets shall be closed-cell (sponge) smooth extruded compression gaskets of cured elastomeric virgin neoprene compounds conforming to ASTM C 509, Type 2, Option 1.

2.5.3.2 Wedge Glazing Gaskets

Wedge glazing gaskets shall be high-quality extrusions of cured elastomeric virgin neoprene compounds, ozone resistant, conforming to ASTM C 864, Option 1, Shore A durometer between 65 and 75.

2.5.3.3 Aluminum Framing Glazing Gaskets

Glazing gaskets for aluminum framing shall be permanent, elastic, non-shrinking, non-migrating, watertight and weathertight.

2.5.4 Setting and Edge Blocking

Neoprene setting blocks shall be dense extruded type conforming to ASTM D 395, Method B, Shore A durometer between 70 and 90. Edge blocking shall be Shore A durometer of 50 (+ or - 5). Silicone setting blocks shall be required when blocks are in contact with silicone sealant. Profiles, lengths and locations shall be as required and recommended in writing by glass manufacturer.

PART 3 EXECUTION

3.1 PREPARATION

Openings and framing systems scheduled to receive glass shall be examined for compliance with approved shop drawings, FGMA-01 and glass manufacturer's recommendations including size, squareness, offsets at corners, presence and function of weep system, face and edge clearance requirements and effective sealing between joints of glass-framing members. Detrimental materials shall be removed from glazing rabbet and glass surfaces and wiped dry with solvent. Glazing surfaces shall be dry and free of frost.

3.2 INSTALLATION

Glass and glazing work shall be performed in accordance with approved shop drawings, FGMA-01, glass manufacturer's instructions and warranty requirements. Glass shall be installed with factory labels intact and removed only when instructed. Wired glass shall be installed in accordance with NFPA 80. Edges and corners shall not be ground, nipped or cut after leaving factory. Springing, forcing or twisting of units during installation will not be permitted.

3.3 CLEANING

Upon completion of project, outside surfaces of glass shall be washed clean and the inside surfaces of glass shall be washed and polished in accordance with glass manufacturer's recommendations.

3.4 PROTECTION

Glass work shall be protected immediately after installation. Glazed openings shall be identified with suitable warning tapes, cloth or paper flags, attached with non-staining adhesives. Reflective glass shall be protected with a protective material to eliminate any contamination of the

reflective coating. Protective material shall be placed far enough away from the coated glass to allow air to circulate to reduce heat buildup and moisture accumulation on the glass. Glass units which are broken, chipped, cracked, abraded, or otherwise damaged during construction activities shall be removed and replaced with new units.

-- End of Section --

SECTION TABLE OF CONTENTS

DIVISION 08 - DOORS & WINDOWS

SECTION 08900

INSULATED TRANSLUCENT PANEL SYSTEM

07/93

PART 1 GENERAL

1.1 REFERENCES
1.2 SUBMITTALS
1.3 QUALITY ASSURANCE
1.3.1 Factory Tests
1.3.1.1 Deflection and Structural Tests
1.3.1.2 Water Penetration Test
1.3.1.3 Air Infiltration Test
1.3.1.4 Delamination Test
1.3.1.5 Thermal Conductance Tests
1.3.1.6 Fire Resistance Tests
1.4 INSULATED TRANSLUCENT PANEL SYSTEM REQUIREMENTS
1.4.1 Source
1.4.2 Design
1.4.3 Thermal Movement
1.4.4 Tolerances
1.5 DELIVERY AND STORAGE
1.5.1 Protective Covering
1.5.2 Identification

PART 2 PRODUCTS

2.1 MATERIALS
2.1.1 Aluminum
2.1.1.1 Finish
2.1.2 Metal Fasteners
2.1.3 Translucent Glass Fiber Facing Sheets

PART 3 EXECUTION

3.1 FABRICATION
3.2 INSTALLATION
3.2.1 Bench Marks and Reference Points
3.2.2 Verifying Conditions and Adjacent Surfaces
3.3 FIELD TESTS
3.4 CLEANING AND PROTECTION

-- End of Section Table of Contents --

SECTION 08900

INSULATED TRANSLUCENT PANEL SYSTEM
07/93

PART 1 GENERAL

1.1 REFERENCES

The publications listed below form a part of this specification to the extent referenced. The publications are referred to within the text by the basic designation only.

THE ALUMINUM ASSOCIATION, INCORPORATED (AA)

AA 1	1988 Aluminum Standards and Data

AMERICAN ARCHITECTURAL MANUFACTURERS ASSOCIATION (AAMA)

AAMA 605.2	1990 High Performance Organic Coatings on Architectural Extrusions and Panels
AAMA 609.1	1985 Cleaning and Maintenance of Architectural Anodized Aluminum
AAMA 610.1	1979 Cleaning and Maintenance of Painted Aluminum Extrusions and Curtain Wall Panels

AMERICAN SOCIETY FOR TESTING AND MATERIALS (ASTM)

ASTM C236	1987 Steady-State Thermal Performance of Building Assemblies by Means of a Guarded Hot Box
ASTM D1037	1989 Evaluating the Properties of Wood-Base Fiber and Particle Panel Materials
ASTM E84	1989 (Rev. A) Surface Burning Characteristics of Building Materials
ASTM E283	1984 Rate of Air Leakage Through Exterior Windows, Curtain Walls, and Doors
ASTM E330	1984 Structural Performance of Exterior Windows, Curtain Walls, and Doors by Uniform Static Air Pressure Difference
ASTM E331	1986 Water Penetration of Exterior Windows, Curtain Walls, and Doors by Uniform Static Air Pressure Difference

1.2 SUBMITTALS

Government approval is required for submittals with a "GA" designation; submittals having an "FIO" designation are for information only. The following shall be submitted in accordance with Section 01300 SUBMITTAL PROCEDURES:

SD-01 Data

Insulated Translucent Panel System; FIO. Calculations; FIO.

Manufacturer's descriptive product data, handling and storage recommendations, installation instructions, and cleaning instructions. Submit structural and thermal calculations for complete panel assembly.

SD-04 Drawings

Insulated translucent panel system; FIO.

Submit to the Contracting Officer for translucent panel system and accessories. Drawings shall indicate in detail all system parts including elevations, full-size sections, framing, jointing, panels, types and thickness of metal, flashing and coping details, field connections, weep and drainage systems, finishes, sealing methods, and erection details.

SD-08, Statements

Manufacturer's Qualifications; FIO.

Insulated translucent panel system shall be manufactured by a company continuously and regularly employed in the manufacture of similar products for a period of at least 5 consecutive years. Provide evidence to show that these products have been used satisfactorily on at least 4 projects of similar size, scope, and type within the 5 year period. At least 2 of the projects shall have been in successful use for 3 years or longer.

Installer's Qualifications; FIO.

Provide evidence that the installer has been in the business of erecting similar products for at least 3 years and show evidence of satisfactory completion of projects of similar size, scope, and type.

SD-11, Factory Test Reports

Deflection and structural tests; FIO. Water penetration tests; FIO. Air infiltration tests; FIO. Delamination tests; FIO. Thermal conductance tests; FIO. Fire resistance test; FIO.

Submit to the Contracting Officer.

SD-14 Samples

Corner section of translucent panel system; FIO. Accessories; FIO.

Submit to the Contracting Officer.

Submit corner section showing fasteners, panel, interior and exterior facing sheets, grid core, translucent insulation material, and weather-stripping. Submit one sample minimum 12 inches by 12 inches.

1.3 QUALITY ASSURANCE

1.3.1 Factory Tests

Perform the following tests:

1.3.1.1 Deflection and Structural Tests

No panel shall deflect, in a direction normal to the plane of the wall, more than 1/175 of its clear span or 3/4 inch, whichever is less, when tested in accordance with ASTM E330, except that when a plastered surface will be affected the deflection shall not exceed 1/360 of the span. No framing member shall have a permanent deformation in excess of 0.2 percent of its clear span when tested in accordance with ASTM E330 for a minimum test period of 10 seconds at 1.5 times the design wind pressures indicated.

1.3.1.2 Water Penetration Test

No water penetration shall occur when the panel assembly is tested in accordance with ASTM E331 at a differential static test pressure of 20 percent of the inward acting design wind pressure as specified, but not less than 4 psf. Make provision in the wall construction for adequate drainage to the outside of water leakage or condensation that occurs within the outer face of the wall. Leave drainage and weep openings in members and wall open during test.

1.3.1.3 Air Infiltration Test

Air infiltration through the wall, when tested in accordance with ASTM E283, shall not exceed 0.06 cfm per square foot of fixed wall area.

1.3.1.4 Delamination Test

Panel facings shall show no evidence of delamination, warpage or other deterioration or damage when subjected to the six "Accelerated Aging Cycles" specified in ASTM D1037.

1.3.1.5 Thermal Conductance Tests

The thermal transmittance of translucent panel assemblies shall not exceed a U-value, Btu/hr/sq ft/degree F, as specified, when tested in accordance with ASTM C236. The average calculated thermal transmittance of the complete assembly including panels, windows, and all other components shall not exceed a U-value of 0.18 (by NFRC). U-values of components shall be determined in accordance with ASTM C236.

1.3.1.6 Fire Resistance Tests

The interior facing of the translucent panel shall have a flame spread rating of not exceeding 25 and a smoke developed rating not exceeding 50 when tested in accordance with ASTM E84.

1.4 INSULATED TRANSLUCENT PANEL SYSTEM REQUIREMENTS

Provide system complete with thermally broken framing, mullions, trim, framed thermally broken pre-assembled units, facing, sealants, insulation, fasteners, anchors, accessories, concealed auxiliary members, and attachment devices for securing the system to the structure as specified or indicated.

1.4.1 Source

System components shall be furnished by one manufacturer or fabricator; however; all components need not be products of the same manufacturer.

1.4.2 Design

Fully coordinate system accessories directly incorporated, and adjacent to contiguous related work and insure materials compatibility, deflection limitations, thermal movements, and clearances and tolerances as indicated or specified.

1.4.3 Thermal Movement

Fabricate, assemble, and erect system with adequate allowances for expansion and contraction of components and fastenings to prevent buckling damage, joint seal failure, cracking, undue stress on fastenings or thermal movement on assumed ambient temperature range of from 110 degrees F to 20 degrees F.

1.4.4 Tolerances

Design and erect system to accommodate tolerances in building frame and other contiguous work as indicated or specified. Provide with the following tolerances:

a. Maximum variation from plane or location shown on approved shop drawings: 1/8 inch per 12 feet of length up to not more than 1/2 inch in any total length.

b. Maximum offset from true alignment between two identical members abutting end to end in line: 1/16 inch.

1.5 DELIVERY AND STORAGE

Inspect materials delivered to the site for damage; unload and store with a minimum of handling. Storage spaces shall be dry locations with adequate ventilation, free from heavy dust, not subject to combustion products or sources of water, and shall permit easy access for inspection and handling. Deliver sealing compounds to the job site in sealed containers labeled to show the designated name, formula or specifications number; lot number; color; date of manufacturer; shelf life; and curing time when applicable.

1.5.1 Protective Covering

Prior to shipment from the factory, place knocked-down lineal numbers in cardboard containers and cover finished surfaces of aluminum and stainless steel with protective covering of adhesive paper, waterproof tape, or strippable plastic. Covering shall not chip, peel, or flake due to temperature or weather, shall protect against discoloration and surface damage from transportation, and storage, and shall be resistant to alkaline mortar and plaster.

1.5.2 Identification

Prior to delivery, mark components to correspond with shop and erection drawings.

PART 2 PRODUCTS

2.1 MATERIALS

2.1.1 Aluminum

Shall be free from defects impairing strength or durability of surface finish. Standard alloys shall conform to standards and designations of AA 1. Special alloys, not covered by the following ASTM specifications, shall conform to standards and designations recommended by the manufacturer for the purpose intended. Framing shall be thermally broken.

2.1.1.1 Finish

Aluminum used for framing shall have a high performance corrosion resistant coating meeting the requirements of AAMA 605.2.

2.1.2 Metal Fasteners

Provide series 300 stainless steel screws.

2.1.3 Translucent Glass Fiber Facing Sheets

Translucent panels shall be thermally broken and have crystal glass fiber exterior sheet with crystal glass fiber interior sheet, both having uniform color. Provide exterior face sheets having a minimum thickness of 0.070 inch and interior face sheets having a minimum thickness of 0.045 inch. Provide face sheets free of ridges and wrinkles which prevent proper surface contact in bonding the aluminum grid core. Clusters of air bubbles or pinholes which collect moisture and dirt will not be acceptable.

PART 3 EXECUTION

3.1 FABRICATION

The components shall be of the materials and thickness indicated or specified. The details indicated are representative of the required design and profiles. Acceptable designs may differ from that shown if the proposed system components conform to the limiting dimensions indicated and the requirements specified herein. Fabricate grid core of 6063-T6 aluminum I-beams having a grid pattern of 12 by 24 inch nominal shoji and symmetrical about the horizontal center line of each panel. Panels shall have a maximum light transmission of 20% and a shading coefficient of 0.26.

3.2 INSTALLATION

Prepare openings including isolation of dissimilar materials from aluminum which may cause damage by electrolysis. Installation and erection of system and all components shall be performed under direct supervision of and in accordance with approved recommendations and instructions of the system manufacturer or fabricator.

3.2.1 Bench Marks and Reference Points

Establish and permanently mark bench marks for elevations and building line offsets for alignment at convenient points. Should any error or discrepancy be discovered in location of the marks, stop erection work in that area until discrepancies have been corrected.

3.2.2 Verifying Conditions and Adjacent Surfaces

After establishment of lines and grades and prior to system installation examine supporting structural elements. Verify governing dimensions including floor elevations, floor to floor heights, minimum clearances

between panels and structural frames, and other permissible dimensional tolerances in the building frame.

3.3 FIELD TESTS

Conduct field check test for water leakage on east and west elevation areas after erection. Conduct test where directed and take necessary remedial action.

3.4 CLEANING AND PROTECTION

Upon completion of insulated panel system installation, thoroughly wash surfaces on both sides and remove labels, paint spots, putty, compounds, and other defacements. Protect, clean and maintain aluminum surfaces in accordance with AAMA 609.1 and AAMA 610.1.

-- End of Section --

SECTION TABLE OF CONTENTS

DIVISION 09 - FINISHES

SECTION 09200

LATHING AND PLASTERING

01/94

PART 1 GENERAL

1.1 REFERENCES
1.2 SUBMITTALS
1.3 QUALIFICATIONS
1.4 DELIVERY, STORAGE AND HANDLING
1.5 ENVIRONMENTAL CONDITIONS

PART 2 PRODUCTS

2.1 SUSPENDED SOFFIT FRAMING
2.2 ACCESSORIES
2.2.1 Hangers
2.2.2 Fastenings
2.2.2.1 Tie Wire
2.2.2.2 Clips
2.2.3 Expanded Flange Corner Beads
2.2.4 Bullnose Corner Beads
2.2.5 Striplath
2.2.6 Casing Beads
2.2.7 Control Joints
2.2.8 Screws
2.3 METAL LATH
2.3.1 Expanded Metal Lath
2.4 CEMENT PLASTER MATERIALS
2.4.1 Portland Cement
2.4.2 Aggregates
2.4.3 Water
2.4.4 Lime

PART 3 EXECUTION

3.1 PREPARATION
3.2 SUSPENDED SOFFIT FRAMING
3.2.1 Hangers
3.2.2 Main Runners
3.2.3 Furring Channels
3.3 LATHING
3.3.1 Metal Lath on Soffits
3.3.1.1 Side and End Laps
3.3.1.2 Chases and Recesses
3.4 OPENINGS
3.4.1 Steel Frames
3.4.2 Wood Frames
3.4.3 Soffit Openings
3.5 INSTALLATION OF ACCESSORIES

3.5.1 Casing Beads
3.5.2 Expansion and Control Joint Beads
3.5.3 Metal Trim
3.6 PLASTER THICKNESS AND SURFACE EVENNESS
3.6.1 Metal Grounds and Screeds
3.6.2 Plaster Screeds
3.7 PROPORTIONS AND MIXING
3.7.1 Base Coat
3.7.2 Portland-Cement-Plaster Finish
3.8 MACHINE APPLICATION
3.9 Quality Control
3.10 APPLICATION OF FINISHES
3.10.1 Portland-Cement-Plaster Finish Coat
3.11 PATCHING
3.12 SAMPLES OF COMPLETED WORK

-- End of Section Table of Contents --

SECTION 09200

LATHING AND PLASTERING
01/94

PART 1 GENERAL

1.1 REFERENCES

The publications listed below form a part of this specification to the extent referenced. The publications are referred to in the text by basic designation only.

AMERICAN SOCIETY FOR TESTING AND MATERIALS (ASTM)

ASTM A 580	(1991b) Stainless and Heat Resisting Steel Wire
ASTM A 853	(1991) Steel Wire, Carbon, for General Use
ASTM C 29	(1991a) Unit Weight and Voids in Aggregate
ASTM C 35	(1989a) Inorganic Aggregates For Use in Gypsum Plaster
ASTM C 150	(1992) Portland Cement
ASTM C 206	(1984; R 1992) Finishing Hydrated Lime
ASTM C 645	(1992) Non-load (Axial) Bearing Steel Studs, Runners (Track), and Rigid Furring Channels for Screw Application of Gypsum Board
ASTM C 754	(1988) Installation of Steel Framing Members to Receive Screw-Attached Gypsum
ASTM C 841	(1990) Installation of Interior Lathing and Furring
ASTM C 842	(1985; R 1990) Application of Interior Gypsum Plaster
ASTM C 847	(1988; R 1992) Metal Lath
ASTM C 926	(1990) Application of Portland Cement-Based Plaster
ASTM C 1002	(1993) Steel Drill Screws for the Application of Gypsum Board or Metal Plaster Bases
ASTM C 1047	(1992) Accessories for Gypsum Wallboard and Gypsum Veneer Base

FEDERAL SPECIFICATIONS (FS)

FS QQ-N-281	(Rev D; Am 2) Nickel-Copper Alloy Bar, Rod, Plate, Sheet, Strip, Wire, Forgings, and Structural and Special Shaped Sections

1.2 SUBMITTALS

Government approval is required for submittals with a "GA" designation; submittals having an "FIO" designation are for information only. The following shall be submitted in accordance with Section 01300 SUBMITTAL PROCEDURES:

SD-01 Data

Plastering Materials and Accessories; FIO.

Manufacturer's pre-printed descriptive data, catalog cuts, and installation instructions for plastering materials and accessories.

SD-04 Drawings

Lath and Plaster; FIO.

Drawings including installation details, ceiling framing, and furring.

SD-14 Samples

Plaster; FIO

One 36 inch square sample panel of each specified finish.

1.3 QUALIFICATIONS

Manufacturer shall specialize in manufacturing the types of material specified, and shall have a minimum of 10 years of documented successful experience. Applicator shall specialize in the type of gypsum board work required to meet requirements, with a minimum of 5 years of documented experience.

1.4 DELIVERY, STORAGE AND HANDLING

Materials shall be delivered to project site in the original containers bearing the name of manufacturer, contents and brand name. Plaster, cement, and lime shall be stored off the ground under weathertight cover and away from sweating walls and other damp surfaces until ready for use. Accessories shall be stored off the ground in a weathertight structure for protection. Damaged or deteriorated materials shall be removed from project site.

1.5 ENVIRONMENTAL CONDITIONS

A temperature between 40 degrees F and 80 degrees F shall be evenly maintained in the building for a period of not less than 1 week prior to application of plaster, and for a period of at least 1 week after the plaster is set, in accordance with ASTM C 842.

PART 2 PRODUCTS

2.1 SUSPENDED SOFFIT FRAMING

Main carrying channels for suspended plaster soffits shall conform to ASTM C 645. Carrying channels shall be formed from 16 gauge cold-rolled steel, 1-1/2 inch wide x 7/16 inch deep. Cross furring members shall conform to ASTM C 645, and shall be formed from cold-rolled steel, 3/4 inch wide x 7/16 inch deep. Carrying channels and furring members shall be hot-dip galvanized after fabrication.

2.2 ACCESSORIES

2.2.1 Hangers

Suspended soffit runner channel hangers shall be soft, annealed steel wire not less than 0.1620-inch nominal diameter, conforming to ASTM A 853 or flat iron or steel straps, at least 3/32 by 7/8 inch size, coated with zinc, cadmium, or rust-inhibiting paint.

2.2.2 Fastenings

Tie wire, rings, and other fastenings shall be corrosion-resisting steel conforming to ASTM A 580, composition 302, 304, or 316, Condition A, or nickel-copper alloy conforming to FS QQ-N-281, Class A or B, annealed condition. Walls, partitions, and other vertical surfaces not incorporated in ceiling construction may be erected with soft, annealed steel conforming to ASTM A 853.

2.2.2.1 Tie Wire

Tie wire for constructing partitions and vertical furring, for securing metal lath to supports, and for lacing shall be not less than 0.0475 inch diameter. Tie wire for all other applications shall be not less than 0.0625 inch diameter.

2.2.2.2 Clips

Clips used in lieu of tie wire for securing furring channels to the runner channels in ceiling construction shall be made from strips not less than 1/8 inch thick or shall be hairpin clip formed of 8 gauge wire not less than 0.01620 inch nominal diameter. Other clips and rings or fastenings of similar materials shall be equivalent in holding power to that provided by tie wire for the specific application.

2.2.3 Expanded Flange Corner Beads

Expanded flange corner beads shall conform to ASTM C 1047. Beads shall be fabricated of aluminum 26 gauge galvanized steel 0.030 inch thick zinc alloy, with 2-1/2 inch wide flanges and 3/16 inch thick bead.

2.2.4 Bullnose Corner Beads

Bullnose corner beads shall conform to ASTM C 1047. Beads shall be fabricated of aluminum 26 gauge galvanized steel, with 2-1/2 inch wide flanges and 3/4 inch bead.

2.2.5 Striplath

Striplath shall conform to ASTM C 847. Striplath shall be fabricated of galvanized steel, 2.5 pounds per square yard.

2.2.6 Casing Beads

Casing beads shall conform to ASTM C 847. Beads shall be fabricated of 0.0276 inch thick steel depth as required, 1 inch minimum wide expansion wings, front edge of face flange shaved for intended use, back slightly arched to provide a spring effect.

2.2.7 Control Joints

Control joints shall conform to ASTM C 847, and shall be designed for expansion and contraction of plaster work due to thermal exposure. Control joints shall be fabricated of 0.030 inch thick zinc alloy for exterior applications, with perforated or expanded-metal wings.

2.2.8 Screws

Self-drill steel screws shall conform to ASTM C 1002. Screws shall be Type S for use with steel framing.

2.3 METAL LATH

2.3.1 Expanded Metal Lath

Expanded metal lath shall conform to ASTM C 847. Lath shall be self-furring lath, expanded from cold-rolled carbon sheet steel of commercial quality, coated with rust-inhibitive paint after fabrication, 3.4 pounds per square yard, without backing.

2.4 CEMENT PLASTER MATERIALS

2.4.1 Portland Cement

Portland cement shall conform to ASTM C 150, white portland cement Type I with 1/2 inch chopped alkali-resistant fiberglass strands, minimum 1-1/2 pounds per sack of cement.

2.4.2 Aggregates

The unit weight of aggregates shall be determined in accordance with ASTM C 29. Aggregates shall conform to ASTM C 35, except that the gradation of natural or manufactured sand for portland-cement plaster shall be as follows:

Sieve Size	Sand, Percentage by Weight Retained on Each Sieve Maximum	Minimum
4	0	--
8	8	2
16	38	22
30	78	52
50	97	65

Sieve Size	Sand, Percentage by Weight Retained on Each Sieve Maximum	Minimum
100	100	97

2.4.3 Water

Water shall be clean, fresh, potable, and free from injurious amounts of oils, acids, alkalis and organic matter injurious to the plaster and to any metal in the system.

2.4.4 Lime

Lime shall conform to ASTM C 206, Type N-Normal hydrated finishing lime suitable for use in scratch brown and finish coats of portland-cement plaster.

PART 3 EXECUTION

3.1 PREPARATION

Project conditions shall be verified as ready to receive the work. Field measurements shall be verified for compliance with manufacturer's published recommendations. Beginning of installation means installer accepts existing conditions.

3.2 SUSPENDED SOFFIT FRAMING

Suspended system shall be installed in accordance with ASTM C 754 and ASTM C 841. Where channels are spliced, the ends shall be overlapped not less than 12 inches for 1-1/2 inch channels and not less than 8 inches for 3/4 inch channels with flanges of channels interlocked and securely tied near each end of the splice with two loops of the tie wire. Splices shall be staggered.

3.2.1 Hangers

Wire or strap hangers shall be attached to structural members in accordance with ASTM C 841, except hangers shall be spaced not more than 48 inches along runner channels and 36 inches in the other direction or 42 inches in both directions unless otherwise indicated or approved. Locations of hangers shall be coordinated with other work. Hangers at ends of runner channels shall be located not more than 6 inches from wall. Hanger wire shall be looped around bottom chord of open-web steel joist or structural steel members, or shall be looped around center I-beam clamps attached to structural steel members with three full turns around itself. Sags or twists in the suspended system shall be adjusted. Damaged or faulty parts shall be replaced.

3.2.2 Main Runners

Main runner channels shall be installed in accordance with ASTM C 754. Hanger wire shall be saddle-tied to runner channels, and the end of hanger wires shall be twisted three times around itself in 1-1/2 inches. Main runners shall not come in contact with abutting masonry or concrete walls and partitions. Main runners shall be located within 6 inches of the paralleling wall to support the ends of cross furring.

3.2.3 Furring Channels

Furring channels shall be spaced in accordance with ASTM C 841 for the type of lath used. Furring channels shall be securely saddle-tied to the runner channels and to structural supports at each crossing with tie wire, hairpin clips, or equivalent clips or fastenings. Furring channels shall be located within 2 inches of parallel walls and beams, and 1/2 inch from abutting walls. When gypsum lath is used on ceilings, hat-shaped sheetmetal furring channels may be used in lieu of 3/4 inch rolled steel furring channels. Gypsum lath shall be screw-applied at 8 inches on centers along supports and not less than 3/8 inch from edges of lath.

3.3 LATHING

3.3.1 Metal Lath on Soffits

Lath on unrestrained soffits shall not be turned down at junction with wall.

3.3.1.1 Side and End Laps

Side and end laps of metal plaster bases shall be performed in accordance with ASTM C 841 for flat lath and ribbed lath.

3.3.1.2 Chases and Recesses

Chases and recesses shall be lathed for plastering. Openings over 12 inches wide shall be bridged with furring channels spaced 12 inches on centers. Openings 12 inches wide and less do not need to be bridged. Lath shall extend 3 inches beyond the edges of opening. Lath shall be securely fastened by nailing or tying. Lath shall be tied or clipped to bridging channels, and shall be laced along longitudinal joints.

3.4 OPENINGS

Reinforcement shall be provided at corners of openings in plastered areas extending 12 inches or more in any dimension by securing striplath diagonally at corners. Striplath shall be at least 6 inches wide by 16 inches long. Shorter lengths shall be used to preclude lapping striplath. Striplath shall be secured to lathing without extending fastenings into or around supporting members. Where plaster is applied directly to concrete or masonry surfaces, striplath shall be secured to the concrete or masonry.

3.4.1 Steel Frames

Steel frames shall be securely attached through built-in anchors to the nearest stud on each side of opening with tie wire, bolts, screws, or welding or bracing where bracing is specified. Steel frames shall be grouted solid with plaster grout and a groove shall be formed within the frame returns to receive lath and plaster.

3.4.2 Wood Frames

Wood frames shall be securely attached to the nearest stud in frame partitions and to wood bucks built into the solid partition. Sizes shall be as indicated for each type and size of wall or partition.

3.4.3 Soffit Openings

Framing shall be provided for soffit openings and supplemental supporting

members for items mounted in soffit or attached to soffit suspension system. Frames for openings shall be secured to lath support members. Frames provided with expanded metal flanges shall be secured to lath. Intermediate structural members shall be provided for attachment or suspension of support members.

3.5 INSTALLATION OF ACCESSORIES

Accessories shall be installed in standard lengths level and plumb to straight lines and as indicated on drawings. Fastenings shall be spaced not over 12 inches on centers for single-flanged accessories and not over 24 inches on centers on each flange of double-flanged accessories. Accessories shall be mitered or coped at corners, or prefabricated corners shall be used. Joints in straight runs shall be formed with splice or tie plates.

3.5.1 Casing Beads

Casing beads shall be installed at the joints of dissimilar base materials in the same plane and at exposed edges of plaster including junctions of walls and ceilings except that beads shall not be installed at restrained ceilings abutting plastered surfaces. At the perimeter of unrestrained suspended ceilings, the casing bead shall be secured to the ceiling to provide a 3/8 inch opening between the abutting surfaces. The opening shall be sealed prior to plastering with sealant as specified in Section 07920 CAULKING AND SEALANTS.

3.5.2 Expansion and Control Joint Beads

Expansion joint beads shall be installed as control joints in plasterwork at the locations indicated. Plaster base shall not be run continuous through control joints. Additional supports shall be installed as required to support the beads.

3.5.3 Metal Trim

Metal trim shall be installed where indicated and as required to complete the plaster work.

3.6 PLASTER THICKNESS AND SURFACE EVENNESS

Plaster thickness and surface evenness shall be controlled by grounds or screeds of metal, wood, or plaster. Application of cement plaster shall be in accordance with ASTM C 926. Wood grounds are specified under Section 06100 ROUGH CARPENTRY.

3.6.1 Metal Grounds and Screeds

Metal grounds shall be used for securing trim items, and for finished corners and terminations. Metal screeds shall be installed for base screeds when wood or metal grounds are not required. Temporary screeds shall be installed when permanent screeds or grounds cannot be used. On completion of approved base coats, temporary screeds shall be removed and voids immediately filled with plaster.

3.6.2 Plaster Screeds

Plaster screeds shall be used within the plastered areas to supplement wood and metal grounds and screeds.

3.7 PROPORTIONS AND MIXING

3.7.1 Base Coat

Base coat shall be proportioned and mixed in accordance with ASTM C 926 coat L.

3.7.2 Portland-Cement-Plaster Finish

The finish coat shall be proportioned and mixed in accordance with ASTM C 926, coat FL.

3.8 MACHINE APPLICATION

A plastering machine may be used for the application of scratch and brown coats. Plaster for machine application shall be a special plaster compounded and packaged by the manufacturer for this purpose. Slump cone equipment shall be present on the jobsite when base-coat plastering begins, and until completion. Testing of the mix shall be the responsibility of the Contractor, but equipment shall be available for use by the Government. Additional water shall not be added to the mix to allow pumping through extended hose lines to the plastering nozzle. The amount of water added to each batch of plaster shall be that quantity which results in a plaster slump of not more than 3 inches for gypsum and 2-1/2 inches for portland cement using a standard plaster slump cone or 6 inches for gypsum and 5 inches for portland cement using a concrete slump cone. Application of plaster shall conform to the provisions of ASTM C 842.

3.9 Quality Control

Fluidity or stiffness of plaster shall be tested with a standard 2 by 4 by 6 inch plaster slump testing cone or by a 4 by 8 by 12 inch concrete slump testing cone. Method of making slump test shall be as follows:

a. Place cone on center of dry base plate located on a level, firm surface. Hold cone tightly against plate.

b. Fill the cone with plaster obtained from the hose or nozzle, without air on the nozzle, puddling with tamping rod during the operation to eliminate air bubbles or voids.

c. Screed plaster level with top of cone.

d. Lift cone straight up from base plate in a slow and uniform motion, and place it on the base plate next to plaster sample.

e. Lay a straightedge across top of cone, being careful not to disturb or jostle the plate, and measure the slump in inches from the bottom of the straightedge to the top of the plaster sample.

3.10 APPLICATION OF FINISHES

The finish coat shall be applied in accordance with ASTM C 842. The finish coat shall be omitted back of projecting bases, wainscots, structural-glass wall finish, cabinets, chalkboards, tackboards, bulletin boards, acoustic treatments, fixed equipment, and other locations where indicated. Finish coats shall not be applied above wainscots until wainscots have been installed.

3.10.1 Portland-Cement-Plaster Finish Coat

Portland-cement-plaster finish coat shall be applied over plaster cement base coats in accordance with ASTM C 926. The finish coat shall be floated to a true and even surface free from rough areas, checks, or other blemishes.

3.11 PATCHING

Plaster showing oversanding, cracks, blisters, pits, checks, discoloration or other defects is not acceptable. Defective plaster work shall be removed and replaced with new plaster at the expense of Contractor. Patching of defective work will be permitted only when approved by the Contracting Officer. Patching shall match existing work in texture and color.

3.12 SAMPLES OF COMPLETED WORK

Samples of completed work may be taken by the Contracting Officer at any time for laboratory inspection and tests to determine conformance.

-- End of Section --

SECTION TABLE OF CONTENTS

DIVISION 09 - FINISHES

SECTION 09214

PREFABRICATED GLASS REINFORCED CEMENT MEMBERS

08/94

PART 1 GENERAL

1.1 DESCRIPTION OF WORK
1.1.1 Work Included
1.1.2 REFERENCES
1.2 SUBMITTALS
1.3 DELIVERY, STORAGE AND HANDLING
1.3.1 Delivery
1.3.2 Storage
1.4 JOB CONDITIONS
1.5 WARRANTY

PART 2 PRODUCTS

2.1 PREFABRICATED GLASS REINFORCED CEMENT MEMBERS
2.1.1 Manufacturers
2.1.2 Description
2.1.3 Material Characteristics (Minimum Values)
2.2 MATERIALS RELATED WITH PREFABRICATED GLASS REINFORCED CEMENT MEMBERS
2.2.1 Nongalvanized Steel Shapes
2.2.2 Galvanized Steel Shapes
2.2.3 Anchors and Fasteners
2.2.4 Joint Treatment Materials
2.2.5 Miscellaneous Materials
2.3 FABRICATION
2.3.1 Molds
2.3.2 Preparation for Work of Other Trades
2.3.3 Mixing Cement and Placing Glass Fiber Reinforcement
2.3.4 Curing
2.3.5 Identification

PART 3 EXECUTION

3.1 INSPECTION
3.2 PREPARATION
3.3 INSTALLATION
3.3.1 General
3.3.2 Columns
3.3.3 Finishing Joints and Fasteners
3.4 ADJUSTMENT AND CLEANING

-- End of Section Table of Contents --

SECTION 09214

PREFABRICATED GLASS REINFORCED CEMENT MEMBERS
08/94

PART 1 GENERAL

1.1 DESCRIPTION OF WORK

1.1.1 Work Included

Design, fabricate, deliver, and install cove members, complete and including:

a. Internal framing, adhesives, and other components required for complete fabrication and installation.

b. Preparation of prefabricated glass reinforced cement members for work of other trades.

c. Joint reinforcement and fastener concealment (taping and bedding).

1.1.2 REFERENCES

The publications listed below form a part of this specification to the extent referenced. The publications are referred to in the text by the basic designation only.

AMERICAN SOCIETY FOR TESTING AND MATERIALS (ASTM)

ASTM A 36	1991 Specification for Structural Steel
ASTM A 307	1991 Specification for Carbon Steel Bolts and Studs, 60,000 psi Tensile Strength
ASTM E 84	1991 Test Method for Surface Burning Characteristics of Building Materials.
ASTM G 23	1990 Practice for Operating Light-Exposure Apparatus (Xenon-Arc Type) With and Without Water for Exposure of Nonmetallic Materials

1.2 SUBMITTALS

Government approval is required for submittals with a "GA" designation; submittals having an "FIO" designation are for information only. The following shall be submitted in accordance with Section 01300 SUBMITTAL PROCEDURES:

SD-01, Data

Prefabricated Glass Reinforced Cement Members; FIO.

Manufacturer's specifications and technical data for prefabricated glass reinforced cement members, joint reinforcement and fastener concealment components, anchors, and adhesives, including test data substantiating

conformance with requirements specified and applicable Material Safety Data Sheets.

SD-04, Drawings

Prefabricated Glass Reinforced Cement Members; GA.

Show prefabricated glass reinforced cement member locations, sizes, and shapes; anchorage and details; concealed internal framing components; proposed jointing arrangements.

SD-09, Reports

Provide from independent testing laboratories acceptable to Contractor and employed at expense of finished product manufacturer under his own trade name. Include:

a. Shell thickness.

b. Weight.

c. Flexural strength.

d. Tensile strength.

e. Compressive strength.

f. Density.

g. Hardness.

h. Flammability.

i. Glass fiber content.

SD-13, Certificates

Prefabricated Glass Reinforced Cement Members; FIO.

Provide manufacturer's certificate stating that product formulation includes glass fiber long strand continuous filament and that each unit is free of combustible content.

SD-14, Samples

Prefabricated Glass Reinforced Cement Members; GA.

Provide samples of portions of full size units showing specified surface texture, jointing, internal fastening methods, and other detailing required. Samples will review for workmanship and finish only. All other requirements to meet contract requirements are responsibility of Contractor.

1.3 DELIVERY, STORAGE AND HANDLING

1.3.1 Delivery

Deliver, store, and handle units in conformance with manufacturer's instructions.

1.3.2 Storage

Store inside building, under cover and out of water.

1.4 JOB CONDITIONS

Coordinate unit delivery and installation with work of other trades. Do not proceed with installation until building is sufficiently enclosed and ambient conditions are adequately controlled to prevent moisture and weather deterioration of units. Maintain minimum uniform temperature of 60 degrees F. in installation areas before, during, and after installation of prefabricated glass reinforced cement members.

1.5 WARRANTY

Two year defect free material and workmanship warranty issued jointly from Contractor and manufacturer of prefabricated glass reinforced cement members from date of substantial completion.

a. Contractor and manufacturer agree to replace, at no additional cost to Owner, prefabricated glass reinforced cement members which exhibit defects in materials and workmanship within warranty period.

b. Base warranty on installation methods conforming to manufacturer's recommendations and instructions.

c. Warranty does not cover damage to members caused by structural, mechanical, and electrical defects, or defects of adjacent materials furnished and installed by other trades.

PART 2 PRODUCTS

2.1 PREFABRICATED GLASS REINFORCED CEMENT MEMBERS

2.1.1 Manufacturers

a. Casting Designs, Inc., Fort Worth, TX 800-443-3550.

b. Custom Castings, Fort Worth, TX 800-234-1987.

c. GRG Southwest, Grapevine, TX (817)329-0329.

d. Plasterglas, Inc., Omaha, NE (402) 455-0652.

2.1.2 Description

Glass fiber reinforced cement, of required shapes as detailed on Drawings and thickness required for conditions and usage indicated. Include required connections, reinforcements, provisions for work of other trades (as indicated on final shop drawings), anchors and accessories.

2.1.3 Material Characteristics (Minimum Values)

a. Flexural Strength: 1,500 to 1,800 psi.

b. Flexural Modulus of Elasticity: 2 x 105 psi.

c. Compressive Strength: Over 5,000 psi.

d. Density: 110 pcf.

e. Panel Weight: 1 psf at 1/8 inch thickness.

f. Burning Characteristics: Flame Spread 0, Smoke Developed 10, Fuel Contribution 10; ASTM E 84, Class 1.

g. Accelerated Weathering Stability: No significant loss in strength or change in appearance after 200 hours; ASTM G 23.

h. Color: Natural White.

i. Long Term Aging: Laboratory tests indicate that glass composites do not exhibit long term fall off in strength which is characteristic of Portland Cement fiberglass deposits.

2.2 MATERIALS RELATED WITH PREFABRICATED GLASS REINFORCED CEMENT MEMBERS

2.2.1 Nongalvanized Steel Shapes

ASTM A 36; size and shapes required; shop applied zinc primer finish.

2.2.2 Galvanized Steel Shapes

16 gage minimum steel of size and shape required; fabricated from zinc coated commercial quality carbon steel sheets with 0.20% minimum copper content in accordance with Section 07600 "Flashing and Sheet Metal".

2.2.3 Anchors and Fasteners

a. Bolts: ASTM A 307; size required.

b. Self-Tapping Metal Screws: Comply with Gypsum Association GA-216, of required sizes. Use MILCOR Tite-Lok type fasteners for application to light-gage framing members.

2.2.4 Joint Treatment Materials

a. Joint Tape: 100% fiberglass joint tape.

b. Joint Compound: As recommended by glass reinforced cement manufacturer, for exterior exposure.

2.2.5 Miscellaneous Materials

a. General: Provide auxiliary materials for work of types and grades recommended by manufacturer.

b. Adhesive: Special adhesive recommended for laminating cement plaster.

2.3 FABRICATION

2.3.1 Molds

Fabricate to required sizes and shapes with linings for uniformly smooth textured surfaces to receive field applied finishes shown on Drawings, without deleterious waves, warp, or distortions. Use mold materials of

composition that will not affect reinforced cement and to maintain shapes during mixing and placement of reinforced cement and inserts.

2.3.2 Preparation for Work of Other Trades

Include blockouts, reinforcements, and supports for work of other trades, as indicated on final shop drawings.

2.3.3 Mixing Cement and Placing Glass Fiber Reinforcement

Mix cement with additives to provide cement of required materials characteristics. Coordinate placement of cement and glass fiber to provide reinforced members of required sizes and shapes, of adequate thickness, reinforced to be self-supporting and also to support inserts furnished and installed by other trades, and with exposed surfaces finished as required and free of warp, waves, buckles, cracks and other visible or deleterious defects, ready for application of applied finishes. Bevel surfaces at joints to permit application of joint reinforcing taping and bedding.

2.3.4 Curing

After placement of cement and glass fiber reinforcement in molds, and after cement has set and become hard, remove hardened members from molds and store for curing and aging. Cure and age members under proper conditions of temperature and moisture.

2.3.5 Identification

Mark each unit on unexposed side, in accordance with marks shown on final shop drawings.

PART 3 EXECUTION

3.1 INSPECTION

Inspect areas and conditions under which prefabricated glass reinforced cement members are to be installed. Notify Contracting Officer in writing of unsatisfactory conditions and defective construction. Do not proceed with installation until unsatisfactory conditions and defective construction have been corrected. Starting installation constitutes acceptance of areas and conditions as satisfactory for installation of prefabricated glass fiber reinforced cement members by Contractor, who shall correct damage and defective and unacceptable work at no additional cost to Owner.

3.2 PREPARATION

Coordinate installation with work of other trades. Verify reference points and elevations provided by Contractor for installation of members. Layout members from reference points and elevations provided by Contractor. Refer discrepancies to Contractor in writing.

3.3 INSTALLATION

3.3.1 General

Install prefabricated glass reinforced cement members in required locations, plumb, level, sloped and square, in required planes with related surfaces, securely anchored in place.

3.3.2 Columns

a. Secure base of columns to floors with clip angles as approved by manufacturer.

b. Spread adhesive over flanges of both sections of column covers and press covers together over structural columns.

c. Secure covers with straps located 60 inches maximum apart and 24 inches maximum from ends of column for 24 hours.

d. Remove straps. Tape and float seams, joints, and fasteners, and sand smooth to exhibit one-piece construction ready to receive field applied finishes indicated on Drawings.

3.3.3 Finishing Joints and Fasteners

a. Apply treatment of joints, fastener heads, surface defects, and elsewhere as required to prepare work for decoration. Prefill open joints and rounded or beveled edges. Apply joint tape at joints between units.

b. Apply joint compound in manufacturer recommended number of coats, and sand between last two coats and after last coat.

3.4 ADJUSTMENT AND CLEANING

Remove and replace defective prefabricated glass reinforced cement members. Clean exposed surfaces of members and adjacent surfaces soiled or damaged during work of this Section. Clean up debris caused by work of this Section, keeping premises clean and neat at all times.

-- End of Section --

SECTION TABLE OF CONTENTS

DIVISION 09 - FINISHES

SECTION 09250

GYPSUM WALLBOARD

01/94

PART 1 GENERAL

1.1 REFERENCES
1.2 SYSTEM DESCRIPTION
1.2.1 Fire-Rated Construction
1.2.2 Pressurized Enclosures
1.3 SUBMITTALS
1.4 QUALIFICATIONS
1.5 DELIVERY, STORAGE AND HANDLING
1.6 ENVIRONMENTAL CONDITIONS

PART 2 MATERIALS

2.1 NON-LOADBEARING STUD WALLS
2.1.1 Studs
2.1.2 Runner Tracks
2.2 SUSPENDED CEILING FRAMING
2.3 GYPSUM BOARD
2.3.1 Fire-Rated Gypsum Board
2.3.2 Water-Resistant Gypsum Board
2.3.3 Exterior Gypsum Soffit Board
2.3.4 Exterior Sheathing Board
2.4 ACCESSORIES
2.4.1 Taping and Embedding Compound
2.4.2 Finishing or Topping Compound
2.4.3 All-Purpose Compound
2.4.4 Joint Tape
2.4.5 Nails
2.4.6 Screws
2.4.7 Adhesives
2.4.8 Hangers
2.4.9 Fastenings
2.4.9.1 Tie Wire
2.4.9.2 Clips

PART 3 EXECUTION

3.1 INTERIOR WALL FRAMING
3.1.1 Wall Openings
3.1.2 Wall Control Joints
3.2 SUSPENDED CEILING FRAMING
3.2.1 Hangers
3.2.2 Main Runners
3.2.3 Furring Channels
3.2.4 Ceiling Openings
3.2.5 Light Fixtures

3.2.6 Control Joints
3.3 APPLICATION OF GYPSUM BOARD
3.3.1 Two-Ply Gypsum Board
3.3.2 Adhesively-Applied Gypsum Board
3.4 TAPING AND FINISHING
3.5 FIRE-RESISTANT ASSEMBLIES
3.6 PATCHING

-- End of Section Table of Contents --

SECTION 09250

GYPSUM WALLBOARD
01/94

PART 1 GENERAL

1.1 REFERENCES

The publications listed below form a part of this specification to the extent referenced. The publications are referred to in the text by basic designation only.

AMERICAN SOCIETY FOR TESTING AND MATERIALS (ASTM)

ASTM A 580	(1991b) Stainless and Heat Resisting Steel Wire
ASTM A 853	(1991) Steel Wire, Carbon, for General Use
ASTM C 36	(1993) Gypsum Wallboard
ASTM C 79	(1992) Gypsum Sheathing Board
ASTM C 475	(1989) Joint Compound and Joint Tape for Finishing Gypsum Board
ASTM C 514	(1990) Nails for the Application of Gypsum Board
ASTM C 557	(1993) Adhesive for Fastening Gypsum Wallboard to Wood Framing
ASTM C 630	(1993) Water-Resistant Gypsum Backing Board
ASTM C 645	(1992) Non-Load (Axial) Bearing Steel Studs, Runners (Track), and Rigid Furring Channels for Screw Application of Gypsum Board
ASTM C 754	(1988) Installation of Steel Framing Members to Receive Screw-Attached Gypsum
ASTM C 840	(1988) Application and Finishing of Gypsum Board
ASTM C 931	(1992) Exterior Gypsum Soffit Board
ASTM C 1002	(1993) Steel Drill Screws for the Application of Gypsum Board or Metal Plaster Bases

FACTORY MUTUAL ENGINEERING AND RESEARCH (FM)

FM P8016	(1993) Specification Tested Products Guide

FEDERAL SPECIFICATIONS (FS)

FS QQ-N-281	(Rev D; Am 2) Nickel-Copper Alloy Bar, Rod, Plate, Sheet, Strip, Wire, Forgings and Structural and Special Shaped Sections

GYPSUM ASSOCIATION (GA)

GA 600	(1992) Fire Resistance Design Manual

UNDERWRITERS LABORATORIES (UL)

UL-05	(1993; supple) Fire Resistance Directory

1.2 SYSTEM DESCRIPTION

1.2.1 Fire-Rated Construction

Joints of fire-rated gypsum board enclosures shall be closed and sealed in accordance with UL requirements, and as required to meet pressurization requirements. Penetrations through rated partitions and ceilings shall be sealed tight with rated firestopping materials. Fire ratings shall be as indicated.

1.2.2 Pressurized Enclosures

Pressurized fire-rated gypsum board enclosures shall allow the mechanical and electrical life-safety systems to operate in accordance with the design intent. Air pressure within elevator shaft shall be 7.5 pounds per square foot. Air pressure within stair shaft shall be 5.0 pounds per square foot. Maximum mid-span deflection shall be L/360.

1.3 SUBMITTALS

Government approval is required for submittals with a "GA" designation; submittals having an "FIO" designation are for information only. The following shall be submitted in accordance with Section 01300 SUBMITTAL PROCEDURES:

SD-04 Drawings

Steel Framing; FIO. Control Joints; FIO. Fire-Resistant Assemblies; FIO.

Drawings and installation details for ceiling framing, furring, special wall framing, and framed openings in walls and ceilings.

SD-13 Certificates

Gypsum Wallboard; FIO. Water-Resistant Gypsum Board; FIO. Steel Framing; FIO.

Certificates stating that the steel framing and gypsum wallboard meet the specified requirements.

SD-14 Samples

1.4 QUALIFICATIONS

Manufacturer shall specialize in manufacturing the types of material specified and shall have a minimum of 10 years of documented successful

experience. Installer shall specialize in the type of gypsum board work required and shall have a minimum of 5 years of documented successful experience.

1.5 DELIVERY, STORAGE AND HANDLING

Materials shall be delivered in original containers bearing the name of manufacturer, contents, and brand name. Materials shall be stored off the ground in a weathertight structure for protection. Gypsum boards shall be stacked flat, off floor and supported to prevent sagging and warpage. Adhesives and joint materials shall be stored in accordance with manufacturer's printed instructions. Damaged or deteriorated materials shall be removed from jobsite.

1.6 ENVIRONMENTAL CONDITIONS

Environmental conditions for application and finishing of gypsum board shall be in accordance with ASTM C 840. During the application of gypsum board without adhesive, a room temperature of not less than 40 degrees F shall be maintained. During the application of gypsum board with adhesive, a room temperature of not less than 50 degrees F shall be maintained for 48 hours prior to application and continuously afterwards until completely dry. Building spaces shall be ventilated to remove water not required for drying joint treatment materials. Drafts shall be avoided during dry hot weather to prevent materials from drying too rapidly.

PART 2 MATERIALS

2.1 NON-LOADBEARING STUD WALLS

2.1.1 Studs

Studs for non-loadbearing walls shall conform to ASTM C 645. Studs shall be prefabricated 18 gauge steel, C-shaped, punched web for utility access, G60 hot-dip galvanized after fabrication, or truss-designed studs fabricated of 16 gauge steel angles with a single No. 7 gauge rod forming an open-web truss-like pattern between flanges with all points contact welded.

2.1.2 Runner Tracks

Floor and ceiling runner tracks shall conform to ASTM C 645. Tracks shall be prefabricated, U-shaped with minimum 7/8 inch flanges, unpunched web, gauge to match studs, G60 hot-dip galvanized after fabrication.

2.2 SUSPENDED CEILING FRAMING

Main carrying channels and cross furring members for suspended gypsum board ceilings shall conform to ASTM C 645. Carrying channels shall be formed from 16 gauge cold-rolled steel, hot-dipped galvanized after fabrication, 1-1/2 x 3/4 inch deep. Furring members shall be formed from cold-rolled steel, hot-dip galvanized after fabrication, 3/4 inch high x 3/4 inch deep.

2.3 GYPSUM BOARD

Gypsum board shall have square-cut ends, tapered or beveled edges and shall be maximum possible length. Each of the following types of gypsum board shall installed in locations as indicated on the Drawings.

2.3.1 Fire-Rated Gypsum Board

Fire-rated gypsum board shall conform to ASTM C 36, and shall be Type X, 48 inches wide, unless otherwise indicated on the Drawings.

2.3.2 Water-Resistant Gypsum Board

Water-resistant gypsum board shall conform to ASTM C 630, Type X, with water-resistant paper faces, paintable surfaces, and shall be 48 inch width and maximum permissible length.

2.3.3 Exterior Gypsum Soffit Board

Exterior gypsum soffit board shall conform to ASTM C 931, Type X, 48 inches wide.

2.3.4 Exterior Sheathing Board

Exterior sheathing board shall conform to ASTM C 79, Type X, shall have water-resistant core, water-repellant paper faces each side, tongue-and-groove edges, and shall be 48 inches wide.

2.4 ACCESSORIES

2.4.1 Taping and Embedding Compound

Taping and embedding compound shall conform to ASTM C 475. Compound shall be specifically formulated and manufactured for use in embedding tape at gypsum wallboard joints and fastener heads, and shall be compatible with tape and substrate.

2.4.2 Finishing or Topping Compound

Finishing or topping compound shall conform to ASTM C 475. Compound shall be specifically formulated and manufactured for use as a finishing compound for gypsum board.

2.4.3 All-Purpose Compound

All-purpose compound shall be specifically formulated and manufactured to use as a taping and finishing compound, and shall be compatible with tape and substrate.

2.4.4 Joint Tape

Joint tape shall conform to ASTM C 475 and shall be as recommended by gypsum board manufacturer.

2.4.5 Nails

Nails shall conform to ASTM C 514. Nails shall be hard-drawn low or medium-low carbon steel, suitable for intended use.

2.4.6 Screws

Screws shall conform to ASTM C 1002. Screws shall be self-drilling and self-tapping steel, Type S for wood or light-gauge steel framing.

2.4.7 Adhesives

Adhesives shall conform to ASTM C 557. Adhesives shall be formulated to bond gypsum board to wood framing members. For securing gypsum board to metal framing, adhesive shall be as recommended by gypsum board manufacturer.

2.4.8 Hangers

Suspended ceiling runner channel hangers shall be soft, annealed steel wire not less than 0.1620 inch nominal diameter, conforming to ASTM A 853 or flat iron or steel straps, at least 3/32 by 7/8 inch size, coated with zinc, cadmium, or rust-inhibiting paint.

2.4.9 Fastenings

Tie wire, clips, rings, and other fastenings shall be corrosion-resisting steel conforming to ASTM A 580, composition 302, 304, or 316, Condition A, or nickel-copper alloy conforming to FS QQ-N-281, Class A or B, annealed condition except that walls, partitions, and other vertical surfaces not incorporated in ceiling construction may be erected with soft, annealed steel conforming to ASTM A 853.

2.4.9.1 Tie Wire

Tie wire for constructing partitions and vertical furring, for securing metal lath to supports, and for lacing shall be not less than 0.0475 inch diameter. Tie wire for other applications shall be not less than 0.0625 inch diameter.

2.4.9.2 Clips

Clips used in lieu of tie wire for securing the furring channels to the runner channels in ceiling construction shall be made from strip not less than 1/8 inch thick or shall be hairpin clip, formed of wire not less than 0.01620 inch nominal diameter. Other clips and rings or fastenings of similar materials shall be equivalent in holding power to that provided by tie wire for the specific application.

PART 3 EXECUTION

3.1 INTERIOR WALL FRAMING

Steel framing and furring members shall be installed in accordance with ASTM C 754. Members shall be in alignment with spacings not to exceed the maximum spacings indicated on drawings. Runners shall be aligned accurately at the floor and ceiling and securely anchored.

3.1.1 Wall Openings

The framing system shall provide for the installation and anchorage of the required subframes or finish frames for wall openings at doors, pass-through openings, and access panels. Partitions abutting continuous suspended ceilings shall be strengthened for rigidity at rough openings of more than 30 inches wide. Studs at openings shall be 18 or 20 gauge minimum bare metal thickness and spot grouted at jamb anchor inserts. Double studs shall be fastened together with screws and secured to floor and overhead runners. Two studs strapped together shall be used for framing solid-core doors, doors over 3 feet 0 inches wide and extra-heavy doors such as X-ray room doors.

3.1.2 Wall Control Joints

Control joints for expansion and contraction shall be constructed with double studs installed 1/2 inch apart in interior walls or wall furrings where indicated on drawings, but shall not exceed 30 feet between control joints. Ceiling-height door frames may be used as vertical control joints. Door frames of less than ceiling height may be used as control joints only if standard control joints extend to ceiling from both corners of top of door frame. Control joints between studs shall be filled with firesafing insulation.

3.2 SUSPENDED CEILING FRAMING

Suspended ceiling system framing shall be installed in accordance with ASTM C 754. Where water-resistent gypsum board is used in ceiling, framing shall be 12 inches on center in accordance with the manufacturer's recommendation.

3.2.1 Hangers

Hangers shall be spaced not more than 48 inches along runner channels and 36 inches in the other direction or 42 inches in both directions unless otherwise indicated. Locations of hanger wires shall be coordinated with other work. Hangers at ends of runner channels shall be located not more than 6 inches from wall. Hanger wire shall be looped around bottom chord of open-web steel joists, structural steel members, or center I-beam clamps with three full turns around itself. Sags or twists which develop in the suspended system shall be adjusted. Damaged or faulty parts shall be replaced.

3.2.2 Main Runners

Main runner channels shall be installed in accordance with ASTM C 754. Hanger wires shall be double strand saddle-tied to runner channels and the ends of hanger wire shall be twisted three times around itself. Main runners shall be located to within 6 inches of the paralleling wall to support the ends of cross furring. Main runners shall not come in contact with abutting masonry or concrete walls. Where main runners are spliced, ends shall be overlapped 12 inches with flanges of channels interlocked, and shall be securely tied at each end of splice with wire looped twice around the channels.

3.2.3 Furring Channels

Furring channels shall be spaced in accordance with ASTM C 754. Furring channels shall be secured to the runner channels and to structural supports at each crossing with tie wire, hairpin clips, or equivalent fastenings. Furring channels shall be located within 2 inches of parallel walls and beams, and shall be cut 1/2 inch short of abutting walls.

3.2.4 Ceiling Openings

Support members shall be provided as required at ceiling openings for access panels, recessed light fixtures, and air supply or exhaust. Support members shall be not less than 1-1/2 inch main runner channels and vertically installed suspension wires or straps shall be located to provide at least the minimum support specified herein for furring and wallboard attachment. Intermediate structural members not a part of the structural system, shall be provided for attachment or suspension of support members.

3.2.5 Light Fixtures

Light fixtures shall not be supported directly from suspended ceiling runners. Hanger wires for recessed or surface mounted light fixtures shall be anchored to structure at four corners of light fixtures, and additional wires shall be provided at appropriate locations to carry the weight of light fixtures.

3.2.6 Control Joints

Control joints for expansion and contraction shall be located where indicated on drawings, and shall not exceed 2500 square feet in area nor more than 50 feet in either direction.

3.3 APPLICATION OF GYPSUM BOARD

Gypsum board shall be installed in accordance with ASTM C 840 and as specified. Edges and ends of gypsum boards shall be cut to obtain neat fitting joints. End joints of adjoining boards shall be staggered, and shall be staggered on opposite sides of wall. Boards shall be applied with moderate contact without forcing in place. Holes for pipes, fixtures or other small openings shall be cut with a tool which will provide a neat fit. Screws shall be driven so that the heads are slightly below the plane of paper face. Fracturing the paper face or damaging the core shall be avoided. Trim shall be installed at external and internal angles formed by the intersecting gypsum board surfaces with other surfaces. Corner beads shall be installed to vertical and horizontal corners in accordance with manufacturer's published instructions. Gypsum board shall be type "x" as specified herein, unless otherwise indicated on the Drawings. Provide type "x" water-resistant gypsum board, exterior gypsum soffit board, and exterior sheathing board in locations as indicated on the Drawings.

3.3.1 Two-Ply Gypsum Board

Second layer of gypsum board shall be applied perpendicular to first layer with joints staggered and secured with mechanical fasteners and adhesive. The use of adhesive shall be in accordance with ASTM C 840.

3.3.2 Adhesively-Applied Gypsum Board

Walls scheduled to receive adhesively-applied gypsum board shall be dry, free of dust, oil, or form release agents, protrusions or voids, or foreign matter that would affect a proper bond.

3.4 TAPING AND FINISHING

Gypsum board taping and finishing shall be performed in accordance with ASTM C 840. Boards shall be kept free of dirt, oil and other foreign matter that could cause a lack of bond. Screw heads, dents, gouges, and cut-outs shall be filled with joint compound and sanded. Accessories at exposed joints, edges, corners, openings, and similar locations shall be taped, floated with joint compound, and sanded to produce surfaces ready for gypsum board finishes.

3.5 FIRE-RESISTANT ASSEMBLIES

Gypsum wallboard construction for fire-rated assemblies shall be in accordance with UL-05, FM P8016 or GA 600 for the design number indicated

on drawings.

3.6 PATCHING

Surface defects and damage shall be corrected as required to leave gypsum board smooth, uniform in appearance, and ready to receive finish as specified.

-- End of Section --

SECTION TABLE OF CONTENTS

DIVISION 09 - FINISHES

SECTION 09310

CERAMIC TILE

10/94

PART 1 GENERAL

1.1 REFERENCES
1.2 SUBMITTALS
1.3 DELIVERY AND STORAGE
1.4 ENVIRONMENTAL REQUIREMENTS
1.5 WARRANTY

PART 2 PRODUCTS

2.1 TILE
2.1.1 Mosaic and Wall Tile
2.2 SETTING-BED
2.2.1 Aggregate for Concrete Fill
2.2.2 Portland Cement
2.2.3 Sand
2.2.4 Hydrated Lime
2.2.5 Metal Lath
2.2.6 Reinforcing Wire Fabric
2.3 WATER
2.4 MORTAR, GROUT, AND ADHESIVE
2.4.1 Latex-Portland Cement Mortar
2.4.2 Ceramic Tile Grout
2.4.3 Organic Adhesive
2.4.4 Epoxy Resin Grout
2.4.5 Cementitious Backer Board
2.5 MARBLE THRESHOLDS

PART 3 EXECUTION

3.1 PREPARATORY WORK AND WORKMANSHIP
3.2 GENERAL INSTALLATION REQUIREMENTS
3.3 INSTALLATION OF WALL TILE
3.3.1 Workable or Cured Mortar Bed
3.3.2 Latex-Portland Cement Mortar
3.3.3 Organic Adhesive
3.4 INSTALLATION OF FLOOR TILE
3.4.1 Workable or Cured Mortar Bed
3.4.2 Latex-Portland Cement
3.4.3 Ceramic Tile Grout
3.4.4 Waterproofing
3.4.5 Concrete Fill
3.4.6 Cementitious Backer Board
3.5 INSTALLATION OF MARBLE THRESHOLDS
3.6 CONTROL JOINTS
3.6.1 Walls

3.6.2 Floors
3.7 CLEANING AND PROTECTING

-- End of Section Table of Contents --

SECTION 09310

CERAMIC TILE
10/94

PART 1 GENERAL

1.1 REFERENCES

The publications listed below form a part of this specification to the extent referenced. The publications are referred to in the text by basic designation only.

AMERICAN NATIONAL STANDARDS INSTITUTE (ANSI)

ANSI A108.1A	(1992) Installation of Ceramic Tile in the Wet-Set Method, with Portland Cement Mortar
ANSI A108.1B	(1992) Installation of Ceramic Tile on a Cured Portland Cement Mortar Setting Bed with Dry-Set or Latex Portland Cement Mortar
ANSI A108.4	(1992) Installation of Ceramic Tile with Organic Adhesives or Water Cleanable Tile Setting Epoxy Adhesive
ANSI A108.5	(1992) Installation of Ceramic Tile with Dry-Set Portland Cement Mortar or Latex-Portland Cement Mortar
ANSI A108.10	(1992) Installation of Grout in Tilework
ANSI A108.11	(1992) Interior Installation of Cementitious Backup Units
ANSI A118.3	(1992) Chemical Resistant, Water Cleanable Tile Setting and Grouting Epoxy and Water Cleanable Tile Setting Epoxy Adhesive
ANSI A118.4	(1992) Latex-Portland Cement Mortar
ANSI A118.6	(1992) Ceramic Tile Grouts
ANSI A118.9	(1992) Test Methods and Specifications for Cementitious Backer Units
ANSI A136.1	(1992) Organic Adhesives for Installation of Ceramic Tile
ANSI A137.1	(1988) Ceramic Tile

AMERICAN SOCIETY FOR TESTING AND MATERIALS (ASTM)

ASTM A 185	(1994) Steel Welded Wire Fabric, Plain, for Concrete Reinforcement

ASTM C 33	(1992a) Concrete Aggregates
ASTM C 144	(1993) Aggregate for Masonry Mortar
ASTM C 150	(1994) Portland Cement
ASTM C 206	(1984; R 1992) Finishing Hydrated Lime
ASTM C 207	(1991; R 1992) Hydrated Lime for Masonry Purposes
ASTM C 241	(1990) Abrasion Resistance of Stone Subjected to Foot Traffic
ASTM C 373	(1988) Water Absorption, Bulk Density, Apparent Porosity, and Apparent Specific Gravity of Fired Whiteware Products
ASTM C 648	(1984; R 1989) Breaking Strength of Ceramic Tile
ASTM C 847	(1993) Metal Lath
ASTM C 1026	(1987; R 1992) Measuring Frost Resistance of Ceramic Tile to Freeze-Thaw Cycling
ASTM C 1027	(1984; R 1990) Determining Visible Abrasion Resistance of Glazed Ceramic Tile
ASTM C 1028	(1989) Determining the Static Coefficient of Friction of Ceramic Tile and Other Like Surfaces by the Horizontal Dynamometer Pull-Meter Method

MARBLE INSTITUTE OF AMERICA (MIA)

MIA-01	(1991) Design Manual IV Dimensional Stone

TILE COUNCIL OF AMERICA (TCA)

TCA-01	(1994) Handbook for Ceramic Tile Installation

1.2 SUBMITTALS

Government approval is required for submittals with a "GA" designation; submittals having an "FIO" designation are for information only. The following shall be submitted in accordance with Section 01300 SUBMITTAL PROCEDURES:

SD-01 Data

Tile; FIO. Setting-Bed; FIO. Mortar, Grout, and Adhesive; FIO.

Manufacturer's catalog data.

SD-06 Instructions

Tile; FIO. Mortar and Grout; FIO.

Manufacturers preprinted installation and cleaning instructions.

SD-09 Reports

Testing; FIO.

Copy of results for electrical resistance tests.

SD-13 Certificates

Tile; FIO. Mortar, Grout, and Adhesive; FIO.
Certificates indicating conformance with specified requirements. A master grade certificate shall be furnished for tile.

SD-14 Samples

Tile; FIO. Accessories; FIO. Marble Thresholds; FIO.

Samples of sufficient size to show color range, pattern, type and joints.

1.3 DELIVERY AND STORAGE

Materials shall be delivered to the project site in manufacturer's original unopened containers with seals unbroken and labels and hallmarks intact. Materials shall be kept dry, protected from weather, and stored under cover.

1.4 ENVIRONMENTAL REQUIREMENTS

Ceramic tile work shall not be performed unless the substrate and ambient temperature is at least 50 degrees F and rising. Temperature shall be maintained above 50 degrees F while the work is being performed and for at least 7 days after completion of the work. When temporary heaters are used they shall be vented to the outside to avoid carbon dioxide damage to new tilework.

1.5 WARRANTY

Manufacturer's standard performance guarantees or warranties that extend beyond a 1-year period shall be provided.

PART 2 PRODUCTS

2.1 TILE

Tile shall be standard grade conforming to ANSI A137.1. Containers shall be grade sealed. Seals shall be marked to correspond with the marks on the signed master grade certificate. Tile shall be impact resistant with a minimum breaking strength for wall tile of 90 lbs and 250 lbs for floor tile in accordance with ASTM C 648. Tile for cold climate projects shall be rated frost resistant by the manufacturer as determined by ASTM C 1026. Water absorption shall be 0.5 maximum percent in accordance with ASTM C 373. Floor tile shall have a minimum static coefficient of friction of 0.5 in accordance with ASTM C 1028. Tile shall be Class III as rated by the manufacturer when tested in accordance with ASTM C 1027 for abrasion resistance as related to foot traffic. Provide tile accessories such as cove base, inside and outside corners, and bullnose pieces as indicated on the Drawings.

2.1.1 Mosaic and Wall Tile

Ceramic mosaic tile and trim shall be unglazed porcelain unpolished with sharply formed face. Tile size shall be 2 by 2 inches. Ceramic mosaic tile shall be used on the floor and wall. Color and design shall be as indicated on the Drawings.

2.2 SETTING-BED

The setting-bed shall be composed of the following:

2.2.1 Aggregate for Concrete Fill

Aggregate shall conform to ASTM C 33. Maximum size of coarse aggregate shall not be greater than one-half the thickness of concrete fill.

2.2.2 Portland Cement

Cement shall conform to ASTM C 150, Type I, white for wall mortar and gray for other uses.

2.2.3 Sand

Sand shall conform to ASTM C 144.

2.2.4 Hydrated Lime

Hydrated lime shall conform to ASTM C 206, Type S or ASTM C 207, Type S.

2.2.5 Metal Lath

Metal lath shall be flat expanded type conforming to ASTM C 847, and weighing not less than 2.5 pounds per square yard.

2.2.6 Reinforcing Wire Fabric

Wire fabric shall conform to ASTM A 185. Wire shall be either 2 by 2 inch mesh, 16/16 wire or 1-1/2 by 2 inch mesh, 16/13 wire.

2.3 WATER

Water shall be potable.

2.4 MORTAR, GROUT, AND ADHESIVE

Mortar, grout, and adhesive shall conform to the following:

2.4.1 Latex-Portland Cement Mortar

ANSI A118.4.

2.4.2 Ceramic Tile Grout

ANSI A118.6; commercial portland cement grout.

2.4.3 Organic Adhesive

ANSI A136.1, Type I.

2.4.4 Epoxy Resin Grout

ANSI A118.3.

2.4.5 Cementitious Backer Board

Cementitious backer units shall comply with ANSI A118.9.

2.5 MARBLE THRESHOLDS

Marble thresholds shall be of size required by drawings or conditions. Marble shall be Group A as classified by MIA-01. Marble shall have a fine sand-rubbed finish and shall be white or gray in color as approved by the Contracting Officer. Marble abrasion shall be not less than 12.0 when tested in accordance with ASTM C 241.

PART 3 EXECUTION

3.1 PREPARATORY WORK AND WORKMANSHIP

Surface to receive tile shall be inspected and shall conform to the requirements of ANSI A108.1A or ANSI A108.1B for surface conditions for the type setting bed specified and for workmanship. Variations of surface to be tiled shall fall within maximum values shown below:

TYPE	WALLS	FLOORS
Organic Adhesives	1/8 inch in 8 ft.	1/16 inch in 3 ft.
Latex portland cement mortar	1/8 inch in 8 ft.	1/8 inch in 10 ft.
Epoxy	1/8 inch in 8 ft.	1/8 inch in 10 ft.

3.2 GENERAL INSTALLATION REQUIREMENTS

Tile work shall not be started until roughing in for mechanical and electrical work has been completed and tested, and built-in items requiring membrane waterproofing have been installed and tested. Floor tile installation shall not be started in spaces requiring wall tile until after wall tile has been installed. Tile in colors and patterns indicated shall be applied in the area shown on the Drawings. Tile shall be installed with the respective surfaces in true even planes to the elevations and grades shown. Special shapes shall be provided as required for sills, jambs, recesses, offsets, external corners, and other conditions to provide a complete and neatly finished installation. Tile bases and coves shall be solidly backed with mortar.

3.3 INSTALLATION OF WALL TILE

Wall tile shall be installed in accordance with the TCA-01, method W244-90.

3.3.1 Workable or Cured Mortar Bed

Tile shall be installed over a workable mortar bed or a cured mortar bed at the option of the Contractor. A 4 mil polyethylene membrane, metal lath, and scratch coat shall also be installed. Workable mortar bed, materials, and installation of tile shall conform to ANSI A108.1A. Cured mortar bed

and materials shall conform to ANSI A108.1B.

3.3.2 Latex-Portland Cement Mortar

Latex-portland cement shall be used to install tile in accordance with ANSI A108.5. Latex portland cement shall be used when installing porcelain ceramic tile.

3.3.3 Organic Adhesive

Organic adhesive installation of ceramic tile shall conform to ANSI A108.4.

3.4 INSTALLATION OF FLOOR TILE

Floor tile shall be installed in accordance with TCA-01, method F-111. Shower receptors shall be installed in accordance with TCA-01, method B415-94.

3.4.1 Workable or Cured Mortar Bed

Floor tile shall be installed over a workable mortar bed or a cured mortar bed at the option of the Contractor. Workable mortar bed materials and installation shall conform to ANSI A108.1A. Cured mortar bed and materials shall conform to ANSI A108.1B.

3.4.2 Latex-Portland Cement

Latex-portland cement mortar shall be used to install tile directly over properly cured, plane, clean concrete slabs in accordance with ANSI A108.5. Latex portland cement shall be used when installing porcelain ceramic tile.

3.4.3 Ceramic Tile Grout

Ceramic Tile grout shall be prepared and installed in accordance with ANSI A108.10.

3.4.4 Waterproofing

Shower pans are specified in Section 15405 PLUMBING, GENERAL PURPOSE.

3.4.5 Concrete Fill

Concrete fill shall be composed by volume of 1 part portland cement to 3 parts fine aggregate to 4 parts coarse aggregate, and mixed with water to as dry a consistency as practicable. The fill shall be spread, tamped, and screeded to a true plane, and pitched to drains or leveled as shown. Concrete fill shall be thoroughly damp cured before application of setting-bed material . Concrete fill shall be reinforced with one layer of reinforcement, with the uncut edges lapped the width of one mesh and the cut ends and edges lapped not less than 2 inches. Laps shall be tied together with 18 gauge wire every 10 inches along the finished edges and every 6 inches along the cut ends and edges. The reinforcement shall be supported and secured in the centers of concrete fills. The mesh shall be continuous; except where expansion joints occur, mesh shall be cut and discontinued across such joints. Reinforced concrete fill shall be provided under the setting-bed where the distance between the under-floor surface and the finished tile floor surface is 2 inches or greater, and shall be of such thickness that the mortar setting-bed over the concrete fill shall be not less than 3/4 inch nor more than 1-1/4 inches thick at

any point.

3.4.6 Cementitious Backer Board

Cementitious backer units shall be installed in accordance with ANSI A108.11.

3.5 INSTALLATION OF MARBLE THRESHOLDS

Thresholds shall be installed where indicated in a manner similar to that of the ceramic tile floor. Thresholds shall be the full width of the opening. Head joints at ends shall not exceed 1/4 inch in width and shall be grouted full as specified for ceramic tile.

3.6 CONTROL JOINTS

Joints shall be formed as indicated and sealed as specified in Section 07920 JOINT SEALING.

3.6.1 Walls

Control joints shall be provided at control joints in backing material. Wherever backing material changes, a control joint shall be formed to separate the different materials.

3.6.2 Floors

Control joints shall be provided over construction joints, control joints, and expansion joints in concrete slabs. Control joints shall also be provided where tile abuts restraining surfaces such as perimeter walls, curbs and columns and at intervals of 24 to 36 feet each way in large interior floor areas and 12 to 16 feet each way in large exterior areas or areas exposed to direct sunlight or moisture. Expansion joints shall extend through setting-beds and fill.

3.7 CLEANING AND PROTECTING

Upon completion, tile surfaces shall be thoroughly cleaned in accordance with manufacturer's approved cleaning instructions. Acid shall not be used for cleaning glazed tile. Floor tile with resinous grout or with factory mixed grout shall be cleaned in accordance with instructions of the grout manufacturer. After the grout has set, tile wall surfaces shall be given a protective coat of a noncorrosive soap or other approved method of protection. Tiled floor areas shall be covered with building paper before foot traffic is permitted over the finished tile floors. Board walkways shall be laid on tiled floors that are to be continuously used as passageways by workmen. Damaged or defective tiles shall be replaced.

-- End of Section --

SECTION TABLE OF CONTENTS

DIVISION 09 - FINISHES

SECTION 09510

ACOUSTICAL CEILINGS

04/95

PART 1 GENERAL

1.1 REFERENCES
1.2 GENERAL REQUIREMENTS
1.3 SUBMITTALS
1.4 DELIVERY AND STORAGE
1.5 ENVIRONMENTAL REQUIREMENTS
1.6 SCHEDULING

PART 2 PRODUCTS

2.1 ACOUSTICAL UNITS
2.1.1 Units for Exposed-Grid System (Type 1)
2.1.2 Units for Exposed-Grid System (Type 2)
2.2 SUSPENSION SYSTEM
2.3 HANGERS
2.4 FINISHES
2.5 COLORS AND PATTERNS
2.6 CEILING ATTENUATION CLASS AND TEST

PART 3 EXECUTION

3.1 INSTALLATION
3.1.1 Suspension System
3.1.1.1 Plumb Hangers
3.1.1.2 Splayed Hangers
3.1.2 Wall Molding
3.1.3 Acoustical Units
3.2 CLEANING

-- End of Section Table of Contents --

SECTION 09510

ACOUSTICAL CEILINGS
04/95

PART 1 GENERAL

1.1 REFERENCES

The publications listed below form a part of this specification to the extent referenced. The publications are referred to in the text by basic designation only.

AMERICAN SOCIETY FOR TESTING AND MATERIALS (ASTM)

ASTM C 635	(1994) Manufacture, Performance, and Testing of Metal Suspension Systems for Acoustical Tile and Lay-In Panel Ceilings
ASTM C 636	(1992) Installation of Metal Ceiling Suspension Systems for Acoustical Tile and Lay-In Panels
ASTM E 1264	(1990) Standard Classification for Acoustical Ceiling Products
ASTM E 1414	(1991a) Standard Test for Airborne Sound Attenuation Between Rooms Sharing a Common Ceiling Plenum.

1.2 GENERAL REQUIREMENTS

Acoustical treatment shall consist of sound controlling units mechanically mounted on a ceiling suspension system. The unit size, texture, finish, and color shall be as specified. The location and extent of acoustical treatment shall be as shown on the drawings.

1.3 SUBMITTALS

Government approval is required for submittals with a "GA" designation; submittals having an "FIO" designation are for information only. The following shall be submitted in accordance with Section 01300 SUBMITTAL PROCEDURES:

SD-01 Data

Acoustical Ceiling System; FIO.

Manufacturer's descriptive data and installation instructions.

SD-04 Drawings

Acoustical Ceiling System; FIO.

Drawings shall show suspension system, method of anchoring and fastening, details, and reflected ceiling plan.

SD-14 Samples

Acoustical Units; FIO.

Two samples of each type of acoustical unit and each type of suspension grid tee section showing texture, finish, and color.

1.4 DELIVERY AND STORAGE

Materials shall be delivered to the site in the manufacturer's original unopened containers with brand name and type clearly marked. Materials shall be carefully handled and stored in dry, watertight enclosures. Immediately before installation, acoustical units shall be stored for not less than 24 hours at the same temperature and relative humidity as the space where they will be installed to assure temperature and moisture conditions.

1.5 ENVIRONMENTAL REQUIREMENTS

A uniform temperature of not less than 60 degrees F nor more than 80 degrees F and a relative humidity of not more than 70 percent shall be maintained before, during, and after installation of acoustical units.

1.6 SCHEDULING

Interior finish work such as plastering, concrete and terrazzo work shall be complete and dry before installation. Mechanical, electrical, and other work above the ceiling line shall be completed and heating, ventilating, and air conditioning systems shall be installed and operating in order to maintain temperature and humidity requirements.

PART 2 PRODUCTS

2.1 ACOUSTICAL UNITS

Acoustical units shall conform to ASTM E 1264, Class A, and the following requirements:

2.1.1 Units for Exposed-Grid System (Type 1)

Type: III/2.
NRC grade: 55 minimum when tested on mounting No. 7.
Pattern: c & d.
Nominal size: 24 by 24 inches.
Edge detail: Trimmed and butt.
Finish: Factory-applied standard finish.
LR grade: 0.80.
CAC range: Minimum 35.

2.1.2 Units for Exposed-Grid System (Type 2)

Type: III/2.
NRC grade: 55 minimum when tested on mounting No. 7.
Pattern: c & d.
Nominal size: 24 by 48 inches.
Edge detail: Trimmed and butt.
Finish: Factory-applied standard finish.
LR grade: 0.80.

CAC range: Minimum 35.

2.2 SUSPENSION SYSTEM

Suspension system shall be exposed-grid as shown on drawings, and shall conform to ASTM C 635 for intermediate-duty systems. Surfaces exposed to view shall be aluminum with or steel with a factory-applied white baked-enamel finish. Wall molding shall have a flange of not less than 15/16 inch and shall be provided with outside corner caps. Inside corner caps shall be provided where, due to the configuration of the installation, they are needed to produce a workmanlike appearance.

2.3 HANGERS

Hangers shall be galvanized steel wire. Hangers and attachment shall support a minimum 300 pound ultimate vertical load without failure of supporting material or attachment.

2.4 FINISHES

Acoustical units and suspension system members shall have manufacturer's standard textures, patterns and finishes as specified. Ceiling suspension system components shall be treated to inhibit corrosion.

2.5 COLORS AND PATTERNS

Colors and patterns for acoustical units and suspension system components shall be as indicated on the Drawings.

2.6 CEILING ATTENUATION CLASS AND TEST

Ceiling attenuation class (CAC) range of acoustical units, when required, shall be determined in accordance with ASTM E 1414. Test ceiling shall be continuous at the partition and shall be assembled in the suspension system in the same manner that the ceiling will be installed on the project. System shall be tested with all acoustical units installed.

PART 3 EXECUTION

3.1 INSTALLATION

Acoustical work shall be provided complete with necessary fastenings, clips, and other accessories required for a complete installation. Mechanical fastenings shall not be exposed in the finished work. Hangers shall be laid out for each individual room or space. Hangers shall be placed to support framing around beams, ducts, columns, grilles, and other penetrations through ceilings. Main runners and carrying channels shall be kept clear of abutting walls and partitions. At least two main runners shall be provided for each ceiling span. Wherever required to bypass an object with the hanger wires, a subsuspension system shall be installed, so that all hanger wires will be plumb.

3.1.1 Suspension System

Suspension system shall be installed in accordance with ASTM C 636, Section 13080, SEISMIC PROTECTION FOR MECHANICAL, ELECTRICAL EQUIPMENT and as specified herein. There shall be no hanger wires or other loads suspended from underside of steel decking.

3.1.1.1 Plumb Hangers

Hangers shall be plumb and shall not press against insulation covering ducts and pipes.

3.1.1.2 Splayed Hangers

Where hangers must be splayed (sloped or slanted) around obstructions, the resulting horizontal force shall be offset by bracing, countersplaying, or other acceptable means.

3.1.2 Wall Molding

Wall molding shall be provided where ceilings abut vertical surfaces. Wall molding shall be secured not more than 3 inches from ends of each length and not more than 16 inches on centers between end fastenings. Wall molding springs shall be provided at each acoustical unit in semi-exposed or concealed systems.

3.1.3 Acoustical Units

Acoustical units shall be installed in accordance with the approved installation instructions of the manufacturer. Edges of acoustical units shall be in close contact with metal supports, with each other, and in truealignment. Acoustical units shall be arranged so that units less than one-half width are minimized. Units in exposed-grid system shall be held in place with manufacturer's standard hold-down clips, if units weigh less than 1 psf or if required for fire resistance rating.

3.2 CLEANING

Following installation, dirty or discolored surfaces of acoustical units shall be cleaned and left free from defects. Units that are damaged or improperly installed shall be removed and new units provided as directed.

-- End of Section --

SECTION TABLE OF CONTENTS

DIVISION 09 - FINISHES

SECTION 09650

RESILIENT FLOORING

04/93

PART 1 GENERAL

1.1 REFERENCES
1.2 SUBMITTALS
1.3 DELIVERY AND STORAGE
1.4 ENVIRONMENTAL REQUIREMENTS
1.5 SCHEDULING
1.6 EXTRA MATERIALS

PART 2 PRODUCTS

2.1 VINYL-COMPOSITION TILE
2.2 SHEET VINYL FLOORING
2.2.1 Sheet Vinyl Flooring (without backing)
2.3 RESILIENT BASE
2.4 EDGE STRIP
2.5 ADHESIVE
2.6 POLISH

PART 3 EXECUTION

3.1 EXAMINATION/VERIFICATION OF CONDITIONS
3.2 SURFACE PREPARATION
3.3 MOISTURE TEST
3.4 INSTALLATION OF VINYL-COMPOSITION TILE
3.5 INSTALLATION OF SHEET VINYL FLOORING
3.6 INSTALLATION OF EDGE STRIPS
3.7 INSTALLATION OF RESILIENT BASE
3.8 INSTALLATION OF INTEGRAL COVED BASE
3.9 CLEANING
3.10 PROTECTION

-- End of Section Table of Contents --

SECTION 09650

RESILIENT FLOORING
04/93

PART 1 GENERAL

1.1 REFERENCES

The publications listed below form a part of this specification to the extent referenced. The publications are referred to in the text by basic designation only.

AMERICAN SOCIETY FOR TESTING AND MATERIALS (ASTM)

ASTM F 1066	(1987) Vinyl Composition Floor Tile

FEDERAL SPECIFICATIONS (FS)

FS L-F-475	(Rev A; Am 1; Int Am 3) Floor Covering Vinyl, Surface (Tile and Roll), with Backing
FS P-F-430	(Rev C; Am 1) Finish, Floor, Water-Emulsion (For Use on Light Colored Floors)
FS P-W-155	(Rev C; Int Am 1) Wax, Floor, Water-Emulsion
FS SS-W-40	(Rev A; Int Am 1; Notice 1) Wall Base: Rubber, and Vinyl Plastic

1.2 SUBMITTALS

Government approval is required for submittals with a "GA" designation; submittals having an "FIO" designation are for information only. The following shall be submitted in accordance with Section 01300 SUBMITTAL PROCEDURES:

SD-01 Data

Resilient Flooring and Accessories; FIO.

Manufacturer's descriptive data and installation instructions. Cleaning and maintenance instructions shall be included.

SD-09 Reports

Resilient Flooring and Accessories; FIO.

Copies of test reports showing that representative product samples of the flooring proposed for use have been tested by an independent testing laboratory within the past year and conform to the requirements specified.

SD-14 Samples

Resilient Flooring and Accessories; FIO.

Three samples of each indicated color and type of flooring and base. Sample size shall be minimum 3 inches by 5 inches.

1.3 DELIVERY AND STORAGE

Materials shall be delivered to the building site in original unopened containers, shall be stored in a clean dry area with temperature maintained above 70 degrees F for 2 days prior to installation, and shall be stacked according to manufacturer's recommendations.

1.4 ENVIRONMENTAL REQUIREMENTS

Areas to receive resilient flooring shall be maintained at a temperature above 70 degrees F for 2 days before application, during application and 2 days after application. A minimum temperature of 55 degrees F shall be maintained thereafter.

1.5 SCHEDULING

Resilient flooring application shall be scheduled after the completion of other work which would damage the finished surface of the flooring.

1.6 EXTRA MATERIALS

Extra flooring material of each color and pattern shall be furnished at the rate of 5 tiles for each 1000 tiles and 5 square feet for each 1000 square feet of sheet flooring installed. Extra materials shall be from the same lot as those installed. Extra base material composed of 20 linear feet of each color shall be furnished.

PART 2 PRODUCTS

2.1 VINYL-COMPOSITION TILE

Vinyl-composition tile shall conform to ASTM F 1066, Class 2,(through pattern tile), Composition 1, asbestos-free, and shall be 12 inches square and 1/8 inch thick. Tile shall have the color and pattern uniformly distributed throughout the thickness of the tile. Flooring in any one continuous area shall be from the same lot and shall have the same shade and pattern. Color and pattern shall be as indicated on the Drawings.

2.2 SHEET VINYL FLOORING

Sheet vinyl flooring shall be composed of a homogeneous, nonlayered solid vinyl composition. Color and pattern shall be dispensed uniformly throughout the thickness of the wearlayer. Sheet vinyl flooring shall be not less than 72 inches wide. Color and pattern shall be as indicated on the Drawings.

2.2.1 Sheet Vinyl Flooring (without backing)

Sheet vinyl flooring without backing shall meet the overall thickness (0.080 inches), composition, flexibility, indentation, and the solvent resistance requirements of FS L-F-475. The solid vinyl color and pattern shall extend through the total thickness of the material.

2.3 RESILIENT BASE

Base shall conform to FS SS-W-40, Type I (rubber). Style B, (coved)-installed with resilient flooring or carpet. Base shall be 4 inches high and a minimum 1/8 inch thick, continuous roll. Preformed outside corners shall be furnished. Color shall be as indicated on the Drawings.

2.4 EDGE STRIP

Edge strip shall be vinyl, 1 inch wide, and of thickness to match the flooring. Color shall match wall base color unless otherwise indicated.

2.5 ADHESIVE

Adhesive for flooring and wall base shall be as recommended by the flooring manufacturer.

2.6 POLISH

Polish shall conform to FS P-F-430 or FS P-W-155.

PART 3 EXECUTION

3.1 EXAMINATION/VERIFICATION OF CONDITIONS

The Contractor shall verify that site conditions are in agreement with the design package and shall report all conditions that will prevent a proper installation. The Contractor shall not take any corrective action without written permission from the Government.

3.2 SURFACE PREPARATION

Flooring shall be in a true, level plane, except where indicated as sloped. Before any work under this section is begun, all defects such as rough or scaling concrete, low spots, high spots, and uneven surfaces shall have been corrected, and all damaged portions of concrete slabs shall have been repaired as recommended by the flooring manufacturer. Concrete curing compounds, other than the type that does not adversely affect adhesion, shall be entirely removed from the slabs.

3.3 MOISTURE TEST

The suitability of the concrete subfloor for receiving the resilient flooring with regard to moisture content shall be determined by a moisture test as recommended by the flooring manufacturer.

3.4 INSTALLATION OF VINYL-COMPOSITION TILE

Tile flooring shall be installed with adhesive in accordance with the manufacturer's installation instructions. Tile lines and joints shall be kept square, symmetrical, tight, and even. Each floor shall be in a true, level plane, except where indicated as sloped. Edge width shall vary as necessary to maintain full-size tiles in the field, but no edge tile shall be less than one-half the field tile size, except where irregular shaped rooms make it impossible. Flooring shall be cut to, and fitted around, all permanent fixtures, built-in furniture and cabinets, pipes, and outlets. Edge tile shall be cut, fitted, and scribed to walls and partitions after field flooring has been applied.

3.5 INSTALLATION OF SHEET VINYL FLOORING

Sheet vinyl flooring shall be installed with adhesive in accordance with the manufacturer's installation instructions. Flooring shall be fitted to the room by hand cutting, straight scribing, or pattern scribing as necessary to suit job conditions. Flooring shall be cut to, and fitted around, all permanent fixtures, built-in furniture and cabinets, pipes, and outlets. Seams shall be cut by overlapping or underscribing as recommended by the manufacturer. Seams and edges of sheet vinyl flooring in room areas shall be bonded or welded as recommended by the manufacturer. Flooring shall be installed with an integral coved base.

3.6 INSTALLATION OF EDGE STRIPS

Edge strips shall be secured with adhesive as recommended by the manufacturer. Edge strips shall be provided at locations where flooring termination is higher than the adjacent finished flooring, except at doorways where thresholds are provided.

3.7 INSTALLATION OF RESILIENT BASE

Wall base shall be installed with adhesive in accordance with the manufacturer's instructions. Base joints shall be tight and base shall be even with adjacent resilient flooring. Minimum length of any base shall be not less than 4 feet, unless hall is less than 7 feet. A splice at midpoint is acceptable in this case.

3.8 INSTALLATION OF INTEGRAL COVED BASE

Integral coved base shall be formed by extending the flooring material 4 inches onto the wall surface. Cove shall be supported by a plastic, rubber or wood coved filler having a minimum radius of 3/4 inch. Coved base shall be installed with adhesive in accordance with the manufacturer's instructions. A metal or vinyl cap strip shall be provided at the top of the base.

3.9 CLEANING

Immediately upon completion of installation of tile in a room or an area, flooring and adjacent surfaces shall be cleaned to remove all surplus adhesive. No sooner than 5 days after installation, flooring shall be washed with a nonalkaline cleaning solution, rinsed thoroughly with clear cold water, and, except for raised pattern flooring and static control vinyl tile, given two coats of polish. After each polish coat, floors shall be buffed to an even luster with an electric polishing machine.

3.10 PROTECTION

From the time of laying until acceptance, flooring shall be protected from damage. Flooring which becomes damaged, loose, broken, or curled shall be removed and replaced.

-- End of Section --

SECTION TABLE OF CONTENTS

DIVISION 09 - FINISHES

SECTION 09680

CARPET

07/92

PART 1 GENERAL

1.1 REFERENCES
1.2 SUBMITTALS
1.3 DELIVERY AND STORAGE
1.4 ENVIRONMENTAL REQUIREMENTS
1.5 WARRANTY
1.6 EXTRA MATERIAL

PART 2 PRODUCTS

2.1 CARPET
2.1.1 Broadloom Physical Characteristics
2.1.2 Carpet Tile Physical Characteristics
2.1.3 Performance Requirements
2.2 ADHESIVES AND CONCRETE PRIMER
2.3 MOLDING
2.4 TAPE

PART 3 EXECUTION

3.1 SURFACE PREPARATION
3.2 MOISTURE TEST
3.3 INSTALLATION
3.3.1 Broadloom of Installation
3.3.2 Modular Tile Installation
3.4 CLEANING AND PROTECTION
3.4.1 Cleaning
3.4.2 Protection
3.5 REMNANTS

-- End of Section Table of Contents --

SECTION 09680

CARPET
07/92

PART 1 GENERAL

1.1 REFERENCES

The publications listed below form a part of this specification to the extent referenced. The publications are referred to in the text by basic designation only.

AMERICAN ASSOCIATION OF TEXTILE CHEMISTS AND COLORISTS (AATCC)

AATCC 16	(1993) Test Method: Colorfastness to Light
AATCC 134	(1991) Test Method: Electrostatic Propensity of Carpets
AATCC 165	(1993) Test Method: Colorfastness to Crocking: Carpets - AATCC Crockmeter Method

AMERICAN SOCIETY FOR TESTING AND MATERIALS (ASTM)

ASTM D 418	(1993) Pile Yarn Floor Covering Construction
ASTM D 1335	(1967; R 1972) Tuft Bind of Pile Floor Coverings
ASTM D 3936	(1980) Delamination Strength of Secondary Backing of Pile Floor Coverings
ASTM E 648	(1994a) Critical Radiant Flux of Floor-Covering Systems Using a Radiant Heat Energy Source

CARPET AND RUG INSTITUTE (CRI)

CRI 104	(1994) Commercial Carpet Installation Standard

CODE OF FEDERAL REGULATIONS (CFR)

16 CFR 1630	Standard for the Surface Flammability of Carpet and Rugs

GERMANY INSTITUTE FOR STANDARDIZATION (DEUTSCHES INSTITUTE FUR NORMUNG) (DIN)

DIN 54318	(1986) Machine-Made Textile Floor Coverings; Determination of Dimensional Changes Due to the Effects of Varied Water and Heat Conditions; Identical with Iso

2551 Edition 1981

1.2 SUBMITTALS

Government approval is required for submittals with a "GA" designation; submittals having an "FIO" designation are for information only. The following shall be submitted in accordance with Section 01300 SUBMITTAL PROCEDURES:

SD-01 Data

Carpet and Accessories; FIO.

For each type of carpet material and installation accessory required, catalog data and printed documentation stating physical characteristics, durability, resistance to fading and flame resistance characteristics.

SD-04 Drawings

Installation; FIO.

Layout drawings indicating areas receiving carpet, direction of pile, location of seams, and locations of edge molding.

SD-06 Instructions

Carpet and Accessories; FIO.

Three copies of the manufacturer's printed installation instructions for the carpet, including procedures for installation, preparation of substrate, seaming techniques, and recommended adhesives and tapes.

SD-09 Reports

Moisture Tests; FIO.

Test reports of moisture content of concrete slab stating date of test, person conducting the test, and the area tested.

SD-13 Certificates

Carpet and Accessories; FIO.

Certificates of compliance from a laboratory accredited by the National Laboratory Accreditation Program of the National Institute of Standards and Technology attesting that each type of carpet and cushion material conforms to the standards specified.

SD-14 Samples

Carpet and Accessories; GA.

a. Carpet: Two "Production Quality" samples 27 by 18 inches of each carpet proposed for use, showing quality, pattern, and color specified.

c. Vinyl or Aluminum Moldings: Two pieces of each type at least 12 inches long.

d. Special Treatment Materials: Two samples showing system and installation method proposed.

SD-19 Operation and Maintenance Manuals

Carpet and Accessories; FIO.

Three copies of carpet manufacturer's maintenance instructions describing recommended type of cleaning equipment and material, spotting and cleaning methods and cleaning cycles.

1.3 DELIVERY AND STORAGE

Materials shall be delivered to the site in the manufacturer's original wrappings and packages clearly labeled with the manufacturer's name, brand name, size, dye lot number, and related information. Materials shall be stored in a clean, dry, well ventilated area, protected from damage and soiling, and maintained at a temperature above 60 degrees F for 2 days prior to installation.

1.4 ENVIRONMENTAL REQUIREMENTS

Areas in which carpeting is to be installed shall be maintained at a temperature above 60 degrees F for 2 days before installation, during installation, and for 2 days after installation. A minimum temperature of 55 degrees F shall be maintained thereafter for the duration of the contract. Traffic or movement of furniture or equipment in carpeted area shall not be permitted for 24 hours after installation. Other work which would damage the carpet shall be completed prior to installation of carpet.

1.5 WARRANTY

Manufacturer's standard performance guarantees or warranties that extend beyond a one-year period shall be provided.

1.6 EXTRA MATERIAL

Extra material from same dye lot consisting of full width continuous broadloom and uncut carpet tiles shall be provided for maintenance. A minimum of percent of total square yards of each carpet type, pattern, and color shall be provided.

PART 2 PRODUCTS

2.1 CARPET

Carpet shall be first quality; free of visual blemishes, streaks, poorly dyed areas, and other physical and manufacturing defects. Carpet materials and treatments shall be reasonably nonallergenic and free of other recognized health hazards.

2.1.1 Broadloom Physical Characteristics

Carpet shall comply with the following:

a. Carpet Fabrication: Tufted.

b. Category: Broadloom with 0.15 percent growth/shrink rate in accordance with DIN 54318.

c. Pile Type: Level-loop.

d. Pile Fiber: Branded commercial nylon continuous filament.

e. Pile or Wire Height: .138 inch.

f. Gauge: 1/12 inch.

g. Stitches and Tufts: 9 per square inch.

h. Surface Pile Yarn Weight, (or Face Weight): 24 ounces per square yard. This does not include weight of backings. Weight of actual surface yarn exposed to wear above carpet backing shall be determined in accordance with ASTM D 418.

i. Pile Density: 6261 as determined using the formula below.

Density = (W)(36)/T

W is pile yarn weight in ounces per square yard, and T is pile thickness in inches. Pile thickness shall be determined in accordance with ASTM D 418.

j. Dye Method:

Solution dyed - synthetic yarn which is spun from a colored solution with the filament impregnated with the pigment.

k. Backing Materials: Primary backing materials shall be thermoplastic composite polymer.

l. Width: 12 feet minimum usable carpet with exception of corridors .

m. Pattern, texture, and color: As indicated on the Drawings.

2.1.2 Carpet Tile Physical Characteristics

Carpet shall comply with the following:

a. Carpet Fabrication: Woven.

b. Category: Carpet Tile with 0.15 percent growth/shrink rate in accordance with DIN 54318.

c. Pile Type: Cut Pile.

d. Pile Fiber: Branded commercial nylon continuous filament.

e. Pile or Wire Height: .275 inch.

g. Stitches and Tufts: 7.2 per square inch.

h. Surface Pile Yarn Weight, (or Face Weight): 28 ounces per square yard. This does not include weight of backings. Weight of actual surface yarn exposed to wear above carpet backing shall be determined in accordance with ASTM D 418.

i. Pile Density: 3665 as determined using the formula below.

Density = (W)(36)/T

W is pile yarn weight in ounces per square yard, and T is pile thickness in inches. Pile thickness shall be determined in accordance with ASTM D 418.

j. Dye Method:

Solution dyed - synthetic yarn which is spun from a colored solution with the filament impregnated with the pigment.

l. Width: 12 feet minimum usable carpet with exception of corridors .

m. Pattern, texture, and color: As indicated on the Drawings.

2.1.3 Performance Requirements

a. Static Control: Static control shall be provided to permanently control static buildup to less than 2000 volts when tested at 20 percent relative humidity and 70 degrees F in accordance with AATCC 134.

b. Flammability and Critical Radiant Flux Requirements: Carpet shall comply with 16 CFR 1630. Carpet in corridors and exits shall have a minimum average critical radiant flux of 0.50 watts per square centimeter when tested in accordance with ASTM E 648.

c. Tuft Bind: Tuft bind shall be a minimum 9 pound average force for loop pile for broadloom carpet and 4 pound average force for cut pile for carpet tile when tested in accordance with ASTM D 1335.

d. Additional Performance Characteristics:

(1) Antimicrobial: Nontoxic antimicrobial treatment guaranteed by the carpet manufacturer to last the life of the carpet.

e. Colorfastness to Crocking: Dry and wet crocking shall comply with AATCC 165 and shall have a minimum rating of step 4 on the AATCC Color Transference Chart for all colors.

f. Colorfastness to Light: Colorfastness to light shall comply with AATCC 16 and shall have a minimum 4 grey scale rating after 40 hours.

g. Delamination Strength: Delamination strength for tufted carpet with a secondary back shall be minimum of 2.5 lb./inch in accordance with ASTM D 3936.

2.2 ADHESIVES AND CONCRETE PRIMER

Adhesives and concrete primers for installation of carpet shall be waterproof, nonflammable, meet local air-quality standards, and shall be as recommended by the carpet manufacturer. Seam adhesive shall be waterproof, nonflammable, and nonstaining as recommended by the carpet manufacturer. Release adhesive for modular tile carpet shall be as recommended by the carpet manufacturer.

2.3 MOLDING

Molding shall be vinyl. Vinyl molding shall be heavy-duty and designed for the type of carpet being installed. Floor flange shall be a minimum 2 inches wide. Color shall be as indicated on the Drawings.

2.4 TAPE

Tape for seams shall be as recommended by the carpet manufacturer for the type of seam used in installation.

PART 3 EXECUTION

3.1 SURFACE PREPARATION

Carpet shall not be installed on surfaces that are unsuitable and will prevent a proper installation. Holes, cracks, depressions, or rough areas shall be repaired using material recommended by the carpet or adhesive manufacturer. Floor shall be free of any foreign materials and swept broom clean. Before beginning work, subfloor shall be tested with glue and carpet to determine "open time" and bond.

3.2 MOISTURE TEST

Concrete slab shall be tested for moisture content. The moisture content shall not exceed a hygrometer reading of 65 percent.

3.3 INSTALLATION

Installation shall be in accordance with the manufacturer's instructions and CRI 104. Edges of carpet meeting hard surface flooring shall be protected with molding. Installation shall be in accordance with the molding manufacturer's instructions.

3.3.1 Broadloom of Installation

Broadloom carpet shall be installed direct glue down and shall be smooth, uniform, and secure, with a minimum of seams. Seams shall be uniform, unnoticeable, and treated with a seam adhesive. Side seams shall be run toward the light where practical and where such layout does not increase the number of seams. Breadths shall be installed parallel, with carpet pile in the same direction. Patterns shall be accurately matched. Cutouts, as at door jambs, columns and ducts shall be neatly cut and fitted securely. Seams at doorways shall be located parallel to and centered directly under doors. Seams shall not be made perpendicular to doors or at pivot points. Seams at changes in directions of corridors shall follow the wall line parallel to the carpet direction. Corridors with widths less than 6 feet shall have the carpet laid lengthwise down the corridors.

3.3.2 Modular Tile Installation

Modular tiles shall be installed with a release adhesive and shall be snugly jointed together.

3.4 CLEANING AND PROTECTION

3.4.1 Cleaning

After installation of the carpet, debris, scraps, and other foreign matter shall be removed. Soiled spots and adhesive shall be removed from the face of the carpet with appropriate spot remover. Protruding face yarn shall be cut off and removed. Carpet shall be vacuumed clean.

3.4.2 Protection

The installed carpet shall be protected from soiling and damage with heavy, reinforced, nonstaining kraft paper, plywood, or hardboard sheets. Edges of kraft paper protection shall be lapped and secured to provide a continuous cover. Traffic shall be restricted for at least 45 hours. Protective covering shall be removed when directed by the Contracting Officer.

3.5 REMNANTS

Remnants remaining from the installation, consisting of scrap pieces more than 2 feet in dimension with more than 6 square feet total, shall be provided. Non-retained scraps shall be removed from site.

-- End of Section --

SECTION TABLE OF CONTENTS

DIVISION 09 - FINISHES

SECTION 09836

MULTI-COLOR COATING

07/94

PART 1 GENERAL

1.1 REFERENCES
1.2 SUBMITTALS
1.3 QUALITY ASSURANCE
1.4 REGULATORY REQUIREMENTS
1.4.1 Lead Content
1.4.2 Chromate Content
1.4.3 Asbestos Content
1.4.4 Mercury Content
1.5 DELIVERY AND STORAGE
1.6 SAFETY METHODS
1.6.1 Safety Methods Used During Coating Application
1.6.2 Toxic Materials
1.7 ENVIRONMENTAL CONDITIONS
1.7.1 Interior Coatings
1.8 COLOR SELECTION

PART 2 PRODUCTS

2.1 MULTI-COLORED COATING

PART 3 EXECUTION

3.1 INSPECTION AND ACCEPTANCE OF SURFACES
3.2 PREPARATION OF SURFACES
3.3 APPLICATION
3.4 PROTECTION AND CLEAN UP

-- End of Section Table of Contents --

SECTION 09836

MULTI-COLOR COATING
07/94

PART 1 GENERAL

1.1 REFERENCES

The publications listed below form a part of this specification to the extent referenced. The publications are referred to in the text by the basic designation only.

AMERICAN SOCIETY FOR TESTING AND MATERIALS (ASTM)

ASTM E 84	Surface BurningCharacteristics of Building Materials

1.2 SUBMITTALS

Government approval is required for submittals with a "GA" designation; submittals having an "FIO" designation are for information only. The following shall be submitted in accordance with Section 01300 SUBMITTAL PROCEDURES:

SD-06, Instructions

Application instructions; FIO. Manufacturer's material safety data sheets ; FIO.

Submit Manufacturer's material safety data sheets for coatings, solvents, and other potentially hazardous materials, as defined in FED-STD-313.

SD-08, Statements

Applicator's qualifications; FIO.

Letter of certification from the manufacturer stating that the applicator is an approved applicator for the multi-color coating material furnished. Letter of certification stating the technicians to be utilized for the application of the multi-color coating material have been trained by the coating manufacturer. Certification shall include statement that specialized equipment as required by the coating manufacturer will be used in the application of the multi-color coating.

Evidence of acceptable variation; FIO.

If a product proposed for use does not conform to requirements of the referenced specification, submit for approval to the Contracting Officer, evidence that the proposed product is either equal to or better than the product specified. The submittal shall include the following:

a. Identification of the proposed substitute;

b. Reason why the substitution is necessary;

c. A comparative analysis of the specified product and the proposed

substitute, including tabulations of the composition of pigment and vehicle;

d. The differences between the specified product and the proposed substitute; and

e. Other information necessary for an accurate comparison of the proposed substitute and the specified product.

SD-13, Certificates

Coating; FIO.

For each type of coating, or other product furnished:

a. Submit a certificate from the manufacturer stating that the product conforms to requirements of the referenced specification.

b. If the referenced specification has a Qualified Products List (QPL), certify that the product has been tested and approved for inclusion in the QPL.

SD-14, Samples

Multi-color coating; FIO.

Submit for each color and pattern of each item. Material samples, six inches square, showing the number of coats of coating material on each substrate to which the material is to be applied. Apply coating to the samples in a setback procedure, leaving exposed a portion of the substrate and subsequent portions of each coat.

1.3 QUALITY ASSURANCE

Use only qualified trained applicators for mixing and application of coating. Coverage and hide shall be complete. When color, stain, dirt, or undercoats show through final coat of multi-color coating, the surface shall be covered by additional coats until the coating film is of uniform finish, color appearance, and coverage.

1.4 REGULATORY REQUIREMENTS

1.4.1 Lead Content

Do not use coatings having a lead content over 0.06 percent by weight of nonvolatile content.

1.4.2 Chromate Content

Do not use coatings containing zinc-chromate or strontium-chromate.

1.4.3 Asbestos Content

Materials shall not contain asbestos.

1.4.4 Mercury Content

Materials shall not contain mercury or mercury compounds.

1.5 DELIVERY AND STORAGE

Deliver materials in sealed, labeled containers bearing the manufacturer's name, brand designation, specification number, batch number, color, and date of manufacture. Restrict storage and mixing of materials to locations designated by the Contracting Officer.

1.6 SAFETY METHODS

Apply coating materials using safety methods and equipment in accordance with the following:

1.6.1 Safety Methods Used During Coating Application

Comply with the requirements of SSPC PA 3.

1.6.2 Toxic Materials

To protect personnel from overexposure to toxic materials, conform to the most stringent guidance of:

a. The chemical manufacturer when using mineral spirits, or other chemicals. Use impermeable gloves, chemical goggles or faceshield, and other recommended protective clothing and equipment to avoid exposure of skin, eyes, and respiratory system. Conduct work in a manner to minimize exposure of building occupants and the general public.

b. 29 CFR 1910.1000.

c. Threshold Limit Values (R) of the American Conference of Governmental Industrial Hygienists.

d. Manufacturer's Material Safety Data Sheets (MSDS).

1.7 ENVIRONMENTAL CONDITIONS

1.7.1 Interior Coatings

Apply coatings when surfaces to be painted are dry and the following surface temperatures can be maintained:

a. Between 50 and 95 degrees F during the application of other coatings.

1.8 COLOR SELECTION

Colors of multi-color coatings shall be as indicated or specified. Manufacturers' names and color identification are used for the purpose of color identification only. Named products are acceptable for use only if they conform to specified requirements. Products of other manufacturers are acceptable if the colors approximate colors indicated and the product conforms to specified requirements.

PART 2 PRODUCTS

2.1 MULTI-COLORED COATING

Low odor, Class A Fire rated and listed per ASTM E 84, bacteriostatic per FS UU-P-510B, plastic terpolymer coating, incorporating a high resistance to fungas, mildew, alkalinity, soil and abrasion. All materials shall be used only as specified by manufacturer's direction label on the container

or other technical publications. All multi-color coating materials and primers shall be pure and of the highest grade quality. They shall bear identifying labels on the containers. Thinners, if necessary, shall only be those as recommended by the manufacturer for the material being thinned. All coating materials and equipment shall be comptible in use; finish coats shall be comptaible with foundation coatings, overcoatings and the surfaces to be coated; all tools and equipment shall be comptaible with the coating to be applied. Provide ready mixed multi-color coating materials. Job tinting and mixing is not acceptable. Multi-colro coatings shall be Zolatone as manuafactured by Zolatone or Polomyx as manufactured by Polomyx or equal.

PART 3 EXECUTION

3.1 INSPECTION AND ACCEPTANCE OF SURFACES

Follow manufacturer's instructions carefully so as to apply materials only to surfaces which are acceptable. Before starting any work, surfaces to receive multi-color coatings shall be examined carefully for defects which cannot be corrected by the procedures specified under Article, PREPARATION OF SURFACES and which might prevent satisfactory results. Work shall not proceed until defects are corrected. Application of coating materials shall constitute acceptance of the surface, and shall obligate Contractor for such repair as are necessary to repair any unsatisfactory finish resulting.

3.2 PREPARATION OF SURFACES

Prior to surface preparation and application operations, completely mask, remove, or otherwise adequately protect hardware, accessories, machined surfaces, plates, lighting fixtures, and similar items in contact with coated surfaces but not scheduled to receive multi-color coating. Before applying multi-color coating, thoroughly clean all surfaces involved. Schedule cleaning so that dust and other contaminants from the cleaning process do not fall on wet, newly coated surfaces. All surfaces shall be clean, dry and adequately protected from dampness. Surfaces shall be smooth, even, and true to place, and free of any foreign material which will adversely affect adhesion or appearance of applied coating. Mildew shall be removed and neutralized. Before coating is applied, surfaces shall be tested with moisture-testing device. No coating shall be applied when moisture content exceeds 12 percent except as may be required by the manufacturer of the coating materials used. Test sufficient area in each space, and as often as necessary to determine the proper moisture content for application. Prime surfaces to receive multi-color coating with primer recommended by coating manufacturer. Use stark white primer. No top coating will be allowed if primer is any other color than stark white. Sand and reprime all abrasions and damaged spots in the surface of the prime coat before proceeding with subsequent finish coat.

3.3 APPLICATION

Follow manufacturer's printed recommendations and instructions in application of multi-color coating materials. Apply multi-color coating material by using high velocity, pressure differential spray technique, with variable control to assure uniform distribution and 100 percent full coat (continuous) coverage. Equipment shall be kept clean and in proper condition to provide best quality work. Evenly spread and smoothly apply materials free of runs, sags, holidays, lap marks, air bubbles, and pin holes to assure a smooth finish. Suction or hot spots shall be touched up.

Finish material shall be applied in one coat over properly primed surfaces according to manufacturer's instructions and as required to meet specified requirements for sheen, texture and color. Should any coat of coating be adjudged unsatisfactory, it shall be sandpapered or removed and additional coats applied as necessary until satisfactory finish is achieved. Top coating shall consist of applying a background and pattern step.

3.4 PROTECTION AND CLEAN UP

Protect the adjacent work and materials by suitable covering or other method, during application of the textured coating. Upon completion of the work, remove all coating material spots from the floors, glass and other surfaces. Remove from the premises all rubbish and accumulated materials and leave the work in clean, orderly and acceptable condition. Contractor shall repair and recoat damaged surfaces. Repair and recoat damaged surfaces at no additional expense to the Government.

-- End of Section --

SECTION TABLE OF CONTENTS

DIVISION 09 - FINISHES

SECTION 09900

PAINTING, GENERAL

07/92

PART 1 GENERAL

1.1 REFERENCES
1.2 SUBMITTALS
1.3 PACKAGING, LABELING, AND STORING
1.4 APPROVAL OF MATERIALS
1.5 ENVIRONMENTAL CONDITIONS
1.6 SAFETY AND HEALTH
1.6.1 Worker Exposures
1.6.2 Toxic Compounds
1.6.3 Training
1.6.4 Coordination

PART 2 PRODUCTS

2.1 PAINT
2.1.1 Colors and Tints
2.1.2 Mildewcide and Insecticide
2.1.3 Lead
2.1.4 Chromium
2.1.5 Volatile Organic Compound (VOC) Content

PART 3 EXECUTION

3.1 PROTECTION OF AREAS NOT TO BE PAINTED
3.2 SURFACE PREPARATION
3.2.1 Masonry Surfaces
3.2.2 Ferrous Surfaces
3.2.3 Nonferrous Metallic Surfaces
3.2.4 Gypsum Board Surfaces
3.2.5 Mastic-Type Surfaces
3.2.6 Wood Surfaces
3.2.6.1 Stained Wood Surfaces
3.2.7 Previously Painted Surfaces
3.3 MIXING AND THINNING
3.4 APPLICATION
3.4.1 Ventilation
3.4.2 Respirators
3.4.3 First Coat
3.4.4 Timing
3.4.5 Ferrous-Metal Primer
3.5 PIPE COLOR CODE MARKING
3.6 MISCELLANEOUS PAINTING
3.6.1 Lettering
3.7 SURFACES TO BE PAINTED
3.8 SURFACES NOT TO BE PAINTED

3.9 CLEANING
3.10 PAINTING SCHEDULES

-- End of Section Table of Contents --

SECTION 09900

PAINTING, GENERAL
07/92

PART 1 GENERAL

1.1 REFERENCES

The publications listed below form a part of this specification to the extent referenced. The publications are referred to in the text by basic designation only.

AMERICAN CONFERENCE OF GOVERNMENTAL INDUSTRIAL HYGIENISTS (ACGIH)

ACGIH-02	(1991) 1991-1992 Threshold Limit Values for Chemical Substances and Physical Agents and Biological Exposure Indices

AMERICAN SOCIETY FOR TESTING AND MATERIALS (ASTM)

ASTM D 3273	(1986; R 1991) Resistance to Growth of Mold on the Surface of Interior Coating in an Environmental Chamber
ASTM D 3274	(1982; R 1988) Evaluating Degree of Surface Disfigurement of Paint Films by Microbial (Fungal or Algal) Growth or Soil and Dirt Accumulation
ASTM D 4214	(1989) Evaluating the Degree of Chalking of Exterior Paint Films

FEDERAL SPECIFICATIONS (FS)

FS TT-C-535	(Rev B; Am 2) Coating, Epoxy, Two Component, for Interior Use on Metal, Wood, Wallboard, Painted Surfaces Concrete and Masonry
FS TT-E-489	(Rev H) Enamel, Alkyd, Gloss, Low VOC Content
FS TT-E-505	(Rev B) Enamel (Odorless, Alkyd, Interior, High Gloss)
FS TT-E-506	(Rev K; Am 1) Enamel, Alkyd, Gloss, Tints and White (for Interior Use)
FS TT-E-545	(Rev C) Primer (Enamel-Undercoat, Alkyd, Odorless, Interior, Flat, Tints and White)
FS TT-P-19	(Rev D; Am 1) Paint, Latex (Acrylic Emulsion, Exterior Wood and Masonry)
FS TT-P-29	(Rev K) Paint, Latex
FS TT-P-30	(Rev E; Am 1) Paint, Alkyd, Odorless, Interior, Flat, White and Tints

FS TT-P-38	(Rev E) Paint, Aluminum (Ready-Mixed)
FS TT-P-102	(Rev F) Paint, Oil, (Alkyd Modified, Exterior, Low VOC)
FS TT-P-650	(Rev D) Primer Coating, Latex Base, Interior, White (for Gypsum Wallboard, or Plaster)
FS TT-P-002119	(Basic) Paint, Latex Base, High Traffic Area, Flat and Eggshell Finish (Low Lustre), (For Interior Use)
FS TT-S-711	(Rev C) Stain; Oil Type, Wood, Interior
FS TT-V-85	(Rev C; Int Am 2) Varnish, Oil, Low Sheen, Brush or Spray Application

STEEL STRUCTURES PAINTING COUNCIL (SSPC)

SSPC Paint 5	(1991) Zinc Dust, Zinc Oxide and Phenolic Varnish Paint
SSPC Paint 21	(1991) White or Colored Silicone Alkyd Paint
SSPC Paint 25	(1991) Red Iron Oxide, Zinc Oxide, Raw Linseed Oil and Alkyd Primer (without Lead and Chromate Pigments)
SSPC SP 1	(1982) Solvent Cleaning
SSPC SP 2	(1989) Hand Tool Cleaning
SSPC SP 3	(1989) Power Tool Cleaning
SSPC SP 7	(1991) Brush-Off Blast Cleaning

1.2 SUBMITTALS

Government approval is required for submittals with a "GA" designation; submittals having an "FIO" designation are for information only. The following shall be submitted in accordance with Section 01300 SUBMITTAL PROCEDURES:

SD-01 Data

Paint; FIO.

The names, quantity represented, and intended use for the proprietary brands of materials proposed to be substituted for the specified materials when the required quantity of a particular batch is 50 gallons or less.

SD-06 Instructions

Mixing and Thinning; FIO. Application; FIO.

Manufacturer's current printed product description, material safety data sheets (MSDS) and technical data sheets for each coating system. Detailed mixing, thinning and application instructions, minimum and maximum application temperature, and curing and drying times between coats for epoxy, moisture-curing polyurethane, and liquid glaze coatings. Detailed application instructions for textured coatings shall be provided.

SD-09 Reports

Paint; FIO.

A statement as to the quantity represented and the intended use, plus the following test report for batches in excess of 50 gallons:

a. A test report showing that the proposed batch to be used meets all specification requirements, or:

b. A test report showing that a previous batch of the same formulation as the batch to be used met all specification requirements, plus, on the proposed batch to be used, a report of test results for properties of weight per gallon, viscosity, fineness of grind, drying time, color, and gloss.

SD-13 Certificates

Lead; FIO. Mildewcide and Insecticide; FIO. Volatile Organic Compound (VOC) Content; FIO.

Certificate stating that paints for interior use contain no mercurial mildewcide or insecticide. Certificate stating that paints proposed for use contain not more than 0.06 percent lead. Certificate stating that paints proposed for use meet the VOC regulations of the local Air Pollution Control Districts having jurisdiction over the geographical area in which the project is located.

SD-14 Samples

Moisture-curing Polyurethane; FIO.

A complete moisture-curing polyurethane system applied to a panel of the same material as that on which the coating will be applied in the work and for each color specified. The sample panels will be used for quality control in applying the system.

Paint; FIO.

While the material is at the site or source of supply, and at a time agreeable to the Contractor and the Contracting Officer, a 1 quart sample of each color and batch, except for quantities of 50 gallons or less, shall be taken by random selection from the sealed containers by the Contractor in the presence of a representative of the Contracting Officer. The contents of the containers to be sampled shall be thoroughly mixed to ensure that the sample is representative. Samples shall be identified by designated name, specification number, manufacturer name and address, batch number, project contract number, intended use, and quantity involved.

1.3 PACKAGING, LABELING, AND STORING

Paints shall be in sealed containers that legibly show the designated name,

formula or specification number, batch number, color, quantity, date of manufacture, manufacturer's formulation number, manufacturer's directions including any warnings and special precautions, and name of manufacturer. Pigmented paints shall be furnished in containers not larger than 5 gallons. Paints and thinner shall be stored in accordance with the manufacturer's written directions and as a minimum stored off the ground, under cover, with sufficient ventilation to prevent the buildup of flammable vapors and at temperatures between 40 and 95 degrees F. Paints shall be stored on the project site or segregated at the source of supply sufficiently in advance of need to allow 30 days for testing.

1.4 APPROVAL OF MATERIALS

When samples are tested, approval of materials will be based on tests of the samples; otherwise, materials will be approved based on test reports furnished with them. If materials are approved based on test reports furnished, samples will be retained by the Government for testing should the materials appear defective during or after application. In addition to any other remedies under the contract the cost of retesting defective materials will be at the Contractor's expense.

1.5 ENVIRONMENTAL CONDITIONS

Unless otherwise recommended by the paint manufacturer, the ambient temperature shall be between 45 and 95 degrees F when applying coatings other than water-thinned, epoxy, and moisture-curing polyurethane coatings. Water-thinned coatings shall be applied only when ambient temperature is between 50 and 90 degrees F. Epoxy, and moisture-curing polyurethane coatings shall be applied only within the minimum and maximum temperatures recommended by the coating manufacturer. Moisture-curing polyurethane shall not be applied when the relative humidity is below 30 percent.

1.6 SAFETY AND HEALTH

Work shall comply with applicable Federal, State, and local laws and regulations, and with the ACCIDENT PREVENTION PLAN, including the Activity Hazard Analysis as specified in the CONTRACT CLAUSES. The Activity Hazard Analysis shall include analyses of the potential impact of painting operations on painting personnel and on others involved in and adjacent to the work zone.

1.6.1 Worker Exposures

Exposure of workers to chemical substances shall not exceed limits as established by ACGIH-02, or as required by a more stringent applicable regulation.

1.6.2 Toxic Compounds

Toxic compounds having ineffective physiological properties, such as odor or irritation levels, shall not be used unless approved by the Contracting Officer.

1.6.3 Training

Workers having access to an affected work area shall be informed of the contents of the applicable material data safety sheets (MSDS) and shall be informed of potential health and safety hazard and protective controls associated with materials used on the project. An affected work area is

one which may receive mists and odors from the painting operations. Workers involved in preparation, painting and clean-up shall be trained in the safe handling and application, and the exposure limit, for each material which the worker will use in the project. Personnel having a need to use respirators and masks shall be instructed in the use and maintenance of such equipment.

1.6.4 Coordination

Work shall be coordinated to minimize exposure of building occupants, other Contractor personnel, and visitors to mists and odors from preparation, painting and clean-up operations.

PART 2 PRODUCTS

2.1 PAINT

The term "paint" as used herein includes emulsions, enamels, paints, stains, varnishes, sealers, cement-emulsion filler, and other coatings, whether used as prime, intermediate, or finish coat. Paint shall conform to the respective specifications listed for use in the painting schedules at the end of this section, except when the required amount of a material of a particular batch is 50 gallons or less, an approved first-line proprietary paint material with similar intended usage and color to that specified may be used. Additional requirements are as follows:

2.1.1 Colors and Tints

Colors shall be as selected from manufacturer's standard colors, as indicated on the Drawings. Manufacturer's standard color is for identification of color only. Tinting of epoxy, and urethane, paints shall be done by the manufacturer. Stains shall conform in shade to manufacturer's standard color. The color of the undercoats shall vary slightly from the color of the next coat.

2.1.2 Mildewcide and Insecticide

Paint specified for all coats applied to fabrics and vapor barrier jackets over insulation and surfaces shall contain a mildewcide that will not adversely affect the color, texture, or durability of the coating. The mildewcide shall be incorporated into the paint by the manufacturer and shall attain a surface disfigurement rating of 8 or greater when tested in accordance with ASTM D 3273 and evaluated in accordance with ASTM D 3274. Mercurial mildewcide shall not be used in interior paint. Insecticides shall not be used in paint.

2.1.3 Lead

Paints containing lead in excess of 0.06 percent by weight of the total nonvolatile content (calculated as lead metal) shall not be used.

2.1.4 Chromium

Paints containing zinc chromate or strontium chromate pigments shall not be used.

2.1.5 Volatile Organic Compound (VOC) Content

Paints shall comply with applicable state and local laws enacted to insure

compliance with Federal Clean Air Standards and shall conform to the restrictions of the local air pollution control authority.

PART 3 EXECUTION

3.1 PROTECTION OF AREAS NOT TO BE PAINTED

Items not to be painted which are in contact with or adjacent to painted surfaces shall be removed or protected prior to surface preparation and painting operations. Items removed prior to painting shall be replaced when painting is completed. Following completion of painting, workmen skilled in the trades involved shall reinstall removed items. Surfaces contaminated by coating materials shall be restored to original condition.

3.2 SURFACE PREPARATION

Surfaces to be painted shall be clean and free of foreign matter before application of paint or surface treatments. Oil and grease shall be removed with clean cloths and cleaning solvents prior to mechanical cleaning. Cleaning solvents shall be of low toxicity with a flashpoint in excess of 100 degrees F. Cleaning shall be programmed so that dust and other contaminants will not fall on wet, newly painted surfaces. Exposed ferrous metals such as nail heads on or in contact with surfaces to be painted with water-thinned paints, shall be spot-primmed with a suitable corrosion-inhibitive primer capable of preventing flash rusting and compatible with the coating specified for the adjacent areas.

3.2.1 Masonry Surfaces

Masonry surfaces shall be allowed to dry at least 30 days before painting. Glaze, efflorescence, laitance, dirt, grease, oil, asphalt, surface deposits of free iron and other foreign matter shall be removed prior to painting. Surfaces to receive polyurethane, chlorinated rubber or epoxy coatings shall be acid-etched or mechanically abraded as specified by the coating manufacturer, rinsed with water, allowed to dry, and treated with the manufacturer's recommended conditioner prior to application of the first coat.

3.2.2 Ferrous Surfaces

Ferrous surfaces including those that have been shop-coated, shall be solvent-cleaned. Surfaces that contain loose rust, loose mill scale, and other foreign substances shall be cleaned mechanically with hand tools according to SSPC SP 2, power tools according to SSPC SP 3 or by sandblasting according to SSPC SP 7. Shop-coated ferrous surfaces shall be protected from corrosion by treating and touching up corroded areas immediately upon detection.

3.2.3 Nonferrous Metallic Surfaces

Galvanized, aluminum and aluminum-alloy, lead, copper, and other nonferrous metal surfaces shall be solvent-cleaned in accordance with SSPC SP 1.

3.2.4 Gypsum Board Surfaces

Gypsum board surfaces shall be dry and shall have all loose dirt and dust removed by brushing with a soft brush, rubbing with a cloth, or vacuum-cleaning prior to application of the first-coat material. A damp cloth or sponge may be used if paint will be water-based.

3.2.5 Mastic-Type Surfaces

Mastic-type surfaces shall be prepared by removing foreign material.

3.2.6 Wood Surfaces

Wood surfaces shall be cleaned of foreign matter. Wood surfaces adjacent to surfaces to receive water-thinned paints shall be primed and/or touched up before applying water-thinned paints. Small, dry seasoned knots shall be scraped, cleaned, and given a thin coat of commercial knot sealer, before application of the priming coat. Pitch on large, open, unseasoned knots and all other beads or streaks of pitch shall be scraped off, or, if it is still soft, removed with mineral spirits or turpentine, and the resinous area shall be thinly coated with knot sealer. Finishing nails shall be set, and all holes and surface imperfections shall be primed. After priming, holes and imperfections in finish surfaces shall be filled with putty or plastic wood filler, colored to match the finish coat if natural finish is required, allowed to dry, and sanded smooth. Putty or wood filler shall be compatible with subsequent coatings.

3.2.6.1 Stained Wood Surfaces

Interior wood surfaces to receive stain shall be sanded. Oak and other open-grain wood to receive stain shall be given a coat of wood filler not less than 8 hours before the application of stain; excess filler shall be removed and the surface sanded smooth. Moisture content of the wood shall not exceed 12 percent as measured by a moisture meter, unless otherwise authorized.

3.2.7 Previously Painted Surfaces

Previously painted surfaces specified to be repainted or damaged during construction shall be thoroughly cleaned of all grease, dirt, dust or other foreign matter. Blistering, cracking, flaking and peeling or other deteriorated coatings shall be removed. Slick surfaces shall be roughened. Damaged areas such as, but not limited to, nail holes, cracks, chips, and spalls shall be repaired with suitable material to match adjacent undamaged areas. Edges of chipped paint shall be feather edged and sanded smooth. Rusty metal surfaces shall be cleaned as per SSPC requirements. Solvent, mechanical, or chemical cleaning methods shall be used to provide surfaces suitable for painting. Chalk shall be removed so that when tested in accordance with ASTM D 4214, the chalk resistance rating is no less than 8. New, proposed coatings shall be compatible with existing coatings. If existing surfaces are glossy, the gloss shall be reduced.

3.3 MIXING AND THINNING

When thinning is approved as necessary to suit surface, temperature, weather conditions, or application methods, paints may be thinned in accordance with the manufacturer's directions. When thinning is allowed, paints shall be thinned immediately prior to application with not more than 1 pint of suitable thinner per gallon. The use of thinner shall not relieve the Contractor from obtaining complete hiding, full film thickness, or required gloss. Thinning shall not cause the paint to exceed local limits on volatile organic compounds. Paints of different manufacturers shall not be mixed.

3.4 APPLICATION

Painting practices shall comply with applicable state and local laws enacted to insure compliance with Federal Clean Air Standards. Unless otherwise specified or recommended by the paint manufacturer, paint may be applied by brush, roller, or spray. At the time of application, paint shall show no signs of deterioration. Uniform suspension of pigments shall be maintained during application. Each coat of paint shall be applied so dry film shall be of uniform thickness and free from runs, drops, ridges, waves, pinholes or other voids, laps, brush marks, and variations in color, texture, and finish. Hiding shall be complete. Rollers for applying paints and enamels shall be of a type designed for the coating to be applied and the surface to be coated. Special attention shall be given to insure that all edges, corners, crevices, welds, and rivets receive a film thickness equal to that of adjacent painted surfaces. Paints, except water-thinned types, shall be applied only to surfaces that are completely free of moisture as determined by sight or touch.

3.4.1 Ventilation

Affected areas shall be ventilated during paint application so that workers exposure to chemical substances shall not exceed limits as established by ACGIH-02, or as required by a more stringent applicable regulation. Interior work zones having a volume of 10,000 cubic feet or less shall be ventilated at a minimum of 2 air exchanges per hour. Ventilation in larger work zones shall be maintained by means of mechanical exhaust. Solvent vapors shall be exhausted outdoors, away from air intakes and workers. Return air inlets in the work zone shall be temporarily sealed before start of work until the coatings have dried.

3.4.2 Respirators

Operators and personnel in the vicinity of operating paint sprayers shall wear respirators.

3.4.3 First Coat

The first coat on gypsum wallboard and other surfaces shall include repeated touching up of suction spots or overall application of primer or sealer to produce uniform color and gloss. Excess sealer shall be wiped off after each application. The first coat on both faces of wood doors shall be applied at essentially the same time. Glazed doors and sashes shall be given the specified coating system within 3 weeks of the time they are glazed, but not before the glazing material has set; paint shall overlay glass about 70 mils all around. Each varnish coat shall be sanded lightly prior to application of subsequent coats.

3.4.4 Timing

Surfaces that have been cleaned, pretreated, and otherwise prepared for painting shall be given a coat of the specified first coat as soon as practical after such pretreatment has been completed, but prior to any deterioration of the prepared surface. Sufficient time shall elapse between successive coats to permit proper drying. This period shall be modified as necessary to suit weather conditions. Oil-based or oleoresinous solvent-type paints shall be considered dry for recoating when the paint feels firm, does not deform or feel sticky under moderate pressure of the thumb, and the application of another coat of paint does not cause the undercoat to lift or lose adhesion. Manufacturer's instructions for application, curing and drying time between coats of

two-component systems shall be followed.

3.4.5 Ferrous-Metal Primer

Primer for ferrous-metal shall be applied to ferrous surfaces to receive paint other than asphalt varnish prior to deterioration of the prepared surface. The semitransparent film applied to some pipes and tubing at the mill is not to be considered a shop coat, but shall be overcoated with the specified ferrous-metal primer prior to application of finish coats.

3.5 PIPE COLOR CODE MARKING

Pipes in exposed areas and in accessible pipe spaces shall be provided with color band and titles adjacent to all valves, except those provided at plumbing fixtures, at not more than 40 foot spacing on straight pipe runs, adjacent to change in direction, and on both sides where pipes pass through walls or floors. Color code marking shall be of the color listed in TABLE I and the size listed in TABLE II. The arrows shall be installed adjacent to each band to indicate the direction of flow in the pipe. The legends shall be printed in upper-case black letters as listed in TABLE I. Letter sizes shall be as listed in TABLE II. Marking shall be painted or applied using colored, pressure-sensitive adhesive markers of standard manufacture. Paint shall be as specified for insulated and uninsulated piping.

TABLE I. COLOR CODES FOR MARKING PIPE

Material	Band	Letters and Arrow*	Legend
Cold water (potable)	Green	White	POTABLE WATER
Fire protection water	Red	White	FIRE PR. WATER
Hot water (domestic)	Green	White	H.W.
Hot water recirculating (domestic)	Green	White	H.W.R.
High temp. water supply	Yellow	Black	H.T.W.S.
High temp. water return	Yellow	Black	H.T.W.R.
Boiler feed water	Yellow	Black	B.F.
Low temp. water supply (heating)	Yellow	Black	L.T.W.S.
Low temp. water return (heating)	Yellow	Black	L.T.W.R.
Condenser water supply	Green	White	COND. W.S.
Condenser water return	Green	White	COND. W.R.
Chilled water supply	Green	White	C.H.W.S.
Chilled water return	Green	White	C.H.W.R.
Treated water	Yellow	Black	TR. WATER
Chemical feed	Yellow	Black	CH. FEED
Compressed air	Yellow	Black	COMP. AIR
Natural gas	Blue	White	NAT. GAS
Freon	Blue	White	FREON
Fuel oil	Yellow	Black	FUEL OIL
Steam	Yellow	Black	STM.
Condensate	Yellow	Black	COND.

TABLE II. COLOR CODE MARKING SIZES

Outside Diameter of Pipe Covering (Inches)	Length of Color Band (inches)	Arrow Length x Width (Inches)	Size of Legend Letters and Numerals (Inches)
Less than 1-1/2	8	8 x 2-1/4	1/2
1-1/2 to 2-3/8	8	8 x 2-1/4	3/4
2-1/2 to 7-7/8	12	8 x 2-1/4	1-1/4
8 to 10	24	12 x 4-1/2	2-1/2
Over 10	32	12 x 4-1/2	3-1/2

3.6 MISCELLANEOUS PAINTING

3.6.1 Lettering

Lettering shall be provided as scheduled on the drawings, shall be block type, and shall be black enamel. Samples shall be approved before application.

3.7 SURFACES TO BE PAINTED

Surfaces listed in the painting schedules at the end of this section, other than those listed in paragraph SURFACES NOT TO BE PAINTED, shall be painted as scheduled.

3.8 SURFACES NOT TO BE PAINTED

Surfaces of hardware, fittings, and other factory finished items shall not be painted.

3.9 CLEANING

Cloths, cotton waste and other debris that might constitute a fire hazard shall be placed in closed metal containers and removed at the end of each day. Upon completion of the work, staging, scaffolding, and containers shall be removed from the site or destroyed in an approved manner. Paint and other deposits on adjacent surfaces shall be removed and the entire job left clean and acceptable.

3.10 PAINTING SCHEDULES

The following painting schedules identify the surfaces to be painted and prescribe the paint to be used and the number of coats of paint to be applied. Contractor options are indicated by ------or------ between optional systems or coats.

EXTERIOR PAINTING SCHEDULE

Surface	First Coat	Second Coat	Third Coat
Ferrous metal unless otherwise specified	SSPC Paint 25	FS TT-P-102,	FS TT-P-102
Galvanized.	SSPC Paint 5	FS TT-P-102	FS TT-P-102
Ferrous metal above ground piping system	SSPC Paint 25	FS TT-P-102, Type II	FS TT-P-102 Type II
Concrete, unless otherwise specified.	FS TT-P-19	FS TT-P-19	None
Plaster	FS TT-P-19	FS TT-P-19	None

INTERIOR PAINTING SCHEDULE

Surface	First Coat	Second Coat	Third Coat
Gypsum board, concrete masonry units and plywood panels in Elect. and Comm. Rooms not requiring a smooth finish, unless otherwise specified. Medium knapp roller texture (no texture material). NOTE: CMU - no filler.	FS TT-P-002119 Class: Eggshell	FS TT-P-002119 Class: Eggshell	
Gypsum board ceilings at locations where not specified elsewhere	FS TT-P-002119 Class: Flat	FS TT-P-002119 Class: Flat	
Plaster and gypsum board: in shower areas, kitchen (walls only) and toilet room ceilings unless otherwise specified.	FS TT-C-535 Type II	FS TT-C-535 Type II	None
Concrete masonry units, plaster, and gypsum board: for walls in heavy traffic areas and areas requiring high degree of sanitation in space as follows:	Seal gypsum board and plaster with FS TT-P-29 ----or---- FS TT-P-650		
ceilings and walls in rooms: Treatment Rooms (132 and 144) Utility Rooms (149 and 134) Whirlpool Rooms (009) Locker Rooms (006 and 007)		FS TT-C-535 Type II	FS TT-C-535 Type II
Ferrous metal	SSPC Paint 5	FS TT-E-489	FS TT-E-489

INTERIOR PAINTING SCHEDULE

Surface	First Coat	Second Coat	Third Coat
unless otherwise specified including handrails and miscellaneous metals.			
Ferrous metal factory-primed mechanical and	FS TT-E-489,	FS TT-E-489,	None
------or------			
electrical equipment. Also including doors and frames.	SSPC Paint 21, Type I	SSPC Paint 21, Type I	None
Galvanized: unless otherwise specified.	SSPC Paint 5	Two coats of paint to match adjacent areas	
Wood: stain and varnish finishes as follows: Wood trim and wood base.	FS TT-S-711 fill and sand	FS TT-V-85 In addition a fourth coat of FS TT-V-85	FS TT-V-85
Metal: exposed Convector enclosures electrical conduit runs, metallic tubing, uninsulated ducts and pipes, pipe hangers	Ferrous metal: SSPC Paint 25	FS TT-E-545	FS TT-E-506 ------or------- FS TT-E-505
louvers, grilles, and air outlets in areas having painted adjacent surfaces and all fire protection (paint safety red) piping in new building.	Galvanized surface: SSPC Paint 5	FS TT-P-30	FS TT-P-30

INTERIOR PAINTING SCHEDULE

Surface	First Coat	Second Coat	Third Coat
Oil-based caulking compound.	FS TT-P-38	Same as adjacent areas	

-- End of Section --

SECTION TABLE OF CONTENTS

DIVISION 09 - FINISHES

SECTION 09950

WALL COVERINGS

01/93

PART 1 GENERAL

1.1 REFERENCES
1.2 SUBMITTALS
1.3 DELIVERY AND STORAGE
1.4 ENVIRONMENTAL REQUIREMENTS
1.5 EXTRA MATERIALS

PART 2 PRODUCTS

2.1 WALL COVERINGS
2.1.1 Vinyl Wall Covering
2.2 PRIMER AND ADHESIVE

PART 3 EXECUTION

3.1 SURFACE PREPARATION
3.2 INSTALLATION
3.2.1 Vinyl Wall Covering
3.3 CLEAN-UP

-- End of Section Table of Contents --

SECTION 09950

WALL COVERINGS
01/93

PART 1 GENERAL

1.1 REFERENCES

The publications listed below form a part of this specification to the extent referenced. The publications are referred to in the text by basic designation only.

FEDERAL SPECIFICATIONS (FS)

FS CCC-W-408 (Rev D) Wall Covering, Vinyl-Coated

1.2 SUBMITTALS

Government approval is required for submittals with a "GA" designation; submittals having an "FIO" designation are for information only. The following shall be submitted in accordance with Section 01300 SUBMITTAL PROCEDURES:

SD-01 Data

Wall Covering and Accessories; FIO.

Manufacturer's descriptive data.

SD-06 Instructions

Installation; FIO.

Installation instructions for wall covering and accessories.

Maintenance; FIO.

Cleaning and maintenance instructions for wall covering and accessories.

SD-14 Samples

Wall Covering and Accessories; FIO.

Three samples of each indicated type, pattern, and color of wall covering required. Samples of wall covering shall be minimum 5 inches by 7 inches and of sufficient size to show pattern repeat. Three samples of each indicated type edge guard and wainscot cap required.

1.3 DELIVERY AND STORAGE

Materials shall be delivered to the building site in original unopened containers. Materials shall be stored in accordance with the manufacturer's instructions in a clean dry area with temperature maintained above 60 degrees F.

1.4 ENVIRONMENTAL REQUIREMENTS

Areas to receive wall covering shall be maintained at a temperature above 60 degrees F for 3 days before, during, and 3 days after application.

1.5 EXTRA MATERIALS

One lineal foot of full-width wall covering for each 100 lineal feet of wall covering installed shall be furnished. The wall covering shall be from the same lot as that installed.

PART 2 PRODUCTS

2.1 WALL COVERINGS

Wall coverings shall be manufacturer's standard material designed specifically for the specified use.

2.1.1 Vinyl Wall Covering

Vinyl wall covering shall be a vinyl coated woven or nonwoven fabric with mildew and germicidal additives and shall conform to FS CCC-W-408, Type II, (13.1 to 24 ounces) total weight per square yard and width of 54 inches. Pattern and color of vinyl wall covering shall be as indicated on the Drawings.

2.2 PRIMER AND ADHESIVE

Primer and adhesive shall be mildew resistant and of a type recommended by the wall covering manufacturer. Adhesive to install cap shall be of a type recommended by the manufacturer of the wainscot cap.

PART 3 EXECUTION

3.1 SURFACE PREPARATION

Wall covering shall not be applied to surfaces that are rough, that contain stains that will bleed through the wall covering, or that are otherwise unsuitable for proper installation. Cracks and holes shall be filled and rough spots shall be sanded smooth. Surfaces to receive wall covering shall be thoroughly dry. Plaster surfaces shall age at least 30 days prior to installation of vinyl wall coverings. Moisture content of plaster, concrete, and masonry shall be tested with an electric moisture meter and reading shall be not more than 5 percent. Surface of walls shall be primed as required by manufacturer's instructions to permit ultimate removal of wall covering from the wall surface. Primer shall be allowed to completely dry before adhesive application.

3.2 INSTALLATION

3.2.1 Vinyl Wall Covering

Wall covering shall be installed in accordance with the manufacturer's installation instructions. Glue and adhesive spillage shall be immediately removed from wall covering face and seams with a remover recommended by the manufacturer. After the installation is complete, the fabric wall covering shall be thoroughly vacuumed with a ceiling to floor motion.

3.3 CLEAN-UP

Upon completion of the work, wall covering shall be left clean and free of dirt or soiling.

-- End of Section --

SECTION TABLE OF CONTENTS

DIVISION 10 - SPECIALTIES

SECTION 10100

MISCELLANEOUS ITEMS

PART 1 GENERAL

1.1 GENERAL REQUIREMENTS
1.2 SUBMITTALS

PART 2 MATERIALS

2.1 FIRE EXTINGUISHER CABINETS
2.1.1 Fire Extinguisher Wall Brackets
2.2 TACKBOARDS (F3025)
2.2.1 Cork
2.2.2 Fabric for Tackboard

PART 3 EXECUTION

3.1 INSTALLATION

-- End of Section Table of Contents --

SECTION 10100

MISCELLANEOUS ITEMS

PART 1 GENERAL

1.1 GENERAL REQUIREMENTS

Supplementary parts necessary to complete each item shall be included even though such work is not shown definitely or specified. The Contractor shall furnish to the proper trades, all anchors, sockets, or fastenings required for securing items to other construction. Details and specifications of items for which standard products are available, are representative guides of requirements for such items. Standard products, generally meeting such requirements, will be accepted, if details of construction and installation are approved by the Contracting Officer. Gages of sheet iron and steel specified are U.S. Standard for sheet and plate. Extruded section shall be at least 1/8-inch thick, unless otherwise specified or shown on the drawings.

1.2 SUBMITTALS

Government approval is required for submittals with a "GA" designation; submittals having an "FIO" designation are for information only. The following shall be submitted in accordance with Section 01300 SUBMITTAL PROCEDURES:

SD-02, Data

Fire Extinguisher Cabinets and Wall Brackets; FIO. Tack Boards; FIO.

SD-04, Drawings

Fire Extinguisher Cabinets and Wall Brackets; FIO. Tack Boards; FIO.

Shop drawings showing sizes, details of construction, method of construction, method of assembling, hardware materials, colors, method of mounting, location of each item, installation of items, and other details shall be submitted for all items specified herein. Materials fabricated or delivered to the job site before approval of the shop drawings shall be subject to rejection.

PART 2 MATERIALS

2.1 FIRE EXTINGUISHER CABINETS

Metal fire extinguisher cabinets shall be furnished and installed where shown on the drawings or specified. Cabinets shall be of the semi-recessed type suitable for 2-1/2 gallon extinguishers. Box and trim shall be of heavy gage rolled steel. Door shall be a rigid frame with full length piano type hinge and double strength (DSA) glass panel with roller latch. Door and box shall be prime-coated inside and out, with a enamel finish coat.

2.1.1 Fire Extinguisher Wall Brackets

Provide manufacturer's standard wall brackets in locations other than where cabinets are located as indicated on the Drawings.

2.2 TACKBOARDS (F3025)

2.2.1 Cork

Tackboard shall consist of a minimum 1/8 inch thick colored cork with burlap backing laminated to a minimum 3/8 inch thick insulation board or fiber board, and shall have an oak frame. The size shall be as indicated on the Drawings.

2.2.2 Fabric for Tackboard

Tackboard fabric shall meet Tek-Wall Lustra as manufactured by Maharam. Fabric shall consist of 100% polyolefin, minimum size 54 inches, backing shall be acrylic, finished weight a minimimum of 15.5 ounces. Flammability classification shall meet requirements of a flame spread of 15 and smoke test of 45.

PART 3 EXECUTION

3.1 INSTALLATION

Install in accordance with manufacturer's instructions.

-- End of Section --

SECTION TABLE OF CONTENTS

DIVISION 10 - SPECIALTIES

SECTION 10160

TOILET PARTITIONS

08/94

PART 1 GENERAL

1.1 REFERENCES
1.2 SYSTEM DESCRIPTION
1.3 SUBMITTALS
1.4 DELIVERY, STORAGE, AND HANDLING
1.5 WARRANTY

PART 2 PRODUCTS

2.1 TOILET ENCLOSURES
2.2 URINAL SCREENS
2.3 HARDWARE
2.4 COLORS

PART 3 EXECUTION

3.1 INSTALLATION
3.2 ADJUSTING AND CLEANING

-- End of Section Table of Contents --

SECTION 10160

TOILET PARTITIONS
08/94

PART 1 GENERAL

1.1 REFERENCES

The publications listed below form a part of this specification to the extent referenced. The publications are referred to in the text by basic designation only.

CODE OF FEDERAL REGULATIONS (CFR)

CFR 28 Part 36	Americans with Disabilities Act Accessibility Guidelines

FEDERAL SPECIFICATIONS (FS)

FS RR-P-1352	(Rev C) Partitions, Toilet, Complete

FEDERAL STANDARDS (FED-STD)

FED-STD 795	(Basic) Uniform Federal Accessibility Standards

1.2 SYSTEM DESCRIPTION

Toilet partition system, including toilet enclosures, room entrance screens, and urinal screens, shall be a complete and usable system of panels, hardware, and support components. The partition system shall be provided by a single manufacturer and shall be a standard product as shown in the most recent catalog data. The partition system shall comply with FED-STD 795 and CFR 28 Part 36 for areas as shown.

1.3 SUBMITTALS

Government approval is required for submittals with a "GA" designation; submittals having an "FIO" designation are for information only. The following shall be submitted in accordance with Section 01300 SUBMITTAL PROCEDURES:

SD-01 Data

Toilet Partition System; FIO.

Manufacturer's technical data and catalog cuts including installation and cleaning instructions.

SD-04 Drawings

Toilet Partition System; FIO.

Drawings showing plans, elevations, details of construction, hardware, reinforcing, fittings, mountings, and anchorings.

SD-14 Samples

Toilet Partition System; GA.

Manufacturer's standard color charts and color samples.

1.4 DELIVERY, STORAGE, AND HANDLING

Components shall be delivered to the jobsite in the manufacturer's original packaging with the brand, item identification, and project reference clearly marked. Components shall be stored in a dry location that is adequately ventilated and free from dust, water, or other contaminants and shall have easy access for inspection and handling.

1.5 WARRANTY

Manufacturer's standard performance guarantees or warranties that extend beyond a 1 year period shall be provided.

PART 2 PRODUCTS

2.1 TOILET ENCLOSURES

Toilet enclosures shall conform to FS RR-P-1352, Type I, Style A. Width, length and height of toilet enclosures shall be as shown. Finish surface of panels shall be laminated plastic finish 4. Panels indicated to receive toilet paper holders or grab bars as specified in Section 10800 TOILET ACCESSORIES shall be reinforced for the reception of the items required. Grab bars shall comply with FED-STD 795 and CFR 28 Part 36.

2.2 URINAL SCREENS

Urinal screens shall conform to FS RR-P-1352, Type III, Style A. Finish surface of screens shall be laminated plastic finish 4. Width and height of urinal screens shall be as shown.

2.3 HARDWARE

Hardware for the toilet partition system shall conform to FS RR-P-1352 for the specified type and style of partitions. Hardware finish shall be highly resistant to alkalies, urine, and other common toilet room acids.

2.4 COLORS

Color of finishes for toilet partition system components shall be as indicated on the Drawings.

PART 3 EXECUTION

3.1 INSTALLATION

Toilet partitions shall be installed straight and plumb in accordance with approved manufacturer's instructions with horizontal lines level and rigidly anchored to the supporting construction. Where indicated, anchorage to walls shall be by through-bolting or toggle-bolting. Drilling and cutting for installation of anchors shall be at locations that will be concealed in the finished work.

3.2 ADJUSTING AND CLEANING

Doors shall have a uniform vertical edge clearance of approximately 3/16 inch and shall rest open at approximately 30 degrees when unlatched. Toilet partitions shall be cleaned in accordance with approved manufacturer's instructions and shall be protected from damage until accepted.

-- End of Section --

SECTION TABLE OF CONTENTS

DIVISION 10 - SPECIALTIES

SECTION 10260

WALL AND CORNER PROTECTION

02/92

PART 1 GENERAL

1.1 REFERENCES
1.2 SUBMITTALS
1.3 DELIVERY AND STORAGE

PART 2 PRODUCTS

2.1 GENERAL
2.1.1 Resilient Material
2.1.1.1 Minimum Impact Resistance
2.1.1.2 Fire Rating
2.1.1.3 Integral Color
2.2 CORNER GUARDS
2.2.1 Resilient Corner Guards
2.3 WALL GUARDS
2.3.1 Combination Handrail/Wall Guards
2.3.1.1 Combination Handrail/Wall Guards
2.4 FASTENERS AND ANCHORS
2.5 FINISH
2.5.1 Resilient Material Finish

PART 3 EXECUTION

3.1 INSTALLATION
3.1.1 Corner Guards and Wall Guards

-- End of Section Table of Contents --

SECTION 10260

WALL AND CORNER PROTECTION
02/92

PART 1 GENERAL

1.1 REFERENCES

The publications listed below form a part of this specification to the extent referenced. The publications are referred to in the text by basic designation only.

AMERICAN SOCIETY FOR TESTING AND MATERIALS (ASTM)

ASTM B 221	(1993) Aluminum and Aluminum-Alloy Extruded Bars, Rods, Wire, Shapes, and Tubes
ASTM D 256	(1993a) Determining the Pendulum Impact Resistance of Notched Specimens of Plastics
ASTM D 635	(1991) Rate of Burning and/or Extent and Time of Burning of Self-Supporting Plastics in a Horizontal Position
ASTM E 84	(1994) Surface Burning Characteristics of Building Materials

FEDERAL STANDARDS (FED-STD)

FED-STD 795	(Basic) Uniform Federal Accessibility Standards

SOCIETY OF AMERICAN AUTOMOTIVE ENGINEERS (SAE)

SAE J1545	(1986) Instrumental Color Difference Measurement for Exterior Finishes, Textiles and Color Trim

1.2 SUBMITTALS

Government approval is required for submittals with a "GA" designation; submittals having an "FIO" designation are for information only. The following shall be submitted in accordance with Section 01300 SUBMITTAL PROCEDURES:

SD-01 Data

Corner Guards; FIO. Wall Guards; FIO.

Manufacturer's descriptive data, catalog cuts, and installation instructions, and recommended cleaning instructions.

SD-04 Drawings

Corner Guards; FIO. Wall Guards; FIO.

Drawings indicating locations and typical elevations of each type of item. Drawings shall show vertical and horizontal dimensions, full size sections, thickness of materials, and fastening details.

SD-13 Certificates

Corner Guards; FIO. Wall Guards; FIO.

Statements attesting that the items comply with specified fire and safety code requirements.

SD-14 Samples

Finish; FIO.

Manufacturer's standard samples indicating color and texture of materials requiring color and finish selection.

1.3 DELIVERY AND STORAGE

Materials shall be delivered to the project site in manufacturer's original unopened containers with seals unbroken and labels and trademarks intact. Materials shall be kept dry, protected from weather and damage, and stored under cover. Materials shall be stored at approximately 70 degrees F for at least 48 hours prior to installation.

PART 2 PRODUCTS

2.1 GENERAL

To the maximum extent possible, corner guards and wall guards (bumper guards), shall be the standard products of a single manufacturer and shall be furnished as detailed. Drawings show general configuration of products required, and items differing in minor details from those shown will be acceptable.

2.1.1 Resilient Material

Resilient material shall consist of extruded acrylic vinyl and shall conform to the following:

2.1.1.1 Minimum Impact Resistance

Minimum impact resistance shall be 18 ft.lbs when tested in accordance with ASTM D 256, (Izod impact, ft.lbs per inch notch).

2.1.1.2 Fire Rating

Fire rating shall be Class 1 when tested in accordance with ASTM E 84, having a maximum flame spread of 25 and a smoke developed rating of 450 or less. Material shall be rated self extinguishing when tested in accordance with ASTM D 635. Material shall be labeled and tested by Underwriters Laboratories or other approved testing laboratory.

2.1.1.3 Integral Color

Colored components shall have integral color and shall be matched in

accordance with SAE J1545 to within plus or minus 1.0 on the CIE-LCH scales.

2.2 CORNER GUARDS

2.2.1 Resilient Corner Guards

Corner guard units shall be surface mounted type, radius formed to profile shown. Corner guards shall extend from top of base to ceiling. Mounting hardware, cushions, and base plates shall be furnished. Assembly shall consist of a snap-on corner guard formed from resilient material, minimum 0.078 inch thick, mounted on a continuous retainer. Extruded aluminum retainer shall conform to ASTM B 221, alloy 6063, temper T5 or T6. Factory fabricated end closure caps shall be furnished for top and bottom of surface mounted corner guards. Insulating materials that are an integral part of the corner guard system shall be provided by the manufacturer of the corner guard system. Exposed metal portions of fire rated assemblies shall have a paintable surface.

2.3 WALL GUARDS

2.3.1 Combination Handrail/Wall Guards

Wall guards, combination handrail/wall guards, and handrails shall be provided with prefabricated end closure caps, inside and outside corners, concealed splices, cushions, mounting hardware and other accessories standard with the manufacturer. Extruded aluminum retainers shall conform to ASTM B 221, alloy 6063, temper T6. End caps and corners shall be field adjustable to assure close alignment with handrails and wall guards.

2.3.1.1 Combination Handrail/Wall Guards

Combination handrail/wall guards shall consist of snap-on covers of resilient material, minimum 0.078 inch thick, on a continuous, extruded aluminum retainer, minimum 0.072 inch thick anchored to wall at maximum 32 inches on center. Handrails shall be in accordance with FED-STD 795.

2.4 FASTENERS AND ANCHORS

Fasteners and anchors shall be provided for each specific installation.

2.5 FINISH

2.5.1 Resilient Material Finish

Finish for resilient material shall be embossed texture with colors in accordance with SAE J1545 and in accordance with the Drawings.

PART 3 EXECUTION

3.1 INSTALLATION

3.1.1 Corner Guards and Wall Guards

Material shall be mounted at location indicated in accordance with manufacturer's recommendations.

-- End of Section --

SECTION TABLE OF CONTENTS

DIVISION 10 - SPECIALTIES

SECTION 10430

EXTERIOR SIGNAGE

04/89

PART 1 GENERAL

1.1 REFERENCES
1.2 GENERAL
1.3 SUBMITTALS
1.4 DELIVERY AND STORAGE

PART 2 PRODUCTS

2.1 ALUMINUM ALLOY PRODUCTS
2.2 ORGANIC COATING
2.3 STEEL PRODUCTS
2.4 VINYL SHEETING FOR GRAPHICS
2.5 FIBER-REINFORCED POLYESTER (FRP)
2.6 ACRYLIC SHEET
2.7 POLYCARBONATE SHEET
2.8 ANCHORS AND FASTENERS
2.9 SHOP FABRICATION AND MANUFACTURE
2.9.1 Workmanship
2.9.2 Dissimilar Materials
2.9.3 Shop Painting
2.10 PANEL AND POST/PANEL TYPE SIGNS
2.10.1 Posts
2.10.2 Panel Framing System
2.10.3 Panels
2.10.4 Finishes
2.10.5 Mounting
2.11 GRAPHICS FOR POST/PANEL TYPE SIGNS
2.11.1 Tactile Graphics
2.11.2 Graphics
2.11.3 Messages
2.12 PRESSURE SENSITIVE LETTERS
2.12.1 Typeface
2.12.2 Size
2.12.3 Color

PART 3 EXECUTION

3.1 INSTALLATION
3.1.1 Anchorage
3.1.2 Protection and Cleaning

-- End of Section Table of Contents --

SECTION 10430

EXTERIOR SIGNAGE
04/89

PART 1 GENERAL

1.1 REFERENCES

The publications listed below form a part of this specification to the extent referenced. The publications are referred to in the text by basic designation only.

AMERICAN NATIONAL STANDARDS INSTITUTE (ANSI)

ANSI Z97.1	(1989) Safety Glazing Materials Used in Buildings

AMERICAN SOCIETY FOR TESTING AND MATERIALS (ASTM)

ASTM A 36	(1991) Structural Steel
ASTM A 123	(1989a) Zinc (Hot-Dip Galvanized) Coatings on Iron and Steel Products
ASTM A 525	(1991b) General Requirement for Steel Sheet, Zinc-Coated (Galvanized) by the Hot-Dip Process
ASTM A 570	(1991) Steel, Sheet and Strip, Carbon, Hot-Rolled, Structural Quality
ASTM B 26	(1992a) Aluminum-Alloy Sand Castings
ASTM B 108	(1992a) Aluminum-Alloy Permanent Mold Castings
ASTM B 209	(1992a) Aluminum and Aluminum-Alloy Sheet and Plate
ASTM B 221	(1992a) Aluminum and Aluminum-Alloy Extruded Bars, Rods, Wire, Shapes, and Tubes
ASTM D 3841	(1988) Glass-Fiber-Reinforced Polyester Plastic Panels

AMERICAN WELDING SOCIETY (AWS)

AWS D1.1	(1992) Structural Welding Code - Steel

FEDERAL STANDARDS (FED-STD)

FED-STD 795	(Basic) Uniform Federal Accessibility Standards

MILITARY SPECIFICATIONS (MS)

MS MIL-M-43719	(Rev B; Am 1) Marking Materials and Markers, Adhesive, Elastomeric, Pigmented

NATIONAL ASSOCIATION OF ARCHITECTURAL METAL MANUFACTURERS (NAAMM)

NAAMM AMP 505	(1988) Metal Finishes Manual for Architectural and Metal Products; Section: Applied Coatings

SOCIETY OF AUTOMOTIVE ENGINEERS (SAE)

SAE AMS 3611	(1964; Rev C) Plastic Sheet, Polycarbonate, General Purpose

1.2 GENERAL

Exterior signage shall be of the size and type shown on the drawings, shall conform to the requirements specified herein, and shall be provided at the locations indicated. Signs shall be complete with lettering, framing as detailed, and related components for a complete installation. Materials and equipment shall be the standard product of a manufacturer regularly engaged in the manufacture of the products. Items of equipment shall essentially duplicate equipment that has been in satisfactory use at least 2 years prior to bid opening.

1.3 SUBMITTALS

Government approval is required for submittals with a "GA" designation; submittals having an "FIO" designation are for information only. The following shall be submitted in accordance with Section 01300 SUBMITTAL DESCRIPTIONS:

SD-04 Drawings

Exterior signs; FIO.

Drawings including elevations of each type of sign; dimensions, details, and methods of mounting or anchoring; shape and thickness of materials; and details of construction. A schedule showing the location of each sign type shall be included.

SD-06 Instructions

Exterior Signs; FIO.

Manufacturer's descriptive data, catalog cuts, and installation instructions.

SD-14 Samples

Exterior Signs; FIO.

One sample of each type of sign. Each sample shall consist of a complete sign panel with letters and symbols. Samples may be installed in the work, provided each sample is identified and location recorded. Two samples of manufacturer's standard color chips for each material requiring color selection.

1.4 DELIVERY AND STORAGE

Materials shall be wrapped for shipment and storage, delivered to the jobsite in manufacturer's original packaging, and stored in a clean, dry area.

PART 2 PRODUCTS

2.1 ALUMINUM ALLOY PRODUCTS

Aluminum alloy products shall conform to ASTM B 209 for sheet or plate, ASTM B 221 for extrusions and ASTM B 26 or ASTM B 108 for castings, as applicable. Aluminum extrusions shall be provided at least 1/8 inch thick and aluminum plate or sheet at least 16 gauge, 0.0508 inch thick.

2.2 ORGANIC COATING

Surfaces shall be cleaned, primed, and given a semi-gloss baked enamel or two-component acrylic polyurethane finish in accordance with NAAMM AMP 505 with total dry film thickness not less than 1.2 mils.

2.3 STEEL PRODUCTS

ASTM A 36 for structural steel, ASTM A 570 for sheet and strip.

2.4 VINYL SHEETING FOR GRAPHICS

MS MIL-M-43719, minimum 0.003 inch film thickness. Film shall include a precoated pressure sensitive adhesive backing, Class 1, or positionable pressure sensitive adhesive backing, Class 3.

2.5 FIBER-REINFORCED POLYESTER (FRP)

ASTM D 3841, Type II, Grade 1, Class 124, as indicated.

2.6 ACRYLIC SHEET

ANSI Z97.1.

2.7 POLYCARBONATE SHEET

SAE AMS 3611.

2.8 ANCHORS AND FASTENERS

Exposed anchor and fastener materials shall be compatible with metal to which applied and shall match in color and finish.

2.9 SHOP FABRICATION AND MANUFACTURE

2.9.1 Workmanship

Work shall be assembled in the shop, insofar as practicable, ready for installation at the site. Work that cannot be shop assembled shall be given a trial fit in the shop to ensure proper field assembly. Holes for bolts and screws shall be drilled or punched. Drilling and punching shall produce clean, true lines and surfaces. Weld to or on structural steel in accordance with AWS D1.1. Welding shall be continuous along the entire

area of contact. Exposed welds shall be ground smooth. Exposed surfaces of work shall have a smooth finish and exposed riveting shall be flush. Fastenings shall be concealed where practicable. Items specified to be galvanized shall be by hot-dip process after fabrication if practicable. Galvanization shall be in accordance with ASTM A 123 and ASTM A 525, as applicable. Joints exposed to the weather shall be formed to exclude water. Drainage and weep holes shall be included as required to prevent condensation buildup.

2.9.2 Dissimilar Materials

Where dissimilar metals are in contact, or where aluminum is in contact with concrete, mortar, masonry, wet or pressure-treated wood, or absorptive materials subject to wetting, the surfaces shall be protected with a coat of asphalt varnish or a coat of zinc-molybdate primer to prevent galvanic or corrosive action.

2.9.3 Shop Painting

Surfaces of miscellaneous metal work, except nonferrous metal, corrosion resisting steel, and zinc-coated work, shall be given one coat of zinc-molybdate primer , or an approved rust-resisting treatment and metallic primer in accordance with manufacturer's standard practice. Do not paint surfaces of items to be embedded in concrete. Upon completion of work, thoroughly recoat all damaged surfaces.

2.10 PANEL AND POST/PANEL TYPE SIGNS

2.10.1 Posts

One-piece aluminum or galvanized steel posts shall be provided with minimum 0.125 inch wall thickness. Posts shall be designed to accept panel framing system described herein. The post shall be designed to permit attachment of panel framing system without exposed fasteners. Caps shall be provided for each post.

2.10.2 Panel Framing System

Panel framing consisting of aluminum sections and interlocking track components shall be designed to interlock with posts with concealed fasteners.

2.10.3 Panels

Modular message panels shall be provided in sizes shown on drawings. Panels shall be fabricated a minimum of 0.125 inch aluminum, 0.125 inch acrylic, or 0.125 inch FRP. Panels shall be designed to be interchangeable. Panels with metal return sheeting shall have welded corners, ground smooth. Heliarc weld panel to framing system.

2.10.4 Finishes

Post finish shall be semi-gloss baked enamel or two-component acrylic polyurethane. Metal panel framing system finish shall be baked enamel or two-component acrylic polyurethane.

2.10.5 Mounting

Permanent mounting shall be provided by embedding posts in concrete

foundation as shown.

2.11 GRAPHICS FOR POST/PANEL TYPE SIGNS

2.11.1 Tactile Graphics

Signage that provides emergency information, general circulation directions, or identification of spaces shall be tactile (perceptible to touch) and shall comply with FED-STD 795. Characters, symbols, or pictographs on tactile engraved signs shall be raised or recessed 1/32 inch minimum. Raised letters and numbers shall be sans serif upper case. Raised characters or symbols shall be at least 5/8 inch high, but no higher than a nominal 2 inches. Characters and symbols shall contrast in color with their background.

2.11.2 Graphics

Signage graphics shall conform to one of the following:

a. Pressure sensitive precision cut vinyl letters with reflecting surface shall be provided.

b. Message shall be applied to panel using the silkscreen process. Silkscreened images shall be executed with photo screens prepared from original art. No handcut screens will be accepted. Original art shall be defined as artwork that is a first generation stencil of the original specified art. Edges and corners shall be clean. Rounded corners, cut or ragged edges, edge buildup, bleeding or surfaces pinholes will not be accepted.

2.11.3 Messages

See Drawings for message content. Typeface: Helvetica medium. Type size as indicated. Color as indicated.

2.12 PRESSURE SENSITIVE LETTERS

Precision cut vinyl letters shall be provided. Edges and corners of finished letter forms and graphics shall be true and clean.

2.12.1 Typeface

As indicated on the Drawings.

2.12.2 Size

As indicated.

2.12.3 Color

As indicated.

PART 3 EXECUTION

3.1 INSTALLATION

Signs shall be installed at locations shown on the drawings. All signs shall be installed plumb and true at mounting heights indicated, and by method shown or specified. Signs mounted on other surfaces shall not be

installed until finishes on such surfaces have been completed.

3.1.1 Anchorage

Anchorage not otherwise specified or indicated shall include slotted inserts, expansion shields, and power-driven fasteners when approved for concrete; toggle bolts and through bolts for masonry; machine carriage bolts for steel; lag bolts and screws for wood.

3.1.2 Protection and Cleaning

The work shall be protected against damage during construction. Hardware and electrical equipment shall be adjusted for proper operation. Glass, frames, and other sign surfaces shall be cleaned.

-- End of Section --

SECTION TABLE OF CONTENTS

DIVISION 10 - SPECIALTIES

SECTION 10440

INTERIOR SIGNAGE

04/89

PART 1 GENERAL

1.1 REFERENCES
1.2 GENERAL
1.3 SUBMITTALS
1.4 DELIVERY AND STORAGE

PART 2 PRODUCTS

2.1 ALUMINUM ALLOY PRODUCTS
2.1.1 Organic Coating
2.2 VINYL SHEETING FOR GRAPHICS
2.3 ACRYLIC SHEET
2.4 ANCHORS AND FASTENERS
2.5 PRESSURE SENSITIVE NUMBERS
2.6 FABRICATION AND MANUFACTURE
2.6.1 Workmanship
2.6.2 Dissimilar Materials
2.7 PLAQUE SIGNS
2.7.1 Standard Modular Plaque Signs
2.7.2 Modular Changeable Message Strip Plaque Signs
2.7.3 Mounting of Plaque Signs
2.8 GRAPHICS
2.8.1 Tactile Graphics
2.8.2 Graphics Application
2.8.3 Messages

PART 3 EXECUTION

3.1 INSTALLATION
3.1.1 Anchorage
3.1.2 Protection and Cleaning

-- End of Section Table of Contents --

SECTION 10440

INTERIOR SIGNAGE
04/89

PART 1 GENERAL

1.1 REFERENCES

The publications listed below form a part of this specification to the extent referenced. The publications are referred to in the text by basic designation only.

ALUMINUM ASSOCIATION (AA)

AA PK-1	(1989) Registration Record of Aluminum Association Alloy Designations and Chemical Composition Limits for Aluminum Alloys in the Form of Castings and Ingot
AA SAA-46	(1978) Standards for Anodized Architectural Aluminum

AMERICAN ARCHITECTURAL MANUFACTURERS ASSOCIATION (AAMA)

AAMA 605.2	(1992) Voluntary Specification for High Performance Organic Coatings on Architectural Extrusions and Panels

AMERICAN NATIONAL STANDARDS INSTITUTE (ANSI)

ANSI Z97.1	(1984) Safety Glazing Materials Used in Buildings

AMERICAN SOCIETY FOR TESTING AND MATERIALS (ASTM)

ASTM B 209	(1992a) Aluminum and Aluminum-Alloy Sheet and Plate
ASTM B 221	(1992a) Aluminum and Aluminum-Alloy Extruded Bars, Rods, Wire, Shapes, and Tubes

FEDERAL SPECIFICATIONS (FS)

FS L-P-387	(Rev A; Am 1; Int Am 2) Plastic Sheet, Laminated, Thermosetting (for Designation Plates)

FEDERAL STANDARDS (FED-STD)

FED-STD 795	(Basic) Uniform Federal Accessibility Standards

MILITARY SPECIFICATIONS (MS)

MS MIL-M-43719	(Rev B; Am 1) Marking Materials and Markers, Adhesive, Elastomeric, Pigmented

1.2 GENERAL

Interior signage shall be of the sizes and types shown on the drawings, shall conform to the requirements specified herein, and shall be provided at the locations indicated. Signs shall be complete with lettering, framing as detailed, and related components for a complete installation. Signs shall be the standard product of a manufacturer regularly engaged in the manufacture of such products and shall essentially duplicate signs that have been in satisfactory use at least 2 years prior to bid opening.

1.3 SUBMITTALS

Government approval is required for submittals with a "GA" designation; submittals having an "FIO" designation are for information only. The following shall be submitted in accordance with Section 01300 SUBMITTAL DESCRIPTIONS:

SD-01 Data

Interior Signage; GA.

Manufacturer's descriptive data, catalogs cuts and installation instructions.

SD-04 Drawings

Interior Signage; FIO.
Drawings shall include elevations of each type of sign and shall show dimensions, details and methods of mounting or anchoring, shape and thickness of materials, and details of construction. A schedule showing the location of each sign type shall be included.

SD-14 Samples

Interior Signage; FIO.

Samples of the following signs showing typical quality and workmanship. The samples may be installed in the work, provided each sample is identified and location recorded.

a. Direction sign.

b. Door sign.

Two samples of manufacturer's standard color chips for each material requiring color selection.

1.4 DELIVERY AND STORAGE

Materials shall be delivered to the jobsite in manufacturer's original packaging and stored in a clean, dry area.

PART 2 PRODUCTS

2.1 ALUMINUM ALLOY PRODUCTS

Aluminum extrusions shall be at least 1/8 inch thick, and aluminum plate or sheet shall be at least 16 gauge, 0.0508 inch thick. Extrusions shall conform to ASTM B 221; plate and sheet shall conform to ASTM B 209. Where anodic coatings are specified, alloy shall conform to AA PK-1 alloy designation 514.0. Exposed anodized aluminum finishes shall be as shown and shall conform to AA SAA-46.

2.1.1 Organic Coating

Organic coating shall conform to AAMA 605.2, with total dry film thickness not less than 1.2 mils.

2.2 VINYL SHEETING FOR GRAPHICS

Vinyl sheeting for graphics shall conform to MS MIL-M-43719, minimum 0.003 inch film thickness. Film shall include a precoated pressure sensitive adhesive backing (Class 3).

2.3 ACRYLIC SHEET

Acrylic sheet for panels and components shall conform to ANSI Z97.1.

2.4 ANCHORS AND FASTENERS

Exposed anchor and fastener materials shall be compatible with metal to which applied and shall have matching color and finish.

2.5 PRESSURE SENSITIVE NUMBERS

Furnish and install 3/4 inch high pressure sensitive numbers. Locate as directed by the Contracting Officer on all doors, numbers on exterior doors shall be reflective. Contracting Officer shall provide nomenclature for each door.

2.6 FABRICATION AND MANUFACTURE

2.6.1 Workmanship

Holes for bolts and screws shall be drilled or punched. Drilling and punching shall produce clean, true lines and surfaces. Exposed surfaces of work shall have a smooth finish and exposed riveting shall be flush. Fastenings shall be concealed where practicable.

2.6.2 Dissimilar Materials

Where dissimilar metals are in contact, the surfaces will be protected to prevent galvanic or corrosive action.

2.7 PLAQUE SIGNS

Plaque signs shall be a modular type signage system. Signs shall be fabricated of Type ES melamine plastic conforming to FS L-P-387, Type NDP self-extinguishing or acrylic conforming to ANSI Z97.1 as shown.

2.7.1 Standard Modular Plaque Signs

Plaque signs shall consist of matte finish acrylic plastic, ES plastic, laminated to acrylic or plexiglass back, size as shown. Frames shall be aluminum as shown. Corners of signs shall match existing.

2.7.2 Modular Changeable Message Strip Plaque Signs

Changeable message strip plaque signs shall consist of acrylic or plexiglass back laminated to matte finish acrylic plastic, face with message slots as detailed for insertion of changeable message strips. Size of signs shall be as shown. Individual 1/16 inch thick message strips to permit removal, change, and reinsertion shall be provided as detailed. Corners of signs shall match existing.

2.7.3 Mounting of Plaque Signs

Extruded aluminum brackets, in finish to match existing, shall be furnished for hanging, projecting, and double-sided signs. Mounting for framed, hanging, and projecting signs shall be by holes and screws. Surface mounted signs shall be provided with 1/16 inch thick vinyl foam tape or countersunk mounting holes in plaques and mounting screws. Sign inserts shall be provided with 1/16 inch thick foam tape.

2.8 GRAPHICS

2.8.1 Tactile Graphics

Signage that provides emergency information, general circulation directions, or identification of rooms and spaces shall be tactile (perceptible to touch) and shall comply with FED-STD 795, paragraph 4.30. Characters, symbols, or pictographs on tactile signs shall be recessed or raised 1/32 inch minimum. Tactile letters and numbers shall be sans serif upper case. Tactile characters or symbols shall be at least 5/8 inch high, but no higher than a nominal 2 inches. Characters and symbols shall contrast with their background.

2.8.2 Graphics Application

Signage graphics shall conform to the following:

a. Pressure sensitive precision cut vinyl letters shall be provided.

b. Message shall be applied to panel using the silkscreen process. Silkscreened images shall be executed with photo screens prepared from original art. No handcut screens will be accepted. Original art shall be defined as artwork that is a first generation reproduction of the specified art. Edges and corners shall be clean.

2.8.3 Messages

See drawings and schedule for message content, typeface, type size and color. Additional text and changes will be provided by the Contracting Officer during the submittal process.

PART 3 EXECUTION

3.1 INSTALLATION

Signs shall be installed at locations shown on the drawings and as per

signage schedule. Signs shall be installed plumb and true at mounting heights indicated, and by method shown or specified. Signs on doors or other surfaces shall not be installed until finishes on such surfaces have been installed.

3.1.1 Anchorage

Anchorage not otherwise specified or indicated shall include slotted inserts, expansion shields, and power-driven fasteners when approved for concrete; toggle bolts and through bolts for masonry; machine carriage bolts for steel; lag bolts and screws for wood.

3.1.2 Protection and Cleaning

The work shall be protected against damage during construction. Hardware shall be adjusted for proper operation. Glass, frames, and other sign surfaces shall be cleaned.

-- End of Section --

SECTION TABLE OF CONTENTS

DIVISION 10 - SPECIALTIES

SECTION 10505

STEEL CLOTHING LOCKERS

09/95

PART 1 GENERAL

1.1 REFERENCES
1.2 SUBMITTALS
1.3 DELIVERY, HANDLING, AND STORAGE
1.4 FIELD MEASUREMENTS

PART 2 PRODUCTS

2.1 TYPES
2.2 MATERIAL
2.2.1 Galvanized Steel Sheet
2.2.2 Chromium Coating
2.2.3 Finish
2.2.3.1 Color
2.3 COMPONENTS
2.3.1 Built-In Locks
2.3.2 Coat Hooks
2.3.3 Hanger Rods
2.3.4 Door Handles
2.3.5 Doors
2.3.5.1 Hinges
2.3.5.2 Latching Mechanisms
2.3.6 Latch Strikes
2.3.7 Silencers
2.3.8 Back and Side Panels, Tops, and Bottoms
2.3.9 Shelves
2.3.10 Base Panels
2.3.11 Legs
2.3.12 Number Plates
2.3.13 Fastening Devices

PART 3 EXECUTION

3.1 ASSEMBLY AND INSTALLATION
3.2 FIELD QUALITY CONTROL
3.2.1 Testing
3.2.2 Repairing
3.2.3 Cleaning

-- End of Section Table of Contents --

SECTION 10505

STEEL CLOTHING LOCKERS
09/95

PART 1 GENERAL

1.1 REFERENCES

The publications listed below form a part of this specification to the extent referenced. The publications are referred to within the text by the basic designation only.

AMERICAN SOCIETY FOR TESTING AND MATERIALS (ASTM)

ASTM A 366/A 366M	(1991; R 1993) Steel, Sheet, Carbon, Cold-Rolled, Commercial Quality
ASTM A 569/A 569M	(1991; Rev. A, R 1993) Steel, Carbon (0.l5 Maximum, Percent), Hot-Rolled Sheet and Strip Commercial Quality
ASTM B 456	(1994) Electrodeposited Coatings of Copper Plus Nickel Plus Chromium and Nickel Plus Chromium

FEDERAL SPECIFICATIONS (FS)

FS AA-L-00486	(Rev. J) Lockers, Clothing, Steel

MILITARY SPECIFICATIONS (MIL)

MIL-C-22750	(Rev. E; Am. 1) Coating, Epoxy, VOC-Compliant
MIL-P-23377	(Rev. F) Primer Coatings: Epoxy, Chemical and Solvent Resistant

1.2 SUBMITTALS

Government approval is required for submittals with a "GA" designation; submittals having an "FIO" designation are for information only. The following shall be submitted in accordance with Section 01300 SUBMITTAL PROCEDURES:

SD-01, Data

Material; FIO. Finish; FIO. Locker components; FIO. Assembly instructions; FIO. Color chips; GA.

Provide a minimum of three color chips, not less than 3 inches square, of each color indicated.

SD-04, Drawings

Types; GA. Location; GA. Installation; GA.

Provide Drawings showing the types of lockers, locations and installation instructions.

1.3 DELIVERY, HANDLING, AND STORAGE

Deliver lockers and associated materials in their original packages, containers, or bundles bearing the manufacturer's name and the name of the material. Protect from weather, soil, and damage during delivery, storage, and construction.

1.4 FIELD MEASUREMENTS

To ensure proper fits, make field measurements prior to the preparation of drawings and fabrication.

PART 2 PRODUCTS

2.1 TYPES

FS AA-L-00486. Provide Type I, single-tier, Style 1 lockers in the location, quantities and sizes indicated. Provide locker finish colors as indicated. Provide lockers "set-up" (pre-assembled).

2.2 MATERIAL

2.2.1 Galvanized Steel Sheet

ASTM A 366/A 366M or ASTM A 569/A 569M, commercial quality, minimized spangle material. Prepare material surfaces for baked enamel finishing in accordance with FS AA-L-00486. Minimum uncoated sheet thickness as specified.

2.2.2 Chromium Coating

Nickel and chromium electrodeposited on the specified base metal. Conform to ASTM B 456, SC-3, as applicable to the base metal.

2.2.3 Finish

Primer, MIL-P-23377; topcoat, MIL-C-22750.

2.2.3.1 Color

As indicated on the Drawings.

2.3 COMPONENTS

2.3.1 Built-In Locks

FS AA-L-00486. Provide a padlock eye in the door latching mechanism.

2.3.2 Coat Hooks

FS AA-L-00486, chromium plated.

2.3.3 Hanger Rods

FS AA-L-00486.

2.3.4 Door Handles

FS AA-L-00486. Provide zinc alloy or steel handles with a chromium coating.

2.3.5 Doors

FS AA-L-00486, not less than 0.0598 inch thick steel sheet.

2.3.5.1 Hinges

In addition to the requirements of FS AA-L-00486, provide 5-knuckle hinges, minimum 2 inches high. Fabricate knuckle hinges from not less than 0.0747 inch thick steel sheet. A full height piano hinge may be provided if standard with the manufacturer. Weld or bolt hinges to the door frame. Weld, bolt, or rivet hinges to the door.

2.3.5.2 Latching Mechanisms

FS AA-L-00486.

2.3.6 Latch Strikes

FS AA-L-00486. Fabricate from not less than 0.0747 inch thick steel sheet, except latch strike may be continuous from top to bottom and fabricated as part of the door framing.

2.3.7 Silencers

FS AA-L-00486.

2.3.8 Back and Side Panels, Tops, and Bottoms

FS AA-L-00486, not less than 0.0474 inch thick steel sheet.

2.3.9 Shelves

FS AA-L-00486. Fabricate from not less than 0.0598 inch thick steel sheet.

2.3.10 Base Panels

FS AA-L-00486.

2.3.11 Legs

FS AA-L-00486.

2.3.12 Number Plates

Number plates are not required.

2.3.13 Fastening Devices

Provide bolts, nuts, and rivets as specified in FS AA-L-00486.

PART 3 EXECUTION

3.1 ASSEMBLY AND INSTALLATION

Assemble lockers according to the locker manufacturer's instructions.

Align lockers horizontally and vertically. Secure lockers to wall and base with screws as indicated. Bolt adjacent lockers together. Adjust doors to operate freely without sticking or binding and to ensure they close tightly.

3.2 FIELD QUALITY CONTROL

3.2.1 Testing

Government may request performance-characteristic tests on assembled lockers in accordance with FS AA-L-00486. Lockers not conforming will be rejected.

3.2.2 Repairing

Remove and replace damaged and unacceptable portions of completed work with new.

3.2.3 Cleaning

Clean surfaces of the work, and adjacent surfaces soiled as a result of the work, in an approved manner. Remove equipment, surplus materials, and rubbish from the site.

-- End of Section --

SECTION TABLE OF CONTENTS

DIVISION 10 - SPECIALTIES

SECTION 10800

TOILET ACCESSORIES

10/94

PART 1 GENERAL

1.1 REFERENCES
1.2 SUBMITTALS
1.3 DELIVERY, STORAGE, AND HANDLING

PART 2 PRODUCTS

2.1 MANUFACTURED UNITS
2.1.1 Anchors and Fasteners
2.1.2 Finishes
2.2 ACCESSORY ITEMS
2.2.1 Grab Bar (GB) (A5110)
2.2.2 Mirror, Glass (MG) (A1090, M8235)
2.2.3 Wall Mounted Paper Towel Dispenser (PTD) (A5080)
2.2.4 Sanitary Napkin and Tampon Disposal (SND) with Door (A5090)
2.2.5 Shelf with Mop and Broom Holders (A5135)
2.2.6 Shower Curtain Rods (SCR) (A5170)
2.2.7 Soap and Grab Bar Combination, Recessed (SGR) (A5175)
2.2.8 Built-in Shower Stall Bench (A5016)
2.2.9 Toilet Tissue Dispenser 2 Roll (TTD) (A5200)
2.2.10 Diaper Changing Station (DCS) (A4995)
2.2.11 Robe Hooks (A5145)

PART 3 EXECUTION

3.1 INSTALLATION

-- End of Section Table of Contents --

SECTION 10800

TOILET ACCESSORIES
10/94

PART 1 GENERAL

1.1 REFERENCES

The publications listed below form a part of this specification to the extent referenced. The publications are referred to in the text by basic designation only.

FEDERAL SPECIFICATIONS (FS)

FS DD-M-411	(Rev C) Mirrors, Glass
FS WW-P-541/GEN	(Rev E; Am 1) Plumbing Fixtures
FS WW-P-541/8	(Rev B; Am 1) Plumbing Fixtures (Accessories, Land Use)

1.2 SUBMITTALS

Government approval is required for submittals with a "GA" designation, submittals having an "FIO" designation are for information only. The following shall be submitted in accordance with Section 01300 SUBMITTAL PROCEDURES:

SD-01 Data

Finishes; FIO. Accessory Items; FIO.

Manufacturer's descriptive data and catalog cuts indicating materials of construction, fasteners proposed for use for each type of wall construction, mounting instructions, and operation instructions.

SD-14 Samples

Finishes; FIO. Accessory Items; FIO.

One sample of each accessory proposed for use.

SD-19 Operation and Maintenance Manuals

Four complete copies of maintenance instructions listing routine maintenance procedures and possible breakdowns and repairs. Instructions shall include simplified wiring and control diagrams and other information necessary for unit maintenance.

1.3 DELIVERY, STORAGE, AND HANDLING

Toilet accessories shall be wrapped for shipment and storage, delivered to the jobsite in manufacturer's original packaging and stored in a clean, dry area protected from construction damage and vandalism.

PART 2 PRODUCTS

2.1 MANUFACTURED UNITS

Toilet accessories shall be provided where indicated in accordance with toilet accessory schedule and equipment schedules as indicated on the Drawings. Each accessory item shall be complete with the necessary mounting plates, shall be of sturdy construction with corrosion resistant surface.

2.1.1 Anchors and Fasteners

Anchors and fasteners shall be capable of developing a restraining force commensurate with the strength of the accessory to be mounted and shall be suited for use with the supporting construction. Exposed fasteners shall be of tamperproof design and shall be finished to match the accessory.

2.1.2 Finishes

Finishes on metal shall be provided as follows:

Metal	Finish
Stainless steel	No. 4 satin finish
Carbon steel, copper alloy, and brass	Chromium plated, bright

2.2 ACCESSORY ITEMS

Accessory items shall conform to the requirements specified below.

2.2.1 Grab Bar (GB) (A5110)

Grab bar shall conform to FS WW-P-541/GEN and FS WW-P-541/8, Type IV, Class 2, 1-1/4 inches OD stainless steel. Grab bar shall be form, configuration and length as indicated. Concealed mounting flange shall have set screw mounting holes concealed on the lip of the flange. Grab bar shall have peened non-slip surface. Installed bars shall be capable of withstanding a 500 pound vertical load without coming loose from the fastenings and without obvious permanent deformation.

2.2.2 Mirror, Glass (MG) (A1090, M8235)

Glass mirror shall conform to FS DD-M-411. Provide ADA compatible tilting mirrors in locations as indicated on the Drawings.

2.2.3 Wall Mounted Paper Towel Dispenser (PTD) (A5080)

8" high x 11" wide x 6" deep. Fabricate of type 304 stainless steel. Minimum capacity of 400 single fold towels. Provide tumbler lock and piano hinge.

2.2.4 Sanitary Napkin and Tampon Disposal (SND) with Door (A5090)

CRS feminine napkin disposal. Fabricated of type 304 stainless steel. Capacity 1-6 gallon with removable leak-proof receptacle for disposable

liners. Fifty disposable liners of the type standard with the manufacturer shall be provided. Receptacle shall be retained in cabinet by tumbler lock. Disposer shall be provided with a door for inserting disposed napkins, and shall be surface mounted.

2.2.5 Shelf with Mop and Broom Holders (A5135)

Shelf with mop and broom holders shall be 18 gauge type 304 stainless steel, 8 inch deep and 48 inch in length with 6 holders.

2.2.6 Shower Curtain Rods (SCR) (A5170)

Shower curtain rod. 1 inch diameter, type 302, stainless steel tubing, length as required. For holding shower curtain.

2.2.7 Soap and Grab Bar Combination, Recessed (SGR) (A5175)

Soap dish and grab bar combination shall conform to FS WW-P-541/GEN or FS WW-P-541/8, Type 304 stainless steel, recessed type.

2.2.8 Built-in Shower Stall Bench (A5016)

Bench shall be 18 gauge stainless steel tubing frame. Seat consists of teakwood slats with rounded edges. Anchors or backing are built into the wall. Bench shall be fold up type.

2.2.9 Toilet Tissue Dispenser 2 Roll (TTD) (A5200)

Toilet tissue holder shall be Type II - surface mounted with two rolls of tissue mounted horizontally or stacked vertically. Cabinet shall be heavy guage stainless steel, polished finish. Furnished with 2 chromeplated roller, with heavy duty internal spring. Each support arm locks to conceal stainless steel mounted bracket.

2.2.10 Diaper Changing Station (DCS) (A4995)

Diaper changing station shall be wall mounted and shall be fabricated of high impact plastic with no sharp edges. Unit fold down platform shall be concave to the child's shape, equipped with nylon and velcro safety straps and engineered to withstand a minimum static load of 155 kg (250 lb). Unit shall have an integral dispenser for sanitary liners.

2.2.11 Robe Hooks (A5145)

Provide two hooks integral with the wall flange. Projection shall be not less than 1 5/8 inches from the back of the wall flange to the end of the hooks. Hooks shall be stainless steel, copper alloy, or aluminum alloy.

PART 3 EXECUTION

3.1 INSTALLATION

Toilet accessories shall be securely fastened to the supporting construction in accordance with the manufacturer's instructions. Accessories shall be protected from damage from the time of installation until acceptance.

-- End of Section --

SECTION TABLE OF CONTENTS

DIVISION 11 - EQUIPMENT

SECTION 11700

GENERAL REQUIREMENTS FOR MEDICAL EQUIPMENT

12/94

PART 1 GENERAL

1.1 REFERENCES
1.2 LOGISTICAL CLASSIFICATION
1.3 SUBMITTALS
1.4 QUALITY ASSURANCE
1.4.1 Materials and Equipment
1.4.2 Approved Installer
1.4.3 Alternative Service Record
1.4.4 Service Support
1.4.5 Manufacturer's Nameplate
1.4.6 Factory Inspection
1.4.7 Product Qualifications
1.4.8 Design Parameters
1.5 PACKAGING, STORAGE AND PROTECTION
1.5.1 Packaging
1.5.2 Storage of Government Furnished and Government installed Equipment
1.5.3 Storage and Protection

PART 2 PRODUCTS

2.1 MATERIALS
2.2 EQUIPMENT
2.2.1 Safety
2.2.2 Electrical Motors
2.2.3 Backflow Preventers
2.3 COMPONENTS
2.3.1 Mechanical
2.3.2 Electrical

PART 3 EXECUTION

3.1 EXAMINATION
3.2 PROTECTION
3.3 INSTALLATION
3.3.1 Mounting
3.3.2 Operation
3.4 FIELD INSPECTION
3.5 CLEANING AND ADJUSTING
3.6 OPERATING AND MAINTENANCE DATA

-- End of Section Table of Contents --

SECTION 11700

GENERAL REQUIREMENTS FOR MEDICAL EQUIPMENT
12/94

PART 1 GENERAL

1.1 REFERENCES

The publications listed below form a part of this specification to the extent referenced. The publications are referred to in the text by the basic designation only.

AMERICAN WATER WORKS ASSOCIATION (AWWA)

AWWA C510	1992 Double Check Valve Backflow-Prevention Assembly
AWWA C511	1992 Reduced-Pressure Principle Backflow-Prevention Assembly

CODE OF FEDERAL REGULATIONS (CFR)

21 CFR 701	Cosmetic Labeling Regulation for the Enforcement of the Federal Food, Drug and Cosmetics Act and for Packaging and Labeling Act

FOUNDATION FOR CROSS-CONNECTION CONTROL AND HYDRAULICRESEARCH (FCCCHR)

FCCCHR-USC	1992 List of Approved Backflow Prevention Assemblies

NATIONAL ELECTRICAL MANUFACTURERS ASSOCIATION (NEMA)

NEMA MG 1	1993 Motors and Generators

NATIONAL FIRE PROTECTION ASSOCIATION (NFPA)

NFPA 101	1994 Code for Safety to Life from Fire in Buildings and Structures

SHEET METAL & AIR CONDITIONING CONTRACTORS' NATIONALASSOCIATION, INC. (SMACNA)

SMACNA SRM	1991 Seismic Restraint Manual Guidelines for Mechanical Systems

UNDERWRITERS LABORATORIES INC. (UL)

UL 544	1993 (Bul. 1993 and 1994) Medical and Dental Equipment

1.2 LOGISTICAL CLASSIFICATION

Methods of procurement are defined as follows:

a. Category A: Contractor furnished and Contractor installed from construction funds (Construction Appropriations/Medical Construction Appropriations).

b. Category B: Government furnished from using service operating funds other than construction and installed by Contractor from construction funds (Construction Appropriations/Medical Construction Appropriations).

c. Category C: Government furnished and Government installed from existing assets or from funds other than construction.

d. Category D: Not Used.

e. Category E: Government furnished and contractor installed from Construction Appropriation/Medical Construction Appropriations funds. (Procurement to be delayed until the latest date feasible that will not interfere with project completion. This will provide the latest model of equipment at the time it is needed.)

f. Category F: Government furnished and Government (vendor) installed from Construction Appropriation/Medical Construction Appropriations funds. (Procurement to be delayed until the latest date feasible that will not interfere with project completion. This will provide the latest model of equipment at the time it is needed.)

g. Catagory G: Government furnished and installed equipment requiring special funding (not MILCON or project specific OM or OP dollars) and may require other justification and approvals.

1.3 SUBMITTALS

Government approval is required for submittals with a "GA" designation, submittals having an "FIO" designation are for information only. The following shall be submitted in accordance with Section 01300 SUBMITTAL DESCRIPTIONS:

SD-01 Data

Contractor-furnished medical and dental equipment; GA.

Submit within 60 days after award of contract, but before ordering equipment. Submit names and addresses of manufacturers, item's catalog numbers, trade names, literature, data sheets, diagrams, drawings, and other pertinent data for each referenced item to evaluate performance, dimensions, and appearance of the equipment and materials. Submit six copies of manufacturer's printed specifications and installation requirements.

SD-04 Drawings

Medical and dental equipment; GA.

Composite Coordinated Drawings:

Submit for equipment items that interface with other pieces of equipment or construction. Indicate the following:

a. Coordination of equipment services

b. Coordination of pertinent details of construction.

Installation Drawings:

Submit 6 copies showing the following. Verify job conditions affecting the work, and obtain accurate measurements for incorporation into the installation drawings.

a. Installation layout

b. Details of construction and rough-in requirements.

SD-07 Schedules

Contractor-furnished medical and dental equipment schedule; GA.

Schedule Requirements:

Submit six copies of schedule in loose leaf binder with index of Contractor-furnished medical and dental equipment list.

SD-08, Statements

Medical and dental equipment deviations; GA. Medical and dental equipment substitutions; GA. Backflow preventers Certificate of Full Approval; GA.

Standards Deviations:

Submit for approval a record of deviations from the following standards established for the specified product, before ordering equipment.

a. Size of equipment

b. Function of equipment

c. Standard and listed accessories

d. Equipment controls and performance of equipment

e. Construction of equipment.

Substitutions:

Submit before ordering equipment.

a. Size: Layouts shall be based on the unit specified. If the size of a substituted unit differs from the item specified and is accepted, submit to the Contracting Officer for approval a revised layout, design calculations, drawings, and specifications for changes in the building to accommodate the substituted equipment.

b. Function: Additional functions and accessories of substituted equipment will not be considered as an improvement over the unit specified. If such functions are standard equipment of a substituted item but the function is not desired by the Government, then it shall be at the discretion of the Government to either have the Contractor completely remove that function from the unit, if the unit is otherwise

acceptable, or allow the Contractor to retain that function on the unit under the following conditions:

(1) The function is fully operational and its performance complies with the terms and conditions of this specification, including product quality and warranty;

(2) The function shall in no way eliminate or modify those functions required by the Government on the specified unit. Refinement in control or accessibility of the substituted unit will be considered an improvement over the specified unit.

c: Appearance: Only the following aesthetic qualities of design will be considered an improvement:

(1) Uniformity of finish

(2) Variety of finish selections

(3) Compatibility with substituted item.

Certificate of Full Approval:

Submit a Certificate of Full Approval from the Foundation of Cross-Connection Control and Hydraulic Research (FCCCHR), University of Southern California, attesting that the design, size and make of each backflow preventer has satisfactorily passed the complete sequence of performance testing and evaluation for the respective level of approval. Certificate of Provisional Approval will not be acceptable.

SD-11, Factory Test Reports

Factory inspection; GA.

Submit 6 copies of the test reports required or specified and performed by an approved laboratory.

SD-13, Certificates

Materials and equipment; GA.

Before ordering, submit 6 copies of certificates attesting that materials and equipment meet the specified requirements.

Standards Compliance:

Submit one of the following as evidence of proof of conformance for materials or equipment specified to conform to the standards of organizations such as the American National Standards Institute (ANSI), American Society for Testing and Materials (ASTM), National Electrical Manufacturers Association (NEMA), American Society of Mechanical Engineers (ASME), American Gas Association (AGA), Air-Conditioning and Refrigeration Institute (ARI), and Underwriters Laboratories Inc. (UL).

a. If an organization uses a label or listing to indicate compliance with a particular standard, the label or listing will be acceptable evidence, unless otherwise specified in the individual sections.

b. In lieu of the label or listing, submit a certificate from an

independent testing organization which is competent to perform acceptable testing and is approved by the Contracting Officer. The certificate shall state that the item has been tested in accordance with the specified organization's test methods and that the item conforms to the specified organization's standard.

c. For materials and equipment whose compliance with organizational standards or specifications is not regulated by an organization using its own listing or label as proof of compliance, submit a certificate of compliance from the manufacturer for approval, identifying the manufacturer, product, and referenced standard and certification stating that the product conforms to the requirements of the project specification and the referenced standards listed.

SD-19, Operation and Maintenance Manuals

Medical and dental equipment, Data Package 3; GA.

Submit six copies of operation and maintenance data. Submit six copies of manual data for each unit of equipment furnished for the project.

1.4 QUALITY ASSURANCE

1.4.1 Materials and Equipment

Materials and equipment shall be standard products of a manufacturer regularly engaged in the manufacture of products which are of a similar material, design, and workmanship and are offered for sale on the commercial market through advertisements, manufacturer's catalogs, or sales brochures. The products shall have been in commercial or industrial use under similar circumstances and of similar size for 2 years prior to the bid opening.

1.4.2 Approved Installer

Goverment Furnished/Contractor Installed equipment shall have a installer approved by the Manufacturer.

1.4.3 Alternative Service Record

Products having less than a 2-year field service record will be acceptable if a certified record of the manufacturer's factory or laboratory tests demonstrating performance compliance is provided to the Contracting Officer.

1.4.4 Service Support

Equipment items shall be supported by service organizations located near the equipment installation, and able to service the equipment on a regular basis and respond immediately on emergency calls throughout the warranty period.

1.4.5 Manufacturer's Nameplate

Each piece of equipment shall have the manufacturer's name, address, model number, and serial number utility ranges or capacities, including voltage and amperage rating if electrically powered on the nameplate, securely affixed in a conspicuous place. The name of only the distributing agent on the plate is not acceptable.

1.4.6 Factory Inspection

Arrange and perform all factory inspections required by the technical sections of the specification, unless otherwise specified. Report these inspections in the daily report to the Government inspector.

1.4.7 Product Qualifications

The products specified by the technical sections of the specification establish standards for each item.

1.4.8 Design Parameters

Equipment furnished shall meet each of the following parameters specified in the technical sections.

a. Size of equipment

b. Function of equipment

c. Standard and listed accessories

d. Equipment controls and performance of equipment

e. Construction of equipment.

1.5 PACKAGING, STORAGE AND PROTECTION

1.5.1 Packaging

Package each piece of equipment to ensure protection from damage during shipment and delivery. Legibly indicate on the exterior of each container or crate, the shipping address and a brief description of its contents. Outside of the container, fasten a waterproof envelope containing a packing list and complete instructions for uncrating and setting the equipment in place.

1.5.2 Storage of Government Furnished and Government installed Equipment

Provide staging areas and access routes for the Government's installation of Government Furnished and Government Installed equipment. Coordinate with Contracting Officer and Facility Manager.

1.5.3 Storage and Protection

During storage and until completion and acceptance by the Contracting Officer, protect materials and equipment from damage. Before acceptance by the Contracting Officer, remove all protective coverings, thoroughly clean the inner and outer surfaces, and ensure that the equipment is free from defects.

PART 2 PRODUCTS

2.1 MATERIALS

Materials not specified otherwise shall be of the same quality used for the intended purpose in commercial practice. Equipment, materials, and articles incorporated in the work shall be new. Any deviations or substitutions shall be reported before ordering equipment.

2.2 EQUIPMENT

2.2.1 Safety

Medical equipment shall meet the requirements of OSHA 21 CFR 701, NFPA 101, and UL 544. In lieu of UL approval, consideration will be given to certified test reports from an approved laboratory meeting UL 544 requirements.

2.2.2 Electrical Motors

Unless otherwise shown, equipment with motors of 1/2 horsepower or less shall be suitable for operation from a 120-volt, single-phase, 60 Hz supply. Motors shall be of sufficient size for the duty to be performed and shall not exceed the nameplate rating when driven equipment is operating at specified capacity under the most severe conditions. Fractional horsepower motors shall conform to NEMA MG 1.

2.2.3 Backflow Preventers

Reduced pressure principle type conforming to the applicable requirements of AWWA C510, AWWA C511 and FCCCHR-USC.

2.3 COMPONENTS

2.3.1 Mechanical

Components, such as piping, valves, and controls, shall conform to the requirements specified in Section 15405, "Plumbing."

2.3.2 Electrical

Provide components of equipment and systems, such as motors, starters, and controls as specified for complete operable systems. Extended voltage-range motors are prohibited. Provide interconnecting wiring for components of packaged equipment as an integral part of the equipment. Provide interconnecting power wiring and conduit for field-erected equipment and control wiring and conduit. Motor control equipment forming part of the motor control centers or switchgear assemblies and the necessary conduit and wiring connecting such assemblies, centers, or other power sources to the equipment.

PART 3 EXECUTION

3.1 EXAMINATION

Before laying out the equipment, inspect the site of work. Report to the Contracting Officer damage to the building, including piping and wiring systems related to and affecting the installation of the equipment.

3.2 PROTECTION

Make provisions to prevent electrolysis where dissimilar metal parts are welded or otherwise fastened together.

3.3 INSTALLATION

Set and connect the equipment plumb and true to level in accordance with

the manufacturer's instructions and recommendations. Attach items and accessories. Make connections between equipment and other work in a neat manner, and install the equipment so as not to damage other work. Coordinate installation of Government Furnished and Government Installed Equipment with Contracting Officer and Facility Manager. For equipment installed by the Government, the Contractor shall make preparations for installation, as indicated.

3.3.1 Mounting

Mount the equipment according to SMACNA SRM seismic restraints guidelines.

3.3.2 Operation

Provide all items necessary to make equipment operational.

3.4 FIELD INSPECTION

Notify the Contracting Officer 5 days before the scheduled inspection. Perform acceptance inspection of the finished work with the Contracting Officer to examine each item to ensure that the equipment is operational.

3.5 CLEANING AND ADJUSTING

Clean and adjust equipment. Lubricate moving parts, and test the equipment in accordance with the manufacturer's instructions. Clean the medical equipment, both inside and outside. Ensure that equipment is free from defects.

3.6 OPERATING AND MAINTENANCE DATA

Attach a copy of the operation and maintenance data for each piece of equipment to its respective equipment.

-- End of Section --

SECTION TABLE OF CONTENTS

DIVISION 11 - EQUIPMENT

SECTION 11702

MEDICAL EQUIPMENT, MISCELLANEOUS

12/94

PART 1 GENERAL

1.1 REFERENCES
1.2 RELATED REQUIREMENTS
1.3 SUBMITTALS

PART 2 PRODUCTS

2.1 MATERIALS
2.2 ITEMS
2.2.1 Ceiling Mounted I.V. Support Systems (A1160)
2.2.2 Cubical Track with Curtain (A5180)
2.2.3 Audio Booth (M0050)
2.2.4 Film Illuminators
2.2.4.1 Double Film Illuminators (X3930)
2.2.5 4 Panel Film Illuminator (X3990)
2.2.6 Magazine Rack (F2300)
2.2.7 Patient Chart Holder (M1620)
2.2.8 Storage Shelving (M2080)
2.2.9 Shatterproof Safty Mirrors (M8235)

PART 3 EXECUTION

3.1 INSTALLATION
3.2 FIELD QUALITY CONTROL
3.2.1 Tests
3.2.2 Inspection

-- End of Section Table of Contents --

SECTION 11702

MEDICAL EQUIPMENT, MISCELLANEOUS
12/94

PART 1 GENERAL

1.1 REFERENCES

The publications listed below form a part of this specification to the extent referenced. The publications are referred to in the text by the basic designation only.

AMERICAN ASSOCIATION OF TEXTILE CHEMISTS AND COLORISTS (AATCC)

AATCC 16	(1993) Test Method: Colorfastness to Light

AMERICAN SOCIETY FOR TESTING AND MATERIALS (ASTM)

ASTM A 167	1994 Stainless and Heat-Resisting Chromium-Nickel Steel Plate, Sheet, and Strip
ASTM A 366/A 366M	1991 (R 1993) Steel, Sheet, Carbon, Cold-Rolled, Commercial Quality
ASTM B 221	1993 Aluminum and Aluminum-Alloy Extruded Bars, Rods, Wire, Shapes, and Tubes

MILITARY STANDARDS (MIL-STD)

MIL-STD-1691	(Rev. E) Construction and Material Schedule for Military Medical and Dental Facilities

NATIONAL ELECTRICAL MANUFACTURERS ASSOCIATION (NEMA)

NEMA LD 3	1991 High-Pressure Decorative Laminates

1.2 RELATED REQUIREMENTS

Section 11700, "General Requirements for Medical Equipment" applies to this section with the additions and modifications specified herein.

1.3 SUBMITTALS

Government approval is required for submittals with a "GA" designation; submittals having an "FIO" designation are for information only. The following shall be submitted in accordance with Section 01300 SUBMITTAL DESCRIPTIONS:

SD-01 Data

Ceiling Mounted I.V. Support System; GA. Cubical Track with curtain; GA.

Double Film Illuminator; GA. 4 Panel Film Illuminator GA Magazine Rack; GA. Patient Chart Holder; GA. Storage Shelving; GA.

Manufacturer's catalog cuts, descriptive data, and installation instructions.

SD-04 Drawings

Ceiling Mounted I.V. Support System; GA. Cubical Track with Curtain; GA. Double Film Illuminator; GA. 4 Panel Film Illuminator; GA. Magazine Rack ; GA. Patient Chart Holder; GA. Storage Shelving; GA.

Drawings indicating thickness of lead at all locations; construction at floor, walls, ceiling, and columns; details of lead laps and lap securing methods; fastenings, profiles, details of items and accessories penetrating the shielding materials; and any special method of construction.

SD-19, Operation and Maintenance Manuals

Ceiling Mounted I.V. Support System; GA. Cubical Track with Curtain; GA. Double Film Illuminator; GA. 4 Panel Film Illuminator; GA. Magazine Rack ; GA. Patient Chart Holder; GA. Storage Shelving; GA.

Submit data package in accordance with Division 1, General Requirements.

PART 2 PRODUCTS

2.1 MATERIALS

Items not specified otherwise shall conform to the following requirements:

a. Aluminum Alloy: Equivalent in ultimate tensile, yield, and shear strengths to Alloy 6063-T5 or 6063-T6; conforming to ASTM B 221.

b. Carbon Steel: ASTM A 366/A 366M.

c. Laminated Plastic: NEMA LD 3; colors and patterns as selected by the Contracting Officer from the manufacturer's standard colors and patterns.

d. Stainless Steel: ASTM A 167, Type 301, 302, or 304. Exposed surfaces shall have a satin finish or a minimum No. 3 polished finish.

2.2 ITEMS

Items are listed by Joint Schedule Number (JSN) referenced from MIL-STD-1691.

2.2.1 Ceiling Mounted I.V. Support Systems (A1160)

Ceiling mounted 16 ga. extruded aluminum channel track, 4' x 7' oval. Include corrosion resistant trolley with self-locking hinge and stainless steel hook for bottle hanger attachment. Curve at 12" radius. Anodized finish. I.V. carriers (one per track) shall consist of plated steel block supported from four nonconductive nylon ball-bearing wheels and equipped with 180 degree twist lock with nylon washer. Track shall be equipped with splicing clamps with removable gate to permit carrier replacement.
Similiar to No. 1100-I.V. Track and No. 1185 Carrier as manufactured by ADC Hospital Equipment, a Division of Automatic Devices Company or equal.

2.2.2 Cubical Track with Curtain (A5180)

15 gauge extruded aluminum anodized surface mounted cubical track, with curtain. Similiar to Model No. 1100 as manufactured by Cubi-Trac or equal. Carrier spacing shall be minimum of 6 inches. Carrier block shall be supported from 2 nylon wheels with plated swivel and curtain hook. Similiar to Model No. 1101 as manufactured by Cubi-Trac or equal. Provide track with Removable end stops similiar to Model No. 1110 as manufactured by Cubi-Trac or equal.

..SUBPART
2.2.7.1 Cubicle Curtain System

Cubicle curtains similar to Clambake, Style Number C823/2, Color Dusk, Content 100% Inherently Flame Resistant Trevira FR Polyester, Width 72 inches. Shall be in accordance with AATCC 16.

2.2.3 Audio Booth (M0050)

Double wall audiometric examination booth. This unit may be prefabricated with interior dimensions of approximately 78 inches high by 36 inches wide by 40 inches long. The composite sheet metal and sound absorbing assembly have a minimum overall noise-reduction coefficient of 0.95. Option of right or left hand door. Similiar to Model 400, A Series as manufactured by Industrial Acoustics Company or equal.

2.2.4 Film Illuminators

Box construction of spot welded 22 gauge cold rolled steel with smoke grey finish inside and out. Knockouts for mounting and electrical conduit shall be provided. A removable reflector of 26 gauge cold rolled steel finished in baked white enamel. Electrical requirements shall be for each illuminator provide two 15 watt daylight type F15T8D, vertically mounted lamps per illuminator. Each illuminator is controlled by a toggle switch mounted in upper front panel. A separate ballast and starter are installed for each lamp. Line cord shall be 6 foot long with a 3 conductor polarized plug. Viewing panel of one piece 1/8 inch thick white plastic. Upper edge held in place by film retainer. Lower edge extends to bottom of illuminator and is held in place by two steel screws. Type 304 stainless steel edging provided along vertical edges at both ends on single or grouped illuminators. Film retainers shall be stainless steel spring clips which straddle the top edge of the plastic panels (6 clips per panel). The clips are protected by a stainless steel shield that also covers the top edge of each single section plastic front. The shields butt against each other to provide a continyous appearance when sections are attached.

2.2.4.1 Double Film Illuminators (X3930)

Overall dimensions of 28" x 17" x 3-3/16".

2.2.5 4 Panel Film Illuminator (X3990)

Overall dimentions of 56" x 17" x 3-3/16".

2.2.6 Magazine Rack (F2300)

52" high x 14" wide x 5" deep. Provide solid oak magazine rack with seven magazine holding compartments. Natural finish, wall mounted.

2.2.7 Patient Chart Holder (M1620)

Wall or door mounted, baked enamel on steel. 25" high x 22" wide x 9" deep.

2.2.8 Storage Shelving (M2080)

86" high x 18" deep width as indicated on the Drawings. Stainless steel shelving unit with three adjustable shelves and four posts.

2.2.9 Shatterproof Safty Mirrors (M8235)

Constructed of distoration free, super safe shatterproof vinyl on a lightweight aluminum frame. Non-fogging. Size and configuration as indicated on the Drawings.

PART 3 EXECUTION

3.1 INSTALLATION

Install items at locations indicated. Conform to installation provisions of Section 11700, "General Requirements for Medical Equipment." Provide final utility connections and utility service to equipment.

3.2 FIELD QUALITY CONTROL

3.2.1 Tests

Test each item to ensure equipment is operational and conforms to specification requirements.

3.2.2 Inspection

Examine each item for visual defects and conformance to specifications.

-- End of Section --

SECTION TABLE OF CONTENTS

DIVISION 12 - FURNISHINGS

SECTION 12335

CASEWORK FOR MEDICAL AND DENTAL FACILITIES

10/94

PART 1 GENERAL

1.1 REFERENCES
1.2 SUBMITTALS
1.3 DELIVERY AND STORAGE

PART 2 PRODUCTS

2.1 STEEL CASEWORK
2.1.1 Medical Casework
2.2 WOOD CASEWORK
2.2.1 Medical Casework
2.3 Counter tops

PART 3 EXECUTION

3.1 INSTALLATION
3.2 CLEANING

-- End of Section Table of Contents --

SECTION 12335
CASEWORK FOR MEDICAL AND DENTAL FACILITIES
10/94

PART 1 GENERAL

1.1 REFERENCES

The publications listed below form a part of this specification to the extent referenced. The publications are referred to in the text by basic designation only.

AMERICAN SOCIETY FOR TESTING AND MATERIALS (ASTM)

ASTM C 920 (1987) Elastomeric Joint Sealants

1.2 SUBMITTALS

Government approval is required for submittals with a "GA" designation; submittals having an "FIO" designation are for information only. The following shall be submitted in accordance with Section 01300 SUBMITTAL PROCEDURES:

SD-04 Data

Casework; GA.

Manufacturer's printed data, catalog cuts, and instructions for installation and cleaning.

SD-04 Drawings

Casework; GA.

Drawings showing each type of cabinet and related item. The drawings shall clearly indicate the complete plan and elevations of the cabinets and accessories and pertinent details of construction, fabrication, and attachments.

SD-13 Certificates

Casework; GA.

Certificates attesting that the casework meets the requirements specified.

SD-14 Samples

Casework; GA.

In lieu of individual samples, complete minimum size casework may be furnished as samples. Mock-up units are not acceptable. Samples shall be of sufficient size to show color, pattern, and method of assembly.

a. Counter top and backsplash - One section, containing both.

b. Door and drawer front - One of each, with hardware mounted.

c. Melamine plastic color samples approximately 2 by 3 inch size.

d. Stain/color samples shall be approxiamately 2 by 3 inch size.

1.3 DELIVERY AND STORAGE

Casework shall be delivered to the jobsite wrapped in a protective covering. Casework shall be stored in an adequately ventilated, dry location that is free of dust, water, or other contaminates and in a manner to permit access for inspection and handling. Casework shall be handled carefully to prevent damage to the surfaces. Damaged items that cannot be restored to like-new condition shall be replaced.

PART 2 PRODUCTS

2.1 STEEL CASEWORK

JSN's C02Q0, C04E0, C05F0.

Casework shall be as scheduled on the Drawings and shall conform to MS MIL-C-20709 and the requirements specified below.

2.1.1 Medical Casework

Medical casework shall be baked enamel carbon steel, paint color as indicated.

2.2 WOOD CASEWORK

JSN's: CC020, CD040, CD100, CE090, C04H0, C04P0.

Casework shall be as scheduled on the Drawings and shall conform to MS MIL-C-20709 and the requirements specified below.

2.2.1 Medical Casework

Medical casework shall be wood core covered with laminated plastic sheets.

2.3 Counter tops

JSN's: CT030 and CT050.
Counter tops shall be chemical resistant plastic laminate covered particleboard.

PART 3 EXECUTION

3.1 INSTALLATION

Casework shall be located as indicated. The installation of the casework shall not damage the work of other trades. The casework shall be secured in place in true alignment, level, and plumb. Units shall be secured with screws through backs to cleats that have been anchored to building structure with toggle or expansion bolts. Wall-hung cabinets shall be installed to support the weight of the cabinets plus 50 pounds per lineal foot of cabinets. Fasteners shall be spaced 12 inches on center using at least three bolts in each 3 foot or 4 foot unit width. Adjoining cabinets in an assembly shall be joined together at top and bottom with inconspicuous bolts or clips. Cabinets shall be bolted to bases at cabinet corners. Metal bases shall be faced with resilient material similar to the

base provided for the space adjacent to the cabinets. Where base cabinets and counters are removable, wall anchors shall be readily accessible. Joints between the casework and wall surfaces which are not larger than the joints between casework sections shall be sealed flush with sealant conforming to ASTM C 920, Type M, Grade NS, Class 25, Use NT. Larger joints shall be closed with filler strips of the same material and finish as adjacent casework. Filler strips shall be cut to the contour of the wall surface and secured to the casework with concealed nails or screws. Width of filler strips shall not exceed 6 inches in width. Metal cabinets in rooms having terrazzo or ceramic-tile floors shall be set on concrete or masonry bases with exposed faces finished the same as other bases in the room. Height of counter tops shall be as indicated on the drawings. Where required, toe space at front of cabinets shall be provided by installing front face of cabinets 3 inches in front of face of base. Where toe space is not required, face of base and cabinets shall be flush. Bases shall have a height of approximately 4 inches. All items shall be installed as required for proper operation in accordance with the manufacturer's directions.

3.2 CLEANING

Cabinets and countertops shall be cleaned in accordance with manufacturer's instructions.

-- End of Section --

SECTION TABLE OF CONTENTS

DIVISION 12 - FURNISHINGS

SECTION 12540

WINDOW BLINDS

01/93

PART 1 GENERAL

1.1 REFERENCES
1.2 GENERAL
1.3 SUBMITTALS
1.4 DELIVERY AND STORAGE

PART 2 PRODUCTS

2.1 WINDOW BLINDS
2.1.1 Horizontal Blinds
2.1.1.1 Head Channel and Slats
2.1.1.2 Controls
2.1.1.3 Intermediate Brackets
2.2 COLORS

PART 3 EXECUTION

3.1 INSTALLATION

-- End of Section Table of Contents --

SECTION 12540

WINDOW BLINDS

01/93

PART 1 GENERAL

1.1 REFERENCES

The publications listed below form a part of this specification to the extent referenced. The publications are referred to in the text by basic designation only.

FEDERAL SPECIFICATIONS (FS)

FS AA-V-00200 (Rev B) Venetian Blinds

1.2 GENERAL

Horizontal blinds shall be provided as indicated, complete with necessary brackets, fittings, and hardware. Each window covering type utilized shall be a complete unit produced by one manufacturer. Window coverings shall be provided in accordance with paragraph WINDOW COVERING PLACEMENT SCHEDULE. Equipment shall be mounted as indicated and shall be manually operated. Windows to receive a covering shall be completely covered. The Contractor shall take measurements at the building and shall be responsible for the proper fitting and hanging of the equipment. Color shall be as indicated on the Drawings.

1.3 SUBMITTALS

Government approval is required for submittals with a "GA" designation; submittals having an "FIO" designation are for information only. The following shall be submitted in accordance with Section 01300 SUBMITTAL PROCEDURES:

SD-01 Data

Window Coverings and Hardware; FIO.

Manufacturer's data composed of catalog cuts, brochures, and product information.

SD-04 Drawings

Window Coverings and Hardware; FIO.
Drawings showing fabrication and installation details. The manufacturer's descriptive data will be acceptable, provided this literature accurately shows the items proposed to be furnished and the method of installation. Drawings shall show layout of blinds or shades, lengths and locations of track, direction of draw, and mounting details.

SD-14 Samples

Window Coverings and Hardware; FIO.

Three samples of each type and color of window covering specified. Blind slat shall be 6 inches in length for each color. Drapery track shall be 6 inches in length.

SD-19 Operations and Maintenance Manuals

Window Coverings and Hardware; FIO

Maintenance instructions for window coverings.

1.4 DELIVERY AND STORAGE

The Contractor shall be responsible for the receipt, storage, and handling of materials and supplies necessary to provide a complete installation. Window coverings shall be delivered to the project site in the manufacturer's original unopened containers. Materials shall be stored flat in a clean dry area with temperature maintained above 50 degrees F.

PART 2 PRODUCTS

2.1 WINDOW BLINDS

Each blind, including hardware, accessory items, mounting brackets and fastenings, shall be provided as a complete unit produced by one manufacturer. All parts shall be one color and match the color of the blind slat. Steel features shall be treated for corrosion resistance.

2.1.1 Horizontal Blinds

Horizontal blinds shall conform to FS AA-V-00200, Type II (1 inch slats), except as modified below. Blind units shall be capable of nominally 180 degree partial tilting operation and full-height raising. Blinds shall be inside mount.

2.1.1.1 Head Channel and Slats

Head channel shall be steel not less than 0.024 for Type II. Slats shall be aluminum, not less than 0.0080 inch thick, and of sufficient strength to prevent sag or bow in the finished blind. A sufficient amount of slats shall be provided to assure proper control, uniform spacing, and adequate overlap.

2.1.1.2 Controls

The slats shall be tilted by a transparent tilting wand, hung vertically by its own weight, and shall swivel for easy operation. The tilter control shall be of enclosed construction. All moving parts and mechanical drive shall be made of compatible materials which do not require lubrication during normal expected life. The tilter shall tilt the slats to any desired angle and hold them at that angle so that any vibration or movement of ladders and slats will not drive the tilter and change the angle of slats. A mechanism shall be included to prevent over tightening. The wand shall be of sufficient length to reach to within 5 feet of the floor.

2.1.1.3 Intermediate Brackets

Intermediate brackets shall be provided for installation of blinds over 60 inches wide or over 100 inches long and shall be installed as recommended by the manufacturer.

2.2 COLORS

As indicated on the Drawings.

PART 3 EXECUTION

3.1 INSTALLATION

Installation shall be in accordance with the approved detail drawings and manufacturer's installation instructions. Units shall be level, plumb, secure, and at proper height and location relative to window units. The Contractor shall furnish and install supplementary or miscellaneous items in total, including clips, brackets, or anchorages incidental to or necessary for a sound, secure, and complete installation. Installation shall not be initiated until completion of room painting and finishing operations. Upon completion of the installation, window coverings shall be adjusted for form and appearance, in proper operating condition, and free from damage or blemishes. Damaged units shall be repaired or replaced by the Contractor as directed by the Contracting Officer.

-- End of Section --

SECTION TABLE OF CONTENTS

DIVISION 12 - FURNISHINGS

SECTION 12690

ENTRY FLOOR MAT

PART 1 GENERAL

1.1 SUBMITTALS

PART 2 PRODUCTS

2.1 ENTRY MAT
2.1.1 Tread Rails
2.1.2 Recessed Frame

PART 3 EXECUTION

3.1 INSTALLATION

-- End of Section Table of Contents --

SECTION 12690

ENTRY FLOOR MAT

PART 1 GENERAL

1.1 SUBMITTALS

Government approval is required for submittals with a "GA" designation; submittals having an "FIO" designation are for information only. The following shall be submitted in accordance with Section 01300 SUBMITTAL PROCEDURES:

SD-02, Data

Entry Mats; FIO.

Provide manufacturer's printed data on entry mat.

SD-04, Drawings

Entry Mats and Frames; FIO.

Shop drawings showing sizes, details of construction, method of construction, method of assembling, hardware materials, colors, method of mounting, location of each item, installation of items, and other details shall be submitted for approval for all items specified herein. Materials fabricated or delivered to the job site before approval of the shop drawings shall be subject to rejection.

SD-14, Samples

Entry Mats; FIO.

A 12 x 12-inch size sample of the specified mat shall be submitted to indicate pattern, color and style of mat. A 12-inch long sample of the recessed mat frame shall be submitted indicating configuration and method of anchorage.

PART 2 PRODUCTS

2.1 ENTRY MAT

Entry mat shall be 100% Antron nylon carpet; weight 28 oz. per square yard, with 1/4 inch pile height and fusion bonded to the backing. Carpet shall be mechanically secured in aluminum tread rails. Color of carpet shall be as indicted on the Drawings.

2.1.1 Tread Rails

6063 T-5 aluminum tread rails shall be "I" shaped, 1-11/16 inches deep and 1-1/2 inches on center with a 3/16 inch spacing between rails.

2.1.2 Recessed Frame

Frame shall be heavy gauge 6063 T-5 aluminum, factory preassembled with mitered corners complete with integral concrete strap anchors, fabricated to the size indicated.

PART 3 EXECUTION

3.1 INSTALLATION

The frame recess shall be verified prior to fabricating the mat. The frame and mat shall be installed in the recess in accordance with the manufacturers instructions and shall be placed after final cleaning of finish floor.

-- End of Section --

SECTION TABLE OF CONTENTS

DIVISION 13 - SPECIAL CONSTRUCTION

SECTION 13080

SEISMIC PROTECTION FOR MECHANICAL, ELECTRICAL EQUIPMENT

07/95

PART 1 GENERAL

1.1 REFERENCES
1.2 SYSTEM DESCRIPTION
1.2.1 General
1.2.2 Mechanical/Electrical Equipment
1.2.3 Mechanical/Electrical Systems
1.2.4 Exclusion
1.2.5 Pipes and Ducts Requiring No Special Seismic Restraints
1.2.6 All Other Interior Piping, Conduit, and Ducts
1.3 SUBMITTALS

PART 2 PRODUCTS

2.1 MATERIALS AND EQUIPMENT
2.1.1 Bolts and Nuts
2.1.2 Sway Bracing
2.1.3 Flexible Couplings
2.1.3.1 Flexible Mechanical Joints
2.1.4 Lighting Fixture Supports

PART 3 EXECUTION

3.1 BRACING AND COUPLING
3.2 BUILDING DRIFT
3.3 FLEXIBLE COUPLINGS OR JOINTS
3.3.1 Building Piping
3.4 SPREADERS
3.5 ANCHOR BOLTS
3.5.1 Cast-In-Place
3.5.2 Minimum Bolt Sizes, Cast-In-Place Anchor Bolts
3.5.3 Expansion or Chemically Bonded Anchors
3.5.3.1 General Testing
3.6 RESILIENT VIBRATION ISOLATION DEVICES
3.6.1 Multidirectional Seismic Snubbers
3.7 SWAY BRACES FOR PIPING
3.7.1 Transverse Sway Bracing
3.7.2 Maximum Span for Transverse Sway Braces in Seismic Zone 4
3.7.3 Longitudinal Sway Bracing
3.7.4 Vertical Runs
3.7.5 Anchor Rods, Angles, and Bars
3.7.6 Maximum Length for Anchor Braces
3.7.7 Clamps and Hangers
3.7.8 Bolts
3.8 SWAY BRACES FOR DUCTS
3.8.1 Braced Ducts

3.8.2 Unbraced Ducts
3.9 SWAY BRACES FOR CONDUIT
3.10 EMERGENCY GAS SUPPLY CONNECTIONS
3.11 EQUIPMENT SWAY BRACING
3.11.1 Suspended Equipment
3.11.2 Floor or Pad Mounted Equipment
3.11.2.1 Shear Resistance
3.11.2.2 Overturning Resistance
3.12 MISCELLANEOUS EQUIPMENT
3.12.1 Rigidly Mounted Equipment
3.12.2 Nonrigid or Flexibly-Mounted Equipment
3.13 LIGHTING FIXTURES IN BUILDINGS
3.13.1 Pendant Fixtures
3.13.2 Recessed Fluorescent Fixtures
3.13.3 Assembly Mounted on Outlet Box
3.13.4 Surface-Mounted Fluorescent Fixtures
3.13.5 Lateral Force
3.14 SUSPENDED CEILING ASSEMBLIES
3.14.1 Design Loads
3.14.2 Installation Requirements
3.14.2.1 Vertical Support
3.14.2.2 Lateral Support
3.14.3 Lighting Fixture and Air Diffuser Supports

-- End of Section Table of Contents --

SECTION 13080

SEISMIC PROTECTION FOR MECHANICAL, ELECTRICAL EQUIPMENT
07/95

PART 1 GENERAL

1.1 REFERENCES

The publications listed below form a part of this specification to the extent referenced. The publications are referred to in the text by basic designation only.

AMERICAN NATIONAL STANDARDS INSTITUTE (ANSI)

ANSI Z21.70	(1981) Earthquake Actuated Automatic Gas Shutoff Systems

AMERICAN SOCIETY FOR TESTING AND MATERIALS (ASTM)

ASTM A 36	(1994a) Carbon Structural Steel
ASTM A 307	(1994) Carbon Steel Bolts and Studs, 60,000 PSI Tensile Strength
ASTM A 325	(1994) Structural Bolts, Steel, Heat Treated, 120/105 ksi Minimum Tensile Strength
ASTM A 446	(1993) Steel Sheet, Zinc-Coated (Galvanized) by the Hot-Dip Process for Storm Sewer and Drainage Pipe
ASTM A 500	(1993) Cold-Formed Welded and Seamless Carbon Steel Structural Tubing in Rounds and Shapes
ASTM A 501	(1993) Hot-Formed Welded and Seamless Carbon Steel Structural Tubing
ASTM A 576	(1990b) Steel Bars, Carbon, Hot-Wrought, Special Quality
ASTM A 603	(1988) Zinc-Coated Steel Structural Wire Rope
ASTM E 488	(1990) Strength of Anchors in Concrete and Masonry Elements
ASTM E 580	(1991) Application of Ceiling Suspension Systems for Acoustical Tile and Lay-In Panels in Areas Requiring Seismic Restraint

AMERICAN SOCIETY OF MECHANICAL ENGINEERS (ASME)

ASME B18.2.1	(1981; Supple 1991; R 1992) Square and Hex

	Bolts and Screws (Inch Series)
ASME B18.2.2	(1987; R 1993) Square and Hex Nuts (Inch Series)

INTERNATIONAL CONFERENCE OF BUILDING OFFICIALS (ICBO)

ICBO-01	(1994) Uniform Building Code

SHEET METAL & AIR CONDITIONING CONTRACTORS' NATIONAL ASSOCIATION (SMACNA)

SMACNA-12	(1991; Appx E, 1993) Seismic Restraint Manual Guidelines for Mechanical Systems

UNDERWRITERS LABORATORIES (UL)

UL 1570	(1988; Rev thru Mar 1995) Fluorescent Lighting Fixtures
UL 1571	(1991; Rev thru Mar 1995) Incandescent Lighting Fixtures

1.2 SYSTEM DESCRIPTION

1.2.1 General

The requirements for seismic protection measures described in this section shall be applied to mechanical/electrical equipment and systems specified herein. Seismic protection requirements shall be in accordance with ICBO-01 using an importance factor of 1.25 and shall be provided in addition to any other requirements called for in other sections of these specifications. This facility shall be designed as being in seismic Zone III; no other zone values shall be used to establish bracing requirements. Lateral support against earthquake induced forces shall be accomplished by positive attachments without consideration of friction resulting from gravity loads.

1.2.2 Mechanical/Electrical Equipment

Mechanical/electrical equipment shall include the following items to the extent required on the drawings or in other sections of these specifications:

Boilers	Storage Tank for Water
Water Heaters	Water and Gas Piping
Expansion Air Separator Tanks	Cable Trays
Heat Exchangers	Water Chiller Units
Control Panels	Air and Refrigerant Compressors
Air Handling Units	Switchgear
Pumps with Motors	Storage Racks
Light Fixtures	Ducts
Motor Control Centers	Transformers
Switchboards (Floor Mounted)	Air Distribution System Terminal Units
Suspended Ceiling Assemblies	Silencers
Unit Heaters	Fan Coil Units
Exhaust and Return Fans	Ventilation Fan

1.2.3 Mechanical/Electrical Systems

The following mechanical and electrical systems shall be installed as required on the drawings and other sections of these specifications and shall be seismically protected in accordance with this specification:

All Piping Inside the Building in Accordance With This Specification
Chilled Water Distribution Systems Outside of Buildings
Gas Distribution Systems
All Water Supply Systems
Storm and Sanitary Sewer Systems

1.2.4 Exclusion

Seismic protection of piping for fire protection systems shall be installed as specified in Sections 15330 WET PIPE SPRINKLER SYSTEM, FIRE PROTECTION.

1.2.5 Pipes and Ducts Requiring No Special Seismic Restraints

Seismic restraints may be omitted from the following installations:

a. Gas piping less than 1 inch inside diameter.

b. Piping in boiler and mechanical equipment rooms less than 1-1/4 inches inside diameter.

c. All other piping less than 1-1/2 inches inside diameter.

d. Electrical conduit less than 2-1/2 inches inside diameter.

e. Rectangular air handling ducts less than 4 square feet in cross sectional area.

f. Round air handling ducts less than 18 inches in diameter.

g. Piping suspended by individual hangers 12 inches or less in length from the top of pipe to the bottom of the supporting structural member where the hanger is attached, except as noted below.

h. Ducts suspended by hangers 12 inches or less in length from the top of the duct to the bottom of the supporting structural member, except as noted below.

In exemptions g. and h. all hangers shall meet the length requirements. If the length requirement is exceeded by one hanger in the run, the entire run shall be braced.

1.2.6 All Other Interior Piping, Conduit, and Ducts

Interior piping, conduit, and ducts not covered by paragraphs exclusion or pipes and ducts requiring no special Seismic Restraints shall be seismically protected in accordance with the provisions herein.

1.3 SUBMITTALS

Government approval is required for submittals with a "GA" designation; submittals having an "FIO" designation are for information only. The following shall be submitted in accordance with Section 01300 SUBMITTAL

PROCEDURES:

SD-01 Data

Bracing and Coupling; GA. Lighting Fixtures in Buildings; GA. Miscellaneous Equipment; GA.

Copies of the design calculations with the detail drawings. Calculations shall be stamped by a registered engineer and shall verify the capability of structural members to which bracing is attached for carrying the load from the brace.

SD-04 Drawings

Bracing and Coupling; GA. Flexible Couplings or Joints; GA. Resilient Vibration Isolation Devices; GA. Lighting Fixtures in Buildings; GA. Miscellaneous Equipment; GA.

Detail drawings along with catalog cuts, templates, and erection and installation details, as appropriate, for the items listed. Submittals shall be complete in detail; shall indicate thickness, type, grade, class of metal, and dimensions; and shall show construction details, reinforcement, anchorage, and installation with relation to the building construction.

PART 2 PRODUCTS

2.1 MATERIALS AND EQUIPMENT

Materials and equipment shall conform to the requirements specified below:

2.1.1 Bolts and Nuts

Squarehead and hexhead bolts, and heavy hexagon nuts, ASME B18.2.1, ASME B18.2.2, and ASTM A 307 or ASTM A 576. Bolts and nuts used underground and/or exposed to weather shall be galvanized in accordance with ASTM A 325.

2.1.2 Sway Bracing

Material used for members listed in this section and on the drawings, shall be structural steel conforming with the following:

a. Plates, rods, and rolled shapes, ASTM A 36.

b. Wire rope, ASTM A 603.

c. Tubes, ASTM A 501.

d. Pipes, ASTM A 500.

e. Light gauge angles, less than 1/4 inch thickness, ASTM A 446.

2.1.3 Flexible Couplings

Flexible couplings shall have same pressure and temperature ratings as adjoining pipe specified in Section 15569.

2.1.3.1 Flexible Mechanical Joints

a. Mechanical couplings for steel or cast iron pipe shall be of the sleeve type and shall provide a tight flexible joint under all reasonable conditions, such as pipe movement caused by expansion, contraction, slight settling or shifting of the ground, minor variations in trench gradients, and traffic vibrations. Where permitted in other sections of these specifications, joints utilizing split-half couplings with grooved or shouldered pipe ends may be used.

b. Sleeve-type couplings shall be used for joining plain-end pipe sections. The coupling shall consist of one steel middle ring, two steel followers, two gaskets, and necessary steel bolts and nuts to compress the gaskets. Underground bolts shall be high-strength type as specified above.

2.1.4 Lighting Fixture Supports

Fixture supports shall be malleable iron. Lighting fixtures and supports shall conform to UL 1570 or UL 1571 as applicable.

PART 3 EXECUTION

3.1 BRACING AND COUPLING

Bracing and coupling shall conform to the arrangements shown. Provisions of this paragraph apply to all piping within a 5 foot line around outside of building unless buried in the ground. Piping grouped for support on trapeze-type hangers shall be braced at the same intervals as determined by the smallest diameter pipe of the group. No trapeze-type hanger shall be secured with less than two 1/2 inch bolts. Bracing rigidly attached to pipe flanges, or similar, shall not be used where it would interfere with thermal expansion of piping.

3.2 BUILDING DRIFT

Sway braces for a run shall not be attached to two dissimilar structural elements of a building that may respond differentially during an earthquake unless a flexible joint is provided. Joints capable of accommodating seismic displacements shall be provided where pipes pass through a building seismic or expansion joint, or where rigidly supported pipes connect to equipment with vibration isolators. For threaded piping, swing joints shall be provided. For piping with manufactured ball joints the seismic drift shall be 0.015 feet per foot of height above the base where the seismic separation occurs; this drift value shall be used in place of the expansion given in the manufacturer's selection table.

3.3 FLEXIBLE COUPLINGS OR JOINTS

3.3.1 Building Piping

Flexible couplings or joints in building piping shall be provided at bottom of all pipe risers larger than 3-1/2 inches in diameter. Flexible couplings or joints shall be braced laterally without interfering with the action of the flexible coupling or joint. Cast iron waste and vent piping need only comply with these provisions when caulked joints are used. Flexible bell and spigot pipe joints using rubber gaskets or no-hub fittings may be used at each branch adjacent to tees and elbows for underground waste piping inside of building to comply with these requirements.

3.4 SPREADERS

Spreaders shall be provided between adjacent piping runs to prevent contact during seismic activity whenever pipe or insulated pipe surfaces are less than 4 inches apart. Spreaders shall be applied at same interval as sway braces at an equal distance between the sway braces. If rack type hangers are used where the pipes are restrained from contact by mounting to the rack, spreaders are not required for pipes mounted in the rack. Spreaders shall be applied to surface of bare pipe and over insulation on insulated pipes utilizing high-density inserts and pipe protection shields in accordance with the requirements of Section 15250 THERMAL INSULATION FOR MECHANICAL SYSTEMS.

3.5 ANCHOR BOLTS

3.5.1 Cast-In-Place

Floor or pad mounted equipment shall use cast-in-place anchor bolts, except as specified below. Two nuts shall be provided on each bolt. Anchor bolts shall conform to the following tabulation for the various equipment weights and specified seismic zone or the manufacturer's installation recommendations, whichever is the most stringent, unless otherwise shown on the drawings. Anchor bolts that exceed the normal depth of equipment foundation piers or pads shall either extend into concrete floor or the foundation shall be increased in depth to accommodate bolt lengths.

3.5.2 Minimum Bolt Sizes, Cast-In-Place Anchor Bolts

Maximum Equipment Weight (Pounds)	Minimum Bolt Sizes (Inches)* Zone 3
500	1/2
1,000	1/2
5,000	1/2
10,000	1/2
20,000	1/2
30,000	1/2
50,000	5/8
100,000	**

*Based on four bolts per item, a minimum embedment of 12 bolt diameters, a minimum bolt spacing of 16 bolt diameters and a minimum edge distance of 12 bolt diameters. Equivalent total cross-sectional area shall be used when more than four bolts per item are provided. Anchor bolts shall conform to ASTM A 307. Anchor bolts shall have an embedded straight length equal to at least 12 times nominal diameter of the bolt.

**Equipment weighing more than 50,000 lb in Zones 3 and 4 shall have at least six bolts per item.

3.5.3 Expansion or Chemically Bonded Anchors

Expansion or chemically bonded anchors shall not be used unless test data in accordance with ASTM E 488 has been provided to verify the adequacy of the specific anchor and application. The expansion anchor size shall be not less than that required in paragraph Minimum Bolt Sizes, Cast-In-Place Anchor Bolts. Expansion and chemically bonded anchors shall be installed in accordance with the manufacturer's recommendations. The allowable forces shall be adjusted for the spacing between anchor bolts and the distance between the anchor bolt and the nearest edge, as specified by the manufacturer.

3.5.3.1 General Testing

Expansion and chemically bonded anchors shall be tested in place after installation. The tests shall occur not more than 24 hours after installation of the anchor and shall be conducted by an independent testing agency; testing shall be performed on random anchor bolts as described below.

3.6 RESILIENT VIBRATION ISOLATION DEVICES

Selection of anchor bolts for vibration isolation devices and/or snubbers for equipment base and foundations shall follow the same procedure as in paragraph ANCHOR BOLTS except that an equipment weight equal to five times the actual equipment weight shall be used.

3.6.1 Multidirectional Seismic Snubbers

Multidirectional seismic snubbers employing elastomeric pads shall be installed on all floor- or slab-mounted equipment. These snubbers shall provide 0.25 inches free vertical and horizontal movement from the static deflection point. Snubber medium shall consist of multiple pads of cotton duct and neoprene or other suitable materials arranged around a flanged steel trunnion so both horizontal and vertical forces are resisted by the snubber medium.

3.7 SWAY BRACES FOR PIPING

Sway braces shall be provided to prevent movement of the pipes under seismic loading. Braces shall be provided in both the longitudinal and transverse directions, relative to the axis of the pipe. The bracing shall not interfere with thermal expansion requirements for the pipes as described in other sections of these specifications.

3.7.1 Transverse Sway Bracing

Transverse sway bracing for steel and copper pipe shall be provided at intervals not to exceed those given in the tabulation below as modified for each seismic zone. All runs shall have a minimum of two transverse braces. Transverse sway bracing for pipes of materials other than steel and copper shall be provided at intervals not to exceed the hanger spacing as specified in Section 15400 PLUMBING, GENERAL PURPOSE.

3.7.2 Maximum Span for Transverse Sway Braces in Seismic Zone 4

Pipe Diameter	Std. Wgt. Steel Pipe - 40S	Ex. Strong Steel Pipe - 80S	Copper Tube Type L

(in.)	*L(ft.)	**F(lbs.)	*L(ft.)	**F(lbs.)	*L(ft.)	**F(lbs.)
1	22	70	22	80	11	17
1-1/2	25	140	26	180	12	35
2	29	220	30	290	14	70
2-1/2	32	380	33	460	15	110
3	34	550	35	710	17	150
3-1/2	36	730	38	930	18	220
4	39	960	40	1,200	19	300
5	41	1,440	44	1,900	20	470
6	45	2,120	46	2,750	22	730
8	49	3,740	54	5,150	26	1,550
10	54	6,080	59	7,670	28	2,630
12	58	8,560	61	10,350	31	3,950

*L = Maximum span between lateral supports multiplied by 1.1 for Zone 3, 1.25 for Zone 2A, 1.2 for Zone 2B, or 1.35 for Zone 1.

**F = Horizontal force on the brace multiplied by 0.8 for Zone 3, 0.5 for Zone 2A, 0.6 for Zone 2B, or 0.3 for Zone 1.

NOTE: Bracing shall consist of at least one vertical angle 2 x 2 x 16 gauge and one diagonal angle of the same size.

3.7.3 Longitudinal Sway Bracing

Longitudinal sway bracing shall be provided at 40 foot intervals except when the location of sway braces is shown on the drawings for the particular piping system. All runs shall have one longitudinal brace minimum. Sway braces shall be constructed in accordance with the drawings. Branch lines, walls, or floors shall not be used as sway braces.

3.7.4 Vertical Runs

Vertical runs of piping shall be braced at not more than 10 foot vertical intervals. For tubing, bracing shall be provided at no more than 4 foot spacing. Vertical braces shall be above the center of gravity of the span being braced. All sway braces shall be constructed in accordance with the drawings. Branch lines, walls, or floors shall not be used as sway braces.

3.7.5 Anchor Rods, Angles, and Bars

Anchor rods, angles, and bars shall be bolted to either pipe clamps or pipe flanges at one end and cast-in-place concrete or masonry insert or clip angles bolted to the steel structure on the other end. Rods shall be solid metal or pipe as specified below. Anchor rods, angles, and bars shall not exceed lengths given in the tabulation below.

3.7.6 Maximum Length for Anchor Braces

Type	Size (Inches)	Maximum length* (Feet/Inches)	Allowable Loads* (kips)

Angles	1-1/2 x 1-1/2 x 1/4	4-10	5.7
	2 x 2 x 1/4	6-6	7.8
	2-1/2 x 1-1/2 x 1/4	8-0	9.8
	3 x 2-1/2 x 1/4	8-10	10.8
	3 x 3 x 1/4	9-10	11.9
Rods	3/4	3-1	3.7
	7/8	3-8	5.0
Flat Bars	1-1/2 x 1/4	1-2	3.1
	2 x 1/4	1-2	4.1
	2 x 3/8	1-9	6.2
Pipes (40S)	1	7-0	4.1
	1-1/4	9-0	5.5
	1-1/2	10-4	6.6
	2	13-1	8.9

*Based on the slenderness ratio of l/r = 200 and ASTM A 36 steel, where l is the length of the brace and r is the least radius of gyration of the brace.

3.7.7 Clamps and Hangers

Clamps or hangers on uninsulated pipes shall be applied directly to pipe. Insulated piping shall have clamps or hangers applied over insulation in accordance with Section 15250 THERMAL INSULATION FOR MECHANICAL SYSTEMS.

3.7.8 Bolts

Bolts used for attachment of anchors to pipe and structure shall be not less than 1/2 inch diameter.

3.8 SWAY BRACES FOR DUCTS

3.8.1 Braced Ducts

Bracing details and spacing for rectangular and round ducts shall be in accordance with SMACNA-12, including Appendix E, using Seismic Hazard Level B.

3.8.2 Unbraced Ducts

Hangers for unbraced ducts shall be positively attached to the duct within 2 inches of the top of the duct with a minimum of two #10 sheet metal screws. Unbraced ducts shall be installed with a 6 inch minimum clearance to vertical ceiling hanger wires.

3.9 SWAY BRACES FOR CONDUIT

Conduit shall be braced as for an equivalent weight pipe.

3.10 EMERGENCY GAS SUPPLY CONNECTIONS

Facilities which are to be connected to natural gas distribution systems shall be provided with an aboveground locked, valved and capped emergency gas supply connection. Provisions shall be made for attachment of a portable, commercial-sized gas cylinder system to this connection.

Connection shall be located within 12 inches of the exterior wall and clearly marked with an appropriate metal sign mounted on wall above. An automatic device to safely interrupt the flow of gas to the building in case of an earthquake shall be installed in accordance with ANSI Z21.70, in addition to manual shut-off valves as required by section 02685 GAS DISTRIBUTION SYSTEM.

3.11 EQUIPMENT SWAY BRACING

3.11.1 Suspended Equipment

Equipment sway bracing shall be provided for items supported from overhead floor or roof structures. Braces shall consist of angles, rods, wire rope, bars, or pipes arranged as shown and secured at both ends with not less than 1/2 inch bolts. Braces shall conform to paragraph Maximum Length for Anchor Braces. Sufficient braces shall be provided for equipment to resist a horizontal force equal to 1.13 times the weight of equipment without exceeding safe working stress of bracing components. Details of equipment bracing shall be submitted for approval. In lieu of bracing with vertical supports, these items may be supported with hangers inclined at 45 degrees directed up and radially away from equipment and oriented symmetrically in 90-degree intervals on the horizontal plane, bisecting the angles of each corner of the equipment, provided that supporting members are properly sized to support operating weight of equipment when hangers are inclined at a 45-degree angle.

3.11.2 Floor or Pad Mounted Equipment

3.11.2.1 Shear Resistance

Floor mounted equipment shall be bolted to the floor. Requirements for the number and installation of bolts to resist shear forces shall be in accordance with paragraph ANCHOR BOLTS.

3.11.2.2 Overturning Resistance

The ratio of the height of the equipment (measured from the base to the center of gravity of the equipment) to the minimum distance between anchor bolts shall be used to determine if overturning forces need to be considered in the sizing of anchor bolts. If this ratio is greater than 2.22 the bolt values in paragraph Minimum Bolt Sizes, Cast-In-Place Anchor Bolts shall not be used and calculations shall be provided to verify the adequacy of the anchor bolts for combined shear and overturning.

3.12 MISCELLANEOUS EQUIPMENT

3.12.1 Rigidly Mounted Equipment

The following specific items of equipment to be furnished under this contract shall be constructed and assembled to withstand a horizontal lateral force of 0.23 times the operating weight of the equipment, at vertical center of gravity of the equipment without causing permanent deformation, dislocations, separation of components, or other damage, which would render the equipment inoperative for significant periods of time following an earthquake.

Rigidly Mounted Equipment

Boilers
Chillers
Air-Handling Units
Transformers
Free Standing Electric Motors
Surge Tanks

3.12.2 Nonrigid or Flexibly-Mounted Equipment

The following specific items of equipment to be furnished shall be constructed and assembled to resist a horizontal lateral force of .23 times the operating weight of the equipment at the vertical center of gravity of the equipment.

3.13 LIGHTING FIXTURES IN BUILDINGS

Lighting fixtures and supports shall conform to the following:

3.13.1 Pendant Fixtures

Loop and hook or swivel hanger assemblies for pendant fixtures shall be fitted with a restraining device to hold the stem in the support position during earthquake motions. Pendant-supported fluorescent fixtures shall also be provided with a flexible hanger device at the attachment to the fixture channel to preclude breaking of the support. The motion of swivels or hinged joints shall not cause sharp bends in conductors or damage to insulation.

3.13.2 Recessed Fluorescent Fixtures

Recessed fluorescent individual or continuous-row mounted fixtures shall be supported by a seismic-resistant suspended ceiling support system and shall be fastened thereto at each corner of the fixture with bolts or approved clips; or shall be provided with fixture support wires attached to the building structural members using two wires for individual fixtures, attached to opposite corners, and one wire per unit of continuous row mounted fixtures. Each wire support shall be capable of supporting four times the weight of the fixture. Recessed lighting fixtures not over 56 pounds in weight and suspended or pendant-hung fixtures not over 20 pounds in weight may be supported by and attached directly to the ceiling system runners by a positive attachment such as screws or bolts, number and size as required by design seismic zone. Fixture accessories, including louvers, diffusers, and lenses shall have lock or screw attachments.

3.13.3 Assembly Mounted on Outlet Box

A supporting assembly that is intended to be mounted on an outlet box shall be designed to accommodate mounting features on 4 inch boxes, 3 inch plaster rings, and fixture studs.

3.13.4 Surface-Mounted Fluorescent Fixtures

Surface-mounted fluorescent individual or continuous-row fixtures shall be attached to a seismic-resistant ceiling support system. Fixture support devices for attaching to suspended ceilings shall be a locking-type scissor clamp or a full loop band that will securely attach to the ceiling support. Fixtures attached to underside of a structural slab shall be properly anchored to the slab at each corner of the fixture.

3.13.5 Lateral Force

Light fixture bracing shall be designed to resist a lateral force of 1.13 times the fixture weight.

3.14 SUSPENDED CEILING ASSEMBLIES

The structural members of ceiling support systems, used primarily to support acoustical tile panels or acoustical panel lay-in tiles, with or without lighting fixtures, ceiling-mounted air terminals, and ceiling-mounted services, shall conform to the following:

3.14.1 Design Loads

The main runners and cross-runners and their splices and intersection connections shall be designed for two times the design load or ultimate axial tension or compression (minimum 120 pounds.) The connections at the splices and intersections shall be of a mechanical interlocking type that cannot easily be disengaged. Ceiling structural systems shall be designed to withstand required vertical load as well as a lateral force of 23 percent of the ceiling weight. The ceiling weight shall include all lighting fixtures and other equipment that are laterally supported by the ceiling and shall be not less than 4.0 psf. Exception: Ceiling areas of 144 square feet or less surrounded by walls that connect directly to the structure above will be exempt from the lateral-load standards of this specification.

3.14.2 Installation Requirements

Installation requirements shall be in accordance with ASTM E 580 except as follows:

3.14.2.1 Vertical Support

Hanger wires supporting a maximum tributary ceiling area of 16 square feet shall be a minimum of 10 gauge in diameter. The size of wires supporting a tributary ceiling area greater than 16 square feet shall be substantiated by design calculations. Hanger attachment devices used in ceiling systems not exceeding 4 psf shall be capable of supporting a minimum allowable load of 300 pounds. Hanger attachment devices used in ceiling systems exceeding 4 psf shall be capable of supporting the design load and shall be substantiated by design calculations. If hangers must be splayed more than one horizontal to six vertical, the resulting horizontal force shall be offset by bracing or counter-splaying, and substantiated by design calculations.

3.14.2.2 Lateral Support

In lieu of the design criteria stated above, where ceiling loads do not exceed 4 psf, lateral support for the ceiling system may be provided by four galvanized wires of minimum No. 12 gauge, as indicated in ASTM E 580, paragraph 4.4.6.

3.14.3 Lighting Fixture and Air Diffuser Supports

Lighting fixture and air diffuser supports shall be designed and installed to meet the requirements of equipment supports in the preceding paragraphs of this specification with the following exceptions:

a. Recessed lighting fixtures not over 56 pounds in weight and suspended and pendent-hung fixtures not over 20 pounds in weight may be supported and attached directly to the ceiling system runners by a positive attachment such as screws or bolts.

b. Air diffusers that weigh not more than 20 pounds and that receive no tributary loading from ductwork may be positively attached to and supported by the ceiling runners.

-- End of Section --

SECTION TABLE OF CONTENTS

DIVISION 15 - MECHANICAL

SECTION 15250

THERMAL INSULATION FOR MECHANICAL SYSTEMS

07/89

PART 1 GENERAL

1.1 REFERENCES
1.2 SYSTEM DESCRIPTION
1.3 GENERAL QUALITY CONTROL
1.3.1 Standard Products
1.3.2 Installer's Qualifications
1.3.3 Surface Burning Characteristics
1.3.4 Identification of Materials
1.4 SUBMITTALS
1.5 STORAGE

PART 2 PRODUCTS

2.1 GENERAL MATERIALS
2.1.1 Adhesives
2.1.1.1 Mineral Fiber Insulation Cement
2.1.1.2 Contact Adhesive
2.1.1.3 Lagging Adhesive
2.1.2 Contact Adhesive
2.1.3 Caulking
2.1.4 Corner Angles
2.1.5 Finishing Cement
2.1.6 Glass Tape
2.1.6.1 Plain Weave, Untreated
2.1.6.2 Knitted, Untreated
2.1.6.3 Distortion Requirements
2.1.6.4 Open-Weave Type
2.1.7 Glass Cloth
2.1.8 Staples
2.1.9 Jackets
2.1.10 Vapor Barrier Coating
2.1.11 Wire
2.2 PIPE INSULATION MATERIALS
2.2.1 Aboveground Cold Pipeline
2.2.1.1 Flexible Cellular Insulation
2.2.2 Aboveground Hot Pipeline
2.2.2.1 Mineral Fiber
2.2.2.2 Cellular Glass
2.2.3 Belowground Pipeline Insulation
2.3 DUCT INSULATION MATERIALS
2.3.1 Rigid Mineral Fiber
2.3.2 Flexible Mineral Fiber
2.3.3 Cellular Glass
2.4 EQUIPMENT INSULATION MATERIALS
2.4.1 Cold Equipment Insulation

2.4.1.1 Rigid Mineral Fiber
2.4.1.2 Flexible Mineral Fiber
2.4.1.3 Cellular Glass
2.4.1.4 Flexible Cellular Insulation
2.4.2 Hot Equipment Insulation
2.4.2.1 Rigid Mineral Fiber
2.4.2.2 Flexible Mineral Fiber
2.4.2.3 Cellular Glass

PART 3 EXECUTION

3.1 APPLICATION - GENERAL
3.1.1 Installation
3.1.2 Firestopping
3.1.3 Painting and Finishing
3.1.4 Flexible Cellular Insulation
3.1.5 Welding
3.2 PIPE INSULATION INSTALLATION
3.2.1 Pipe Insulation
3.2.1.1 General
3.2.1.2 Pipes Passing Through Sleeves
3.2.1.3 Pipes Passing Through Hangers
3.2.2 Aboveground Cold Pipelines
3.2.3 Insulation Thickness
3.2.3.1 Jacket for Fibrous and Cellular Glass Insulated Pipe
3.2.3.2 Insulation for Straight Runs (Fibrous and Cellular Glass)
3.2.3.3 Insulation for Fittings and Accessories
3.2.3.4 Optional PVC Fitting Covers
3.2.4 Aboveground Hot Pipelines
3.2.4.1 Insulation Thickness
3.2.4.2 Jacket for Insulated Pipe
3.2.4.3 Insulation for Straight Runs
3.2.4.4 Insulation for Fittings and Accessories
3.2.5 Piping Exposed to Weather
3.2.5.1 Aluminum Jacket
3.2.5.2 Insulation for Fittings
3.2.5.3 PVC Lagging
3.3 DUCT INSULATION INSTALLATION
3.3.1 Insulation and Vapor Barrier for Cold Air Duct
3.3.1.1 Installation on Duct
3.3.2 Ducts Handling Air for Dual Purpose
3.3.3 Duct Test Holes
3.4 EQUIPMENT INSULATION INSTALLATION
3.4.1 General
3.4.2 Insulation for Cold Equipment
3.4.2.1 Insulation Type
3.4.2.2 Pump Insulation
3.4.2.3 Other Equipment
3.4.2.4 Vapor Barrier
3.4.3 Insulation for Hot Equipment
3.4.3.1 Insulation
3.4.3.2 Insulation of Pumps
3.4.3.3 Other Equipment
3.4.4 Equipment Handling Dual Temperature Media
3.4.5 Equipment Exposed to Weather
3.4.5.1 Installation
3.4.5.2 Optional Panels

-- End of Section Table of Contents --

SECTION 15250

THERMAL INSULATION FOR MECHANICAL SYSTEMS
07/89

PART 1 GENERAL

1.1 REFERENCES

The publications listed below form a part of this specification to the extent referenced. The publications are referred to in the text by basic designation only.

AMERICAN SOCIETY FOR TESTING AND MATERIALS (ASTM)

ASTM A 580	(1993) Stainless and Heat Resisting Steel Wire
ASTM B 209	(1992a) Aluminum and Aluminum-Alloy Sheet and Plate
ASTM C 195	(1990) Mineral Thermal Insulating and Cement
ASTM C 449	(1988) Mineral Fiber Hydraulic-Setting Thermal Insulating and Finishing Cement
ASTM C 534	(1994) Preformed Flexible Elastomeric Cellular Thermal Insulation in Sheet and Tubular Form
ASTM C 547	(1977; R 1993) Mineral Fiber Preformed Pipe Insulation
ASTM C 552	(1991) Cellular Glass Thermal Insulation
ASTM C 553	(1992) Mineral Fiber Blanket Thermal Insulation for Commercial and Industrial Applications
ASTM C 612	(1993) Mineral Fiber Block and Board Thermal Insulation
ASTM C 795	(1992) Thermal Insulation for Use in Contact With Austenitic Stainless Steel
ASTM C 647	(1989a) Properties and Tests of Mastics and Coating Finishes for Thermal Insulation
ASTM C 920	(1987) Elastomeric Joint Sealants
ASTM C 921	(1989) Determining the Properties of Jacketing Materials for Thermal Insulation
ASTM D 3278	(1989) Test Methods for Flash Point of Liquids by Setaflash Closed-Cup Apparatus

ASTM E 84	(1994) Surface Burning Characteristics of Building Materials
ASTM E 96	(1994) Water Vapor Transmission of Materials

FEDERAL SPECIFICATIONS (FS)

FS L-P-535	(Rev E; Notice 2) Plastic Sheet (Sheeting): Plastic Strip: Poly(Vinyl Chloride) and Poly(Vinyl Chloride-Vinyl Acetate), Rigid

MANUFACTURERS STANDARDIZATION SOCIETY OF THE VALVE AND FITTINGS INDUSTRY (MSS)

MSS SP-69	(1991) Pipe Hangers and Supports - Selection and Application

MIDWEST INSULATION CONTRACTORS ASSOCIATION (MICA)

MICA-01	(1993) National Commercial & Industrial Insulation Standards

NATIONAL FIRE PROTECTION ASSOCIATION (NFPA)

NFPA 90A	(1993) Installation of Air Conditioning and Ventilating Systems

UNDERWRITERS LABORATORIES (UL)

UL 723	(1993; Rev Apr 1994) Test for Surface Burning Characteristics of Building Materials

1.2 SYSTEM DESCRIPTION

Field-applied insulation and accessories on mechanical systems shall be as specified herein; factory-applied insulation is specified under the piping, duct or equipment to be insulated. Heat distribution systems and chilled water systems outside of buildings are specified to be insulated in Section 02698 PREFABRICATED UNDERGROUND HEATING/COOLING DISTRIBUTION SYSTEM. Field applied insulation materials required for use on Government-furnished items as listed in the SPECIAL CLAUSES shall be furnished and installed by the Contractor.

1.3 GENERAL QUALITY CONTROL

1.3.1 Standard Products

Materials shall be the standard products of manufacturers regularly engaged in the manufacture of such products and shall essentially duplicate items that have been in satisfactory use for at least 2 years prior to bid opening.

1.3.2 Installer's Qualifications

Qualified installers shall have successfully completed three or more similar type jobs within the last 5 years.

1.3.3 Surface Burning Characteristics

Unless otherwise specified, insulation not covered with a jacket shall have a flame spread rating no higher than 75 and a smoke developed rating no higher than 150. The outside surface of insulation systems which are located in air plenums, in ceiling spaces, and in attic spaces shall have a flame spread rating no higher than 25 and a smoke developed rating no higher than 50. Insulation materials located exterior to the building perimeter are not required to be fire-rated. Flame spread and smoke developed ratings shall be determined by ASTM E 84. Insulation shall be tested in the same density and installed thickness as the material that shall be used in the actual construction. Jackets shall comply with the flame spread and smoke developed ratings required by ASTM C 921.

1.3.4 Identification of Materials

Packages or standard containers of insulation, jacket material, cements, adhesives, and coatings delivered for use, and samples required for approval shall have manufacturer's stamp or label attached giving the name of the manufacturer and brand, and a description of the material.

1.4 SUBMITTALS

Government approval is required for submittals with a "GA" designation; submittals having an "FIO" designation are for information only. The following shall be submitted in accordance with Section 01300 SUBMITTAL PROCEDURES:

SD-01 Data

Thermal Insulation Materials; GA.

A complete list of materials, including manufacturer's descriptive and technical literature, performance data, catalog cuts, and installation instructions. Materials furnished under this section of the specification shall be submitted at one time. A schedule indicating the product number, k-value, thickness and furnished accessories for each mechanical system requiring insulation shall be included.

SD-14 Samples

Thermal Insulation Materials; FIO.

A display of insulated sections as specified in this section, after approval of materials and prior to insulating any piping or ductwork. Each material used shall be identified, by indicating on an attached sheet the specification requirement for the material and the material by each manufacturer intended to meet the requirement. Display sample sections will be inspected at the jobsite by the Contracting Officer. Approved display sample sections shall remain on display at the jobsite during the construction period. Upon completion of construction, the display sample sections will be returned to the Contractor.

Pipe Insulation Display Sections: Display sample sections shall include as a minimum an elbow or tee, a valve, dielectric unions and flanges, a hanger

with protection shield and insulation insert, or dowel as required, at support point, method of fastening and sealing insulation at longitudinal lap, circumferential lap, butt joints at fittings and on pipe runs, and terminating points for each type of pipe insulation used on the job, and for hot pipelines and cold pipelines, both interior and exterior, even when the same type of insulation is used for these services.

Duct Insulation Display Sections: Display sample sections for rigid and flexible duct insulation used on the job. A display section for duct insulation exposed to weather.

SD-18 Records

Thermal Insulation Materials; GA.

Three copies of a booklet indicating the types of insulation by referencing MICA-01, at the jobsite. After approval of materials and prior to insulating any equipment, a booklet shall be prepared and submitted for approval which contains marked-up MICA-01 plates or detail drawings showing the insulation material and insulating system for each type of equipment which is required to be insulated per paragraph EQUIPMENT INSULATION INSTALLATION. The MICA plates shall be marked-up showing the materials to be installed in accordance with the requirements of this specification for the specific insulation application. The Contractor shall submit all MICA Plates required to show the entire insulating system, including Plates required to show insulation penetrations, vessel bottom and top heads, legs, and skirt insulation as applicable. If the Contractor elects to submit detailed drawings instead of marked-up MICA Plates, the detail drawings shall show cut-away, section views, and details indicating each component of the insulation system and showing provisions for insulating jacketing, and sealing portions of the equipment. The drawings shall be labeled with a description of each material type with materials and insulating systems, in accordance with this specification. Each material and insulating system that is used shall be identified by indicating the specification requirement for the material, and the material by each manufacturer that is intended to meet the requirement. Three copies of the booklet shall be submitted at the jobsite to the Contracting Officer. One copy of the approved booklet shall remain with the display sample and two copies shall be provided for Government use.

1.5 STORAGE

Materials shall be delivered in the manufacturer's unopened containers. Materials delivered and placed in storage shall be provided with protection from weather, humidity, dirt, dust and other contaminants by the Contractor. Insulation material and supplies that become dirty, dusty, wet, or otherwise contaminated may be rejected by the Contracting Officer.

PART 2 PRODUCTS

2.1 GENERAL MATERIALS

Materials shall be compatible and shall not contribute to corrosion, soften, or otherwise attack surfaces to which applied in either the wet or dry state. Materials to be used on stainless steel surfaces shall meet ASTM C 795 requirements. Materials shall be asbestos free and conform to the following:

2.1.1 Adhesives

2.1.1.1 Mineral Fiber Insulation Cement

Cement shall be in accordance with ASTM C 195.

2.1.1.2 Contact Adhesive

Adhesive shall be Type II, Class 1.

2.1.1.3 Lagging Adhesive

Lagging adhesives shall be nonflammable, fire-resistant in accordance with NFPA 90A, UL 723, and ASTM E 84. Adhesives shall be either the Class 1 or Class 2 type. Class 1 adhesive shall be pigmented white and be suitable for bonding fibrous glass cloth to faced and unfaced fibrous glass insulation board; for bonding cotton brattice cloth to faced and unfaced fibrous glass insulation board; for sealing edges of and bounding fibrous glass tape to joints of fibrous glass board; or for bonding lagging cloth to thermal insulation. Class 2 adhesive shall be pigmented white and be suitable for attaching fibrous glass insulation to metal surfaces. Lagging adhesives shall be applied in strict accordance with the manufacturer's recommendations.

2.1.2 Contact Adhesive

Adhesive may be dispersed in a nonhalogenated organic solvent with a low flash point (flash point plus or minus 25 degrees F) or, dispersed in a nonflammable organic solvent which shall not have a fire point below 200 degrees F. The adhesive shall not adversely affect, initially or in service, the insulation to which it is applied, nor shall it cause any corrosive effect on metal to which it is applied. Any solvent dispersing medium or volatile component of the adhesive shall have no objectionable door and shall not contain any benzene or carbon tetrachloride. The dried adhesive shall not omit nauseous, irritating, or toxic volatile matters or aerosols when the adhesive is heated to any temperature up to 22 degrees F. The adhesive shall be nonflammable, fire resistant conforming to ASTM E 84.

2.1.3 Caulking

ASTM C 920, Type S, Grade NS, Class 25, Use A.

2.1.4 Corner Angles

Nominal 0.016 inch aluminum 1 by 1 inch with factory applied kraft backing. Aluminum shall be ASTM B 209, Alloy 3003, 3105, or 5005.

2.1.5 Finishing Cement

Mineral fiber hydraulic-setting thermal insulating cement ASTM C 449.

2.1.6 Glass Tape

Glass tape shall meet the requirements of UL 723 and ASTM E 84.

2.1.6.1 Plain Weave, Untreated

The ends shall be properly interlocked with the picks to ensure that there shall be no raveling of the tape edges. It shall have an average weight of 5.8 plus or minus 10 percent ounces per square yard, an average thickness

of 0.007 plus or minus 0.001 inches, warp ends/wales of 42 plus or minus 2 per inch or filling picks/courses of 32 plus or minus 2 per inch, a minimum breaking strength of 150 pounds per inch of width, and after heating to 900 degrees F for 2 hours a minimum breaking strength of 40 pounds per inch of width.

2.1.6.2 Knitted, Untreated

The wales shall be properly interlocked with the courses to ensure that there shall be no raveling of the tape edges. It shall have an average weight of 4.5 plus or minus 10 percent ounces per square yard, an average thickness of 0.007 plus or minus 0.001 inches, warp end/wales of 16 plus or minus 2 per inch, a minimum breaking strength of 40 pounds per inch of width, and after heating to 900 degrees F for 2 hours a minimum breaking strength of 21 pounds per inch of width.

2.1.6.3 Distortion Requirements

There shall be no distortion of the tape when a sample 24 inches in length is spread across a flat horizontal surface and observed for evidence of distortion (such as tendency to curl rather than lie flat). The width tolerance is plus or minus 1/8 inch.

2.1.6.4 Open-Weave Type

Tape shall be open-weave type and shall be used for embedding between coats of adhesive or coating materials.

2.1.7 Glass Cloth

Glass cloth shall be an untreated light weight satin weave. It shall be woven with an eight-harness satin weave and shall be fabricated from fibrous glass yarn. The yarn shall be made from low twist continuous filament glass fiber. The maximum average diameter of the glass fibers used for the yarns shall not exceed 0.000299 in. The cloth shall meet the requirements of UL 723 and the following properties.

Average weight	8.9 ounces/square yard
Fabric count warp ends	57 yarns/inch
Filling picks	54 yarns/inch

Minimum breaking strength

Warp	200 lb/inch
Filling	180 lb/inch
After heating to	900 degrees F for 2 hrs
Warp	60 lb/inch
Filling	60 lb/inch

Nominal width of the cloth shall have the following tolerances:

Up to and including	40 inch plus or 1/2 inch
Over	40 in and less than 60 in plus or minus 3/4 inch
Over	60 in plus or minus 1 inch

The cloth shall be furnished in 50 plus or minus 5 yard rolls, the minimum

length in a spliced roll shall be 4 yards, and a spliced roll shall contain no more than 3 pieces for each 50 yard length. Open-Weave type embedding between coats of adhesive or coating materials.

2.1.8 Staples

Outward clinching type monel.

2.1.9 Jackets

ASTM C 921, Type I, moisture vapor transmission maximum 0.02 perms, puncture resistance minimum 50 Beach units on all surfaces except concealed ductwork, where a minimum puncture resistance of 25 Beach units is allowable, tensile strength minimum 35 pound/inch width; Type II, puncture resistance minimum 25 Beach units, tensile strength minimum 20 pound/inch width. Aluminum jackets shall be corrugated, embossed or smooth sheet, 0.016 inch nominal thickness; ASTM B 209, Temper H14, Temper H16, Alloy 3003, 5005, or 3105 with factory applied moisture barrier. Corrugated aluminum jacket shall not be used outdoors. Aluminum jacket securing bands shall be Type 304 stainless steel, 0.015 inch thick, 1/2 inch wide for pipe under 12 inch diameter and 3/4 inch wide for pipe over 12 inch diameter. Aluminum jacket circumferential seam bands shall be 2 by 0.016 inch aluminum matching jacket material. Bands for insulation belowground shall be 3/4 by 0.020 inch thick stainless steel, or fiberglass reinforced tape. The jacket may, at the option of the Contractor, be provided with a factory fabricated Pittsburg or "Z" type longitudinal joint. When the "Z" joint is used, the bands at the circumferential joints shall be designed by the manufacturer to seal the joints and hold the jacket in place. Polyvinyl chloride (PVC) jacket and fitting covers shall be FS L-P-535, Composition A, Type II, with minimum thickness 0.030 inch. Insulation under PVC jacket shall meet jacket manufacturer's written recommendations.

2.1.10 Vapor Barrier Coating

The vapor barrier coating shall be fire and water resistant and appropriately selected for either outdoor or indoor service. Color shall be white. The water vapor permeance of the compound shall not exceed 0.05 perm and shall be determined according to procedure B of ASTM E 96 utilizing apparatus described in ASTM E 96. The coating shall be a nonflammable, fire resistant type conforming to ASTM E 84, NFPA 90A, and UL 723. The flash point of the compound shall not be less than 80 degrees F and shall be determined in accordance with ASTM D 3278. All other application and service properties shall be in accordance with ASTM C 647.

2.1.11 Wire

Soft annealed ASTM A 580 Type 302, 304 or 316 stainless steel, 16 or 18 gauge.

2.2 PIPE INSULATION MATERIALS

Pipe insulation materials shall be as follows:

2.2.1 Aboveground Cold Pipeline

Insulation for minus 30 degrees to plus 60 degrees F shall be as follows:

2.2.1.1 Flexible Cellular Insulation

ASTM C 534, Type I.

2.2.2 Aboveground Hot Pipeline

For aboveground hot pipeline (above 60 degrees F) insulation the following requirements shall be met.

2.2.2.1 Mineral Fiber

ASTM C 547, Class 1 for use up to 450 degrees F and Class 2 for use up to 650 degrees F. Class 1 or Class 2 as required for the operating temperature range.

2.2.2.2 Cellular Glass

ASTM C 552, Type II and Type III.

2.2.3 Belowground Pipeline Insulation

ASTM C 552, Type II.

2.3 DUCT INSULATION MATERIALS

Duct insulation materials shall be as follows:

2.3.1 Rigid Mineral Fiber

ASTM C 612, Class 1.

2.3.2 Flexible Mineral Fiber

ASTM C 553, Type I, Class B-2.

2.3.3 Cellular Glass

ASTM C 552, Type I.

2.4 EQUIPMENT INSULATION MATERIALS

Equipment insulation materials shall be as follows:

2.4.1 Cold Equipment Insulation

For temperatures below 60 degrees F.

2.4.1.1 Rigid Mineral Fiber

ASTM C 612, Class 1.

2.4.1.2 Flexible Mineral Fiber

ASTM C 553, Type I, Class B-4.

2.4.1.3 Cellular Glass

ASTM C 552, Type I, Type III, or Type IV as required.

2.4.1.4 Flexible Cellular Insulation

ASTM C 534, Type II.

2.4.2 Hot Equipment Insulation

For temperatures above 60 degrees F.

2.4.2.1 Rigid Mineral Fiber

ASTM C 612, Class 2, 3, 4 or 5 as required for temperature encountered to 1800 degrees F.

2.4.2.2 Flexible Mineral Fiber

ASTM C 553, Type I, Class B-4 to 400 degrees F.

2.4.2.3 Cellular Glass

ASTM C 552, Type I, Type III, or Type IV as required.

PART 3 EXECUTION

3.1 APPLICATION - GENERAL

3.1.1 Installation

Except as otherwise specified, material shall be installed in accordance with the manufacturer's written instructions. Insulation materials shall not be applied until tests specified in other sections of this specification are completed. Material such as rust, scale, dirt and moisture shall be removed from surfaces to receive insulation. Insulation shall be kept clean and dry. Insulation shall not be removed from its shipping containers until the day it is ready to use and shall be returned to like containers or equally protected from dirt and moisture at the end of each workday. Insulation that becomes dirty shall be thoroughly cleaned prior to use. If insulation becomes wet or if aforementioned cleaning does not restore the surfaces to like new condition, the insulation may be rejected, and if rejected, shall be immediately removed from the jobsite. Joints shall be staggered on multilayer insulation. Mineral fiber thermal insulating cement shall be mixed with demineralized water when used on stainless steel surfaces. Insulation, jacketing and accessories shall be installed in accordance with MICA-01 standard plates except where modified herein or on the drawings.

3.1.2 Firestopping

Where pipes and ducts pass through fire walls, fire partitions, above grade floors, and fire rated chase walls, the penetration shall be sealed with firestopping materials as specified in Section 07270 FIRESTOPPING.

3.1.3 Painting and Finishing

Painting shall be as specified in Section 09900 PAINTING, GENERAL.

3.1.4 Flexible Cellular Insulation

Flexible cellular insulation shall be installed with seams and joints sealed with a contact adhesive. Flexible cellular insulation shall not be used on surfaces greater than 200 degrees F. Insulation exposed to weather and not shown to have jacketing shall be protected with two coats

of UV resistant finish as recommended by the manufacturer after the adhesive is dry.

3.1.5 Welding

No welding shall be done on piping, duct or equipment without written approval of the Contracting Officer. The capacitor discharge welding process may be used for securing metal fasteners to duct.

3.2 PIPE INSULATION INSTALLATION

3.2.1 Pipe Insulation

3.2.1.1 General

Pipe insulation shall be continuous and installed on fittings and appurtenances unless specified otherwise. Installation shall be with full length units of insulation and using a single cut piece to complete a run. Cut pieces or scraps abutting each other shall not be used. Pipe insulation shall be omitted on the following:

a. Pipe used solely for fire protection.

b. Chromium plated pipe to plumbing fixtures. However, fixtures for use by the physically handicapped shall have the hot water supply and drain, including the trap, insulated where exposed.

c. Vertical portions of interior roof drains.

d. Sanitary drain lines.

e. Unions in pipe above 60 degrees F.

f. Strainers in pipe above 60 degrees F.

g. Check valves in pipe above 60 degrees F.

3.2.1.2 Pipes Passing Through Sleeves

a. Pipe insulation shall be continuous through the sleeve .

b. An aluminum jacket with factory applied moisture barrier shall be provided over the insulation wherever penetrations require sealing.

c. Where penetrating interior walls, the aluminum jacket shall extend 2 inches beyond either side of the wall and shall be secured on each end with a band.

d. Where penetrating floors, the aluminum jacket shall extend from a point below the backup material to a point 10 inches above the floor with one band at the floor and one not more than 1 inch from the end of the aluminum jacket.

e. Where penetrating waterproofed floors, the aluminum jacket shall extend from below the backup material to a point 2 inches above the flashing with a band 1 inch from the end of the aluminum jacket.

f. Where penetrating exterior walls, the aluminum jacket required for

pipe exposed to weather shall continue through the sleeve to a point 2 inches beyond the interior surface of the wall.

g. Where penetrating roofs, pipe shall be insulated as required for interior service to a point flush with the top of the flashing and sealed with vapor barrier coating. The insulations for exterior application shall butt tightly to the top of flashing and interior insulation. The exterior aluminum jacket shall extend 2 inches down beyond the end of the insulation to form a counter flashing. The flashing and counter flashing shall be sealed underneath with caulking.

3.2.1.3 Pipes Passing Through Hangers

a. Insulation, whether hot or cold application, shall be continuous through hangers. All horizontal pipes 2 inches and smaller shall be supported on hangers with the addition of a Type 40 protection shield to protect the insulation in accordance with MSS SP-69. Whenever insulation shows signs of being compressed, or when the insulation or jacket shows visible signs of distortion at or near the support shield, insulation inserts as specified below for piping larger than 2 inches shall be installed.

b. Horizontal pipes larger than 2 inches at 60 degrees F and above shall be supported on hangers with the addition of a Type 39 saddle in accordance with MSS SP-69.

c. Horizontal pipes larger than 2 inches below 60 degrees F shall be supported on hangers with the addition of a Type 40 protection shield in accordance with MSS SP-69. An insulation insert of cellular glass or calcium silicate shall be installed above each shield. The insert shall cover not less than the bottom 180 degree arc of the pipe. Inserts shall be the same thickness as the insulation, and shall extend 2 inches on each end beyond the protection shield. When insulation inserts are required per the above, and the insulation thickness is less than 1 inch, wooden or cork dowels or blocks may be installed between the pipe and the shield to prevent the weight of the pipe from crushing the insulation as an option to installing insulation inserts. The insulation jacket shall be continuous over the wooden dowel, wooden block, or insulation insert.

d. Vertical pipes shall be supported with either Type 8 or Type 42 riser clamps with the addition of two Type 40 protection shields in accordance with MSS SP-69 covering the 360 degree arc of the insulation. An insulation insert of cellular glass shall be installed between each shield and the pipe. The insert shall cover the 360 degree arc of the pipe. Inserts shall be the same thickness as the insulation, and shall extend 2 inches on each end beyond the protection shield. When insulation inserts are required per the above, and the insulation thickness is less than 1 inch, wooden or cork dowels or blocks may be installed between the pipe and the shield to prevent the hanger from crushing the insulation as an option instead of installing insulation inserts. The insulation jacket shall be continuous over the wooden dowel, wooden block, or insulation insert. The verticle weight of the pipe shall be supported with hangers located in a horizontal section of the pipe. When the pipe riser is longer than 30 feet, the weight of the pipe shall be additionally supported hangers in

the vertical run of the pipe which are directly clamped to the pipe, penetrating the pipe insulation. These hangers shall be insulated and the insulation jacket sealed as indicated herein for anchors in a similar service.

e. Inserts shall be covered with a jacket material of the same appearance and quality as the adjoining pipe insulation jacket, shall overlap the adjoining pipe jacket 1-1/2 inches, and shall be sealed as required for the pipe jacket.

3.2.2 Aboveground Cold Pipelines

The following shall be included for aboveground cold pipelines (minus 30 degrees to Plus 60 degrees F):

a. Domestic cold and chilled drinking water.

b. Make-up water.

c. Horizontal and vertical portions of interior roof drains.

d. Chilled water.

e. Air conditioner condensate drains.

3.2.3 Insulation Thickness

Thickness of insulation shall be as indicated in TABLE I.

TABLE I

Pipe Size (Inches)

Service or Range of Temp (degrees F)	Run-outs* 1/4 to 1-1/2	1/4 to 1-1/4	1-1/2 to 3	3-1/2 to 5	6 to 10	11 to 24	25 to 33
60 to 35 (CG)	1-1/2	1-1/2	1-1/2	2	2	2	2
34 to 0 (CG)	2-1/2	2-1/2	2-1/2	2-1/2	3	3	3-1/2
-1 to -30 (CG)	3	3	3	3	3-1/2	3-1/2	4
Domestic Cold Water (CG) and Interior Roof Drain Lines (Horizontal portions only)	1	1	1	1	1-1/2	1-1/2	1-1/2

NOTES:
CG - Cellular Glass

*When runouts to terminal units exceed 12 feet, the entire length of

runout shall be insulated like the main feed pipe.

3.2.3.1 Jacket for Fibrous and Cellular Glass Insulated Pipe

Insulation shall be covered with a factory applied vapor barrier jacket or field applied seal welded PVC jacket. Insulation inside the building shown to be protected with an aluminum jacket shall have the insulation and vapor barrier jacket installed as specified herein. The aluminum jacket shall be installed as specified for piping exposed to weather, except sealing of the laps of the aluminum jacket is not required.

3.2.3.2 Insulation for Straight Runs (Fibrous and Cellular Glass)

a. Insulation shall be applied to the pipe with joints tightly butted. The ends of fibrous insulation shall be sealed off with vapor barrier coating at intervals not to exceed 15 feet.

b. Longitudinal laps of the jacket material shall overlap not less than 1-1/2 inches. Butt strips 3 inches wide shall be provided for circumferential joints.

c. Laps and butt strips shall be secured with adhesive and stapled on 4 inch centers if not factory self-sealing.

d. Factory self-sealing lap systems may be used when the ambient temperature is between 40 degrees and 120 degrees F during installation. The lap system shall be installed in accordance with manufacturer's recommendations. Stapler shall be used only if specifically recommended by the manufacturer. Where gaps occur, the section shall be replaced or the gap repaired by applying adhesive under the lap and then stapling.

e. All Staples, including those used to repair factory self-seal lap systems, shall be coated with a vapor barrier coating. All seams, except those on factory self-seal systems shall be coated with vapor barrier coating.

f. Breaks and punctures in the jacket material shall be patched by wrapping a strip of jacket material around the pipe and securing it with adhesive, stapling, and coated with vapor barrier coating. The patch shall extend not less than 1-1/2 inches past the break.

g. At penetrations such as thermometers, the voids in the insulation shall be filled and sealed with vapor barrier coating.

3.2.3.3 Insulation for Fittings and Accessories

a. Pipe insulation shall have ends thoroughly coated with a vapor barrier coating not more than 6 inches from each flange, union, valve, anchor, or fitting in all directions.

b. Insulation may be premolded or segmented. Insulation of the same thickness and conductivity as the adjoining pipe insulation shall be used. If nesting size insulation is used, the insulation should be overlapped 2 inches or one pipe diameter. Loose fill mineral fiber or insulating cement shall be used to fill the voids. Insulation for elbows less than 3 inch size shall be premolded. Insulation for elbows 3 inch size and larger shall be either premolded or segmented. Elbows insulated using segments shall not

have less than 3 segments per elbow. Insulation may be secured by wire or tape until finish is applied.

c. Upon completion of installation of insulation on flanges, unions, valves, anchors, fittings and accessories, terminations and insulation not protected by factory vapor barrier jackets or PVC fitting covers shall be protected with two coats of vapor barrier coating with a minimum total thickness of 1/16th inch, applied with glass tape embedded between coats. Tape seams shall overlap 1 inch. The coating shall extend out onto the adjoining pipe insulation 2 inches.

d. Anchors attached directly to the pipe shall be insulated for a sufficient distance to prevent condensation but not less than 6 inches from the insulation surface.

e. Flexible connections at pumps and other equipment shall be insulated with 1/2 inch flexible cellular insulation, unless otherwise indicated.

f. Insulation shall be marked showing the location of unions, strainers, and check valves.

3.2.3.4 Optional PVC Fitting Covers

At the option of the Contractor, premolded, one or two piece PVC fitting covers may be used in lieu of the vapor barrier and embedded glass tape. Factory premolded insulation segments shall be used under the fitting covers for elbows. Insulation segments shall be the same thickness as adjoining pipe insulation and the insulation shall be protected with one coat of vapor barrier coating under the PVC cover. The covers shall be secured by PVC vapor barrier tape, adhesive, seal-welding or with tacks made for securing PVC covers. Seams in the cover, and tacks and laps to adjoining pipe insulation jacket, shall be sealed with vapor barrier tape to ensure that the assembly has a continuous vapor seal. Factory or fieldcut blanket insulation shall not be used on pipe below 60 degrees F.

3.2.4 Aboveground Hot Pipelines

For hot pipelines above 60 degrees F the following shall be included:

a. Domestic hot water.

b. Hot water heating.

3.2.4.1 Insulation Thickness

Insulation thickness shall be determined using the manufacturer's published thermal conductivity k, and the applicable TABLE II or TABLE III. Insulation thickness for pipelines handling 60 degrees F to 200 degrees F domestic hot water shall be as indicated in TABLE IV.

TABLE II

REQUIRED THICKNESS (IN INCHES) OF PIPE INSULATION
FOR HANDLING STEAM TO 15 PSIG AND FLUIDS OTHER THAN

DOMESTIC HOT WATER TO 250 DEGREES F

k = thermal conductivity (average) Btu/hr. sq. ft. degree/in. thickness at a mean temperature of 75 degrees F

Thermal conductivity k	Pipe Size, Inches 2 or less	2-1/2 to 3	4	5 to 6	8	10	12
0.25	1.5	1.5	2.0	2.0	2.0	2.0	2.5
0.30	1.5	2.0	2.5	2.5	2.5	2.5	3.0
0.35	2.0	2.5	2.5	2.5	3.5	3.5	3.5
0.40	2.5	3.5	3.5	3.0	4.0	4.0	4.0
0.45	3.0	4.0	4.0	3.5	4.5	4.5	4.5

TABLE IV

REQUIRED THICKNESS (IN INCHES) OF PIPE INSULATION

FOR PIPES HANDLING DOMESTIC HOT WATER. MF - MINERAL FIBER

CG - CELLULAR GLASS

Range of Service (degrees F)	Runouts* 1/4 to 1-1/2"	Pipe Size, Inches 2 or less	2-1/2 to 3	4	5 to 6	8	10	12
61 to 200 (MF)	1.0	1.0	1.5	1.5	1.5	1.5	1.5	1.5
(CG)	1.5	1.5	2.5	2.5	2.0	2.0	2.0	2.0

*When runouts to terminal units exceed 12 feet, the entire length of runout shall be insulated like the main feed pipe.

3.2.4.2 Jacket for Insulated Pipe

Insulation shall be covered with a factory applied Type II jacket or field applied aluminum where required or seal welded PVC.

3.2.4.3 Insulation for Straight Runs

a. Insulation shall be applied to the pipe with joints tightly butted.

b. Longitudinal laps of the jacket material shall overlap not less than 1-1/2 inches, and butt strips 3 inches wide shall be provided for circumferential joints.

c. Laps and butt strips shall be secured with adhesive and stapled on 4 inch centers if not factory self-sealing. Adhesive may be omitted where pipe is concealed.

d. Factory self-sealing lap systems may be used when the ambient

temperature is between 40 degrees and 120 degrees F and shall be installed in accordance with manufacturer's instructions. Laps and butt strips shall be stapled whenever there is nonadhesion of the system. Where gaps occur, the section shall be replaced or the gap repaired by applying adhesive under the lap and then stapling.

e. Breaks and punctures in the jacket material shall be patched by wrapping a strip of jacket material around the pipe and be secured with adhesive and stapled on 4 inch centers if not factory self-sealing. Adhesive may be omitted where pipe is concealed. Patch shall extend not less than 1-1/2 inches past the break.

3.2.4.4 Insulation for Fittings and Accessories

a. The run of the line pipe insulation shall have the ends brought up to the item.

b. Insulation of the same thickness and conductivity as the adjoining pipe insulation, either premolded or segmented, shall be placed around the item abutting the adjoining pipe insulation, or if nesting size insulation is used, overlapping 2 inches or one pipe diameter. Loose fill mineral fiber or insulating cement shall be used to fill the voids. Insulation for elbows less than 3 inch size shall be premolded. Insulation for elbows 3 inch size and larger shall be either premolded or segmented. Elbows insulated using segments shall have not less than 3 segments per elbow. Insulation may be wired or taped on until finish is applied.

c. Upon completion of installation of insulation on flanges, unions, valves, anchors, fittings and accessories, terminations and insulation not protected by factory vapor barrier jackets or PVC fitting covers shall be protected with two coats of Class 1 adhesive applied with glass tape embedded between coats. Tape seams shall overlap 1 inch. Adhesive shall extend onto the adjoining insulation not less than 2 inches. The total dry film thickness shall be not less than 1/16 inch.

d. Insulation terminations shall be tapered to unions at a 45-degree angle.

e. At the option of the Contractor, factory premolded one- or two-piece PVC fitting covers may be used in lieu of the adhesive and embedded glass tape. Factory premolded segments or factory or field cut blanket insert insulation segments shall be used under the cover and shall be the same thickness as adjoining pipe insulation. The covers shall be secured by PVC vapor barrier tape, adhesive, seal-welding or with tacks made for securing PVC covers.

3.2.5 Piping Exposed to Weather

Piping exposed to weather shall be insulated and jacketed as specified for the applicable service inside the building. After this procedure, an aluminum jacket shall be applied. PVC jacketing requires no factory applied jacket beneath it.

3.2.5.1 Aluminum Jacket

The jacket for hot piping may be factory applied. The jacket shall overlap not less than 2 inches at longitudinal and circumferential joints and shall be secured with bands at not more than 12 inch centers. Longitudinal joints shall be overlapped down to shed water and located at 4 or 8 o'clock positions. Joints on piping 60 degrees F and below shall be sealed with caulking while overlapping to prevent moisture penetration. Where jacketing on piping 60 degrees F and below abuts an uninsulated surface, joints shall be caulked to prevent moisture penetration. Joints on piping above 60 degrees F shall be sealed with a moisture barrier.

3.2.5.2 Insulation for Fittings

Flanges, unions, valves, fittings, and accessories shall be insulated and finished as specified for the applicable service. Two coats of an emulsion type weatherproof mastic recommended by the insulation manufacturer shall be applied with glass tape embedded between coats. Tape overlaps shall be not less than 1 inch and the adjoining aluminum jacket not less than 2 inches. Factory preformed aluminum jackets may be used in lieu of the above. Molded PVC fitting covers shall be used with PVC lagging and adhesive welded moisture tight.

3.2.5.3 PVC Lagging

PVC lagging shall be ultraviolet resistant and adhesive welded vapor tight with manufacturer's recommended adhesive. Installation shall include provision for thermal expansion.

3.3 DUCT INSULATION INSTALLATION

Except for oven hood exhaust duct insulation, corner angles shall be installed on external corners of insulation on ductwork in exposed finished spaces before covering with jacket. Duct insulation shall be omitted on the following:

a. Site-erected air conditioning casings and plenums constructed of factory-insulated sheet metal panels.

b. Exposed supply and return ducts in air conditioned spaces unless otherwise shown. Air conditioned spaces shall be defined as those spaces directly supplied with conditioned air, hot or cold, or provided with a cooling or heating device such as a fan-coil unit.

c. Return ducts in ceiling spaces or as indicated. Ceiling spaces shall be defined as those spaces between the ceiling and bottom of floor deck or roof deck inside the air conditioned space insulated envelope.

d. Factory preinsulated flexible ducts.

e. Ducts within HVAC equipment.

f. Exhaust air ducts unless noted.

3.3.1 Insulation and Vapor Barrier for Cold Air Duct

Insulation and Vapor Barrier for Cold Air Duct 60 degrees F:) Ducts and associated equipment shall be insulated to a thickness of 2 inches. The following shall be insulated:

a. Supply ducts.

b. Return air ducts inside mechanical room only.

c. Flexible runouts (field-insulated).

d. Plenums.

e. Duct-mounted coil casings.

f. Coil headers and return bends.

g. Coil casings.

h. Fresh air intake ducts.

i. Site-erected air conditioner casings.

j. Combustion are intake ducts.

Insulation for rectangular ducts shall be flexible type where concealed, minimum density 3/4 pcf and rigid type minimum density 3 pcf. Insulation for round ducts shall be flexible type, minimum density 3/4 pcf with a factory Type I jacket. Fibrous and cellular glass insulation on duct shall be provided with a factory-applied Type I vapor barrier jacket. Vapor barrier coating finish where indicated to be used shall be accomplished by applying two coats of vapor barrier coating with a layer of glass cloth embedded between the coats. The total dry film thickness shall be approximately 1/16 inch. Duct insulation shall be continuous through sleeves and prepared openings except fire wall penetrations. Duct insulation terminating at fire dampers, shall be continuous over the damper collar and retaining angle of fire dampers, which are exposed to unconditioned air and which may be prone to condensate formation. Duct insulation and vapor barrier shall cover the collar, neck, and any uninsulated surfaces of diffusers, registers and grills. Vapor barrier materials shall be applied to form a complete unbroken vapor seal over the insulation.

3.3.1.1 Installation on Duct

a. For rectangular, oval or round ducts, insulation shall be attached by applying Class 2 adhesive around the entire perimeter of the duct in 6 inch wide strips on 12 inch centers.

b. For rectangular 24 inches and larger insulation shall be additionally secured to bottom of ducts by the use of mechanical fasteners. Fasteners shall be spaced on 18 inch centers and not more than 18 inches from duct corners.

c. For rectangular and round ducts, mechanical fasteners shall be provided on sides of duct risers for all duct sizes. Fasteners shall be spaced on 18 inch centers and not more than 18 inches from duct corners.

d. Insulation shall be impaled on the mechanical fasteners where used and shall be pressed thoroughly into the adhesive. Care shall be taken to ensure vapor barrier jacket joints overlap 2 inches. The insulation shall not be compressed to a thickness less than that specified. Insulation shall be carried over standing seams and

trapeze-type duct hanger.

e. Self-locking washers shall be installed where mechanical fasteners are used. The pin shall be trimmed back and bent over.

f. Jacket overlaps shall be secured under the overlap with Class 2 adhesive and stapled on 4 inch centers. Staples and seams shall be coated with a brush coat of vapor barrier coating.

g. Breaks in the jacket material shall be covered with patches of the same material as the vapor barrier. The patches shall extend not less than 2 inches beyond the break or penetration in all directions and shall be secured with Class 2 adhesive and staples. Staples and joints shall be sealed with a brush coat of vapor barrier coating.

h. At jacket penetrations such as hangers thermometers and damper operating rods, voids in the insulation shall be filled and the penetration sealed with a brush coat of vapor barrier coating.

i. Insulation terminations and pin punctures shall be sealed and flashed with a reinforced vapor barrier coating finish. The coating shall overlap the adjoining insulation and uninsulated surface 2 inches. Pin puncture coatings shall extend 2 inches from the puncture in all directions.

j. Where insulation standoff brackets occur, insulation shall be extended under the bracket and the jacket terminated at the bracket.

3.3.2 Ducts Handling Air for Dual Purpose

For air handling ducts for dual purpose (below and above 60 degrees F,) ducts shall be insulated as specified for cold air duct.

3.3.3 Duct Test Holes

After duct systems have been tested, adjusted, and balanced, breaks in the insulation and jacket shall be repaired in accordance with the applicable section of this specification for the type of duct insulation to be repaired.

3.4 EQUIPMENT INSULATION INSTALLATION

3.4.1 General

Removable insulation sections shall be provided to cover parts of equipment which must be opened periodically for maintenance including vessel covers, fasteners, flanges and accessories. Equipment insulation shall be omitted on the following:

a. Handholes.

b. Boiler manholes.

c. Cleanouts.

d. ASME stamps.

e. Manufacturer's nameplates.

3.4.2 Insulation for Cold Equipment

Cold equipment below 60 degrees F: Insulation shall be furnished on equipment handling media below 60 degrees F including the following:

a. Pumps.

b. Refrigeration equipment parts that are not factory insulated.

c. Drip pans under chilled equipment.

d. Cold water storage tanks.

e. Cold and chilled water pumps.

f. Roof drain bodies.

g. Air handling equipment parts that are not factory insulated.

h. Expansion and air separation tanks.

3.4.2.1 Insulation Type

Insulation shall be suitable for the temperature encountered. Thicknesses shall be as follows:

a. Equipment Handling Media Between 35 and 60 degrees F: 1-1/2 inch thick mineral fiber, 2 inch thick cellular glass.

b. Equipment Handling Media Between 0 degree F and 34 degrees F: 2-1/2 inch thick mineral fiber, 3-1/2 inch thick cellular glass.

c. Equipment Handling Media Between Minus 30 degrees F and Minus 1 degree F: 3 inch thick mineral fiber, 4 inch thick cellular glass.

3.4.2.2 Pump Insulation

a. Pumps shall be insulated by forming a box around the pump housing. The box shall be constructed by forming the bottom and sides using joints which do not leave raw ends of insulation exposed. Joints between sides and between sides and bottom shall be joined by adhesive with lap strips for rigid mineral fiber and contact adhesive for flexible cellular insulation. The box shall conform to the requirements of MICA-01 plate No. 49 when using flexible cellular insulation. Joints between top cover and sides shall fit tightly forming a female shiplap joint on the side pieces and a male joint on the top cover, thus making the top cover removable.

b. Exposed insulation corners shall be protected with corner angles.

c. Upon completion of installation of the insulation, including removable sections, two coats of vapor barrier coating shall be applied with a layer of glass cloth embedded between the coats. The total dry thickness of the finish shall be 1/16 inch. A parting line shall be provided between the box and the removable sections allowing the removable sections to be removed without disturbing the insulation coating. Caulking shall be applied to

parting line, between equipment and removable section insulation, and at all penetrations.

3.4.2.3 Other Equipment

a. Insulation shall be formed or fabricated to fit the equipment. To ensure a tight fit on round equipment, edges shall be beveled and joints shall be tightly butted and staggered.

b. Insulation shall be secured in place with bands or wires at intervals as recommended by the manufacturer but not more than 12 inch centers. Insulation corners shall be protected under wires and bands with suitable corner angles.

c. Cellular glass insulation shall be set in a coating of bedding compound, and joints shall be sealed with bedding compound as recommended by the manufacturer. Mineral fiber insulation joints shall be filled with finishing cement.

d. Insulation on heads of heat exchangers shall be removable. Removable section joints shall be fabricated using a male-female shiplap type joint. The entire surface of the removable section shall be finished by applying two coats of vapor barrier coating with a layer of glass cloth embedded between the coats. The total dry thickness of the finish shall be 1/16 inch.

e. Exposed insulation corners shall be protected with corner angles.

f. Insulation on equipment with ribs shall be applied over 6 by 6 inches by 12 gauge welded wire fabric which has been cinched in place, or if approved by the Contracting Officer, spot welded to the equipment over the ribs. Insulation shall be secured to the fabric with J-hooks and 2 by 2 inches washers or shall be securely banded or wired in place on 12 inch centers.

3.4.2.4 Vapor Barrier

Upon completion of installation of insulation, penetrations shall be caulked. Two coats of vapor barrier coating shall be applied over insulation, including removable sections, with a layer of glass cloth embedded between the coats. The total dry thickness of the finish shall be 1/16 inch. Caulking shall be applied to parting line between equipment and removable section insulation.

3.4.3 Insulation for Hot Equipment

Hot equipment above 60 degrees F: Insulation shall be furnished on equipment handling media above 60 degrees F including the following:

a. Converters.

b. Water heaters.

c. Air separation tanks.

d. Boiler flue gas connection from boiler to stack (if inside).

e. Induced draft fans.

3.4.3.1 Insulation

Insulation shall be suitable for the temperature encountered. Shell and tube-type heat exchangers shall be insulated for the temperature of the shell medium. Insulation thicknesses shall be as follows:

a. Equipment handling media to 600 degrees F: 6 inch thick material.

3.4.3.2 Insulation of Pumps

Pumps shall be insulated by forming a box around the pump housing. The box shall be constructed by forming the bottom and sides using joints which do not leave raw ends of insulation exposed. Bottom and sides shall be banded to form a rigid housing which does not rest on the pump. Joints between top cover and sides shall fit tightly. The top cover shall have a joint forming a female shiplap joint on the side pieces and a male joint on the top cover, thus making the top cover removable. Two coats of Class I adhesive shall be applied over insulation, including removable sections, with a layer of glass cloth embedded between the coats. A parting line shall be provided between the box and the removable sections allowing the removable sections to be removed without disturbing the insulation coating. The total dry thickness of the finish shall be 1/16 inch. Caulking shall be applied to parting line of the removable sections and penetrations.

3.4.3.3 Other Equipment

a. Insulation shall be formed or fabricated to fit the equipment. To ensure a tight fit on round equipment, edges shall be beveled and joints shall be tightly butted and staggered.

b. Insulation shall be secured in place with bands or wires at intervals as recommended by the manufacturer but not greater than 12 inch centers. Insulation corners shall be protected under wires and bands with suitable corner angles.

c. Cellular glass insulation shall be set in a coating of bedding compound as recommended by the manufacturer, and joints shall be sealed with bedding compound. Mineral fiber joints shall be filled with finishing cement.

d. Insulation on heads of heat exchangers shall be removable. The removable section joint shall be fabricated using a male-female shiplap type joint. Entire surface of the removable section shall be finished as specified.

e. Exposed insulation corners shall be protected with corner angles.

f. On equipment with ribs such as boiler flue gas connection and draft fans, insulation shall be applied over 6 by 6 inches by 12 gauge welded wire fabric which has been cinched in place, or if approved by the Contracting Officer, spot welded to the equipment over the ribs. Insulation shall be secured to the fabric with J-hooks and 2 by 2 inches washers or shall be securely banded or wired in place on 12 inch (maximum) centers.

g. Upon completion of installation of insulation, penetrations shall be caulked. Two coats of Class I adhesive shall be applied over insulation, including removable sections, with a layer of glass cloth embedded between the coats. The total dry thickness of the

finish shall be 1/16 inch. Caulking shall be applied to parting line between equipment and removable section insulation.

3.4.4 Equipment Handling Dual Temperature Media

Below and above 60 degrees F: Equipment handling dual temperature media shall be insulated as specified for cold equipment.

3.4.5 Equipment Exposed to Weather

3.4.5.1 Installation

Equipment exposed to weather shall be insulated and finished in accordance with the requirements for ducts exposed to weather in paragraph DUCT INSULATION INSTALLATION.

3.4.5.2 Optional Panels

At the option of the Contractor, prefabricated metal insulation panels may be used in lieu of the insulation and finish previously specified. Thermal performance shall be equal to or better than that specified for field applied insulation. Panels shall be the standard catalog product of a manufacturer of metal insulation panels. Fastenings, flashing, and support system shall conform to published recommendations of the manufacturer for weatherproof installation that shall prevent moisture from entering the insulation. Panels shall be designed to accommodate thermal expansion and to support a 250 pound walking load without permanent deformation or permanent damage to the insulation. Exterior metal cover sheet shall be aluminum and exposed fastenings shall be stainless steel or aluminum.

-- End of Section --

SECTION TABLE OF CONTENTS

DIVISION 15 - MECHANICAL

SECTION 15330

WET PIPE SPRINKLER SYSTEM, FIRE PROTECTION

06/94

PART 1 GENERAL

1.1 REFERENCES
1.2 GENERAL REQUIREMENTS
1.2.1 Hydraulic Design
1.2.1.1 Hose Demand
1.2.1.2 Basis for Calculations
1.2.2 Sprinkler Spacing
1.3 SUBMITTALS
1.4 HYDRAULIC CALCULATIONS
1.5 SUBMITTAL PREPARER'S QUALIFICATIONS
1.6 INSTALLER QUALIFICATIONS
1.7 REGULATORY REQUIREMENTS
1.8 DELIVERY AND STORAGE

PART 2 PRODUCTS

2.1 GENERAL EQUIPMENT REQUIREMENTS
2.1.1 Standard Products
2.1.2 Requirements for Fire Protection Service
2.1.3 Nameplates
2.2 UNDERGROUND PIPING SYSTEMS
2.2.1 Pipe
2.2.2 Fittings and Gaskets
2.3 ABOVEGROUND PIPING SYSTEMS
2.3.1 Steel Piping System
2.3.1.1 Steel Pipe
2.3.1.2 Fittings for Non-Grooved Steel Pipe
2.3.1.3 Grooved Mechanical Joints and Fittings
2.3.1.4 Flanges
2.3.2 Copper Tube Systems
2.3.2.1 Copper Tube
2.3.2.2 Copper Fittings
2.3.3 Valves
2.3.3.1 Control Valve and Gate Valve
2.3.3.2 Check Valve
2.4 ALARM INITIATING AND SUPERVISORY DEVICES
2.4.1 Sprinkler Pressure (Waterflow) Alarm Switch
2.4.2 Valve Supervisory (Tamper) Switch
2.5 FIRE DEPARTMENT CONNECTION
2.6 SPRINKLERS
2.6.1 Upright Sprinkler
2.6.2 Pendent Sprinkler
2.6.3 Sidewall Sprinkler
2.7 DISINFECTING MATERIALS
2.7.1 Liquid Chlorine

2.7.2 Hypochlorites
2.8 ACCESSORIES
2.8.1 Sprinkler Cabinet
2.8.2 Pendent Sprinkler Escutcheon
2.8.3 Pipe Escutcheon
2.8.4 Sprinkler Guard
2.8.5 Identification Sign
2.9 DOUBLE-CHECK VALVE BACKFLOW PREVENTION ASSEMBLY

PART 3 EXECUTION

3.1 INSTALLATION REQUIREMENTS
3.2 ABOVEGROUND PIPING INSTALLATION
3.2.1 Protection of Piping Against Earthquake Damage
3.2.2 Piping in Exposed Areas
3.2.3 Piping in Finished Areas
3.2.4 Pendent Sprinklers
3.2.4.1 Pendent Sprinkler Locations
3.2.5 Upright Sprinklers
3.2.6 Pipe Joints
3.2.7 Reducers
3.2.8 Pipe Penetrations
3.2.9 Escutcheons
3.2.10 Inspector's Test Connection
3.2.11 Drains
3.2.12 Installation of Fire Department Connection
3.2.13 Identification Signs
3.3 UNDERGROUND PIPING INSTALLATION
3.4 EARTHWORK
3.5 ELECTRICAL WORK
3.6 STERILIZATION
3.7 FIELD PAINTING AND FINISHING
3.8 PRELIMINARY TESTS
3.8.1 Underground Piping
3.8.1.1 Flushing
3.8.1.2 Hydrostatic Testing
3.8.2 Aboveground Piping
3.8.2.1 Hydrostatic Testing
3.8.3 Testing of Alarm Devices
3.8.4 Main Drain Flow Test
3.9 FINAL ACCEPTANCE TEST

-- End of Section Table of Contents --

SECTION 15330

WET PIPE SPRINKLER SYSTEM, FIRE PROTECTION
06/94

PART 1 GENERAL

1.1 REFERENCES

The publications listed below form a part of this specification to the extent referenced. The publications are referred to in the text by basic designation only.

AMERICAN SOCIETY FOR TESTING AND MATERIALS (ASTM)

ASTM A 47	(1990) Ferritic Malleable Iron Castings
ASTM A 53	(1993a) Pipe, Steel, Black and Hot-Dipped, Zinc-Coated Welded and Seamless
ASTM A 135	(1993) Electric-Resistance-Welded Steel Pipe
ASTM A 183	(1983; R 1990) Carbon Steel Tract Bolts and Nuts
ASTM A 536	(1984; R 1993) Ductile Iron Castings
ASTM A 795	(1993) Black and Hot-Dipped Zinc-Coated (Galvanized) Welded and Seamless Steel Pipe for Fire Protection Use
ASTM B 88	(1993a) Seamless Copper Water Tube

AMERICAN SOCIETY OF MECHANICAL ENGINEERS (ASME)

ASME B16.1	(1989) Cast Iron Pipe Flanges and Flanged Fittings
ASME B16.3	(1992) Malleable Iron Threaded Fittings
ASME B16.4	(1992) Cast Iron Threaded Fittings
ASME B16.9	(1993) Factory-Made Wrought Steel Buttwelding Fittings
ASME B16.11	(1991) Forged Fittings, Socket-Welding and Threaded
ASME B16.18	(1984) Cast Copper Alloy Solder Joint Pressure Fittings
ASME B16.21	(1992) Nonmetallic Flat Gaskets for Pipe Flanges
ASME B16.22	(1989) Wrought Copper and Copper Alloy

	Solder Joint Pressure Fittings
ASME B18.2.1	(1981; Supple 1991; R 1992) Square and Hex Bolts and Screws (Inch Series)
ASME B18.2.2	(1987; R 1993) Square and Hex Nuts (Inch Series)

AMERICAN SOCIETY OF SANITARY ENGINEERING (ASSE)

ASSE 1015	(1993) Double Check Backflow Prevention Assembly

AMERICAN WATER WORKS ASSOCIATION (AWWA)

AWWA-01	(1992) Standard Methods for the Examination of Water and Wastewater
AWWA B300	(1992) Hypochlorites
AWWA B301	(1992) Liquid Chlorine
AWWA C104	(1990) Cement-Mortar Lining for Ductile-Iron Pipe and Fittings for Water
AWWA C110	(1993) Ductile-Iron and Gray-Iron Fittings, 3 In. through 48 In. (75 mm through 1200 mm), for Water and Other Liquids
AWWA C111	(1990) Rubber-Gasket Joints for Ductile-Iron Pressure Pipe and Fittings
AWWA C151	(1991) Ductile-Iron Pipe, Centrifugally Cast, for Water or Other Liquids
AWWA C203	(1991) Coal-tar Protective Coatings and Linings for Steel Water Pipelines - Enamel and Tape - Hot-Applied
AWWA M20	(1973) Manual: Water Chlorination Principles and Practices

FACTORY MUTUAL ENGINEERING AND RESEARCH (FM)

FM P7825	(1994; Supple I, II & III) Approval Guide

MANUFACTURERS STANDARDIZATION SOCIETY OF THE VALVE AND FITTINGS INDUSTRY (MSS)

MSS SP-71	(1990) Cast Iron Swing Check Valves, Flanges and Threaded Ends

NATIONAL FIRE PROTECTION ASSOCIATION (NFPA)

NFPA 13	(1994) Installation of Sprinkler Systems
NFPA 24	(1995) Installation of Private Fire Service Mains and Their Appurtenances

NFPA 1963	(1993) Fire Hose Connections

NATIONAL INSTITUE FOR CERTIFICATION IN ENGINEERING TECHNOLOGIES (NICET)

NICET 1014	(1992) Detail Manual for Certification in the Field of Fire Protection Engineering Technology (Field 003) Automatic Sprinkler System Layout

UNDERWRITERS LABORATORIES (UL)

UL-01	(1996; Supple) Building Materials Directory
UL-04	(1996; Supple) Fire Protection Equipment Directory

1.2 GENERAL REQUIREMENTS

Wet pipe sprinkler system shall be provided in areas indicated on the drawings. The sprinkler system shall provide fire sprinkler protection for the entire area. Except as modified herein, the system shall be designed and installed in accordance with NFPA 13. Pipe sizes in the addition which are not indicated on drawings shall be determined by hydraulic calculation.

1.2.1 Hydraulic Design

The systems shall be hydraulically designed to discharge a minimum density of 0.10 gpm per square foot over the hydraulically most demanding 3,000 square feet of floor area. Individual rooms within the design area having higher design densities as otherwise indicated on the fire protections drawings shall be appropriately accounted for in the hydraulic calculations. The minimum pipe size for branch lines in gridded systems shall be 1-1/4 inch. Hydraulic calculations shall be in accordance with the Area/Density Method of NFPA 13.

1.2.1.1 Hose Demand

An allowance for exterior hose streams of 250 gpm shall be added to the sprinkler system demand at the point of connection to the existing system for the alteration. An allowance for interior hose stations is not required.

1.2.1.2 Basis for Calculations

The available water supply has a static pressure of 67 psig; and a flow of 1186 gpm at a residual pressure of 52 psig (per tests conducted on October 28, 1994). The Contractor shall be responsible for obtaining current data for the design. Water supply shall be presumed available at the point of connection to existing underground water supply system. Hydraulic calculations shall be based upon the Hazen-Williams formula with a "C" value of 120 for new steel piping, 150 for copper tubing, 140 for new cement-lined ductile-iron piping, and 100 for existing underground piping.

1.2.2 Sprinkler Spacing

Sprinklers shall be uniformly spaced on branch lines. Maximum spacing per sprinkler shall not exceed limits specified in NFPA 13 for light or

ordinary hazard occupancies as indicated on the drawings.

1.3 SUBMITTALS

Government approval is required for submittals with a "GA" designation; submittals having an "FIO" designation are for information only. Submittals related to system configuration, hydraulic calculations, and equipment selection, including manufacturer's catalog data, working drawings, connection drawings, control diagrams and certificates shall be submitted concurrently as a complete package. The package will be reviewed by the U.S. Army Engineer District Fire Protection Engineer. The following shall be submitted in accordance with Section 01300 SUBMITTAL PROCEDURES:

SD-01 Data

Sprinkler System Equipment; GA.

Manufacturer's Catalog Data for each separate piece of equipment proposed for use in the system. Data shall indicate the name of the manufacturer of each item of equipment, with data highlighted to indicate model, size, options, etc. proposed for installation. In addition, a complete equipment list which includes equipment description, model number and quantity shall be provided.

Hydraulic Calculations; GA.

Hydraulic calculations, including a drawing showing hydraulic reference points and pipe segments.

Spare Parts; FIO.

Spare parts data shall be included for each different item of material and equipment specified. The data shall include a complete list of parts and supplies, with current unit prices and source of supply, and a list of parts recommended by the manufacturer to be replaced after 1 year and 3 years of service. A list of special tools and test equipment required for maintenance and testing of the products supplied by the Contractor shall be included.

SD-04 Drawings

Sprinkler System Shop Drawings; GA.

Detail drawings conforming to the requirements established for working plans as prescribed in NFPA 13. Drawings shall include plan and elevation views which establish that the equipment will fit the allotted spaces with clearance for installation and maintenance. Each set of drawings shall include the following:

a. Descriptive index of drawings in the submittal with drawings listed in sequence by drawing number. A legend identifying device symbols, nomenclature, and conventions used.

b. Floor plans drawn to a scale not less than 1/8" = 1'-0" which clearly show locations of sprinklers, risers, pipe hangers, seismic separation assemblies, sway bracing, inspector's test connections, drains, and other applicable details necessary to clearly describe the proposed arrangement. Each type of fitting used and the locations of bushings, reducing couplings, and welded

joints shall be indicated.

c. Actual center-to-center dimensions between sprinklers on branch lines and between branch lines; from end sprinklers to adjacent walls; from walls to branch lines; from sprinkler feed mains, cross-mains and branch lines to finished floor and roof or ceiling. A detail shall show the dimension from the sprinkler and sprinkler deflector to the ceiling in finished areas.

d. Longitudinal and transverse building sections showing typical branch line and cross-main pipe routing as well as elevation of each typical sprinkler above finished floor.

e. Details of each type of riser assembly; pipe hanger; sway bracing for earthquake protection, and restraint of underground water main at point-of-entry into the building, and electrical devices and interconnecting wiring.

As-Built Drawings; GA.

As-built drawings, no later than 14 working days after completion of the Final Tests. The sprinkler system shop drawings shall be updated to reflect as-built conditions after work is completed and shall be on reproducible full-size mylar film.

SD-06 Instructions

Test Procedures; GA.

Proposed test procedures for piping hydrostatic test, testing of alarms, at least 14 days prior to the start of related testing.

SD-07 Schedules

Preliminary Tests; GA.

A schedule of preliminary tests, at least 14 days prior to the proposed start of the tests.

Final Test; GA.

Upon successful completion of tests specified under PRELIMINARY TESTS, written notification shall be given to the Contracting Officer of the date for the final acceptance test. Notification shall be provided at least 14 days prior to the proposed start of the test. Notification shall include a copy of the Contractor's Material & Test Certificates.

SD-08 Statements

Installer Qualifications; GA.

Qualifications of the sprinkler installer.

Submittal Preparer's Qualifications; GA.

The name and documentation of certification of the individual who will prepare the submittals, prior to the submittal of the drawings and hydraulic calculations.

SD-13 Certificates

Contractor's Material & Test Certificates; FIO.

Certificates, as specified in NFPA 13, shall be completed and signed by the Contractor's Representative performing required tests for both underground and aboveground piping.

SD-19 Operation and Maintenance Manuals

Sprinkler System; GA.

Manuals shall be in loose-leaf binder format and grouped by technical sections consisting of manufacturer's standard brochures, schematics, printed instructions, general operating procedures, and safety precautions. The manuals shall list routine maintenance procedures possible breakdowns, and repairs, and troubleshooting guide. This shall include procedures and instructions pertaining to frequency of preventive maintenance, inspection, adjustment, lubrication and cleaning necessary to minimize corrective maintenance and repair.

1.4 HYDRAULIC CALCULATIONS

Hydraulic calculations shall be as outlined in NFPA 13 except that calculations shall be performed by computer using software specifically designed for fire protection system design. Software which uses k-factors for typical branch lines is not acceptable. Calculations shall be taken back to the water supply source unless water supply data is otherwise indicated. Calculations shall substantiate that the design area indicated is the hydraulically most demanding. Water supply curves and system requirements shall be plotted on semi-logarithmic graph paper so as to present a summary of the complete hydraulic calculation. A summary sheet listing sprinklers in the design area and their respective hydraulic reference points, elevations, actual discharge pressures and actual flows shall be provided. Elevations of hydraulic reference points (nodes) shall be indicated. Documentation shall identify each pipe individually and the nodes connected thereto. The diameter, length, flow, velocity, friction loss, number and type fittings, total friction loss in the pipe, equivalent pipe length and Hazen-Williams coefficient shall be indicated for each pipe. For gridded systems, calculations shall show peaking of demand area friction loss to verify that the hydraulically most demanding area is being used. Also for gridded systems, a flow diagram indicating the quantity and direction of flows shall be included. A drawing showing hydraulic reference points (nodes) and pipe designations used in the calculations shall be included and shall be independent of shop drawings.

1.5 SUBMITTAL PREPARER'S QUALIFICATIONS

The sprinkler system submittals, including as-built drawings, shall be prepared by an individual who is either a registered professional engineer or who is certified as a Level III Technician by National Institute for Certification in Engineering Technologies (NICET) in the Automatic Sprinkler System Layout subfield of Fire Protection Engineering Technology in accordance with NICET 1014.

1.6 INSTALLER QUALIFICATIONS

The installer shall be experienced and regularly engaged in the installation of the type and complexity of system included in this project.

A statement prior to submittal of any other data or drawings, that the proposed sprinkler system installer is regularly engaged in the installation of the type and complexity of system included in this project shall be provided. In addition, data identifying the location of at least three systems recently installed by the proposed installer which are comparable to the system specified shall be submitted. Contractor shall certify that each system has performed satisfactorily, in the manner intended, for a period of not less than 6 months.

1.7 REGULATORY REQUIREMENTS

Compliance with referenced NFPA standards is mandatory. This includes advisory provisions listed in the appendices of such standards, as though the word "shall" had been substituted for the word "should" wherever it appears. Applicable material and installation standards referenced in Appendix A of NFPA 13 and NFPA 24 shall be considered mandatory the same as if such referenced standards were specifically listed in this specification. In the event of a conflict between specific provisions of this specification and applicable NFPA standards, this specification shall govern. All requirements that exceed the minimum requirements of NFPA 13 shall be incorporated into the design. Reference to "authority having jurisdiction" shall be interpreted to mean the Contracting Officer.

1.8 DELIVERY AND STORAGE

Equipment placed in storage shall be stored with protection from the weather, humidity and temperature variations, dirt and dust or other contaminants.

PART 2 PRODUCTS

2.1 GENERAL EQUIPMENT REQUIREMENTS

2.1.1 Standard Products

Materials and equipment shall be standard products of a manufacturer regularly engaged in the manufacture of such products and shall essentially duplicate items that have been in satisfactory use for at least 2 years prior to bid opening.

2.1.2 Requirements for Fire Protection Service

Equipment and materials shall have been tested by Underwriters Laboratories, Inc. and listed in UL-04 or approved by Factory Mutual and listed in FM P7825. Where the terms "listed" or "approved" appear in this specification, such shall mean listed in UL-04 or FM P7825.

2.1.3 Nameplates

Major components of equipment shall have the manufacturer's name, address, type or style, model or serial number, and catalog number on a plate permanently affixed to the item of equipment.

2.2 UNDERGROUND PIPING SYSTEMS

2.2.1 Pipe

Piping from a point 6 inches above the floor to a point 5 feet outside the building wall shall be ductile iron with a rated working pressure of 150 psi

conforming to AWWA C151, with cement mortar lining conforming to AWWA C104. Piping more than 5 feet outside the building walls shall comply with Section 02660 WATER LINES.

2.2.2 Fittings and Gaskets

Fittings shall be ductile iron conforming to AWWA C110. Gaskets shall be suitable in design and size for the pipe with which such gaskets are to be used. Gaskets for ductile iron pipe joints shall conform to AWWA C111.

2.3 ABOVEGROUND PIPING SYSTEMS

Aboveground piping shall be steel or copper.

2.3.1 Steel Piping System

2.3.1.1 Steel Pipe

Except as modified herein, steel pipe shall be black or galvanized as permitted by NFPA 13 and shall conform to applicable provisions of ASTM A 795, ASTM A 53, or ASTM A 135. Pipe in which threads or grooves are cut shall be Schedule 40. Pipe shall be marked with the name of the manufacturer, kind of pipe, and ASTM designation.

2.3.1.2 Fittings for Non-Grooved Steel Pipe

Fittings shall be cast iron conforming to ASME B16.4, steel conforming to ASME B16.9 or ASME B16.11, or malleable iron conforming to ASME B16.3. Galvanized fittings shall be used for piping systems or portions of piping systems utilizing galvanized piping. Fittings into which sprinklers, drop nipples or riser nipples (sprigs) are screwed shall be threaded type. Plain-end fittings with mechanical couplings, fittings which use steel gripping devices to bite into the pipe and segmented welded fittings shall not be used.

2.3.1.3 Grooved Mechanical Joints and Fittings

Joints and fittings shall be designed for not less than 175 psi service and shall be the product of the same manufacturer. Fitting and coupling houses shall be malleable iron conforming to ASTM A 47, Grade 32510; ductile iron conforming to ASTM A 536, Grade 65-45-12. Gasket shall be the flush type that fills the entire cavity between the fitting and the pipe. Nuts and bolts shall be heat-treated steel conforming to ASTM A 183 and shall be cadmium plated or zinc electroplated.

2.3.1.4 Flanges

Flanges shall conform to NFPA 13 and ASME B16.1. Gaskets shall be non-asbestos compressed material in accordance with ASME B16.21, 1/16 inch thick, and full face or self-centering flat ring type. Bolts shall be squarehead conforming to ASME B18.2.1 and nuts shall be hexagon type conforming to ASME B18.2.2.

2.3.2 Copper Tube Systems

2.3.2.1 Copper Tube

Copper tube shall conform to ASTM B 88, Types L and M.

2.3.2.2 Copper Fittings

Cast copper alloy pressure fittings shall conform to ASME B16.18 and wrought copper and bronze pressure fittings shall conform to ASME B16.22.

2.3.4 Pipe Hangers

Hangers shall be listed in UL-04 or FM P7825 and of the type suitable for the application, construction, and pipe type and sized involved.

2.3.3 Valves

2.3.3.1 Control Valve and Gate Valve

Manually operated sprinkler control valve and gate valve shall be outside stem and yoke (OS&Y) type and shall be listed in UL-01 or FM P7825.

2.3.3.2 Check Valve

Check valve 2 inches and larger shall be listed in UL-01 or FM P7825. Check valves 4 inches and larger shall be of the swing type with flanged cast iron body and flanged inspection plates, shall have a clear waterway and shall meet the requirements of MSS SP-71, for Type 3 or 4.

2.4 ALARM INITIATING AND SUPERVISORY DEVICES

2.4.1 Sprinkler Pressure (Waterflow) Alarm Switch

Pressure switch shall include a metal housing with a neoprene diaphragm, SPDT snap action switches and a 1/2 inch NPT male pipe thread. The switch shall have a maximum service pressure rating of 175 psi. There shall be two SPDT (Form C) contacts factory adjusted to operate at 4 to 8 psi. The switch shall be capable of being mounted in any position in the sprinkler riser downstream from the double detector check assembly.

2.4.2 Valve Supervisory (Tamper) Switch

Switch shall be suitable for mounting to the type of control valve to be supervised open. The switch shall be tamper resistant and contain one set of SPDT (Form C) contacts arranged to transfer upon removal of the housing cover or closure of the valve of more than two rotations of the valve stem. Switch for use at the exterior PIV shall be suitable for use in outside environment.

2.5 FIRE DEPARTMENT CONNECTION

Fire department connection shall be projecting type with cast brass body, matching wall escutcheon lettered "Auto Spkr" with a chromium plated finish. The connection shall have two inlets with individual self-closing clappers, caps with drip drains and chains. Female inlets shall have 2-1/2 inch diameter American National Fire Hose Connection Screw Threads (NH) per NFPA 1963.

2.6 SPRINKLERS

Sprinklers shall be of the quick response type used in accordance with their listed limitations. Temperature classification shall be ordinary. Sprinklers in high heat areas including attic spaces or in close proximity to unit heaters shall have temperature classification in accordance with

NFPA 13.

2.6.1 Upright Sprinkler

Upright sprinkler shall be chrome-plated or white enamel and shall have a nominal 1/2 inch or 17/32 inch orifice.

2.6.2 Pendent Sprinkler

Pendent sprinkler shall be of the fusible strut or glass bulb type, semi-recessed type with nominal 1/2 inch or 17/32 inch orifice. Pendent sprinklers shall have a polished chrome or white enamel finish.

2.6.3 Sidewall Sprinkler

Sidewall sprinkler shall have a nominal 1/2 inch orifice. Sidewall sprinkler shall have a polished chrome or white enamel finish. Sidewall sprinkler shall be the quick-response type.

2.7 DISINFECTING MATERIALS

2.7.1 Liquid Chlorine

Liquid chlorine shall conform to AWWA B301.

2.7.2 Hypochlorites

Calcium hypochlorite and sodium hypochlorite shall conform to AWWA B300.

2.8 ACCESSORIES

2.8.1 Sprinkler Cabinet

Spare sprinklers shall be provided in accordance with NFPA 13 and shall be packed in a suitable metal or plastic cabinet. Spare sprinklers shall be representative of, and in proportion to, the number of each type and temperature rating of the sprinklers installed. At least one wrench of each type required shall be provided.

2.8.2 Pendent Sprinkler Escutcheon

Escutcheon shall be one-piece metallic type with a depth of less than 3/4 inch and suitable for installation on pendent sprinklers. The escutcheon shall have a factory finish that matches the pendent sprinkler heads.

2.8.3 Pipe Escutcheon

Escutcheon shall be polished chromium-plated zinc alloy, or polished chromium-plated copper alloy. Escutcheons shall be either one-piece or split-pattern, held in place by internal spring tension or set screw.

2.8.4 Sprinkler Guard

Guard shall be a steel wire cage designed to encase the sprinkler and protect it from mechanical damage. Guards shall be provided on sprinklers located as required or permitted by the Contracting Officer.

2.8.5 Identification Sign

Valve identification sign shall be minimum 6 inches wide x 2 inches high with enamel baked finish on minimum 18 gauge steel or 0.024 inch aluminum with red letters on a white background or white letters on red background. Wording of sign shall include, but not be limited to "main drain," "auxiliary drain," "inspector's test," "alarm test," "alarm line," and similar wording as required to identify operational components.

2.9 DOUBLE-CHECK VALVE BACKFLOW PREVENTION ASSEMBLY

Double-check backflow prevention assembly shall comply with ASSE 1015. The assembly shall have a bronze, cast-iron or stainless steel body with flanged ends. The assembly shall include OS&Y shutoff valves on the inlet and outlet, 2-positive-seating check valve for continuous pressure application, and four test cocks. Assemblies shall be rated for working pressure of 175 psi. The maximum pressure loss shall be 6 psi at a flow rate equal to the sprinkler water demand, at the location of the assembly.

PART 3 EXECUTION

3.1 INSTALLATION REQUIREMENTS

The installation shall be in accordance with the applicable provisions of NFPA 13, NFPA 24 and publications referenced therein.

3.2 ABOVEGROUND PIPING INSTALLATION

Piping shall be run straight and bear evenly on hangers and supports.

3.2.1 Protection of Piping Against Earthquake Damage

The system piping shall be protected against damage from earthquakes. Seismic protection of the piping system shall be provided in accordance with NFPA 13 and Appendix A, with the exception that the "Earthquake Zones" map of Appendix A shall not apply to this project. Seismic protection shall include flexible couplings, sway bracing, seismic separation assemblies where piping crosses building seismic separation joints, and other features as required in NFPA 13 for protection of piping against damage from earthquakes. Branch lines shall be equipped with sway braces at the end sprinkler head and at intervals not exceeding 30 ft.

3.2.2 Piping in Exposed Areas

Exposed piping shall be installed so as not to diminish exit access widths, corridors or equipment access. Exposed horizontal piping, including drain piping, shall be installed to provide maximum headroom. Piping shall be factory primed to match the adjacent steel color (white). Piping shall be field painted after installation to match adjacent steel color (white).

3.2.3 Piping in Finished Areas

In areas with suspended or dropped ceilings and in areas with concealed spaces above the ceiling, piping shall be concealed above ceilings. Piping shall be inspected, tested and approved before being concealed. Risers and similar vertical runs of piping in finished areas shall be concealed.

3.2.4 Pendent Sprinklers

Drop nipples to pendent sprinklers shall consist of minimum 1 inch pipe with a reducing coupling into which the sprinkler shall be threaded.

Hangers shall be provided on arm-overs to drop nipples supplying pendent sprinklers when the arm-over exceeds 12 inches. Where sprinklers are installed below suspended or dropped ceilings, drop nipples shall be cut such that sprinkler ceiling plates or escutcheons are of a uniform depth throughout the finished space. The outlet of the reducing coupling shall not extend more than 1 inch below the underside of the ceiling. On pendent sprinklers installed below suspended or dropped ceilings, the distance from the sprinkler deflector to the underside of the ceiling shall not exceed 4 inches.

3.2.4.1 Pendent Sprinkler Locations

Pendent sprinklers in suspended ceilings shall be a minimum of 6 inches from ceiling grid.

3.2.5 Upright Sprinklers

Riser nipples or "sprigs" to upright sprinklers shall contain no fittings between the branch line tee and the reducing coupling at the sprinkler. Riser nipples exceeding 30 inches in length shall be individually supported.

3.2.6 Pipe Joints

Pipe joints shall conform to NFPA 13, except as modified herein. Not more than four threads shall show after joint is made up. Welded joints will be permitted, only if welding operations are performed as required by NFPA 13 at the Contractor's fabrication shop, not at the project construction site. Flanged joints shall be provided where indicated or required by NFPA 13. Grooved pipe and fittings shall be prepared in accordance with the manufacturer's latest published specification according to pipe material, wall thickness and size. Grooved couplings and fittings shall be from the same manufacturer.

3.2.7 Reducers

Reductions in pipe sizes shall be made with one-piece tapered reducing fittings. The use of grooved-end or rubber-gasketed reducing couplings will not be permitted. When standard fittings of the required size are not manufactured, single bushings of the face type will be permitted. Where used, face bushings shall be installed with the outer face flush with the face of the fitting opening being reduced. Bushings shall not be used in elbow fittings, in more than one outlet of a tee, in more than two outlets of a cross, or where the reduction in size is less than 1/2 inch.

3.2.8 Pipe Penetrations

Cutting structural members for passage of pipes or for pipe-hanger fastenings will not be permitted. Pipes that must penetrate concrete or masonry walls or concrete floors shall be core-drilled and provided with pipe sleeves. Each sleeve shall be Schedule 40 galvanized steel, ductile iron or cast iron pipe and shall extend through its respective wall or floor and be cut flush with each wall surface. Sleeves shall provide required clearance between the pipe and the sleeve per NFPA 13. The space between the sleeve and the pipe shall be firmly packed with mineral wool insulation. Where pipes pass through fire walls, fire partitions, or floors, a fire seal shall be placed between the pipe and sleeve in accordance with Section 07270 FIRESTOPPING. In penetrations which are not fire-rated or not a floor penetration, the space between the sleeve and the pipe shall be sealed at both ends with plastic waterproof cement which will

dry to a firm but pliable mass or with a mechanically adjustable segmented elastomer seal.

3.2.9 Escutcheons

Escutcheons shall be provided for pipe penetration of ceilings and walls. Escutcheons shall be securely fastened to the pipe at surfaces through which piping passes.

3.2.10 Inspector's Test Connection

Unless otherwise indicated, test connection shall consist of 1 inch pipe connected to the remote branch line; a test valve located approximately 7 feet above the floor; a smooth bore brass outlet equivalent to the smallest orifice sprinkler used in the system; and a painted metal identification sign affixed to the valve with the words "Inspector's Test." The discharge orifice shall be located outside the building wall directed so as not to cause damage to adjacent construction or landscaping during full flow discharge.

3.2.11 Drains

Main drain piping shall be provided to discharge at a safe point outside the building. Auxiliary drains shall be provided as required by NFPA 13 except that drain valves shall be used where drain plugs are otherwise permitted. Where branch lines terminate at low points and form trapped sections, such branch lines shall be manifolded to a common drain line.

3.2.12 Installation of Fire Department Connection

Connection shall be mounted on the exterior wall approximately 3 feet above finished grade as shown. The piping between the connection and the check valve shall be provided with an automatic drip in accordance with NFPA 13 and arranged to drain to the outside.

3.2.13 Identification Signs

Signs shall be affixed to each control valve, inspector test valve, main drain, auxiliary drain, test valve, and similar valves as appropriate or as required by NFPA 13. Hydraulic design data nameplates shall be permanently affixed to each sprinkler riser as specified in NFPA 13.

3.3 UNDERGROUND PIPING INSTALLATION

The fire protection water main shall be laid, and joints anchored, in accordance with NFPA 24. Minimum depth of cover shall be 5 feet, 6 inches. The supply line shall terminate inside the building with a flanged piece, the bottom of which shall be set not less than 6 inches above the finished floor. A blind flange shall be installed temporarily on top of the flanged piece to prevent the entrance of foreign matter into the supply line. A concrete thrust block shall be provided at the elbow where the pipe turns up toward the floor. In addition, joints shall be anchored in accordance with NFPA 24 using pipe clamps and steel rods from the elbow to the flange above the floor and from the elbow to a pipe clamp in the horizontal run of pipe. Buried steel components shall be provided with a corrosion protective coating in accordance with AWWA C203. Piping more than 5 feet outside the building walls shall meet the requirements of Section 02660 WATER LINES.

3.4 EARTHWORK

Earthwork shall be performed in accordance with applicable provisions of Section 02221 EXCAVATION, FILLING AND BACKFILLING FOR BUILDINGS.

3.5 ELECTRICAL WORK

Alarm signal wiring connected to the building fire alarm control system shall be in accordance with Section 16721 FIRE DETECTION AND ALARM SYSTEM. All wiring for supervisory and alarm circuits shall be #16 AWG solid copper installed in metallic tubing or conduit. Wiring color code shall remain uniform throughout the system.

3.6 STERILIZATION

After system components have been installed and pressure tested, each portion of the completed system shall be sterilized. After pressure tests have been made, the portion to be sterilized shall be thoroughly flushed with water until all entrained dirt and other foreign materials have been removed before introducing chlorinating material. The chlorinating material shall be hypochlorites or liquid chlorine. Water chlorination procedure shall be in accordance with AWWA M20. The chlorinating material shall be fed into the sprinkler piping at a constant rate of 50 parts per million (ppm). A properly adjusted hypochlorite solution injected into the system with a hypochlorinator, or liquid chlorine injected into the system through a solution-fed chlorinator and booster pump, shall be used. Chlorination application shall continue until the entire system is filled. The water shall remain in the system for a minimum of 24 hours. Each valve in the system shall be opened and closed several times to ensure its proper disinfection. Following the 24-hour period, no less than 25 ppm chlorine residual shall remain in the system. The system shall be then flushed with clean water until the residual chlorine is reduced to less than one part per million. Samples of water in properly sterilized containers for bacterial examination will be taken from several system locations which are approved by the Contracting Officer. Samples shall be tested for total coliform organisms (coliform bacteria, fecal coliform, streptococcal, and other bacteria) in accordance with AWWA-01. The testing method shall be either the multiple-tube fermentation technique or the membrane-filter technique. The sterilization shall be repeated until tests indicate the absence of coliform organisms (zero mean coliform density per 100 milliliters) in the samples for at least 2 full days. The system will not be accepted until satisfactory bacteriological results have been obtained.

3.7 FIELD PAINTING AND FINISHING

Field painting and finishing are specified in Section 09900 PAINTING, GENERAL.

3.8 PRELIMINARY TESTS

The system, including the underground water mains, and the aboveground piping and system components, shall be tested to assure that equipment and components function as intended. The underground and aboveground interior piping systems and attached appurtenances subjected to system working pressure shall be tested in accordance with NFPA 13 and NFPA 24. Upon completion of specified tests, the Contractor shall complete certificates as specified in paragraph SUBMITTALS.

3.8.1 Underground Piping

3.8.1.1 Flushing

Underground piping shall be flushed in accordance with NFPA 24. This includes the requirement to flush the lead-in connection to the fire protection system at a flow rate not less that the calculated maximum water demand rate of the system.

3.8.1.2 Hydrostatic Testing

New underground piping shall be hydrostatically tested in accordance with NFPA 24. The allowable leakage shall be measured at the specified test pressure by pumping from a calibrated container. The amount of leakage at the joints shall not exceed 2 quarts per hour per 100 gaskets or joints, regardless of pipe diameter.

3.8.2 Aboveground Piping

3.8.2.1 Hydrostatic Testing

Aboveground piping shall be hydrostatically tested in accordance with NFPA 13 at not less than 200 psi and shall maintain that pressure without loss for 2 hours. There shall be no drop in gauge pressure or visible leakage when the system is subjected to the hydrostatic test. The test pressure shall be read from a gauge located at the low elevation point of the system or portion being tested.

3.8.3 Testing of Alarm Devices

Each alarm switch shall be tested by flowing water through the inspector's test connection. Each water-operated alarm devices shall be tested to verify proper operation.

3.8.4 Main Drain Flow Test

Following flushing of the underground piping, a main drain test shall be made to verify the adequacy of the water supply. Static and residual pressures shall be recorded on the certificate specified in paragraph SUBMITTALS. In addition, a main drain test shall be conducted each time after a main control valve is shut and opened.

3.9 FINAL ACCEPTANCE TEST

A technician employed by the installing Contractor shall be present for the final tests and shall provide a complete demonstration of the operation of the system. This shall include operation of control valves and flowing of inspector's test connections to verify operation of associated waterflow alarm switches. After operation of control valves has been completed, the main drain test shall be repeated to assure that control valves are in the open position. In addition, the representative shall have available copies of as-built drawings and certificates of tests previously conducted. The installation shall not be considered accepted until identified discrepancies have been corrected and test documentation is properly completed and received.

-- End of Section --

SECTION TABLE OF CONTENTS

DIVISION 15 - MECHANICAL

SECTION 15405

PLUMBING, HOSPITAL

08/94

PART 1 GENERAL

1.1 REFERENCES
1.2 GENERAL REQUIREMENTS
1.2.1 Standard Products
1.2.2 Performance Requirements
1.2.2.1 Welding
1.2.2.2 Electrical Work
1.3 SUBMITTALS
1.4 REGULATORY REQUIREMENTS
1.5 PROJECT/SITE CONDITIONS

PART 2 PRODUCTS

2.1 MATERIALS
2.1.1 Pipe Joint Materials
2.1.2 Miscellaneous Materials
2.1.3 Pipe Insulation Material
2.2 PIPE HANGERS, INSERTS, AND SUPPORTS
2.3 VALVES
2.3.1 Wall Hydrants
2.3.2 Yard Hydrants
2.3.3 Relief Valves
2.3.4 Thermostatic Mixing Valves and Cabinets
2.3.4.1 Mixing Valves
2.3.4.2 Cabinets
2.3.4.3 Hardware for Mixing-Valve Cabinets
2.4 FIXTURES
2.4.1 Flushometer Valves
2.4.2 Joint Schedule Fixtures
2.5 WATER METERS
2.6 BACKFLOW PREVENTERS
2.7 DRAINS
2.7.1 Floor and Shower Drains
2.7.1.1 Metallic Shower Pan Drains
2.7.2 Roof Drains and Expansion Joints
2.8 SHOWER PAN
2.8.1 Sheet Copper
2.8.2 Plasticized Chlorinated Polyethylene Shower Pan Material
2.8.3 Nonplasticized Polyvinyl Chloride (PVC) Shower Pan Material
2.9 TRAPS
2.10 WATER HEATERS
2.10.1 Gas Fired Type
2.11 PUMPS
2.11.1 Circulating Pumps

PART 3 EXECUTION

3.1 GENERAL INSTALLATION REQUIREMENTS
3.2 WATER PIPE, FITTINGS, AND CONNECTIONS
3.2.1 Utilities
3.2.2 Cutting and Repairing
3.2.3 Protection to Fixtures, Materials, and Equipment
3.2.4 Mains, Branches, and Runouts
3.2.5 Pipe Drains
3.2.6 Expansion and Contraction of Piping
3.2.7 Commercial-Type Water Hammer Arresters
3.3 JOINTS
3.3.1 Threaded
3.3.2 Unioned and Flanged
3.3.3 Cast Iron Pipe
3.3.4 Copper Tube and Pipe
3.3.5 Dissimilar Pipe Materials
3.4 PIPE SLEEVES AND FLASHING
3.4.1 Sleeve Requirements
3.4.2 Flashing Requirements
3.4.3 Waterproofing
3.4.4 Optional Counterflashing
3.5 FIRE SEAL
3.6 SUPPORTS
3.6.1 Pipe Support and Structural Bracing Seismic Requirements
3.6.2 Pipe Hangers, Inserts, and Supports
3.7 WELDED INSTALLATION
3.8 PIPE CLEANOUTS
3.9 VALVES, OUTLETS, AND DISPENSERS
3.9.1 Thermostatic Mixing Valve and Cabinet
3.10 FIXTURES AND FIXTURE TRIMMINGS
3.10.1 Fixture Connections
3.10.2 Flushometer Valves
3.10.3 Height of Fixture Rims Above Floor
3.10.4 Fixture Support
3.10.4.1 Concrete or Solid Masonry Construction
3.10.4.2 Cellular-Masonry Wall Construction
3.10.4.3 Steel Stud Frame Partitions
3.10.4.4 Wall-Mounted Water Closet Gaskets
3.10.5 Backflow Prevention Devices
3.10.6 Access Panels
3.10.7 Sight Drains
3.10.8 Traps
3.10.9 Shower Pans
3.10.9.1 Metal Shower Pans
3.10.9.2 Nonplasticized Chlorinated Polyethylene Shower Pans
3.10.9.3 Plasticized Polyvinyl Chloride (PVC) Shower Pans
3.11 VIBRATION-ABSORBING FEATURES
3.12 WATER HEATERS AND HOT WATER STORAGE TANKS
3.12.1 Relief Valves
3.12.2 Gas Fired Water Heaters
3.12.3 Storage Water Heaters
3.12.4 Heat Traps
3.12.5 Connections to Water Heaters
3.13 IDENTIFICATION SYSTEMS
3.13.1 Identification Tags
3.13.2 Color Coding
3.14 ESCUTCHEONS
3.15 PAINTING

3.16 TESTS, FLUSHING, AND STERILIZATION
3.16.1 Plumbing System
3.16.1.1 Shower Pans
3.17 DEFECTIVE WORK
3.18 SYSTEM FLUSHING
3.18.1 Operational Test
3.18.2 Sterilization
3.19 FRAMED INSTRUCTIONS

-- End of Section Table of Contents --

SECTION 15405

PLUMBING, HOSPITAL
08/94

PART 1 GENERAL

1.1 REFERENCES

The publications listed below form a part of this specification to the extent referenced. The publications are referred to in the text by basic designation only.

AIR CONDITIONING AND REFRIGERATION INSTITUTE (ARI)

ARI 1010	(1994) Drinking-Fountains and Self-Contained, Mechanically-Refrigerated Drinking-Water Coolers

AMERICAN NATIONAL STANDARDS INSTITUTE (ANSI)

ANSI SAMA Z236.1	(1983) General Purpose Lab for Liquid-in-Glass Thermometers - General Purpose Laboratory Use
ANSI Z21.10.1	(1993) Gas Water Heaters Vol. I Storage Water Heaters with Input Ratings of 75,000 Btu Per Hour or Less
ANSI Z21.10.3	(1993; Z21.10.3) Gas Water Heaters Vol III Storage, with Input Ratings Above 75,000 Btu Per Hour, Circulating and Instantaneous Water Heaters
ANSI Z21.22	(1986; Z21.22a) Relief Valves and Automatic Gas Shutoff Devices for Hot Water Supply Systems

AMERICAN SOCIETY FOR TESTING AND MATERIALS (ASTM)

ASTM A 47	(1990) Ferritic Malleable Iron Castings
ASTM A 53	(1993a) Pipe, Steel, Black and Hot-Dipped, Zinc-Coated Welded and Seamless
ASTM A 74	(1994) Cast Iron Soil Pipe and Fittings
ASTM A 105	(1994) Forgings, Carbon Steel, for Piping Components
ASTM A 193	(1994b) Alloy-Steel and Stainless Steel Bolting Materials for High-Temperature Service
ASTM A 515	(1992) Pressure Vessel Plates, Carbon Steel, for Intermediate- and

	Higher-Temperature Service
ASTM A 516	(1990) Pressure Vessel Plates, Carbon Steel, for Moderate- and Lower-Temperature Service
ASTM A 518	(1992) Corrosion-Resistant High-Silicon Iron Castings
ASTM A 536	(1984; R 1993) Ductile Iron Castings
ASTM A 733	(1993) Welded and Seamless Carbon Steel and Austenitic Stainless Steel Pipe Nipples
ASTM A 888	(1994) Hubless Cast Iron Soil Pipe and Fittings for Sanitary and Storm Drain, Waste and Vent Piping Applications
ASTM B 32	(1993) Solder Metal
ASTM B 42	(1993) Seamless Copper Pipe, Standard Sizes
ASTM B 43	(1991) Seamless Red Brass Pipe, Standard Sizes
ASTM B 75	(1993) Seamless Copper Tube
ASTM B 88	(1993a) Seamless Copper Water Tube
ASTM B 152	(1993a) Copper Sheet, Strip, Plate, and Rolled Bar
ASTM B 306	(1992) Copper Drainage Tube (DWV)
ASTM B 370	(1992) Copper Sheet and Strip for Building Construction
ASTM B 584	(1993b) Copper Alloy Sand Castings for General Applications
ASTM B 641	(1993) Seamless and Welded Copper Distribution Tube (Type D)
ASTM B 813	(1993) Liquid and Paste Fluxes for Soldering Applications of Copper and Copper Alloy Tube
ASTM C 564	(1993) Rubber Gaskets for Cast Iron Soil Pipe and Fittings
ASTM C 920	(1987) Elastomeric Joint Sealants
ASTM D 638	(1994b) Tensile Properties of Plastics
ASTM D 1004	(1994a) Initial Tear Resistance of Plastic Film and Sheeting
ASTM D 1248	(1984; R 1989) Polyethylene Plastics Molding and Extrusion Materials

ASTM D 2000	(1990) Rubber Products in Automotive Applications
ASTM D 2822	(1991) Asphalt Roof Cement
ASTM D 2996	(1988) Filament-Wound "Fiberglass" (Glass-Fiber-Reinforced Thermosetting-Resin) Pipe
ASTM D 3308	(1991a) PTFE Resin Skived Tape
ASTM E 96	(1994) Water Vapor Transmission of Materials
ASTM F 409	(1993) Thermoplastic Accessible and Replaceable Plastic Tube and Tubular Fittings

AMERICAN SOCIETY OF HEATING, REFRIGERATING AND AIR-CONDITIONING ENGINEERS (ASHRAE)

ASHRAE 90.1	(1989; 90.1b; 90.1c; 90.1d; 90.1e; 90.1g; 90.1i) Energy Efficient Design of New Buildings Except Low-Rise Residential Buildings

AMERICAN SOCIETY OF MECHANICAL ENGINEERS (ASME)

ASME A112.1.2	(1991) Air Gaps in Plumbing Systems
ASME A112.6.1M	(1988) Supports for Off-the-Floor Plumbing Fixtures for Public Use
ASME A112.14.1	(1975; R 1990) Backwater Valves
ASME A112.18.1M	(1994; Errata Feb 1995) Plumbing Fixture Fittings
ASME A112.19.2M	(1990) Vitreous China Plumbing Fixtures
ASME A112.21.1M	(1991) Floor Drains
ASME A112.21.2M	(1983) Roof Drains
ASME A112.36.2M	(1991) Cleanouts
ASME B1.20.1	(1983; R 1992) Pipe Threads, General Purpose (Inch)
ASME B16.3	(1992) Malleable Iron Threaded Fittings
ASME B16.4	(1992) Cast Iron Threaded Fittings
ASME B16.5	(1988; Errata Oct 88; B16.5a) Pipe Flanges and Flanged Fittings
ASME B16.12	(1991) Cast Iron Threaded Drainage Fittings

ASME B16.15	(1985) Cast Bronze Threaded Fittings Classes 125 and 250
ASME B16.18	(1984) Cast Copper Alloy Solder Joint Pressure Fittings
ASME B16.21	(1992) Nonmetallic Flat Gaskets for Pipe Flanges
ASME B16.22	(1989) Wrought Copper and Copper Alloy Solder Joint Pressure Fittings
ASME B16.23	(1992; Errata Jan 1994) Cast Copper Alloy Solder Joint Drainage Fittings - DWV
ASME B16.24	(1991; Errata Jun 91) Cast Copper Alloy Pipe Flanges, Class 150, 300, 400, 600, 900, 1500 and 2500, and Flanged Fittings, Class 150 and 300
ASME B16.29	(1986) Wrought Copper and Wrought Copper Alloy Solder Joint Drainage Fittings - DWV
ASME B16.39	(1986) Malleable Iron Threaded Pipe Unions Classes 150, 250, and 300
ASME B31.1	(1992; B31.1a; B31.1b; B31.1c) Power Piping
ASME B31.5	(1992; B31.5a) Refrigeration Piping
ASME B40.1	(1991) Gauges - Pressure Indicating Dial Type - Elastic Element
ASME BPV IV	(1992; Addenda Dec 1992, Dec 1993, Dec 1994) Boiler and Pressure Vessel Code; Section IV, Heating Boilers
ASME BPV IX	(1992; Addenda Dec 1992, Dec 1993, Dec 1994) Boiler and Pressure Vessel Code; Section IX, Welding and Brazing Qualifications
ASME CSD-1	(1992; CSD-1a; CSD-1b) Controls and Safety Devices for Automatically Fired Boilers

AMERICAN SOCIETY OF SANITARY ENGINEERING (ASSE)

ASSE 1001	(1990) Pipe Applied Atmospheric Type Vacuum Breakers
ASSE 1003	(1981) Water Pressure Reducing Valves for Domestic Water Supply Systems
ASSE 1005	(1993) Water Heater Drain Valves - 3/4-Inch Iron Pipe Size
ASSE 1011	(1993) Hose Connection Vacuum Breakers
ASSE 1012	(1993) Backflow Preventers with

	Intermediate Atmospheric Vent
ASSE 1013	(1993) Reduced Pressure Principle Backflow Preventers
ASSE 1018	(1986) Trap Seal Primer Valves Water Supply Fed
ASSE 1037	(1990) Pressurized Flushing Devices (Flushometers) for Plumbing Fixtures

AMERICAN WATER WORKS ASSOCIATION (AWWA)

AWWA-01	(1992) Standard Methods for the Examination of Water and Wastewater
AWWA B300	(1992) Hypochlorites
AWWA B301	(1992) Liquid Chlorine
AWWA C105	(1988) Polyethylene Encasement for Ductile-Iron Piping for Water and Other Liquids
AWWA C203	(1991) Coal-Tar Protective Coatings and Linings for Steel Water Pipelines - Enamel and Tape - Hot-Applied
AWWA C606	(1987) Grooved and Shouldered Joints
AWWA M20	(1973) Manual: Water Chlorination Principles and Practices

AMERICAN WELDING SOCIETY (AWS)

AWS A5.8	(1992) Filler Metals for Brazing and Braze Welding

CAST IRON SOIL PIPE INSTITUTE (CISPI)

CISPI 301	(1990) Hubless Cast Iron Soil Pipe and Fittings for Sanitary and Storm Drain, Waste, and Vent Piping Applications
CISPI HSN	(1985) Neoprene Rubber Gaskets for Hub and Spigot Cast Iron Soil Pipe and Fittings

CODE OF FEDERAL REGULATIONS (CFR)

10 CFR 430	Energy Conservation Program for Consumer Products

COMMERCIAL ITEM DESCRIPTIONS (CID)

CID A-A-238	(Rev B) Seat, Water Closet

COPPER DEVELOPMENT ASSOCIATION (CDA)

CDA 404/0-RR	(1992) Copper Tube for Plumbing, Heating,

Air Conditioning and Refrigeration

COUNCIL OF AMERICAN BUILDING OFFICIALS (CABO)

CABO A117.1	(1992; Errata Jun 1993) American National Standard for Accessible and Usable, Buildings and Facilities

FEDERAL SPECIFICATIONS (FS)

FS TT-P-1536	(Rev A) Plumbing Fixture Setting Compound
FS WW-C-440	(Rev B; Am 2) Clamps, Hose, (Low-Pressure)
FS WW-U-516	(Rev B; Notice 1) Unions, Brass or Bronze, Threaded Pipe Connections and Solder-Joint Tube Connections
FS WW-V-35	(Rev C) Valve, Ball

FOUNDATION FOR CROSS-CONNECTION CONTROL AND HYDRAULIC RESEARCH (FCCHR)

FCCHR-01	(1993) Manual of Cross-Connection Control

HYDRAULIC INSTITUTE (HI)

HI-01	(1983) Standards for Centrifugal, Rotary & Reciprocating Pumps

MANUFACTURERS STANDARDIZATION SOCIETY OF THE VALVE AND FITTINGS INDUSTRY (MSS)

MSS SP-25	(1993) Standard Marking System for Valves, Fittings, Flanges and Unions
MSS SP-44	(1991) Steel Pipe Line Flanges
MSS SP-58	(1993) Pipe Hangers and Supports - Materials, Design and Manufacture
MSS SP-69	(1991) Pipe Hangers and Supports - Selection and Application
MSS SP-70	(1990) Cast Iron Gate Valves, Flanged and Threaded Ends
MSS SP-71	(1990) Cast Iron Swing Check Valves, Flanged and Threaded Ends
MSS SP-72	(1992) Ball Valves with Flanged or Butt-welding Ends for General Service
MSS SP-73	(1991) Brazing Joints for Copper and Copper Alloy Pressure Fittings
MSS SP-78	(1987; R 1992) Cast Iron Plug Valves, Flanged and Threaded Ends

MSS SP-80	(1987) Bronze Gate, Globe, Angle and Check Valves
MSS SP-83	(1987) Steel Pipe Unions Socket-Welding and Threaded
MSS SP-84	(1990) Valves - Socket Welding and Threaded Ends
MSS SP-85	(1994) Cast Iron Globe & Angle Valves Flanged and Threaded Ends

MILITARY STANDARDS (MIL-STD)

MIL-STD 1691	(Rev E) Construction and Material Schedule for Military Medical and Dental Facilities

NATIONAL ASSOCIATION OF PLUMBING-HEATING-COOLING CONTRACTORS (NAPHCC)

NAPHCC-01	(1993; Supple 1994) National Standard Plumbing Code (Non-Illustrated Edition)
NAPHCC-02	(1993) National Standard Plumbing Code (Illustrated Edition)

NATIONAL ELECTRICAL MANUFACTURERS ASSOCIATION (NEMA)

NEMA 250	(1991) Enclosures for Electrical Equipment (1000 Volts Maximum)

NATIONAL FIRE PROTECTION ASSOCIATION (NFPA)

NFPA 54	(1992) National Fuel Gas Code
NFPA 90A	(1993) Installation of Air Conditioning and Ventilating Systems

PLUMBING AND DRAINAGE INSTITUTE (PDI)

PDI WH 201	(1992) Water Hammer Arresters

1.2 GENERAL REQUIREMENTS

1.2.1 Standard Products

Specified materials and equipment shall be standard items of a manufacturer regularly engaged in the manufacture of such products. Specified equipment shall essentially duplicate equipment that has performed satisfactorily at least 2 years prior to bid opening.

1.2.2 Performance Requirements

1.2.2.1 Welding

Piping shall be welded in accordance with qualified procedures using performance-qualified welders and welding operators. Procedures and

welders shall be qualified in accordance with ASME BPV IX. Welding procedures qualified by others, and welders and welding operators qualified by another employer, may be accepted as permitted by ASME B31.1. The Contracting Officer shall be notified 24 hours in advance of tests, and the tests shall be performed at the work site if practicable. Welders or welding operators shall apply their assigned symbols near each weld they make as a permanent record.

1.2.2.2 Electrical Work

Motors, motor controllers and motor efficiencies shall conform to the applicable requirements of Section 16415 ELECTRICAL WORK, INTERIOR. Electric motor-driven equipment specified herein shall be provided complete with motors. Equipment shall be rated at 60 Hz, single phase, ac unless otherwise indicated. Motors shall be open, dripproof type unless otherwise indicated. Where a motor controller is not provided in a motor-control center on the electrical drawings, a motor controller shall be provided with the mechanical equipment. Electrical characteristics shall be as indicated. Motor controllers shall be provided complete with properly sized thermal-overload protection in each ungrounded conductor, auxiliary contact, and other equipment at the specified capacity including an allowable service factor, and other appurtenances necessary for the motor control specified. Manual or automatic control and protective or signal devices required for operation herein specified and any wiring required to such devices not shown on the electrical drawings shall be provided under this section. Complete electrical schematic lineless or full line interconnection and connection diagram for each piece of mechanical equipment having more than one automatic or manual electrical control device shall be submitted for approval. Manual or automatic control and protective or signal devices required for operation herein specified and any wiring required to such devices not shown on the electrical drawings shall be provided under this section.

1.3 SUBMITTALS

Government approval is required for submittals with a "GA" designation; submittals having an "FIO" designation are for information only. The following shall be submitted in accordance with Section 01300 SUBMITTAL PROCEDURES:

SD-01 Data

Welding; FIO.

A copy of qualified procedures and a list of names and identification symbols of qualified welders and welding operators.

Vibration-Absorbing Features; FIO.

Details of vibration-absorbing features, including arrangement, foundation plan, dimensions and specifications.

SD-04 Drawings

Electrical Schematics; FIO.

Complete electrical schematic lineless or full line interconnection and connection diagrams for each piece of mechanical equipment having more than one automatic or manual electrical control device.

Plumbing System; GA.

Detail drawings consisting of illustrations, schedules, performance charts, instructions, brochures, diagrams, and other information to illustrate the requirements and operation of each system. Detail drawings for the complete plumbing system including piping layout and location of connections; dimensions for roughing-in, foundation, and support points; schematic diagrams; and wiring diagrams or connection and interconnection diagrams. Detail drawings shall indicate clearances required for maintenance and operation. Where piping and equipment are to be supported other than as indicated, details shall include loadings and proposed support method. All mechanical drawing plans, elevations, views, and details, shall be drawn to scale.

SD-06 Instructions

Framed Instructions; FIO.

Diagrams, instructions, and other sheets, prior to posting. Manufacturer's recommendations for the installation of bell and spigot and hubless joints for cast iron soil pipe.

SD-09 Reports

Tests; GA.

Test reports in booklet form showing field tests performed to adjust each component and field tests performed to prove compliance with the specified performance criteria, upon completion and testing of the installed system. Each test report shall indicate the final position of controls.

SD-13 Certificates

Materials and Equipment; FIO.

Where materials or equipment are specified to comply with requirements of AGA, or ASME, proof of such compliance shall be included. The label or listing of the specified agency will be acceptable evidence. In lieu of the label or listing, a written certificate may be submitted from an approved, nationally recognized testing organization equipped to perform such services, stating that the items have been tested and conform to the requirements and testing methods of the specified agency. Where equipment is specified to conform to ASME requirements, the design, fabrication, and installation shall conform to the code.

Bolts; FIO.

Written certification from the bolt manufacturer that the bolts furnished comply with specified requirements. The certification shall include illustrations of product-required markings, date of manufacture, and number of each type of bolt to be furnished based on this certification.

SD-19 Operation and Maintenance Manuals

Plumbing System; FIO.

Six copies of the operation manual outlining the step-by-step procedures required for system startup, operation and shutdown. The manual shall

include the manufacturer's name, model number, service manual, parts list, and brief description of all equipment and their basic operating features.

Six copies of the maintenance manual listing routine maintenance procedures, possible breakdowns and repairs. The manual shall include piping and equipment layout and simplified wiring and control diagrams of the system as installed.

1.4 REGULATORY REQUIREMENTS

Plumbing work shall be in accordance with NAPHCC-01, unless otherwise stated and installed in accordance with NAPHCC-02.

1.5 PROJECT/SITE CONDITIONS

The Contractor shall become familiar with details of the work, verify dimensions in the field, and advise the Contracting Officer of any discrepancy before performing any work.

PART 2 PRODUCTS

2.1 MATERIALS

Materials for various services shall be in accordance with TABLES I and II.

Pipe fittings shall be compatible with the applicable pipe materials. Pipe threads (except dry seal) shall conform to ASME B1.20.1. Material or equipment containing lead shall not be used in any potable water system. Hubless cast-iron soil pipe shall not be installed under concrete floor slabs or in crawl spaces below kitchen floors.

2.1.1 Pipe Joint Materials

Joint and gasket materials shall conform to the following:

a. Coupling for Hubless Cast-Iron Pipe: ASTM A 74, AWWA C606.

b. Coupling for Steel Pipe: AWWA C606.

c. Flange Gaskets: Gaskets shall be made of non-asbestos material in accordance with ASME B16.21. Gaskets shall be flat, 1/16 inch thick, and contain aramid fibers bonded with Styrene Butadiene Rubber (SBR) or Nitro Butadiene Rubber (NBR). Gaskets shall be full face or self centering flat ring type. Gaskets used for hydrocarbon service shall be bonded with NBR.

d. Neoprene Gaskets for Hub and Spigot Cast-Iron Pipe and Fittings: CISPI HSN.

e. Brazing Material: Brazing material shall conform to AWS A5.8, BCup-5.

f. Brazing Flux: Flux shall be in paste or liquid form, be appropriate for use with brazing material, be lead free, have a 100 percent flushable residue, contain slightly acidic reagents, contain potassium bromides, and contain fluorides.

g. Solder Material: Solder metal shall conform to ASTM B 32, 95-5 tin-antimony.

h. Solder Flux: Flux shall be liquid form, non-corrosive, and shall

conform to ASTM B 813, Standard Test 1.

i. Polytetrafluoroethylene Tape, for use with Threaded Metal and Distilled Water-Piping: ASTM D 3308.

j. Rubber Gaskets for Cast-Iron Soil Pipe and Fittings: ASTM C 564.

k. Rubber Gaskets for Grooved Pipe: ASTM D 2000, maximum temperature 230 degrees F.

l. Flanged Fittings: Flanged fittings including flanges, bolts, nuts, bolt patterns, etc. shall be in accordance with ASME B16.5 Class 150 and shall have the manufacturers trademark affixed in accordance with MSS SP-25. Flange material shall conform to ASTM A 105. Blind flange material shall conform to ASTM A 516 cold service and ASTM A 515 for hot service. Bolts shall be high strength or intermediate strength with material conforming to ASTM A 193.

2.1.2 Miscellaneous Materials

Miscellaneous materials shall conform to the following:

a. Water Hammer Arresters: PDI WH 201.

b. Copper, Sheet and Strip for Building Construction: ASTM B 370.

c. Asphalt Roof Cement: ASTM D 2822.

d. Hose Clamps: FS WW-C-440.

e. Supports for Off-The-Floor Plumbing Fixtures: ASME A112.6.1M.

f. Metallic Cleanouts: ASME A112.36.2M.

g. Plumbing Fixture Setting Compound: FS TT-P-1536, Type II.

h. Coal-Tar Protective Coating and Linings for Steel Water Pipelines: AWWA C203.

i. Hypochlorites: AWWA B300.

j. Liquid Chlorine: AWWA B301.

k. Polyethylene Encasement for Ductile Iron Piping: AWWA C105.

l. Gauges - Pressure and Vacuum Indicating Dial Type-Elastic Element: ASME B40.1.

m. Thermometers: ANSI SAMA Z236.1.

2.1.3 Pipe Insulation Material

Insulation shall be as specified in Section 15250 THERMAL INSULATION FOR MECHANICAL SYSTEMS.

2.2 PIPE HANGERS, INSERTS, AND SUPPORTS

Pipe hangers, inserts, and supports shall conform to MSS SP-58 and MSS SP-69.

2.3 VALVES

Valves shall be provided on supplies to equipment and fixtures. Valves shall be gate valves, unless otherwise specified or indicated. Valves 2-1/2 inches and smaller shall be bronze, with threaded bodies for pipe and solder-type connections for tubing. Valves 3 inches and larger shall have flanged iron bodies and bronze trim. Pressure ratings shall be based upon the application. Grooved end valves may be provided if the manufacturer certifies that the valves meet the performance requirements of applicable MSS standard. Valves shall conform to the following standards:

Description	Standard
Cast-Iron Gate Valves, Flanged and Threaded Ends	MSS SP-70
Cast-Iron Swing Check Valves, Flanged and Threaded Ends	MSS SP-71
Ball Valves with Flanged or Butt-Welding Ends for General Service	MSS SP-72
Ball Valves	FS WW-V-35
Cast-Iron Plug Valves, Flanged and Threaded Ends	MSS SP-78
Bronze Gate, Globe, Angle, and Check Valves	MSS SP-80
Steel Valves-Socket Welding and Threaded Ends	MSS SP-84
Cast-Iron Globe and Angle Valves, Flanged and Threaded Ends	MSS SP-85
Backwater Valves	ASME A112.14.1
Vacuum Relief Valves	ASSE 1001
Water Pressure Reducing Valves	ASSE 1003
Water Heater Drain Valves	ASSE 1005
Trap Seal Primer Valves	ASSE 1018
Temperature and Pressure Relief Valves for Hot Water Supply Systems	ANSI Z21.22, and ASME BPV IV
Temperature and Pressure Relief Valves for Automatically Fired Hot Water Boilers	ASME CSD-1, Part CW, Article 5

Description	Standard

2.3.1 Wall Hydrants

Wall hydrants with vacuum breaker backflow preventer shall have a nickel-brass or nickel-bronze wall plate or flange with nozzle and detachable key handle. A brass or bronze operating rod shall be provided within a galvanized iron casing of sufficient length to extend through wall so that the valve is inside the building, and the portion of the hydrant between the outlet and valve is self-draining. A brass or bronze valve with coupling and union elbow having metal-to-metal seat shall be provided. Valve rod and seat washer shall be removeable through the face of the hydrant. The hydrant shall have 3/4 inch exposed hose thread on spout and 3/4 inch male pipe thread on inlet.

2.3.2 Yard Hydrants

Yard box shall have valve housings located below frost lines. Water from the casing shall be drained after valve is shut off. Hydrant shall be bronze with cast-iron box or casing guard. "T" handle key shall be provided.

2.3.3 Relief Valves

Water heaters and hot water storage tanks shall have a combination pressure and temperature (P&T) relief valve. The pressure relief element of a P&T relief valve shall have adequate capacity to prevent excessive pressure buildup in the system when the system is operating at the maximum rate of heat input. The temperature element of a P&T relief valve shall have a relieving capacity which is at least equal to the total input of the heaters when operating at their maximum capacity. Relief valves shall be rated according to ANSI Z21.22, have 3/4 inch minimum inlets, and 3/4 inch outlets for systems where the maximum rate of heat input is less than 200,000 Btuh. Relief valves rated according to ASME BPV IV, or ASME CSD-1, shall have 1 inch minimum inlets, and 1 inch outlets for systems where the maximum rate of heat input is greater than 200,000 Btuh. The discharge pipe from the (P&T) valve shall be the size of the valve outlet.

2.3.4 Thermostatic Mixing Valves and Cabinets

2.3.4.1 Mixing Valves

Mixing valves, thermostatic type, shall be line size and shall be constructed with rough or finish bodies either with or without plating. Each valve shall be constructed to control the mixing of hot and cold water and to deliver water at a desired temperature regardless of pressure or input temperature changes. The control element shall be of an approved type. The body shall be of heavy cast bronze, and interior parts shall be brass, bronze, or copper. The valve shall be equipped with necessary stops, check valves, unions, and sediment strainers on the inlets. Outlets shall have volume control/shutoff. Mixing valves shall maintain water temperature within 5 degrees F of any setting.

2.3.4.2 Cabinets

Cabinets for mixing valves shall be constructed of 16 gauge minimum sheet metal of a size to accommodate the equipment to be installed therein, shall

be rigidly assembled with joints welded, and shall be punched or drilled for the passage of required pipes and services. Cabinets shall be exposed, surface mounted. Keyed locks on cabinets located in neuropsychiatric wards shall be provided. Other cabinets shall be equipped with friction catch and pull. Doors and cabinets shall be constructed of 16 gauge 304 stainless steel.

2.3.4.3 Hardware for Mixing-Valve Cabinets

Each door of cabinets shall have a chromium-plated brass continuous hinge and shall have an approved friction catch and chromium-plated knob pull.

2.4 FIXTURES

Fixtures shall be water conservation type, in accordance with NAPHCC-01 and installed in accordance with NAPHCC-02. Fixtures for use by the physically handicapped shall be in accordance with CABO A117.1. Vitreous china, nonabsorbent, hard-burned, and vitrified throughout the body shall be provided. Porcelain enameled ware shall have specially selected, clear white, acid-resisting enamel coating evenly applied on surfaces. No fixture will be accepted that shows cracks, crazes, blisters, thin spots, or other flaws. Fixtures shall be equipped with appurtenances such as traps, faucets, stop valves, and drain fittings. Each fixture and piece of equipment requiring connections to the drainage system, except grease interceptors, shall be equipped with a trap. Brass expansion or toggle bolts capped with acorn nuts shall be provided for supports. Pipe, valves, and fittings exposed to view shall be chromium plated. Fixtures and trim not covered by MIL-STD 1691 shall be considered special, but shall be of equal quality and material. Fixtures with the supply discharge below the rim shall be equipped with backflow preventers. Internal parts of flush and/or flushometer valves, shower mixing valves, shower head face plates, pop-up stoppers of lavatory waste drains, and pop-up stoppers and overflow tees and shoes of bathtub waste drains may contain acetal resin, fluorocarbon, nylon, acrylonitrile-butadiene-styrene (ABS) or other plastic material, if the material has provided satisfactory service under actual commercial or industrial operating conditions for not less than 2 years. Plastic in contact with hot water shall be suitable for 180 degree F water temperature. Plumbing fixtures shall be as listed below. Shower heads, other than emergency showers, shall include a non-removable, tamperproof flow control device which shall limit shower flow to 2.75 gpm when tested in accordance with ASME A112.18.1M.

2.4.1 Flushometer Valves

Flushometer valves shall have a non-hold-open feature with backcheck angle control stop and a vacuum breaker. Flushometer valves shall be large diaphragm type, having a minimum upper chamber inside diameter of not less than 2-5/8 inches at the point where the diaphragm is sealed between the upper and lower chambers. Flushometer valves shall conform to ASSE 1037.

2.4.2 Joint Schedule Fixtures

The following Joint Schedule Numbers (JSN) for plumbing fixture items are as shown in MIL-STD 1691. Description of the fixture may vary from that in MIL-STD 1691.

a. Item R2201. Electric water cooler, wall-mount, with push-button, and shall be stainless steel with two circular bowls. The bowls shall be dual height, one for handicap and the other for

able-body. Each fixture shall be provided with a guarded angle stream nozzle head, self-closing control valve, automatic volume regulator, and loose key stop valve and strainers. The trap and bodies of regulating and control valves shall be concealed. The refrigeration system shall be recessed and deliver 8 gph with 90F ambient air, 80F inlet water and 50F outlet water. Cooler shall conform to ARI 1010 and shall use one of the halogenated hydrocarbons a refrigerant.

b. Item P3450. Self-rimming countertop lavatory with back, 20 by 18 inches oval, shall conform to ASME A112.19.2M. Fixture shall be equipped with combination faucet, elevated gooseneck spout, wrist action handles with 8 inch faucet centers, open drain with perforated grid strainer, "P" trap, and angle or straight stop valves. Flow shall be limited to 0.25 gallon per cycle at a flowing water pressure of 80 psi if a metering device or fitting is used that limits the period of water discharge such as a foot switch or fixture occupancy sensor. If a metering device is not used, the flow shall be limited to 2.5 gpm at a flowing water pressure of 80 psi. Provide insulating kit for handicap protection for exposed piping below sink.

c. Item CS150. Sink, bowl, single, all service; wrist control, gooseneck supply, countertop, nickel stainless steel satin finish, polished rim, sound dampener, 19 by 16 inches, three faucet holes, 6-1/2 inch chrome plated gooseneck spout with aerator. Sink faucet shall be provided with 4 inch wrist handles, and with polished chrome plated drain with 1-1/2 inch brass tailpiece.

d. Item CS230. Sink, double bowl, all service; wrist control, gooseneck supply, countertop, nickel stainless steel satin finish, polished rim, sound dampener, 28 by 16 inches, three faucet holes, 6-1/2 inch chrome plated gooseneck spout with aerator. Sink faucet shall be provided with 4 inch wrist handles, and with polished chrome plated drain with 1-1/2 inch brass tailpiece.

e. Item P3100. Lavatory, clinic, 20 by 18 inches, vitreous china, conform to FS WW-P-541/4A. Fixture shall be equipped with gooseneck spout and wrist control handles, pop-up drain fitting, "P" trap, and angle or straight stop valves.

f. Item P4700. Basin, mop service; molded polyester/fiberglass product, 36 by 24 by 10 inches, built under heat and pressure, resulting in a one-piece, homogeneous product. Service faucet with vacuum breaker, integral stops, adjustable wall brace, pail hook and 3/4 inch hose thread on spout. Body with inlets 8 inch centers to center, four arm handles. Hose, stainless steel hose racket, and mop hanger shall be provided.

g. Item P5040. Shower, single. Shower head shall be chrome plated with 24 inch slide bar, adjusting knob, swivel hanger, 59 in chrome plated hose with rubber liner and clear acrylic soap dish. Mixing valve shall be a temperature and pressure balancing valve with lever handle and screwdriver stops.

h. Item P6350. Sink, service disposal, flushing rim (deep sink); 20 inches wide by 25 inches long by 13-1/2 inches deep; vitreous china with an integral flushing rim and an integral back 4-3/4 inches high; to include faucet with fork brace, 6 inch wrist

control handles, 10-1/4 inches wall to spout outlet, and plain end spout with bucket hood; stainless steel, spring type front; rim guard; and grid drain with 2 inch tailpiece. Steel supporting brackets shall be provided for wall mounted installation, white, with front leveling screw and tee bolt.

i. Item P8150. Urinal wall-hanging, siphon-jet or wash-out with extended shields, shall conform to ASME A112.19.2M. Fixture to meet ADA requirements. Fixture shall be equipped with flushometer valve conforming to ASSE 1037, SPN 2c1.5. Flow shall be limited to 1 gallon per flush at a flowing water pressure of 80 psi.

j. Item P9050. Water closet wall-hanging, siphon-jet, elongated bowl shall conform to ASME A112.19.2M. Seat shall be white with an open face without a cover and with a check hinge. Seat shall conform to CID A-A-238, SPN CEWX. Flushometer valve shall conform to ASSE 1037, SPN 1a3.5. The maximum water use allowed shall be 1.6 gallons per flush. Provide support carrier.

k. Item P9050H. Water closet mounted at handicap height, siphon-jet, elongated bowl shall conform to ASME A112.19.2M. Seat shall be white with an open face without a cover and with a check hinge. Seat shall conform to CID A-A-238, SPN CEWX. Flushometer valve shall conform to ASSE 1037, SPN 1a3.5. The maximum water use allowed shall be 1.6 gallons per flush. Provide support carrier.

l. Item P9180. Lavatory, wheelchair, 20 by 27 inches with appropriate carrier for installation. Lavatory shall be vitreous china, gooseneck supply with wrist control valves. Provide insulating kit for handicap protection for exposed piping below sink.

2.5 WATER METERS

a. General: Register in gallons, except where registration in cubic feet is indicated.

b. Water Meters: AWWA C700, displacement (disc) type, with bronze main case.

2.6 BACKFLOW PREVENTERS

Reduced-pressure principle assemblies, double check valve assemblies, atmospheric (nonpressure) type vacuum breakers, and pressure type vacuum breakers shall be tested, approved, and listed in accordance with FCCHR-01. Backflow preventers with intermediate atmospheric vent shall conform to ASSE 1012. Reduced pressure principle backflow preventers shall conform to ASSE 1013. Hose connection vacuum breakers shall conform to ASSE 1011. Pipe applied atmospheric type vacuum breakers shall conform to ASSE 1001. Air gaps in plumbing systems shall conform to ASME A112.1.2. Provide shut off valves on either side of reduced-pressure back flow preventer.

2.7 DRAINS

2.7.1 Floor and Shower Drains

Floor Drain "A" and shower drains shall consist of a galvanized body, integral seepage pan, and adjustable perforated or slotted chromium-plated bronze, nickel-bronze, or nickel-brass strainer, consisting of grate and

threaded collar. Floor drains shall be cast iron, except where metallic waterproofing membrane is installed. Drains shall be of double drainage pattern for embedding in the floor construction. The seepage pan shall have weep holes or channels for drainage to the drain pipe. The strainer shall be adjustable to floor thickness. A clamping device for attaching flashing or waterproofing membrane to the seepage pan without damaging the flashing or waterproofing membrane shall be provided when required. Drains shall be provided with threaded or caulked connection. In lieu of a caulked joint between the drain outlet and waste pipe, a neoprene rubber gasket conforming to ASTM C 564 may be installed, provided that the drain is specifically designed for the rubber gasket compression type joint. Floor and shower drains shall conform to ASME A112.21.1M.

Floor Drain "B" shall be the same as Floor Drain "A", except it shall have a 3/4 inch recessed strainer.

Floor Drain "C shall be the same as Floor Drain "A", except it shall have a cast iron oval funnel.

2.7.1.1 Metallic Shower Pan Drains

Where metallic shower pan membrane is installed, polyethylene drain with corrosion-resistant screws for securing the clamping device shall be provided. Polyethylene drains shall have fittings to adapt drain-to-waste piping. Polyethylene floor drains shall be constructed of polyethylene conforming to ASTM D 1248. Drains shall have separate cast-iron "P" trap, circular body, seepage pan, and chrome-plated strainer, unless otherwise indicated.

2.7.2 Roof Drains and Expansion Joints

Roof Drain "A" shall conform to ASME A112.21.2M with cast iron dome and integral flange, and shall have a device for making a watertight connection between roofing and flashing; the whole assembly shall be galvanized heavy pattern cast iron. For aggregate surface roofing, the drain shall be provided with a gravel stop. On roofs other than concrete construction, roof drains shall be complete with underdeck clamp, sump receiver, and an extension for the insulation thickness where applicable. A clamping device for attaching flashing or waterproofing membrane to the seepage pan without damaging the flashing or membrane shall be provided when required to suit the building construction. Strainer openings shall have a combined area equal to twice that of the drain outlet. The outlet shall be equipped to make a proper connection to threaded pipe of the same size as the downspout. An expansion joint of proper size to receive the conductor pipe shall be provided. The expansion joint shall consist of a heavy cast-iron housing, brass or bronze sleeve, brass or bronze fastening bolts and nuts, and gaskets or packing. The sleeve shall have a nominal thickness of not less than 0.134 inch. Gaskets and packing shall be close-cell neoprene; O-ring packing shall be close-cell neoprene of 70 durometer. Packing shall be held in place by a packing gland secured with bolts.

Emergency Roof Drain (ERD) shall be the same as Roof Drain "A", except it is an overflow drain with a 2 inch extension above roof.

2.8 SHOWER PAN

Shower pan may be copper or nonmetallic material.

2.8.1 Sheet Copper

Sheet copper shall be 16 ounce weight.

2.8.2 Plasticized Chlorinated Polyethylene Shower Pan Material

Material shall be sheet form. The material shall be 0.040 inch minimum thickness of plasticized polyvinyl chloride or chlorinated polyethylene and shall have the following minimum properties:

a. ASTM D 638:

Ultimate Tensile Strength: 1590 psi
Ultimate Elongation: 530 percent
100 Percent Modulus: 445 psi

b. ASTM D 1004:

Tear Strength: 8 lbs./inch

c. Other Properties:

Specific Gravity: 1.29
Xylene Solvent: Weldable

2.8.3 Nonplasticized Polyvinyl Chloride (PVC) Shower Pan Material

Material shall consist of a plastic waterproofing membrane in sheet form. The material shall be 0.040 inch minimum thickness of nonplasticized PVC and shall have the following minimum properties:

a. ASTM D 638:

Ultimate Tensile Strength: 2600 psi

Ultimate Elongation: 398 percent

100 Percent Modulus: 445 psi

b. ASTM D 1004:

Tear Strength: 300 lbs./inch

c. ASTM E 96:

Permeance: 0.008 Perms

d. Other Properties:

Specific Gravity: 1.29

PVC Solvent: Weldable

Cold Crack: - 53 degrees F

Dimensional stability, 212 degrees F): 2.5 percent

Hardness, Shore A: 89

2.9 TRAPS

Unless otherwise specified, traps shall be plastic in accordance with ASTM F 409 or copper alloy adjustable tube type with slip joint inlet and swivel. Traps shall be without a cleanout. Tubes shall be copper alloy with walls not less than 0.032 inch thick within commercial tolerances, except on the outside of bends where the thickness may be reduced slightly in manufacture by usual commercial methods. Inlets shall have rubber washer and copper alloy nuts for slip joints above the discharge level. Swivel joints shall be below the discharge level and shall be of metal-to-metal or metal-to-plastic type as required for the application. Nuts shall have flats for wrench grip. Outlets shall have internal pipe thread, except that when required for the application, the outlets shall have sockets for solder-joint connections. The depth of the water seal shall be not less than 2 inches. The interior diameter shall be not more than 1/8 inch over or under the nominal size, and interior surfaces shall be reasonably smooth throughout. A plastic or copper-alloy "P" trap assembly consisting of an adjustable "P" trap and threaded trap wall nipple with cast-brass wall flange, shall be provided for lavatories. The assembly shall be a standard manufactured unit and may have a rubber-gasketed swivel joint.

2.10 WATER HEATERS

Water heater types and capacities shall be as indicated. Each primary water heater shall have controls adjustable from 90 to 120 degrees F. Hot water systems utilizing recirculation systems shall be tied into building off-hour controls. The thermal efficiencies and stand by heat losses shall conform to Table III, as determined by ASHRAE 90.1 for each type of water heater specified. The only exception is that storage water heaters and hot water storage tanks having more than 500 gallon storage capacity need not meet the standby loss requirements if the tank surface area is not insulated to R-12.5 and if a standing pilot light is not used.

2.10.1 Gas Fired Type

Gas fired water heaters shall conform to ANSI Z21.10.1 when input is 75,000 Btu per hour or less or ANSI Z21.10.3 for heaters with input greater than 75,000 Btu per hour.

2.11 PUMPS

2.11.1 Circulating Pumps

Domestic hot water circulating pumps shall be electrically driven, single stage, centrifugal, mechanical seals, suitable for the intended service. Pump capacities, efficiencies, motor sizes, speeds, and impeller types shall be as shown. Pump and motor shall be supported by the piping on which it is installed. The shaft shall be one piece, heat-treated, corrosion-resisting steel with impeller and smooth surfaced housing of bronze. Motor shall be totally enclosed, fan-cooled and shall have sufficient horsepower for the service required. Pump shall be hydraulically balanced and shall conform to HI-01. Each pump motor shall be provided with enclosed, across-the-line type, magnetic controller complete in a NEMA 250, Type 1 enclosure with "START-STOP" switch in cover. Fractional horsepower pump motors shall have integral thermal overload protection in accordance with Section 16415 ELECTRICAL WORK, INTERIOR. Guards shall shield exposed moving parts.

PART 3 EXECUTION

3.1 GENERAL INSTALLATION REQUIREMENTS

Hubless cast-iron soil pipe shall be installed under concrete floor slabs. Hubless cast-iron soil pipe shall not be installed in crawl space below kitchen floors. Piping located in air plenums shall conform to NFPA 90A requirements. Plastic pipe shall not be installed in air plenum. The plumbing system shall be installed complete with necessary fixtures, fittings, traps, valves, and accessories. Water and drainage piping shall be extended 5 feet outside the building, unless otherwise indicated. A gate or full port ball valve and drain on the water service line shall be installed inside the building approximately 12 to 18 inches above the floor from point of entry. Piping shall be connected to the exterior service lines or capped or plugged, if the exterior service is not in place. Sewer and water pipes shall be laid in separate trenches, except when otherwise shown. Exterior underground utilities shall be at least 12 inches below the average local frost depth or as indicated on the drawings. If trenches are closed or the pipes are otherwise covered before being connected to the service lines, the location of the end of each plumbing utility shall be marked with a stake or other acceptable means. Valves shall be installed with handle horizontal to or above the valve body.

3.2 WATER PIPE, FITTINGS, AND CONNECTIONS

3.2.1 Utilities

The piping shall be extended to fixtures, outlets, and equipment. The hot water and cold water piping system shall be arranged and installed to permit draining. The supply line to each item of equipment or fixture, except faucets, flushing devices, or other control valves which are supplied with integral stops, shall be equipped with a shutoff valve to enable isolation of the time for repair and maintenance without interfering with operation of other equipment or fixtures. Supply piping to fixtures, faucets, hydrants, shower heads, and flushing devices shall be anchored to prevent movement.

3.2.2 Cutting and Repairing

The work shall be carefully laid out in advance, and unnecessary cutting through construction shall be avoided. Damage to building, piping, wiring, or equipment as a result of cutting shall be repaired by mechanics skilled in the trade involved.

3.2.3 Protection to Fixtures, Materials, and Equipment

Pipe openings shall be closed with caps or plugs during installation. Fixtures and equipment shall be tightly covered and protected against dirt, water, chemicals, and mechanical injury. Upon completion of the work, the fixtures, materials, and equipment shall be thoroughly cleaned, adjusted, and operated. Safety guards shall be provided for exposed rotating equipment.

3.2.4 Mains, Branches, and Runouts

Piping shall be installed as indicated. Pipe shall be accurately cut and worked into place without springing or forcing. Structural portions of the building shall not be weakened. Aboveground piping shall run parallel with the lines of the building, unless otherwise indicated. Branch pipes from

service lines may be taken from top, bottom, or side of main, using crossover fittings required by structural or installation conditions. Supply pipes, valves, and fittings shall be kept a sufficient distance from other work and other services to permit not less than 1/2 inch between finished covering on the different services. Bare and insulated water lines shall not bear directly against building structural elements so as to transmit sound to the structure or prevent flexible movement of the lines. Water pipe shall not be buried in or under floors unless specifically indicated or approved. Buried pipe shall be inspected, tested, and approved before backfilling. Changes in pipe sizes shall be made with reducing fittings. Use of bushings will not be permitted except for use in situations in which standard factory fabricated components are furnished to accommodate specific excepted installation practice. Change in direction shall be made with fittings, except that bending of pipe 4 inches and smaller will be permitted provided a pipe bender is used and wide sweep bends are formed. The center-line radius of bends shall be not less than six diameters of the pipe. Bent pipe showing kinks, wrinkles, flattening, or other malformations will not be acceptable.

3.2.5 Pipe Drains

Pipe drains indicated shall consist of 3/4 inch hose bibb with renewable seat and gate or full port ball valve ahead of hose bibb. At other low points, 3/4 inch brass plugs or caps shall be provided. Disconnection of the supply piping at the fixture is an acceptable drain.

3.2.6 Expansion and Contraction of Piping

Allowance shall be made throughout for expansion and contraction of water pipe. Each hot water and hot water circulation riser shall have expansion loops where indicated and required. Risers shall be securely anchored as required or where indicated to force expansion to loops. Branch connections from risers shall be made with ample swing or offset to avoid undue strain on fittings or short pipe lengths. Horizontal runs of pipe over 50 feet in length shall be anchored to the wall or the supporting construction about midway on the run to force expansion, evenly divided, toward the ends. Sufficient flexibility shall be provided on branch runouts from mains and risers to provide for expansion and contraction of piping. Flexibility shall be provided by installing one or more turns in the line so that piping will spring enough to allow for expansion without straining. If mechanical grooved pipe coupling systems are provided, the deviation from design requirements for expansion and contraction may be allowed pending approval of Contracting Officer.

3.2.7 Commercial-Type Water Hammer Arresters

Commercial-type water hammer arresters, conforming to PDI WH 201, shall be provided on hot and cold water supplies and shall be located as generally indicated, with precise location and sizing per PDI WH 201. Water hammer arresters, where concealed, shall be accessible by means of access doors or removable panels. Vertical capped pipe columns will not be permitted.

3.3 JOINTS

Installation of pipe and fittings shall be made in accordance with the manufacturer's recommendations. Mitering of joints for elbows and notching of straight runs of pipe for tees will not be permitted. Joints shall be made up with fittings of compatible material and made for the specific purpose intended.

3.3.1 Threaded

Threaded joints shall have American Standard taper pipe threads conforming to ASME B1.20.1. Only male pipe threads shall be coated with graphite or with an approved graphite compound, or with an inert filler and oil, or shall have a polytetrafluoroethylene tape applied.

3.3.2 Unioned and Flanged

Unions and flanges shall not be concealed in walls, ceilings, or partitions. Unions shall be used on pipe sizes 2-1/2 inches and smaller; flanges shall be used on pipe sizes 3 inches and larger.

3.3.3 Cast Iron Pipe

Cast iron soil, waste and vent pipe joints shall be bell and spigot compression and hubless gasketed clamped joints installed per the manufacturer's recommendations.

3.3.4 Copper Tube and Pipe

Joints shall be made up with fittings of compatible material and made for the purpose intended. The tube or fittings shall not be annealed when making connections. Connections shall be made with a multiflame torch.

a. Brazed. Brazed joints shall conform to MSS SP-73 and CDA 404/0-RR, made with flux, and are acceptable for all lines sizes.

b. Soldered. Soldered joints shall be made with flux and are only acceptable for lines 2 inches and smaller. Soldered joints shall conform to ASME B31.5 and CDA 404/0-RR.

c. Copper Tube Extracted Joint. An extracted mechanical joint may be made in copper tube. Joint shall be produced with an appropriate tool by drilling a pilot hole and drawing out the tube surface to form a collar having a minimum height of three times the thickness of the tube wall. To prevent the branch tube from being inserted beyond the depth of the extracted joint, dimpled depth stops shall be provided. Branch tube shall be notched for proper penetration into fitting to assure a free flow joint. Extracted joints shall be brazed in accordance with NAPHCC-01 using B-cup series filler metal in accordance with MSS SP-73. Soldered extracted joints will not be permitted.

3.3.5 Dissimilar Pipe Materials

Connections between ferrous and non-ferrous pipe shall be made with dielectric unions, flanges or dielectric waterways. Connecting joints between plastic and metallic pipe shall be made with transition fittings for this specific purpose.

3.4 PIPE SLEEVES AND FLASHING

Pipe sleeves shall be furnished and set in their proper and permanent location.

3.4.1 Sleeve Requirements

Pipes passing through concrete or masonry wall or concrete floors or roofs shall be provided with pipe sleeves fitted into place at the time of construction. Sleeves will not be required for cast-iron soil pipe passing through concrete slab on grade, except where penetrating a membrane waterproof floor. A modular mechanical type sealing assembly with sleeves of proper diameter may be installed in lieu of a waterproofing clamping flange and caulking and sealing of annular space between pipe and sleeve. The seals shall consist of interlocking synthetic rubber links shaped to continuously fill the annular space between the pipe and sleeve with corrosion-protected carbon steel bolts, nuts, and pressure plates. The links shall be loosely assembled with bolts to form a continuous rubber belt around the pipe with a pressure plate under each bolt head and each nut. After the seal assembly is properly positioned in the sleeve, tightening of the bolt shall cause the rubber sealing elements to expand and provide a watertight seal between the pipe and the sleeve. Each seal assembly shall be sized as recommended by the manufacturer to fit the pipe and sleeve involved. Sleeves shall not be installed in structural members, except where indicated or approved. Rectangular and square openings shall be as detailed. Each sleeve shall extend through its respective wall, floor, or roof, and shall be cut flush with each surface, except for special circumstances. Pipe sleeves passing through floors in wet areas such as mechanical equipment rooms, lavatories, kitchens, and other plumbing fixture areas shall extend a minimum of 4 inches above the finished floor. Unless otherwise indicated, sleeves shall be of a size to provide a minimum of 1/4 inch clearances between bare pipe and inside of sleeve or between jacket over insulation and sleeves. Sleeves in bearing walls shall be steel pipe or cast-iron pipe. Sleeves for membrane waterproof floors shall be steel pipe, cast-iron pipe, or plastic pipe. Membrane clamping devices shall be provided on pipe sleeves for waterproof floors. Sleeves in nonbearing walls or ceilings may be steel pipe, cast-iron pipe, galvanized sheet metal with lock-type longitudinal seam, or moisture-resistant fiber or plastic. Plastic sleeves shall not be used in nonbearing fire walls, roofs, or floor/ceilings. Except as otherwise specified, the annular space between pipe and sleeve, or between jacket over insulation and sleeve, shall be sealed as indicated with sealants conforming to ASTM C 920 and with primer backstop material and surface preparation as specified in Section 07920 JOINT SEALING. Pipes passing through sleeves in concrete floors over crawl spaces shall be sealed as specified above. The annular space between pipe and sleeve or between jacket over insulation and sleeve shall not be sealed for interior walls which are not designated as fire rated.

3.4.2 Flashing Requirements

Pipes passing through roof or floor waterproofing membrane shall be installed through a lead flashing or a 16 ounce copper flashing, each within an integral skirt or flange. Flashing shall be suitably formed; the skirt or flange shall extend not less than 8 inches from the pipe, and shall be set over the roof or floor membrane in a solid coating of bituminous cement. The flashing shall extend up the pipe a minimum of 10 inches. For cleanouts, the flashing shall be turned down into the hub and caulked after placing the ferrule. Pipes passing through pitched roofs shall be flashed, using copper flashing, with an adjustable integral flange of adequate size to extend not less than 8 inches from the pipe in all directions and lapped into the roofing to provide a watertight seal. The annular space between flashing and bare pipe or between flashing and metal-jacket covered insulation shall be sealed as indicated. Flashing for dry vents shall be turned down into the pipe to form a waterproof joint. Pipes, up to and including 10 inches in diameter, passing through roof or

floor waterproofing membrane may be installed through a cast iron sleeve with caulking recess, anchor lugs, flashing-clamp device, and pressure ring with brass bolts. Flashing shield shall be fitted into the sleeve clamping device. Pipes passing through wall waterproofing membrane shall be sleeved as described above. A waterproofing clamping flange shall be installed.

3.4.3 Waterproofing

Waterproofing at floor-mounted water closets shall be accomplished by forming a flashing guard from soft-tempered sheet copper. The center of the sheet shall be perforated and turned down approximately 1-1/2 inches to fit between the outside diameter of the drainpipe and the inside diameter of the cast-iron or steel pipe sleeve. The turned down portion of the flashing guard shall be embedded in sealant to a depth of approximately 1-1/2 inches; then the sealant shall be finished off flush to floor level between the flashing guard and drainpipe. The flashing guard of sheet copper shall extend not less than 8 inches from the drainpipe and shall be lapped between the floor membrane in a solid coating of bituminous cement. If cast-iron water closet floor flanges are used, the space between the pipe sleeve and drainpipe shall be sealed with sealant and the flashing guard shall be upturned approximately 1-1/2 inches to fit the outside diameter of the drainpipe and the inside diameter of the water closet floor flange. The upturned portion of the sheet fitted into the floor flange shall be caulked to form a seal.

3.4.4 Optional Counterflashing

Instead of turning the flashing down into a dry vent pipe, or caulking and sealing the annular space between the pipe and flashing or metal-jacket covered insulation and flashing, counterflashing may be accomplished by utilizing the following:

a. A standard roof coupling for threaded pipe up to 6 inches in diameter.

b. A tack-welded or banded-metal rain shield around the pipe.

3.5 FIRE SEAL

Where pipes pass through fire walls, fire partitions, fire rated pipe chase walls or floors above grade, a fire seal shall be provided as specified in Section 07270 FIRESTOPPING.

3.6 SUPPORTS

Hangers used to support piping 2 inches and larger shall be fabricated to permit adequate adjustment after erection while still supporting the load. Pipe guides and anchors shall be installed to keep pipes in accurate alignment, to direct the expansion movement, and to prevent buckling, swaying, and undue strain. Piping subjected to vertical movement when operating temperatures exceed ambient temperatures shall be supported by variable spring hangers and supports or by constant support hangers. In the support of multiple pipe runs on a common base member, a clip or clamp shall be used where each pipe crosses the base support member. Spacing of the base support members shall not exceed the hanger and support spacing required for an individual pipe in the multiple pipe run.

3.6.1 Pipe Support and Structural Bracing Seismic Requirements

Piping and attached valves shall be supported and braced to resist seismic loads as specified in Section 13080. Structural steel required for reinforcement to properly support piping, headers, and equipment but not shown shall be provided. Material used for supports shall be as specified in Section 05120 STRUCTURAL STEEL.

3.6.2 Pipe Hangers, Inserts, and Supports

Pipe hanger, insert and support installation shall conform to MSS SP-58 and MSS SP-69, except as modified herein.

a. Types 5, 12, and 26 shall not be used.

b. Type 3 shall not be used on insulated pipe.

c. Type 18 inserts shall be secured to concrete forms before concrete is placed. Continuous inserts which allow more adjustment may be used if they otherwise meet the requirements for type 18 inserts.

d. Types 19 and 23 C-clamps shall be torqued per MSS SP-69 and have both locknuts and retaining devices, furnished by the manufacturer. Field-fabricated C-clamp bodies or retaining devices are not acceptable.

e. Type 20 attachments used on angles and channels shall be furnished with an added malleable-iron heel plate or adapter.

f. Type 24 may be used only on trapeze hanger systems or on fabricated frames.

g. Type 39 saddles shall be used on insulated pipe 4 inches and larger when the temperature of the medium is 60 degrees F or higher. Type 39 saddles shall be welded to the pipe.

h. Type 40 shields shall:

(1) Be used on insulated pipe less than 4 inches.

(2) Be used on insulated pipe 4 inches and larger when the temperature of the medium is 60 degrees F or less.

(3) Have a high density insert for pipe 2 inches and larger and for smaller pipe sizes when the insulation is suspected of being visibly compressed, or distorted at or near the shield/insulation interface. High-density inserts shall have a density of 9 pcf or greater.

i. Horizontal pipe supports shall be spaced as specified in MSS SP-69 and a support shall be installed not over 1 foot from the pipe fitting joint at each change in direction of the piping. Pipe supports shall be spaced not over 5 feet apart at valves. Horizontal pipe runs shall include allowances for expansion and contraction.

j. Vertical pipe shall be supported at each floor, except at slab-on-grade, and at intervals of not more than 15 feet, nor more than 8 feet from end of risers, and at vent terminations. Vertical pipe risers shall include allowances for expansion and contraction.

k. Type 35 guides using steel, reinforced polytetrafluoroethylene (PTFE) or graphite slides shall be provided to allow longitudinal pipe movement. Slide materials shall be suitable for the system operating temperatures, atmospheric conditions, and bearing loads encountered. Lateral restraints shall be provided as needed. Where steel slides do not require provisions for lateral restraint, the following may be used:

(1) On pipe 4 inches and larger when the temperature of the medium is 60 degrees F or higher, a Type 39 saddle, welded to the pipe, may freely rest on a steel plate.

(2) On pipe less than 4 inches, a Type 40 shield, attached to the pipe or insulation, may freely rest on a steel plate.

(3) On pipe 4 inches and larger carrying medium less than 60 degrees F, a Type 40 shield, attached to the pipe or insulation, may freely rest on steel plate.

l. Pipe hangers on horizontal insulated pipe shall be the size of the outside diameter of the insulation. The insulation shall be continuous through the hanger on all pipe sizes and applications.

m. Where there are high system temperatures and welding to piping is not desirable, the type 35 guide shall include a pipe cradle, welded to the guide structure and strapped securely to the pipe. The pipe shall be separated from the slide material by at least 4 inches, or by an amount adequate for the insulation, whichever is greater.

3.7 WELDED INSTALLATION

Plumbing pipe weldments shall be as indicated. Changes in direction of piping shall be made with welding fittings only; mitering or notching pipe to form elbows and tees or other similar type construction will not be permitted. Branch connection may be made with either welding tees or forged branch outlet fittings. Branch outlet fittings shall be forged, flared, flared for improvement of flow where attached to the run, and reinforced against external strains. Beveling, alignment, heat treatment, and inspection of weld shall conform to ASME B31.1. Weld defects shall be removed and repairs made to the weld, or the weld joints shall be entirely removed and rewelded. After filler metal has been removed from its original package it shall be protected or stored so that its characteristics or welding properties are not affected. Electrodes that have been wetted or that have lost any of their coating shall not be used.

3.8 PIPE CLEANOUTS

Pipe cleanouts shall be the same size as the pipe except that cleanout plugs larger than 4 inches will not be required. A cleanout installed in connection with cast-iron soil pipe shall consist of a long-sweep 1/4 bend or one or two 1/8 bends extended to the place shown. An extra heavy cast-brass or cast-iron ferrule with countersunk cast-brass head screw plug shall be caulked into the hub of the fitting and shall be flush with the floor. Cleanouts in connection with other pipe, where indicated, shall be T-pattern, 90-degree branch drainage fittings with cast brass screw plugs, except plastic plugs shall be installed in plastic pipe. Plugs shall be the same size as the pipe up to and including 4 inches. Cleanout tee

branches with screw plug shall be installed at the foot of soil and waste stacks, at the foot of interior downspouts, on each connection to building storm drain where interior downspouts are indicated, and on each building drain outside the building. Cleanout tee branches may be omitted on stacks in single story buildings with slab-on-grade construction or where less than 18 inches of crawl space is provided under the floor. Pipe cleanouts concealed in partitions shall be provided with chromium-plated bronze, nickel bronze, nickel brass or stainless steel flush type access cover plates. Round access covers shall be provided and secured to plugs with securing screw. Square access covers may be provided with matching frames, anchoring lugs and cover screws. Cleanouts in finished walls shall have access covers and frames installed flush with the finished wall. Cleanouts installed in finished floors subject to foot traffic shall be provided with a chrome-plated cast brass, nickel brass, or nickel bronze cover secured to plug or cover frame and set flush with the finished floor. Heads of fastening screws shall not project above the cover surface. Where cleanouts are provided with adjustable heads, the head cleanouts shall be provided with adjustable cast iron or plastic heads. Cleanouts for areas with carpet shall be the same as for finished floor areas subject to traffic and with a carpet marker.

3.9 VALVES, OUTLETS, AND DISPENSERS

3.9.1 Thermostatic Mixing Valve and Cabinet

The assembly, when not installed in a cabinet, shall be mounted 4 feet 6 inches above the floor. When a cabinet is used, bottom of cabinet shall be set approximately 4 feet above finished floor. Cabinet doors shall not offer any obstruction when opened. Anchors shall be provided for fastening cabinet in place. Valves located in pipe corridors for tempering water for neuropsychiatric patient showers shall have a maximum outlet temperature of 118 degrees F, and valves for neuropsychiatric patient lavatories shall have a maximum outlet temperature of 105 degrees F.

3.10 FIXTURES AND FIXTURE TRIMMINGS

Angle stops, straight stops, stops integral with the faucets, or concealed type of lock-shield, and loose-key pattern stops for supplies with threaded, or sweat inlets shall be furnished and installed with fixtures. Where connections between copper tubing and faucets are made by rubber compression fittings, a beaded tool shall be used to mechanically deform the tubing above the compression fittings. Exposed traps and supply pipes for fixtures and equipment shall be connected to the rough piping systems at the wall, unless otherwise specified under the item. Floor and wall escutcheons shall be as specified. Drain lines and hot water lines of fixtures for handicapped personnel shall be insulated and do not require polished chrome finish. Plumbing fixtures and accessories shall be installed within the space shown. Stops for water closet seats shall be installed on the wall.

3.10.1 Fixture Connections

Where space limitations prohibit standard fittings in conjunction with the cast-iron floor flange, special short-radius fittings shall be provided. Connections between earthenware fixtures and flanges on soil pipe shall be made gastight and watertight with a closet-setting compound or neoprene gasket and seal. Use of natural-rubber gaskets or putty will not be permitted. Fixtures with outlet flanges shall be set the proper distance from floor or wall to make a first-class joint with the closet-setting

compound or gasket and fixture used.

3.10.2 Flushometer Valves

Flushometer valves shall be secured to prevent movement by anchoring the long finish connection to top spud adjacent to valve, to the wall with approved metal bracket.

3.10.3 Height of Fixture Rims Above Floor

Lavatories shall be mounted with rim 31 inches above finished floor. Wall-hung drinking fountains shall be installed with rim 42 inches above floor. Wall-hung service sinks shall be mounted with rim 28 inches above the floor. Installation of fixtures for use by the physically handicapped shall conform to CABO A117.1.

3.10.4 Fixture Support

Fixture supports for off-the-floor lavatories, urinals, water closets, and other fixtures of similar size, design, and use, shall be of the chair carrier type. The carrier shall provide the necessary means of mounting the fixture, with a foot or feet to anchor the assembly to the floor slab. Adjustability shall be provided to locate the fixture at the desired height and in proper relation to the wall. Support plates, in lieu of chair carrier, shall be fastened to the wall structure only where it is not possible to anchor a floor-mounted chair carrier to the floor slab.

3.10.4.1 Concrete or Solid Masonry Construction

Chair carrier shall be anchored to the floor slab. Where a floor-anchored chair carrier cannot be used, a suitable wall plate shall be imbedded in the masonry wall.

3.10.4.2 Cellular-Masonry Wall Construction

Chair carrier shall be anchored to floor slab. Where a floor-anchored chair carrier cannot be used, a suitable wall plate shall be fastened to the cellular wall using through bolts and a back-up plate.

3.10.4.3 Steel Stud Frame Partitions

Chair carriers shall be used. The anchor feet and tubular uprights shall be of the heavy duty design. Feet (bases) shall be steel and welded to a square or rectangular steel tube upright. Wall plates, in lieu of floor-anchored chair carriers, may be used only if adjoining steel partition studs are suitably reinforced to support a wall plate bolted to these studs.

3.10.4.4 Wall-Mounted Water Closet Gaskets

When wall-mounted water closets are provided, reinforced wax, treated felt, or neoprene gaskets shall be provided. The type of gasket furnished shall be as recommended by the chair carrier manufacturer.

3.10.5 Backflow Prevention Devices

Plumbing fixtures, equipment, or pipe connections shall not allow a cross connection or interconnection between a potable water supply and any source of nonpotable water. The backflow prevention device shall be installed

where indicated, and located so that no part of the device will be submerged. Access shall be provided for maintenance and testing. Each device shall be a standard commercial unit.

3.10.6 Access Panels

Access panels shall be provided for concealed valves and controls or any item requiring inspection or maintenance. Access panels shall be of sufficient size and located so that the concealed items may be serviced, maintained, or replaced. Access panels shall be as specified in Section 05500 MISCELLANEOUS METAL.

3.10.7 Sight Drains

Sight drains shall be installed so that the indirect waste will terminate 2 inches above the flood rim of the funnel to provide an acceptable air gap.

3.10.8 Traps

Each trap shall be placed as near the fixture as possible, and no fixture shall be double-trapped. Traps installed on cast iron soil pipe shall be cast iron. Traps installed on steel pipe or copper tubing shall be recess-drainage pattern, or brass-tube type. Traps for acid-resisting waste shall be of the same material as the pipe.

3.10.9 Shower Pans

Before installing shower pan, subfloor shall be free of projections such as nail heads or rough edges of aggregate. Drain shall be a bolt-down, clamping-ring type with weepholes, installed so the lip of the subdrain is flush with subfloor. The floor of each individual shower, the shower area portion of combination shower and drying room, and the entire shower and drying room where the two are not separated by curbing or partition shall be made watertight with a shower pan fabricated in place. The shower pan material shall be cut to size and shape of the area indicated, in one piece to the maximum extent practicable, allowing a minimum of 6 inches for turnup on walls or partitions, and shall be folded over the curb with an approximate return of 1/4 of curb height. The upstands shall be placed behind any wall or partition finish. Subflooring shall be smooth and clean, with nail heads driven flush with surface, and shall be sloped to drain. Shower pans shall be clamped to drain with the drain clamping ring.

3.10.9.1 Metal Shower Pans

When a shower pan of required size cannot be furnished in one piece, metal pieces shall be joined with a flat-lock seam and soldered or burned. The corners shall be folded, not cut, and the corner seam shall be soldered or burned. Pans, including upstands, shall be coated on all surfaces with one brush coat of asphalt. Asphalt shall be applied evenly at not less than 1 gallon per 50 square feet. A layer of felt covered with building paper shall be placed between shower pans and wood floors. The joining surfaces of metal pan and drain shall be given a brush coat of asphalt after the pan is connected to the drain.

3.10.9.2 Nonplasticized Chlorinated Polyethylene Shower Pans

Corners of nonplasticized chlorinated polyethylene shower pans shall be folded against the upstand by making a pig-ear fold. Hot-air gun or heat lamp shall be used in making corner folds. Each pig-ear corner fold shall

be nailed or stapled 1/2 inch from the upper edge to hold it in place. Nails shall be galvanized large-head roofing nails. On metal framing or studs, approved duct tape shall be used to secure pig-ear fold and membrane. Where no backing is provided between the studs, the membrane slack shall be taken up by pleating and stapling or nailing to studding 1/2 inch from upper edge. To adhere the membrane to vertical surfaces, the back of the membrane and the surface to which it will be applied shall be coated with adhesive that becomes dry to the touch in 5 to 10 minutes, after which the membrane shall be pressed into place. Surfaces to be solvent-welded shall be clean. Surfaces to be joined with xylene shall be initially sprayed and vigorously cleaned with a cotton cloth, followed by final coating of xylene and the joining of the surfaces by roller or equivalent means. If ambient or membrane temperatures are below 40 degrees F, the membrane and the joint shall be heated prior to application of xylene. Heat may be applied with hot-air gun or heat lamp, taking precautions not to scorch the membrane. Adequate ventilation and wearing of gloves are required when working with xylene. Membrane shall be pressed into position on the drain body, and shall be cut and fit to match so that membrane can be properly clamped and an effective gasket-type seal provided. On wood subflooring, two layers of 15 pound dry felt shall be installed prior to installation of shower pans to assure a smooth surface for installation.

3.10.9.3 Plasticized Polyvinyl Chloride (PVC) Shower Pans

Plasticized PVC shall be turned up behind walls or wall surfaces a distance of not less than 6 inches in room areas and 3 inches above curb level in curbed spaces with sufficient material to fold over and fasten to outside face of curb. Corners shall be pig-ear type and folded between pan and studs. Only top 1 inch of upstand shall be nailed to hold in place. Nails shall be galvanized large-head roofing type. Approved duct tape shall be used on metal framing or studs to secure pig-ear fold and membrane. Where no backing is provided between studs, the membrane slack shall be taken up by pleating and stapling or nailing to studding at top inch of upstand. To adhere the membrane to vertical surfaces, the back of the membrane and the surface to which it will be applied shall be coated with adhesive that becomes dry to the touch in 5 to 10 minutes, after which the membrane shall be pressed into place. Trim for drain shall be exactly the size of drain opening. Bolt holes shall be pierced to accommodate bolts with a tight fit. Adhesive shall be used between pan and subdrain. Clamping ring shall be bolted firmly. A small amount of gravel or porous material shall be placed at weepholes so that holes remain clear when setting bed is poured. Membrane shall be solvent welded with PVC solvent cement. Surfaces to be solvent welded shall be cleaned free of grease and grime. Sheets shall be laid on a flat surface with an overlap of about 2 inches. Top edge shall be folded back and surface primed with a PVC primer. PVC cement shall be applied and surfaces placed together at once, while still wet. Joint shall be lightly rolled with a paint roller, then as the joint sets shall be rolled firmly but not so hard as to distort the material. On long lengths, about 2 or 3 feet at a time shall be welded. On wood subflooring, two layers of 15 pound felt shall be installed prior to installation of shower pan to assure a smooth surface installation.

3.11 VIBRATION-ABSORBING FEATURES

Mechanical equipment, including compressors and pumps, shall be isolated from the building structure by approved vibration-absorbing features unless otherwise shown. Each foundation shall include standard isolation units as indicated. Each unit shall consist of machine and floor or foundation

fastening, together with intermediate isolation material, and shall be a standard product with printed loading rating. Piping connected to mechanical equipment shall be provided with flexible connectors. Isolation unit installation shall limit vibration to 20 percent of the lowest equipment rpm.

3.12 WATER HEATERS AND HOT WATER STORAGE TANKS

3.12.1 Relief Valves

Valves shall not be installed between a relief valve and its water heater or storage tank. The relief valves shall be installed where the valve actuator comes in contact with the hottest water in the heater or tank. Whenever possible, the valve shall be installed directly in a tapping in the tank or heater. When heaters are not provided with a relief valve tapping, the valve shall be installed in the hot water outlet piping. A vacuum relief valve shall be provided on the cold water supply line to the hot water storage tank or water heater and mounted above and within 6 inches of the tank or water heater.

3.12.2 Gas Fired Water Heaters

Installation shall conform to NFPA 54 for gas fired heaters.

3.12.3 Storage Water Heaters

Storage water heaters that are not equipped with integral heat traps and having vertical pipe risers shall be installed with heat traps directly on both the inlet and outlets. Circulating systems need not have heat traps installed. An acceptable heat trap may be a piping arrangement such as elbows connected so that the inlet and outlet piping make vertically upward runs of not less than 24 inches just before turning downward or directly horizontal into the water heater's inlet and outlet fittings. Commercially available heat traps, specifically designed by the manufacturer for the purpose of effectively restricting the natural tendency of hot water to rise through vertical inlet and outlet piping during standby periods, may also be approved.

3.12.4 Heat Traps

Piping to and from each water heater and hot water storage tank shall be routed horizontally or downward a minimum of 2 feet before turning in an upward direction.

3.12.5 Connections to Water Heaters

Connections to water heaters and metallic pipe shall be made with dielectric unions or flanges.

3.13 IDENTIFICATION SYSTEMS

3.13.1 Identification Tags

Identification tags made of brass, engraved laminated plastic, or engraved anodized aluminum, indicating service and valve number, shall be installed on valves, except those valves installed on supplies at plumbing fixtures. Tags shall be 1-3/8 inch minimum diameter, and marking shall be stamped or engraved. Indentations shall be black, for reading clarity. Tags shall be attached to valves with No. 12 AWG, copper wire, chrome-plated beaded

chain, or plastic straps designed for that purpose.

3.13.2 Color Coding

Color coding for piping identification shall be as specified in Section 09900 PAINTING, GENERAL.

3.14 ESCUTCHEONS

Escutcheons shall be provided to finished surfaces where bare or insulated piping exposed to view passes through floors, walls, or ceilings, except in boiler, utility, or equipment rooms. Escutcheons shall be fastened securely to pipe or pipe covering and shall be satin finish, corrosion-resisting steel, polished chromium-plated zinc alloy, or polished chromium-plated copper alloy. Escutcheons shall be either one piece or split-pattern, held in place by internal spring tension or setscrew.

3.15 PAINTING

Painting of pipes, hangers, supports, and other iron work, in concealed spaces or exposed, is specified in Section 09900 PAINTING, GENERAL.

3.16 TESTS, FLUSHING, AND STERILIZATION

3.16.1 Plumbing System

The plumbing system shall be tested in accordance with NAPHCC-01.

3.16.1.1 Shower Pans

After installation of the pan and finished floor, the drain shall be temporarily plugged below the weep holes. The floor area shall be flooded with water to a minimum depth of 1 inch for a period of 24 hours. Any drop in the water level during test, except for evaporation, shall be reason for rejection, repair, and retest.

3.17 DEFECTIVE WORK

If inspection or test shows defects, such defective work or material shall be replaced or repaired as necessary and inspection and tests shall be repeated. Repairs to piping shall be made with new material. No caulking or screwed joints or holes will be acceptable.

3.18 SYSTEM FLUSHING

After tests are completed, potable water piping shall be flushed. In general, sufficient water shall be used to produce minimum water velocity of 2.5 feet per second through piping being flushed. Flushing shall be continued until discharge water shows no discoloration. System shall be drained at low points. Strainer screens shall be removed, cleaned, and replaced in line. After flushing and cleaning, system shall be prepared for service by immediately filling water piping with clean, fresh potable or high-purity water as applicable to the system being flushed. Any stoppage, discoloration, or other damage to the finish, furnishings, or parts of the building, due to the Contractor's failure to properly clean the piping system, shall be repaired by the Contractor. When the work is complete, the hot-water system shall be adjusted for uniform circulation. Flushing devices and automatic control systems shall be adjusted for proper operation.

3.18.1 Operational Test

Upon completion of and prior to acceptance of the installation, the Contractor shall subject the plumbing system to operating tests to demonstrate satisfactory functional and operational efficiency. Such operating tests shall cover a period of not less than 8 hours for each system and shall include the following information in a report with conclusion as to the adequacy of the system:

a. Time, date, and duration of test.

b. Water pressures at the most remote and the highest fixtures.

c. Operation of each fixture and fixture trim.

d. Operation of each valve, hydrant, and faucet.

e. Pump suction and discharge pressures.

f. Temperature of domestic hot water supply.

g. Operation of each floor and roof drain by flooding with water.

h. Operation of each vacuum breaker and backflow preventer.

i. Complete operation of each water pressure booster system, including pump start pressure and stop pressure.

3.18.2 Sterilization

After pressure tests have been made, the entire domestic hot-and-cold water distribution system to be sterilized shall be flushed with water until entrained dirt and other foreign material have been removed, before introducing chlorinating material. The chlorinating material shall be either liquid chlorine or hypochlorite. Water chlorination procedure shall be in accordance with AWWA M20. The chlorinating material shall be constantly fed into the water piping system at a concentration of at least 50 parts per million (ppm). A properly adjusted hypochlorite solution injected into the main with a hypochlorinator, or liquid chlorine injected into the main through a solution-feed chlorinator and booster pump, shall be used. The chlorine residual shall be checked at intervals to ensure that the proper level is maintained. Chlorine application shall continue until the entire main is filled. The water shall remain in the system for a minimum of 24 hours. Each valve in the system being sterilized shall be opened and closed several times during the contact period to ensure its proper disinfection. Following the 24 hour period, no less than 25 ppm chlorine residual shall remain in the system. Water tanks shall be disinfected by the addition of chlorine directly to the filling water. Following a 6 hour period, no less than 50 ppm chlorine residual shall remain in the tank. The system, including the tanks, shall then be flushed with clean water until the residual chlorine is reduced to less than 1 ppm. During the flushing period each valve and faucet shall be opened and closed several times. From several points in the system, the Contracting Officer will take samples of water in properly sterilized containers for bacterial examination. The samples of water shall be tested for total coliform organisms (coliform bacteria, fecal coliform, streptococcal, and other bacteria) in accordance with AWWA-01. The testing method used shall be either the multiple-tube fermentation technique or the membrane-filter

technique. The sterilizing shall be repeated until tests indicate the absence of coliform organisms (zero-mean coliform density per 100 milliliters) in the samples for at least 2 full days. The system will not be accepted until satisfactory bacteriological results have been obtained.

TABLE I. PIPE AND FITTING MATERIALS FOR

DRAINAGE, WASTE, AND VENT PIPING SYSTEMS

Item No.	Pipe and Fitting Material	SERVICE A	B	C	D	E
1	Cast-iron soil pipe and fittings, hub and spigot, ASTM A 74	X	X	X	X	X
2	Cast-iron soil pipe and fittings, hubless, CISPI 301 and ASTM A 888	X	X	X	X	
3	Cast-iron drainage fittings, threaded, ASME B16.12 for use with Item 6		X		X	X
4	Cast-iron screwed fittings, threaded, ASME B16.4 for use with Item 6		X		X	X
5	Ductile iron grooved joint fittings for ferrous pipe, ASTM A 536 and ASTM A 47 for use with Item 5		X		X	
6	Malleable-iron threaded fittings, galvanized, ASME B16.3 for use with Item 6				X	X
7	Steel pipe, seamless galvanized, ASTM A 53, Type S, Grade B	X		X	X	X
8	Seamless red brass pipe, ASTM B 43			X	X	X
9	Bronze flanged fittings, ASME B16.24 for use with Item 9			X	X	
10	Cast-copper alloy solder joint pressure fittings.				X	X
11	Bronze and sand castings, grooved joint pressure fittings for Non-Ferrous Pipe, ASTM B 584 for Use with Item 5			X		X

TABLE I. PIPE AND FITTING MATERIALS FOR

DRAINAGE, WASTE, AND VENT PIPING SYSTEMS

Item No.	Pipe and Fitting Material	SERVICE A	B	C	D	E
12	Wrought copper grooved joint pressure fittings for non-ferrous Pipe, ASTM B 75 C12200, ASTM B 152 C11000, ASME B16.22 for Use with Item 5					X
13	Seamless copper pipe, ASTM B 42				X	X
14	Cast-bronze threaded fittings, ASME B16.15 for use with Item 9				X	X
15	Copper drainage tube, (DWV), ASTM B 306	X*	X	X*	X	X
16	Wrought copper and wrought copper alloy solder-joint drainage fittings, ASME B16.29 for use with Item 12	X	X	X	X	X
17	Cast-copper alloy solder joint drainage fittings, (DWV), ASME B16.23 for use with Item 12	X	X	X	X	X
19	High silicon content cast iron pipe and fittings (hub and spigot, and mechanical joint), ASTM A 518				X	X
20	Filament-wound reinforced thermosetting resin (RTRP) pipe, ASTM D 2996					X

A - Underground Building Soil, Waste and Storm Drain
B - Aboveground Soil, Waste, Drain In Buildings
C - Underground Vent
D - Aboveground Vent
E - Interior Rainwater Conductors Aboveground
* - Hard Temper

TABLE II. PIPE AND FITTING MATERIALS FOR PRESSURE PIPING SYSTEMS

Item No.	Pipe and Fitting Material	SERVICE A	B	H
1	Malleable-iron threaded fittings, galvanized, ASME B16.3 for use with Item 4	X	X	
2	Ductile iron grooved joint fittings for ferrous pipe, ASTM A 536 and ASTM A 47 for Use with Item 2		X	X
3	Steel pipe: a. seamless galvanized, ASTM A 53, Type S, Grade B b. seamless, black, ASTM A 53, Type S, Grade B	X	X	
5	Ductile iron grooved joint fittings for ferrous pipe, ASTM A 536 and ASTM A 47 for use with Item 5		X	X
6	Seamless red brass pipe, ASTM B 43	X	X	
7	Bronze flanged fittings, ASME B16.24 for use with Items 5 and 7	X	X	
8	Seamless copper pipe, ASTM B 42	X	X	
9	Seamless copper water tube, ASTM B 88	X*	X*	
10	Seamless and welded copper distribution tube (Type D), ASTM B 641	X	X	
11	Bronze and sand castings grooved joint pressure fittings for non-ferrous pipe ASTM B 584 for use with Item 2		X	
12	Cast-bronze threaded fittings, ASME B16.15 for use with Items 5 and 7	X	X	
13	Wrought copper and bronze solder-joint pressure fittings, ASME B16.22 for use with Items 8 and 9	X	X	
14	Cast-copper alloy solder-joint pressure fittings,	X	X	

TABLE II. PIPE AND FITTING MATERIALS FOR PRESSURE PIPING SYSTEMS

Item No.	Pipe and Fitting Material	SERVICE A	B	H
	ASME B16.18 for use with Items 8 and 9			
15	Wrought copper and bronze mechanical-joint 2" to 4" pressure fittings, ASTM B 75, C12200; ASME B16.22 for use with Item 3	X	X	
16	Bronze and sand castings mechanical-joint 5" to 6" pressure fittings, ASTM B 584, for use with Item 3	X	X	
17	Flanges, pipe line, steel, MSS SP-44	X	X	
18	Unions, ASME B16.39; brass or bronze, FS WW-U-516, Composition B; carbon steel pipe unions socket welding and threaded, MSS SP-83; malleable-iron threaded union, ASME B16.39	X	X	
19	Nipples, pipe, threaded, ASTM A 733	X	X	

A - Cold Water Aboveground or Belowground
B - Hot Water 180 degrees F Maximum Aboveground
H - Aboveground only
Indicated types are minimum wall thicknesses.
* - Type L Hard
** - Type K Hard

TABLE III. STANDARD RATING CONDITIONS AND MINIMUM PERFORMANCE

RATINGS FOR WATER HEATING EQUIPMENT

A. STORAGE WATER HEATERS

FUEL	STORAGE CAPACITY GALLONS	INPUT RATING	TEST PROCEDURE	MINIMUM PERFORMANCE
Gas	100 max	75,000 Btu/h maximum	10 CFR 430	EF = 0.62-0.0019V minimum
Gas	100 min OR	75,000 Btu/h minimum	ANSI Z21.10.3	ET = 77 percent; SL = 1.3+38/V maximum

B. UNFIRED HOT WATER STORAGE

FUEL	STORAGE CAPACITY GALLONS	INPUT RATING	TEST PROCEDURE	MINIMUM PERFORMANCE

All volumes and inputs: maximum HL shall be 6.5 Btu/h/sq. ft.

TERMS:

EF = Energy factor, overall efficiency.
ET = Thermal efficiency with 70 degrees F delta T.
EC = Combustion efficiency, 100 percent - flue loss when smoke = 0 (trace is permitted).
SL = Standby loss in W/sq. ft. based on 80 degrees F delta T, or in percent per hour based on nominal 90 degrees F delta T.
HL = Heat loss of tank surface area
V = Storage volume in gallons

3.19 FRAMED INSTRUCTIONS

Framed instructions under glass or in laminated plastic, including wiring and control diagrams showing the complete layout of the entire system, shall be posted where directed. Condensed operating instructions explaining preventive maintenance procedures, methods of checking the system for normal safe operation, and procedures for safely starting and stopping the system shall be prepared in typed form, framed as specified above for the wiring and control diagrams and posted beside the diagrams. The framed instructions shall be posted before acceptance testing of the systems.

-- End of Section --

SECTION TABLE OF CONTENTS

DIVISION 15 - MECHANICAL

SECTION 15488

GAS PIPING SYSTEMS

01/89

PART 1 GENERAL

1.1 REFERENCES
1.2 GENERAL REQUIREMENTS
1.2.1 Welding
1.2.2 Jointing Thermoplastic and Fiberglass Piping
1.2.3 Standard Products
1.2.4 Verification of Dimensions
1.3 SUBMITTALS

PART 2 PRODUCTS

2.1 PIPE AND FITTINGS
2.1.1 Steel Pipe, Joints, and Fittings
2.1.2 Aluminum Alloy Pipe and Tubing, Joints, and Fittings
2.1.3 Copper Tubing, Joints and Fittings
2.1.4 Steel Tubing, Joints and Fittings
2.1.5 Thermoplastic Pipe, Tubing, Joints, and Fittings
2.1.6 Fiberglass Pipe, Joints, and Fittings
2.1.7 Sealants for Steel Pipe Threaded Joints
2.1.8 Identification
2.1.9 Flange Gaskets
2.1.10 Pipe Threads
2.1.11 Escutcheons
2.1.12 Gas Transition Fittings
2.1.13 Insulating Pipe Joints
2.1.13.1 Insulating Joint Material
2.1.13.2 Threaded Pipe Joints
2.1.13.3 Flanged Pipe Joints
2.1.14 Flexible Connectors
2.2 VALVES
2.2.1 Valves 50 mm (2 Inches) 2 Inches and Smaller
2.2.2 Valves 65 mm (2-1/2 Inches) 2-1/2 Inches and Larger
2.3 PIPE HANGERS AND SUPPORTS
2.4 METERS, REGULATORS AND SHUTOFF VALVES

PART 3 EXECUTION

3.1 EXCAVATION AND BACKFILLING
3.2 GAS PIPING SYSTEM
3.2.1 Protection of Materials and Components
3.2.2 Workmanship and Defects
3.3 PROTECTIVE COVERING
3.3.1 Underground Metallic Pipe
3.3.2 Aboveground Metallic Piping Systems
3.3.2.1 Ferrous Surfaces

3.3.2.2 Nonferrous Surfaces
3.4 INSTALLATION
3.4.1 Metallic Piping Installation
3.4.2 Metallic Tubing Installation
3.4.3 Thermoplastic and Fiberglass Piping, Tubing, and Fittings
3.4.4 Connections Between Metallic and Plastic Piping
3.4.5 Piping Buried Under Buildings
3.4.6 Concealed Piping in Buildings
3.4.6.1 Piping in Partitions
3.4.6.2 Piping in Floors
3.4.7 Aboveground Piping
3.4.8 Final Gas Connections
3.5 PIPE JOINTS
3.5.1 Threaded Metallic Joints
3.5.2 Welded Metallic Joints
3.5.3 Thermoplastic and Fiberglass Joints
3.5.4 Flared Metallic Tubing Joints
3.5.5 Solder or Brazed Joints
3.5.6 Joining Thermoplastic or Fiberglass to Metallic Piping or Tubing
3.6 PIPE SLEEVES
3.7 PIPES PENETRATING WATERPROOFING MEMBRANES
3.8 FIRE SEAL
3.9 ESCUTCHEONS
3.10 SPECIAL REQUIREMENTS
3.11 BUILDING STRUCTURE
3.12 PIPING SYSTEM SUPPORTS
3.13 ELECTRICAL BONDING AND GROUNDING
3.14 SHUTOFF VALVE
3.15 TESTING
3.15.1 Pressure Tests
3.15.2 Pressure Tests for Liquified Petroleum Gas
3.15.3 Test With Gas
3.15.4 Purging
3.15.5 Labor, Materials and Equipment

-- End of Section Table of Contents --

SECTION 15488

GAS PIPING SYSTEMS
01/89

PART 1 GENERAL

1.1 REFERENCES

The publications listed below form a part of this specification to the extent referenced. The publications are referred to in the text by basic designation only.

AMERICAN GAS ASSOCIATION (AGA)

AGA-01	(1989) A.G.A. Plastic Pipe Manual for Gas Service

AMERICAN NATIONAL STANDARDS INSTITUTE

ANSI Z21.45	(1992; Z21.4a; Z21.4b) Flexible Connectors of Other Than All-Metal Construction for Gas Appliances
ANSI Z21.69	(1992; Z21.69a) Connectors for Movable Gas Appliances

AMERICAN PETROLEUM INSTITUTE (API)

API Spec 6D	(1994) Specification for Pipeline Valves (Gate, Plug, Ball, and Check Valves)

AMERICAN SOCIETY FOR TESTING AND MATERIALS (ASTM)

ASTM A 539	(1990a) Electric-Resistance-Welded Coiled Steel Tubing for Gas and Fuel Oil Lines
ASTM B 88	(1993a) Seamless Copper Water Tube
ASTM B 210	(1993) Aluminum and Aluminum-Alloy Drawn Seamless Tubes
ASTM B 241	(1993) Aluminum and Aluminum-Alloy Seamless Pipe and Seamless Extruded Tube
ASTM B 280	(1993a) Seamless Copper Tube for Air Conditioning and Refrigeration Field Service
ASTM D 2513	(1993) Thermoplastic Gas Pressure Pipe, Tubing, and Fittings
ASTM D 2517	(1981; R 1987) Reinforced Epoxy Resin Gas Pressure Pipe and Fittings

AMERICAN SOCIETY OF MECHANICAL ENGINEERS (ASME)

ASME B1.20.1	(1983; R 1992) Pipe Threads, General Purpose (Inch)
ASME B16.3	(1992) Malleable Iron Threaded Fittings
ASME B16.5	(1988; Errata Oct 88; B16.5a) Pipe Flanges and Flanged Fittings
ASME B16.9	(1993) Factory-Made Wrought Steel Buttwelding Fittings
ASME B16.11	(1991) Forged Fittings, Socket-Welding and Threaded
ASME B16.21	(1992) Nonmetallic Flat Gaskets for Pipe Flanges
ASME B16.33	(1990) Manually Operated Metallic Gas Valves for Use in Gas Piping Systems Up to 125 psig (Sizes 1/2 through 2)
ASME B31.1	(1992; B31.1a; B31.1b) Power Piping
ASME B31.2	(1968) Fuel Gas Piping
ASME B36.10M	(1985) Welded and Seamless Wrought Steel Pipe
ASME BPV IX	(1992; Addenda Dec 1992, Dec 1993, Dec 1994) Boiler and Pressure Vessel Code; Section IX, Welding and Brazing Qualifications

MANUFACTURERS STANDARDIZATION SOCIETY OF THE VALVE AND FITTINGS INDUSTRY (MSS)

MSS SP-25	(1993) Standard Marking System for Valves, Fittings, Flanges and Unions
MSS SP-58	(1993) Pipe Hangers and Supports - Materials, Design and Manufacture
MSS SP-69	(1991) Pipe Hangers and Supports - Selection and Application

NATIONAL FIRE PROTECTION ASSOCIATION (NFPA)

NFPA 54	(1992) National Fuel Gas Code
NFPA 70	(1993) National Electrical Code

STEEL STRUCTURES PAINTING COUNCIL (SSPC)

SSPC SP 7	(1991) Brush-Off Blast Cleaning

UNDERWRITERS LABORATORIES (UL)

UL-06	(1994) Gas and Oil Equipment Directory

1.2 GENERAL REQUIREMENTS

1.2.1 Welding

Piping shall be welded in accordance with qualified procedures using performance qualified welders and welding operators. Procedures and welders shall be qualified in accordance with ASME BPV IX. Welding procedures qualified by others, and welders and welding operators qualified by another employer may be accepted as permitted by ASME B31.1. The Contracting Officer shall be notified at least 24 hours in advance of tests and the tests shall be performed at the work site if practicable. The Contracting Officer shall be furnished with a copy of qualified procedures and a list of names and identification symbols of qualified welders and welding operators. The welder or welding operator shall apply his assigned symbol near each weld he makes as a permanent record.

1.2.2 Jointing Thermoplastic and Fiberglass Piping

Piping shall be jointed by performance qualified joiners using qualified procedures in accordance with AGA-01. Plastic Pipe Manual for Gas Service. The Contracting Officer shall be furnished with a copy of qualified procedures and list of and identification symbols of qualified joiners.

1.2.3 Standard Products

Materials and equipment shall be the standard products of a manufacturer regularly engaged in the manufacture of the products and shall essentially duplicate items that have been in satisfactory use for at least 2 years prior to bid opening. Asbestos or products containing asbestos shall not be used. Manufacturer's descriptive data and installation instructions shall be submitted for approval for compression-type mechanical joints used in joining dissimilar materials and for insulating joints. Valves, flanges and fittings shall be marked in accordance with MSS SP-25.

1.2.4 Verification of Dimensions

The Contractor shall become familiar with all details of the work, verify all dimensions in the field, and shall advise the Contracting Officer of any discrepancy before performing the work.

1.3 SUBMITTALS

Government approval is required for submittals with a "GA" designation; submittals having an "FIO" designation are for information only. The following shall be submitted in accordance with Section 01300 SUBMITTAL PROCEDURES:

SD-04 Drawings

Gas Piping System; FIO.

Drawings showing location, size and all branches of pipeline; location of all required shutoff valves; and instructions necessary for the installation of connectors and supports.

PART 2 PRODUCTS

2.1 PIPE AND FITTINGS

2.1.1 Steel Pipe, Joints, and Fittings

Steel pipe shall conform to ASME B36.10M. Malleable-iron threaded fittings shall conform to ASME B16.3. Steel pipe flanges and flanged fittings including bolts, nuts, and bolt pattern shall be in accordance with ASME B16.5. Wrought steel buttwelding fittings shall conform to ASME B16.9. Socket welding and threaded forged steel fittings shall conform to ASME B16.11.

2.1.2 Aluminum Alloy Pipe and Tubing, Joints, and Fittings

Aluminum alloy pipe shall conform to ASTM B 241, except alloy 5456 shall not be used, and the ends of each length of pipe shall be marked indicating it conforms to NFPA 54. Pipe joints shall be threaded, flanged, brazed or welded.

Aluminum alloy tubing shall conform to ASTM B 210, Type A or B, or ASTM B 241, Type A or equivalent. Tubing joints shall be made up with gas tubing fittings recommended by the tubing manufacturer.

2.1.3 Copper Tubing, Joints and Fittings

Copper tubing shall conform to ASTM B 88, Type K or L, or ASTM B 280. Tubing joints shall be made up with tubing fittings recommended by the tubing manufacturer.

2.1.4 Steel Tubing, Joints and Fittings

Steel tubing shall conform to ASTM A 539. Tubing joints shall be made up with gas tubing fittings recommended by the tubing manufacturer.

2.1.5 Thermoplastic Pipe, Tubing, Joints, and Fittings

Thermoplastic pipe, tubing, joints and fittings shall conform to ASTM D 2513.

2.1.6 Fiberglass Pipe, Joints, and Fittings

Fiberglass piping systems shall conform to ASTM D 2517.

2.1.7 Sealants for Steel Pipe Threaded Joints

Joint sealing compound shall be listed in UL-06, Class 20 or less. Tetrafluoroethylene tape shall conform to UL-06.

2.1.8 Identification

Pipe flow markings and metal tags shall be provided as required.

2.1.9 Flange Gaskets

Gaskets shall be nonasbestos compressed material in accordance with ASME B16.21, 1/16 inch thickness, full face or self-centering flat ring type. The gaskets shall contain aramid fibers bonded with styrene butadiene rubber (SBR) or nitrile butadiene rubber (NBR) suitable for a maximum 600 degree F service. NBR binder shall be used for hydrocarbon service.

2.1.10 Pipe Threads

Pipe threads shall conform to ASME B1.20.1.

2.1.11 Escutcheons

Escutcheons shall be chromium-plated steel or chromium-plated brass, either one piece or split pattern, held in place by internal spring tension or set screw.

2.1.12 Gas Transition Fittings

Gas transition fittings shall be manufactured steel fittings approved for jointing metallic and thermoplastic or fiberglass pipe. Approved transition fittings are those that conform to AGA-01 requirements for transitions fittings.

2.1.13 Insulating Pipe Joints

2.1.13.1 Insulating Joint Material

Insulating joint material shall be provided between flanged or threaded metallic pipe systems where shown to control galvanic or electrical action.

2.1.13.2 Threaded Pipe Joints

Joints for threaded pipe shall be steel body nut type dielectric unions with insulating gaskets.

2.1.13.3 Flanged Pipe Joints

Joints for flanged pipe shall consist of full face sandwich-type flange insulating gasket of the dielectric type, insulating sleeves for flange bolts, and insulating washers for flange nuts.

2.1.14 Flexible Connectors

Flexible connectors for connecting gas utilization equipment to building gas piping shall conform to ANSI Z21.45. Flexible connectors for movable food service equipment shall conform to ANSI Z21.69.

2.2 VALVES

Valves shall be suitable for shutoff or isolation service and shall conform to the following:

2.2.1 Valves 2 Inches and Smaller

Valves 2 inches and smaller shall conform to ASME B16.33 and shall be of materials and manufacture compatible with system materials used.

2.2.2 Valves 2-1/2 Inches and Larger

Valves 2-1/2 inches and larger shall be carbon steel conforming to API Spec 6D, Class 150.

2.3 PIPE HANGERS AND SUPPORTS

Pipe hangers and supports shall conform to MSS SP-58 and MSS SP-69.

2.4 METERS, REGULATORS AND SHUTOFF VALVES

Meters, regulators and shutoff valves shall be as specified in Section 02685 GAS DISTRIBUTION SYSTEM.

PART 3 EXECUTION

3.1 EXCAVATION AND BACKFILLING

Earthwork shall be as specified in Section 02222 EXCAVATION, TRENCHING AND BACKFILLING FOR UTILITIES SYSTEMS.

3.2 GAS PIPING SYSTEM

Gas piping system shall be from the point of delivery, defined as the outlet of the meter set assembly service regulator shutoff valve, specified in Section 02685 GAS DISTRIBUTION SYSTEM, to the connections to each gas utilization device.

3.2.1 Protection of Materials and Components

Pipe and tube openings shall be closed with caps or plugs during installation. Equipment shall be protected from dirt, water, and chemical or mechanical damage. At the completion of all work, the entire system shall be thoroughly cleaned.

3.2.2 Workmanship and Defects

Piping, tubing and fittings shall be clear and free of cutting burrs and defects in structure or threading and shall be thoroughly brushed and chip-and scale-blown. Defects in piping, tubing or fittings shall not be repaired. When defective piping, tubing, or fittings are located in a system, the defective material shall be replaced.

3.3 PROTECTIVE COVERING

3.3.1 Underground Metallic Pipe

Buried metallic piping shall be protected from corrosion with protective coatings as specified in Section 02685 GAS DISTRIBUTION SYSTEM. When dissimilar metals are joined underground, gastight insulating fittings shall be used.

3.3.2 Aboveground Metallic Piping Systems

3.3.2.1 Ferrous Surfaces

Shop primed surfaces shall be touched up with ferrous metal primer. Surfaces that have not been shop primed shall be solvent cleaned. Surfaces that contain loose rust, loose mill scale and other foreign substances shall be mechanically cleaned by power wire brushing or brush-off blast cleaning conforming to SSPC SP 7 and primed with ferrous metal primer conforming to SSPC Paint 25. Primed surface shall be finished with two coats of exterior oil paint conforming to FS TT-P-102.

3.3.2.2 Nonferrous Surfaces

Except for aluminum alloy pipe, nonferrous surfaces shall not be painted. Surfaces of aluminum alloy pipe and fittings shall be painted to protect against external corrosion where they contact masonry, plaster, insulation, or are subject to repeated wettings by such liquids as water, detergents or sewage. The surfaces shall be solvent-cleaned in accordance with SSOC-SP1.

A first coat of zinc-molybdate, alkyd type primer in accordance with FS TT-P-645 and a second coat of alkyd gloss enamel conforming to FS TT-E-489 or silicone alkyd copolymer enamel conforming to SSPC Paint 21 shall be applied.

3.4 INSTALLATION

Installation of the gas system shall be in conformance with the manufacturer's recommendations and applicable provisions of NFPA 54, AGA-01, and as indicated. Pipe cutting shall be done without damage to the pipe. Unless otherwise authorized, cutting shall be done by an approved type of mechanical cutter. Wheel cutters shall be used where practicable. On steel pipe 6 inches and larger, an approved gas cutting and beveling machine may be used. Cutting of thermoplastic and fiberglass pipe shall be in accordance with AGA-01.

3.4.1 Metallic Piping Installation

Underground piping shall be buried a minimum of 18 inches below grade. Changes in direction of piping shall be made with fittings only; mitering or notching pipe to form elbows and tees or other similar type construction will not be permitted. Branch connection may be made with either tees or forged branch outlet fittings. Branch outlet fittings shall be forged, flared for improvement of flow where attached to the run, and reinforced against external strains. Aluminum alloy pipe shall not be used in exterior locations or underground.

3.4.2 Metallic Tubing Installation

Metallic tubing shall be installed using gas tubing fittings approved by the tubing manufacturer. Branch connections shall be made with tees. All tubing end preparation shall be made with tools designed for the purpose. Aluminum alloy tubing shall not be used in exterior locations or underground.

3.4.3 Thermoplastic and Fiberglass Piping, Tubing, and Fittings

Thermoplastic and fiberglass piping, tubing, and fittings shall be installed outside and underground only. Piping shall be buried a minimum of 18 inches below grade. The piping shall be installed to avoid excessive stresses due to thermal contraction. Thermoplastic and fiberglass piping shall only be allowed as indicated.

3.4.4 Connections Between Metallic and Plastic Piping

Connections shall be made only outside, underground, and with approved transition fittings.

3.4.5 Piping Buried Under Buildings

Underground piping installed beneath buildings shall be run in a steel pipe casing protected from corrosion with protective coatings as specified in Section 02685 GAS DISTRIBUTION SYSTEM. The casing shall extend at least 4 inches outside the building. The pipe shall have spacers and end bushings to seal at both ends to prevent the entrance of water and escape of gas. A vent line from the annular space shall extend above grade outside to a point where gas will not be a hazard and shall terminate in a rain- and insect-resistant fitting.

3.4.6 Concealed Piping in Buildings

When installing piping which is to be concealed, unions, tubing fittings, running threads, right- and left-hand couplings, bushings, and swing joints made by combinations of fittings shall not be used.

3.4.6.1 Piping in Partitions

Concealed piping shall be located in hollow rather than solid partitions. Tubing passing through walls or partitions shall be protected against physical damage.

3.4.6.2 Piping in Floors

Piping in solid floors except where embedment in concrete is indicated shall be laid in channels suitably covered to permit access to the piping with minimum damage to the building. Piping embedded in concrete shall be surrounded by a minimum of 1-1/2 inches of concrete and shall not be in physical contact with other metallic items such as reinforcing rods or electrically neutral conductors. Piping shall not be embedded in concrete slabs containing quickset additives or cinder aggregate.

3.4.7 Aboveground Piping

Aboveground piping shall be run as straight as practicable along the alignment indicated and with a minimum of joints. Piping shall be separately supported. Exposed horizontal piping shall not be installed farther than 6 inches from nearest parallel wall in laundry areas where clothes hanging could be attempted.

3.4.8 Final Gas Connections

Unless otherwise specified herein, final connections shall be made with rigid metallic pipe and fittings. Provide accessible gas shutoff valve and coupling for each gas equipment item.

3.5 PIPE JOINTS

Pipe joints shall be designed and installed to effectively sustain the longitudinal pull-out forces caused by contraction of the piping or superimposed loads.

3.5.1 Threaded Metallic Joints

Threaded joints in metallic pipe shall have tapered threads evenly cut and shall be made with UL approved graphite joint sealing compound for gas service or tetrafluoroethylene tape applied to the male threads only. Threaded joints up to 1-1/2 inches in diameter may be made with approved tetrafluoroethylene tape. Threaded joints up to 2 inches in diameter may be made with approved joint sealing compound. After cutting and before threading, pipe shall be reamed and burrs shall be removed. Caulking of threaded joints to stop or prevent leaks shall not be permitted.

3.5.2 Welded Metallic Joints

Beveling, alignment, heat treatment, and inspection of welds shall conform to ASME B31.2. Weld defects shall be removed and repairs made to the weld, or the weld joints shall be entirely removed and rewelded. After filler metal has been removed from its original package, it shall be protected or

stored so that its characteristics or welding properties are not affected adversely. Electrodes that have been wetted or have lost any of their coating shall not be used.

3.5.3 Thermoplastic and Fiberglass Joints

Jointing procedures shall conform to AGA-01. Solvent cement or heat of fusion joints shall not be made between different kinds of plastics.

3.5.4 Flared Metallic Tubing Joints

Flared joints in metallic tubing shall be made with special tools recommended by the tubing manufacturer. Flared joints shall be used only in systems constructed from nonferrous pipe and tubing, when experience or tests have demonstrated that the joint is suitable for the conditions, and when adequate provisions are made in the design to prevent separation of the joints. Metallic ball sleeve compression-type tubing fittings shall not be used for tubing joints.

3.5.5 Solder or Brazed Joints

Joints in metallic tubing and fittings shall be made with materials and procedures recommended by the tubing supplier. Joints shall be brazed with material having a melting point above 1000 degrees F. Brazing alloys shall not contain phosphorous.

3.5.6 Joining Thermoplastic or Fiberglass to Metallic Piping or Tubing

When compression type mechanical joints are used, the gasket material in the fittings shall be compatible with the plastic piping and with the gas in the system. An internal tubular rigid stiffener shall be used in conjunction with the fitting, and the stiffener shall be flush with end of the pipe or tubing and shall extend at least to the outside end of the compression fitting when installed. The stiffener shall be free of rough or sharp edges and shall not be a force fit in the plastic. A split tubular stiffener shall not be used.

3.6 PIPE SLEEVES

Pipes passing through concrete or masonry walls or concrete floors or roofs shall be provided with pipe sleeves fitted into place at the time of construction. Sleeves shall not be installed in structural members except where indicated or approved. All rectangular and square openings shall be as detailed. Each sleeve shall extend through its respective wall, floor or roof, and shall be cut flush with each surface, except in mechanical room floors not located on grade where clamping flanges or riser pipe clamps are used. Sleeves in mechanical room floors above grade shall extend at least 4 inches above finish floor. Unless otherwise indicated, sleeves shall be large enough to provide a minimum clearance of 1/4 inch all around the pipe. Sleeves in bearing walls, waterproofing membrane floors, and wet areas shall be steel pipe. Sleeves in nonbearing walls, floors, or ceilings may be steel pipe, galvanized sheet metal with lock-type longitudinal seam, or moisture-resistant fiber or plastic. For penetrations of fire walls, fire partitions and floors which are not on grade, the annular space between the pipe and sleeve shall be sealed with firestopping material and sealant that meet the requirement of Section 07270 FIRESTOPPING.

3.7 PIPES PENETRATING WATERPROOFING MEMBRANES

Pipes penetrating waterproofing membranes shall be installed as specified in Section 15405 HOSPITAL.

3.8 FIRE SEAL

Penetrations of fire rated partitions, walls and floors shall be in accordance with Section 07270 FIRESTOPPING.

3.9 ESCUTCHEONS

Escutcheons shall be provided for all finished surfaces where gas piping passes through floors, walls, or ceilings except in boiler, utility, or equipment rooms.

3.10 SPECIAL REQUIREMENTS

Drips, grading of the lines, freeze protection, and branch outlet locations shall be as shown and shall conform to the requirements of NFPA 54.

3.11 BUILDING STRUCTURE

Building structure shall not be weakened by the installation of any gas piping. Beams or joists shall not be cut or notched.

3.12 PIPING SYSTEM SUPPORTS

Gas piping systems in buildings shall be supported with pipe hooks, metal pipe straps, bands or hangers suitable for the size of piping or tubing. Gas piping system shall not be supported by other piping. Spacing of supports in gas piping and tubing installations shall conform to the requirements of NFPA 54. The selection and application of supports in gas piping and tubing installations shall conform to the requirements of MSS SP-69. In the support of multiple pipe runs on a common base member, a clip or clamp shall be used where each pipe crosses the base support member. Spacing of the base support members shall not exceed the hanger and support spacing required for any of the individual pipes in the multiple pipe run. The clips or clamps shall be rigidly connected to the common base member. A clearance of 1/8 inch shall be provided between the pipe and clip or clamp for all piping which may be subjected to thermal expansion.

3.13 ELECTRICAL BONDING AND GROUNDING

A gas piping system within a building shall be electrically continuous and bonded to a grounding electrode as required by NFPA 70.

3.14 SHUTOFF VALVE

Main gas shutoff valve controlling the gas piping system shall be easily accessible for operation and shall be installed as indicated, protected from physical damage, and marked with a metal tag to clearly identify the piping system controlled.

3.15 TESTING

Before any section of a gas piping system is put into service, it shall be carefully tested to assure that it is gastight. Prior to testing, the system shall be blown out, cleaned and cleared of all foreign material.

Each joint shall be tested by means of an approved gas detector, soap and water, or an equivalent nonflammable solution. Testing shall be completed before any work is covered, enclosed, or concealed. All testing of piping systems shall be done with due regard for the safety of employees and the public during the test. Bulkheads, anchorage and bracing suitably designed to resist test pressures shall be installed if necessary. Oxygen shall not be used as a testing medium.

3.15.1 Pressure Tests

Before appliances are connected, piping systems shall be filled with air or an inert gas and shall withstand a minimum pressure of 3 pounds gauge for a period of not less than 10 minutes as specified in NFPA 54 without showing any drop in pressure. Oxygen shall not be used. Pressure shall be measured with a mercury manometer, slope gauge, or an equivalent device so calibrated as to be read in increments of not greater than 0.1 pound. The source of pressure shall be isolated before the pressure tests are made.

3.15.2 Pressure Tests for Liquified Petroleum Gas

Systems shall withstand the pressure test described above. When appliances are connected to the piping system, fuel gas shall be used for testing and appliances shall withstand a pressure of not less than 10.0 inches nor more than 14.0 inches water column (8.0 ounces per square inch) for a period of not less than 10 minutes without showing any drop in pressure. Pressure shall be measured with a water manometer or an equivalent device calibrated to be read in increments of not greater than 0.1 inch water column. The source of pressure shall be isolated before the pressure tests are made.

3.15.3 Test With Gas

Before turning gas under pressure into any piping, all openings from which gas can escape shall be closed. Immediately after turning on the gas, the piping system shall be checked for leakage by using a laboratory-certified gas meter, an appliance orifice, a manometer, or equivalent device. All testing shall conform to the requirements of NFPA 54. If leakage is recorded, the gas supply shall be shut off, the leak shall be repaired, and the tests repeated until all leaks have been stopped.

3.15.4 Purging

After testing is completed, and before connecting any appliances, all gas piping shall be fully purged. LPG piping tested using fuel gas with appliances connected does not require purging. Piping shall not be purged into the combustion chamber of an appliance. The open end of piping systems being purged shall not discharge into confined spaces or areas where there are ignition sources unless the safety precautions recommended in NFPA 54 are followed.

3.15.5 Labor, Materials and Equipment

All labor, materials and equipment necessary for conducting the testing and purging shall be furnished by the Contractor.

-- End of Section --

SECTION TABLE OF CONTENTS

DIVISION 15 - MECHANICAL

SECTION 15569

WATER AND STEAM HEATING; OIL, GAS OR BOTH; UP TO 20 MBTUH

05/95

PART 1 GENERAL

1.1 REFERENCES
1.2 GENERAL REQUIREMENTS
1.2.1 Standard Products
1.2.2 Asbestos Prohibition
1.2.3 Nameplates
1.2.4 Equipment Guards
1.2.5 Verification of Dimensions
1.2.6 Welding
1.3 SUBMITTALS
1.4 MANUFACTURER'S SERVICES
1.5 DELIVERY AND STORAGE

PART 2 PRODUCTS

2.1 BOILERS
2.1.1 Firetube Firebox Boiler
2.1.2 Hot Water Heating Boilers
2.2 FUEL BURNING EQUIPMENT
2.2.1 Burners
2.2.1.1 Gas Fired Burners and Controls
2.2.2 Draft Fans
2.2.2.1 Draft Fan Control
2.2.2.2 Draft Fan Drives
2.2.3 Draft Damper
2.3 COMBUSTION CONTROL EQUIPMENT
2.3.1 Electrical controls
2.3.2 Water Temperature Controller
2.3.3 Boiler Combustion Controls and Positioners
2.3.4 Combustion Safety Controls and Equipment
2.3.4.1 Low-water Cutoff
2.3.4.2 Water Flow Interlock
2.4 PUMPS
2.4.1 Hot Water and Boiler Circulating Pumps
2.5 RADIATORS
2.6 AIR HANDLING UNITS
2.7 FITTINGS AND ACCESSORIES
2.7.1 Conventional Breeching and Stacks
2.7.1.1 Stacks
2.7.2 Expansion Tank
2.7.3 Air Separator
2.7.4 Gaskets
2.7.5 Steel Pipe and Fittings
2.7.5.1 Steel Pipe
2.7.5.2 Steel Pipe Fittings

2.7.5.3 Steel Flanges
2.7.5.4 Welded Fittings
2.7.5.5 Cast-Iron Fittings
2.7.5.6 Malleable-Iron Fittings
2.7.5.7 Unions
2.7.5.8 Threads
2.7.6 Copper Tubing and Fittings
2.7.6.1 Copper Tubing
2.7.6.2 Solder-Joint Pressure Fittings
2.7.6.3 Flared Fittings
2.7.6.4 Adapters
2.7.6.5 Unions
2.7.6.6 Brazing Material
2.7.6.7 Brazing Flux
2.7.6.8 Solder Material
2.7.6.9 Solder Flux
2.7.7 Dielectric Unions
2.7.8 Flexible Pipe Connectors
2.7.9 Pipe Supports
2.7.10 Valves
2.7.10.1 Gate Valves
2.7.10.2 Globe Valves
2.7.10.3 Check Valves
2.7.10.4 Angle Valves
2.7.10.5 Ball Valves
2.7.10.6 Plug Valves
2.7.10.7 Balancing Valves
2.7.10.8 Butterfly Valves
2.7.10.9 Drain valves
2.7.10.10 Safety Valves
2.7.10.11 Gauge Cocks
2.7.11 Strainers
2.7.12 Pressure Gauges
2.7.13 Thermometers
2.7.14 Air Vents
2.7.14.1 Manual Air Vents
2.7.14.2 Automatic Air Vents
2.8 ELECTRICAL EQUIPMENT
2.8.1 Motor Ratings
2.8.2 Motor Controls
2.9 INSULATION
2.10 TOOLS
2.10.1 Tube Brush
2.10.2 Wrenches
2.11 BOILER WATER TREATMENT
2.11.1 MakeUp Water Analysis
2.11.2 Boiler Water Limits
2.11.3 Chemical Shot Feeder
2.11.4 Chemical Piping
2.11.5 Test Kits

PART 3 EXECUTION

3.1 ERECTION OF BOILER AND AUXILIARY EQUIPMENT
3.2 PIPING INSTALLATION
3.2.1 Cold Water Connections
3.2.2 Hot Water Piping and Fittings
3.2.3 Vent Piping and Fittings
3.2.4 Gauge Piping

3.2.5 Joints
3.2.5.1 Threaded Joints
3.2.5.2 Welded Joints
3.2.5.3 Flared and Brazed Copper Pipe and Tubing
3.2.5.4 Soldered Joints
3.2.5.5 Copper Tube Extracted Joint
3.2.6 Flanges and Unions
3.2.7 Branch Connections
3.2.7.1 Branch Connections for Hot Water Systems
3.2.8 Flared, Brazed, and Soldered Copper Pipe and Tubing
3.2.9 Copper Tube Extracted Joint
3.2.10 Supports
3.2.10.1 General
3.2.10.2 Seismic Requirements for Supports and Structural Bracing
3.2.10.3 Pipe Hangers, Inserts, and Supports
3.2.10.4 Multiple Pipe Runs
3.2.11 Anchors
3.2.12 Valves
3.2.13 Pipe Sleeves
3.2.13.1 Pipes Passing Through Waterproofing Membranes
3.2.13.2 Optional Modular Mechanical Sealing Assembly
3.2.13.3 Optional Counterflashing
3.2.13.4 Fire Seal
3.2.14 Balancing Valves
3.2.15 Thermometer Wells
3.2.16 Air Vents
3.2.17 Escutcheons
3.2.18 Drains
3.2.19 Strainer Blow-Down Piping
3.3 GAS FUEL SYSTEM
3.4 FIELD PAINTING
3.5 HEATING SYSTEM TESTS
3.5.1 Water Treatment Testing
3.5.1.1 Water Quality Test
3.5.1.2 Boiler/Piping Test
3.6 CLEANING
3.6.1 Boilers and Piping
3.6.2 Heating Units
3.7 FUEL SYSTEM TESTS
3.7.1 Gas System Test
3.8 FIELD TRAINING

-- End of Section Table of Contents --

SECTION 15569

WATER AND STEAM HEATING; OIL, GAS OR BOTH; UP TO 20 MBTUH
05/95

PART 1 GENERAL

1.1 REFERENCES

The publications listed below form a part of this specification to the extent referenced. The publications are referred to in the text by basic designation only.

AMERICAN NATIONAL STANDARDS INSTITUTE (ANSI)

ANSI Z21.13	(1991; Z21.13a) Gas-Fired Low-Pressure Steam and Hot Water Boilers

AMERICAN SOCIETY FOR TESTING AND MATERIALS (ASTM)

ASTM A 53	(1993a) Pipe, Steel, Black and Hot-Dipped, Zinc-Coated Welded and Seamless
ASTM A 105	(1994) Forgings, Carbon Steel, for Piping Components
ASTM A 167	(1993) Stainless and Heat-Resisting Chromium-Nickel Steel Plate, Sheet, and Strip
ASTM A 193	(1994b) Alloy-Steel and Stainless Steel Bolting Materials for High-Temperature Service
ASTM A 234	(1994) Piping Fittings of Wrought Carbon Steel and Alloy Steel for Moderate and Elevated Temperatures
ASTM A 515	(1992) Pressure Vessel Plates, Carbon Steel, for Intermediate- and Higher-Temperature Service
ASTM A 516	(1990) Pressure Vessel Plates, Carbon Steel, for Moderate- and Lower-Temperature Service
ASTM B 32	(1993) Solder Metal
ASTM B 62	(1993) Composition Bronze or Ounce Metal Castings
ASTM B 75	(1993) Seamless Copper Tube
ASTM B 88	(1993a) Seamless Copper Water Tube
ASTM B 813	(1993) Liquid and Paste Fluxes for Soldering Applications of Copper and

	Copper Alloy Tube
ASTM D 596	(1991) Reporting Results of Analysis of Water

AMERICAN SOCIETY OF MECHANICAL ENGINEERS (ASME)

ASME B1.20.1	(1983; R 1992) Pipe Threads, General Purpose (Inch)
ASME B16.4	(1992) Cast Iron Threaded Fittings Class 125 and 250
ASME B16.5	(1988; Errata Oct 88; B16.5a) Pipe Flanges and Flanged Fittings
ASME B16.9	(1993) Factory-Made Wrought Steel Buttwelding Fittings
ASME B16.11	(1991) Forged Steel Fittings, Socket-Welding and Threaded
ASME B16.18	(1984) Cast Copper Alloy Solder Joint Pressure Fittings
ASME B16.21	(1992) Nonmetallic Flat Gaskets for Pipe Flanges
ASME B16.22	(1989) Wrought Copper and Copper Alloy Solder Joint Pressure Fittings
ASME B16.26	(1988) Cast Copper Alloy Fittings for Flared Copper Tubes
ASME B16.34	(1988) Valves - Flanged, Threaded and Welding End
ASME B16.39	(1986) Malleable Iron Threaded Pipe Unions Classes 150, 250, and 300
ASME B31.1	(1992; B31.1a; B31.1b; B31.1c) Power Piping
ASME B31.5	(1992; B31.5a) Refrigeration Piping
ASME B40.1	(1991) Gauges - Pressure Indicating Dial Type - Elastic Element
ASME BPV IV	(1929; Addenda Dec 1992, Dec 1993, Dec 1994) Boiler and Pressure Vessel Code; Section IV, Heating Boilers
ASME BPV VIII Div 1	(1992; Addenda Dec 1992, Dec 1993, Dec 1994) Boiler and Pressure Vessel Code; Section VIII, Pressure Vessels Division 1 - Basic Coverage
ASME BPV IX	(1992; Addenda Dec 1992, Dec 1993, Dec 1994) Boiler and Pressure Vessel Code; Section IX, Welding and Brazing

	Qualifications
ASME CSD-1	(1992; CSD-1a; CSD1b) Controls and Safety Devices for Automatically Fired Boilers

AMERICAN WATER WORKS ASSOCIATION (AWWA)

AWWA C606	(1987) Grooved and Shouldered Joints

AMERICAN WELDING SOCIETY (AWS)

AWS A5.8	(1992) Filler Metals for Brazing and Braze Welding
AWS B2.2	(1991) Brazing Procedure and Performance Qualification

COPPER DEVELOPMENT ASSOCIATION (CDA)

CDA 404/0-RR	(1992) Copper Tube for Plumbing, Heating, Air Conditioning and Refrigeration

FEDERAL SPECIFICATIONS (FS)

FS QQ-B-654	(Rev A; Am 1; Notice 1) Brazing Alloys, Silver
FS W-F-2793	(Basic) Fans, Centrifugal, Draft, Forced and Induced (Inch-Pound)
FS WW-P-521	(Rev G) Pipe Fittings, Flange Fittings, and Flanges: Steel and Malleable Iron (Threaded and Butt-Welding) Class 150
FS WW-U-516	(Rev B; Notice 1) Unions, Brass or Bronze, Threaded Pipe Connections and Solder-Joint Tube Connections
FS WW-V-35	(Rev C) Valve, Ball

HYDRONICS INSTITUTE (HYI)

HYI-01	(1994) I=B=R Ratings for Boilers, Baseboard Radiation and Finned Tube (Commercial) Radiation

MANUFACTURERS STANDARDIZATION SOCIETY OF THE VALVE AND FITTINGS INDUSTRY (MSS)

MSS SP-25	(1993) Standard Marking System for Valves, Fittings, Flanges and Unions
MSS SP-58	(1993) Pipe Hangers and Supports - Materials, Design and Manufacture
MSS SP-69	(1991) Pipe Hangers and Supports - Selection and Application
MSS SP-70	(1990) Cast Iron Gate Valves, Flanged and

	Threaded Ends
MSS SP-71	(1990) Cast Iron Swing Check Valves, Flanges and Threaded Ends
MSS SP-73	(1991) Brazing Joints for Copper and Copper Alloy Pressure Fittings
MSS SP-78	(1987; R 1992) Cast Iron Plug Valves, Flanged and Threaded Ends
MSS SP-80	(1987) Bronze Gate, Globe, Angle and Check Valves
MSS SP-85	(1994) Cast Iron Globe & Angle Valves, Flanged and Threaded Ends

NATIONAL FIRE PROTECTION ASSOCIATION (NFPA)

NFPA 54	(1992) National Fuel Gas Code
NFPA 85C	(1991) Prevention of Furnace Explosions/Implosions in Multiple Burner Boiler-Furnaces
NFPA 8501	(1992) Single Burner Boiler Operations

UNDERWRITERS LABORATORIES (UL)

UL-06	(1994) Gas and Oil Equipment Directory
UL 795	(1994) Commercial-Industrial Gas Heating Equipment

1.2 GENERAL REQUIREMENTS

1.2.1 Standard Products

Materials and equipment shall be the standard products of a manufacturer regularly engaged in the manufacture of the products and shall essentially duplicate items that have been in satisfactory use for at least 2 years prior to bid opening. Equipment shall be supported by a service organization that is, in the opinion of the Contracting Officer, reasonably convenient to the site.

1.2.2 Asbestos Prohibition

Asbestos and asbestos-containing products shall not be used.

1.2.3 Nameplates

Each major component of equipment shall have the manufacturer's name, address, type or style, model or serial number, and catalog number on a plate secured to the equipment. Each pressure vessel shall have an approved ASME stamp.

1.2.4 Equipment Guards

Belts, pulleys, chains, gears, couplings, projecting setscrews, keys, and other rotating parts exposed to personnel contact shall be fully enclosed or guarded in accordance with OSHA requirements. High temperature equipment and piping exposed to contact by personnel or where it creates a potential fire hazard shall be properly guarded or covered with insulation of a type specified. Catwalks, operating platforms, ladders, and guardrails shall be provided where shown and shall be constructed in accordance with Section 05500 MISCELLANEOUS METAL.

1.2.5 Verification of Dimensions

The Contractor shall become familiar with details of the work, verify dimensions in the field, and shall advise the Contracting Officer of any discrepancy before performing any work or ordering any materials.

1.2.6 Welding

Boilers and piping shall be welded and brazed in accordance with qualified procedures using performance-qualified welders and welding operators. Procedures and welders shall be qualified in accordance with ASME BPV IX. Welding procedures qualified by others, and welders and welding operators qualified by another employer may be accepted as permitted by ASME B31.1. The Contracting Officer shall be notified 24 hours in advance of tests, and the tests shall be performed at the work site if practical. The welder or welding operator shall apply his assigned symbol near each weld he makes as a permanent record.

1.3 SUBMITTALS

Government approval is required for submittals with a "GA" designation; submittals having an "FIO" designation are for information only. The following shall be submitted in accordance with Section 01300 SUBMITTAL PROCEDURES:

SD-01 Data
Manufacturer's Catalog Data; GA.

Manufacturer's catalog data shall be included with the detail drawings for the following items:

Boilers
Fuel Burning Equipment
Combustion Control Equipment
Pumps
Fittings and Accessories
Fuel Oil Storage System
Water Treatment System

The data shall show model, size, options, etc., that are intended for consideration. Data submitted shall be adequate to demonstrate compliance with contract requirements.

Spare Parts Data; FIO.

Spare parts data for each different item of material and equipment, after approval of the detail drawings and no later than 2 months prior to the date of beneficial occupancy. The data shall include a complete list of parts and supplies, with current unit prices and source of supply, and a list of the parts recommended by the manufacturer to be replaced after 1

and 3 years of service.

Water Treatment Plan; FIO.

Six complete copies of the proposed water treatment plan. The plan shall include a layout, control scheme, a list of the existing water conditions including the items listed in paragraph BOILER WATER TREATMENT, a list of all chemicals, the proportion of chemicals to be added, the final treated water conditions, and a description of environmental concerns for handling the chemicals.

Heating and Fuel Systems Test Procedures; FIO.

Proposed test procedures for the heating system tests and fuel system tests, at least 2 weeks prior to the start of related testing.

Welding Procedures; FIO.

A copy of qualified welding procedures, at least 2 weeks prior to the start of welding operations.

Qualification; FIO.

A statement from the firms proposed to prepare submittals and perform installation and testing, demonstrating successful completion of similar services of at least five projects of similar size or scope, at least 2 weeks prior to the submittal of any other item required by this section.

Welding Qualification; FIO.

A list of names and identification symbols of qualified welders and welding operators, at least 2 weeks prior to the start of welding operations.

SD-04 Drawings

Heating System; GA.

Detail drawings consisting of equipment layout including installation details and electrical connection diagrams; combustion and safety control diagrams; ductwork layout showing the location of supports and hangers, typical hanger details, gauge reinforcement, reinforcement spacing rigidity classification, and static pressure and seal classifications; and piping layout showing the location of guides and anchors, the load imposed on each support or anchor, and typical support details. Drawings shall include any information required to demonstrate that the system has been coordinated and will properly function as a unit and shall show equipment relationship to other parts of the work, including clearances required for operation and maintenance.

SD-06 Instructions

Posted Instructions; GA.

System layout diagrams that show the layout of equipment, piping, and ductwork and typed condensed operation manuals explaining preventative maintenance procedures, methods of checking the system for normal, safe operation, and procedures for safely starting and stopping the system, framed under glass or laminated plastic, at least 2 weeks prior to the start of related testing. After approval, these items shall be posted

where directed.

SD-07 Schedules

Tests; FIO.

Proposed test schedules for the heating system and fuel system tests, at least 2 weeks prior to the start of related testing.

SD-09 Reports

Heating System and Fuel System Tests; FIO.

Test reports for the heating system tests and the fuel system test, upon completion of testing complete with results.

Water Treatment Tests; FIO.

(1) The water quality test report shall identify the chemical composition of the boiler water. The report shall include a comparison of the condition of the boiler water with the manufacturer's recommended conditions. Any required corrective action shall be documented within the report.

(2) A test report shall identify the condition of the boiler at the completion of 1 year of service. The report shall include a comparison of the condition of the boiler with the manufacturer's recommended operating conditions.

SD-13 Certificates

Bolts; FIO.

Written certification by the bolt manufacturer that the bolts furnished comply with the requirements of this specification. The certification shall include illustrations of product markings, the date of manufacture, and the number of each type of bolt to be furnished based on this certification.

Boiler Emissions; FIO.

Written certification by the boiler manufacturer that each boiler furnished complies with Federal, state, and local regulations for emissions. The certification shall also include a description of applicable emission regulations. If any boiler is exempt from the emission regulations, the certification shall indicate the reason for the exemption.

SD-19 Operation and Maintenance Manuals

Heating System; FIO.

Six complete manuals listing step-by-step procedures required for system startup, operation, shutdown, and routine maintenance, at least 2 weeks prior to field training. The manuals shall include the manufacturer's name, model number, parts list, simplified wiring and control diagrams, troubleshooting guide, and recommended service organization (including address and telephone number) for each item of equipment. Each service organization shall be capable of providing 4 hour onsite response to a service call on an emergency basis.

Water Treatment System; FIO.

Six complete copies of operating and maintenance manuals for the step-by-step water treatment procedures, including procedures for testing the water quality.

1.4 MANUFACTURER'S SERVICES

Services of a manufacturer's representative who is experienced in the installation, adjustment, and operation of the equipment specified shall be provided. The representative shall supervise the installing, adjusting, and testing of the equipment.

1.5 DELIVERY AND STORAGE

Equipment delivered and placed in storage shall be protected from the weather, humidity and temperature variations, dirt and dust, and other contaminants.

PART 2 PRODUCTS

2.1 BOILERS

Each boiler shall have the output capacity in British thermal units per hour (Btuh) as indicated when fired with the specified fuels. The boiler shall be furnished complete with the gas burning equipment, boiler fittings and trim, automatic controls, forced draft fan, electrical wiring, insulation, piping connections, and protective jacket. The boiler shall be completely assembled and tested at the manufacturer's plant. Boiler auxiliaries including fans, motors, drives, and similar equipment shall be provided with at least 10 percent excess capacity to allow for field variations in settings and to compensate for any unforeseen increases in pressure losses in appurtenant piping and ductwork. However, the boiler safety devices shall not be sized for a 10 percent excess capacity. The boiler and its accessories shall be designed and installed to permit ready accessibility for operation, maintenance, and service. Boilers shall be designed, constructed, and equipped in accordance with ASME BPV IV. Each boiler shall be of the firetube firebox type and designed for water service as specified herein. The boiler capacity shall be based on the ratings shown in HYI-01 or as certified by the American Boiler Manufacturers Association, or American Gas Association.

2.1.1 Firetube Firebox Boiler

Boiler shall be self-contained, multipass, packaged type, conforming to MS MIL-B-17452, complete with all accessories, mounted on a structural steel base. When the boilers is operating at maximum output, the heat input rates shall not be greater than 6,700 Btu/hr per square ft of fireside heating surface.

2.1.2 Hot Water Heating Boilers

The hot water heating boiler shall be capable of operating at the specified maximum continuous capacity without damage or deterioration to the boiler, its setting, firing equipment, or auxiliaries. The rated capacity shall be the capacity at which the boiler will operate continuously while maintaining at least the specified minimum efficiency. The boiler design conditions shall be as follows:

a. Boiler design pressure 30 psig.

b. Operating pressure at boiler outlet 12 psig.

c. Hot water temperature 180 degrees F.

d. Outdoor ambient air temperature 60 degrees F (max), 10 degrees F (min).

e. Site elevation 4785 feet.

f. Rated capacity as scheduled.

g. Gas fired boilers with a capacity of greater than or equal to 300,000 Btuh shall have a combustion efficiency of at least 80 percent when fired at the maximum and minimum ratings allowed by the controls.

2.2 FUEL BURNING EQUIPMENT

Boiler shall be designed to burn gas. Each boiler shall comply with Federal, state, and local emission regulations.

2.2.1 Burners

2.2.1.1 Gas Fired Burners and Controls

Burners shall be UL approved mechanical draft burners with all air necessary for combustion supplied by a blower where the operation is coordinated with the burner. Burner shall be provided complete with fuel supply system in conformance with the following safety codes or standards:

a. Gas-fired units shall conform to UL 795. Gas fired units less than 12,500,000 Btuh input shall conform to ANSI Z21.13.

2.2.2 Draft Fans

Fans conforming to FS W-F-2793 forced-draft shall be furnished as an integral part of boiler design. Fans shall be centrifugal with backward-curved blades, radial-tip blades or axial flow type. Each fan shall be sized for output volume and static pressure rating sufficient for pressure losses, excess air requirements at the burner, leakages, temperature, and elevation corrections for worst ambient conditions, all at full combustion to meet net-rated output at normal firing conditions, plus an overall excess air volume of 10 percent against a 20 percent static overpressure. Noise levels for fans shall not exceed 85 decibels in any octave band at a 3 foot station. Forced draft fan bearings shall be air cooled.

2.2.2.1 Draft Fan Control

Forced-draft centrifugal fans shall have inlet vane controls or shall have variable speed control where indicated. Inlet vanes shall be suitable for use with combustion control equipment.

2.2.2.2 Draft Fan Drives

Fans shall be driven by electric motors. Electric motor shall be drip

proof. Motor starter shall be magnetic across-the-line type with general purpose enclosure and shall be furnished with four auxiliary interlock contacts.

2.2.3 Draft Damper

Boilers shall be provided with manual dampers, draft hoods, or barometric dampers as recommended by the boiler manufacturer to maintain proper draft in the boiler. Draft damper shall be provided in a convenient and accessible location in the flue gas outlet from the boiler. Automatic damper shall be arranged for automatic operation by means of a furnace draft regulator.

2.3 COMBUSTION CONTROL EQUIPMENT

Combustion control equipment shall be provided as a system by a single manufacturer. Field installed automatic combustion control system shall be installed in accordance with the manufacturer's recommendations and under the direct supervision of a representative of the control manufacturer. The boiler water temperature shall be controlled by a water temperature controller. The equipment shall operate either electrically or pneumatically. On multiple boiler installations, each boiler unit shall have a completely independent system of controls responding to the load and to a plant master controller. If recording instruments are provided, a 1 year supply of ink and 400 blank charts for each recorder shall be furnished.

2.3.1 Electrical controls

Electrical control devices shall be rated at 120 volts and shall be connected as specified in Section 16415 ELECTRICAL WORK, INTERIOR.

2.3.2 Water Temperature Controller

The controller shall be of sturdy construction and shall be protected against dust and dampness. The thermostatic element shall be inserted in a separable socket installed in the upper part of the boiler near the water outlet. The controller shall operate on a 20 degree F differential over an adjustable temperature range of approximately 140 to 180 degrees F. The water temperature controller shall control the fuel burning equipment to maintain set boiler water temperature within 2 percent. Controller shall be furnished with necessary equipment to automatically adjust the setting to suit the outside weather conditions. The outside air reset controller shall be operated in such a manner that the operating temperatures required by the boiler manufacturer are not compromised.

2.3.3 Boiler Combustion Controls and Positioners

a. Gas boiler units shall be provided with modulating combustion controls with gas pilot or spark ignition. Modulating controls shall be provided with a means for manually controlling the firing rate.

a. Fixed rate on-off controls for boilers with capacities up to 600 kW (2,000,000 Btuh) shall use a water temperature controller in a temperature well in direct contact with the water.

2.3.4 Combustion Safety Controls and Equipment

Combustion safety controls and equipment shall be UL listed,

microprocessor-based distributed process controller. The controller shall be composed of an EPROM type chip. The system shall include mounting hardware, wiring and cables, and associated equipment. The controller shall be mounted completely wired, programmed, debugged, and tested to perform all of its functions. The controller shall process the signals for complete control and monitoring of the boiler. This shall include maintaining boiler status, starting and stopping all control functions, sequencing control functions and signaling alarm conditions. The program shall be documented and include cross references in description of coils and contacts. Microprocessor shall be able to perform self diagnostics and contain a message center to provide operator with status and failure mode information. Controllers for each boiler shall be mounted on a separate, free standing panel adjacent to the boiler or for packaged boilers on the boiler supporting structure. Control systems and safety devices for automatically fired boilers shall conform to ASME CSD-1. Electrical combustion and safety controls shall be rated at 120 volts, single phase, 60 Hz and shall be connected as specified in Section 16415 ELECTRICAL WORK, INTERIOR. A 4 inch diameter alarm bell shall be provided and shall be located where indicated or directed. The alarm bell shall ring when the boiler is shut down by any safety control or interlock. Indicating lights shall be provided on the control panel. A red light shall indicate flame failure, and a green light shall indicate that the main fuel valve is open. The following shutdown conditions shall require a manual reset before the boiler can automatically recycle:

a. Flame failure.

b. Failure to establish pilot flame.

c. Failure to establish main flame.

d. Low-water cutoff.

e. High temperature cutoff.

2.3.4.1 Low-water Cutoff

Low-water cutoff shall be provided to stop the burner and draft fan when the water level drops below a predetermined point. The cutoff shall consist of a float chamber with float, float switch, and drain valve. The float switch shall be mounted on the float chamber with a packless-type leakproof connection. The float mechanism and drain valve shall be constructed of a corrosion-resistant material. The low-water cutoff shall be UL-06 listed and shall be furnished with approved fittings and installed according to ASME boiler code requirements. The following type of low-water cutoff shall be utilized.

a. Feedwater Regulator with Low-Water Cutoff: Regulator shall be an approved design sized for the application. A regulator shall be provided for each boiler. The feeder shall be so arranged that water will be fed to the boiler automatically when the water level in the boiler drops below a preset point and will actuate the alarm bell when the water level reaches the low danger point. The boiler feeder shall be arranged so that the burner and forced-draft fan will stop whenever the water level drops below a preset danger point. The boiler feeder shall be constructed so that the feedwater valve and seat are isolated from the float chamber to prevent overheating of the feed water and precipitation of scale on either the valve or seat. Each float mechanism,

valve, and seat shall be constructed of an approved, durable, corrosion-resistant steel alloy. Valve seats shall be removable and renewable. The regulator shall be equipped with a large, self-cleaning strainer. The drain valve on the regulator shall be the gate or other straight-through type.

b. Supplementary Low-Water Cutoff: Supplementary low-water cutoff of the float activated type shall be provided in addition to the low-water cutoff required above on each boiler. Supplementary low-water cutoff shall be mounted directly in the boiler shell and shall be set below the low-water cutoff required above.

2.3.4.2 Water Flow Interlock

Hot water boiler limit controls shall be provided to include protection for low boiler water flow and high boiler water temperature. The limit controls shall be interlocked with the combustion control system to effect boiler alarm and shutdown. The controls shall not allow boiler startup unless hot water flow is proven.

2.4 PUMPS

2.4.1 Hot Water and Boiler Circulating Pumps

Circulating pumps for hot water shall be electrically driven single-stage centrifugal type and have a capacity not less than indicated. Boiler circulating pumps shall be supported by the piping on which installed and shall be closed-coupled shaft. Hot water circulating pumps shall be supported on a concrete foundation with a cast iron or structural steel base and shall have a flexible-coupled shaft. The hot water circulating pumps shall be end suction type. The pump shaft shall be constructed of corrosion-resistant alloy steel, sleeve bearings and glands of bronze designed to accommodate a mechanical seal, and the housing of close-grained cast iron. Pump seals shall be capable of withstanding 240 degrees F temperature without external cooling. The motor shall have sufficient power for the service required, shall be of a type approved by the manufacturer of the pump, shall be suitable for the available electric service, and shall conform to the requirements of paragraph ELECTRICAL EQUIPMENT. Each pump suction and discharge connection shall be provided with a pressure gauge as specified. The hot water circulating pump discharge heater shall be provided with a flow switch. Flow switch unit shall be a self-contained swinging vane type to indicate fluid flow.

2.5 RADIATORS

Radiators shall consist of metal fins permanently bonded to steel or nonferrous pipe cores, with threaded or sweat fittings at each end for connecting to external piping. Radiators shall have capacities not less than those indicated, determined in accordance with HYI-01. Radiators shall be equipped with solid-front, slotted horizontal-top cover grilles fabricated from black steel sheets not less than, 16 gauge, secured either directly to the radiators or to independent brackets. The space temperature shall be maintained automatically by regulating water flow to the radiators by the self contained, automatic thermostatic radiator control valves. Factory baked enamel finish. Submit colors to contracting officer.

2.6 AIR HANDLING UNITS

Air handling units and associated equipment shall be in accordance with Section 15895 AIR SUPPLY, DISTRIBUTION, VENTILATION, AND EXHAUST SYSTEM.

2.7 FITTINGS AND ACCESSORIES

Boiler fittings and accessories shall be installed with each boiler in accordance with ASME BPV IV, unless otherwise specified.

2.7.1 Conventional Breeching and Stacks

2.7.1.1 Stacks

Prefabricated double wall stacks system shall extend above the roof to the height indicated. The inner stack shall be 304 stainless steel having a thickness of not less than 0.035 inch. The outer stack shall be sheet steel having a thickness of not less than 0.025 inch. A method of maintaining concentricity between the inner and outer stacks shall be incorporated. The joints between the stack sections shall be sealed to prevent flue gas leakage. A 0.3125 inch diameter hole shall be provided in the stack not greater than 6 inches from the furnace flue outlet for sampling of the exit gases. A method shall be provided to seal the hole to prevent exhaust gases from entering the boiler room when samples are not being taken. Each stack shall be provided complete with rain hood.

2.7.2 Expansion Tank

The hot water pressurization system shall include a diaphragm-type expansion tank which will accommodate the expanded water of the system generated within the normal operating temperature range, limiting the pressure increase at all components in the system to the maximum allowable pressure at those components. The only air in the system shall be the permanent sealed-in air cushion contained in the diaphragm-type tank. The sizes shall be as indicated. The expansion tank shall be welded steel, constructed, tested, and stamped in accordance with ASME BPV VIII Div 1 for a working pressure of 125 psi and precharged to the minimum operating pressure. The tank's air chamber shall be fitted with an air charging valve and pressure gauge. The tank shall be supported by steel legs or bases for vertical installation or steel saddles for horizontal installations. The tank shall have lifting rings and a drain connection. All components shall be suitable for a maximum operating temperature of 250 degrees F.

2.7.3 Air Separator

External air separation tank shall be steel, constructed, tested and stamped in accordance with ASME BPV VIII Div 1 for a working pressure of 125 psi. The capacity of the air separation tank indicated is minimum. The maximum pressure drop through the air separator shall not exceed 1.6 psi with a strainer.

2.7.4 Gaskets

Gaskets shall be nonasbestos material in accordance with ASME B16.21, full face or self-centering type. The gaskets shall be of the spiral wound type with graphite filler material.

2.7.5 Steel Pipe and Fittings

2.7.5.1 Steel Pipe

Steel pipe shall be ASTM A 53, Type E or S, Grade A or B, black steel, standard weight.

2.7.5.2 Steel Pipe Fittings

Fittings shall have the manufacturer's trademark affixed in accordance with MSS SP-25 so as to permanently identify the manufacturer.

2.7.5.3 Steel Flanges

Flanged fittings including flanges, bolts, nuts, bolt patterns, etc. shall be in accordance with ASME B16.5 class 150 and shall have the manufacturers trademark affixed in accordance with MSS SP-25. Flange material shall conform to ASTM A 105. Flanges for high temperature water systems shall be serrated or raised-face type. Blind flange material shall conform to ASTM A 516 cold service and ASTM A 515 for hot service. Bolts shall be high strength or intermediate strength with material conforming to ASTM A 193.

2.7.5.4 Welded Fittings

Welded fittings shall conform to ASTM A 234 with WPA marking. Buttwelded fittings shall conform to ASME B16.9, and socket-welded fittings shall conform to ASME B16.11.

2.7.5.5 Cast-Iron Fittings

Fittings shall be ASME B16.4, Class 125, type required to match connecting piping.

2.7.5.6 Malleable-Iron Fittings

Fittings shall be FS WW-P-521, type as required to match connecting piping.

2.7.5.7 Unions

Unions shall be ASME B16.39, Class 150.

2.7.5.8 Threads

Pipe threads shall conform to ASME B1.20.1.

2.7.6 Copper Tubing and Fittings

2.7.6.1 Copper Tubing

Tubing shall be ASTM B 88, Type K or L. Adapters for copper tubing shall be brass or bronze for brazed fittings.

2.7.6.2 Solder-Joint Pressure Fittings

Wrought copper and bronze solder-joint pressure fittings shall conform to ASME B16.22 and ASTM B 75. Cast copper alloy solder-joint pressure fittings shall conform to ASME B16.18.

2.7.6.3 Flared Fittings

Cast copper alloy fittings for flared copper tube shall conform to ASME

B16.26 and ASTM B 62.

2.7.6.4 Adapters

Adapters may be used for connecting tubing to flanges and to threaded ends of valves and equipment. Extracted brazed tee joints produced with an acceptable tool and installed as recommended by the manufacturer may be used.

2.7.6.5 Unions

Unions shall conform to FS WW-U-516 for brass or bronze.

2.7.6.6 Brazing Material

Brazing material shall conform to AWS A5.8.

2.7.6.7 Brazing Flux

Flux shall be in paste or liquid form appropriate for use with brazing material. Flux shall be as follows: lead-free; have a 100 percent flushable residue; contain slightly acidic reagents; contain potassium borides, and contain fluorides. Silver brazing materials shall be in accordance with FS QQ-B-654.

2.7.6.8 Solder Material

Solder metal shall conform to ASTM B 32 95-5 tin-antimony.

2.7.6.9 Solder Flux

Flux shall be liquid form, non-corrosive, and conform to ASTM B 813, Standard Test 1.

2.7.7 Dielectric Unions

Dielectric unions shall have metal connections on both ends. The ends shall be threaded, flanged, or brazed to match adjacent piping. Metal parts of the union shall be separated so that the electrical current is below 1 percent of the galvanic current which would exist upon metal-to-metal contact.

2.7.8 Flexible Pipe Connectors

Flexible pipe connectors shall be designed for 125 psi or 150 psi service. Connectors shall be installed where indicated. The flexible section shall be constructed of rubber, tetrafluoroethylene resin, or corrosion-resisting steel, bronze, monel, or galvanized steel. Materials used and the configuration shall be suitable for the pressure, vacuum, and temperature medium. The flexible section shall be suitable for service intended and may have threaded, welded, soldered, flanged, or socket ends. Flanged assemblies shall be equipped with limit bolts to restrict maximum travel to the manufacturer's standard limits. Unless otherwise indicated, the length of the flexible connectors shall be as recommended by the manufacturer for the service intended. Internal sleeves or liners, compatible with circulating medium, shall be provided when recommended by the manufacturer. Covers to protect the bellows shall be provided where indicated.

2.7.9 Pipe Supports

Pipe supports shall conform to MSS SP-58 and MSS SP-69.

2.7.10 Valves

Valves shall be Class 125 and shall be suitable for the application. Grooved ends per AWWA C606 may be used for water service only. Valves in nonboiler external piping shall meet the material, fabrication and operating requirements of ASME B31.1. The connection type of all valves shall match the same type of connection required for the piping on which installed.

2.7.10.1 Gate Valves

Gate valves 2-1/2 inches and smaller shall conform to MSS SP-80 bronze rising stem, threaded, solder, or flanged ends. Gate valves 3 inches and larger shall conform to MSS SP-70 cast iron bronze trim, outside screw and yoke, flanged, or threaded ends.

2.7.10.2 Globe Valves

Globe valves 2-1/2 inches and smaller shall conform to MSS SP-80, bronze, threaded, soldered, or flanged ends. Globe valves 3 inches and larger shall conform to MSS SP-85, cast iron, bronze trim, flanged, or threaded ends.

2.7.10.3 Check Valves

Check valves 2-1/2 inches and smaller shall conform to MSS SP-80, bronze, threaded, soldered, or flanged ends. Check valves 3 inches and larger shall conform to MSS SP-71, cast iron, bronze trim, flanged, or threaded ends.

2.7.10.4 Angle Valves

Angle valves 2-1/2 inches and smaller shall conform to MSS SP-80 bronze, threaded, soldered, or flanged ends. Angle valves 3 inches and larger shall conform to MSS SP-85, cast iron, bronze trim, flanged, or threaded ends.

2.7.10.5 Ball Valves

Ball valves 1/2 inch and larger shall conform to FS WW-V-35, ductile iron or bronze, threaded, soldered, or flanged ends.

2.7.10.6 Plug Valves

Plug valves 2 in. and larger shall conform to MSS SP-78. Plug valves smaller than 2 in. shall conform to ASME B16.34.

2.7.10.7 Balancing Valves

Balancing valves shall have meter connections with positive shutoff valves. An integral pointer shall register the degree of valve opening. Valves shall be calibrated so that flow rate can be determined when valve opening in degrees and pressure differential across valve is known. Each balancing valve shall be constructed with internal seals to prevent leakage and shall be supplied with preformed insulation. Valves shall be suitable for 250

degrees F temperature and working pressure of the pipe in which installed. Valve bodies shall be provided with tapped openings and pipe extensions with shutoff valves outside of pipe insulation. The pipe extensions shall be provided with quick connecting hose fittings for a portable meter to measure the pressure differential. One portable differential meter shall be furnished. The meter suitable for the operating pressure specified shall be complete with hoses, vent, and shutoff valves, and carrying case. In lieu of the balancing valve with integral metering connections, a ball valve or plug valve with a separately installed orifice plate or venturi tube may be used for balancing.

2.7.10.8 Butterfly Valves

Butterfly valves shall be 2-flange type or lug wafer type, and shall be bubbletight at 150 psig. Valve bodies shall be cast iron, malleable iron, or steel. ASTM A 167, Type 404 or Type 316, corrosion resisting steel stems, bronze, or corrosion resisting steel discs, and synthetic rubber seats shall be provided. Valves smaller than 8 inches shall have throttling handles with a minimum of seven locking positions. Valves 8 inches and larger shall have totally enclosed manual gear operators with adjustable balance return stops and position indicators. Valves in insulated lines shall have extended neck to accommodate insulation thickness.

2.7.10.9 Drain valves

Drain valves shall be provided at each drain point of blowdown as recommended by the boiler manufacturer. Piping shall conform to ASME BPV IV and ASTM A 53.

2.7.10.10 Safety Valves

Safety valves shall have steel bodies and shall be equipped with corrosion-resistant trim and valve seats. The valves shall be properly guided and shall be positive closing so that no leakage can occur. Adjustment of the desired back-pressure shall cover the range between 2 and 10 psig. The adjustment shall be made externally, and any shafts extending through the valve body shall be provided with adjustable stuffing boxes having renewable packing. Boiler safety valves of proper size and of the required number, in accordance with ASME BPV IV, shall be installed so that the discharge will be through piping extended to a location as indicated. Each discharge pipe for hot water service shall be pitched away from the valve seat.

2.7.10.11 Gauge Cocks

Brass, "T" handle gauge cocks.

2.7.11 Strainers

Basket and "Y" type strainers shall be the same size as the pipelines in which they are installed. The strainer bodies shall be heavy and durable, fabricated of cast iron, and shall have bottoms drilled and tapped with a gate valve attached for blowdown purposes. Strainers shall be designed for 125 psig service and 250 degrees F. The bodies shall have arrows clearly cast on the sides indicating the direction of flow. Each strainer shall be equipped with an easily removable cover and sediment screen. The screen shall be made of 22 gauge monel with small perforations numbering not less than 400 per square inch to provide a net free area through the basket of

at least 3.30 times that of the entering pipe. The flow shall be into the screen and out through the perforations.

2.7.12 Pressure Gauges

Gauges shall conform to ASME B40.1 and shall be provided with throttling type needle valve or a pulsation dampener and shutoff valve. Minimum dial size shall be 3-1/2 inches. A pressure gauge shall be provided for each boiler in a visible location on the boiler.

2.7.13 Thermometers

Thermometers shall be provided with wells and separable corrosion-resistant steel sockets. Thermometers for inlet water and outlet water for each hot water boiler shall be provided in a visible location on the boiler. Thermometers shall have brass, malleable iron, or aluminum alloy case and frame, clear protective face, permanently stabilized glass tube with indicating-fluid column, white face, black numbers, and a minimum 9 inch scale.

2.7.14 Air Vents

2.7.14.1 Manual Air Vents

Manual air vents shall be brass or bronze valves or cocks suitable for the pressure rating of the piping system and furnished with threaded plugs or caps.

2.7.14.2 Automatic Air Vents

Automatic air vents shall be 3/4 inch quick-venting float and vacuum air valves. Each air vent valve shall have a large port permitting the expulsion of the air without developing excessive back pressure, a noncollapsible metal float which will close the valve and prevent the loss of water from the system, an air seal that will effectively close and prevent the re-entry of air into the system when subatmospheric pressures prevail therein, and a thermostatic member that will close the port against the passage of steam from the system. The name of the manufacturer shall be clearly stamped on the outside of each valve. The air vent valve shall be suitable for the pressure rating of the piping system.

2.8 ELECTRICAL EQUIPMENT

Electric motor-driven equipment shall be provided complete with motors, motor starters, and necessary control devices. Electrical equipment, motor control devices, motor efficiencies and wiring shall be as specified in Section 16415 ELECTRICAL WORK, INTERIOR. Motors which are not an integral part of a packaged boiler shall be rated for standard high efficiency service. Motors which are an integral part of the packaged boiler shall be the highest efficiency available by the manufacturer of the packaged boiler. Motor starters shall be provided complete with properly sized thermal overload protections and other appurtenances necessary for the motor control specified. Starters shall be furnished in general purpose enclosures. Manual or automatic control and protective or signal devices required for the operation specified and any control wiring required for controls and devices but not shown shall be provided.

2.8.1 Motor Ratings

Motors shall be suitable for the voltage and frequency provided. Motors 1 hp and larger shall be three-phase, unless otherwise indicated. Motors shall be of sufficient capacity to drive the equipment at the specified capacity without exceeding the nameplate rating on the motor.

2.8.2 Motor Controls

Motor controllers shall be provided complete with properly sized thermal overload protection. Manual or automatic control and protective or signal devices required for the operation specified and any wiring required to such devices shall be provided. Where two-speed or variable-speed motors are indicated, solid-state variable-speed controllers may be provided to accomplish the same function. Solid state variable speed controllers shall be utilized for fractional through 10 hp ratings. Adjustable frequency drives shall be used for larger motors.

2.9 INSULATION

Shop and field-applied insulation shall be as specified in Section 15250 THERMAL INSULATION FOR MECHANICAL SYSTEMS.

2.10 TOOLS

Special tools shall be furnished. Special tools shall include uncommon tools necessary for the operation and maintenance of boilers, burners, pumps, fans, controls, meters, special piping systems, and other equipment. Small hand tools shall be furnished within a suitable cabinet, mounted where directed.

2.10.1 Tube Brush

If a firetube boiler is being furnished, a tube brush, with steel bristles and jointed handle of sufficient length to clean full length of firetubes, shall be provided.

2.10.2 Wrenches

Wrenches shall be provided as required for specialty fittings such as manholes, handholes, and cleanouts. One set of extra gaskets shall be provided for all manholes and handholes, for pump barrels, and other similar items of equipment. Gaskets shall be packaged and properly identified.

2.11 BOILER WATER TREATMENT

The water treatment system shall be capable of feeding chemicals and bleeding the system to prevent corrosion and scale within the boiler and piping distribution system. The water shall be treated to maintain the conditions recommended by the boiler manufacturer. Chemicals shall meet required federal, state, and local environmental regulations for the treatment of boilers and discharge to the sanitary sewer. The services of a company regularly engaged in the treatment of boilers shall be used to determine the correct chemicals and concentrations required for water treatment. The company shall maintain the chemical treatment and provide all chemicals required for a period of 1 year from the date of occupancy. Filming amines and proprietary chemicals shall not be used. The water treatment chemicals shall remain stable throughout the operating temperature range of the system and shall be compatible with pump seals and other elements of the system.

2.11.1 MakeUp Water Analysis

The makeup water conditions reported per ASTM D 596 are as follows:

Date of Sample	_____
Temperature	_____ degrees F
Silica (SiO_2)	_____ ppm (mg/1)
Insoluble	_____ ppm (mg/1)
Iron and Aluminum Oxides	_____ ppm (mg/1)
Calcium (Ca)	_____ ppm (mg/1)
Magnesium (Mg)	_____ ppm (mg/1)
Sodium and Potassium (Na and K)	_____ ppm (mg/1)
Carbonate (HCO_3)	_____ ppm (mg/1)
Sulfate (SO_4)	_____ ppm (mg/1)
Chloride (C1)	_____ ppm (mg/1)
Nitrate (NO_3)	_____ ppm (mg/1)
Turbidity	_____ unit
pH	_____
Residual Chlorine	_____ ppm (mg/1)
Total Alkalinity	_____ epm (meq/1)
Noncarbonate Hardness	_____ epm (meq/1)
Total Hardness	_____ epm (meq/1)
Dissolved Solids	_____ ppm (mg/1)
Fluorine	_____ ppm (mg/1)
Conductivity	_____ microhm, cm

2.11.2 Boiler Water Limits

The boiler manufacturer shall be consulted for the determination of the boiler water chemical composition limits. The boiler water limits shall be as follows unless dictated differently by the boiler manufacturer's recommendations:

Causticity	20-200 ppm
Total Alkalinity ($CACO_3$)	900-1200 ppm
Phosphate	30-60 ppm
Tanin	Medium
Dissolved Solids	3000-5000 ppm
Suspended Solids	300 ppm Max
Sodium Sulfite	20-40 ppm Max
Silica	Less than 150 ppm
Dissolved Oxygen	Less than 7 ppm
Iron	10 ppm
pH (Condensate)	7 - 8
Sodium Sulfite	20-40 ppm
Hardness	Less than 2 ppm
pH	9.3 - 9.9

2.11.3 Chemical Shot Feeder

A shot feeder shall be provided as indicated. Size and capacity of feeder shall be based upon local requirements and water analysis. The feeder shall be furnished with an air vent, gauge glass, funnel, valves, fittings, and piping.

2.11.4 Chemical Piping

The piping and fittings shall be constructed of schedule 80 PVC steel

stainless steel.

2.11.5 Test Kits

One test kit of each type required to determine the water quality as outlined within the operation and maintenance manuals shall be provided.

PART 3 EXECUTION

3.1 ERECTION OF BOILER AND AUXILIARY EQUIPMENT

Boiler and auxiliary equipment shall be installed in accordance with manufacturer's written instructions. Proper provision shall be made for expansion and contraction between boiler foundation and floor. This joint shall be packed with suitable nonasbestos rope and filled with suitable compound that will not become soft at a temperature of 100 degrees F. Boilers and firing equipment shall be supported from the foundations by structural steel completely independent of all brickwork. Boiler supports shall permit free expansion and contraction of each portion of the boiler without placing undue stress on any part of the boiler or setting. Boiler breeching shall be as indicated with full provision for expansion and contraction between all interconnected components.

3.2 PIPING INSTALLATION

Unless otherwise specified, nonboiler external pipe and fittings shall conform to the requirements of ASME B31.1. Pipe installed shall be cut accurately to suit field conditions, shall be installed without springing or forcing, and shall properly clear windows, doors, and other openings. Cutting or other weakening of the building structure to facilitate piping installation will not be permitted. Pipes shall be free of burrs, oil, grease and other foreign material and shall be installed to permit free expansion and contraction without damaging the building structure, pipe, pipe joints, or pipe supports. Changes in direction shall be made with fittings, except that bending of pipe 4 inches and smaller will be permitted provided a pipe bender is used and wide sweep bends are formed. The centerline radius of bends shall not be less than 6 diameters of the pipe. Bent pipe showing kinks, wrinkles, flattening, or other malformations will not be accepted. Vent pipes shall be carried through the roof as directed and shall be properly flashed. Unless otherwise indicated, horizontal supply mains shall pitch down in the direction of flow with a grade of not less than 1 inch in 40 feet. Open ends of pipelines and equipment shall be properly capped or plugged during installation to keep dirt or other foreign materials out of the systems. Pipe not otherwise specified shall be uncoated. Unless otherwise specified or shown, final connections to equipment shall be made with malleable-iron unions for steel pipe 2-1/2 inches or less in diameter and with flanges for pipe 3 inches or more in diameter. Unions for copper pipe or tubing shall be brass or bronze. Reducing fittings shall be used for changes in pipe sizes. In horizontal hot water lines, reducing fittings shall be eccentric type to maintain the top of the lines at the same level to prevent air binding.

3.2.1 Cold Water Connections

Cold water fill connections shall be made to the water supply system as indicated. Necessary pipe, fittings, and valves required for water connections between the boiler and cold water main shall be provided as shown. The pressure regulating valve shall be of a type that will not

stick or allow pressure to build up on the low side. The valve shall be set to maintain a terminal pressure of approximately 5 psi in excess of the static head on the system and shall operate within a 2 psi tolerance regardless of cold water supply piping pressure and without objectionable noise under any condition of operation.

3.2.2 Hot Water Piping and Fittings

Pipe shall be black steel or copper tubing. Fittings for steel piping shall be black malleable iron or cast iron to suit piping. Fittings adjacent to valves shall suit valve material. Grooved mechanical fittings will not be allowed for water temperatures above \230 degrees F.~\

3.2.3 Vent Piping and Fittings

Vent piping shall be black steel. Fittings shall be black malleable iron or cast iron to suit piping.

3.2.4 Gauge Piping

Piping shall be copper tubing.

3.2.5 Joints

Joints between sections of steel pipe and between steel pipe and fittings shall be threaded, flanged or welded as indicated or specified. Except as otherwise specified, fittings 1 inch and smaller shall be threaded; fittings 1-1/4 inches and up to but not including 3 inches shall be either threaded, or welded; and fittings 3 inches and larger shall be either flanged, or welded. Pipe and fittings 1-1/4 inches and larger installed in inaccessible conduit or trenches beneath concrete floor slabs shall be welded. Connections to equipment shall be made with black malleable-iron unions for pipe 2-1/2 inches or smaller in diameter and with flanges for pipe 3 inches inches or larger in diameter. Joints between sections of copper tubing or pipe shall be flared, soldered, or brazed.

3.2.5.1 Threaded Joints

Threaded joints shall be made with tapered threads properly cut and shall be made perfectly tight with a stiff mixture of graphite and oil or with polytetrafluoroethylene tape applied to the male threads only and in no case to the fittings.

3.2.5.2 Welded Joints

Welded joints shall be in accordance with paragraph GENERAL REQUIREMENTS unless otherwise specified. Changes in direction of piping shall be made with welding fittings only; mitering or notching pipe to form elbows and tees or other similar type construction will not be permitted. Branch connections may be made with either welding tees or forged branch outlet fittings, either being acceptable without size limitation. Branch outlet fittings, where used, shall be forged, flared for improved flow characteristics where attached to the run, reinforced against external strains, and designed to withstand full pipe bursting strength. Socket weld joints shall be assembled so that the space between the end of the pipe and the bottom of the socket is no less than 1/16 inch and no more than 1/8 inch.

3.2.5.3 Flared and Brazed Copper Pipe and Tubing

Tubing shall be cut square, and burrs shall be removed. Both inside of fittings and outside of tubing shall be cleaned thoroughly with sand cloth or steel wire brush before brazing. Annealing of fittings and hard-drawn tubing shall not occur when making connections. Installation shall be made in accordance with the manufacturer's recommendations. Mitering of joints for elbows and notching of straight runs of pipe for tees will not be permitted. Brazed joints shall be made in conformance with AWS B2.2, MSS SP-73, and CDA 404/0-RR with flux. Copper-to-copper joints shall include the use of copper-phosphorous or copper-phosphorous-silver brazing metal without flux. Brazing of dissimilar metals (copper to bronze or brass) shall include the use of flux with either a copper-phosphorous, copper-phosphorous-silver or a silver brazing filler metal. Joints for flared fittings shall be of the compression pattern. Swing joints or offsets shall be provided in all branch connections, mains, and risers to provide for expansion and contraction forces without undue stress to the fittings or to short lengths of pipe or tubing. Flared or brazed copper tubing to pipe adapters shall be provided where necessary for joining threaded pipe to copper tubing.

3.2.5.4 Soldered Joints

Soldered joints shall be made with flux and are only acceptable for lines 2 inches and smaller. Soldered joints shall conform to ASME B31.5 and CDA 404/0-RR.

3.2.5.5 Copper Tube Extracted Joint

An extruded mechanical tee joint may be made in copper tube. Joint shall be produced with an appropriate tool by drilling a pilot hole and drawing out the tube surface to form a collar having a minimum height of three times the thickness of the tube wall. To prevent the branch tube from being inserted beyond the depth of the extracted joint, dimpled depth stops shall be provided. The branch tube shall be notched for proper penetration into fitting to assure a free flow joint. Extracted joints shall be brazed using a copper phosphorous classification brazing filler metal. Soldered joints will not be permitted.

3.2.6 Flanges and Unions

Flanges shall be faced true, provided with 1/16 inch thick gaskets, and made square and tight. Where steel flanges mate with cast-iron flanged fittings, valves, or equipment, they shall be provided with flat faces and full face gaskets. Union or flange joints shall be provided in each line immediately preceding the connection to each piece of equipment or material requiring maintenance such as coils, pumps, control valves, and other similar items. Dielectric pipe unions shall be provided between ferrous and nonferrous piping to prevent galvanic corrosion. The dielectric unions shall have metal connections on both ends. The ends shall be threaded, flanged, or brazed to match adjacent piping. The metal parts of the union shall be separated so that the electrical current is below 1 percent of the galvanic current which would exist upon metal-to-metal contact. Gaskets, flanges, and unions shall be installed in accordance with manufacturer's recommendations.

3.2.7 Branch Connections

3.2.7.1 Branch Connections for Hot Water Systems

Branches from the main shall pitch up or down as shown to prevent air entrapment. Connections shall ensure unrestricted circulation, eliminate air pockets, and permit complete drainage of the system. Branches shall pitch with a grade of not less than 1 inch in 10 feet. When indicated, special flow fittings shall be installed on the mains to bypass portions of the water through each radiator. Special flow fittings shall be standard catalog products and shall be installed as recommended by the manufacturer.

3.2.8 Flared, Brazed, and Soldered Copper Pipe and Tubing

Copper tubing shall be flared, brazed, or soldered. Tubing shall be cut square, and burrs shall be removed. Both inside of fittings and outside of tubing shall be cleaned thoroughly with sand cloth or steel wire brush before brazing. Annealing of fittings and hard-drawn tubing shall not occur when making connections. Installation shall be made in accordance with the manufacturer's recommendations. Mitering of joints for elbows and notching of straight runs of pipe for tees will not be permitted. Joints for flared fittings shall be of the compression pattern. Swing joints or offsets shall be provided on branch connections, mains, and risers to provide for expansion and contraction forces without undue stress to the fittings or to short lengths of pipe or tubing. Pipe adapters shall be provided where necessary for joining threaded pipe to copper tubing. Brazed joints shall be made in conformance with MSS SP-73, and CDA 404/0-RR. Copper-to-copper joints shall include the use of copper-phosphorous or copper-phosphorous-silver brazing metal without flux. Brazing of dissimilar metals (copper to bronze or brass) shall include the use of flux with either a copper-phosphorous, copper-phosphorous-silver, or a silver brazing filler metal. Soldered joints shall be made with flux and are only acceptable for lines 2 inches or smaller. Soldered joints shall conform to ASME B31.5 and shall be in accordance with CDA 404/0-RR.

3.2.9 Copper Tube Extracted Joint

An extracted mechanical tee joint may be made in copper tube. Joint shall be produced with an appropriate tool by drilling a pilot hole and drawing out the tube surface to form a collar having a minimum height of three times the thickness of the tube wall. To prevent the branch tube from being inserted beyond the depth of the extracted joint, dimpled depth stops shall be provided. The branch tube shall be notched for proper penetration into fitting to assure a free flow joint. Extracted joints shall be brazed using a copper phosphorous classification brazing filler metal. Soldered joints will not be permitted.

3.2.10 Supports

3.2.10.1 General

Hangers used to support piping 2 inches and larger shall be fabricated to permit adequate adjustment after erection while still supporting the load. Pipe guides and anchors shall be installed to keep pipes in accurate alignment, to direct the expansion movement, and to prevent buckling, swaying, and undue strain. Piping subjected to vertical movement when operating temperatures exceed ambient temperatures shall be supported by variable spring hangers and supports or by constant support hangers.

3.2.10.2 Seismic Requirements for Supports and Structural Bracing

Piping and attached valves shall be supported and braced to resist seismic

loads as specified in Section 13080 SEISMIC PROTECTION FOR MECHANICAL, ELECTRICAL EQUIPMENT and shown. Structural steel required for reinforcement to properly support piping, headers, and equipment, but not shown, shall be provided in this section. Material used for supports shall be as specified in Section 05120 STRUCTURAL STEEL.

3.2.10.3 Pipe Hangers, Inserts, and Supports

Pipe hangers, inserts, and supports shall conform to MSS SP-58 and MSS SP-69, except as modified herein.

a. Types 5, 12, and 26 shall not be used.

b. Type 3 shall not be used on insulated pipe which has a vapor barrier. Type 3 may be used on insulated pipe that does not have a vapor barrier if clamped directly to the pipe, if the clamp bottom does not extend through the insulation, and if the top clamp attachment does not contact the insulation during pipe movement.

c. Type 18 inserts shall be secured to concrete forms before concrete is placed. Continuous inserts which allow more adjustment may be used if they otherwise meet the requirements for Type 18 inserts.

d. Type 19 and 23 C-clamps shall be torqued per MSS SP-69 and have both locknuts and retaining devices furnished by the manufacturer. Field fabricated C-clamp bodies or retaining devices are not acceptable.

e. Type 20 attachments used on angles and channels shall be furnished with an added malleable-iron heel plate or adapter.

f. Type 24 may be used only on trapeze hanger systems or on fabricated frames.

g. Horizontal pipe supports shall be spaced as specified in MSS SP-69 and a support shall be installed not over 1 foot from the pipe fitting joint at each change in direction of the piping. Pipe supports shall be spaced not over 5 feet apart at valves.

h. Vertical pipe shall be supported at each floor, except at slab-on-grade, and at intervals of not more than 15 feet, not more than 8 feet from end of risers, and at vent terminations.

i. Type 35 guides using steel, reinforced polytetrafluoroethylene (PTFE) or graphite slides shall be provided where required to allow longitudinal pipe movement. Lateral restraints shall be provided as required. Slide materials shall be suitable for the system operating temperatures, atmospheric conditions, and bearing loads encountered.

(1) Where steel slides do not require provisions for restraint of lateral movement, an alternate guide method may be used. On piping 4 inches and larger, a Type 39 saddle may be welded to the pipe and freely rested on a steel plate. On piping under 4 inches, a Type 40 protection shield may be attached to the pipe or insulation and freely rested on a steel slide plate.

(2) Where there are high system temperatures and welding to piping

is not desirable, the Type 35 guide shall include a pipe cradle welded to the guide structure and strapped securely to the pipe. The pipe shall be separated from the slide material by at least 4 inches or by an amount adequate for the insulation, whichever is greater.

j. Except for Type 3, pipe hangers on horizontal insulated pipe shall be the size of the outside diameter of the insulation.

k. Piping in trenches shall be supported as indicated.

l. Structural steel attachments and brackets required to support piping, headers, and equipment, but not shown, shall be provided under this section. Material and installation shall be as specified under Section 05120 STRUCTURAL STEEL. Pipe hanger loads suspended from steel joist between panel points shall not exceed 50 pounds. Loads exceeding 50 pounds shall be suspended from panel points.

3.2.10.4 Multiple Pipe Runs

In the support of multiple pipe runs on a common base member, a clip or clamp shall be used where each pipe crosses the base support member. Spacing of the base support member shall not exceed the hanger and support spacing required for any individual pipe in the multiple pipe run. The clips or clamps shall be rigidly attached to the common base member. A clearance of 1/8 inch shall be provided between the pipe insulation and the clip or clamp for piping which may be subjected to thermal expansion.

3.2.11 Anchors

Anchors shall be provided where necessary to localize expansion or to prevent undue strain on piping. Anchors shall consist of heavy steel collars with lugs and bolts for clamping and attaching anchor braces, unless otherwise indicated. Anchor braces shall be installed in the most effective manner to secure the desired results, using turnbuckles where required. Supports, anchors, or stays shall not be attached where they will injure the structure or adjacent construction during installation or by the weight of expansion of the pipeline.

3.2.12 Valves

Valves shall be installed where indicated, specified, and required for functioning and servicing of the systems. Valves shall be safely accessible. Swing check valves shall be installed upright in horizontal lines and in vertical lines only when flow is in the upward direction. Gate and globe valves shall be installed with stems horizontal or above. Valves to be brazed shall be disassembled prior to brazing and all packing removed. After brazing, the valves shall be allowed to cool before reassembling.

3.2.13 Pipe Sleeves

Pipe passing through concrete or masonry walls or concrete floors or roofs shall be provided with pipe sleeves fitted into place at the time of construction. A waterproofing clamping flange shall be installed as indicated where membranes are involved. Sleeves shall not be installed in structural members except where indicated or approved. Rectangular and square openings shall be as detailed. Each sleeve shall extend through its

respective wall, floor, or roof. Sleeves through walls shall be cut flush with wall surface. Sleeves through floors shall extend above top surface of floor a sufficient distance to allow proper flashing or finishing. Sleeves through roofs shall extend above the top surface of roof at least 6 inches for proper flashing or finishing. Unless otherwise indicated, sleeves shall be sized to provide a minimum clearance of 1/4 inch between bare pipe and sleeves or between jacket over insulation and sleeves. Sleeves in waterproofing membrane floors, bearing walls, and wet areas shall be galvanized steel pipe or cast-iron pipe. Sleeves in nonbearing walls, floors, or ceilings may be galvanized steel pipe, cast-iron pipe, or galvanized sheet metal with lock-type longitudinal seam. Except in pipe chases or interior walls, the annular space between pipe and sleeve or between jacket over insulation and sleeve in nonfire rated walls shall be sealed as indicated and specified in Section 07920 JOINT SEALING. Metal jackets shall be provided over insulation passing through exterior walls, firewalls, fire partitions, floors, or roofs.

Metal jackets shall not be thinner than 0.006 inch thick aluminum, if corrugated, and 0.016 inch thick aluminum, if smooth.

Metal jackets shall be secured with aluminum or stainless steel bands not less than 3/8 inch wide and not more than 8 inches apart. When penetrating roofs and before fitting the metal jacket into place, a 1/2 inch wide strip of sealant shall be run vertically along the inside of the longitudinal joint of the metal jacket from a point below the backup material to a minimum height of 36 inches above the roof. If the pipe turns from vertical to horizontal, the sealant strip shall be run to a point just beyond the first elbow. When penetrating waterproofing membrane for floors, the metal jacket shall extend from a point below the back-up material to a minimum distance of 2 inches above the flashing. For other areas, the metal jacket shall extend from a point below the backup material to a point 12 inches above material to a minimum distance of 2 inches above the flashing. For other areas, the metal jacket shall extend from a point below the backup material to a point 12 inches above the floor; when passing through walls above grade, the jacket shall extend at least 4 inches beyond each side of the wall.

3.2.13.1 Pipes Passing Through Waterproofing Membranes

In addition to the pipe sleeves referred to above, pipes passing through waterproofing membranes shall be provided with a 4 pound lead flashing or a 16 ounce copper flashing, each within an integral skirt or flange. Flashing shall be suitably formed, and the skirt or flange shall extend not less than 8 inches from the pipe and shall set over the membrane in a troweled coating of bituminous cement. The flashing shall extend above the roof or floor a minimum of 10 inches. The annular space between the flashing and the bare pipe or between the flashing and the metal-jacket-covered insulation shall be sealed as indicated. Pipes up to and including 10 inches in diameter which pass through waterproofing membrane may be installed through a cast-iron sleeve with caulking recess, anchor lugs, flashing clamp device, and pressure ring with brass bolts. Waterproofing membrane shall be clamped into place and sealant shall be placed in the caulking recess.

3.2.13.2 Optional Modular Mechanical Sealing Assembly

At the option of the Contractor, a modular mechanical type sealing assembly may be installed in the annular space between the sleeve and conduit or pipe in lieu of a waterproofing clamping flange and caulking and sealing

specified above. The seals shall include interlocking synthetic rubber links shaped to continuously fill the annular space between the pipe/conduit and sleeve with corrosion-protected carbon steel bolts, nuts, and pressure plates. The links shall be loosely assembled with bolts to form a continuous rubber belt around the pipe with a pressure plate under each bolt head and each nut. After the seal assembly is properly positioned in the sleeve, tightening of the bolt shall cause the rubber sealing elements to expand and provide a watertight seal between the pipe/conduit and the sleeve. Each seal assembly shall be sized as recommended by the manufacturer to fit the pipe/conduit and sleeve involved.

3.2.13.3 Optional Counterflashing

As alternates to caulking and sealing the annular space between the pipe and flashing or metal-jacket-covered insulation and flashing, counterflashing may consist of standard roof coupling for threaded pipe up to 6 inches 6 inches in diameter, lead flashing sleeve for dry vents with the sleeve turned down into the pipe to form a waterproof joint, or a tack-welded or banded-metal rain shield around the pipe, sealed as indicated.

3.2.13.4 Fire Seal

Where pipes pass through firewalls, fire partitions, or floors, a fire seal shall be provided as specified in Section 07270 FIRESTOPPING.

3.2.14 Balancing Valves

Balancing valves shall be installed as indicated.

3.2.15 Thermometer Wells

A thermometer well shall be provided in each return line for each circuit in multicircuit systems.

3.2.16 Air Vents

Air vents shall be installed as directed. Manual air vents shall be installed above finished spaces. Automatic air vents shall be installed in mechanical spaces. Air vents shall be installed in piping at all system high points. The vent shall remain open until water rises in the tank or pipe to a predetermined level at which time it shall close tight. An overflow pipe from the vent shall be run to a point designated by the Contracting Officer's representative. The inlet to the air vent shall have a gate valve or ball valve.

3.2.17 Escutcheons

Escutcheons shall be provided at all finished surfaces where exposed piping, bare or insulated, passes through floors, walls, or ceilings except in boiler, utility, or equipment rooms. Escutcheons shall be fastened securely to pipe or pipe covering and shall be chromium-plated iron or chromium-plated brass, either one-piece or split pattern, held in place by internal spring tension or setscrews.

3.2.18 Drains

A drain connection with a 1 inch gate valve or 3/4 inch hose bib shall be installed at the lowest point in the return main near the boiler. In

addition, threaded drain connections with threaded cap or plug shall be installed on the heat exchanger coil on each unit heater or unit ventilator and wherever required for thorough draining of the system.

3.2.19 Strainer Blow-Down Piping

Strainer blow-down connections shall be fitted with a black steel blow-down pipeline routed to an accessible location and provided with a blow-down valve.

3.3 GAS FUEL SYSTEM

Gas piping, fittings, valves, regulators, tests, cleaning, and adjustments shall be in accordance with the Section 15488 GAS PIPING SYSTEMS. NFPA 54 shall be complied with unless otherwise specified. Burners, pilots, and all accessories shall be listed in UL-06. The fuel system shall be provided with a gas tight, manually operated, UL listed stop valve at the gas-supply connections, a gas strainer, a pressure regulator, pressure gauges, a burner-control valve, a safety shutoff valve suitable for size of burner and sequence of operation, and other components required for safe, efficient, and reliable operation as specified. Approved permanent and ready facilities to permit periodic valve leakage tests on the safety shutoff valve or valves shall be provided.

3.4 FIELD PAINTING

Ferrous metal not specified to be coated at the factory shall be cleaned, prepared, and painted as specified in Section 09900 PAINTING, GENERAL. Exposed pipe covering shall be painted as specified in Section 09900 PAINTING, GENERAL. Aluminum sheath over insulation shall not be painted.

3.5 HEATING SYSTEM TESTS

Before any covering is installed on pipe or heating equipment, the entire heating system's piping, fittings, and terminal heating units shall be hydrostatically tested and proved tight at a pressure of 1-1/2 times the design working pressure. Before pressurizing system for test, items or equipment (e.g., vessels, pumps, instruments, controls, relief valves) rated for pressures below the test pressure shall be blanked off or replaced with spool pieces. Before balancing and final operating test, test blanks and spool pieces shall be removed; and protected instruments and equipment shall be reconnected. With equipment items protected, the system shall be pressurized to test pressure. Pressure shall be held for a period of time sufficient to inspect all welds, joints, and connections for leaks, but not less than 2 hours. No loss of pressure will be allowed. Leaks shall be repaired and repaired joints shall be retested. Caulking of joints shall not be permitted. System shall be drained and after instruments and equipment are reconnected, the system shall be refilled with service medium and maximum operating pressure applied. The pressure shall be held while inspecting these joints and connections for leaks. The leaks shall be repaired and the repaired joints retested. Upon completion of hydrostatic tests and before acceptance of the installation, the Contractor shall balance the heating system in accordance with Section 15990 TESTING, ADJUSTING AND BALANCING OF HVAC SYSTEMS; and operating tests required to demonstrate satisfactory functional and operational efficiency shall be performed. The operating test shall cover a period of at least 24 hours for each system, and shall include, as a minimum, the following specific information in a report, together with conclusions as to the adequacy of the system:

a. Certification of balancing.

b. Time, date, and duration of test.

c. Outside and inside dry bulb temperatures.

d. Temperature of hot water supply leaving boiler.

e. Temperature of heating return water from system at condensate feed to boiler inlet.

f. Boiler make, type, serial number, design pressure, and rated capacity.

g. Fuel burner make, model, and rated capacity; ammeter and voltmeter readings for burner motor.

h. Circulating pump make, model, and rated capacity, and ammeter and voltmeter readings for pump motor during operation.

i. Flue-gas temperature at boiler outlet.

j. Percent carbon dioxide in flue-gas.

k. Grade or type and calorific value of fuel.

l. Draft at boiler flue-gas exit.

m. Draft or pressure in furnace.

n. Quantity of water circulated.

o. Quantity of fuel consumed.

p. Stack emission pollutants concentration.

Indicating instruments shall be read at half-hour intervals unless otherwise directed. The Contractor shall furnish all instruments, equipment, and personnel required for the tests and balancing. Fuels, water, and electricity shall be obtained as specified in the SPECIAL CLAUSES. Operating tests shall demonstrate that fuel burners and combustion and safety controls meet the requirements of ASME CSD-1 ANSI Z21.13 NFPA 8501 NFPA 85C.

3.5.1 Water Treatment Testing

3.5.1.1 Water Quality Test

The boiler water shall be analyzed prior to the acceptance of the facility a minimum of once a month for a period of 1 year by the water treatment company. The analysis shall include the following information recorded in accordance with ASTM D 596.

Date of Sample	_____
Temperature	_____ degrees F
Silica (SiO_2)	_____ ppm (mg/1)
Insoluble	_____ ppm (mg/1)
Iron and Aluminum Oxides	_____ ppm (mg/1)

Calcium (Ca)	_____	ppm (mg/1)
Magnesium (Mg)	_____	ppm (mg/1)
Sodium and Potassium (Na and K)	_____	ppm (mg/1)
Carbonate (HCO3)	_____	ppm (mg/1)
Sulfate (SO4)	_____	ppm (mg/1)
Chloride (C1)	_____	ppm (mg/1)
Nitrate (NO3)	_____	ppm (mg/1)
Turbidity	_____	unit
pH	_____	
Residual Chlorine	_____	ppm (mg/1)
Total Alkalinity	_____	epm (meq/1)
Noncarbonate Hardness	_____	epm (meq/1)
Total Hardness	_____	epm (meq/1)
Dissolved Solids	_____	ppm (mg/1)
Fluorine	_____	ppm (mg/1)
Conductivity	_____	microhm/cm

If the boiler water is not in conformance with the boiler manufacturer's recommendations, the water treatment company shall take corrective action.

3.5.1.2 Boiler/Piping Test

At the conclusion of the 1 year period, the boiler and condensate piping shall be inspected for problems due to corrosion and scale. If the boiler is found not to conform to the manufacturer's recommendations, and the water treatment company recommendations have been followed, the water treatment company shall provide all chemicals and labor for cleaning or repairing the equipment as required by the manufacturer's recommendations. If corrosion is found within the condensate piping, proper repairs shall be made by the water treatment company.

3.6 CLEANING

3.6.1 Boilers and Piping

After the hydrostatic tests have been made and before the system is balanced and operating tests are performed, the boilers and feed water piping shall be thoroughly cleaned by filling the system with a solution consisting of either 1 pound of caustic soda or 1 pound of trisodium phosphate per 50 gallons of water. The proper safety precautions shall be observed in the handling and use of these chemicals. The water shall be heated to approximately 150 degrees F and the solution circulated in the system for a period of 48 hours. The system shall then be drained and thoroughly flushed out with fresh water. Strainers and valves shall be thoroughly cleaned. Prior to operating tests, air shall be removed from all water systems by operating the air vents.

3.6.2 Heating Units

Inside space heating equipment, ducts, plenums, and casing shall be thoroughly cleaned of debris and blown free of small particles of rubbish and dust and then vacuum cleaned before installing outlet faces. Equipment shall be wiped clean, with all traces of oil, dust, dirt, or paint spots removed. Temporary filters shall be provided for fans that are operated during construction, and new filters shall be installed after construction dirt has been removed from the building, and the ducts, plenum, casings, and other items specified have been vacuum cleaned. System shall be maintained in this clean condition until final acceptance. Bearings shall be properly lubricated with oil or grease as recommended by the

manufacturer. Belts shall be tightened to proper tension. Control valves and other miscellaneous equipment requiring adjustment shall be adjusted to setting indicated or directed. Fans shall be adjusted to the speed indicated by the manufacturer to meet specified conditions.

3.7 FUEL SYSTEM TESTS

3.7.1 Gas System Test

The gas fuel system shall be tested in accordance with the test procedures outlined in NFPA 54.

3.8 FIELD TRAINING

The Contractor shall conduct a training course for the operating staff as designated by the Contracting Officer. The training period shall consist of a total of 16 hours of normal working time and shall start after the system is functionally completed but prior to final acceptance tests. The field instructions shall cover all of the items contained in the operating and maintenance instructions, as well as demonstrations of routine maintenance operations and boiler safety devices. The Contracting Officer shall be notified at least 14 days prior to date of proposed conduction of the training course.

-- End of Section --

SECTION TABLE OF CONTENTS

DIVISION 15 - MECHANICAL

SECTION 15650

CENTRAL REFRIGERATED AIR-CONDITIONING SYSTEM

07/92

PART 1 GENERAL

1.1 REFERENCES
1.2 SYSTEM DESCRIPTION
1.3 SUBMITTALS
1.4 QUALIFICATIONS
1.5 SAFETY REQUIREMENTS
1.6 DELIVERY, STORAGE, AND HANDLING
1.7 PROJECT/SITE CONDITIONS
1.7.1 Verification of Dimensions
1.7.2 Drawings

PART 2 PRODUCTS

2.1 STANDARD PRODUCTS
2.2 NAMEPLATES
2.3 ELECTRICAL WORK
2.4 MATERIALS
2.4.1 Gaskets
2.4.2 Bolts and Nuts
2.4.3 Escutcheons
2.4.4 Pipe Hangers, Inserts, and Supports
2.4.5 Gauges
2.5 REFRIGERATION SYSTEM
2.5.1 Liquid-Chilling Package; Reciprocating or Scroll
2.5.1.1 Capacity Criteria
2.5.1.2 Controls Package
2.5.1.3 Base
2.5.1.4 Refrigerant Circuit
2.6 SYSTEM COMPONENTS
2.6.1 Refrigerant and Oil
2.6.2 Compressor(s)
2.6.2.1 Reciprocating Compressor(s)
2.6.2.2 Scroll Compressor(s)
2.6.3 Compressor Driver, Electric Motor
2.6.4 Compressor Driver Connections
2.6.5 Liquid Cooler
2.6.6 Air-Cooled Condenser and Condensing Section
2.6.6.1 Sizing
2.6.6.2 Construction
2.6.6.3 Operation
2.6.6.4 Condenser Coil
2.6.6.5 Fans
2.6.6.6 Condenser Casing
2.6.6.7 Refrigerant Storage
2.7 ACCESSORIES

2.7.1 Pumps
2.7.1.1 Construction
2.7.1.2 Mechanical Shaft Seals
2.7.1.3 Stuffing-Box Type Seals
2.7.2 Expansion Tanks
2.7.3 Air Separator Tanks
2.7.4 Insulation
2.7.4.1 Field Installed Insulation
2.7.4.2 Factory Installed Insulation
2.8 PIPING COMPONENTS
2.8.1 Water Piping and Fittings
2.8.1.1 Steel Pipe
2.8.1.2 Steel Pipe Joints and Fittings
2.8.1.3 Copper Tube
2.8.1.4 Copper Tube Joints and Fittings
2.8.2 Water Piping Valves and Accessories
2.8.2.1 Gate Valves
2.8.2.2 Globe and Angle Valves
2.8.2.3 Check Valves
2.8.2.4 Butterfly Valves
2.8.2.5 Plug Valves
2.8.2.6 Ball Valves
2.8.2.7 Calibrated Balancing Valves
2.8.2.8 Air Vents
2.8.2.9 Strainers
2.8.2.10 Combination Strainer and Suction Diffuser
2.8.2.11 Backflow Preventers
2.8.2.12 Flexible Pipe Connectors
2.8.2.13 Pressure Gauges
2.8.2.14 Thermometers
2.8.2.15 Pipe Nipples
2.8.2.16 Pipe Unions
2.8.2.17 Solder
2.8.2.18 Gauge Cocks
2.9 FABRICATION
2.9.1 Factory Coating
2.9.2 Field Painting
2.9.2.1 Color Coding
2.10 SUPPLEMENTAL COMPONENTS\SERVICES
2.10.1 Drain and Makeup Water Piping
2.10.2 Chilled Water Storage Tank

PART 3 EXECUTION

3.1 INSTALLATION
3.1.1 Refrigeration System
3.1.1.1 Automatic Controls
3.1.2 General Piping Installation
3.1.2.1 Brazed Joints
3.1.2.2 Threaded Joints
3.1.2.3 Welded Joints
3.1.2.4 Flanged Joints
3.1.2.5 Flared Connections
3.1.2.6 Thermometers
3.1.2.7 Supports
3.1.2.8 Pipe Hangers, Inserts, and Supports
3.1.2.9 Pipe Sleeves
3.1.3 Water Piping
3.1.3.1 Directional Changes

3.1.3.2 Functional Requirements
3.1.3.3 Valves
3.1.3.4 Air Vents
3.1.3.5 Drains
3.1.3.6 Flexible Pipe Connectors
3.1.3.7 Flanges and Unions
3.1.4 Field Applied Insulation
3.1.5 Factory Applied Insulation
3.1.5.1 Refrigerant Suction Lines
3.1.5.2 Liquid Coolers
3.2 TESTS
3.2.1 Field Tests
3.2.1.1 Water Pipe Testing
3.3 CLEANING AND ADJUSTING
3.3.1 Piping
3.3.2 Equipment
3.4 DEMONSTRATIONS

-- End of Section Table of Contents --

SECTION 15650

CENTRAL REFRIGERATED AIR-CONDITIONING SYSTEM
07/92

PART 1 GENERAL

1.1 REFERENCES

The publications listed below form a part of this specification to the extent referenced. The publications are referred to in the text by basic designation only.

AIR CONDITIONING AND REFRIGERATION INSTITUTE (ARI)

ARI 210/240	(1989) Unitary Air-Conditioning and Air-Source Heat Pump Equipment
ARI 365	(1987) Commercial and Industrial Unitary Air-Conditioning Condensing Units
ARI 460	(1994) Remote Mechanical-Draft Air-Cooled Refrigerant Condensers
ARI 550	(1992) Centrifugal or Rotary Screw Water-Chilling Packages
ARI 590	(1992) Reciprocating Water-Chilling Packages

AMERICAN SOCIETY FOR TESTING AND MATERIALS (ASTM)

ASTM A 53	(1993a) Pipe, Steel, Black and Hot-Dipped, Zinc-Coated Welded and Seamless
ASTM A 181	(1994) Forgings, Carbon Steel, for General-Purpose Piping
ASTM A 193	(1994b) Alloy-Steel and Stainless Steel Bolting Materials for High-Temperature Service
ASTM A 234	(1994) Piping Fittings of Wrought Carbon Steel and Alloy Steel for Moderate and Elevated Temperatures
ASTM A 307	(1994) Carbon Steel Bolts and Studs, 60 000 PSI Tensile Strength
ASTM A 733	(1993) Welded and Seamless Carbon Steel and Austenitic Stainless Steel Pipe Nipples
ASTM B 32	(1993) Solder Metal
ASTM B 62	(1993) Composition Bronze or Ounce Metal Castings

ASTM B 75	(1993) Seamless Copper Tube
ASTM B 88	(1993a) Seamless Copper Water Tube
ASTM B 117	(1994) Operating Salt Spray (Fog) Testing Apparatus
ASTM D 520	(1984; R 1989) Zinc Dust Pigment
ASTM C 534	(1994) Preformed Flexible Elastomeric Cellular Thermal Insulation in Sheet and Tubular Form
ASTM D 3308	(1991) PTFE Resin Skived Tape
ASTM F 104	(1993) Nonmetallic Gasket Materials

AMERICAN SOCIETY OF HEATING, REFRIGERATING AND AIR-CONDITIONING ENGINEERS (ASHRAE)

ASHRAE 15	(1994) Safety Code for Mechanical Refrigeration

AMERICAN SOCIETY OF MECHANICAL ENGINEERS (ASME)

ASME B1.20.1	(1983; R 1992) Pipe Threads, General Purpose (Inch)
ASME B16.5	(1988; Errata Oct 88; B16.5a) Pipe Flanges and Flanged Fittings
ASME B16.9	(1993) Factory-Made Wrought Steel Buttwelding Fittings
ASME B16.11	(1991) Forged Fittings, Socket-Welding and Threaded
ASME B16.18	(1984) Cast Copper Alloy Solder Joint Pressure Fittings
ASME B16.21	(1992) Nonmetallic Flat Gaskets for Pipe Flanges
ASME B16.22	(1989) Wrought Copper and Copper Alloy Solder Joint Pressure Fittings
ASME B16.26	(1988) Cast Copper Alloy Fittings for Flared Copper Tubes
ASME B16.39	(1986) Malleable Iron Threaded Pipe Unions Classes 150, 250, and 300
ASME B31.1	(1992; B31.1a; B31.1b; B31.1c) Power Piping
ASME B31.5	(1992; B31.5a) Refrigeration Piping
ASME B40.1	(1991) Gauges - Pressure Indicating Dial Type - Elastic Element

ASME BPV VIII Div 1	(1992; Addenda Dec 1992, Dec 1993, Dec 1994) Boiler and Pressure Vessel Code; Section VIII, Pressure Vessels Division 1 - Basic Coverage
ASME BPV IX	(1992; Addenda Dec 1992, Dec 1993, Dec 1994) Boiler and Pressure Vessel Code; Section IX, Welding and Brazing Qualifications

AMERICAN WELDING SOCIETY (AWS)

AWS D1.1	(1994) Structural Welding Code - Steel

FEDERAL SPECIFICATIONS (FS)

FS BB-F-1421	(Rev B) Fluorocarbon Refrigerants
FS WW-V-35	(Rev C) Valve, Ball

HYDRAULIC INSTITUTE (HI)

HI-01	(1983) Standards for Centrifugal, Rotary, and Reciprocating Pumps

MANUFACTURERS STANDARDIZATION SOCIETY OF THE VALVE AND FITTINGS INDUSTRY (MSS)

MSS SP-25	(1993) Standard Marking System for Valves, Fittings, Flanges and Unions
MSS SP-58	(1993) Pipe Hangers and Supports - Materials, Design and Manufacture
MSS SP-67	(1990) Butterfly Valves
MSS SP-69	(1991) Pipe Hangers and Supports - Selection and Application
MSS SP-70	(1990) Cast Iron Gate Valves, Flanged and Threaded Ends
MSS SP-71	(1990) Cast Iron Swing Check Valves, Flanges and Threaded Ends
MSS SP-78	(1987; R 1992) Cast Iron Plug Valves, Flanged and Threaded Ends
MSS SP-80	(1987) Bronze Gate, Globe, Angle and Check Valves
MSS SP-85	(1994) Cast Iron Globe & Angle Valves, Flanged and Threaded Ends
NEMA 250	(1991) Enclosures for Electrical Equipment (1000 Volts Maximum)

NEMA MG 1 (1993) Motors and Generators

NATIONAL FIRE PROTECTION ASSOCIATION (NFPA)

NFPA 90A (1993) Installation of Air Conditioning and Ventilating Systems

1.2 SYSTEM DESCRIPTION

This specification section covers the provisions and installation procedures necessary for a complete and totally functional refrigerant system. The system shall be provided and installed with all necessary System Components, Accessories, Piping Components, and Supplemental Components\Services.

1.3 SUBMITTALS

Government approval is required for submittals with a "GA" designation; submittals having an "FIO" designation are for information only. The following shall be submitted in accordance with Section 01300 SUBMITTAL PROCEDURES:

SD-01 Data

Central Refrigerated Air-Conditioning System; GA.

Manufacturer's catalog data, at least 5 weeks prior to beginning construction, shall be highlighted to show model #, size, options, performance charts and curves, etc. in adequate detail to demonstrate compliance with contract requirements. Data shall include manufacturer's recommended installation instructions and procedures. Data shall be adequate to demonstrate compliance with contract requirements as specified within the paragraphs:

a. Refrigeration System
b. System Components
c. Accessories
d. Piping Components

If vibration isolation is specified for a unit, vibration isolator literature shall be included containing catalog cuts and certification that the isolation characteristics of the isolators provided meet the manufacturer's recommendations.

Water Treatment Systems; GA.

Six complete copies, at least 5 weeks prior to the purchase of the water treatment system, of the proposed water treatment plan including a layout, control scheme, a list of existing make-up water conditions including the items listed in Paragraph Water Analysis, a list of chemicals, the proportion of chemicals to be added, the final treated water conditions, and a description of environmental concerns for handling the chemicals.

Spare Parts; FIO.

Spare parts data for each different item of material and equipment specified, after approval of the detail drawings and not later than 3 months prior to the date of beneficial occupancy. The data shall include a complete list of parts and supplies, with source of supply.

Qualifications; FIO.

Six copies of qualified procedures, and list of names and identification symbols of qualified welders and welding operators, prior to non-factory welding operations.

SD-04 Drawings

Central Refrigerated Air-Conditioning System ; GA.

Drawings, at least 5 weeks prior to beginning construction, shall provide adequate detail to demonstrate compliance with contract requirements. Drawings shall consist of:

a. Equipment layouts which identify assembly and installation details.
b. Piping layouts which identify all valves and fittings.
c. Plans and elevations which identify clearances required for maintenance and operation.
d. Wiring diagrams which identify each component individually and all interconnected or interlocked relationships between components.
e. Foundation drawings, bolt-setting information, and foundation bolts prior to concrete foundation construction for all equipment indicated or required to have concrete foundations.
f. Details, if piping and equipment are to be supported other than as indicated, which include loadings and type of frames, brackets, stanchions, or other supports.

SD-06 Instructions

Posted Instructions; FIO.

Posted instructions, at least 2 weeks prior to construction completion, shall include equipment layout, wiring and control diagrams, piping, valves and control sequences, and typed condensed operation instructions. The condensed operation instructions shall include preventative maintenance procedures, methods of checking the system for normal and safe operation, and procedures for safely starting and stopping the system. The posted instructions shall be framed under glass or laminated plastic and be posted where indicated by the Contracting Officer.

SD-07 Schedules

Tests; GA.

Schedules, at least 2 weeks prior to the factory test, which identify the date, time, and location for each test. Schedules shall be submitted for both the Chiller Performance Test and the Chiller Sound Test. The Chiller Performance Test schedule shall also allow the witnessing of the test by a Government Representative.

Tests; GA.

Test schedules, at least 2 weeks prior to the start of related testing, for each of the field tests, the system performance tests, and the condenser water quality tests. The schedules shall identify the date, time, and location for each test.

Demonstrations; GA.

A schedule, at least 2 weeks prior to the date of the proposed training course, which identifies the date, time, and location for the training.

SD-08 Statements

Verification of Dimensions; FIO.

A letter, at least 2 weeks prior to beginning construction, including the date the site was visited, conformation of existing conditions, and any discrepancies found.

SD-09 Reports

Field Tests; GA.

Six copies of the report shall be provided in bound 8 1/2 by 11 inch booklets. Reports shall document all phases of tests performed during the Water Pipe Testing, the Refrigerant Pipe Testing, and the Cooling Tower Tests. The report shall include initial test summaries, all repairs/adjustments made, and the final test results.

System Performance Tests; GA.

Six copies of the report shall be provided in bound 8 1/2 by 11 inch booklets. The report shall document compliance with the specified performance criteria upon completion and testing of the system. The report shall indicate the number of days covered by the tests and any conclusions as to the adequacy of the system. The report shall also include the following information and shall be taken at least three different times at outside dry-bulb temperatures that are at least 5 degrees F apart:

a. Date and outside weather conditions.
b. The load on the system based on the following:
   (1) The refrigerant used in the system.
   (2) Condensing temperature and pressure.
   (3) Suction temperature and pressure.
   (4) Running current, voltage and proper phase sequence for each phase of all motors.
   (5) The actual on-site setting of all operating and safety controls.
   (6) Chilled water quantity and temperature in and out of the chiller.
   (7) The position of the capacity-reduction gear at machine off, one-third loaded, one-half loaded, two-thirds loaded, and fully loaded.

Inspections; GA.

Test report, at the completion of one year of service, in bound 8 1/2 by 11 inch booklets. The report shall identifying the condition of the cooling tower and condenser. The report shall also include a comparison of the condition of the cooling tower and condenser with the manufacturer's recommended operating conditions.

SD-13 Certificates

Central Refrigerated Air-Conditioning System; FIO.

Where the system, components, or equipment are specified to comply with

requirements of ARI, ASHRAE, ASME, or UL, proof of such compliance shall be provided. The label or listing of the specified agency shall be acceptable evidence. In lieu of the label or listing, a written certificate from an approved, nationally recognized testing organization equipped to perform such services, stating that the items have been tested and conform to the requirements and testing methods of the specified agency may be submitted.

When performance requirements of this project's drawings and specifications vary from standard ARI rating conditions, computer printouts, catalog, or other application data certified by ARI or a nationally recognized laboratory as described above shall be included. If ARI does not have a current certification program that encompasses such application data, the manufacturer may self certify that his application data complies with project performance requirements in accordance with the specified test standards.

SD-19 Operation and Maintenance Manuals

Operation Manual; FIO.

Six complete copies of an operation manual in bound 8 1/2 by 11 inch booklets listing step-by-step procedures required for system startup, operation, and shutdown. The booklets shall include the manufacturer's name, model number, and parts list. The manuals shall include the manufacturer's name, model number, service manual, and a brief description of all equipment and their basic operating features.

Maintenance Manual; FIO.

Six complete copies of maintenance manual in bound 8 1/2 by 11 inch booklets listing routine maintenance procedures, possible breakdowns and repairs, and a trouble shooting guide. The manuals shall include piping and equipment layouts and simplified wiring and control diagrams of the system as installed.

Water Treatment System; GA.

Six complete copies of operating and maintenance manuals for the step-by-step water treatment procedures. The manuals shall include testing procedures used in determining water quality.

1.4 QUALIFICATIONS

Piping shall be welded in accordance with the qualified procedures using performance qualified welders and welding operators. Procedures and welders shall be qualified in accordance with ASME BPV IX. Welding procedures qualified by others, and welders and welding operators qualified by another employer may be accepted as permitted by ASME B31.1. The Contracting Officer shall be notified 24 hours in advance of tests and the tests shall be performed at the work site if practical. The welder or welding operator shall apply his assigned symbol near each weld he makes as a permanent record.

1.5 SAFETY REQUIREMENTS

Exposed moving parts, parts that produce high operating temperature, parts which may be electrically energized, and parts that may be a hazard to operating personnel shall be insulated, fully enclosed, guarded, or fitted with other types of safety devices. Safety devices shall be installed so that proper operation of equipment is not impaired. Catwalk, ladder, and

guardrail shall be provided where indicated and in accordance with Section 05500 MISCELLANEOUS METAL.

1.6 DELIVERY, STORAGE, AND HANDLING

All equipment delivered and placed in storage shall be stored with protection from the weather, humidity and temperature variations, dirt and dust, or other contaminants.

1.7 PROJECT/SITE CONDITIONS

1.7.1 Verification of Dimensions

The Contractor shall become familiar with all details of the work, verify all dimensions in the field, and shall advise the Contracting Officer of any discrepancy before performing any work.

1.7.2 Drawings

Because of the small scale of the drawings, it is not possible to indicate all offsets, fittings, and accessories that may be required. The Contractor shall carefully investigate the plumbing, fire protection, electrical, structural and finish conditions that would affect the work to be performed and shall arrange such work accordingly, furnishing required offsets, fittings, and accessories to meet such conditions.

PART 2 PRODUCTS

2.1 STANDARD PRODUCTS

Materials and equipment shall be standard products of a manufacturer regularly engaged in the manufacturing of such products, which are of a similar material, design and workmanship. The standard products shall have been in satisfactory commercial or industrial use for two years prior to bid opening. The two-year use shall include applications of equipment and materials under similar circumstances and of similar size. The two years experience shall be satisfactorily completed by a product which has been sold or is offered for sale on the commercial market through advertisements, manufacturer's catalogs, or brochures. Products having less than a two-year field service record shall be acceptable if a certified record of satisfactory field operation, for not less than 6000 hours exclusive of the manufacturer's factory tests, can be shown. All products shall be supported by a service organization. The Contractor shall submit a certified list of qualified permanent service organizations for support of the equipment which includes their addresses and qualifications. These service organizations shall be reasonably convenient to the equipment installation and shall be able to render satisfactory service to the equipment on a regular and emergency basis during the warranty period of the contract.

2.2 NAMEPLATES

Each major component of equipment shall have the manufacturer's name, address, type or style, and catalog or serial number on a plate securely attached to the item of equipment. Nameplates shall be provided for:

a. Liquid-Chilling Package(s)
b. Pump(s)
c. Pump Motor(s)

d. Expansion Tanks
e. Air Separator Tanks

2.3 ELECTRICAL WORK

Electrical equipment, motors, motor efficiencies, and wiring shall be in accordance with Section 16415 ELECTRICAL WORK, INTERIOR. Electrical motor driven equipment specified shall be provided complete with motors, motor starters, and controls. Electrical characteristics and enclosure type shall be as shown, and unless otherwise indicated, all motors of 1 horsepower and above with open, dripproof, or totally enclosed fan cooled enclosures, shall be high efficiency type. Field wiring shall be in accordance with manufacturer's instructions. Each motor shall conform to NEMA MG 1 and be of sufficient size to drive the equipment at the specified capacity without exceeding the nameplate rating of the motor. All motors shall be continuous duty with the enclosure specified. Motor starters shall be provided complete with thermal overload protection and other appurtenances necessary for the motor control indicated. Motors shall be furnished with a magnetic across-the-line or reduced voltage type starter as required by the manufacturer. Motor starter shall be provided with NEMA 1 enclosures. Manual or automatic control and protective or signal devices required for the operation specified and any control wiring required for controls and devices specified, but not shown, shall be provided.

2.4 MATERIALS

2.4.1 Gaskets

Gaskets shall conform to ASTM F 104 - classification for compressed sheet with nitrile binder and acrylic fibers for maximum 700 degrees F service.

2.4.2 Bolts and Nuts

Bolts and nuts, except as required for piping applications, shall be in accordance with ASTM A 307. The bolt head shall be marked to identify the manufacturer and the standard with which the bolt complies in accordance with ASTM A 307.

2.4.3 Escutcheons

Escutcheons shall be chromium-plated iron or chromium-plated brass, either one piece or split pattern, held in place by internal spring tension or set screws.

2.4.4 Pipe Hangers, Inserts, and Supports

Pipe hangers, inserts, and supports shall conform to MSS SP-58 and MSS SP-69.

2.4.5 Gauges

Gauges shall conform to ASME B40.1, Class 1, 2, or 3, Style X, Type I or III as required, 4-1/2 inches in diameter with phenolic or metal case.

2.5 REFRIGERATION SYSTEM

2.5.1 Liquid-Chilling Package; Reciprocating or Scroll

Reciprocating or scroll unit shall be designed, fitted, tested, and rated in accordance with ARI 590 and shall meet all the requirements of ASHRAE 15.

Entire unit shall be factory assembled, completely piped and wired except for units with remote condensers. Single packaged units shall be charged with refrigerant and oil ready for operation after connection to utilities. The unit shall include the following components as defined in paragraph SYSTEM COMPONENTS:

a. Refrigerant and Oil
b. Reciprocating or Scroll Compressor
c. Compressor Driver, Electric Motor
d. Compressor Driver Connections
e. Liquid Cooler
f. Integral Air-Cooled Condenser
g. All customary auxiliaries deemed necessary by the manufacturer for safe, controlled, automatic operation of the equipment

2.5.1.1 Capacity Criteria

Unit shall have a minimum Energy Efficiency Ratio as shown on drawings at full load rating in accordance with ARI 590.

2.5.1.2 Controls Package

Each water-chilling unit shall be provided with operating and safety controls of the electric, electronic, pneumatic electric or pneumatic type. The Contractor shall properly coordinate the chiller control system with the temperature-control system specified in Section 15895 AIR SUPPLY, DISTRIBUTION, VENTILATION, AND EXHAUST SYSTEM and 15950 HEATING, VENTILATING AND AIR CONDITIONING HVAC CONTROL SYSTEMS. Temperature sensing elements shall be located as recommended by the manufacturer as shown on the drawings. Capacity reduction may be provided by cylinder unloading, by sequence operation of two or more, but shall not exceed four compressors per circuit, or by a combination of both methods. Each unit shall be provided with a factory-piped and -wired control panel fitted with:

a. A refrigerant discharge pressure and suction pressure gauge
b. A separate high-pressure cut-out with manual reset
c. A low-temperature cutout
d. Entering and leaving chilled water cutout
e. Any other relays or appurtenances necessary for safe, controlled chiller operation
j. System capacity control, pressure or temperature actuated, on systems over 10 tons to adjust the unit capacity in accordance with the system load, and to manually re-set the system on power interruption.

2.5.1.3 Base

Unit shall be mounted on a structural steel or cast iron base. Compressors shall be mounted on vibration isolators. The entire unit shall be isolated from the building structure on vibration isolators with published load ratings. Vibration isolators shall have isolation characteristics as recommended by the manufacturer for the unit supplied and the service intended.

2.5.1.4 Refrigerant Circuit

Each circuit shall include combination filter and drier, combination sight glass and moisture indicator, liquid-line solenoid valve, thermostatic expansion valve with external equalizer, and superheat adjustment.

2.6 SYSTEM COMPONENTS

2.6.1 Refrigerant and Oil

All refrigerants shall be one of the fluorocarbon gases, be in accordance with FS BB-F-1421, and have an Ozone Depletion Potential of less than or equal to 0.05. The unit shall be factory leak tested and dehydrated. Where factory does not precharge the system, Contractor shall provide and install a complete charge of refrigerant and oil required for the installed system as recommended by the manufacturer.

2.6.2 Compressor(s)

2.6.2.1 Reciprocating Compressor(s)

All rotating parts shall be statically and dynamically balanced at the factory to minimize vibration. Compressors shall be capable of operating at partial-load conditions without increased vibration over the normal vibration at full load operation and shall be capable of continuous operation down to the lowest step of unloading as specified. Compressors of size 10 horsepower and above shall have an oil lubrication system of the reversible, forced-feed type with oil strainer. Shaft seal in open-type units shall be mechanical type. Piston speed for open-type compressors shall not exceed the manufacturer's recommendation or 1200 fpm, whichever is less. Compressors shall include:

a. Vertical, V, W, or radial cylinder design
b. Oil lubrication
c. Integrally cast block of close-grained iron or cast aluminum block with hardened steel cylinder sleeves
d. Oil-level bull's eye
e. Cast cylinder heads
f. Cast-aluminum or forged-steel connecting rods
g. Cast iron or forged-steel crankshaft
h. Main bearings of the sleeve-insert type
i. Crankcase oil heaters controlled as recommended by the manufacturer
j. Suction and discharge refrigerant service valves that are flange connected, wrench operated, with cap
k. A strainer on the suction side of the compressor
l. A hot-gas muffler to reduce vibration and noise from pulsations

2.6.2.2 Scroll Compressor(s)

Compressors shall be of the compliant, hermetically sealed design. Compressors shall be mounted on vibration isolators to minimize vibration and noise. Rotating parts shall be statically and dynamically balanced at the factory to eliminate vibration. Lubrication system shall be centrifugal pump type equipped with an oil level bull's eye sight glass and an oil charging valve. Crankcase oil heater shall be provided if standard or if available as an option. If provided, the crankcase oil heater shall be controlled as recommended by the manufacturer.

2.6.3 Compressor Driver, Electric Motor

Motor starter shall be unit mounted remote mounted as indicated with starter type, wiring, and accessories coordinated by the manufacture of the chiller. The compressor(s) shall be driven by an electric motor that has a maximum speed of 3,600 rpm. Motor shall be of the constant-speed,

squirrel-cage induction, open enclosure, or hermetically sealed, normal- or high-torque type as required by the compressor manufacturer to adequately bring the compressor up to full operating speed without damaging the equipment. Motor shall be furnished with magnetic across-the-line or reduced-voltage motor starter as required by the unit manufacturer to limit unit total instantaneous-current flow during start-up. Motor starter shall be provided with NEMA 1 enclosures with an integral circuit breaker which trips the breaker when the starter door is opened. Hermetically sealed motors shall be refrigerant-gas cooled. Wiring shall be as recommended by the compressor manufacturer to provide completely automatic operation of the system. Motors shall be protected against running overload and motor-winding temperature overloads. All compressors shall be protected from rapid on-off cycling by a 20-minute time-delay switch initiated by unit shutdown with an adjustable time delay. Motor controller shall be suitable for starting compressor motor intermittently at 20 minute intervals continuously without damage to controller.

2.6.4 Compressor Driver Connections

Each compressor shall be driven by a V-belt drive or direct connected through a flexible coupling, except that flexible coupling is not required on hermetic units. V-belt drives shall be designed for not less than 150 percent of the driving motor capacity. Flexible couplings shall be of the type that does not require lubrication.

2.6.5 Liquid Cooler

Liquid coolers shall be designed, fitted, and rated in accordance with ARI 590 for reciprocating and scroll compressors and ARI 550 for centrifugal or rotary screw compressors. Coolers shall be designed, constructed, tested, and certified in accordance with ASME BPV VIII Div 1 as applicable, and shall comply with the provisions of ASHRAE 15. Liquid coolers shall be designed for waterside working pressures not less than 150 psig. Liquid coolers shall be of the removable or fixed-tube bundle type. Tubes shall be seamless copper, plain, integrally finned with smooth bore or integrally finned with enhanced bore. Nominal tube thickness shall be no less than 0.028 inches. Each tube shall be individually replaceable. Tubes shall be installed into carbon mild steel tube sheets by rolling. Tube baffles shall be carbon mild steel properly spaced to provide adequate tube support, and cross flow liquid cooler feed control shall be complete and designed to feed the cooler at all levels of capacity from 100 percent down to minimum required operating level. Performance shall be based on a water velocity not less than 3 fps nor more than 12 fps and fouling factor of 0.00025 sq. ft.-hour-degree F/btu.

2.6.6 Air-Cooled Condenser and Condensing Section

2.6.6.1 Sizing

Sizing of the condenser for full capacity at design conditions shall be based on the temperature difference between the entering outside air and the condensing refrigerant for systems with stand-alone condensers that are not part of a manufacturer matched combination and cataloged system. Sizing of all other condensers for full capacity at design conditions shall be based on a maximum of 30 degrees F temperature difference between the entering outside air and condensing refrigerant.

2.6.6.2 Construction

Air-Cooled condenser shall be designed, fitted, tested, and rated in accordance with ARI 210/240, ARI 365, ARI 460, or ARI 590 as applicable and shall meet the requirements of ASHRAE 15. Condenser shall be an integral part of the liquid-chilling package unit. Air-cooled condenser shall be a complete factory-fabricated and assembled unit, consisting of coils, fans, and electric-motor drive. Unless the condenser coil is completely protected through inherent design, screens shall be provided by the manufacturer to prevent physical damage to the coil.

2.6.6.3 Operation

Saturated refrigerant condensing temperature shall not be over 130 degrees F unless the system can meet the unit efficiency specified on the drawings at the provided condensing temperature, in which case the manufacturer shall certify that the condenser and associated equipment are designed for the submitted condensing temperature. The saturated condensing temperature shall not exceed 145 degrees F in either case. Entering dry bulb outside design air temperature shall be as indicated. For those periods when the refrigeration system will operate over design conditions, the equipment shall be capable of operating continuously at 10 degrees F above stated outside design air temperature without damage or shutdown of the compressor motor or shutdown of the refrigeration system by safety devices.

2.6.6.4 Condenser Coil

Condenser coil shall be of the extended-surface fin-and-tube type and shall be constructed of seamless copper tubes with compatible copper or aluminum fins. Fins shall be soldered or mechanically bonded to the tubes and installed in a metal casing. Coil shall be tested after assembly at pressure specified in ASHRAE 15 for the refrigerant employed in the system.

2.6.6.5 Fans

Fans shall be centrifugal or propeller type as best suited for the application. Fans shall be direct or V-belt driven. Belt drives shall be completely enclosed within the unit casing or equipped with a guard. When belt drive is provided, an adjustable sheave to furnish not less than 20 percent fan-speed adjustment shall be provided. Sheaves shall be selected to provide the capacity indicated at the approximate midpoint of the adjustment. Fans shall be statically and dynamically balanced.

2.6.6.6 Condenser Casing

Condenser casing shall be aluminum not less than 0.080 inch or hot-dip galvanized steel not lighter than 18 gauge. Condensers having horizontal air discharge shall be provided with discharge baffle to direct air upward, constructed of the same material and thickness as the casing.

2.6.6.7 Refrigerant Storage

Air-cooled condenser may be used for refrigerant storage in lieu of a separate receiver, if the condenser storage capacity is 5 percent in excess of the fully charged system for packaged air-cooled chillers and air-cooled condensing units with field installed refrigerant piping no longer than recommended by the manufacturer; 20 percent for all air-cooled condensers; and 20 percent for all air-cooled condensing units with field installed piping which is longer than recommended by the manufacturer.

2.7 ACCESSORIES

2.7.1 Pumps

Pumps shall be the electrically driven, non-overloading, centrifugal type which conform to HI-01. Pump capacity, efficiency, motor size, and impeller type shall be as indicated on the drawings. Pumps shall be selected at or near peak efficiency. Pump curve shall rise continuously from maximum capacity to shutoff. Shutoff head shall be approximately 20 percent greater than design head. Pump motor shall be totally enclosed and have sufficient horsepower for the service required. Each pump motor shall be equipped with an across-the-line magnetic controller in a NEMA 250, Type 1 enclosure with "HAND-OFF-AUTO" switch in the cover.

2.7.1.1 Construction

Shaft seal shall be mechanical-seal or stuffing-box type. Impeller shall be statically and dynamically balanced. Each pump casing shall be designed to withstand the discharge head specified plus the static head on system plus 50 percent of the total, but not less than 125 psig. Pump casing and bearing housing shall be close grained cast iron. High points in the casing shall be provided with manual air vents; low points shall be provided with drain plugs. Impeller, impeller wearing rings, glands, casing wear rings, and shaft sleeve shall be bronze. Shaft shall be carbon or alloy steel, turned and ground. Bearings shall be ball-bearings, roller-bearings, or oil-lubricated bronze-sleeve type bearings, and be efficiently sealed or isolated to prevent loss of oil or entrance of dirt or water. Pump and motor shall be mounted on a common cast iron base having lipped edges and tapped drainage openings or structural steel base with lipped edges or drain pan and tapped drainage openings. Pump shall be provided with shaft coupling guard. Pump motor shall have the required capacity to prevent overloading with pump operating at any point on its characteristic curve. The pump speed shall not exceed 1,750 rpm. Pump shall be accessible for servicing without disturbing piping connections.

2.7.1.2 Mechanical Shaft Seals

Seals shall be single, inside mounted, end-face-elastomer bellows type with stainless steel spring, brass or stainless steel seal head, carbon rotating face, and tungsten carbide sealing face. Glands shall be bronze and of the water-flush design to provide lubrication flush across the face of the seal. Bypass line from pump discharge to flush connection in gland shall be provided, with filter or cyclone separator in line.

2.7.1.3 Stuffing-Box Type Seals

Seals shall be single unit construction separate from the casing, secured against rotation. Stuffing box shall include minimum 5 rows of square, graphite braided asbestos packing and a bronze split-lantern ring. Packing gland shall be bronze interlocking split type.

2.7.2 Expansion Tanks

Expansion tanks shall be welded steel, constructed, tested and stamped in accordance with ASME BPV VIII Div 1 for a working pressure of 125 psig and precharged to the minimum operating pressure. Expansion tanks shall have a replaceable diaphragm and be the captive air type. Tanks shall accommodate expanded water of the system generated within the normal operating temperature range, limiting this pressure increase at all components in the system to the maximum allowable pressure at those components. Each tank

air chamber shall be fitted with an air charging valve. Tanks shall be supported by steel legs or bases for vertical installation or steel saddles for horizontal installations. The only air in the system shall be the permanent sealed-in air cushion contained within the expansion tank.

2.7.3 Air Separator Tanks

External air separation tank shall be steel, constructed, tested, and stamped in accordance with ASME BPV VIII Div 1 for a working pressure 125 psig. The chilled water air separator shall not exceed 1.5 psig pressure drop with strainer at 86 gpm. The heat hot water air separator shall not exceed 1.6 psig pressure drop with strainer at 60 gpm.

2.7.4 Insulation

2.7.4.1 Field Installed Insulation

Field installed insulation shall be as specified in Section 15250 THERMAL INSULATION FOR MECHANICAL SYSTEM, except for header and waterbox insulation which shall be flexible cellular insulation in accordance with ASTM C 534, Type I.

2.7.4.2 Factory Installed Insulation

For Liquid-Chilling Packages (Reciprocating or Scroll), insulation shall be provided on all suction piping from the evaporator to the compressor and on the liquid cooler including chilled water boxes or headers.

2.8 PIPING COMPONENTS

2.8.1 Water Piping and Fittings

2.8.1.1 Steel Pipe

Steel pipe shall conform to ASTM A 53, Schedule 40, Type E or S, Grades A or B. Type F pipe shall not be used.

2.8.1.2 Steel Pipe Joints and Fittings

Joints and fittings shall be welded, flanged, or threaded as indicated. If not otherwise indicated, piping 1 inch and smaller shall be threaded; piping larger than 1 inch and smaller than 3 inches shall be either threaded, or welded; and piping 3 inches and larger shall be grooved, welded, or flanged. The manufacturer of each fitting shall be permanently identified on the body of the fitting in accordance with MSS SP-25.

a. Welded Joints and Fittings: Welded fittings shall conform to ASTM A 234, and identified with the appropriate grade and marking symbol. Butt-welding fittings shall conform to ASME B16.9. Socket-welding and threaded fittings shall conform to ASME B16.11.

b. Flanged Joints and Fittings: Flanges shall conform to ASTM A 181 and ASME B16.5 Class 150. Gaskets shall be nonasbestos compressed material in accordance with ASME B16.21, 1/16 inch thickness, full face or self-centering flat ring type. This gaskets shall contain aramid fibers bonded with styrene butadeine rubber (SBR) or nitrile butadeine rubber (NBR). Bolts, nuts, and bolt patterns shall conform to ASME B16.5. Bolts shall be high or intermediate strength material conforming to ASTM A 193.

c. Threaded Joints and Fittings: Threads shall conform to ASME B1.20.1. Pipe nipples shall conform to ASTM A 733, type and material to match adjacent piping. Unions shall conform to ASME B16.39, type as required to match adjacent piping.

d. Dielectric Unions and Flanges: Dielectric unions shall have the tensile strength and dimensional requirements specified. Unions shall have metal connections on both ends threaded to match adjacent piping. Metal parts of dielectric unions shall be separated with a nylon insulator to prevent current flow between dissimilar metals. Unions shall be suitable for the required operating pressures and temperatures. Dielectric flanges shall provide the same pressure ratings as standard flanges and provide complete electrical isolation.

2.8.1.3 Copper Tube

Copper tubing for water service shall conform to ASTM B 88, Type K or L.

2.8.1.4 Copper Tube Joints and Fittings

Wrought copper and bronze solder-joint pressure fittings shall conform to ASME B16.22 and ASTM B 75. Cast copper alloy solder-joint pressure fittings shall conform to ASME B16.18. Cast copper alloy fittings for flared copper tube shall conform to ASME B16.26 and ASTM B 62. Brass or bronze adapters for brazed tubing may be used for connecting tubing to flanges and to threaded ends of valves and equipment. Extracted brazed tee joints produced with an acceptable tool and installed as recommended by the manufacturer may be used.

2.8.2 Water Piping Valves and Accessories

Valves shall be rated for Class 125 and shall be suitable for operating temperature of 250 degrees F. Valves shall be suitable for the working pressure of the pipe in which installed. Valves shall meet the material, fabrication and operating requirements of ASME B31.1. Chain operators shall be provided for valves located 10 feet or higher above the floor. Valves in sizes larger than 1 inch and used on steel pipe systems, may be provided with rigid grooved mechanical joint ends. Such grooved end valves shall be subject to the same requirements as rigid grooved mechanical joints and fittings and, shall be provided by the same manufacturer as the grooved pipe joint and fitting system.

2.8.2.1 Gate Valves

Gate valves 2-1/2 inches and smaller shall conform to MSS SP-80 and shall be bronze with rising stem and threaded, soldered, or flanged ends. Gate valves 3 inches and larger shall conform to MSS SP-70, Type I, II, Class 125, Design OF and shall be cast iron with bronze trim, outside screw and yoke, and flanged or threaded ends.

2.8.2.2 Globe and Angle Valves

Globe and angle valves 2-1/2 inches and smaller shall conform to MSS SP-80 and shall be bronze with threaded, soldered, or flanged ends. Globe and angle valves 3 inches and larger shall conform to MSS SP-85 and shall be cast iron with bronze trim and flanged or threaded ends.

2.8.2.3 Check Valves

Check valves 2-1/2 inches and smaller shall conform to MSS SP-80 and shall be bronze with threaded, soldered, or flanged ends. Check valves 3 inches and larger shall conform to MSS SP-71, Type I, II, III, or IV, Class 125 or 150 and shall be cast iron with bronze trim and flanged or threaded ends.

2.8.2.4 Butterfly Valves

Butterfly valves shall be in accordance with MSS SP-67, Type 1 and shall be 2 flange or lug wafer type, and shall be bubble tight at 150 psig. Valve bodies shall be cast iron, malleable iron, or steel. Valves smaller than 8 inches shall have throttling handles with a minimum of seven locking positions. Valves 8 inches and larger shall have totally enclosed manual gear operators with adjustable balance return stops and position indicators. Valves in insulated lines shall have extended neck to accommodate insulation thickness.

2.8.2.5 Plug Valves

Plug valves 2 inches and larger shall conform to MSS SP-78, have flanged or threaded ends, and have cast iron bodies with bronze trim. Valves 2 inches and smaller shall be bronze with NPT connections for black steel pipe and brazed connections for copper tubing. Valves shall be lubricated, non-lubricated, or tetrafluoroethylene resin-coated type. Valves shall be resilient, double seated, trunnion mounted with tapered lift plug capable of 2-way shutoff. Valves shall operate from fully open to fully closed by rotation of the handwheel to lift and turn the plug. Valves shall a weatherproof operators with mechanical position indicators. Valves 8 inches or larger shall be provided with manual gear operators with position indicators.

2.8.2.6 Ball Valves

Ball valves 1/2 inch and larger shall conform to FS WW-V-35 and shall be ductile iron or bronze with threaded, soldered, or flanged ends. Valves 8 inches or larger shall be provided with manual gear operators with position indicators.

2.8.2.7 Calibrated Balancing Valves

Each valve shall be calibrated so that flow can be determined when the temperature and pressure differential across valve is known. Valves shall have an integral pointer which registers the degree of valve opening. Each valve shall be constructed with internal seals to prevent leakage and shall be supplied with preformed insulation. Valves Cv rating shall be as indicated. Valve bodies shall be provided with tapped openings and pipe extensions with positive shutoff valves outside of pipe insulation. The pipe extensions shall be provided with quick connecting hose fittings for a portable meter to measure the pressure differential. One portable differential meter, suitable for the operating pressure specified, shall be provided. The meter shall be complete with hoses, vent, integral metering connections, and carrying case as recommended by the valve manufacturer.

2.8.2.8 Air Vents

Manual air vents shall be brass or bronze valves or cocks suitable for 125 psig service, and furnished with threaded plugs or caps. Manual air vent shall be located in finished spaces. Automatic air vents shall be float

type, cast iron, stainless steel, or forged steel construction, suitable for 125 psig service. Automatic air vents shall be located in mechanical rooms.

2.8.2.9 Strainers

Basket and "Y" type strainers shall be the same size as the pipelines in which they are installed. The strainer bodies shall be fabricated of cast iron with bottoms drilled, and tapped. Strainers shall be designed for 125 psig and 250 degrees F operating conditions. The bodies shall have arrows clearly cast on the sides indicating the direction of flow. Each strainer shall be equipped with removable cover and sediment screen. The screen shall be made of minimum 22 gauge monel, with small perforations numbering not less than 400 per square inch to provide a net free area through the basket of at least 3.30 times that of the entering pipe. The flow shall be into the screen and out through the perforations.

2.8.2.10 Combination Strainer and Suction Diffuser

A combination strainer and suction diffuser, consisting of an angle type body with removable strainer basket and straightening vanes, a suction pipe support, and a blowdown outlet, shall be provided on pump suction. The combination strainer and suction diffuser shall be designed for a maximum working pressure of 175 psig.

2.8.2.11 Backflow Preventers

Backflow preventers shall be in accordance with Section 15405 PLUMBING, GENERAL PURPOSE.

2.8.2.12 Flexible Pipe Connectors

Flexible pipe connectors shall be designed for 125 psig or 150 psig service as appropriate for the static head plus the system head, and 230 degrees F, for grooved end flexible connectors. The flexible section shall be constructed of rubber, tetrafluoroethylene resin, or corrosion-resisting steel, bronze, monel, or galvanized steel. The flexible section shall be suitable for intended service with end connections to match adjacent piping. Flanged assemblies shall be equipped with limit bolts to restrict maximum travel to the manufacturer's standard limits. Unless otherwise indicated, the length of the flexible connectors shall be as recommended by the manufacturer for the service intended. Internal sleeves or liners, compatible with circulating medium, shall be provided when recommended by the manufacturer. Covers to protect the bellows shall be provided where indicated.

2.8.2.13 Pressure Gauges

Gauges shall conform to ASME B40.1 and shall be provided with throttling type needle valve or a pulsation dampener and shut-off valve. Gauge shall be a minimum of 3-1/2 inches in diameter with a range from 0 psig to approximately 1.5 times the maximum system working pressure.

2.8.2.14 Thermometers

Thermometers shall have brass, malleable iron, or aluminum alloy case and frame, clear protective face, permanently stabilized glass tube with indicating-fluid column, white face, black numbers, and a 9 inch scale. Thermometers shall have rigid stems with straight, angular, or inclined

pattern.

2.8.2.15 Pipe Nipples

Pipe nipples shall be in accordance with ASTM A 733 and be of material to match adjacent piping.

2.8.2.16 Pipe Unions

Pipe unions shall be in accordance with ASME B16.39 and be of material to match adjacent piping.

2.8.2.17 Solder

Solder for water piping shall be in accordance with ASTM B 32, alloy grade 50B.

2.8.2.18 Gauge Cocks

Brass, "T" handle gauge cocks.

2.9 FABRICATION

2.9.1 Factory Coating

Unless otherwise specified, equipment and component items, when fabricated from ferrous metal, shall be factory finished with the manufacturer's standard finish, except that items located outside of buildings shall have weather resistant finishes that will withstand 500 hours exposure to the salt spray test specified in ASTM B 117 using a 5 percent sodium chloride solution. Immediately after completion of the test, the specimen shall show no signs of blistering, wrinkling, cracking, or loss of adhesion and no sign of rust creepage beyond 1/8 inch on either side of the scratch mark. Cut edges of galvanized surfaces where hot-dip galvanized sheet steel is used shall be coated with a zinc-rich coating conforming to ASTM D 520, Type I.

2.9.2 Field Painting

Painting required for surfaces not otherwise specified, and finish painting of items only primed at the factory are specified in Section 09900 PAINTING, GENERAL.

2.9.2.1 Color Coding

Color coding for piping identification is specified in Section 09900 PAINTING, GENERAL.

2.10 SUPPLEMENTAL COMPONENTS\SERVICES

2.10.1 Drain and Makeup Water Piping

Piping shall comply with the requirements of Section 15405 PLUMBING, HOSPITAL. Drains which connect to sanitary sewer system shall be connected by means of an indirect waste.

2.10.2 Chilled Water Storage Tank

Chilled water storage tank shall be welded steel construction, testing, and

stamped in accordance with ASME 16 for a working pressure of 125 psig. Tank shall have an internal baffle and lower tappings to prevent the effects of stratification. Tappings for a top air vent and a lower drain, shall be integral part of the tank. Tank shall be supported by steel legs for vertical installation. Tank shall be complete with phenolic lining. Tank and tapping sizes shall be as shown on the drawings.

PART 3 EXECUTION

3.1 INSTALLATION

All work shall be performed in accordance with the manufacturer's published diagrams, recommendations, and equipment warranty requirements. Where equipment is specified to conform to the requirements of ASME BPV VIII Div 1 and ASME BPV IX, the design, fabrication, and installation of the system shall conform to ASME BPV VIII Div 1 and ASME BPV IX.

3.1.1 Refrigeration System

3.1.1.1 Automatic Controls

Automatic controls for the central refrigeration system specified in paragraph REFRIGERATION SYSTEM shall be provided with the central refrigeration equipment. These controls shall operate automatically to balance the equipment capacity with the load on the air conditioning system, and shall be fully coordinated with and integrated into the temperature control system specified in Section 15895 AIR SUPPLY, DISTRIBUTION, VENTILATION, AND EXHAUST SYSTEM and 15950 HEATING, VENTILATING AND AIR CONDITIONING HVAC CONTROL SYSTEMS.

3.1.2 General Piping Installation

3.1.2.1 Brazed Joints

Before brazing copper joints, both the outside of the tube and the inside of the fitting shall be cleaned with a wire fitting brush until the entire joint surface is bright and clean. Brazing flux shall not be used. Surplus brazing material shall be removed at all joints. Steel tubing joints shall be made in accordance with the manufacturer's recommendations. Joints in steel tubing shall be painted with the same material as the baked-on coating within 8 hours after joints are made. Tubing shall be protected against oxidation during brazing by continuous purging of the inside of the piping using nitrogen. All piping shall be supported prior to brazing and shall not be sprung or forced.

3.1.2.2 Threaded Joints

Threaded joints shall be made with tapered threads and made tight with PTFE tape complying with ASTM D 3308 or equivalent thread-joint compound applied to the male threads only. Not more than three threads shall show after the joint is made.

3.1.2.3 Welded Joints

Welding shall be in accordance with qualified procedures using qualified welders and welding operators. Procedures and welders shall be qualified in accordance with ASME BPV IX. Welding procedures qualified by others, and welders and welding operators qualified by another employer may be accepted as permitted by ASME B31.1. Contracting Officer shall be notified

24 hours in advance of welding tests and the tests shall be performed at the work site if practical. A permanent mark shall be applied near each weld to identify the welder who made that weld. Welded joints in steel refrigerant piping shall be fusion-welded. Changes in direction of piping shall be made with welded fittings only; mitering or notching pipe or other similar construction to form elbows or tees will not be permitted. Branch connections shall be made with welding tees or forged welding branch outlets. Steel pipe shall be thoroughly cleaned of all scale and foreign matter before the piping is assembled. During welding the pipe and fittings shall be filled with an inert gas, such as nitrogen, to prevent the formation of scale. Beveling, alignment, heat treatment, and inspection of weld shall conform to ASME B31.1. Weld defects shall be removed and rewelded at no additional cost to the Government. Electrodes shall be stored and dried in accordance with AWS D1.1 or as recommended by the manufacturer. Electrodes that have been wetted or that have lost any of their coating shall not be used.

3.1.2.4 Flanged Joints

Flanged joints shall be faced true, provided with gaskets suitable for use with refrigerants and made square and tight. When steel refrigerant piping is used, union or flange joints shall be provided in each line immediately preceding the connection to each piece of equipment requiring maintenance, such as compressors, coils, chillers, control valves, and other similar items.

3.1.2.5 Flared Connections

When flared connections are used, a suitable lubricant shall be used between the back of the flare and the nut in order to avoid tearing the flare while tightening the nut.

3.1.2.6 Thermometers

Thermometers shall be located specifically on, but not limited to the following: sensing element of each automatic temperature control device where a thermometer is not an integral part thereof.

3.1.2.7 Supports

a. General: All refrigerant pipe supports shall be in accordance with ASME B31.5. Hangers used to support piping 2 inches and larger shall be fabricated to permit adequate adjustment after erection while still supporting the load. Pipe guides and anchors shall be installed to keep pipes in accurate alignment, to direct the expansion movement, and to prevent buckling, swaying, and undue strain. Piping subjected to vertical movement, when operating temperatures exceed ambient temperatures, shall be supported by variable spring hangers and supports or by constant support hangers.

b. Seismic Requirements: All piping and attached valves shall be supported and braced to resist seismic loads as shown on the drawings. Structural steel required for reinforcement to properly support piping, headers, and equipment but not shown shall be provided under this section. Material used for support shall be as specified under Section 05120 STRUCTURAL STEEL.

c. Structural Attachments: Structural steel brackets required to

support piping, headers, and equipment, but not shown, shall be provided under this section. Material and installation shall be as specified under Section 05120 STRUCTURAL STEEL.

3.1.2.8 Pipe Hangers, Inserts, and Supports

Pipe hangers, inserts, and supports shall conform to MSS SP-58 and MSS SP-69, except as modified herein. Pipe hanger types 5, 12, and 26 shall not be used.

a. Hangers: Type 3 shall not be used on insulated piping.

b. Inserts: Type 18 inserts shall be secured to concrete forms before concrete is placed. Continuous inserts which allow more adjustments may be used if they otherwise meet the requirements for Type 18 inserts.

c. C-Clamps: Type 19 and 23 C-clamps shall be torqued per MSS SP-69 and have both locknuts and retaining devices, furnished by the manufacturer. Field-fabricated C-clamp bodies or retaining devices are not acceptable.

d. Angle Attachments: Type 20 attachments used on angles and channels shall be furnished with an added malleable-iron heel plate or adapter.

e. Hangers: Type 24 may be used only on trapeze hanger systems or on fabricated frames.

f. Saddles and Shields: Where Type 39 saddle or Type 40 shield are permitted for a particular pipe attachment application, the Type 39 saddle, connected to the pipe, shall be used on all pipe 4 inches and larger when the temperature of the medium is 60 degrees F or higher. Type 40 shields shall be used on all piping less than 4 inches and all piping 4 inches and larger carrying medium less than 60 degrees F. A high density insulation insert of cellular glass shall be used under the Type 40 shield for piping 2 inches and larger.

g. Horizontal Pipe Supports: Horizontal pipe supports shall be spaced as specified in MSS SP-69 and a support shall be installed not over 1 foot from the pipe fitting joint at each change in direction of the piping. Pipe supports shall be spaced not over 5 feet apart at valves. Pipe hanger loads suspended from steel joist with hanger loads between panel points in excess of 50 pounds shall have the excess hanger loads suspended from panel points.

h. Vertical Pipe Supports: Vertical pipe shall be supported at each floor, except at slab-on-grade, and at intervals of not more than 15 feet, not more than 8 feet from end of risers, and at vent terminations.

i. Pipe Guides: Type 35 guides using, steel, reinforced polytetrafluoroethylene (PTFE) or graphite slides shall be provided where required to allow longitudinal pipe movement. Lateral restraints shall be provided as required. Slide materials shall be suitable for the system operating temperatures, atmospheric conditions, and bearing loads encountered.

j. Steel Slides: Where steel slides do not require provisions for restraint of lateral movement, an alternate guide method may be used. On piping 4 inches and larger, a Type 39 saddle shall be used. On piping under 4 inches, a Type 40 protection shield may be attached to the pipe or insulation and freely rest on a steel slide plate.

k. Multiple Pipe Runs: In the support of multiple pipe runs on a common base member, a clip or clamp shall be used where each pipe crosses the base support member. Spacing of the base support members shall not exceed the hanger and support spacing required for an individual pipe in the multiple pipe run.

3.1.2.9 Pipe Sleeves

Sleeves shall not be installed in structural members except where indicated or approved. Rectangular and square openings shall be as detailed. Each sleeve shall extend through its respective wall, floor, or roof, and shall be cut flush with each surface. Pipes passing through concrete or masonry wall or concrete floors or roofs shall be provided with pipe sleeves fitted into place at the time of construction. Unless otherwise indicated, sleeves shall be of such size as to provide a minimum of 1/4 inch all-around clearance between bare pipe and sleeves or between jacketed-insulation and sleeves. Sleeves in bearing walls, waterproofing membrane floors, and wet areas shall be steel pipe or cast iron pipe. Sleeves in non-bearing walls, floors, or ceilings may be steel pipe, cast iron pipe, galvanized sheet metal with lock-type longitudinal seam and of the metal thickness indicated, or moisture resistant fiber or plastic. Except in pipe chases or interior walls, the annular space between pipe and sleeve or between jacket over-insulation and sleeve shall be sealed as indicated and specified in Section 07920 JOINT SEALING. Pipes passing through wall waterproofing membrane shall be sleeved as specified above, and a waterproofing clamping flange shall be installed.

3.1.3 Water Piping

Pipe and fitting installation shall conform to the requirements of ASME B31.1. Pipe shall be cut accurately to measurements established at the jobsite, and worked into place without springing or forcing, completely clearing all windows, doors, and other openings. Cutting or other weakening of the building structure to facilitate piping installation will not be permitted without written approval. Pipe or tubing shall be cut square, shall have burrs removed by reaming, and shall permit free expansion and contraction without causing damage to the building structure, pipe, joints, or hangers.

3.1.3.1 Directional Changes

Changes in direction shall be made with fittings, except that bending of pipe 4 inches and smaller will be permitted, provided a pipe bender is used and wide weep bends are formed. The centerline radius of bends shall not be less than 6 diameters of the pipe. Bent pipe showing kinks, wrinkles, flattening, or other malformations will not be accepted.

3.1.3.2 Functional Requirements

Horizontal supply mains shall pitch down in the direction of flow as indicated. The grade shall not be less than 1 inch in 40 feet. Reducing fittings shall be used for changes in pipe sizes. Open ends of pipelines

and equipment shall be capped or plugged during installation to keep dirt or other foreign materials out of the system. Pipe not otherwise specified shall be uncoated. Connections to appliances shall be made with malleable iron unions for steel pipe 2-1/2 inches or less in diameter, and with flanges for pipe 3 inches and above in diameter. Connections between ferrous and copper piping shall be electrically isolated from each other with dielectric unions or flanges. All piping located in air plenums shall conform to NFPA 90A requirements. Pipe and fittings installed in inaccessible conduits or trenches under concrete floor slabs shall be welded.

3.1.3.3 Valves

Isolation gate or ball valves shall be installed on each side of each piece of equipment, at the midpoint of all looped mains, and at any other points indicated or required for draining, isolating, or sectionalizing purpose. Isolation valves may be omitted where balancing cocks are installed to provide both balancing and isolation functions. Each valve except check valves shall be identified. Valves in horizontal lines shall be installed with stems horizontal or above.

3.1.3.4 Air Vents

Air vents shall be provided at all high points, on all water coils, and where indicated to ensure adequate venting of the piping system.

3.1.3.5 Drains

Drains shall be provided at all low points and where indicated to ensure complete drainage of the piping. Drains shall be accessible, and shall consist of nipples and caps or plugged tees unless otherwise indicated.

3.1.3.6 Flexible Pipe Connectors

Preinsulated flexible pipe connectors shall be attached to other components in strict accordance with the latest printed instructions of the manufacturer to ensure a vapor tight joint. Hangers, when required to suspend the connectors, shall be of the type recommended by the flexible pipe connector manufacturer and shall be provided at the intervals recommended.

3.1.3.7 Flanges and Unions

Except where copper tubing is used, union or flanged joints shall be provided in each line immediately preceding the connection to each piece of equipment or material requiring maintenance such as coils, pumps, control valves, and other similar items.

3.1.4 Field Applied Insulation

Field applied insulation other than that specified for water boxes and headers shall be as specified in Section 15250 THERMAL INSULATION FOR MECHANICAL SYSTEMS.

3.1.5 Factory Applied Insulation

3.1.5.1 Refrigerant Suction Lines

Refrigerant suction lines between the cooler and each compressor shall be

insulated with not less than 3/4 inch thick unicellular plastic foam.

3.1.5.2 Liquid Coolers

Liquid coolers (including chilled water headers or boxes), which may have factory or field applied insulation, shall be insulated with unicellular plastic foam. Insulation shall be not less than 3/4 inch thick or have a maximum thermal conductivity of 0.28 Btu/(hr.)(sq. ft.)(degree F.))). In lieu of the above insulation, a 2 inch thickness of urethane foam may be used. Urethane foam shall be completely covered and sealed with a sheet metal jacket not lighter than 20 gauge. Insulation on heads of coolers shall be constructed to provide easy removal and replacement of heads without damage to the insulation.

3.2 TESTS

3.2.1 Field Tests

Tests shall be conducted in the presence of the Contracting Officer. Water and electricity required for the tests will be furnished by the Government. Any material, equipment, instruments, and personnel required for the test shall be provided by the Contractor. The services of a qualified technician shall be provided as required to perform all tests and procedures indicated herein.

3.2.1.1 Water Pipe Testing

After cleaning, water piping shall be hydrostatically tested at a pressure equal to 150 percent of the total system operating pressure for period of time sufficient to inspect every joint in the system and in no case less than 2 hours. Leaks shall be repaired and piping retested until test is successful. No loss of pressure shall be allowed. Leaks shall be repaired by rewelding or replacing pipe or fittings. Caulking of joints will not be permitted. Concealed and insulated piping shall be tested in place before concealing.

3.3 CLEANING AND ADJUSTING

3.3.1 Piping

Pipes shall be cleaned free of scale and thoroughly flushed of all foreign matter. A temporary bypass shall be provided for all water coils to prevent flushing water from passing through coils. Strainers and valves shall be thoroughly cleaned. Prior to testing and balancing, air shall be removed from all water systems by operating the air vents. Temporary measures, such as piping the overflow from vents to a collecting vessel shall be taken to avoid water damage during the venting process. Air vents shall be plugged or capped after the system has been vented.

3.3.2 Equipment

Equipment shall be wiped clean, with all traces of oil, dust, dirt, or paint spots removed. Temporary filters shall be provided for all fans that are operated during construction, and new filters shall be installed after all construction dirt has been removed from the building. System shall be maintained in this clean condition until final acceptance. Bearings shall be properly lubricated with oil or grease as recommended by the manufacturer. Belts shall be tightened to proper tension. Control valves and other miscellaneous equipment requiring adjustment shall be adjusted to

setting indicated or directed. Fans shall be adjusted to the speed indicated by the manufacturer to meet specified conditions.

3.4 DEMONSTRATIONS

Contractor shall conduct a training course for the operating staff as designated by the Contracting Officer. The training period shall consist of a total 12 hours of normal working time and start after the system is functionally completed but prior to final acceptance tests. The field instructions shall cover all of the items contained in the Operation and Maintenance Manuals as well as demonstrations of routine maintenance operations.

-- End of Section --

SECTION TABLE OF CONTENTS

DIVISION 15 - MECHANICAL

SECTION 15895

AIR SUPPLY, DISTRIBUTION, VENTILATION, AND EXHAUST SYSTEM

02/94

PART 1 GENERAL

1.1 REFERENCES
1.2 COORDINATION OF TRADES
1.3 DELIVERY AND STORAGE
1.4 SUBMITTALS

PART 2 PRODUCTS

2.1 STANDARD PRODUCTS
2.2 ASBESTOS PROHIBITION
2.3 NAMEPLATES
2.4 EQUIPMENT GUARDS AND ACCESS
2.5 PIPING COMPONENTS
2.5.1 Insulation
2.5.2 Condensate Drain Lines
2.6 ELECTRICAL WORK
2.7 CONTROLS
2.8 DUCTWORK COMPONENTS
2.8.1 Metal Ductwork
2.8.1.1 Transitions
2.8.1.2 Insulated Nonmetallic Flexible Duct Runouts
2.8.1.3 General Service Duct Connectors
2.8.2 Ductwork Accessories
2.8.2.1 Duct Access Doors
2.8.2.2 Fire Dampers
2.8.2.3 Splitters and Manual Balancing Dampers
2.8.3 Duct Sleeves, Framed Prepared Openings, Closure Collars
2.8.3.1 Duct Sleeves
2.8.3.2 Framed Prepared Openings
2.8.3.3 Closure Collars
2.8.4 Sound Attenuation Equipment
2.8.5 Diffusers, Registers, and Grilles
2.8.5.1 Diffusers
2.8.5.2 Registers and Grilles
2.8.6 Louvers
2.8.7 Bird Screens and Frames
2.9 AIR SYSTEMS EQUIPMENT
2.9.1 Fans
2.9.1.1 Centrifugal Fans
2.9.1.2 In-Line Centrifugal Fans
2.9.1.3 Panel Type Power Wall Ventilators
2.9.1.4 Centrifugal Type Power Roof Ventilators
2.9.2 Coils
2.9.2.1 Water Coils
2.9.3 Air Filters

2.9.3.1 Extended Surface Pleated Panel Filters
2.9.3.2 Holding Frames
2.9.3.3 Filter Gauges
2.10 AIR HANDLING UNITS
2.10.1 Field-Fabricated Air Handling Units
2.10.2 Factory-Fabricated Air Handling Units
2.10.2.1 Casings
2.10.2.2 Heating and Cooling Coils
2.10.2.3 Air Filters
2.10.2.4 Fans
2.10.2.5 Access Sections and Filter/Mixing Boxes
2.10.2.6 Dampers
2.11 TERMINAL UNITS
2.11.1 Room Fan-Coil Units
2.11.1.1 Enclosures
2.11.1.2 Fans
2.11.1.3 Coils
2.11.1.4 Drain Pans
2.11.1.5 Filters
2.11.1.6 Motors
2.11.2 Variable Air Volume (VAV) and Constant Volume Terminal Units
2.11.2.1 Constant Volume, Single Duct
2.11.2.2 Variable Volume, Single Duct
2.11.2.3 Reheat Units
2.12 VARIABLE SPEED DRIVES
2.12.1 Variable Speed Drives for Air Handling Units
2.13 FACTORY PAINTING

PART 3 EXECUTION

3.1 INSTALLATION
3.1.1 Condensate Drain Lines
3.1.2 Air Vents and Drains
3.1.2.1 Vents
3.1.2.2 Drains
3.1.3 Valves
3.1.4 Equipment and Installation
3.1.5 Access Panels
3.1.6 Flexible Connectors
3.1.7 Sleeved and Framed Openings
3.1.8 Metal Ductwork
3.1.9 Insulation
3.1.10 Duct Test Holes
3.1.11 Power Roof Ventilator Mounting
3.1.12 Power Transmission Components Adjustment
3.2 FIELD PAINTING AND PIPING IDENTIFICATION
3.3 PIPING HYDROSTATIC TEST
3.4 CLEANING AND ADJUSTING
3.5 TESTING, ADJUSTING, AND BALANCING
3.6 PERFORMANCE TESTS
3.7 FIELD TRAINING

-- End of Section Table of Contents --

SECTION 15895

AIR SUPPLY, DISTRIBUTION, VENTILATION, AND EXHAUST SYSTEM
02/94

PART 1 GENERAL

1.1 REFERENCES

The publications listed below form a part of this specification to the extent referenced. The publications are referred to in the text by basic designation only.

ALUMINUM ASSOCIATION (AA)

AA DAF-45	(1980) Designation System for Aluminum Finishes

AIR CONDITIONING AND REFRIGERATION INSTITUTE (ARI)

ARI 350	(1986) Sound Rating of Non-Ducted Indoor Air-Conditioning Equipment
ARI 410	(1991) Forced-Circulation Air-Cooling and Air-Heating Coils
ARI 430	(1989) Central-Station Air-Handling Units
ARI 440	(1989) Room Fan-Coil Air-Conditioners
ARI 880	(1990) Air Terminals
ARI Guideline D	(1987) Application and Installation of Central Station Air-Handling Units

AIR DIFFUSION COUNCIL (ADC)

ADC 1062:GRD	(1984) Test Codes for Grilles, Registers and Diffusers

AIR MOVEMENT AND CONTROL ASSOCIATION (AMCA)

AMCA 210	(1985) Laboratory Methods of Testing Fans for Rating
AMCA 300	(1994) Reverberant Room Method for Sound Testing of Fans

AMERICAN BEARING MANUFACTURERS ASSOCIATION (ABEMA)

ABEMA 9	(1990) Load Ratings and Fatigue Life for Ball Bearings
ABEMA 11	(1990) Load Ratings and Fatigue Life for Roller Bearings

AMERICAN SOCIETY FOR TESTING AND MATERIALS (ASTM)

ASTM A 53	(1993a) Pipe, Steel, Black and Hot-Dipped, Zinc-Coated Welded and Seamless
ASTM A 123	(1989a) Zinc (Hot-Dip Galvanized) Coatings on Iron and Steel Products
ASTM A 525	(1993) General Requirement for Steel Sheet, Zinc-Coated (Galvanized) by the Hot-Dip Process
ASTM B 117	(1994) Salt Spray (Fog) Testing
ASTM C 107	(1989) Panel Spalling Testing High-Duty Fireclay Brick
ASTM C 1071	(1991) Thermal and Acoustical Insulation (Glass Fiber, Duct Lining Material)
ASTM D 520	(!984; R 1989) Zinc Dust Pigment
ASTM D 1654	(1992) Evaluation of Painted or Coated Specimens Subjected to Corrosive Environments
ASTM D 3359	(1993) Measuring Adhesion by Tape Test
ASTM E 437	(1992) Industrial Wire Cloth and Screens (Square Opening Series)

AMERICAN SOCIETY OF HEATING, REFRIGERATING AND AIR-CONDITIONING ENGINEERS (ASHRAE)

ASHRAE 52.1	(1992) Gravimetric and Duct-Spot Procedures for Air-Cleaning Devices Used in General Ventilation for Removing Particulate Matter
ASHRAE 68	(1986) Laboratory Method of Testing In-Duct Sound Power Measurement Procedures for Fans

COMMERCIAL ITEM DESCRIPTIONS (CID)

CID A-A-1419	(Rev D) Filter Element, Air Conditioning (Viscous-Impingement and Dry Types, Replaceable)

NATIONAL ELECTRICAL MANUFACTURERS ASSOCIATION (NEMA)

NEMA MG 1	(1993) Motors and Generators

NATIONAL FIRE PROTECTION ASSOCIATION (NFPA)

NFPA 90A	(1993) Installation of Air Conditioning and Ventilating Systems

SHEET METAL AND AIR CONDITIONING CONTRACTORS' NATIONAL ASSOCIATION (SMACNA)

SMACNA-05	(1992) Fire, Smoke and Radiation Damper Installation Guide for HVAC Systems
SMACNA-06	(1985) HVAC Duct Construction Standards - Metal and Flexible

UNDERWRITERS LABORATORIES (UL)

UL-01	(1994; Supple) Building Materials Directory
UL-03	(1994) Electrical Construction Materials Directory
UL-05	(1994; Supple) Fire Resistance Directory
UL 94	(1991; Rev thru May 1994) Tests for Flammability of Plastic Materials for Parts in Devices and Appliances
UL 181	(1994) Factory-Made Air Ducts and Air Connectors
UL 214	(1993) Tests for Flame-Propagation of Fabrics and Films
UL 555	(1990; Rev thru Nov 1993) Fire Dampers
UL 586	(1990) High-Efficiency, Particulate, Air Filter Units
UL 900	(1994) Test Performance of Air Filter Units
UL 1995	(1990) Heating and Cooling Equipment

1.2 COORDINATION OF TRADES

Ductwork, piping offsets, fittings, and accessories shall be furnished as required to provide a complete installation and to eliminate interference with other construction.

1.3 DELIVERY AND STORAGE

Equipment delivered and placed in storage shall be stored with protection from the weather, humidity and temperature variations, dirt and dust, or other contaminants.

1.4 SUBMITTALS

Government approval is required for submittals with a "GA" designation; submittals having an "FIO" designation are for information only. The following shall be submitted in accordance with Section 01300 SUBMITTAL PROCEDURES:

SD-01 Data

Components and Equipment Data; GA.

Manufacturer's catalog data shall be included with the detail drawings for

the following items. The data shall be highlighted to show model, size, options, etc., that are intended for consideration. Data shall be adequate to demonstrate compliance with contract requirements for the following:

a. Piping Components

b. Ductwork Components

c. Air Systems Equipment

d. Air Handling Units

e. Energy Recovery Devices

f. Terminal Units

SD-04 Drawings

Air Supply, Distribution, Ventilation, and Exhaust Equipment; GA.

Drawings shall consist of equipment layout including assembly and installation details and electrical connection diagrams; ductwork layout showing the location of all supports and hangers, typical hanger details, gauge reinforcement, reinforcement spacing rigidity classification, and static pressure and seal classifications; and piping layout showing the location of all guides and anchors, the load imposed on each support or anchor, and typical support details. Drawings shall include any information required to demonstrate that the system has been coordinated and will properly function as a unit and shall show equipment relationship to other parts of the work, including clearances required for operation and maintenance.

SD-06 Instructions

Test Procedures; FIO.

Proposed test procedures for piping hydrostatic test, ductwork leak test, and performance tests of systems, at least 2 weeks prior to the start of related testing.

Welding Procedures; FIO.

A copy of qualified welding procedures, at least 2 weeks prior to the start of welding operations.

System Diagrams; GA.

Proposed diagrams, at least 2 weeks prior to start of related testing. System diagrams that show the layout of equipment, piping, and ductwork, and typed condensed operation manuals explaining preventative maintenance procedures, methods of checking the system for normal, safe operation, and procedures for safely starting and stopping the system shall be framed under glass or laminated plastic. After approval, these items shall be posted where directed.

SD-07 Schedules

Test Schedules; FIO.

Proposed test schedules for hydrostatic test of piping, ductwork leak test, and performance tests, at least 2 weeks prior to the start of related testing.

Field Training Schedule; FIO.

Proposed schedule for field training, at least 2 weeks prior to the start of related training.

SD-08 Statements

Similar Services; FIO.

Statement demonstrating successful completion of similar services on at least 5 projects of similar size and scope, at least 2 weeks prior to submittal of other items required by this section.

Welding Qualification; FIO.

A list of names and identification symbols of qualified welders and welding operators, at least 2 weeks prior to the start of welding operations.

SD-09 Reports

Test Reports; FIO.

Test reports for the piping hydrostatic test, ductwork leak test, and performance tests in booklet form, upon completion of testing. Reports shall document phases of tests performed including initial test summary, repairs/adjustments made, and final test results.

SD-13 Certificates

Bolts; FIO.

Written certification from the bolt manufacturer that the bolts furnished comply with the requirements of this specification. The certification shall include illustrations of product markings, and the number of each type of bolt to be furnished.

SD-19 Operation and Maintenance Manuals

Air Supply, Distribution, Ventilation, and Exhaust Manuals; FIO.

Six manuals listing step-by-step procedures required for system startup, operation, shutdown, and routine maintenance, at least 2 weeks prior to field training. The manuals shall include the manufacturer's name, model number, parts list, list of parts and tools that should be kept in stock by the owner for routine maintenance including the name of a local supplier, simplified wiring and controls diagrams, troubleshooting guide, and recommended service organization (including address and telephone number) for each item of equipment. Each service organization submitted shall be capable of providing 4 hour onsite response to a service call on an emergency basis.

PART 2 PRODUCTS

2.1 STANDARD PRODUCTS

Components and equipment shall be standard products of a manufacturer regularly engaged in the manufacturing of products that are of a similar material, design and workmanship. The standard products shall have been in satisfactory commercial or industrial use for 2 years before bid opening. The 2-year experience shall include applications of components and equipment under similar circumstances and of similar size. The 2 years must be satisfactorily completed by a product which has been sold or is offered for sale on the commercial market through advertisements, manufacturers' catalogs, or brochures. Products having less than a 2-year field service record will be acceptable if a certified record of satisfactory field operation, for not less than 6000 hours exclusive of the manufacturer's factory tests, can be shown. The equipment items shall be supported by a service organization.

2.2 ASBESTOS PROHIBITION

Asbestos and asbestos-containing products shall not be used.

2.3 NAMEPLATES

Equipment shall have a nameplate that identifies the manufacturer's name, address, type or style, model or serial number, and catalog number.

2.4 EQUIPMENT GUARDS AND ACCESS

Belts, pulleys, chains, gears, couplings, projecting setscrews, keys, and other rotating parts exposed to personnel contact shall be fully enclosed or guarded according to OSHA requirements. High temperature equipment and piping exposed to contact by personnel or where it creates a potential fire hazard shall be properly guarded or covered with insulation of a type specified. Catwalks, operating platforms, ladders, and guardrails shall be provided where shown and shall be constructed according to Section 05500 MISCELLANEOUS METAL.

2.5 PIPING COMPONENTS

Piping components shall be constructed according to Section 15569 WATER AND STEAM HEATING and Section 15650 CENTRAL REFRIGERATION AIR-CONDITIONING SYSTEM.

2.5.1 Insulation

Shop and field applied insulation shall be as specified in Section 15250 THERMAL INSULATION FOR MECHANICAL SYSTEMS.

2.5.2 Condensate Drain Lines

Condensate drainage shall be provided for each item of equipment that generates condensate as specified for drain, waste, and vent piping systems in Section 15405 PLUMBING.

2.6 ELECTRICAL WORK

Electrical motor-driven equipment specified shall be provided complete with motor, motor starter, and controls. Unless otherwise specified, electric equipment, including wiring and motor efficiencies, shall be according to Section 16415 ELECTRICAL WORK, INTERIOR. Electrical characteristics and enclosure type shall be as shown. Unless otherwise indicated, motors of 1 hp and above shall be high efficiency type. Motor starters shall be

provided complete with thermal overload protection and other appurtenances necessary. Each motor shall be according to NEMA MG 1 and shall be of sufficient size to drive the equipment at the specified capacity without exceeding the nameplate rating of the motor. Manual or automatic control and protective or signal devices required for the operation specified, and any control wiring required for controls and devices, but not shown, shall be provided. Where two-speed or variable-speed motors are indicated, solid-state variable-speed controller may be provided to accomplish the same function. Solid-state variable-speed controllers shall be utilized for motors rated 10 hp or less. Adjustable frequency drives shall be used for larger motors.

2.7 CONTROLS

Controls shall be provided as specified in Section 15950 HEATING, VENTILATING AND AIR CONDITIONING (HVAC) CONTROL SYSTEMS.

2.8 DUCTWORK COMPONENTS

2.8.1 Metal Ductwork

All aspects of metal ductwork construction, including all fittings and components, shall comply with SMACNA-06 unless otherwise specified. Elbows shall be radius type with a centerline radius of 1-1/2 times the width or diameter of the duct where space permits. Otherwise, elbows having a minimum radius equal to the width or diameter of the duct or square elbows with factory fabricated turning vanes may be used. Static pressure Class 1/2, 1, and 2 inch w.g. ductwork shall meet the requirements of Seal Class C. Class 3 through 10 inch shall meet the requirements of Seal Class A. Sealants shall conform to fire hazard classification specified in Section 15250 THERMAL INSULATION FOR MECHANICAL SYSTEMS. Pressure sensitive tape shall not be used as a sealant. Spiral lock seam duct, shall be made with duct sealant and locked with not less than 3 equally spaced drive screws or other approved methods indicated in SMACNA-06. The sealant shall be applied to the exposed male part of the fitting collar so that the sealer will be on the inside of the joint and fully protected by the metal of the duct fitting. One brush coat of the sealant shall be applied over the outside of the joint to at least 2 inch band width covering all screw heads and joint gap. Dents in the male portion of the slip fitting collar will not be acceptable. Outdoor air intake ducts and plenums shall be fabricated with watertight soldered or brazed joints and seams.

2.8.1.1 Transitions

Diverging air flow transitions shall be made with each side pitched out a maximum of 15 degrees, for an included angle of 30 degrees. Transitions for converging air flow shall be made with each side pitched in a maximum of 30 degrees, for an included angle of 60 degrees, or shall be as indicated. Factory-fabricated reducing fittings for systems using round duct sections when formed to the shape of the ASME short flow nozzle, need not comply with the maximum angles specified.

2.8.1.2 Insulated Nonmetallic Flexible Duct Runouts

Flexible duct runouts shall be used only where indicated. Runout length shall be as shown on the drawings, but shall in no case exceed 6 feet. Runouts shall be preinsulated, factory fabricated, and shall comply with NFPA 90A and UL 181. Either field or factory applied vapor barrier shall

be provided. Where coil induction or high velocity units are supplied with vertical air inlets, a streamlined and vaned and mitered elbow transition piece shall be provided for connection to the flexible duct or hose. The last elbow to these units, other than the vertical air inlet type, shall be a die-stamped elbow and not a flexible connector. Insulated flexible connectors may be used as runouts. The insulated material and vapor barrier shall conform to the requirements of Section 15250 THERMAL INSULATION FOR MECHANICAL SYSTEMS. The insulation material surface shall not be exposed to the air stream.

2.8.1.3 General Service Duct Connectors

A flexible duct connector approximately 6 inches in width shall be provided where sheet metal connections are made to fans or where ducts of dissimilar metals are connected. For round ducts, the flexible material shall be secured by stainless steel or zinc-coated, iron clinch-type draw bands. For rectangular ducts, the flexible material locked to metal collars shall be installed using normal duct construction methods. The composite connector system shall comply with UL 214 and be classified as "flame-retarded fabrics" in UL-01.

2.8.2 Ductwork Accessories

2.8.2.1 Duct Access Doors

Access doors shall be provided in ductwork and plenums where indicated and at all air flow measuring primaries, automatic dampers, fire dampers, coils, thermostats, and other apparatus requiring service and inspection in the duct system, and unless otherwise shown, shall conform to SMACNA-06. Access doors shall be provided upstream and downstream of air flow measuring primaries and heating and cooling coils. Doors shall be minimum 15 by 18 inches, unless otherwise shown. Where duct size will not accommodate this size door, the doors shall be made as large as practicable. Doors 24 by 24 inches or larger shall be provided with fasteners operable from both sides. Doors in insulated ducts shall be the insulated type.

2.8.2.2 Fire Dampers

Fire dampers shall be 1-1/2 hour fire rated unless otherwise indicated. Fire dampers shall conform to the requirements of NFPA 90A and UL 555. Fire dampers shall be automatic operating type and shall have a dynamic rating suitable for the maximum air velocity and pressure differential to which it will be subjected. Fire dampers shall be approved for the specific application, and shall be installed according to their listing. Fire dampers shall be equipped with a steel sleeve or adequately sized frame installed in such a manner that disruption of the attached ductwork, if any, will not impair the operation of the damper. Sleeves or frames shall be equipped with perimeter mounting angles attached on both sides of the wall or floor opening. Ductwork in fire-rated floor-ceiling or roof-ceiling assembly systems with air ducts that pierce the ceiling of the assemblies shall be constructed in conformance with UL-05. Fire dampers shall be curtain type with damper blades out of the air stream. Dampers shall not reduce the duct or the air transfer opening cross-sectional area. Dampers shall be installed so that the centerline of the damper depth or thickness is located in the centerline of the wall, partition or floor slab depth or thickness. Unless otherwise indicated, the installation details given in SMACNA-05 and in manufacturer's instructions for fire dampers shall be followed.

2.8.2.3 Splitters and Manual Balancing Dampers

Splitters and manual balancing dampers shall be furnished with accessible operating mechanisms. Where operators occur in finished portions of the building, operators shall be chromium plated with all exposed edges rounded. Splitters shall be operated by quadrant operators or 3/16 inch rod brought through the side of the duct with locking setscrew and bushing. Two rods are required on splitters over 8 inches. Manual volume control dampers shall be operated by locking-type quadrant operators. Dampers and splitters shall be 2 gauges heavier than the duct in which installed. Unless otherwise indicated, multileaf dampers shall be opposed blade type with maximum blade width of 12 inches. Access doors or panels shall be provided for all concealed damper operators and locking setscrews. Unless otherwise indicated, the locking-type quadrant operators for dampers, when installed on ducts to be thermally insulated, shall be provided with stand-off mounting brackets, bases, or adapters to provide clearance between the duct surface and the operator not less than the thickness of the insulation. Stand-off mounting items shall be integral with the operator or standard accessory of the damper manufacturer. Volume dampers shall be provided where indicated.

2.8.3 Duct Sleeves, Framed Prepared Openings, Closure Collars

2.8.3.1 Duct Sleeves

Duct sleeves shall be provided for round ducts 15 inches in diameter or less passing through floors, walls, ceilings, or roof, and installed during construction of the floor, wall, ceiling, or roof. Round ducts larger than 15 inches in diameter and square, rectangular, and oval ducts passing through floors, walls, ceilings, or roof shall be installed through framed prepared openings. The Contractor shall be responsible for the proper size and location of sleeves and prepared openings. Sleeves and framed openings are also required where grilles, registers, and diffusers are installed at the openings. Framed prepared openings shall be fabricated from 20 gauge galvanized steel, unless otherwise indicated. Where sleeves are installed in bearing walls or partitions, black steel pipe, ASTM A 53, Schedule 20 shall be used. Sleeve shall provide 1 inch clearance between the duct and the sleeve or 1 inch clearance between the insulation and the sleeve for insulated ducts.

2.8.3.2 Framed Prepared Openings

Openings shall have 1 inch clearance between the duct and the opening or 1 inch clearance between the insulation and the opening for insulated ducts.

2.8.3.3 Closure Collars

Collars shall be fabricated of galvanized sheet metal not less than 4 inches wide, unless otherwise indicated, and shall be installed on exposed ducts on each side of walls or floors where sleeves or prepared openings are provided. Collars shall be installed tight against surfaces. Collars shall fit snugly around the duct or insulation. Sharp edges of the collar around insulated duct shall be ground smooth to preclude tearing or puncturing the insulation covering or vapor barrier. Collars for round ducts 15 inches in diameter or less shall be fabricated from 20 gauge galvanized steel. Collars for round ducts larger than 15 inches and square, and rectangular ducts shall be fabricated from 18 gauge galvanized steel. Collars shall be installed with fasteners on maximum 6 inch

centers, except that not less than 4 fasteners shall be used.

2.8.4 Sound Attenuation Equipment

a. System With Total Pressure of 4 Inch Water Gauge and Lower:

Sound attenuators shall be provided only where indicated. Factory fabricated sound attenuators shall be constructed of galvanized steel sheets. Outer casing shall be not less than 22 gauge. Acoustical fill shall be fibrous glass. Net sound reduction shall be as indicated. Values shall be obtained on a test unit not less than 24 inches by 24 inches outside dimensions made by a certified nationally recognized independent acoustical laboratory. Air flow capacity shall be as indicated or required. Pressure drop through the attenuator shall not exceed the value indicated, or shall not be in excess of 15 percent of the total external static pressure of the air handling system, whichever is less. Sound attenuators shall be acoustically tested with metal duct inlet and outlet sections while under the rated air flow conditions. Noise reduction data shall include the effects of flanking paths and vibration transmission. Sound attenuators shall be constructed to be airtight when operating at the internal static pressure indicated or specified for the duct system, but in no case less than 2 inch water gauge.

2.8.5 Diffusers, Registers, and Grilles

Units shall be factory-fabricated of steel, or aluminum and shall distribute the specified quantity of air evenly over space intended without causing noticeable drafts, air movement faster than 50 fpm in occupied zone, or dead spots anywhere in the conditioned area. Outlets for diffusion, spread, throw, and noise level shall be as required for specified performance. Performance shall be certified according to ADC 1062:GRD. Inlets and outlets shall be sound rated and certified according to ADC 1062:GRD. Sound power level shall be as indicated. Diffusers and registers shall be provided with volume damper with accessible operator, unless otherwise indicated; or if standard with the manufacturer, an automatically controlled device will be acceptable. Volume dampers shall be opposed blade type for all diffusers and registers, except linear slot diffusers. Linear slot diffusers shall be provided with round or elliptical balancing dampers. Where the inlet and outlet openings are located less than 7 feet above the floor, they shall be protected by a grille or screen according to NFPA 90A.

2.8.5.1 Diffusers

Diffuser types shall be as indicated. Ceiling mounted units shall be furnished with anti-smudge devices, unless the diffuser unit minimizes ceiling smudging through design features. Diffusers shall be provided with air deflectors of the type indicated. Air handling troffers shall conform to the requirements of UL-03 for the return air units. Ceiling mounted units shall be installed with rims tight against ceiling. Sponge rubber gaskets shall be provided between ceiling and surface mounted diffusers for air leakage control. Suitable trim shall be provided for flush mounted diffusers. Duct collar connecting the duct to diffuser shall be airtight and shall not interfere with volume controller. Return or exhaust units shall be similar to supply diffusers.

2.8.5.2 Registers and Grilles

Units shall be four-way directional-control type, except that return and

exhaust registers may be fixed horizontal or vertical louver type similar in appearance to the supply register face. Registers shall be provided with sponge-rubber gasket between flanges and wall or ceiling. Wall supply registers shall be installed at least 6 inches below the ceiling unless otherwise indicated. Return and exhaust registers shall be located 6 inches above the floor unless otherwise indicated. Grilles shall be as specified for registers, without volume control damper.

2.8.6 Louvers

Furnish and install, where shown, drainable stationary extruded aluminum louver. Frame shall be 6 inch deep, channel or flanged and .081 inch thick extruded aluminum alloy. Blades shall be made of .081 inch thick extruded aluminum alloy. Blades shall be made of .081 thick extruded aluminum alloy, be a fixed 45 inch angle, and be of the drainable type. Screen shall be provided on the interior, be removable for cleaning, and consist of 1/2 thick expanded aluminum with extruded aluminum frame. Maximum panel size shall be 96 inches in width x 96 inches in height and a minimum panel size shall be 12 inches in width x 12 inches in height. Finish shall be color anodized. Color anodized finish shall be AA-M10C22A42 or AA-M10C22A44 in accordance with the requirements of AA DAF-45. Color shall be dark bronze.

Louver shall pass a maximum free area velocity of 1054 fpm with less than .19 in. wg pressure drop and carry less than .01 ounces of water per square foot of free area during a 15 minute period based on tests and procedures performed in accordance with AMCA Publication 511 and comply with the requirements of the AMCA Certified Ratings Program, effective November, 1990. Test criteria shall be based on a 48 inch square sample with a minimum free area of 7.24 square feet or 45.2%. Louver shall carry the AMCA Certified Ratings Seal for both water penetration and air performance. Finish shall be a factory KYNAR bronze finish. Submit colors to the Contrasting Officer for approval.

2.8.7 Bird Screens and Frames

Bird screens shall conform to ASTM E 437, Type I, Class 1, 2 by 2 mesh, 0.063 inch diameter aluminum wire or 0.031 inch diameter stainless steel wire. Frames shall be removable type or extruded aluminum.

2.9 AIR SYSTEMS EQUIPMENT

2.9.1 Fans

Fans shall be tested and rated according to AMCA 210. Fans may be connected to the motors either directly or indirectly with V-belt drive. V-belt drives shall be designed for not less than 140 percent of the connected driving capacity. Motor sheaves shall be variable pitch for 15 hp and below and fixed pitch as defined by ARI Guideline D. Variable pitch sheaves shall be selected to drive the fan at a speed which will produce the specified capacity when set at the approximate midpoint of the sheave adjustment. When fixed pitch sheaves are furnished, a replaceable sheave shall be provided when needed to achieve system air balance. Motors for V-belt drives shall be provided with adjustable rails or bases. Removable metal guards shall be provided for all exposed V-belt drives, and speed-test openings shall be provided at the center of all rotating shafts. Fans shall be provided with personnel screens or guards on both suction and supply ends, except that the screens need not be provided, unless otherwise indicated, where ducts are connected to the fan. Fan and motor

assemblies shall be provided with vibration-isolation supports or mountings as indicated. Vibration-isolation units shall be standard products with published loading ratings. Each fan shall be selected to produce the capacity required at the fan static pressure indicated. Sound power level shall be as indicated. The sound power level values shall be obtained according to AMCA 300. Standard AMCA arrangement, rotation, and discharge shall be as indicated.

2.9.1.1 Centrifugal Fans

Centrifugal fans shall be fully enclosed, single-width single-inlet, or double-width double-inlet, AMCA Pressure Class I, II, or III as required or indicated for the design system pressure. Impeller wheels shall be rigidly constructed, accurately balanced both statically and dynamically. Fan blades may be forward curved, backward-inclined or airfoil design in wheel sizes up to 30 inches. Fan blades for wheels over 30 inches in diameter shall be backward-inclined or airfoil design. Fan wheels over 36 inches in diameter shall have overhung pulleys and a bearing on each side of the wheel. Fan wheels 36 inches or less in diameter may have one or more extra long bearings between the fan wheel and the drive. Bearings shall be sleeve type, self-aligning and self-oiling with oil reservoirs, or precision self-aligning roller or ball-type with accessible grease fittings or permanently lubricated type. Grease fittings shall be connected to tubing and serviceable from a single accessible point. Bearing life shall be L50 rated at not less than 200,000 hours as defined by ABEMA 9 and ABEMA 11. Fan shafts shall be steel, accurately finished, and shall be provided with key seats and keys for impeller hubs and fan pulleys. Each fan outlet shall be of ample proportions and shall be designed for the attachment of angles and bolts for attaching flexible connections. Motors, unless otherwise indicted, shall not exceed 1800 rpm and shall have open dripproof enclosures. Motor starters shall be magnetic across-the-line type with general-purpose enclosure.

2.9.1.2 In-Line Centrifugal Fans

In-line fans shall have centrifugal backward inclined blades, stationary discharge conversion vanes, internal and external belt guards, and adjustable motor mounts. Fans shall be mounted in a welded tubular casing. Air shall enter and leave the fan axially. Inlets shall be streamlined with conversion vanes to eliminate turbulence and provide smooth discharge air flow. Fan bearings and drive shafts shall be enclosed and isolated from the air stream. Fan bearings shall be sealed against dust and dirt and shall be permanently lubricated, and shall be precision self aligning ball or roller type. Bearing life shall be L50 rated at not less than 200,000 hours as defined by ABEMA 9 and ABEMA 11. Motors shall have open enclosure. Motor starters shall be magnetic across-the-line with general-purpose enclosures. Remote manual switch with pilot indicating light shall be provided where indicated.

2.9.1.3 Panel Type Power Wall Ventilators

Fans shall be propeller type, assembled on a reinforced metal panel with venturi opening spun into panel. Fans with wheels less than 24 inches diameter shall be direct or V-belt driven and fans with wheels 24 inches diameter and larger shall be V-belt drive type. Fans shall be furnished with wall mounting collar. Lubricated bearings shall be provided. Fans shall be fitted with wheel and motor side metal or wire guards which have a corrosion-resistant finish. Motor enclosure shall be totally enclosed fan cooled type. Motor operated backdraft dampers shall be provided where

indicated.

2.9.1.4 Centrifugal Type Power Roof Ventilators

Fans shall be direct or V-belt driven with backward inclined, non-overloading wheel. Motor compartment housing shall be hinged or removable and weatherproof, constructed of heavy gauge aluminum. Fans shall be provided with birdscreen, disconnect switch, motorized dampers, roof curb, and extended base. Motors enclosure shall be dripproof type.

2.9.2 Coils

Coils shall be fin-and-tube type constructed of seamless copper tubes and aluminum fins mechanically bonded or soldered to the tubes. Copper tube wall thickness shall be a minimum of 0.016 inches. Aluminum fins shall be 0.0055 inch minimum thickness. Casing and tube support sheets shall be not lighter than 16 gauge galvanized steel, formed to provide structural strength. When required, multiple tube supports shall be provided to prevent tube sag. Each coil shall be tested at the factory under water at not less than 400 psi air pressure and shall be suitable for 200 psi working pressure. Coils shall be mounted for counterflow service. Coils shall be rated and certified according to ARI 410.

2.9.2.1 Water Coils

Water coils shall be installed with a pitch of not less than 1/8 inch per foot of the tube length toward the drain end. Headers shall be constructed of cast iron, welded steel or copper. Each coil shall be provided with a plugged vent and drain connection extending through the unit casing.

2.9.3 Air Filters

Air filters shall be listed according to requirements of UL 900, except high efficiency particulate air filters of 99.97 percent efficiency by the DOP Test method shall be as listed under the Label Service and shall meet the requirements of UL 586.

2.9.3.1 Extended Surface Pleated Panel Filters

Filters shall be 2 inch depth, sectional, disposable type of the size indicated and shall have an average efficiency of 25 to 30 percent when tested according to ASHRAE 52.1. Initial resistance at 500 feet per minute shall not exceed 0.36 inches water gauge. Filters shall be UL Class 2. Media shall be nonwoven cotton and synthetic fiber mat. A wire support grid bonded to the media shall be attached to a moisture resistant fiberboard frame. All four edges of the filter media shall be bonded to the inside of the frame to prevent air bypass and increase rigidity.

2.9.3.2 Holding Frames

Frames shall be fabricated from not lighter than 16 gauge sheet steel with rust-inhibitor coating. Each holding frame shall be equipped with suitable filter holding devices. Holding frame seats shall be gasketed. All joints shall be airtight.

2.9.3.3 Filter Gauges

Filter gauges shall be dial type, diaphragm actuated draft and shall be

provided for all filter stations, including those filters which are furnished as integral parts of factory fabricated air handling units. Gauges shall be at least 3-7/8 inches in diameter, shall have white dials with black figures, and shall be graduated in 0.01 inch, and shall have a minimum range of 1 inch beyond the specified final resistance for the filter bank on which each gauge is applied. Each gauge shall incorporate a screw operated zero adjustment and shall be furnished complete with two static pressure tips with integral compression fittings, two molded plastic vent valves, two 5 foot minimum lengths of 1/4 inch diameter aluminum tubing, and all hardware and accessories for gauge mounting.

2.10 AIR HANDLING UNITS

2.10.1 Field-Fabricated Air Handling Units

Built-up units shall be as specified in paragraph DUCTWORK COMPONENTS. Fans, coils, and air filters shall be as specified in paragraph AIR SYSTEMS EQUIPMENT for types indicated.

2.10.2 Factory-Fabricated Air Handling Units

Units shall be single-zone draw-through type, as indicated. Units shall include fans, coils, airtight insulated casing, prefilters, adjustable V-belt drives, belt guards for externally mounted motors, access sections where indicated, mixing box combination sectional filter-mixing box, vibration-isolators, and appurtenances required for specified operation. Vibration isolators shall be as indicated. Each air handling unit shall have physical dimensions suitable to fit space allotted to the unit and shall have the capacity indicated. Air handling unit shall have published ratings based on tests performed according to ARI 430.

2.10.2.1 Casings

Casing sections shall be single constructed of a minimum 18 gauge galvanized steel, or 18 gauge steel outer casing protected with a corrosion resistant paint finish according to paragraph FACTORY PAINTING. Casing shall be designed and constructed with an integral structural steel frame such that exterior panels are non-load bearing. Exterior panels shall be individually removable. Removal shall not affect the structural integrity of the unit. Casings shall be provided with inspection doors, access sections, and access doors as indicated. Inspection and access doors shall be insulated, fully gasketed, double-wall type, of a minimum 18 gauge outer and 20 gauge inner panels. Doors shall be rigid and provided with heavy duty hinges and latches. Inspection doors shall be a minimum 12 inches wide by 12 inches high. Access doors shall be minimum 24 inches wide and shall be the full height of the unit casing or a minimum of 6 ft., whichever is less. Access Sections shall be according to paragraph AIR HANDLING UNITS. Drain pan shall be double-bottom type constructed of 16 gauge stainless steel, pitched to the drain connection. Drain pans shall be constructed water tight, treated to prevent corrosion, and designed for positive condensate drainage. When 2 or more cooling coils are used, with one stacked above the other, condensate from the upper coils shall not flow across the face of lower coils. Intermediate drain pans or condensate collection channels and downspouts shall be provided, as required to carry condensate to the unit drain pan out of the air stream and without moisture carryover. Each casing section handling conditioned air shall be insulated with not less than 1 inch thick, 1-1/2 pound density coated fibrous glass material having a thermal conductivity not greater than 0.23 Btu/hr-sf-F. Factory applied fibrous glass insulation shall conform to ASTM C 1071,

except that the minimum thickness and density requirements do not apply, and shall meet the requirements of NFPA 90A. Foam-type insulation is not acceptable. Foil-faced insulation shall not be an acceptable substitute for use on double-wall access doors and inspections doors. Duct liner material, coating, and adhesive shall conform to fire-hazard requirements specified in Section 15250 THERMAL INSULATION FOR MECHANICAL SYSTEMS. Exposed insulation edges and joints where insulation panels are butted together shall be protected with a metal nosing strip or shall be coated to conform to meet erosion resistance requirements of ASTM C 107. A latched and hinged inspection door, shall be provided in the fan and coil sections. Additional inspection doors, access doors and access sections shall be provided where indicated.

2.10.2.2 Heating and Cooling Coils

Coils shall be provided as specified in paragraph AIR SYSTEMS EQUIPMENT, for types indicated.

2.10.2.3 Air Filters

Air filters shall be as specified in paragraph AIR SYSTEMS EQUIPMENT for types and thickness indicated.

2.10.2.4 Fans

Fans shall be double-inlet, centrifugal type with each fan in a separate scroll. Fans and shafts shall be dynamically balanced prior to installation into air handling unit, then the entire fan assembly shall be statically and dynamically balanced at the factory after it has been installed in the air handling unit. Fans shall be mounted on steel shafts accurately ground and finished. Fan bearings shall be sealed against dust and dirt and shall be precision self-aligning ball or roller type. Bearing life shall be L50 rated at not less than 200,000 hours as defined by ABEMA 9 and ABEMA 11. Bearings shall be permanently lubricated or lubricated type with lubrication fittings readily accessible at the drive side of the unit. Bearings shall be supported by structural shapes, or die formed sheet structural members, or support plates securely attached to the unit casing. Bearings may not be fastened directly to the unit sheet metal casing. Fans and scrolls shall be furnished with coating indicated. Fans shall be driven by a unit-mounted or a floor-mounted motor connected to fans by V-belt drive complete with belt guard for externally mounted motors. Belt guards shall be the three sided enclosed type with solid or expanded metal face. Belt drives shall be designed for not less than a 1.3 service factor based on motor nameplate rating. Motor sheaves shall be variable pitch for 25 hp and below and fixed pitch above 25 hp as defined by ARI Guideline D. Where fixed sheaves are required, variable pitch sheaves may be used during air balance, but shall be replaced with an appropriate fixed sheave after air balance is completed. Variable pitch sheaves shall be selected to drive the fan at a speed that will produce the specified capacity when set at the approximate midpoint of the sheave adjustment. Motors for V-belt drives shall be provided with adjustable bases. Fan motors shall have open enclosures. Fan motors shall be started by means of variable speed controllers. Unit fan or fans shall be selected to produce the required capacity at the fan static pressure. Sound power level shall be as indicated. The sound power level values shall be obtained according to AMCA 300 or ASHRAE 68.

2.10.2.5 Access Sections and Filter/Mixing Boxes

Access sections shall be provided where indicated and shall be furnished with access doors as shown. Access sections and filter/mixing boxes shall be constructed in a manner identical to the remainder of the unit casing and shall be equipped with access doors. Mixing boxes shall be designed to minimize air stratification and to promote thorough mixing of the air streams.

2.10.2.6 Dampers

Dampers shall be as specified in paragraph CONTROLS.

2.11 TERMINAL UNITS

2.11.1 Room Fan-Coil Units

Base units shall include galvanized coil casing, coil assembly drain pan valve and piping package, air filter, fans, motor, fan drive, and motor switch, plus an enclosure for cabinet models and casing for concealed models. Leveling devices integral with the unit shall be provided for vertical type units. Sound power levels shall be as indicated. Sound power level data or values for these units shall be obtained according to test procedures based on ARI 350. Sound power values apply to units provided with factory fabricated cabinet enclosures and standard grilles. Values obtained for the standard cabinet models will be acceptable for concealed models without separate test provided there is no variation between models as to the coil configuration, blowers, motor speeds, or relative arrangement of parts. Automatic valves and controls shall be provided as specified in paragraph CONTROLS. Each unit shall be fastened securely to the building structure. Capacity of the units shall be as indicated. Room fan-coil units shall be certified as complying with ARI 440, and shall meet the requirements of UL 1995.

2.11.1.1 Enclosures

Enclosures shall be fabricated of not lighter than 18 gauge steel, reinforced and braced. Front panels of enclosures shall be removable and provided with 1/2 inch thick dual density fibrous glass insulation. The exposed side shall be high density, erosion-proof material suitable for use in air streams with velocities up to 4,500 fpm. Discharge grille shall be adjustable integrally stamped and shall be of such design as to properly distribute air throughout the conditioned space. Plastic discharge and return grilles are acceptable provided the plastic material is certified by the manufacturer to be classified as flame resistant according to UL 94 and the material shall comply with the heat deflection criteria specified in UL 1995. Ferrous metal surfaces shall be galvanized or factory finished with corrosion resistant enamel. Access doors or removable panels shall be provided for piping and control compartments. Duct discharge collar shall be provided for concealed models. Enclosures shall have easy access for filter replacement.

2.11.1.2 Fans

Fans shall be galvanized steel or aluminum, multiblade, centrifugal type. In lieu of metal, fans and scrolls may be non-metallic materials of suitably reinforced compounds. Fans shall be dynamically and statically balanced. Surfaces shall be smooth. Assemblies shall be accessible for maintenance. Disassembly and re-assembly shall be by means of mechanical fastening devices and not by epoxies or cements.

2.11.1.3 Coils

Coils shall be constructed of not less than 3/8 inch outside diameter seamless copper tubing, with copper or aluminum fins mechanically bonded or soldered to the tubes. Coils shall be provided with not less than 1/2 inch outside diameter flare or sweat connectors, accessory piping package with thermal connections suitable for connection to the type of control valve supplied, and manual air vent. Coils shall be tested hydrostatically at 300 psi or under water at 250 psi air pressure and suitable for 200 psi working pressure. Provisions shall be made for coil removal.

2.11.1.4 Drain Pans

Drain and drip pans shall be sized and located to collect all water condensed on and dripping from any item within the unit enclosure or casing. Drain pans shall be constructed of not lighter than 21 gauge steel, galvanized after fabrication, thermally insulated to prevent condensation. Insulation shall have a flame spread rating not over 25 without evidence of continued progressive combustion, a smoke developed rating no higher than 50, and shall be of a waterproof type or coated with a waterproofing material. In lieu of the above, drain pans may be constructed of die-formed 22 gauge steel, formed from a single sheet, galvanized after fabrication, insulated and coated as specified for the 21 gauge material or of die-formed 21 gauge type 304 stainless steel, insulated as specified above. Drain pans shall be pitched to drain. Minimum 3/4 inch NPT or 5/8 inch OD drain connection shall be provided in drain pan. Auxiliary drain pans to catch drips from control and piping packages, eliminating insulation of the packages, may be plastic; if metal, the auxiliary pans shall comply with the requirements specified above. Insulation at control and piping connections thereto shall extend 1 inch minimum over the auxiliary drain pan.

2.11.1.5 Filters

Filters shall be of the fiberglass disposable type, 1 inch thick, conforming to CID A-A-1419. Filters in each unit shall be removable without the use of tools.

2.11.1.6 Motors

Motors shall be of the permanent split-capacitor type with built-in thermal overload protection, directly connected to unit fans. Motor switch shall be two or three speeds and off, manually operated, and shall be mounted on an identified plate adjacent to the room thermostat as indicated. In lieu of the above fan speed control, a solid-state variable-speed controller having a minimum speed reduction of 50 percent may be provided. Motors shall have permanently-lubricated or oilable sleeve-type or combination ball and sleeve-type bearings with vibration isolating mountings suitable for continuous duty. Motor power consumption, shown in watts, at the fan operating speed selected to meet the specified capacity shall not exceed the following values:

2.11.2 Variable Air Volume (VAV) and Constant Volume Terminal Units

VAV and constant volume terminal units shall be the type, size, and capacity shown and shall be mounted in the ceiling or wall cavity and shall be suitable for single or dual duct system applications. Actuators and controls shall be as specified in paragraph CONTROLS. Unit enclosures shall be constructed of galvanized steel not lighter than 22 gauge or

aluminum sheet not lighter than 18 gauge. Single outlets shall be provided as required. VAV terminal units with flow limiters are not acceptable. Unit air volume shall be factory preset and readily field adjustable without special tools. Reheat coils shall be provided as indicated. A flow chart shall be attached to each unit. Acoustic performance of the terminal units shall be based upon units tested according to ARI 880. Sound power level shall be as indicated. Discharge sound power shall be shown for minimum and 1-1/2 inches water gauge inlet static pressure. Acoustical lining shall be according to NFPA 90A.

2.11.2.1 Constant Volume, Single Duct

Constant volume, single duct, pressure independent, terminal units shall contain within the casing, a mechanical or pneumatic constant volume regulator. The terminal shall incorporate a multi-point, center-averaging velocity sensor. A minimum of four measuring ports must be parallel to the take-off point from the sensor. Sensors with measuring ports in series are not acceptable. The sensor must provide a minimum differential pressure signal of .03 inch wg. at inlet velocities of 500 fpm. The sensor must provide control signal accuracy of +/- 5% with the same inlet size at any inlet condition. Volume regulators shall control air delivery to within plus or minus 5 percent of specified air flow subjected to inlet pressure from 3/4 inch to 6 inch water gauge.

2.11.2.2 Variable Volume, Single Duct

Variable volume, single duct, pressure independent, terminal units shall be provided with a calibrated air volume sensing device, air valve or damper, actuator, and accessory relays. The terminal shall incorporate a multi-point, center-averaging velocity sensor. A minimum of four measuring ports must be parallel to the take-off point from the sensor. Sensors with measuring ports in series are not acceptable. The sensor must provide a minimum differential pressure signal of .03 inch wg. at inlet velocities of 500 fpm. The sensor must provide control signal accuracy of +/- 5% with the same inlet size at any inlet condition. Units shall control air volume to within plus or minus 5 percent of each air set point volume as determined by the thermostat with variations in inlet pressures from 3/4 inch to 6 inch water gauge. Maximum P.D. of units and coils shall not exceed valves scheduled on Sheet M701 at maximum flow. External differential pressure taps separate from the control pressure taps shall be provided for air flow measurement with a 0 to 1 inch water gauge range. Unit volume controller shall be normally open upon loss of pneumatic pressure.

2.11.2.3 Reheat Units

a. Hot Water Coils: Hot-water coils shall be fin-and-tube type constructed of seamless copper tubes and copper or aluminum fins mechanically bonded or soldered to the tubes. Headers shall be constructed of cast iron, welded steel or copper. Casing and tube support sheets shall be 16 gauge, galvanized steel, formed to provide structural strength. Tubes shall be correctly circuited for proper water velocity without excessive pressure drop and they shall be drainable where required or indicated. At the factory, each coil shall be tested at not less than 250 psi air pressure and shall be suitable for 200 psi working pressure. Drainable coils shall be installed in the air handling units with a pitch of not less than 1/8 inch per foot of tube length toward the drain end. Coils shall conform to the provisions of ARI 410.

2.12 VARIABLE SPEED DRIVES

2.12.1 Variable Speed Drives for Air Handling Units

Variable Speed Drives (VSD) shall produce an adjustable A-C voltage/frequency output for complete motor speed control using transistorized sinecoded PWM Technology, and an input power factor near unity over the entire speed range. The VSD shall not produce excessive or objectional motor acoustical noise, nor shall it induce voltage line notching back to the utility line. The VSD shall be automatically controlled by a grounded electronic 4-20 mA control signal. The VSD shall be self-contained, totally enclosed in a NEMA 1 ventilated cabinet. The VSD shall be 95% efficient at 100% rated output power, 60 Hz. The VSD shall be equipped with an operator control interface with hand/off/auto switch, drive switch with run to stop command, panel mounted digital display indicating unit status, frequency and fault diagnostics. The VSD shall also be equipped with an electronic follower board (4-20 mA). Minimum/Maximum adjustable from 1 to 300 seconds, 50 seconds factory preset. Used shall have a 3-80 Hz controlled speed range, user interface board with terminals for connection of a time clock and safety devices. Protective features shall include current limit provided at 100% of motor FLA, if current exceeds 100% of motor current, the VSD will slow down the motor. If currents continues to rise, the VSD will shutdown on overcurrent. The VSD shall automatically shutdown the motor if current exceeds 180%, Phase-to-Phase output short circuit occurs. The VSD shall also have line-to-line fault protection, electronic overload protection and over temperature protection. The VSD shall be capable of operating up to 330 ft. elevation without derating 0 to 40 temperature range, 90% non-condensing relative humidity, ñ205 A-C line frequency variation. The VSD shall be equipped with thermal overload relay, manual bypass circuit, door interlocked line circuit breaker, line reactor, isolation transformer, and RFI/EMI filter to comply with limits of Part 15, Subpart J of the FCC Rules and Regulations for class A computer devices. The VSD shall be UL listed and all options shall be UL listed, the VSD shall meet the power line transient conditions defined in IEEE-587 and be protected against line transients as great as 6 kV without failure. VSD design and construction shall comply with current applicable provisions of the national electrical code.

2.13 FACTORY PAINTING

Units which are not of galvanized construction according to ASTM A 123 or ASTM A 525 shall be factory painted with a corrosion resisting paint finish. Internal and external ferrous metal surfaces shall be cleaned, phosphatised and coated with a paint finish which has been tested according to ASTM B 117, ASTM D 1654, and ASTM D 3359. Evidence of satisfactory paint performance for a minimum of 125 hours for units to be installed indoors and 500 hours for units to be installed outdoors shall be submitted. Rating of failure at the scribe mark shall be not less than 6, average creepage not greater than 1/8 inch. Rating of the inscribed area shall not be less than 10, no failure. On units constructed of galvanized steel which have been welded, exterior surfaces of welds or welds that have burned through from the interior shall receive a final shop docket of zinc-rich protective paint according to ASTM D 520 Type I.

PART 3 EXECUTION

3.1 INSTALLATION

Work shall be installed as shown and according to the manufacturer's diagrams and recommendations.

3.1.1 Condensate Drain Lines

Water seals shall be provided in the condensate drain from all units except room fan-coil units and VAV terminal units. The depth of each seal shall be 2 inches plus the number of inches, measured in water gauge, of the total static pressure rating of the unit to which the drain is connected. Water seals shall be constructed of 2 tees and an appropriate U-bend with the open end of each tee plugged. Pipe cap or plug cleanouts shall be provided where indicated. Drains indicated to connect to the sanitary waste system shall be connected by an indirect waste fitting. Air conditioner drain lines shall be insulated as specified in Section 15250 THERMAL INSULATION FOR MECHANICAL SYSTEMS.

3.1.2 Air Vents and Drains

3.1.2.1 Vents

Air vents shall be provided at high points, on water coils, and where indicated to ensure adequate venting of the piping system.

3.1.2.2 Drains

Drains shall be provided at low points and where indicated to ensure complete drainage of the piping. Drains shall be accessible, and shall consist of nipples and caps or plugged tees unless otherwise indicated.

3.1.3 Valves

Isolation gate or ball valves shall be installed on each side of each piece of equipment such as pumps, heaters, heating or cooling coils, and other similar items, at the midpoint of all looped mains, and at any other points indicated or required for draining, isolating, or sectionalizing purposes.

Isolation valves may be omitted where balancing cocks are installed to provide both balancing and isolation functions. Each valve except check valves shall be identified. Valves in horizontal lines shall be installed with stems horizontal or above.

3.1.4 Equipment and Installation

Frames and supports shall be provided for tanks, compressors, pumps, valves, air handling units, fans, coils, dampers, and other similar items requiring supports. Air handling units shall be floor mounted or ceiling hung, as indicated. The method of anchoring and fastening shall be as detailed. Floor-mounted equipment, unless otherwise indicated, shall be set on not less than 6 inch concrete pads or curbs doweled in place. Concrete foundations for circulating pumps shall be heavy enough to minimize the intensity of the vibrations transmitted to the piping and the surrounding structure, as recommended in writing by the pump manufacturer.

In lieu of a concrete pad foundation, a concrete pedestal block with isolators placed between the pedestal block and the floor may be provided.

The concrete foundation or concrete pedestal block shall be of a mass not less than three times the weight of the components to be supported. Lines connected to the pump mounted on pedestal blocks shall be provided with flexible connectors. Foundation drawings, bolt-setting information, and foundation bolts shall be furnished prior to concrete foundation

construction for all equipment indicated or required to have concrete foundations. Concrete for foundations shall be as specified in Section 03300 CAST-IN-PLACE STRUCTURAL CONCRETE.

3.1.5 Access Panels

Access panels shall be provided for concealed valves, vents, controls, dampers, and items requiring inspection or maintenance. Access panels shall be of sufficient size and located so that the concealed items may be serviced and maintained or completely removed and replaced. Access panels shall be as specified in Section 05500 MISCELLANEOUS METALS.

3.1.6 Flexible Connectors

Pre-insulated flexible connectors and flexible duct shall be attached to other components in accordance with the latest printed instructions of the manufacturer to ensure a vapor tight joint. Hangers, when required to suspend the connectors, shall be of the type recommended by the connector or duct manufacturer and shall be provided at the intervals recommended.

3.1.7 Sleeved and Framed Openings

Space between the sleeved or framed opening and the duct or the duct insulation shall be packed as specified in Section 07270 FIRESTOPPING for fire rated penetrations. For non-fire rated penetrations, the space shall be packed as specified in Section 07920 JOINT SEALING.

3.1.8 Metal Ductwork

Installation shall be according to SMACNA-06 unless otherwise indicated. Duct supports for sheet metal ductwork shall be according to SMACNA-06, unless otherwise specified. Friction beam clamps indicated in SMACNA-06 shall not be used. Risers on high velocity ducts shall be anchored in the center of the vertical run to allow ends of riser to move due to thermal expansion. Supports on the risers shall allow free vertical movement of the duct. Supports shall be attached only to structural framing members and concrete slabs. Supports shall not be anchored to metal decking unless a means is provided and approved for preventing the anchor from puncturing the metal decking. Where supports are required between structural framing members, suitable intermediate metal framing shall be provided. Where C-clamps are used, retainer clips shall be provided.

3.1.9 Insulation

Thickness and application of insulation materials for ductwork, piping, and equipment shall be according to Section 15250 THERMAL INSULATION FOR MECHANICAL SYSTEMS. Outdoor air intake ducts and plenums shall be externally insulated up to the point where the outdoor air reaches the conditioning unit.

3.1.10 Duct Test Holes

Holes with closures or threaded holes with plugs shall be provided in ducts and plenums as indicated or where necessary for the use of pitot tube in balancing the air system. Extensions, complete with cap or plug, shall be provided where the ducts are insulated.

3.1.11 Power Roof Ventilator Mounting

Foamed 1/2 inch thick, closed-cell, flexible elastomer insulation shall cover width of roof curb mounting flange. Where wood nailers are used, holes shall be pre-drilled for fasteners.

3.1.12 Power Transmission Components Adjustment

V-belts and sheaves shall be tested for proper alignment and tension prior to operation and after 72 hours of operation at final speed. Belts on drive side shall be uniformly loaded, not bouncing. Alignment of direct driven couplings shall be to within 50 percent of manufacturer's maximum allowable range of misalignment.

3.2 FIELD PAINTING AND PIPING IDENTIFICATION

Finish painting of items only primed at the factory or surfaces not specifically noted otherwise and identification for piping are specified in Section 09900 PAINTING, GENERAL.

3.3 PIPING HYDROSTATIC TEST

After cleaning, water piping shall be hydrostatically tested at a pressure equal to 150 percent of the total system operating pressure for period of time sufficient to inspect every joint in the system and in no case less than 2 hours. Leaks shall be repaired and piping retested until test is successful. No loss of pressure will be allowed. Leaks shall be repaired by re-welding or replacing pipe or fittings. Caulking of joints will not be permitted. Concealed and insulated piping shall be tested in place before covering or concealing.

3.4 CLEANING AND ADJUSTING

Pipes shall be cleaned free of scale and thoroughly flushed of foreign matter. A temporary bypass shall be provided for water coils to prevent flushing water from passing through coils. Strainers and valves shall be thoroughly cleaned. Prior to testing and balancing, air shall be removed from water systems by operating the air vents. Temporary measures, such as piping the overflow from vents to a collecting vessel shall be taken to avoid water damage during the venting process. Air vents shall be plugged or capped after the system has been vented. Inside of room fan-coil units air terminal units, ducts, plenums, and casing shall be thoroughly cleaned of debris and blown free of small particles of rubbish and dust and then shall be vacuum cleaned before installing outlet faces. Equipment shall be wiped clean, with traces of oil, dust, dirt, or paint spots removed. Temporary filters shall be provided prior to startup of all fans that are operated during construction, and new filters shall be installed after all construction dirt has been removed from the building, and the ducts, plenums, casings, and other items specified have been vacuum cleaned. System shall be maintained in this clean condition until final acceptance. Bearings shall be properly lubricated with oil or grease as recommended by the manufacturer. Belts shall be tightened to proper tension. Control valves and other miscellaneous equipment requiring adjustment shall be adjusted to setting indicated or directed. Fans shall be adjusted to the speed indicated by the manufacturer to meet specified conditions.

3.5 TESTING, ADJUSTING, AND BALANCING

Testing, adjusting, and balancing shall begin only when the air supply and distribution, including controls, has been completed, with the exception of performance tests.

3.6 PERFORMANCE TESTS

After testing, adjusting, and balancing has been completed as specified, each system shall be tested as a whole to see that all items perform as integral parts of the system and temperatures and conditions are evenly controlled throughout the building. Corrections and adjustments shall be made as necessary to produce the conditions indicated or specified. Capacity tests and general operating tests shall be conducted by an experienced engineer. Tests shall cover a period of not less than 2 days for each system and shall demonstrate that the entire system is functioning according to the specifications. Coincidental chart recordings shall be made at points indicated on the drawings for the duration of the time period and shall record the temperature at space thermostats or space sensors, the humidity at space humidistats or space sensors and the ambient temperature and humidity in a shaded and weather protected area.

3.7 FIELD TRAINING

The Contractor shall conduct a training course for operating and maintenance personnel as designated by the Contracting Officer. Training shall be provided for a period of 16 hours of normal working time and shall start after the system is functionally complete but prior to the performance tests. The field instruction shall cover all of the items contained in the approved Operating and Maintenance Instructions.

-- End of Section --

SECTION TABLE OF CONTENTS

DIVISION 15 - MECHANICAL

SECTION 15950

HEATING, VENTILATING AND AIR CONDITIONING (HVAC) CONTROL SYSTEMS

07/90

PART 1 GENERAL

1.1 REFERENCES
1.2 GENERAL REQUIREMENTS
1.2.1 Standard Products
1.2.2 Identical Items
1.2.3 Nameplates, Lens Caps, and Tags
1.2.4 Verification of Dimensions
1.2.5 Drawings
1.2.6 Power-Line Surge Protection
1.2.7 Surge Protection for Transmitter and Control Wiring
1.3 SUBMITTALS
1.4 DELIVERY AND STORAGE

PART 2 PRODUCTS

2.1 GENERAL EQUIPMENT REQUIREMENTS
2.1.1 Electrical and Electronic Devices
2.1.2 Standard Signals
2.1.3 Ambient Temperature Limits
2.2 MATERIALS
2.2.1 Tubing
2.2.1.1 Copper
2.2.1.2 Plastic
2.2.1.3 Stainless Steel
2.2.2 Wiring
2.2.2.1 Terminal Blocks
2.2.2.2 Control Wiring for 24-Volt Circuits
2.2.2.3 Wiring for 120-Volt Circuits
2.2.2.4 Analog Signal Wiring Circuits
2.2.2.5 Instrumentation Cable
2.2.2.6 Nonconducting Wiring Duct
2.3 ACTUATORS
2.3.1 General Requirements
2.3.2 Damper Actuators
2.3.3 Valve Actuators
2.3.4 Positive Positioners
2.4 AUTOMATIC CONTROL VALVES
2.4.1 Valve Assembly
2.4.2 Butterfly-Valve Assembly
2.4.3 Two-Way Valves
2.4.4 Three-Way Valves
2.4.5 Duct-Coil and Terminal-Unit-Coil Valves
2.4.6 Valves for Chilled-Water, Condenser-Water, and Glycol Service
2.4.7 Valves for Hot-Water Service
2.5 DAMPERS

2.5.1 Damper Assembly
2.5.1.1 Operating Links
2.5.1.2 Damper Types
2.5.2 Outside-Air, Return-Air, and Relief-Air Dampers
2.5.3 Mechanical and Electrical Space Ventilation Dampers
2.6 DUCT SMOKE DETECTORS
2.7 INSTRUMENTATION
2.7.1 Measurements
2.7.2 Temperature Instruments
2.7.2.1 Resistance Temperature Detectors (RTD)
2.7.2.2 Continuous-Averaging RTD
2.7.2.3 RTD Transmitter
2.7.3 Electronic Air-Flow-Measurement Stations and Transmitters
2.7.3.1 Stations
2.7.3.2 Transmitters
2.7.4 Pitot-Tube Air-Flow-Measurement Stations and Transmitters
2.7.4.1 Stations
2.7.4.2 Transmitters
2.7.5 Differential Pressure Instruments
2.7.6 Thermowells
2.7.7 Sunshields
2.8 THERMOSTATS
2.8.1 General
2.8.2 Nonmodulating Room Thermostats
2.8.3 Microprocessor-Based Room Thermostats
2.8.4 Modulating Room Thermostats
2.8.5 Nonmodulating Capillary Thermostats and Aquastats
2.8.6 Low-Temperature-Protection Thermostats
2.8.7 Modulating Capillary Thermostats
2.8.8 Fan-Coil Unit Room Thermostats
2.8.8.1 General
2.8.8.2 Heating Thermostats
2.9 PRESSURE SWITCHES AND SOLENOID VALVES
2.9.1 Pressure Switches
2.9.2 Differential-Pressure Switches
2.9.3 Pneumatic Electric (PE) Switches
2.9.4 Solenoid-Operated Pneumatic (EP) Valves
2.10 INDICATING DEVICES
2.10.1 Thermometers
2.10.1.1 Piping System Thermometers
2.10.1.2 Non-Averaging Air-Duct Thermometers
2.10.1.3 Averaging Air-Duct Thermometers
2.10.1.4 Accuracy
2.10.2 Pressure Gauges
2.10.2.1 Pneumatic Actuator Gauges
2.10.2.2 Air-Storage Tank and Filter and Dryer Gauge
2.10.2.3 Hydronic-System Gauges
2.10.2.4 Control Panel Main Air Gauge
2.10.3 Low Differential Pressure Gauges
2.11 SINGLE-LOOP CONTROLLERS
2.11.1 Controller Features
2.11.2 Parameter Input and Display
2.11.3 Controller Electrical Requirements
2.11.4 Controller Accuracy
2.11.5 Self-Tuning
2.11.6 Manual-Tuning
2.12 CONTROL DEVICES AND ACCESSORIES
2.12.1 Function Modules
2.12.1.1 Minimum-Position Switch and Temperature-Setpoint Device

2.12.1.2 Signal-Inverter Modules
2.12.1.3 High-Low Signal Selector
2.12.1.4 Sequencer Modules
2.12.1.5 Loop Driver Modules
2.12.2 Relays
2.12.3 Time-Delay Relays
2.12.4 Time Clocks
2.12.5 Current-to-Pneumatic (IP) Transducers
2.12.6 Regulated Power Supplies
2.12.7 Power Line Conditioner (PLC)
2.13 PILOT LIGHTS AND MANUAL SWITCHES
2.14 HVAC SYSTEM CONTROL PANELS
2.14.1 Panel Assembly
2.14.2 Panel Electrical Requirements
2.14.3 Enclosure
2.14.4 Mounting and Labeling
2.14.5 Wiring and Tubing
2.14.5.1 Current-to-Pneumatic Transducers (IP)
2.14.5.2 Wiring Interconnections
2.14.5.3 Terminal Blocks
2.14.5.4 Wiring Identification
2.14.6 EMCS Terminal Blocks
2.15 COMPRESSED-AIR STATIONS
2.15.1 Air-Compressor Assembly
2.15.2 Compressed-Air Station Specialties
2.15.2.1 Pressure Regulator, Filter and Refrigerated Dryer
2.15.2.2 Flexible Pipe Connections
2.15.2.3 Vibration-Isolation Units
2.16 ELECTRONIC VARIABLE AIR VOLUME (VAV) TERMINAL UNIT CONTROLS
2.16.1 VAV Terminal Units
2.16.2 Terminal-Unit Controls
2.16.2.1 Box Control Device
2.16.2.2 Communication-and-Programming Device
2.17 MANUAL EMERGENCY FAN SHUTOFF SWITCHES

PART 3 EXECUTION

3.1 GENERAL INSTALLATION CRITERIA
3.1.1 Device-Mounting Criteria
3.1.2 Wiring Criteria
3.1.3 Controller Output Loop Impedance Limitation
3.2 CONTROL-SYSTEM INSTALLATION
3.2.1 Damper Actuators
3.2.2 Local Gauges for Actuators
3.2.3 Room-Instrument Mounting
3.2.4 Low-Temperature-Protection Thermostats
3.2.5 Averaging-Temperature Sensing Elements
3.2.6 Foundations and Housekeeping Pads
3.2.7 Compressed-Air Stations
3.2.8 Duct Static-Pressure Sensing Elements and Transmitters
3.2.9 Indication Devices Installed in Piping and Liquid Systems
3.2.10 Tubing
3.2.10.1 Control System Installation
3.2.10.2 Pneumatic Lines In Mechanical/Electrical Spaces
3.2.10.3 Pneumatic Lines External To Mechanical/Electrical Spaces
3.2.10.4 Connection to Ductwork
3.2.10.5 Tubing in Concrete
3.2.10.6 Final Connection to Actuators
3.2.10.7 Connection to HVAC Control Panel

3.3 CONTROL SEQUENCES OF OPERATION
3.3.1 General Requirements
3.3.1.1 HVAC System Supply Fan Operating
3.3.1.2 HVAC System Supply Fan Not Operating
3.3.2 Perimeter-Radiation Control Sequence
3.3.3 Unit-Heater and Cabinet-Unit-Heater
3.4 COMMISSIONING PROCEDURES
3.4.1 General Procedure
3.4.1.1 Evaluations
3.4.1.2 Item Check
3.4.1.3 Weather-Dependent Test Procedures
3.4.1.4 Configuration
3.4.1.5 Two-Point Accuracy Check
3.4.1.6 Insertion, Immersion Temperature
3.4.1.7 Averaging Temperature
3.4.1.8 Controller Stations
3.4.1.9 Controller-Tuning Procedure
3.4.1.10 Controller Manual-Tuning Procedure
3.4.1.11 Setting the Controller
3.4.2 Space-Temperature-Controlled Perimeter Radiation
3.4.3 Unit Heater and Cabinet Unit Heater
3.4.4 Fan-Coil-Unit
3.4.5 Single Building Hydronic-Heating with Hot Water Boiler
3.4.6 Variable-Air-Volume Control System with Return Fan
3.4.7 Single-Zone with Hydronic Heating and Cooling Coils; No Return Fan
3.5 TESTING, COMMISSIONING, AND BALANCING
3.5.1 Site Testing
3.5.2 Control System Calibration, Adjustments, and Commissioning
3.5.3 Performance Verification Test
3.5.4 Coordination with HVAC System Balancing
3.5.5 Posted Instructions
3.6 TRAINING
3.6.1 Training-Course Requirements
3.6.2 Training-Course Content

-- End of Section Table of Contents --

SECTION 15950

HEATING, VENTILATING AND AIR CONDITIONING (HVAC) CONTROL SYSTEMS
07/90

PART 1 GENERAL

1.1 REFERENCES

The publications listed below form a part of this specification to the extent referenced. The publications are referred to in the text by basic designation only.

AIR MOVEMENT AND CONTROL ASSOCIATION (AMCA)

AMCA 500	(1989) Test Methods for Louvers, Dampers, and Shutters

AMERICAN SOCIETY FOR TESTING AND MATERIALS (ASTM)

ASTM A 269	(1994a) Seamless and Welded Austenitic Stainless Steel Tubing for General Service
ASTM B 88	(1993a) Seamless Copper Water Tube
ASTM D 635	(1991) Rate of Burning and/or Extent and Time of Burning of Self-Supporting Plastics in a Horizontal Position
ASTM D 1693	(1970; R 1988) Environmental Stress-Cracking of Ethylene Plastics

AMERICAN SOCIETY OF HEATING, REFRIGERATING AND AIR-CONDITIONING ENGINEERS (ASHRAE)

ASHRAE-03	(1993; Errata) Handbook, Fundamentals I-P Edition

AMERICAN SOCIETY OF MECHANICAL ENGINEERS (ASME)

ASME B40.1	(1991) Gauges - Pressure Indicating Dial Type - Elastic Element

ASME BPV VIII Div 1 (1992; Addenda Dec 1992, Dec 1993) Boiler and Pressure Vessel Code; Section VIII, Pressure Vessels Division 1 - Basic Coverage

CODE OF FEDERAL REGULATIONS (CFR)

47 CFR 15	Radio Frequency Devices

INSTITUTE OF ELECTRICAL AND ELECTRONICS ENGINEERS (IEEE)

IEEE C62.41	(1991) Surge Voltages in Low-Voltage AC Power Circuits

NATIONAL ELECTRICAL MANUFACTURERS ASSOCIATION (NEMA)

NEMA 250	(1991) Enclosures for Electrical Equipment (1000 Volts Maximum)

NATIONAL FIRE PROTECTION ASSOCIATION (NFPA)

NFPA 90A	(1993) Installation of Air Conditioning and Ventilating Systems

SHEET METAL & AIR CONDITIONING CONTRACTORS' NATIONAL ASSOCIATION (SMACNA)

SMACNA-07	(1993) HVAC Systems - Testing, Adjusting and Balancing

UNDERWRITERS LABORATORIES (UL)

UL 94	(1991; Rev thru May 1994) Tests for Flammability of Plastic Materials for Parts in Devices and Appliances
UL 268A	(1983; Rev Apr 1994) Smoke Detectors for Duct Application
UL 916	(1994; Rev Apr 1994) Energy Management Equipment

1.2 GENERAL REQUIREMENTS

1.2.1 Standard Products

Material and equipment shall be standard products of a manufacturer regularly engaged in the manufacturing of such products which are of a similar material, design and workmanship. The standard products shall have been in satisfactory commercial or industrial use for 2 years prior to bid opening. The 2-year use shall include applications of equipment and materials under similar circumstances and of similar size. The 2 years experience must be satisfactorily completed by a product which has been sold or is offered for sale on the commercial market through advertisements, manufacturers' catalogs, or brochures. Products having less than a 2-year field service record will be acceptable if a certified record of satisfactory field operation, for not less than 6000 hours exclusive of the manufacturer's factory tests, can be shown. The equipment items shall be supported by a service organization. The Contractor shall submit a certified list of qualified permanent service organizations and qualifications. These service organizations shall be reasonably convenient to the equipment on a regular and emergency basis during the warranty period.

1.2.2 Identical Items

Items of the same classification as specified in PART 2 - PRODUCTS shall be identical, including equipment, assemblies, parts, and components.

1.2.3 Nameplates, Lens Caps, and Tags

Nameplates and lens caps bearing legends as shown and tags bearing device-unique identifiers as shown shall have engraved or stamped

characters. Nameplates shall be mechanically attached to HVAC control panel interior doors. A plastic or metal tag shall be mechanically attached directly to each device or attached by a metal chain or wire. Each air flow measurement station shall have a tag showing flow rate range for signal output range, duct size, and identifier as shown.

1.2.4 Verification of Dimensions

The Contractor shall become familiar with all details of the work, shall verify all dimensions in the field, and shall advise the Contracting Officer of any discrepancy before performing any work.

1.2.5 Drawings

Because of the small scale of the drawings, it is not possible to indicate all offsets, fittings, and accessories that may be required. The Contractor shall carefully investigate the mechanical, electrical, and finish conditions that could affect the work to be performed, shall arrange such work accordingly, and shall furnish all work necessary to meet such conditions.

1.2.6 Power-Line Surge Protection

All equipment connected to ac circuits shall be protected from power-line surges. Equipment protection shall meet the requirements of IEEE C62.41. Fuses shall not be used for surge protection.

1.2.7 Surge Protection for Transmitter and Control Wiring

All HVAC system control-panel equipment shall be protected against surges induced on control and transmitter wiring installed outside and as shown. The equipment protection shall be tested in the normal mode and in the common mode, using the following two waveforms:

a. A 10-microsecond by 1000-microsecond waveform with a peak voltage of 1500 volts and a peak current of 60 amperes.

b. An 8-microsecond by 20-microsecond waveform with a peak voltage of 1000 volts and a peak current of 500 amperes.

1.3 SUBMITTALS

Government approval is required for submittals with a "GA" designation; submittals having an "FIO" designation are for information only. The following shall be submitted in accordance with Section 01300 SUBMITTAL PROCEDURES:

SD-01 Data

HVAC Control System; GA.

Manufacturer's equipment data, product specific catalog cuts, and an ASME air-storage tank certificate. Catalog cuts shall be in booklet form indexed by device type. Where multiple components are show on a catalog cut, the application-specific component shall be marked.

Training; FIO.

A training course in the maintenance and operation of the HVAC control

systems specified, 60 days prior to the start of training. The training shall be oriented to the specific systems being installed under this contract. One training manual shall be furnished for each trainee, plus two additional copies delivered for archival storage at the project site. The manuals shall include the agenda, the defined objectives for each lesson, and a detailed description of the subject matter for each lesson. Two copies of audiovisual materials shall be delivered for archival storage at the project site, either as a part of the printed training manuals or on the same media as that to be used during the training session.

Equipment; FIO.

The equipment data shall be in booklet form and indexed to the unique identifiers. Data sheets that document compliance with the specification and a copy of each HVAC control system bill of materials.

SD-04 Drawings

HVAC Control System; GA.

Drawings shall include: a drawing index; a list of symbols; a series of drawings for each HVAC control system using abbreviations, symbols, nomenclature and identifiers as shown on the contract drawings; valve schedules; damper schedules; and a compressed-air station schematic on 34-inch by 22-inch sheets. All detail drawings shall be delivered together as a complete package. Valve and damper schedules may be submitted in advance but shall be included in the complete submittal. Each control-system element on a drawing shall have a unique identifier as shown.

Each series of drawings for an HVAC control system shall include a schematic as shown, a ladder diagram as shown, an equipment schedule as shown, a wiring diagram, a list of equipment with manufacturer and model number, a control-panel arrangement drawing, and an HVAC control-system sequence of operation.

The wiring diagram shall show the interconnection of conductors and cables to HVAC control-panel terminal blocks and to the identified terminals of starters and packaged equipment, with all necessary jumpers and ground connections. The wiring diagram shall show the labels of all conductors. All sources of power required for HVAC control systems and for packaged-equipment control systems shall be identified back to the panelboard circuit breaker number, HVAC system control panel, magnetic starter, or packaged control equipment circuit. Each power supply and transformer not integral to a controller, starter, or packaged equipment shall be shown. The connected volt-ampere load and the power supply volt-ampere rating shall be shown.

The HVAC control-panel arrangement drawing shall show nameplate legends, fabrication details, and enclosure operating temperature-rise calculations. Fabrication details shall include interior door front and rear views, back panel layout and terminal block layout.

The sequence of operation for each HVAC control system shall be in the language and format of this specification. No operational deviations from specified sequences will be permitted without prior written approval of the Contracting Officer. The sequence of operation shall refer to each device by its unique identifier.

The valve schedule shall include each valve's unique identifier, size, flow

coefficient (Cv), pressure drop at specified flow rate, spring range, positive-positioner range, and actuator size, supported by close-off pressure data, dimensions, operation rate, and access and clearance requirements data.

The damper schedule shall contain each damper's and each actuator's identifier, nominal and actual sizes, orientation of axis and frame, direction of blade rotation, spring ranges, operation rate, positive-positioner ranges, locations of actuators and damper end switches, arrangement of sections in multisection dampers, and methods of connecting dampers, actuators, and linkages. The damper schedule shall include the maximum expected velocity through the damper at the intended location and the maximum leakage rate at the operating static-pressure differential. The damper schedule shall contain actuator selection data supported by calculations of the torque required to move and seal the dampers, access and clearance requirements.

The compressed-air station schematic diagram shall show all equipment, including: compressor with motor horsepower and voltage; starter; isolators; manual bypasses; tubing sizes; drain piping and drain traps; reducing valves; dryer; and data on manufacturer's names and model numbers, mounting, access, and clearance requirements. Air-compressor and air-dryer data shall include calculations of the air consumption of all current-to-pneumatic transducers (IP's) and of any other control-system devices to be connected to the compressed-air station, the number of starts per hour and the running time for the unit selected, and the compressed air-supply dewpoint temperature at 20 psi.

SD-06 Instructions

Service Organization; FIO.

Six copies of a list of service organizations qualified to service the HVAC control system. The list shall include the service organization name and telephone number.

SD-09 Reports

Testing, Commissioning, and Balancing; FIO.

Six copies of the site testing procedures. The site testing procedures shall identify each item to be tested and shall clearly describe each test. The test procedures shall include a list of the test equipment to be used for site testing, manufacturer and model number, and the date of calibration and accuracy of calibration within 6 months of the test date. Six copies of the site testing data. Original copies of all data produced during site testing, including results of each test procedure, after approval of the site tests. Six copies of the performance verification test plans and procedures. The test plan and procedures for the performance verification test, indexed and in booklet form, 60 days before scheduled test dates. Six copies of the performance verification test report, after completion of a successful test. Documentation of test results for the entire HVAC control system, complete and in booklet form and indexed, within 30 days after each test.

SD-18 Records

Testing, Commissioning, and Balancing; FIO.

Six copies of the calibration, adjustment and commissioning report which shall include controller setpoints and proportional, integral and derivative-mode constant settings, calibration data for all instruments and controls, and all the data resulting from adjusting the control-system devices and commissioning HVAC control system.

SD-19 Operation and Maintenance Manuals

HVAC Control System; FIO.

Six complete copies of operation manuals for each HVAC control system, in booklet form and indexed, outlining the step-by-step procedures required for each HVAC control system's startup, operation, and shutdown. The manuals shall include all detail drawings, equipment data, each controller's configuration check sheet and manufacturer supplied operation manuals for all equipment. Six complete copies of maintenance manuals, indexed in booklet form listing maintenance procedures. The maintenance instructions shall include a maintenance check list for each HVAC control system. Maintenance manuals shall include spare parts data and recommended maintenance tool kits for all control devices. Maintenance instructions shall include recommended repair methods, either field repair, factory repair, or whole-item replacement. If operation and maintenance manuals are provided in a common volume, they shall be clearly differentiated and separately indexed.

Commissioning Procedures; FIO.

Commissioning Procedures for each HVAC control system, and for each type of terminal-unit control system. The procedures shall reflect the language and format of this specification. The commissioning procedures shall refer to the devices by their unique identifiers as shown. The commissioning procedures shall include step-by-step configuration procedures for each controller. The configuration procedures shall be product specific and shall include a configuration check sheet showing all configuration parameters, dip switch settings, and initial recommended P, I and D constants. Six copies of Commissioning Procedures, 60 days prior to system commissioning, in booklet form and indexed, for each type of control device provided, such as controllers, pilot positioners, adjustable relays, and transmitters. Commissioning procedures shall include general instructions on how to set control parameters, including: setpoints; proportional, integral, and derivative mode constants; contact output settings for the specific devices provided. Commissioning procedures shall be specific to each HVAC system, shall detail the steps involved, and shall refer to the procedures in the booklet for specific devices.

1.4 DELIVERY AND STORAGE

Products shall be stored with protection from the weather, humidity and temperature variations, dirt and dust, and other contaminants, within the storage-condition limits published by the equipment manufacturer. Dampers shall be stored so that seal integrity, blade alignment and frame alignment are maintained.

PART 2 PRODUCTS

2.1 GENERAL EQUIPMENT REQUIREMENTS

2.1.1 Electrical and Electronic Devices

All electrical, electronic, and electro-pneumatic devices not located within an HVAC control panel shall have an enclosure NEMA 1 in accordance with NEMA 250 unless otherwise shown.

2.1.2 Standard Signals

The output of all analog transmitters and the analog input and output of all single-loop controllers and function modules shall be 4-to-20 mAdc signals. The signal shall originate from current-sourcing devices and shall be received by current-sinking devices.

2.1.3 Ambient Temperature Limits

Actuators and positive positioners, and transmitters shall operate within temperature limit ratings of plus 35 to 150 degrees F. All panel-mounted instruments shall operate within limit ratings of 35 to 120 degrees F and 10 percent to 95 percent relative humidity, noncondensing. All devices installed outdoors shall operate within limit ratings of minus 35 to 150 degrees F.

2.2 MATERIALS

2.2.1 Tubing

2.2.1.1 Copper

Copper tubing shall conform to ASTM B 88 and shall have sweat fittings and valves.

2.2.1.2 Plastic

Plastic tubing shall have barbed fittings and valves. Plastic tubing shall have the burning characteristics of linear low-density polyethylene tubing, shall be self-extinguishing when tested in accordance with ASTM D 635, shall have UL 94 V-2 flammability classification, and shall withstand stress cracking when tested in accordance with ASTM D 1693. Plastic-tubing bundles shall be provided with Mylar barrier and flame-retardant polyethylene jacket.

2.2.1.3 Stainless Steel

Stainless steel tubing shall conform to ASTM A 269, and shall have stainless steel compression fittings.

2.2.2 Wiring

2.2.2.1 Terminal Blocks

Terminal blocks shall be insulated, modular, feed-through, clamp style with recessed captive screw-type clamping mechanism, shall be suitable for rail mounting, and shall have end plates and partition plates for separation or shall have enclosed sides.

2.2.2.2 Control Wiring for 24-Volt Circuits

Control wiring for 24-volt circuits shall be 18 AWG minimum stranded copper, and shall be rated for 300-volt service.

2.2.2.3 Wiring for 120-Volt Circuits

Wiring for 120-volt circuits shall be 18 AWG minimum stranded copper, and shall be rated for 600-volt service.

2.2.2.4 Analog Signal Wiring Circuits

Analog signal wiring circuits within control panels shall not be less than 20 AWG and shall be rated for 300-volt service.

2.2.2.5 Instrumentation Cable

Instrumentation cable shall be 18 AWG, stranded copper, single or multiple-twisted, minimum 2-inch lay of twist, 100 percent shielded pairs, and shall have a 300-volt insulation. Each pair shall have a 20-AWG tinned-copper drain wire and individual overall pair insulation. Cables shall have an overall aluminum-polyester or tinned-copper cable-shield tape, overall 20-AWG tinned-copper cable drain wire, and overall cable insulation.

2.2.2.6 Nonconducting Wiring Duct

Nonconducting wiring duct in control panels shall have slotted sides, snap-on duct covers, fittings for connecting ducts, mounting clips for securing ducts, and wire-retaining clips.

2.3 ACTUATORS

2.3.1 General Requirements

Actuators shall fail to their spring-return positions as shown on signal or power failure and shall have a visible position indicator. Actuators shall open or close the devices to which they are applied within 60 seconds after a full scale input signal change. Electric or electronic actuators operating in parallel or in sequence shall have an auxiliary actuator driver. Pneumatic actuators shall be rated for 25 psig operating pressure except for high-pressure cylinder-type actuators. Actuators shall be pneumatic, electric or electronic as shown.

2.3.2 Damper Actuators

Actuators shall smoothly operate the devices to which they are applied. Actuators shall fully open and close the devices to which they are applied and shall have a full stroke response time of 60 seconds or less. The actuator stroke shall be limited by an adjustable stop in the direction of power stroke. The actuators shall be provided with mounting and connecting hardware.

2.3.3 Valve Actuators

Valve actuators shall be selected to provide a minimum of 125 percent of the motive power necessary to operate the valve over its full range of operation.

2.3.4 Positive Positioners

Each positive positioner shall be a pneumatic relay with a mechanical feedback mechanism and an adjustable operating range and starting point.

2.4 AUTOMATIC CONTROL VALVES

2.4.1 Valve Assembly

Valves shall have stainless-steel stems and stuffing boxes with extended necks to clear the piping insulation. Valve bodies shall be designed for not less than 125 psi working pressure or 150 percent of the system operating pressure, whichever is greater. Valve leakage rating shall be .01 percent of rated Cv.

2.4.2 Butterfly-Valve Assembly

Butterfly valves shall be threaded lug type suitable for dead-end service, and for modulation to the fully-closed position, with carbon-steel bodies and noncorrosive discs, stainless steel shafts supported by bearings, and EPDM seats suitable for temperatures from minus minus 20 degrees to plus 250 degrees F. Valves shall have a manual means of operation independent of the actuator.

2.4.3 Two-Way Valves

Two-way modulating valves shall have equal-percentage characteristics.

2.4.4 Three-Way Valves

Three-way valves shall provide linear flow control with constant total flow throughout full plug travel.

2.4.5 Duct-Coil and Terminal-Unit-Coil Valves

Control valves with either flare-type or solder-type ends shall be provided for duct or terminal-unit coils. Flare nuts shall be furnished for each flare-type end valve.

2.4.6 Valves for Chilled-Water, Condenser-Water, and Glycol Service

Bodies for valves 1-1/2 inches and smaller shall be brass or bronze, with threaded or union ends. Bodies for valves from 2 inches to 3 inches inclusive shall be of brass, bronze or iron. Bodies for 2-inch valves shall have threaded ends. Bodies for valves from 2-1/2 inches to 3 inches shall have flanged-end connections. Valve Cv shall be within 100 percent to 125 percent of the Cv shown. Internal valve trim shall be brass or bronze except that valve stems may be type 316 stainless steel. Valves 4 inches and larger shall be butterfly valves.

2.4.7 Valves for Hot-Water Service

Valves for hot water service below 250 degrees F shall be as follows: Bodies for valves 1-1/2 inches and smaller shall be brass or bronze, with threaded or union ends. Bodies for 2-inch valves shall have threaded ends. Bodies for valves from 2 inches to 3 inches inclusive shall be of brass, bronze, or iron. Bodies for valves 4 inches and larger shall be iron. Bodies for valves 2-1/2 inches and larger shall be provided with flanged-end connections. Valve Cv shall be within 100 percent to 125 percent of the Cv shown. Internal trim (including seats, seat rings, modulating plugs, and springs) of valves controlling water hotter than 210 degrees F shall be Type 316 stainless steel. Internal trim for valves controlling water 210 degrees F or less shall be brass or bronze. Nonmetallic parts of hot-water control valves shall be suitable for a minimum continuous operating temperature of 250 degrees F or 50 degrees F

above the system design temperature, whichever is higher. Valves 4 inches and larger shall be butterfly valves.

2.5 DAMPERS

2.5.1 Damper Assembly

A single damper section shall have blades no longer than 48 inches and shall be no higher than 72 inches. Maximum damper blade width shall be 8 inches. Larger sizes shall be made from a combination of sections. Dampers shall be steel, or other materials where shown. Flat blades shall be made rigid by folding the edges. All blade-operating linkages shall be within the frame so that blade-connecting devices within the same damper section will not be located directly in the air stream. Damper axles shall be 0.5-inch (minimum) plated steel rods supported in the damper frame by stainless steel or bronze bearings. Blades mounted vertically shall be supported by thrust bearings. Pressure drop through dampers shall not exceed 0.04 inch water gauge at 1,000 fpm in the wide-open position. Frames shall not be less than 2 inches in width. Dampers shall be tested in accordance with AMCA 500.

2.5.1.1 Operating Links

Operating links external to dampers (such as crankarms, connecting rods, and line shafting for transmitting motion from damper actuators to dampers) shall withstand a load equal to at least twice the maximum required damper-operating force. Rod lengths shall be adjustable. Links shall be brass, bronze, zinc-coated steel, or stainless steel. Working parts of joints and clevises shall be brass, bronze, or stainless steel. Adjustments of crankarms shall control the open and closed positions of dampers.

2.5.1.2 Damper Types

Dampers shall be parallel blade type.

2.5.2 Outside-Air, Return-Air, and Relief-Air Dampers

The dampers shall be provided where shown. Blades shall have interlocking edges and shall be provided with compressible seals at points of contact. The channel frames of the dampers shall be provided with jamb seals to minimize air leakage. Dampers shall not leak in excess of 20 cfm per square foot at 4 inches water gauge static pressure when closed. Seals shall be suitable for an operating temperature range of minus 40 to plus 200 degrees F. Dampers shall be rated at not less than 2000 fpm air velocity.

2.5.3 Mechanical and Electrical Space Ventilation Dampers

The dampers shall be as shown. Dampers shall not leak in excess of 80 cfm per square foot at 4 inches water gauge static pressure when closed. Dampers shall be rated at not less than 1500 fpm air velocity.

2.6 DUCT SMOKE DETECTORS

Duct smoke detectors shall be provided in supply and return air ducts in accordance with NFPA 90A. Duct smoke detectors shall conform to the requirements of UL 268A. Duct smoke detectors shall have perforated sampling tubes extended into the air duct. Detector circuitry shall be

mounted in a metallic enclosure exterior to the duct. Detectors shall have manual reset. Detectors shall be rated for air velocities that include air flows between 500 and 4000 fpm Detectors shall be powered from the HVAC control panel. Detectors shall have two sets of normally open alarm contacts and two sets of normally closed alarm contacts. Detectors shall be connected to the building fire alarm panel for alarm initiation. A remote annunciation lamp and accessible remote reset switch shall be provided for duct detectors that are mounted eight feet or more above the finished floor and for detectors that are not readily visible. Remote lamps and switches as well as each affected fan unit shall be properly identified in etched rigid plastic placards.

2.7 INSTRUMENTATION

2.7.1 Measurements

Transmitters shall be calibrated to provide the following measurements, over the indicated ranges, for an output of 4 to 20 mAdc:

a. Conditioned space temperature, from 50 to 85 degrees F.

b. Duct temperature, from 40 to 140 degrees F except that return-air temperature for economizer operation shall be minus 30 to plus 130 degrees F.

c. Chilled-water temperature, from 30 to 100 degrees F.

d. Heating hot-water temperature, from 100 to 250 degrees F.

e. Outside-air temperature, from minus 30 to 130 degrees F.

f. Differential pressure for VAV supply-duct static pressure from 0 to 2.0 inches water gauge.

g. Pitot-tube air-flow measurement station and transmitter, from 0 to 0.1 inch water gauge for flow velocities of 700 to 1200 fpm, 0 to 0.25 inch for velocities of 700 to 1800 fpm, or 0 to 4 inch for velocities of 700 to 2500 fpm.

h. Electronic air-flow measurement station and transmitter, from 125 to 2500 fpm.

2.7.2 Temperature Instruments

2.7.2.1 Resistance Temperature Detectors (RTD)

Temperature sensors shall be 100 ohms 3- or 4- wire RTD. Each RTD shall be platinum with a tolerance of plus or minus 0.1 percent at 32 degrees F, and shall be encapsulated in epoxy, series 300 stainless steel, anodized aluminum, or copper. Each RTD shall be furnished with an RTD transmitter as specified, integrally-mounted unless otherwise shown.

2.7.2.2 Continuous-Averaging RTD

Continuous-averaging RTDs shall have a tolerance of plus or minus 1.0 degree F at the reference temperature, and shall be of sufficient length to ensure that the resistance represents an average over the cross-section in which it is installed. The sensing element shall have a bendable copper sheath. Each averaging RTD shall be furnished with an RTD transmitter as

specified, to match the resistance range of the averaging RTD.

2.7.2.3 RTD Transmitter

The RTD transmitter shall accept a 3-wire 100 ohm RTD input. The transmitter shall be a 2-wire, loop-powered device. The transmitter shall produce a linear 4-to-20 mAdc output corresponding to the required temperature measurement. The output error shall not exceed 0.1 percent of the calibrated span. The transmitter shall include offset and span adjustments.

2.7.3 Electronic Air-Flow-Measurement Stations and Transmitters

2.7.3.1 Stations

Each station shall consist of an array of velocity sensing elements and an air-flow straightener inside a flanged sheet-metal casing. The velocity sensing elements shall be of the RTD or thermistor type, producing a linear output. The sensing elements shall be distributed across the duct cross-section in the quantity and pattern set forth for measurements and instruments of ASHRAE-03 and SMACNA-07 for the traversing of ducted air flows. The resistance to air flow through the air-flow measurement station shall not exceed 0.08 inch water gauge at an air flow of 2000 fpm. Station construction shall be suitable for operation at air flows of up to 5000 fpm over a temperature range of 40 to 120 degrees F, and accuracy shall be plus or minus 3 percent over a range of 125 to 2500 fpm scaled to air volume.

2.7.3.2 Transmitters

Each transmitter shall produce a linear, temperature compensated 4-to-20 mAdc output corresponding to the required velocity measurement. The output error of the transmitter shall not exceed 0.5 percent of the calibrated measurement. Each transmitter shall have offset and span adjustments.

2.7.4 Pitot-Tube Air-Flow-Measurement Stations and Transmitters

2.7.4.1 Stations

Each station shall contain an array of velocity sensing elements and straightening vanes inside a flanged sheet-metal casing. The velocity sensing elements shall be of the multiple pitot-tube type with averaging manifolds. The sensing elements shall be distributed across the duct cross-section in the quantity and pattern set forth for measurements and instruments of ASHRAE-03 or SMACNA-07 for the traversing of ducted air flows. The resistance to air flow through the air-flow-measurement station shall not exceed 0.08 inch water gauge at an air flow of 2000 fpm. Station construction shall be suitable for operation at air flows of up to 5000 fpm over a temperature range of 40 to 120 degrees F, and accuracy shall be plus or minus 3 percent over a range of 500 to 2500 fpm scaled to air volume. This device will not be used if the required velocity measurement is below 700 feet per minute.

2.7.4.2 Transmitters

Each transmitter shall produce a linear 4-to-20 mAdc output corresponding to the required velocity pressure measurement. Each transmitter shall have a low-range differential-pressure sensing element and a square-root extractor. Sensing element accuracy shall be plus or minus 1 percent of full scale, and overall transmitter accuracy shall be plus or minus 0.25

percent of the calibrated measurement. Each transmitter shall have offset and span adjustments.

2.7.5 Differential Pressure Instruments

The instrument shall be a pressure transmitter with an integral sensing element. The instrument over pressure rating shall be 300 percent of the operating pressure. The sensor/transmitter assembly accuracy shall be plus or minus 2 percent of full scale. The transmitter shall be a 2-wire, loop-powered device. The transmitter shall produce a linear 4-to-20 mAdc output corresponding to the required pressure measurement. Each transmitter shall have offset and span adjustments.

2.7.6 Thermowells

Thermowells shall be Series 300 stainless steel with threaded brass plug and chain, 2-inch lagging neck and extension-type well, and inside diameter and insertion length as required for the application.

2.7.7 Sunshields

Sunshields for outside-air temperature sensing elements shall prevent the sun from directly striking the temperature sensing elements. The sunshields shall be provided with adequate ventilation so that the sensing element responds to the ambient temperature of the surroundings. The top of each sunshield shall have a galvanized-metal rainshield projecting over the face of the sunshield. The sunshields shall be painted white or shall be unpainted aluminum.

2.8 THERMOSTATS

2.8.1 General

Thermostat ranges shall be selected so that the setpoint is adjustable without tools between plus or minus 10 degrees F of the setpoint shown. Thermostats shall be electric or low-voltage electronic.

2.8.2 Nonmodulating Room Thermostats

Contacts shall be single-pole double-throw (SPDT), hermetically sealed, and wired to identified terminals. Maximum differential shall be 5 degrees F. Room thermostats shall be enclosed with separate locking covers (guards). Thermostats shall have manual switches as required by the application.

2.8.3 Microprocessor-Based Room Thermostats

Microprocessor-based thermostats shall have built-in keypads for scheduling of day and night temperature settings. Access to the scheduling mode shall be by a password control code. When out of the scheduling mode, thermostats shall have continuous display of time, with AM and PM indicator, continuous display of day of week, and either continuous display of room temperature with display of temperature setpoint on demand, or continuous display of temperature setpoint with display of room temperature on demand. In the programmable mode, the display shall be used for setting and interrogating time program ON-OFF setpoints for all 7 days of the week. The time program shall allow 2 separate temperature-setback intervals per day. The thermostats shall have a means for temporary and manual override of the program schedule, with automatic program restoration on the following day. Thermostats shall have a replaceable battery to maintain

the timing and maintain the schedule in memory for 1 year in the event of a power outage. Maximum differential shall be 2 degrees F. When used for heat-pump applications, the thermostat shall have an emergency heat switch.

2.8.4 Modulating Room Thermostats

These thermostats shall have either one output signal, two output signals operating in unison, or two output signals operating in sequence, as required for the application. Each thermostat shall have an adjustable throttling range of 4 to 8 degrees F for each output. Room thermostats shall be enclosed with separate locking covers (guards).

2.8.5 Nonmodulating Capillary Thermostats and Aquastats

Each thermostat shall have a capillary length of at least 5 feet, shall have adjustable direct-reading scales for both setpoint and differential, and shall have a differential adjustable from 6 to 16 degrees F. Aquastats shall be of the strap-on type, with 10 degrees F fixed differential.

2.8.6 Low-Temperature-Protection Thermostats

Low-temperature-protection thermostats shall be, low-temperature safety thermostats, with NO and NC contacts and a 20-foot element which shall respond to the coldest 18-inch segment.

2.8.7 Modulating Capillary Thermostats

Each thermostat shall have either one output signal, two output signals operating in unison, or two output signals operating in sequence, as required for the application. Thermostats shall have adjustable throttling ranges of 4 to 8 degrees F for each output.

2.8.8 Fan-Coil Unit Room Thermostats

2.8.8.1 General

Fan-coil unit room thermostats in personnel living spaces shall be of the low-voltage type with locking covers. Electrical rating shall not exceed 2.5 amperes at 30 volts ac. Housing shall be corrosion resistant metal or molded plastic. Transformer and fan relay shall be provided for the proper operation of each thermostatic control system as necessary to suit the design of the control system using the thermostats specified below. Either separate heating thermostats and separate cooling thermostats or dual element heating-cooling thermostats may be provided. Motor speed switches shall be provided for 3-speed fan control.

2.8.8.2 Heating Thermostats

Fan-coil heating thermostats shall be provided with fixed heat anticipation and shall have a single-pole, single-throw (SPST) switch hermetically sealed and actuated by a bimetallic or bellows type element. Thermostats shall be provided with external temperature setting devices with a factory set maximum of 72 68 degrees F. Heating thermostats shall have an adjustable range of at least 13 degrees F below 72 68 degrees F.

2.9 PRESSURE SWITCHES AND SOLENOID VALVES

2.9.1 Pressure Switches

Each switch shall have an adjustable setpoint with visible setpoint scale. Range shall be as shown. Differential adjustment shall span 20 to 40 percent of the range of the device.

2.9.2 Differential-Pressure Switches

Each switch shall be an adjustable diaphragm-operated device with 2 SPDT contacts, with taps for sensing lines to be connected to duct pressure fittings designed to sense air pressure. These fittings shall be of the angled-tip type with tips pointing into the air stream. Range shall be 0.5 to 6.0 inches water gauge. Differential shall be a maximum of 0.15 inch water gauge at the low end of the range and 0.35 inch water gauge at the high end of the range.

2.9.3 Pneumatic Electric (PE) Switches

Each switch shall have an adjustable setpoint range of 3 to 20 psi with a switching differential adjustable from 2 to 5 psi. The switch action shall be SPDT.

2.9.4 Solenoid-Operated Pneumatic (EP) Valves

Each valve shall have three-port operation: common, normally open, and normally closed. Each valve shall have an outer cast-aluminum body and internal parts of brass, bronze, or stainless steel. The air connection shall be a 3/8-inch NPT threaded connection. Valves shall be rated for 50 psi when used in a control system that operates at 25 psi or less, or 150 psi when used in a control system that operates in the range of 25 to 100 psi.

2.10 INDICATING DEVICES

2.10.1 Thermometers

2.10.1.1 Piping System Thermometers

Piping system thermometers shall have brass, malleable iron or aluminum alloy case and frame, clear protective face, permanently stabilized glass tube with indicating-fluid column, white face, black numbers, and a 9-inch scale. Thermometers for piping systems shall have rigid stems with straight, angular, or inclined pattern.

2.10.1.2 Non-Averaging Air-Duct Thermometers

Air-duct thermometers shall have perforated stem guards and 45-degree adjustable duct flanges with locking mechanism.

2.10.1.3 Averaging Air-Duct Thermometers

Averaging thermometers shall have no less than 3-1/2 inch dial, with black legend on white background, and pointer traveling through a 270-degree arc.

2.10.1.4 Accuracy

Thermometers shall have an accuracy of plus or minus 1 percent of scale range. Thermometers shall have a range suitable for the application.

2.10.2 Pressure Gauges

Gauges shall be 2 inch (nominal) size, back-connected, suitable for field or panel mounting as required, shall have black legend on white, background, and shall have a pointer traveling through a 270-degree arc. Accuracy shall be plus or minus 3 percent of scale range. Gauges shall meet requirements of ASME B40.1.

2.10.2.1 Pneumatic Actuator Gauges

Gauges for indicating signal output to pneumatic actuators shall have an outer scale of 3 to 15 psi in 1-psi graduations.

2.10.2.2 Air-Storage Tank and Filter and Dryer Gauge

Gauges for air-storage tanks and gauge for use before and after dirt-and-oil filters or dryers, shall have a scale of 0 to 160 psi with 2-psi graduations.

2.10.2.3 Hydronic-System Gauges

Gauges for hydronic-system applications shall have ranges and graduations as shown.

2.10.2.4 Control Panel Main Air Gauge

Panel mounted gauge for control system main air shall have a scale of 0 to 30 psi with 1 psig graduation.

2.10.3 Low Differential Pressure Gauges

Gauges for low differential-pressure measurements shall be 4-1/2 inch (nominal) size with two sets of pressure taps, and shall have a diaphragm-actuated pointer, white dial with black figures, and pointer zero adjustment. Gauges shall have ranges and graduations as shown. Accuracy shall be plus or minus 2 percent of scale range.

2.11 SINGLE-LOOP CONTROLLERS

2.11.1 Controller Features

The controller shall be a microprocessor-based single-loop device that does not require Contractor-generated software. The controller shall meet 47 CFR 15, for Class A computing devices. The controller panel cutout shall be 3.62 inches by 3.62 inches. The controller shall have field scalable process variable, a remote setpoint analog input and an analog output with adjustable high and low end limits and proportional control manual reset adjustment. The analog output shall result from proportional, integral and derivative (PID) control. The analog output shall be configurable as direct acting and reverse acting. The controller shall have keyboard, display, auto/manual selection for control of its analog output, remote setpoint adjustment/local setpoint adjustment selection with adjustable high-end and low-end limits, ratio and bias adjustments on remote setpoint input, operator-initiated self-tune/manual-tune selection, anti-reset wind-up feature, and 2 independent SPDT contact-closure outputs (PV alarm and PV deviation alarm). The controller shall be configurable to power-up in manual with local setpoint control, in automatic with local setpoint control and in automatic with remote setpoint control. The range of hysteresis adjustment shall be not smaller than from 1 percent to 5 percent of process variable input span. The controller shall power the analog output loop to 20 milliamperes when connected to a load of 600 ohms. The

controller shall be capable of retransmitting the process variable to 20 milliamperes when connected to 600 ohms. The controller shall have 5-year battery backup to store operating parameters or shall have nonvolatile memory.

2.11.2 Parameter Input and Display

All control parameters shall be entered and displayed directly, in the correct engineering units, through a series of keystrokes on a front-panel display with a 3-1/2 digit, 7-segment display, with decimal point and polarity indication. The use of this display shall allow manual interrogation of setpoint, mode constants, and values of the process variable and output.

2.11.3 Controller Electrical Requirements

Each controller shall be powered by 120 volts ac. Power consumption shall not be greater than 20 watts. Each controller shall provide electrical noise isolation between the ac power line and the process variable input, remote setpoint input, and output signals and of not less than 100 db at 60 Hz common-mode rejection ratio, and not less than 60 db at 60 Hz normal-mode rejection ratio.

2.11.4 Controller Accuracy

The controller shall have an accuracy of plus or minus 0.30 percent of input span, plus or minus 1 digit.

2.11.5 Self-Tuning

The controller self-tuning operation shall apply proportional, integral, and derivative modes of control and shall modify the mode constants as required. Self-tuning shall only be in operation when selected from the front panel.

2.11.6 Manual-Tuning

The controller manual-tuning operation shall provide proportional, integral, and derivative control modes, or any combination thereof, by means of individual mode constant adjustments. These adjustments shall be set for the appropriate value if a particular control mode action is desired, or to zero if that particular mode is not desired. The proportional-mode constant shall be adjustable from 0 to 200 percent of input signal range, the integral-mode constant shall be adjustable from 0 to 20 repeats per minute, and derivative-mode constant shall be adjustable from 0 to 5 minutes.

2.12 CONTROL DEVICES AND ACCESSORIES

Except where otherwise specified, control device and accessory input impedance shall not exceed 250 ohms.

2.12.1 Function Modules

Function modules shall accept mAdc analog input signals to produce mAdc analog output signals or contact output signals. Modules shall have zero and span adjustments for analog outputs, and setpoint adjustments for contact outputs. Module output span accuracy shall be plus or minus 1 percent of input span. Modules shall be rail-mounted as shown. Power

consumption shall not be greater than 5 watts.

2.12.1.1 Minimum-Position Switch and Temperature-Setpoint Device

Minimum-position switch and temperature-setpoint device shall accept a 1000 ohms potentiometer input and shall produce a steady analog output. In temperature setpoint applications the potentiometer shall be single-turn, suitable for wall mounting, enclosed in a locking metal or heavy duty plastic enclosure and shall have a graduated dial corresponding to the range of the setpoint adjustment. In a minimum position switch application the potentiometer shall be mounted on or internal to the minimum position switch. The device shall have its input signal electrically or optically isolated from output. Mounting socket shall be an 8 pin base with pins 1, 2, 3 ac power input, 4, 5, 6 input signal, 7, 8, output signal.

2.12.1.2 Signal-Inverter Modules

Signal inverter shall accept an analog input signal and shall have sufficient output capacity to drive the output signal through a circuit with an impedance of not less than 600 ohms. The output shall be electrically isolated from the input and the device shall have a moisture resistant coating. Mounting socket shall be an 8 pin base with pins 1, 2, 3 ac power input, 4, 5, 6 input signal, 7, 8, output signal.

2.12.1.3 High-Low Signal Selector

High-low signal-selector modules shall accept analog input signals and select either the highest or the lowest input signal as the output signal. The signal selector shall be powered by 120 Vac and the output signal shall be electrically isolated from the input signal.

2.12.1.4 Sequencer Modules

Sequencer modules shall provide fixed time-delayed sequencing of one or more contact transfers from an analog input signal. Sequencers shall return all contacts to their zero input signal condition when power is interrupted.

2.12.1.5 Loop Driver Modules

Loop driver module shall accept an analog input signal and shall have a circuit input impedance not greater than 100 ohms. The loop driver module shall have sufficient output capacity to drive the output signal through a circuit with an impedance range of not less than 1000 ohms. The output shall be electrically isolated from the input and the device shall have moisture resistant coating. Mounting socket shall be an 8 pin base with pins 1, 2, 3 ac power input, 4, 5, 6 input signal, 7, 8 output signal.

2.12.2 Relays

Relays shall be 2-pole, double-throw (2PDT) with a 10-ampere resistive rating at 120 Vac, and shall have an enclosed 120-Vac coil with 8-pin blade connectors, and a matching rail-mounted socket. Power consumption shall not be greater than 3 watts.

2.12.3 Time-Delay Relays

Time delay relays shall be 2PDT with 8-pin connectors, dust cover, and a matching rail-mounted socket. Adjustable timing range shall be 0 to 3

minutes. Power consumption shall not be greater than 3 watts.

2.12.4 Time Clocks

Each time clock shall be a 365-day programmable timing device with 4 independently timed circuits. Each clock shall have a manual scheduling keypad and an alphanumeric display of all timing parameters. Timing parameters shall include: date in Gregorian calendar for month, day and day-of-month indication; and 24-hour time-of-day display, with one-minute resolution for programming the ON and OFF times for each circuit. Each clock shall allow programming of each circuit for 12 holiday periods for either ON or OFF events for any selected duration of the 365-day program. Each clock shall have capacity for programming 4 ON events and 4 OFF events for each circuit. The programmed events shall be assignable to a 365-day schedule. Each clock shall have automatic Standard Time and Daylight Saving Time adjustment, by input of the appropriate dates. Each time clock shall have automatic leap year correction. Each clock shall be provided with 4-day battery backup. Power consumption shall not be greater than 10 watts.

2.12.5 Current-to-Pneumatic (IP) Transducers

The transducers shall be 2-wire current-to-pressure transmitters that convert a 4-to-20 mAdc input signal to a 3-15 psi, or a 15-3 psi, field-reversible pneumatic output, with a conversion accuracy of plus or minus 2 percent of full scale, including linearity and hysteresis. Input impedance shall not exceed 250 ohms. Air consumption shall not be greater than 0.25 scfm.

2.12.6 Regulated Power Supplies

Each power supply shall provide a 24-Vdc linear supply at not less than 2 amperes, with regulation to 0.05 percent of output voltage. Each power supply shall have a fused input, and shall be protected from voltage surges and power-line transients. The power supply output shall be protected against overvoltage and short circuits. Power supply loading shall not be greater than 1.2 amperes.

2.12.7 Power Line Conditioner (PLC)

PLCs shall be furnished for each controller panel. The PLCs shall provide both voltage regulation and noise rejection. The PLCs shall be of the ferroresonant design, with no moving parts and no tap switching, while electrically isolating the secondary from the power line side. The PLCs shall be sized for 125 percent of the actual connected kva load. Characteristics of the PLC shall be as follows:

a. At 85 percent load, the output voltage shall not deviate by more than plus or minus 1 percent of nominal voltage when the input voltage fluctuates between minus 20 percent to plus 10 percent of nominal voltage.

b. During load changes of zero to full load, the output voltage shall not deviate by more than plus or minus 3 percent of nominal voltage. Full correction of load switching disturbances shall be accomplished within 5 cycles, and 95 percent correction shall be accomplished within 2 cycles of the onset of the disturbance.

c. Total harmonic distortion shall not exceed 3-1/2 percent at full

load.

2.13 PILOT LIGHTS AND MANUAL SWITCHES

Pilot lights and switches shall be rectangular devices arranged in a horizontal matrix as shown. Momentary switches shall be non-illuminated. Interlocking switches shall have separately illuminated sections. Device illumination shall be by light-emitting diode or neon lamp.

2.14 HVAC SYSTEM CONTROL PANELS

2.14.1 Panel Assembly

The panel shall be fabricated as shown, and the devices shall be mounted as shown. Each panel shall be fabricated as a bottom-entry connection point for control-system electric power, control-system main air source, control-system wiring, pneumatic tubing, interconnection of control systems, interconnection of starters and external shutdown devices, and energy monitoring and control systems (EMCS) interface. Each panel shall have an operating temperature rise of not greater than 20 degrees F above an ambient temperature of 100 degrees F. The control panel shall be factory assembled and shipped to the job site as a single unit.

2.14.2 Panel Electrical Requirements

Each control panel shall be powered by nominal 120 volts ac , fused at 5 amps, and terminating at the panel on terminal blocks. Instrument cases shall be grounded. Interior panel, interior door, and exterior panel enclosure shall be grounded.

2.14.3 Enclosure

The enclosure for each panel shall be a NEMA 12 single-door wall-mounted box conforming to NEMA 250, with continuous hinged and gasketed exterior door with print pocket and key lock, continuous hinged interior door, interior back panel, and ventilation louvers in back surface as shown. Inside finish shall be white enamel, and outside finish shall be gray primer over phosphatized surfaces.

2.14.4 Mounting and Labeling

Controllers, pilot lights, switches, IP's, and pressure gauge shall be mounted on the interior door as shown. Power conditioner, fuses and duplex outlet shall be mounted on the interior of the cabinet as shown. All other components housed in the panel shall be mounted on the interior back panel surface of the enclosure, behind the door on rails as shown. Controllers and gauges shall be identified by a plastic or metal nameplate that is mechanically attached to the panel. The nameplate shall have the inscription as shown. Lettering shall be cut or stamped into the nameplate to a depth of not less than 1/64 inch, and shall show a contrasting color, produced by filling with enamel or lacquer or by the use of a laminated material. Painting of lettering directly on the surface of the interior door or panel is not permitted.

2.14.5 Wiring and Tubing

2.14.5.1 Current-to-Pneumatic Transducers (IP)

Current-to-Pneumatic Transducers (IP) shall be piped to bulkhead fittings

in the bottom of the panel with a 2-inch loop to accommodate IP replacement and shall be wired to identified terminal blocks.

2.14.5.2 Wiring Interconnections

Wiring shall be installed in wiring ducts in such a way that devices can be added or replaced without disturbing wiring that is not affected by the change. Wiring to all devices shall have a 4-inch wiring loop in the horizontal wiring duct at each wiring connection. There shall be no wiring splices within the control panel. All interconnections required for power or signals shall be made on device terminals or panel terminal blocks, with not more than two wires connected to a terminal.

2.14.5.3 Terminal Blocks

Terminal blocks shall be arranged in groups as shown. Instrument signal grounds at the same ground reference level shall end at a grounding terminal for connection to a common ground point. Wiring-shield grounds at the same reference level shall end at a grounding terminal for connection to a common ground point. Grounding terminal blocks shall be identified by reference level.

2.14.5.4 Wiring Identification

All wiring connected to controllers, time clocks and function modules shall be identified by function and polarity with full word identifiers, i.e., process variable, input, remote setpoint input and control output.

2.14.6 EMCS Terminal Blocks

Terminal blocks shall be provided for connections to EMCS as shown. Analog signals shall require only the removal of jumpers to interface to EMCS.

2.15 COMPRESSED-AIR STATIONS

2.15.1 Air-Compressor Assembly

The vertical air compressor shall be a high-pressure compressing unit with electric motor. The compressor shall be equipped with a motor with totally enclosed belt guard, and operating-pressure switch, safety-relief valves, gauges, intake filter and intake silencer, and combination-type magnetic starter with undervoltage protection and thermal-overload protection for each phase, and shall be supported by a steel base mounted on an air-storage tank. The air compressor shall provide the compressed air required for control operation while operating not more than one-third of the time. The air-storage tank shall be fabricated for a working pressure of not less than 200 psig, and constructed and certified in accordance with ASME BPV VIII Div 1. The tank shall be of sufficient volume so that no more than six compressor starts per hour are required with the starting pressure switch differential set at 20 psig. The tank shall be provided with an automatic condensate drain trap with manual override feature.

2.15.2 Compressed-Air Station Specialties

2.15.2.1 Pressure Regulator, Filter and Refrigerated Dryer

A pressure regulator and refrigerated dryer shall be provided in the air outlet line of the air-storage tank. The dryer shall be of the size required for the full air-delivery capacity of the compressor. The air

shall be dried at a pressure of not less than 70 psi to a temperature not greater than 35 degrees F. The dryer shall be provided with an automatic condensate drain trap with manual override feature. The refrigerant used in the dryer shall be one of the fluorcarbon gases and have an ozone depletion potential of not more than 0.05. Two combination dirt and coalescing-type oil filters in parallel with shut-off valves and pressure regulator shall be provided in the dryer discharge. Pressure regulators of the relieving type are not acceptable at this location. Each filter shall be 100 percent efficient for particles down to 0.3 micrometer in diameter. Each filter bowl shall be rated for 150 psi maximum working pressure. A pressure regulator and safety valve shall be provided downstream of the filter.

2.15.2.2 Flexible Pipe Connections

The flexible pipe connectors shall be designed for 150 psi and 250 degrees F service, and shall be constructed of rubber, tetrafluoroethylene resin, or braided corrosion-resistant steel, bronze, monel, or galvanized steel. The connectors shall be suitable for the service intended and may have threaded or soldered ends. The length of the connectors shall be as recommended by the manufacturer for the service intended.

2.15.2.3 Vibration-Isolation Units

The vibration-isolation units shall be standard products with published loading ratings, and shall be single rubber-in-shear, double rubber-in-shear, or spring type.

2.16 ELECTRONIC VARIABLE AIR VOLUME (VAV) TERMINAL UNIT CONTROLS

2.16.1 VAV Terminal Units

The VAV terminal units shall be as specified in Section 15895 AIR SUPPLY, DISTRIBUTION, VENTILATION, AND EXHAUST SYSTEM.

2.16.2 Terminal-Unit Controls

2.16.2.1 Box Control Device

Controls for pressure-independent boxes shall consist of a velocity-sensing device in the primary air entering the box, a room temperature sensing element, a damper actuator, and an adjustable microprocessor-based VAV box controller. Each controller shall operate a damper for cooling and a duct coil for heating. Actuator shall open or close the device to which it is applied within 6 minutes. Terminal unit controls shall meet the requirements of UL 916 and 47 CFR 15.

2.16.2.2 Communication-and-Programming Device

One hand-held communication-and-programming device with instruction manual, plus one additional hand-held communicating device and instruction manual per 100 terminal units, shall be provided. The communication-and-programming device shall connect to the controller directly or to a jack at the room-temperature-sensing element location. The communication-and-programming device shall be used to read and set minimum velocity, maximum velocity, heating setpoint, and cooling setpoint, and to read velocity and space temperature.

2.17 MANUAL EMERGENCY FAN SHUTOFF SWITCHES

Manual emergency fan shutdown switches shall be provided for air distribution fan in accordance with NFPA 90A. Switches shall be the manual-reset type. Switches shall be located and mounted in an accessible manner, approximately 48 inches above the finished floor. Switches shall be properly identified in etched rigid plastic placards.

PART 3 EXECUTION

3.1 GENERAL INSTALLATION CRITERIA

The HVAC control system shall be completely installed and ready for operation, as specified and shown. Dielectric isolation shall be provided where dissimilar metals are used for connection and support. Penetrations through and mounting holes in the building exterior shall be made watertight. The HVAC control-system installation shall provide clearance for control-system maintenance by maintaining access space between coils, access space to mixed-air plenums, and other access space required to calibrate, remove, repair, or replace control-system devices. The control-system installation shall not interfere with the clearance requirements for mechanical and electrical system maintenance.

3.1.1 Device-Mounting Criteria

Devices mounted in or on piping or ductwork, on building surfaces, in mechanical/electrical spaces, or in occupied space ceilings shall be installed in accordance with manufacturers' recommendations and as shown. Control devices to be installed in piping and ductwork shall be provided with all required gaskets, flanges, thermal compounds, insulation, piping, fittings, and manual valves for shutoff, equalization, purging, and calibration. Strap-on temperature sensing elements shall not be used except as specified.

3.1.2 Wiring Criteria

Wiring external to control panels, including low-voltage wiring, shall be installed in metallic raceways. Wiring shall be installed without splices between control devices and HVAC control panels. Instrumentation grounding shall be installed as necessary to prevent ground loops, noise, and surges from adversely affecting operation of the system. Cables and conductors wires shall be tagged at both ends, with the identifier shown on the shop drawings, in accordance with the requirements of Section 16415 ELECTRICAL WORK, INTERIOR. Other electrical work shall be as specified in Section 16415 ELECTRICAL WORK, INTERIOR and as shown.

3.1.3 Controller Output Loop Impedance Limitation

Controller output loops shall be constructed so that total circuit impedance connected to the analog output of a single-loop controller shall not exceed 600 ohms.

3.2 CONTROL-SYSTEM INSTALLATION

3.2.1 Damper Actuators

Actuators shall not be mounted in the air stream. Multiple actuators operating a common damper shall be connected to a common drive shaft. Actuators shall be installed so that their action shall seal the damper to the extent required to maintain leakage at or below the specified rate and

shall move the blades smoothly.

3.2.2 Local Gauges for Actuators

Pneumatic actuators shall have an accessible and visible receiver gauge installed in the tubing lines at the actuator as shown.

3.2.3 Room-Instrument Mounting

Room instruments shall be mounted so that their sensing elements are 5 feet above the finished floor unless otherwise shown. Temperature setpoint device shall be recess mounted.

3.2.4 Low-Temperature-Protection Thermostats

For each 20 square feet of coil-face area, or fraction thereof, a thermostat shall be provided to sense the temperature at the location shown. The thermostat sensing element shall be installed in a serpentine pattern.

3.2.5 Averaging-Temperature Sensing Elements

Sensing elements shall have a total-element minimum length equal to one linear foot per square foot of duct cross-sectional area.

3.2.6 Foundations and Housekeeping Pads

Foundations and housekeeping pads shall be provided for the HVAC control-system air compressors.

3.2.7 Compressed-Air Stations

The air-compressor assembly shall be mounted on vibration eliminators, in accordance with ASME BPV VIII Div 1 for tank clearance. The air line shall be connected to the tank with a flexible pipe connector. Compressed-air-station specialties shall be installed with all required tubing, including condensate tubing to a floor drain.

3.2.8 Duct Static-Pressure Sensing Elements and Transmitters

The duct static-pressure sensing element and transmitter sensing point shall be located approximately two-thirds of the distance from the supply fan to the end of the duct with the greatest pressure drop.

3.2.9 Indication Devices Installed in Piping and Liquid Systems

Gauges in piping systems subject to pulsation shall have snubbers. Gauges for steam service shall have pigtail fittings with cock. Thermometers and temperature sensing elements installed in liquid systems shall be installed in thermowells.

3.2.10 Tubing

3.2.10.1 Control System Installation

The control system shall be installed so that pneumatic lines are not exposed to outside-air temperatures. All tubes and tube bundles exposed to view shall be installed neatly in lines parallel to the lines of the building. Tubing between panels and actuators in mechanical/electrical

spaces shall be routed so that the lines are easily traceable.

3.2.10.2 Pneumatic Lines In Mechanical/Electrical Spaces

In mechanical/electrical spaces, pneumatic lines shall be plastic tubing or copper tubing. Horizontal and vertical runs of plastic tubes or soft copper tubes shall be installed in raceways dedicated to tubing. The dedicated raceways shall be supported every 6 feet for horizontal runs and every 8 feet for vertical runs. Tubing not installed in raceways shall be hard-drawn copper tubing with sweat fittings and valves, supported every 6 feet for horizontal runs and every 8 feet for vertical runs.

3.2.10.3 Pneumatic Lines External To Mechanical/Electrical Spaces

Tubing external to mechanical/electrical spaces, when run in plenum ceilings, shall be soft copper with sweat fittings, supported every 8 feet. Tubing not in plenum spaces shall be soft copper with sweat fittings supported every 8 feet or shall be plastic tubing in raceways dedicated to tubing.

3.2.10.4 Connection to Ductwork

Tubing for connection of sensing elements and transmitters to ductwork shall be plastic tubing.

3.2.10.5 Tubing in Concrete

Tubing in concrete shall be installed in rigid conduit. Tubing in walls containing insulation, fill, or other packing materials shall be installed in raceways dedicated to tubing.

3.2.10.6 Final Connection to Actuators

Final connections to actuators shall be plastic tubing 12 inches long and unsupported at the actuator.

3.2.10.7 Connection to HVAC Control Panel

A manual valve shall be provided at each HVAC control panel to allow shutoff of main air. Pneumatic connections to HVAC control panels shall be made at bulkhead fittings. Final connections to HVAC control panel bulkhead fitting shall be exposed tubing approximately 12 inches long.

3.3 CONTROL SEQUENCES OF OPERATION

3.3.1 General Requirements

These requirements shall apply to all primary HVAC systems unless modified herein. The sequences describe the actions of the control system for one direction of change in the HVAC process analog variable, such as temperature, humidity or pressure. The reverse sequence shall occur when the direction of change is reversed.

3.3.1.1 HVAC System Supply Fan Operating

HVAC system outside-air, return-air, and relief-air dampers shall function as described hereinafter for specific modes of operation. Interlocked exhaust fans shall be stopped in the unoccupied and ventilation delay modes and their dampers shall be closed. Interlocked exhaust fans shall run in

the occupied mode, and their dampers shall open. Cooling-coil control valves shall function as described hereinafter for the specific modes of operation unless their control is assumed by the freeze-protection system.
Heating coil valves shall be under control.

3.3.1.2 HVAC System Supply Fan Not Operating

When an HVAC system is stopped, all interlocked fans shall stop, the outside-air and relief-air dampers shall close, the return-air damper shall open, the system shall pump down if it has a pump down cycle, all humidification shall stop, and all cooling-coil valves for coils located indoors shall close to the coil. Heating-coil valves shall remain under control.

3.3.2 Perimeter-Radiation Control Sequence

All Modes - A room thermostat, located as shown, shall operate a control valve to maintain the setpoint as shown.

3.3.3 Unit-Heater and Cabinet-Unit-Heater

All Modes - A wall-mounted thermostat with an "AUTO-OFF" switch located as shown, shall cycle the fan and valve to maintain its setpoint as shown when the switch is in the "AUTO" position. When the switch is in the "OFF" position, the fan shall stop and the valve shall be closed.

3.4 COMMISSIONING PROCEDURES

3.4.1 General Procedure

3.4.1.1 Evaluations

The Contractor shall make the observations, adjustments, calibrations, measurements, and tests of the control systems, tune the controllers, set the clock schedule, and make any necessary control-system corrections to ensure that the systems function as described in the sequence of operation.
The Contractor shall permanently record, on system equipment schedule, the final setting of controller proportional, integral and derivative constant settings, setpoint, manual reset setting, maximum and minimum controller output, and ratio and bias settings, in units and terminology specific to the controller.

3.4.1.2 Item Check

An item-by-item check of the sequence of operation requirement shall be performed using Steps 1 through 4 in the specified control system commissioning procedures. Steps 1, 2, and 3 shall be performed with the HVAC system shut down; Step 4 shall be performed after the HVAC system has been started. Signals used to change the mode of operation shall originate from the actual HVAC control device intended for the purpose, such as the time clock. External input signals to the HVAC control panel (such as EMCS, starter auxiliary contacts, and external systems) may be simulated in Steps 1, 2, and 3. With each operational-mode change signal, Pilot lights and HVAC-panel output-relay contacts shall be observed to ensure that they function. All terminals assigned to EMCS shall be checked and observed to ensure that the proper signals are available.

3.4.1.3 Weather-Dependent Test Procedures

Weather-dependent test procedures that cannot be performed by simulation shall be performed in the appropriate climatic season. When simulation is used, the Contractor shall verify the actual results in the appropriate season.

3.4.1.4 Configuration

The Contractor shall configure each controller for its specified service.

3.4.1.5 Two-Point Accuracy Check

A two-point accuracy check of the calibration of each HVAC-control-system sensing element and transmitter shall be performed by comparing the HVAC-control-panel readout to the actual value of the variable measured at the sensing element and transmitter or air-flow measurement station location. Digital indicating test instruments shall be used, such as digital thermometers, motor-driven psychrometers, and tachometers. The test instruments shall be at least twice as accurate as the specified sensing element-to-controller readout accuracy. The calibration of the test instruments shall be traceable to NIST standards. The first check point shall be with the HVAC system in the shutdown condition, and the second check point shall be with the HVAC system in an operational condition. Calibration checks shall verify that the sensing element-to-controller readout accuracies at two points are within the specified product accuracy tolerances. If not, the device shall be recalibrated or replaced and the calibration check repeated.

3.4.1.6 Insertion, Immersion Temperature

Insertion-temperature and immersion-temperature sensing element and transmitter-to-controller readout calibration accuracy shall be checked at one physical location along the axis of the sensing element.

3.4.1.7 Averaging Temperature

Averaging-temperature sensing element and transmitter-to-controller readout calibration accuracy shall be checked every 2 feet along the axis of the sensing element in the proximity of the sensing element, for a maximum of 10 readings. These readings shall then be averaged.

3.4.1.8 Controller Stations

The Contractor shall use the controllers' MANUAL/AUTOMATIC stations as the means of manipulating control devices, such as dampers and valves, to check IP operation and to effect stable conditions prior to making measurement checks.

3.4.1.9 Controller-Tuning Procedure

The Contractor shall perform a controller-tuning procedure, which shall consist of setting the initial proportional, integral, and derivative (PID) mode constants, controller setpoints, and logging the settings. Tuning shall be self-tuning operation by the controller unless manual tuning is necessary.

3.4.1.10 Controller Manual-Tuning Procedure

Where required, the controller manual-tuning procedure shall be performed in three steps. Using a constant-temperature-setpoint controller as an

example, these steps are:

a. Step A:

(1) The controller MANUAL/AUTO station shall be indexed to the AUTO position and the integral- and derivative-mode constants set to zero.

(2) The proportional-mode constant shall be set to an initial setting of 8 percent. (This corresponds to 1.5 psi per degree F or 2.0 ma per degree F proportional controller output change for a 100-degree F transmitter span.) This causes the controller output signal to vary from live zero output to full output for an input signal change representing an 8-degree F change.

(3) Controllers for other variables, such as relative humidity and static pressure, shall have their proportional-mode constants set initially in a similar manner for an achievable output range proportional to the transmitter span.

b. Step B:

(1) The controller temperature setpoint shall be set at any achievable temperature. The controller output and transmitter input shall be observed.

(2) If the transmitter input continuously oscillates above and below the setpoint without settling at a fixed value, or if such oscillation increases, the proportional-mode constant is too small.

(3) If the proportional-mode constant is too small, increase it in steps until the transmitter input indicates stable control at any temperature, provided that the controller output is not at either extreme of the output range.

(4) If the temperature control point slowly drifts toward or away from the controller setpoint, the proportional-mode constant is too large. Its setting shall be decreased in steps until oscillations occur as described in the preceding paragraphs, and then the setting shall be increased until stable control occurs.

(5) A step change in controller setpoint shall be introduced. This should cause the controller to overshoot the setpoint slightly, with each subsequent overshoot peak value decreasing by a factor of 2/3 until stable control is achieved at, above, or below the setpoint.

(6) Next, the integral-mode constant setting shall be increased in small steps, and setpoint changes shall be introduced until control point and controller setpoint coincide at stable control. This should happen consistently after a setpoint change within a short time, such as 5 to 10 minutes.

c. Step C:

(1) Unless the HVAC process variable changes rapidly, the derivative-mode constant setting can remain at zero.

(2) If derivative control is needed, the derivative-mode constant

shall be gradually increased.

(3) Step changes in controller setpoint shall be introduced, and the derivative-mode constant setting adjusted until stable control is achieved.

3.4.1.11 Setting the Controller

After the controller manual-tuning procedure is complete, the controller shall be set at the setpoint as shown.

3.4.2 Space-Temperature-Controlled Perimeter Radiation

The heating medium shall be turned on, and the thermostat temperature setpoint shall be raised. The valve shall open. The thermostat temperature shall be lowered and the valve shall close. The thermostat shall be set at the setpoint shown.

3.4.3 Unit Heater and Cabinet Unit Heater

The "OFF/AUTO" switch shall be placed in the "OFF" position. Each space-thermostat temperature setting shall be turned up so that it makes contact and turns on the unit-heater fans. The unit-heater fans shall not start. The "OFF/AUTO" switch shall be placed in the "AUTO" position. The unit-heater fans shall start. Each space-thermostat temperature setting shall be turned down, and the unit-heater fans shall stop. The thermostats shall be set at their temperature setpoints as shown. The results of testing of one of each type of unit shall be logged.

3.4.4 Fan-Coil-Unit

The dual-temperature hydronic system shall be set to heating. Each space thermostat temperature setting shall be turned up so that it makes contact and turns the fan-coil unit on. The fan-coil unit fan shall start and the valves shall open to flow through the coils. Each space thermostat temperature setting shall be turned down and the fan-coil unit fans shall stop. The valves close to flow through the coils. The dual-temperature hydronic system shall be switched to cooling. Each space thermostat temperature setting shall be turned up; contact shall be broken and the fan-coil unit fans stop. The valves shall close to flow through the coil. Each space thermostat temperature setting shall be turned down. The fan-coil unit fans start and the valves open to flow through the coils. The thermostats shall be set at the temperature setpoints as shown. The results of testing of one of each type of unit shall be logged.

3.4.5 Single Building Hydronic-Heating with Hot Water Boiler

Steps for installation shall be as follows:

a. Step 1 - System Inspection: The HVAC system shall be observed in its shutdown condition. It shall be verified that power and main air are available at the HVAC system control panel.

b. Step 2 - Calibration Accuracy Check with HVAC System Shutdown: Readings shall be taken with a digital thermometer at each temperature- sensing element location. Each controller display shall be read, and the thermometer and controller-display readings logged. The calibration accuracy of the sensing element-to-controller readout for outside-air temperature and

system-supply temperature shall be checked.

c. Step 3 - Actuator Range Adjustments: A signal shall be applied to the actuator using the controller "MANUAL/AUTO" station in "MANUAL." The proper operation of the actuators and positioners for all valves shall be verified visually. The signal shall be varied from live zero of 4 ma or 3 psi to 20 ma or 15 psig, and it shall be verified that the actuators travel from zero stroke to full stroke within the signal range. It shall be verified that all sequenced actuators move from zero stroke to full stroke in the proper direction, and move the connected device in the proper direction from one extreme position to the other. Example: NC actuators are closed at 4 ma or 3 psi and are open at 20 ma or 15 psi. The signal levels that move the controlled device to its extreme positions shall be logged.

d. Step 4 - Control-System Commissioning:

(1) The outside-air temperature controller "MANUAL/AUTO" station shall be indexed to the "MANUAL" position and the two-point calibration sensing element-to-controller readout accuracy check for the outside-air temperature performed. The controller proportional band adjustment, the setpoint, the manual reset, and the maximum controller output shall be set to achieve the outside-air temperature schedule as shown.

(2) A signal shall be applied to simulate that the outside-air temperature is above the setpoint as shown. It shall be verified that Pump and Boiler stop. A signal shall be applied to simulate that the outside-air temperature is below the setpoint as shown. It shall be verified that Pump start and Boiler operates.

(3) The system's supply-temperature controller "MANUAL/AUTO" station shall be indexed to the "MANUAL" position, and the two-point calibration accuracy check of the sensing element-to-controller readout for the system-supply temperature performed. The controller shall be placed in the remote-setpoint mode. The remote setpoint for temperature schedule shall be set as shown. The controller "MANUAL/AUTO" station shall be indexed to the "AUTO" position, and the controller setup and tuning procedures performed. The controller shall be set at a system-supply temperature setpoint within the schedule as shown and the mode-constant setpoints logged. Signals of 8 ma and 16 ma shall be sent to the remote setpoint from the outside-air temperature controller, to verify that the controller setpoint changes to the appropriate values. The outside-air temperature controller's "MANUAL/AUTO" station shall be indexed to "AUTO."

(4) An occupied-mode signal shall be applied. Each space-temperature controller "MANUAL/AUTO" station shall be indexed to "MANUAL." The calibration accuracy check of sensing element-to-controller readout for each space temperature shall be performed, and the values logged. The controller shall be placed in the remote-setpoint mode. Setpoint shall be set for 70 degrees F at midrange, 55 degrees F at the low end, and 85 degrees F at the high end. The proper action of the temperature-setpoint device at the space-temperature sensing element and transmitter location shall be verified. Each controller "MANUAL/AUTO" station shall be indexed to the "AUTO" position and the controller-tuning

procedure performed. An unoccupied-mode signal shall be applied and it shall be verified that the controller setpoint changes to the unoccupied-mode setting. The temperature setpoint device shall be set to the space-temperature setpoint as shown.

3.4.6 Variable-Air-Volume Control System with Return Fan

Steps for installation shall be as follows:

a. Step 1 - System Inspection: The HVAC system shall be observed in its shutdown condition. It shall be verified that power and main air are available at the HVAC system control panel, and that the outside-air and relief-air dampers are closed, the return-air damper and return/relief-fan inlet vanes are open, and the supply-fan inlet vanes and cooling-coil valve are closed.

b. Step 2 - Calibration Accuracy Check with HVAC System Shutdown: Readings shall be taken with a digital thermometer at each temperature sensing element location. Each controller display shall be read, and the thermometer and controller-display readings logged. The calibration accuracy of the sensing element-to-controller readout for outside-air, return-air, mixed-air, and cooling-coil discharge-air temperatures shall be checked. The supply-air flow and return-air flow shall be read, using a digital indicating velometer, and the velometer and controller-display readings logged. The flows shall read zero.

c. Step 3 - Actuator Range Adjustments: A signal to the actuator shall be applied, using the controller "MANUAL/AUTO" station in "MANUAL." The proper operation of the actuators and positioners for all dampers and valves shall be visually verified. The signal shall be varied from live zero of 4 ma or 3 psi to 20 ma or 15 psi, and it shall be verified that the actuators travel from zero stroke to full stroke within the signal range. It shall be verified that all sequenced and parallel-operated actuators move from zero stroke to full stroke in the proper direction, and move the connected device in the proper direction from one extreme position to the other. Example: NC actuators are closed at 4 ma or 3 psi and are open at 20 ma or 15 psi. The signal levels that move the controlled device to its extreme positions shall be logged.

d. Step 4 - Control-System Commissioning:

(1) With the fans ready to start, the ventilation-delay-mode signal shall be applied, and it shall be verified that the ventilation-delay pilot light turns on. The occupied-mode signal shall be applied, and it shall be verified that the occupied-mode pilot light turns on and that Supply Fan and Return Fan start. It shall be verified that the outside-air damper and relief-air damper are closed, the return-air damper is open, and the cooling-coil valve and inlet vanes are under control, by slightly changing the controller output. The ventilation-delay-mode signal shall be released, and it shall be verified that the ventilation-delay-mode pilot light turns off and the outside-air, return-air and relief-air dampers come under control by changing the controller output.

(2) The minimum-outside-air-mode signal shall be applied, and it

shall be verified that the economizer pilot light is off. It shall be verified that the minimum outside-air dampers are open and the outside air dampers are closed.

(3) The starter switch of Return Fan shall be turned to the OFF position, and the inlet vane damper shall be opened. With Supply Fan running, a high-static-pressure input signal shall be simulated at the device by pressure input to the sensing device. HVAC system shutdown shall be observed It shall be verified that the high-static pilot light turns on; and contact output at EMCS terminals shall be verified. The HVAC system shall be restarted by manual reset, and it shall be verified that the high-static pilot light turns off.

(4) The supply-fan static-pressure controller "MANUAL/AUTO" station shall be indexed to the "MANUAL" position, and a two-point accuracy check of sensing element-to-controller readout shall be performed. The controller shall be placed in the local setpoint mode. The controller "MANUAL/AUTO" station shall be indexed to the "AUTO" position, and the controller-tuning procedure performed. The controller shall be set at the specified static-pressure setpoint, and the mode-constant setpoints logged.

(5) Each VAV terminal unit controller's minimum-flow and maximum-flow setpoints shall be set at the same setting. This will prevent the VAV-box damper from modulating under space-temperature control and will achieve a constant supply-duct-system pressure drop. The return-fan Variable Frequency Drive shall be placed under control, and the starter switch shall be turned to the "AUTO" position so that the fan starts. The "MANUAL/AUTO" station of the return-fan air-volume controller shall be indexed to the "MANUAL" position, and the two-point calibration accuracy check of sensing element-to-controller readout shall be performed. The controller shall be placed in the remote-setpoint mode. Using the supply-duct static-pressure controller's "MANUAL" function, operate the supply-fan Variable Frequency Drive to change the supply-fan flow, and the controller ratio and bias settings shall be set to control at 9,445 cfm at 4-ma input and 16,180 cfm at 20-ma input. The supply-fan flow shall be changed to verify that the return-flow setpoint tracks the supply-fan flow with the proper flow difference. A 12-ma signal shall be sent for tuning at setpoint midrange. The controller "MANUAL/AUTO" station shall be indexed to the "AUTO" position and the controller tuning procedure shall be performed. A 4-ma, 12-ma and 20-ma signals shall be sent to the remote setpoint input, and it shall be verified that the return fan goes from minimum-delivery setpoint to midrange delivery setpoint, and then to maximum-delivery setpoint. The supply-duct static-pressure controller shall be placed in "AUTO."

(6) The mixed-air temperature controller "MANUAL/AUTO" station shall be indexed to the "MANUAL" position. The controller output shall be changed to open the outside-air damper slightly. The two-point calibration accuracy check of sensing element-to-controller readout for outside-air, return-air, and mixed-air temperatures shall be performed. The temperature-controller "MANUAL/AUTO" switch shall be indexed to the "AUTO" position. The economizer-mode input signal shall be

applied, and it shall be verified that the economizer pilot light turns on. The controller-tuning procedure shall be performed. The controller shall be placed in the local setpoint mode, and set at the temperature setpoint as shown.

(7) The cooling-coil temperature controller "MANUAL/AUTO" station shall be indexed to the "MANUAL" position, and the two-point calibration accuracy check of sensing element-to-controller readout shall be performed. The controller shall be placed in the remote-setpoint mode. The remote setpoint shall be set for plus 5-degree F change from setpoint at 20-ma input, and minus 5-degree F change from setpoint at 4-ma input. A 12-ma signal shall be sent to the remote setpoint for tuning at midrange. The controller "MANUAL/AUTO" station shall be indexed to the "AUTO" position, and the controller-tuning procedure performed. Signals of 8 ma and 16 ma shall be sent to the remote setpoint and it shall be verified that the controller setpoint changes to the appropriate values. The controller shall be placed in the local setpoint mode and set at the temperature setpoint as shown.

(8) An unoccupied-mode signal shall be applied, and it shall be verified that the occupied-mode pilot light turns off, the HVAC system shuts down, and the control system assumes the specified shutdown conditions. The night-thermostat temperature setting shall be turned upward, and it shall be verified that the HVAC system starts; the setting shall be turned downward, and it shall be verified that the HVAC system stops. The night thermostat shall be set at the setpoint as shown.

(9) With the HVAC system running, a filter differential-pressure switch input signal shall be simulated, at the device. It shall be verified that the filter pilot light turns on, and contact output at EMCS terminals shall be verified. The differential-pressure switch shall be set at the setpoint as shown.

(10) With the HVAC system running, a low-temperature-protection trip input signal shall be simulated, at the device. The HVAC system shall shut down, and contact output at EMCS terminals shall be verified. It shall be verified that the low-temperature pilot light turns on. The thermostat shall be set at the specified setting. The HVAC system shall be restarted by manual reset, and it shall be verified that the pilot light turns off.

(11) With the HVAC system running, a smoke-detector trip input signal shall be simulated, at each device. Control-device actions and interlock functions as described in the Sequence of Operation shall be verified. Simulation shall be performed without false-alarming any Life Safety systems. It shall be verified that the HVAC system shuts down and the smoke-detector pilot light turns on. Contact output at EMCS terminals shall be verified. The detectors shall be reset. The HVAC system shall be restarted by manual reset, and it shall be verified that the pilot light turns off.

(12) For each VAV terminal unit, velocity setpoints shall be set for minimum and maximum flow, and temperature setpoints shall be set for the heating/cooling dead band. The actions of the controller, the operation of the damper, and the operation of heating shall be verified. It shall be verified that space

temperature is maintained.

3.4.7 Single-Zone with Hydronic Heating and Cooling Coils; No Return Fan

Steps for installation shall be as follows:

a. Step 1 - System Inspection: The HVAC system shall be verified in its shutdown condition. The system shall be checked to see that power and main air are available at the HVAC system control panel, that the outside-air damper, relief-air damper, and cooling coil valve are closed, and that the return-air damper is open.

b. Step 2 - Calibration Accuracy Check with HVAC System Shutdown: Readings shall be taken with a digital thermometer at each temperature-sensing element location. Each controller display shall be read, and the thermometer and controller-display readings logged. The calibration accuracy of the sensing element-to-controller readout for outside-air, return-air, and space temperatures shall be checked.

c. Step 3 - Actuator Range Adjustments: A signal shall be applied to the actuator, using the controller "MANUAL/AUTO" station in "MANUAL." The proper operation of the actuators and positioners for all dampers and valves shall be visually verified. The signal shall be varied from live zero of 4 ma or 3 psi to 20 ma or 15 psi, and it shall be verified that the actuators travel from zero stroke to full stroke within the signal range shall be verified. It shall be verified that all sequenced and parallel-operated actuators move from zero stroke to full stroke in the proper direction, and move the connected device in the proper direction from one extreme position to the other. Example: NC actuators are closed at 4 ma or 3 psi and are open at 20 ma or 15 psi. The signal levels that move the controlled device to its extreme positions shall be logged.

d. Step 4 - Control-System Commissioning:

(1) With the fan ready to start, the ventilation-delay-mode signal shall be applied, and it shall be verified that the ventilation-delay-mode pilot light turns on. The occupied-mode signal shall be applied, and it shall be verified that the occupied-mode pilot light turns on and that Supply Fan starts. It shall be verified that the outside-air and relief-air dampers are closed, the return-air damper is open, and the heating-coil and cooling-coil valves are under control, by slightly changing the controller outputs. The ventilation-delay-mode signal shall be released, and it shall be verified that the ventilation-delay-mode pilot light turns off and that the outside-air, return-air, and relief-air dampers come under control by changing the controller output.

(2) The minimum-outside-air-mode signal shall be applied. It shall be verified that the outside-air damper opens to minimum position and the economizer pilot light is off.

(3) The space-temperature controller "MANUAL/AUTO" station shall be indexed to the "MANUAL" position, and the calibration accuracy check for sensing element-to-controller readout performed. The controller shall be placed in the remote-setpoint mode. Setpoint

shall be set for 70 degrees F at midpoint, 55 degrees F at the low end, and 85 degrees F at the high end. Proper operation of the temperature setpoint device at the space-temperature sensing element and transmitter location shall be verified. The controller "MANUAL/AUTO" station shall be indexed to the "AUTO" position, and the controller-tuning procedure performed. The temperature setpoint device shall be set to the space temperature setpoint as shown.

(4) An unoccupied-mode signal shall be applied, and it shall be verified that the occupied-mode pilot light turns off, the HVAC system shuts down, and the control system assumes the specified shutdown conditions. The night-thermostat temperature setting shall be turned upward, and it shall be verified that the HVAC system starts; the setting shall be turned downward, and it shall be verified that the HVAC system stops. The night thermostat shall be set at the setpoint as shown.

(5) With the HVAC system running, a filter differential-pressure switch input signal shall be simulated, at the device. It shall be verified that the filter pilot light turns on, and contact output at EMCS terminals shall be verified. The differential-pressure switch shall be set at the setpoint as shown.

(6) With the HVAC system running, a low-temperature-protection thermostat trip input signal shall be simulated, at the device. HVAC system shutdown shall be verified; the low-temperature pilot light shall turn on, and contact output at EMCS terminals shall be verified. The thermostat shall be set at the setpoint as shown. The HVAC system shall be restarted by manual reset, and it shall be verified that the pilot light turns off.

(7) With the HVAC system running, a smoke-detector trip input signal at each detector shall be simulated, and control-device actions and interlock functions as described in the Sequence of Operation shall be verified. Simulation shall be performed without false-alarming any Life Safety systems. It shall be verified that the HVAC system shuts down and that the smoke-detector pilot light turns on, and contact output at EMCS terminals shall be verified. The detectors shall be reset. The HVAC system shall be restarted by manual reset, and it shall be verified that the pilot light turns off.

3.5 TESTING, COMMISSIONING, AND BALANCING

3.5.1 Site Testing

The Contractor shall provide all personnel, equipment, instrumentation, and supplies necessary to perform all site testing, calibration, adjusting and commissioning. The tests shall not be conducted during scheduled seasonal off-periods of base heating and cooling systems. Wiring shall be tested for continuity and for ground, open, and short circuits. Tubing systems shall be tested for leaks. HVAC control panels shall be pretested off-site as a functioning assembly ready for field connections, calibration, adjustment, and commissioning of the operational HVAC control system. The Contractor shall obtain written Government approval of the specific site-testing procedures prior to any test. Written notification of any planned site-testing, commissioning or tuning shall be given to the Government at least 14 calendar days prior to any test.

3.5.2 Control System Calibration, Adjustments, and Commissioning

All instrumentation and controls shall be calibrated and the specified accuracy shall be verified using test equipment with calibration traceable to NIST standards. Mechanical control devices shall be adjusted to operate as specified. Control system commissioning shall be performed for each HVAC system.

3.5.3 Performance Verification Test

The Contractor shall demonstrate compliance of the HVAC control system with the contract documents. Using test plans and procedures previously approved by the Government, the Contractor shall demonstrate all physical and functional requirements of the project. The performance verification test procedures shall explain, step-by-step, the actions and expected results that will demonstrate that the control systems perform in accordance with the sequences of operation. The performance verification test shall not be started until after receipt by the Contractor of written permission by the Government, based on the Contractor's written certification of successful completion of Contractor site testing as specified.

3.5.4 Coordination with HVAC System Balancing

The Contractor shall tune the HVAC control system after all air-system and hydronic-system balancing has been completed, minimum damper positions set and a report has been issued. Commissioning, except for tuning of controllers, may be performed prior to or simultaneous with HVAC system balancing.

3.5.5 Posted Instructions

Instructions on 8-1/2-by-11-inch sheets and half-size plastic laminated drawings for each system, showing the final installed conditions, shall be placed in each HVAC control panel. The posted instructions shall include the control sequence, control schematic, ladder diagram, wiring diagram, valve schedules, damper schedules, panel arrangement drawings, commissioning procedures, controller configuration check sheet with final configuration record, preventive maintenance instructions and single-loop controller operators manual.

3.6 TRAINING

3.6.1 Training-Course Requirements

A training course shall be conducted for 2 operating staff members designated by the Contracting Officer. The training period, for a total of 32 hours of normal working time, shall be conducted within 30 days after successful completion of the performance verification test. The training course shall be conducted at the project site. The Contractor shall be responsible for furnishing all audiovisual equipment and 2 sets of all other training materials and supplies. A training day is defined as 8 hours of classroom instruction, including two 15-minute breaks and excluding lunchtime, Monday through Friday, during the daytime shift in effect at the training facility. The Contractor shall submit an outline for the course, with a proposed time schedule. Approval of the planned training schedule shall be obtained from the Government at least 30 days prior to the start of the training.

3.6.2 Training-Course Content

For guidance in planning the required instruction, the Contractor shall assume that attendees will have a high school education or equivalent, and are familiar with HVAC systems. The training course shall cover all of the material contained in the Operating and Maintenance Instructions, the layout and location of each HVAC control panel, the layout of one of each type of unitary equipment and the locations of each, the location of each system-control device external to the panels, the location of the compressed-air station, preventive maintenance, troubleshooting, diagnostics, calibration, adjustment, commissioning, tuning, and repair procedures. Typical systems and similar systems may be treated as a group, with instruction on the physical layout of one such system. The results of the performance verification test and the calibration, adjustment and commissioning report shall be presented as benchmarks of HVAC control-system performance by which to measure operation and maintenance effectiveness.

-- End of Section --

SECTION TABLE OF CONTENTS

DIVISION 15 - MECHANICAL

SECTION 15990

TESTING, ADJUSTING AND BALANCING OF HVAC SYSTEMS

10/89

PART 1 GENERAL

1.1 REFERENCES
1.2 GENERAL REQUIREMENTS
1.3 INSTRUMENT ACCURACY REQUIREMENTS
1.4 SUBMITTALS

PART 2 PRODUCTS (Not Applicable)

PART 3 EXECUTION

3.1 TESTING AND BALANCING
3.1.1 General
3.1.2 Air Systems
3.1.2.1 General Balancing Methods
3.1.2.2 Specific Systems
3.1.3 Hydronic Systems
3.1.3.1 General Balancing Methods
3.1.3.2 Specific Systems
3.1.4 Marking of Setting
3.1.5 Marking of Test Ports
3.2 CONTROL SYSTEMS

-- End of Section Table of Contents --

SECTION 15990

TESTING, ADJUSTING AND BALANCING OF HVAC SYSTEMS
10/89

PART 1 GENERAL

1.1 REFERENCES

The publications listed below form a part of this specification to the extent referenced. The publications are referred to in the text by basic designation only.

AMERICAN SOCIETY OF HEATING, REFRIGERATING AND AIR CONDITIONING ENGINEERS (ASHRAE)

ASHRAE 111	(1988) Practices for Measurement, Testing, Adjusting, and Balancing of Building Heating, Ventilation, Air-Conditioning and Refrigeration Systems

ASSOCIATED AIR BALANCE COUNCIL (AABC)

AABC MN-1	(1989) National Standards for Testing and Balancing Heating, Ventilating, and Air Conditioning Systems

NATIONAL ENVIRONMENTAL BALANCING BUREAU (NEBB)

NEBB-01	(1991) Procedural Standards for Testing-Adjusting-Balancing of Environmental Systems

NATIONAL FIRE PROTECTION ASSOCIATION (NFPA)

NFPA 90A	(1993) Installation of Air Conditioning and Ventilating Systems

SHEET METAL & AIR CONDITIONING CONTRACTORS' NATIONAL ASSOCIATION (SMACNA)

SMACNA-07	(1993) HVAC Systems - Testing, Adjusting and Balancing

1.2 GENERAL REQUIREMENTS

The Contractor shall select AABC MN-1, NEBB-01, SMACNA-07 or ASHRAE 111 as the standard for providing testing, adjusting and balancing of air and water systems. The selected standard shall be used throughout the project. Testing, adjusting, and balancing shall be accomplished by a firm certified for testing and balancing by Associated Air Balance Council (AABC) or National Environmental Balancing Bureau (NEBB). Prior to testing, adjusting, and balancing, the Contractor shall verify that the systems have been installed and are operating as specified. Approved detail drawings and all other data required for each system and/or component to be tested shall be made available at the jobsite during the

entire testing, adjusting and balancing effort. The Contractor shall verify that all balancing devices are properly installed to permit testing, adjusting and balancing and that all duct leakage tests have been completed prior to testing, adjusting and balancing. The Contracting Officer shall be notified in writing of all equipment, components, or balancing devices, that are damaged, incorrectly installed, or missing, as well as any design deficiencies that will prevent proper testing, adjusting, and balancing. Testing, adjusting, and balancing shall not commence until approved by the Contracting Officer. Instrumentation accuracy shall be in accordance with the standard selected in this paragraph.

1.3 INSTRUMENT ACCURACY REQUIREMENTS

All instrumentation shall be checked for accuracy before beginning testing, adjusting and balancing procedures. Instrument accuracy shall be in accordance with the standard selected in paragraph GENERAL REQUIREMENTS. Checks may be carried out against similar equipment maintained specifically for checking purposes or by the manufacturer or a recognized testing facility. All instrumentation used for testing shall be calibrated within 6 months of use. Pitot tubes and U-tube manometers do not require checking. In no case shall the instrumentation accuracy be less than specified by the instrument manufacturer. Any instrument falling out of calibration during the process of balancing and testing shall be recalibrated or removed from the site and replaced by a properly calibrated instrument. No instruments shall be allowed to remain on-site that are not in calibration.

1.4 SUBMITTALS

Government approval is required for submittals with a "GA" designation; submittals having an "FIO" designation are for information only. The following shall be submitted in accordance with Section 01300 SUBMITTAL PROCEDURES:

SD-09 Reports

Testing and Balancing; GA.

Three copies of a preliminary report, 30 days before balancing commences. The report shall be organized by specific systems and shall clearly identify each item of equipment to be tested, adjusted, and balanced. The appropriate test procedures and measurements to be taken for each item of equipment shall be listed. Instrument calibration records shall be provided on forms shown in AABC MN-1 or SMACNA-07. Manufacturer's specified accuracy shall be shown. The report shall include floor plans showing all measurement locations and types of measurements to be made. All related data necessary for testing, balancing, and adjusting, including fan curves and pump curves, shall be included. A system readiness checklist, similar to that shown in SMACNA-07, shall be included. The report shall contain a listing of the deficiencies of all systems to be tested, adjusted and balanced and the corrective action taken. The report shall contain a schedule for the testing and balancing. Six copies of the final report on forms shown in AABC MN-1 or SMACNA-07, 30 days after completion of the test and balance operation. Data shall be in a hard bound cover identifying the project name, location, date of submittal, name of Contractor, and a general title indicating the specific area and type of work, and shall be signed by a registered professional engineer, employed by the test and balance firm, who has a minimum of 2 years experience in testing, adjusting and balancing work. The final report shall include a

summary describing test methods, test results, and major corrective actions taken. The report shall include as-tested floor plans showing all measurement locations and types of measurements made. The air handling unit data shall include a static pressure profile diagram, and pitot tube traverses where possible. The VAV terminal data shall include maximum and minimum air flows, for design and actual conditions, and shall be supported with summaries which show the air outlet totals for each VAV terminal and the VAV terminal totals for each air handling unit. Air distribution data shall include coded drawings which show the exact location of each air outlet. Pump data shall include pump efficiency. Data for chillers, heating and cooling coils, and heat exchangers, shall include heat balance calculations.

All instruments that are recalibrated and brought back onto the jobsite after being found to be out of calibration shall have recalibration records submitted on forms shown in AABC MN-1 or SMACNA-07.

SD-13 Certificates

Qualification; FIO.

Qualification data, 90 days prior to testing and balancing operations. The test and balance firm shall be certified by the Associated Air Balance Council (AABC) or the National Environmental Balancing Bureau (NEBB). The lead balancing technician shall be qualified by AABC or NEBB and his qualification data shall include past experience on at least five similar projects.

PART 2 PRODUCTS (Not Applicable)

PART 3 EXECUTION

3.1 TESTING AND BALANCING

3.1.1 General

The facility shall be essentially complete with final ceiling, walls, windows, doors and partitions in place. Doors and windows surrounding each area to be balanced shall be closed during testing and balancing operations. Air systems shall be complete and operable with balancing dampers, ducting, diffusers, returns, flow control boxes and control components in place. Exhaust fans and fume hoods shall be operational. Hydronic systems shall be complete and operable with balancing valves, flow meters, coils, pumps, piping and control components in place. All measurements and adjustments shall be made using procedures described in standard selected in paragraph GENERAL REQUIREMENTS. Air motion and distribution from air terminals shall be as shown. Smoke tests may be used to demonstrate proper air distribution from air terminals. All data including deficiencies encountered and corrective action taken shall be recorded. If a system cannot be adjusted to meet the design requirements, the Contractor shall promptly notify the Contracting Officer in writing.

3.1.2 Air Systems

Clean filters shall be installed at the beginning of the testing, adjusting, and balancing effort. Each system shall be adjusted until all flow quantities are within plus ten percent and minus zero percent. Dampers shall be checked for tight shutoff. Air leakage around dampers shall be verified. Fans shall be checked for correct direction of rotation

and proper speed shall be verified. Fire and smoke dampers shall be tested at system design air flow to ensure proper closure in accordance with NFPA 90A and manufacturer's instructions prior to building occupancy.

3.1.2.1 General Balancing Methods

In addition to the requirements for specific systems, flows in supply, exhaust and return air systems shall be balanced using the methods in standard selected in paragraph GENERAL REQUIREMENTS. Throttling losses shall be limited. Air flow adjustments shall be made by first adjusting the fan speed to meet the design flow conditions. Fan speed adjustment may not be required for fan motors which are less than one horsepower, or if throttling results in no greater than an additional 1/3 horsepower draw above that required if the fan speed were adjusted. Flows and pressures shall be checked in all main risers and supply ducts at all supply, exhaust and return fan discharges. All flows shall be recorded before and after each adjustment.

3.1.2.2 Specific Systems

All special or additional procedures for testing and balancing shall be in accordance with the applicable requirements of the standard selected in paragraph GENERAL REQUIREMENTS. If a system has diversity, only the required quantity of wide open terminals shall be used to meet the design air flow.

3.1.3 Hydronic Systems

All valves and control components shall be open or set as required for maximum system flow. Each system shall be adjusted until all flow quantities are within the tolerances of the standard selected in paragraph GENERAL REQUIREMENTS. Pumps shall be checked for proper speed. Pump activation signal and deactivation signal valves shall be verified. Pump motor current shall be checked at maximum design flow. Variable speed pumping systems shall be tested at a minimum of four separate flow conditions to simulate design diversity.

3.1.3.1 General Balancing Methods

In addition to the requirements for specific systems, flows in piping, coils and other hydronic system components shall be balanced using the flow meter, equipment pressure drop or pump curve methods in accordance with the applicable provisions of the standard selected in paragraph GENERAL REQUIREMENTS. Flows shall be checked in all main risers and branches and condenser water lines and at all heating and cooling coils, heat exchangers, boilers, chillers, and pump discharges. Pressure taps on all pumps shall be made at factory suction and discharge tappings where available. All flows shall be recorded before and after each adjustment.

3.1.3.2 Specific Systems

Where specific systems require special or additional procedures for testing and balancing, such procedures shall be in accordance with the standard selected in paragraph GENERAL REQUIREMENTS. If a system has diversity, only the required quantity of wide-open terminals shall be used to meet the design water flow.

a. Primary-Secondary: Primary-secondary systems shall be treated as separate systems. Primary systems shall be balanced first with

the secondary systems running. Secondary systems shall then be balanced.

b. Summer-Winter: Summer-winter systems shall be balanced in the summer mode of operation. Following completion of the summer-mode balancing, equipment used for winter operation shall be balanced.

c. Four-Pipe Systems: Four-pipe systems shall be considered as two two-pipe systems, and balanced separately. Three-pipe systems shall be balanced by treating each loop separately at its maximum flow.

3.1.4 Marking of Setting

Following final acceptance of certified reports by the Contracting Officer, the setting of all HVAC adjustment devices including valves, splitters, and dampers shall be permanently marked by the testing and balancing engineer so that adjustment can be restored if disturbed at any time.

3.1.5 Marking of Test Ports

The testing and balancing engineer shall permanently and legibly mark and identify the location points of the duct test ports. If the ductwork has exterior insulation, these markings shall be made on the exterior side of the ductwork insulation. All penetrations through ductwork and ductwork insulation shall be properly sealed to prevent air leakage or loss of vapor barrier.

3.2 CONTROL SYSTEMS

Testing, adjusting, and balancing of the systems shall be coordinated with the control system installation. All control components shall be verified to be properly installed and operating as specified before proceeding with testing, adjusting, and balancing. Verification shall be in accordance with AABC MN-1.

-- End of Section --

SECTION TABLE OF CONTENTS

DIVISION 15 - MECHANICAL

SECTION 15995

COMMISSIONING OF HVAC SYSTEMS

01/93

PART 1 GENERAL

1.1 SUBMITTALS
1.2 SEQUENCING AND SCHEDULING

PART 2 PRODUCTS (Not Applicable)

PART 3 EXECUTION

3.1 COMMISSIONING TEAM AND CHECKLISTS
3.2 TESTS
3.2.1 Pre-Commissioning Checks
3.2.2 Functional Performance Tests

-- End of Section Table of Contents --

SECTION 15995

COMMISSIONING OF HVAC SYSTEMS
01/93

PART 1 GENERAL

1.1 SUBMITTALS

Government approval is required for submittals with a "GA" designation; submittals with "FIO" designation are for information only. The following shall be submitted in accordance with Section 01300 SUBMITTAL PROCEDURES:

SD-01 Data

Commissioning Team; GA.

List of team members who will represent the Contractor in the pre-commissioning checks and functional performance testing, at least 2 weeks prior to the start of pre-commissioning checks. Proposed revision to the list, prior to the start of the impacted work.

SD-06 Instructions

Test Procedures; GA.

Detailed procedures for pre-commissioning checks and functional performance tests, at least 4 weeks prior to the start of pre-commissioning checks.

SD-07 Schedules

Test Schedule; GA.

Schedule for pre-commissioning checks and functional performance tests, at least 2 weeks prior to the start of pre-commissioning checks.

SD-09 Reports

Test Reports; GA.

Completed pre-commissioning checklists and functional performance test checklists organized by system and by subsystem and submitted as one package. The results of failed tests shall be included along with a description of the corrective action taken.

1.2 SEQUENCING AND SCHEDULING

The work described in this Section shall begin only after all work required in related Sections, including Section 15950 HVAC CONTROL SYSTEMS, has been successfully completed, and all test and inspection reports and operation and maintenance manuals required in these Sections have been submitted and approved.

PART 2 PRODUCTS (Not Applicable)

PART 3 EXECUTION

3.1 COMMISSIONING TEAM AND CHECKLISTS

The Contractor shall designate team members to participate in the pre-commissioning checks and the functional performance testing specified herein. In addition, the Government will be represented by a representative of the Contracting Officer, the Design Agent's Representative, and the Using Agency. The team members shall be as follows:

Designation	Function
Q	Contractor's Chief Quality Control Representative
M	Contractor's Mechanical Representative
E	Contractor's Electrical Representative
T	Contractor's Testing, Adjusting, and Balancing Representative
C	Contractor's Controls Representative
D	Design Agent's Representative
O	Contracting Officer's Representative
U	Using Agency's Representative

Each checklist shown in appendices A and B shall be completed by the commissioning team. Acceptance by each commissioning team member of each pre-commissioning checklist item shall be indicated by initials and date unless an "X" is shown indicating that participation by that individual is not required. Acceptance by each commissioning team member of each functional performance test checklist shall be indicated by signature and date.

3.2 TESTS

The pre-commissioning checks and functional performance tests shall be performed in a manner which essentially duplicates the checking, testing, and inspection methods established in the related Sections. Where checking, testing, and inspection methods are not specified in other Sections, methods shall be established which will provide the information required. Testing and verification required by this section shall be performed during the Commissioning phase. Requirements in related Sections are independent from the requirements of this Section and shall not be used to satisfy any of the requirements specified in this Section. The Contractor shall provide all materials, services, and labor required to perform the pre-commissioning checks and functional performance tests. A pre-commissioning check or functional performance test shall be aborted if any system deficiency prevents the successful completion of the test or if any participating non-Government commissioning team member of which participation is specified is not present for the test. The Contractor shall reimburse the Government for all costs associated with effort lost due to tests that are aborted. These costs shall include salary, travel costs and per diem (where applicable) for Government commissioning team members.

3.2.1 Pre-Commissioning Checks

Pre-commissioning checks shall be performed for the items indicated on the checklists in Appendix A. Deficiencies discovered during these checks shall be corrected and retested in accordance with the applicable contract requirements.

3.2.2 Functional Performance Tests

Functional performance tests shall be performed for the items indicated on the checklists in Appendix B. Functional performance tests shall begin only after all pre-commissioning checks have been successfully completed. Tests shall prove all modes of the sequences of operation, and shall verify all other relevant contract requirements. Tests shall begin with equipment or components and shall progress through subsystems to complete systems. Upon failure of any functional performance test checklist item, the Contractor shall correct all deficiencies in accordance with the applicable contract requirements. The checklist shall then be repeated until it has been completed with no errors.

APPENDIX A

PRE-COMMISSIONING CHECKLISTS

Pre-commissioning checklist - Piping

For _____ Piping System

Checklist Item	Q	M	E	T	C	D	O	U
Installation								
a. Piping complete.	___	___	X	___	X	___	___	___
b. As-built shop drawings submitted.	___	___	X	___	X	___	___	___
c. Piping flushed and cleaned.	___	___	X	___	X	___	___	___
d. Strainers cleaned.	___	___	X	___	X	___	___	___
e. Valves installed as required.	___	___	X	___	X	___	___	___
f. Piping insulated as required.	___	___	X	___	X	___	___	___
g. Thermometers and gauges installed as required.	___	___	X	___	X	___	___	___
h. Verify operation of valves.	___	___	X	___	___	___	___	___
i. Air vents installed as specified.	___	___	X	X	X	___	___	___
j. Flexible connectors installed as specified.	___	___	X	X	X	___	___	___
k. Verify that piping has been labeled and valves identified as specified.	___	___	X	___	___	___	___	___
Testing, Adjusting, and Balancing (TAB)								
a. Hydrostatic test complete.	___	___	X	___	X	___	___	___
b. TAB operation complete.	___	___	X	___	___	___	___	___

Pre-commissioning Checklist - Ductwork

For Air Handler: _____

Checklist Item	Q	M	E	T	C	D	O	U
Installation								
a. Ductwork complete.	___	___	X	___	X	___	___	___
b. As-built shop drawings submitted.	___	___	X	___	X	___	___	___
c. Ductwork leak test complete.	___	___	X	___	X	___	___	___
NOTE: The first bracketed item d will be used for Army projects, the second for Air Force projects.								
d. Fire dampers, and access doors installed as required.	___	___	X	___	X	___	___	___
e. Ductwork insulated as required.	___	___	X	___	X	___	___	___
f. Thermometers and gauges installed as required.	___	___	___	___	___	___	___	___
g. Verify open/closed status of dampers.	___	___	X	___	X	___	___	___
h. Verify smoke dampers operation.	___	___	X	___	___	___	___	___
i. Flexible connectors installed as specified.	___	___	X	___	X	___	___	___
Testing, Adjusting, and Balancing (TAB)								
a. TAB operation complete.	___	___	X	___	X	___	___	___

Pre-commissioning Checklist - Variable Volume Air Handling Unit

For Air Handling Unit: AHU-1

Checklist Item	Q	M	E	T	C	D	O	U
Installation								
a. Vibration isolation devices installed.	___	___	X	X	X	___	___	___
b. Inspection and access doors are operable and sealed.	___	___	X	___	X	___	___	___
c. Casing undamaged.	___	___	X	X	X	___	___	___
d. Insulation undamaged.	___	___	X	X	X	___	___	___
e. Condensate drainage is unobstructed. (Visually verify drainage by pouring a cup of water into drain pan.)	___	___	X	X	X	___	___	___
f. Fan belt adjusted.	___	___	X	___	X	___	___	___
g. Manufacturer's required maintenance clearance provided.	___	___	X	X	X	___	___	___
Electrical								
a. Power available to unit disconnect.	___	___	___	X	X	___	___	___
b. Power available to unit control panel.	___	___	___	X	___	___	___	___
c. Proper motor rotation verified.	___	___	___	___	X	___	___	___
d. Verify that power disconnect is located within sight of the unit it controls.	___	___	___	X	___	___	___	___
a. Chilled water piping properly connected.	___	___	X	X	X	___	___	___
b. Chilled water piping pressure tested.	___	___	X	X	X	___	___	___
c. Hot water piping properly connected.	___	___	X	X	X	___	___	___
d. Hot water piping pressure tested.	___	___	X	X	X	___	___	___
e. Air vents installed on water coils with shutoff valves as specified.	___	___	X	X	X	___	___	___
f. Any damage to coil fins has been repaired.	___	___	X	___	X	___	___	___
Controls								
a. Control valves/actuators properly installed.	___	___	X	___	___	___	___	___
b. Control valves/actuators operable.	___	___	X	___	___	___	___	___

Pre-commissioning Checklist - Variable Volume Air Handling Unit

For Air Handling Unit: AHU-1

Checklist Item	Q	M	E	T	C	D	O	U
c. Dampers/actuators properly installed.	___	___	X	___	___	___	___	___
d. Dampers/actuators operable.	___	___	X	___	___	___	___	___
e. Verify proper location, installation and calibration of duct static pressure sensor.	___	___	X	___	___	___	___	___
f. Fan air volume controller operable.	___	___	X	___	___	___	___	___
g. Air handler controls system operational.	___	___	X	___	___	___	___	___
Testing, Adjusting, and Balancing (TAB)								
a. Construction filters removed and replaced.	___	___	X	___	___	___	___	___
b. TAB report submitted.	___	___	X	___	X	___	___	___
c. TAB results within +10%/-0% of cfm shown on drawings								
d. TAB results for outside air intake within +10%/-0% of both the minimum and maximum cfms shown on drawings.	___	___	X	___	X	___	___	___

Pre-commissioning Checklist - VAV Terminal

For VAV Terminal: _____

Checklist Item	Q	M	E	T	C	D	O	U
Installation								
a. VAV terminal in place.	___	___	X	X	X	___	___	___
b. VAV terminal ducted.	___	___	X	X	X	___	___	___
c. VAV terminal connected to controls.	___	___	X	X	___	___	___	___
d. Reheat coil connected to hot water pipe.	___	___	X	___	X	___	___	___
f. Manufacturer's required maintenance clearance provided.	___	___	X	X	X	___	___	___
Controls								
a. Cooling only VAV terminal controls set.	___	___	X	X	___	___	___	___
b. Cooling only VAV controls verified.	___	___	X	X	___	___	___	___
c. Reheat VAV terminal controls set.	___	___	X	X	___	___	___	___
d. Reheat terminal/coil controls verified.	___	___	X	X	___	___	___	___
Testing, Adjusting, and Balancing (TAB)								
a. Verify terminal maximum air flow set.	___	___	X	___	___	___	___	___
b. Verify terminal minimum air flow set.	___	___	X	___	___	___	___	___
c. TAB operation complete.	___	___	X	___	X	___	___	___

Pre-commissioning Checklist - Constant Volume Terminal

For VAV Terminal: _____

Checklist Item	Q	M	E	T	C	D	O	U
Installation								
a. VAV terminal in place.	___	___	X	X	X	___	___	___
b. VAV terminal ducted.	___	___	X	X	X	___	___	___
c. VAV terminal connected to controls.	___	___	X	X	___	___	___	___
d. Reheat coil connected to hot water pipe.	___	___	X	___	X	___	___	___
f. Manufacturer's required maintenance clearance provided.	___	___	X	X	X	___	___	___
Controls								
a. Cooling only VAV terminal controls set.	___	___	X	X	___	___	___	___
b. Cooling only VAV controls verified.	___	___	X	X	___	___	___	___
c. Reheat VAV terminal controls set.	___	___	X	X	___	___	___	___
d. Reheat terminal/coil controls verified.	___	___	X	X	___	___	___	___
Testing, Adjusting, and Balancing (TAB)								
a. Verify terminal maximum air flow set.	___	___	X	___	___	___	___	___
b. Verify terminal minimum air flow set.	___	___	X	___	___	___	___	___
c. TAB operation complete.	___	___	X	___	X	___	___	___

Pre-commissioning Checklist - Pumps

For Pump: _____

Checklist Item	Q	M	E	T	C	D	O	U
Installation								
a. Pumps grouted in place.	___	___	X	X	X	___	___	___
b. Pump vibration isolation devices functional.	___	___	X	X	X	___	___	___
c. Pump/motor coupling alignment verified.	___	___	X	X	X	___	___	___
d. Piping system installed.	___	___	X	X	X	___	___	___
e. Piping system pressure tested.	___	___	X	X	X	___	___	___
f. Pump not leaking.	___	___	X	X	X	___	___	___
g. Field assembled couplings aligned to meet manufacturer's prescribed tolerances.	___	___	X	X	X	___	___	___
Electrical								
a. Power available to pump disconnect.	___	___	___	X	X	___	___	___
b. Pump rotation verified.	___	___	___	X	X	___	___	___
c. Control system interlocks functional.	___	___	___	X	___	___	___	___
d. Verify that power disconnect is located within sight of the unit it controls.	___	___	___	X	___	___	___	___
Testing, Adjusting, and Balancing (TAB)								
a. Pressure/temperature gauges installed.	___	___	X	___	X	___	___	___
b. Piping system cleaned.	___	___	X	X	X	___	___	___
c. Chemical water treatment complete.	___	___	X	X	X	___	___	___
d. Water balance complete.	___	___	X	___	X	___	___	___
e. Water balance with design maximum flow.	___	___	X	___	X	___	___	___
f. TAB Report submitted.	___	___	X	___	X	___	___	___

Pre-commissioning Checklist - Packaged Air Cooled Chiller

For Chiller: _____

Checklist Item	Q	M	E	T	C	D	O	U
Installation								
a. Chiller properly piped.	___	___	X	___	___	___	___	___
b. Chilled water pipe leak tested.	___	___	X	X	X	___	___	___
c. Verify that refrigerant used complies with specified requirements.	___	___	X	X	X	___	___	___
d. Any damage to coil fins has been repaired.	___	___	X	___	X	___	___	___
e. Manufacturer's required maintenance clearance provided.	___	___	X	X	X	___	___	___
Electrical								
a. Power available to unit disconnect.	___	___	___	X	___	___	___	___
b. Power available to unit control panel.	___	___	___	X	___	___	___	___
c. Verify that power disconnect is located within sight of the unit it controls.	___	___	___	X	___	___	___	___
Controls								
a. Factory startup and checkout complete.	___	___	X	X	___	___	___	___
b. Chiller safety/protection devices tested.	___	___	X	X	___	___	___	___
c. Chilled water flow switch installed.	___	___	X	X	___	___	___	___
d. Chilled water flow switch tested.	___	___	X	X	___	___	___	___
e. Chilled water pump interlock installed.	___	___	X	X	X	___	___	___
f. Chilled water pump interlock tested.	___	___	___	X	___	___	___	___

Pre-commissioning Checklist - Hot Water Boiler

For Boiler: _____

Checklist Item	Q	M	E	T	C	D	O	U
Installation								
a. Boiler flue installed.	___	___	X	___	___	___	___	___
b. Boiler hot water piping installed.	___	___	X	___	___	___	___	___
c. Boiler hot water piping tested.	___	___	X	X	___	___	___	___
d. Boiler makeup water piping installed.	___	___	X	___	___	___	___	___
e. Boiler gas piping installed.	___	___	X	X	X	___	___	___
f. Boiler gas piping tested.	___	___	X	X	X	___	___	___
g. Manufacturer's required maintenance clearance provided.	___	___	X	___	___	___	___	___
Startup								
a. Boiler system cleaned and filled with treated water.	___	___	X	___	___	___	___	___
b. Boiler safety/protection devices, including high temperature burner shut-off, low water cutoff, flame failure, pre and post purge, have been tested.	___	___	___	X	___	___	___	___
c. Verify that PRV rating conforms to boiler rating.	___	___	___	X	___	___	___	___
d. Boiler water treatment system functional.	___	___	X	X	___	___	___	___
e. Boiler startup and checkout complete.	___	___	X	X	___	___	___	___
f. Combustion efficiency demonstrated.	___	___	X	___	X	___	___	___
Electrical								
a. Verify that power disconnect is located within sight of the unit served.	___	___	___	X	___	___	___	___
Controls								
a. Hot water pump interlock installed.	___	___	___	X	___	___	___	___
b. Hot water pump interlock tested.	___	___	___	X	___	___	___	___
c. Hot water heating system balanced.	___	___	X	X	___	___	___	___
d. Hot water heating controls operational.	___	___	X	X	___	___	___	___

Pre-commissioning Checklist - Hot Water Boiler

For Boiler: _____

Checklist Item	Q	M	E	T	C	D	O	U

Pre-commissioning Checklist - Fan Coil Unit

For Fan Coil Unit: _____

Checklist Item	Q	M	E	T	C	D	O	U
Installation								
a. Vibration isolation devices installed.	___	___	X	X	X	___	___	___
b. Access doors/removable panels are operable and sealed.	___	___	X	___	X	___	___	___
c. Casing undamaged.	___	___	X	X	X	___	___	___
d. Insulation undamaged.	___	___	X	X	X	___	___	___
e. Condensate drainage is unobstructed.	___	___	X	X	X	___	___	___
f. Fan belt adjusted.	___	___	X	___	X	___	___	___
g. Any damage to coil fins has been repaired.	___	___	X	___	X	___	___	___
h. Manufacturer's required maintenance clearance provided.	___	___	X	X	X	___	___	___
Electrical								
a. Power available to unit disconnect.	___	___	___	X	___	___	___	___
b. Power available to unit control panel.	___	___	___	X	___	___	___	___
c. Proper motor rotation verified.	___	___	___	___	X	___	___	___
d. Verify that power disconnect is located within sight of the unit it controls.	___	___	___	X	___	___	___	___
Coils								
a. Hot water piping properly connected.	___	___	X	___	___	___	___	___
b. Hot water piping pressure tested.	___	___	X	___	___	___	___	___
Controls								
a. Control valves/actuators properly installed.	___	___	X	___	___	___	___	___
b. Control valves/actuators operable.	___	___	X	X	___	___	___	___
c. Verify proper location and installation of thermostat.	___	___	X	___	___	___	___	___
Testing, Adjusting, and Balancing (TAB)								
a. Construction filters removed and replaced.	___	___	X	___	___	___	___	___

Pre-commissioning Checklist - Fan Coil Unit

For Fan Coil Unit: _____

Checklist Item	Q	M	E	T	C	D	O	U
b. TAB results +10%/-0% of cfm shown on drawings								
c. TAB Report submitted.	___	___	X	___	X	___	___	___

Pre-commissioning Checklist - Unit Heater

For Unit Heater: _____

Checklist Item	Q	M	E	T	C	D	O	U
Installation								
a. Hot water piping properly connected.	___	___	X	___	___	___	___	___
b. Hot water piping pressure tested.	___	___	X	___	___	___	___	___
c. Air vent installed on hot water coil with shutoff valve as specified.	___	___	X	X	X	___	___	___
d. Any damage to coil fins has been repaired.	___	___	X	___	X	___	___	___
e. Manufacturer's required maintenance/ operational clearance provided.	___	___	X	X	X	___	___	___
Electrical								
a. Power available to unit disconnect.	___	___	___	X	___	___	___	___
b. Proper motor rotation verified.	___	___	___	X	X	___	___	___
c. Verify that power disconnect is located within sight of the unit it controls.	___	___	___	X	___	___	___	___
d. Power available to electric heating coil.	___	___	___	X	___	___	___	___
Controls								
a. Control valves properly installed.	___	___	X	___	___	___	___	___
b. Control valves operable.	___	___	X	X	___	___	___	___
c. Verify proper location and installation of thermostat.	___	___	X	___	___	___	___	___
Testing, Adjusting, and Balancing (TAB)								
a. TAB Report submitted.	___	___	X	___	X	___	___	___

Pre-commissioning Checklist - Exhaust Fan

For Exhaust Fan: _____

Checklist Item	Q	M	E	T	C	D	O	U
Installation								
a. Fan belt adjusted.	___	___	X	___	X	___	___	___
Electrical								
a. Power available to fan disconnect.	___	___	___	X	___	___	___	___
b. Proper motor rotation verified.	___	___	___	___	X	___	___	___
c. Verify that power disconnect is located within sight of the unit it controls.	___	___	___	X	___	___	___	___
Controls								
a. Control interlocks properly installed.	___	___	___	X	___	___	___	___
b. Control interlocks operable.	___	___	___	X	___	___	___	___
c. Dampers/actuators properly installed.	___	___	X	___	___	___	___	___
d. Dampers/actuators operable.	___	___	X	___	___	___	___	___
e. Verify proper location and installation of thermostat.	___	___	X	___	___	___	___	___
Testing, Adjusting, and Balancing (TAB)								
a. TAB results +10%/-0% to cfm shown on drawings.	___	___	X	___	X	___	___	___
b. TAB Report submitted.	___	___	X	___	X	___	___	___

Pre-commissioning Checklist - HVAC System Controls

For HVAC System: _____

Checklist Item	Q	M	E	T	C	D	O	U
Installation								
a. As-built shop drawings submitted.	___	___	X	X	___	___	___	___
b. Layout of control panel matches drawings.	___	___	X	X	___	___	___	___
c. Framed instructions mounted in or near control panel.	___	___	X	X	___	___	___	___
d. Components properly labeled (on inside and outside of panel).	___	___	X	X	___	___	___	___
e. Control components piped and/or wired to each labeled terminal strip.	___	___	X	X	___	___	___	___
f. EMCS connection made to each labeled terminal strip as shown.	___	___	X	X	___	___	___	___
g. Control wiring and tubing labeled at all terminations, splices, and junctions.	___	___	X	X	___	___	___	___
h. Shielded wiring used on electronic sensors.	___	___	X	X	___	___	___	___
i. Air dryer installed as specified.	___	___	X	X	___	___	___	___
j. Water drain installed as specified.	___	___	X	X	___	___	___	___
Main Power and Control Air								
a. 110 volt AC power available to panel.	___	___	___	X	___	___	___	___
b. 20 psig compressed air available to panel.	___	___	X	X	___	___	___	___
Testing, Commissioning, and Balancing								
a. Testing, Commissioning, and Balancing Report submitted.	___	___	X	___	___	___	___	___

APPENDIX B

FUNCTIONAL PERFORMANCE TESTS CHECKLISTS

Functional Performance Test Checklist - Pumps

For Pump: _____

Prior to performing this checklist, ensure that for closed loop systems, system is pressurized and the make-up water system is operational or, for open loop systems, that the sumps are filled to the proper level.

1. Activate pump start using control system commands (all possible combination, on/auto, etc.). ON_____ AUTO_____ OFF_____

a. Verify pressure drop across strainer:

Strainer inlet pressure _____ psig
Strainer outlet pressure _____ psig

b. Verify pump inlet/outlet pressure reading, compare to Testing, Adjusting, and Balancing (TAB) Report, pump design conditions, and pump manufacturer's performance.

	DESIGN	TAB	ACTUAL
Pump inlet pressure (psig)	_____	_____	_____
Pump outlet pressure (psig)	_____	_____	_____

c. Operate pump at shutoff and at 100 percent of designed flow when all components are in full flow. Plot test readings on pump curve and compare results against readings taken from flow measuring devices.

	SHUTOFF	100 percent
Pump inlet pressure (psig)	_____	_____
Pump outlet pressure	_____	_____
Pump flow rate (gpm)	_____	_____

d. Operate pump at shutoff and at minimum flow or when all components are in full by-pass. Plot test readings on pump curve and compare results against readings taken from flow measuring devices.

	SHUTOFF	100 percent
Pump inlet pressure (psig)	_____	_____
Pump outlet pressure	_____	_____
Pump flow rate (gpm)	_____	_____

2. Verify motor amperage each phase and voltage phase to phase and phase to ground for both the full flow and the minimum flow conditions.

a. Full flow:

	PHASE 1	PHASE 2	PHASE 3
Amperage	_____	_____	_____
Voltage	_____	_____	
Voltage	_____		
Voltage to ground	_____	_____	_____

b. Minimum flow:

Functional Performance Test Checklist - Pumps

For Pump: _____

	PHASE 1	PHASE 2	PHASE 3
Amperage	_____	_____	_____
Voltage		_____	_____
Voltage		_____	
Voltage to ground	_____	_____	_____

3. Unusual vibration, noise, etc.

_____

_____

4. Certification: We the undersigned have witnessed the above functional performance tests and certify that the item tested has met the performance requirements in this section of the specifications.

Signature and Date

Contractor's Chief Quality Control Representative
_____

Contractor's Mechanical Representative
_____

Contractor's Electrical Representative
_____

Contractor's Testing, Adjusting and Balancing
_____
Representative

Contractor's Controls Representative
_____

Contracting Officer's Representative
_____

Using Agency's Representative
_____

Functional Performance Test Checklist - VAV Terminals

The Contracting officer will select VAV terminals to be spot-checked during the functional performance test. The number of terminals shall not exceed 10 percent.

1. Functional Performance Test: Contractor shall demonstrate operation of selected VAV boxes as per specifications including the following:

a. Cooling only VAV boxes:

(1) Verify VAV box response to room temperature set point adjustment. Turn thermostat to 5 degrees F above ambient and measure maximum air flow. Turn thermostat to 5 degrees F below ambient and measure minimum air flow.

Maximum flow _____ cfm
Minimum flow _____ cfm

(2) Check damper maximum/minimum flow settings.

Maximum flow setting _____ cfm
Minimum flow setting _____ cfm

b. Cooling with reheat VAV boxes:

(1) Verify VAV box response to room temperature set point adjustment. Turn thermostat to 5 degrees F above ambient and measure maximum air flow. Turn thermostat to 5 degrees F below ambient and measure minimum air flow.

Maximum flow _____ cfm
Minimum flow _____ cfm

(2) Check damper maximum/minimum flow settings.

Maximum flow setting _____ cfm
Minimum flow setting _____ cfm

Reheat coil operation range (full open to full closed) _____

2. Certification: We the undersigned have witnessed the above functional performance tests and certify that the item tested has met the performance requirements in this section of the specifications.

Signature and Date

Contractor's Chief Quality Control Representative
_____

Contractor's Mechanical Representative
_____

Contractor's Electrical Representative
_____

Contractor's Testing, Adjusting and Balancing

Functional Performance Test Checklist - VAV Terminals

_____
Representative

Contractor's Controls Representative
_____

Contracting Officer's Representative
_____

Using Agency's Representative
_____

Functional Performance Test Checklist - Constant Volume Terminals

The Contracting officer will select VAV terminals to be spot-checked during the functional performance test. The number of terminals shall not exceed 10 percent.

1. Functional Performance Test: Contractor shall demonstrate operation of selected VAV boxes as per specifications including the following:

a. Cooling only VAV boxes:

(1) Verify VAV box response to room temperature set point adjustment. Turn thermostat to 5 degrees F above ambient and measure maximum air flow. Turn thermostat to 5 degrees F below ambient and measure minimum air flow.

Maximum flow _____ cfm
Minimum flow _____ cfm

(2) Check damper maximum/minimum flow settings.

Maximum flow setting _____ cfm
Minimum flow setting _____ cfm

b. Cooling with reheat VAV boxes:

(1) Verify VAV box response to room temperature set point adjustment. Turn thermostat to 5 degrees F above ambient and measure maximum air flow. Turn thermostat to 5 degrees F below ambient and measure minimum air flow.

Maximum flow _____ cfm
Minimum flow _____ cfm

(2) Check damper maximum/minimum flow settings.

Maximum flow setting _____ cfm
Minimum flow setting _____ cfm

Reheat coil operation range (full open to full closed) _____

2. Certification: We the undersigned have witnessed the above functional performance tests and certify that the item tested has met the performance requirements in this section of the specifications.

Signature and Date

Contractor's Chief Quality Control Representative
_____

Contractor's Mechanical Representative
_____

Contractor's Electrical Representative
_____

Contractor's Testing, Adjusting and Balancing
_____

Functional Performance Test Checklist - Constant Volume Terminals

Representative

Contractor's Controls Representative

_____

Contracting Officer's Representative

_____

Using Agency's Representative

_____

Functional Performance Test Checklist - Variable Volume Air Handling Unit

For Air Handling Unit: AHU-1

Ensure that a slight negative pressure exists on inboard side of the outside air dampers throughout the operation of the dampers. Modulate OA, RA, and EA dampers from fully open to fully closed positions.

1. Functional Performance Test: Contractor shall verify operation of air handling unit as per specification including the following:

a. The following shall be verified when the supply fan operating supply and return fans operating mode is initiated:

(1) All dampers in normal position and fan inlet vanes modulate to maintain the required static pressure. _____

(2) All valves in normal position. _____

(3) System safeties allow start if safety conditions are met. _____

(4) VAV fan controller shall "soft-start" fan. _____

(5) Modulate all VAV boxes to minimum air flow and verify that the static pressure does not exceed the design static pressure Class shown. _____

b. Occupied mode of operation - economizer de-energized.

(1) Minimum outside air damper open. _____

(2) Minimum outside air damper closed. _____

(3) Return air damper open. _____

(4) Minimum relief air damper open. _____

(5) Minimum relief air damper closed. _____

(6) Chilled water control valve modulating to maintain leaving air temperature set point. _____

(7) Fan VAV controller receiving signal from duct static pressure sensor and modulating fan to maintain supply duct static pressure set point. _____

c. Occupied mode of operation - economizer energized.

(1) Outside air damper modulated to maintain mixed air temperature set point. _____

(2) Relief air damper modulates with outside air damper according to sequence of operation. _____

(3) Chilled water control valve modulating to maintain leaving air temperature set point. _____

Functional Performance Test Checklist - Variable Volume Air Handling Unit

For Air Handling Unit: AHU-1

(4) Hot water control valve modulating to maintain leaving air temperature set point. _____

(5) Fan VAV controller receiving signal from duct static pressure sensor and modulating fan to maintain supply duct static pressure set point. _____

d. Unoccupied mode of operation

(1) All dampers in normal position. _____

(2) Verify low limit space temperature is maintained as specified in sequence of operation. _____

e. The following shall be verified when the supply and return fans off mode is initiated:

(1) All dampers in normal position. _____

(2) All valves in normal position. _____

(3) Fan de-energizes. _____

f. Verify the chilled water coil control valve operation by setting all VAV's to maximum and minimum cooling.

	Max cooling	Min cooling
Supply air volume _____ cfm)	_____	_____
Supply air temp. (_____ degrees F)	_____	_____

g. Verify safety shut down initiated by smoke detectors. _____

h. Verify safety shut down initiated by low temperature protection thermostat. _____

2. Certification: We the undersigned have witnessed the above functional performance tests and certify that the item tested has met the performance requirements in this section of the specifications.

Signature and Date

Contractor's Chief Quality Control Representative
_____

Contractor's Mechanical Representative
_____

Contractor's Electrical Representative
_____

Functional Performance Test Checklist - Variable Volume Air Handling Unit

For Air Handling Unit: AHU-1

Contractor's Testing, Adjusting and Balancing
_____
Representative

Contractor's Controls Representative
_____

Contracting Officer's Representative
_____

Using Agency's Representative
_____

Functional Performance Test Checklist - Packaged Air Cooled Chiller

For Chiller: _____

1. Functional Performance Test: Contractor shall demonstrate operation of chilled water system as per specifications including the following: Start building air handler to provide load for chiller. Activate controls system chiller start sequence as follows.

a. Start chilled water pump and establish chilled water flow. Verify chiller-chilled water proof-of-flow switch operation. _____

b. Verify control system energizes chiller start sequence. _____

c. Verify chiller senses chilled water temperature above set point and control system activates chiller start. _____

d. Verify functioning of "soft start" sequence. _____

e. Shut off air handling equipment to remove load on chilled water system. Verify chiller shutdown sequence is initiated and accomplished after load is removed. _____

f. Restart air handling equipment one minute after chiller shut down.

Verify chiller restart sequence. _____

2. Verify chiller inlet/outlet pressure reading, compare to Testing, Adjusting, and Balancing (TAB) Report, chiller design conditions, and chiller manufacturer's performance data.

	DESIGN	TAB	ACTUAL
Chiller inlet pressure (psig)	_____	_____	_____
Chiller outlet pressure (psig)	_____	_____	_____

3. Verify chiller amperage each phase and voltage phase-to-phase and phase-to-ground.

	PHASE 1	PHASE 2	PHASE 3
Amperage	_____	_____	_____
Voltage	_____	_____	
Voltage	_____		
Voltage to ground	_____	_____	_____

4. Record the following information:

Ambient dry bulb temperature _____ degrees F
Ambient wet bulb temperature _____ degrees F
Entering chilled water temperature _____ degrees F
Leaving chilled water temperature _____degrees F

5. Unusual vibration, noise, etc.

_____

_____

Functional Performance Test Checklist - Packaged Air Cooled Chiller

For Chiller: _____

6. Certification: We the undersigned have witnessed the above functional performance tests and certify that the item tested has met the performance requirements in this section of the specifications.

Signature and Date

Contractor's Chief Quality Control Representative
_____

Contractor's Mechanical Representative
_____

Contractor's Electrical Representative
_____

Contractor's Testing, Adjusting and Balancing
_____
Representative

Contractor's Controls Representative
_____

Contracting Officer's Representative
_____

Using Agency's Representative
_____

Functional Performance Test Checklist - Hot Water Boiler

For Boiler: _____

1. Functional Performance Test: Contractor shall demonstrate operation of hot water system as per specifications including the following: Start building heating equipment to provide load for boiler. Activate controls system boiler start sequence as follows.

a. Start hot water pump and establish hot water flow. Verify boiler hot water proof-of-flow switch operation. _____

b. Verify control system energizes boiler start sequence. _____

c. Verify boiler senses hot water temperature below set point and control system activates boiler start. _____

d. Shut off building heating equipment to remove load on hot water system. Verify boiler shutdown sequence is initiated and accomplished after load is removed. _____

2. Verify boiler inlet/outlet pressure reading, compare to Test and Balance (TAB) Report, boiler design conditions, and boiler manufacturer's performance data.

	DESIGN	TAB	ACTUAL
Boiler inlet pressure (psig)	_____	_____	_____
Boiler outlet pressure (psig)	_____	_____	_____
Boiler flow rate (gpm)	_____	_____	_____
Flue-gas temperature at boiler outlet	_____	_____	
Percent carbon dioxide in flue-gas	_____	_____	
Draft at boiler flue-gas exit	_____	_____	
Draft or pressure in furnace	_____	_____	
Stack emission pollutants concentration	_____	_____	_____
Fuel type	_____	_____	_____
Combustion efficiency	_____	_____	_____

3. Record the following information:

Ambient temperature	_____	degrees F
Entering hot water temperature	_____	degrees F
Leaving hot water temperature	_____	degrees F

4. Verify temperatures in item 3 are in accordance with the reset schedule. _____

5. Verify proper operation of boiler safeties. _____

6. Unusual vibration, noise, etc.

_____

_____

7. Visually check refractory for cracks or spalling and refractory and

Functional Performance Test Checklist - Hot Water Boiler

For Boiler: _____

tubes for flame impingement. _____

8. Certification: We the undersigned have witnessed the above functional performance tests and certify that the item tested has met the performance requirements in this section of the specifications.

Signature and Date

Contractor's Chief Quality Control Representative
_____

Contractor's Mechanical Representative
_____

Contractor's Electrical Representative
_____

Contractor's Testing, Adjusting and Balancing
_____
Representative

Contractor's Controls Representative
_____

Contracting Officer's Representative
_____

Using Agency's Representative
_____

Functional Performance Test Checklist - Fan Coil Units

The Contracting Officer will select fan coil units to be spot-checked during the functional performance test. The number of terminals shall not exceed 10 percent.

1. Functional Performance Test: Contractor shall demonstrate operation of selected fan coils as per specifications including the following:

a. Cooling only fan coils:

(1) Verify fan coil unit response to room temperature set point adjustment. Changes to be cooling set point to cooling set point minus 10 degrees and return to cooling set point. _____

(2) Check blower fan air flow. _____ cfm

(3) Check cooling coil water flow. _____ gpm

(4) Verify proper operation of cooling water control valve. _____

b. Cooling/heating fan coils:

(1) Verify fan coil unit response to room temperature set point adjustment. Changes to be cooling set point to heating set point and return to cooling set point. _____

(2) Check blower fan air flow. _____ cfm

(3) Check cooling ciol water flow. _____ cfm

(4) Verify proper operation of cooling water control valve. _____

(5) Check cooling mode inlet air temperature. _____ degrees F

(6) Check cooling mode outlet air temperature. _____ degrees F

(7) Check heating coil water flow. _____ gpm

(8) Verify proper operation of heating water control valve. _____

(9) Check heating mode inlet air temperature. _____ degrees F

(10) Check heating mode outlet air temperature.
Check heating mode outlet air temperature. _____ degrees F

2. Certification: We the undersigned have witnessed the above functional performance tests and certify that the item tested has met the performance requirements in this section of the specifications.

Signature and Date

Contractor's Chief Quality Control Representative

_____

Contractor's Mechanical Representative

_____

Functional Performance Test Checklist - Fan Coil Units

Contractor's Electrical Representative
_____

Contractor's Testing, Adjusting and Balancing
_____
Representative

Contractor's Controls Representative
_____

Contracting Officer's Representative
_____

Using Agency's Representative
_____

Functional Performance Test Checklist - Unit Heaters

The Contracting Officer will select unit heaters to be spot-checked during the functional performance test. The number of terminals shall not exceed 2 10 10 percent.

1. Functional Performance Test: Contractor shall demonstrate operation of selected unit heaters as per specifications including the following:

a. Verify unit heater response to room temperature set point adjustment. Changes to be heating set point to heating set point minus 10 degrees and return to heating set point. _____

b. Check blower fan speed. _____rpm

c. Check heating mode inlet air temperature. _____ degrees F

d. Check heating mode outlet air temperature. _____ degrees F

2. Certification: We the undersigned have witnessed the above functional performance tests and certify that the item tested has met the performance requirements in this section of the specifications.

Signature and Date

Contractor's Chief Quality Control Representative
_____

Contractor's Mechanical Representative
_____

Contractor's Electrical Representative
_____

Contractor's Testing, Adjusting and Balancing
_____
Representative

Contractor's Controls Representative
_____

Contracting Officer's Representative
_____

Using Agency's Representative
_____

Functional Performance Test Checklist - HVAC Controls

For HVAC System: _____

The Contracting Officer will select HVAC control systems to undergo functional performance testing. The number of systems shall not exceed 2 10 10 percent.

1. Functional Performance Test: Contractor shall verify operation of HVAC controls by performing the following tests:

a. Verify that controller is maintaining the set point by manually measuring the controlled variable with a thermometer, sling psychrometer, inclined manometer, etc.

b. Verify sensor/controller combination by manually measuring the controlled medium. Take readings from control panel display and compare readings taken manually. Record all readings.

Sensor _____
Manual measurement _____
Panel reading value _____

c. Verify system stability by changing the controller set point as follows:

(1) Air temperature - 10 degrees F

(2) Water temperature - 10 degrees F

(3) Static pressure - 10 percent of set point

The control system shall be observed for 10 minutes after the change in set point. Instability or excessive hunting will be unacceptable.

d. Verify interlock with other HVAC controls.

e. Verify interlock with fire alarm control panel.

f. Verify interlock with EMCS.

2. Verify that operation of control system conforms to that specified in the sequence of operation.

3. Certification: We the undersigned have witnessed the above functional performance tests and certify that the item tested has met the performance requirements in this section of the specifications.

Signature and Date

Contractor's Chief Quality Control Representative

_____

Contractor's Mechanical Representative

_____

Contractor's Electrical Representative

Functional Performance Test Checklist - HVAC Controls

For HVAC System: _____

_____

Contractor's Testing, Adjusting and Balancing

_____

Representative

Contractor's Controls Representative

_____

Contractor's Officer's Representative

_____

Using Agency's Representative

_____

-- End of Section --

SECTION TABLE OF CONTENTS

DIVISION 16 - ELECTRICAL

SECTION 16375

ELECTRICAL DISTRIBUTION SYSTEM, UNDERGROUND

11/92

PART 1 GENERAL

1.1 REFERENCES
1.2 GENERAL REQUIREMENTS
1.2.1 Terminology
1.2.2 Service Conditions
1.3 SUBMITTALS
1.4 DELIVERY, STORAGE, AND HANDLING
1.5 EXTRA MATERIALS

PART 2 PRODUCTS

2.1 STANDARD PRODUCT
2.2 NAMEPLATES
2.2.1 General
2.2.2 Liquid-Filled Transformer Nameplates
2.3 CORROSION PROTECTION
2.3.1 Aluminum Materials
2.3.2 Ferrous Metal Materials
2.3.2.1 Hardware
2.3.2.2 Equipment
2.3.3 Finishing
2.4 CABLES
2.4.1 Conductor Material
2.4.2 Medium-Voltage Cables
2.4.2.1 General
2.4.2.2 Insulation
2.4.2.3 Jackets
2.4.2.4 Neutrals
2.4.2.5 Shielding
2.4.2.6 Ratings
2.4.3 Low-Voltage Cables
2.4.3.1 In Duct
2.5 CABLE JOINTS, TERMINATIONS, AND CONNECTORS
2.5.1 Medium-Voltage Separable Insulated Connectors
2.5.2 Terminations
2.5.2.1 Factory Preformed Type
2.6 CONDUIT AND DUCTS
2.6.1 Metallic Conduit
2.6.2 Nonmetallic Ducts
2.6.2.1 Concrete Encased Ducts
2.6.3 Conduit Sealing Compound
2.7 MANHOLES
2.8 TRANSFORMERS
2.8.1 Pad-Mounted Transformers
2.8.1.1 High-Voltage Compartments

2.8.1.2 Transformer Tank Sections
2.8.1.3 Low-Voltage Cable Compartments
2.9 METERING AND PROTECTIVE DEVICES
2.9.1 Fuses, Medium-Voltage, Including Current-Limiting
2.9.2 Instrument Transformers
2.9.3 Digital Power Monitor (PM)
2.10 SURGE ARRESTERS
2.11 GROUNDING AND BONDING
2.11.1 Driven Ground Rods
2.11.2 Grounding Conductors
2.12 CONCRETE AND REINFORCEMENT
2.13 PADLOCKS
2.14 CABLE FIREPROOFING SYSTEMS
2.14.1 Fireproof Coating
2.14.2 Fireproofing Tape
2.14.3 Plastic Tape
2.15 LIQUID DIELECTRICS
2.16 FACTORY TESTS

PART 3 EXECUTION

3.1 GENERAL INSTALLATION REQUIREMENTS
3.1.1 Conformance to Codes
3.1.2 Verification of Dimensions
3.1.3 Disposal of Liquid Dielectrics
3.2 CABLE INSTALLATION
3.2.1 Cable Installation Plan and Procedure
3.2.1.1 Cable Inspection
3.2.1.2 Duct Cleaning
3.2.1.3 Duct Lubrication
3.2.1.4 Cable Installation
3.2.1.5 Cable Installation Plan
3.2.2 Duct Line
3.3 DUCT LINES
3.3.1 Requirements
3.3.2 Treatment
3.3.3 Concrete Encasement
3.3.4 Installation of Couplings
3.3.4.1 Plastic Duct
3.3.5 Duct Line Markers
3.4 MANHOLES, HANDHOLES, AND PULLBOXES
3.4.1 General
3.4.2 Communications Manholes
3.4.3 Ground Rods
3.5 PAD-MOUNTED EQUIPMENT INSTALLATION
3.5.1 Concrete Pads
3.5.1.1 Construction
3.5.1.2 Concrete and Reinforcement
3.5.1.3 Sealing
3.5.2 Padlocks
3.6 CONNECTIONS TO BUILDINGS
3.7 GROUNDING
3.7.1 Grounding Electrodes
3.7.2 Grounding and Bonding Connections
3.7.3 Grounding and Bonding Conductors
3.7.4 Surge Arrester Grounding
3.7.5 Manhole, Handhole, or Concrete Pullbox Grounding
3.8 FIELD TESTING
3.8.1 General

3.8.2 Safety
3.8.3 Ground-Resistance Tests
3.8.4 Medium-Voltage Cable Test
3.8.5 Low-Voltage Cable Test
3.8.6 Liquid-Filled Transformer Tests
3.8.7 Pre-Energization Services
3.8.8 Operating Tests
3.9 ACCEPTANCE
3.10 DIGITAL POWER MONITOR (PM)
3.10.1 Inputs from Industry Standard Instrument Transformers
3.10.2 Reset of the Electrical parameters
3.10.3 Input Ranges:
3.10.4 Reset and Setup Functions
3.10.5 Power Monitor
3.10.6 Waveform Capture Capability
3.10.7 Interface to Computer Network
3.10.8 Start-up and Training

-- End of Section Table of Contents --

SECTION 16375

ELECTRICAL DISTRIBUTION SYSTEM, UNDERGROUND
11/92

PART 1 GENERAL

1.1 REFERENCES

The publications listed below form a part of this specification to the extent referenced. The publications are referred to in the text by basic designation only.

AMERICAN NATIONAL STANDARDS INSTITUTE (ANSI)

ANSI C2	(1993) National Electrical Safety Code
ANSI C12.1	(1988) Code for Electricity Metering
ANSI C12.11	(1987) Instrument Transformers for Revenue Metering, 10 kV BIL through 350 kV (0.6 kV NSV through 69 kV NSV)
ANSI C29.1	(1988) Electrical Power Insulators - Test Methods
ANSI C57.12.21	(1980) Requirements for Pad-Mounted Compartmental-Type, Self-Cooled, Single-Phase Distribution Transformers with High-Voltage Bushings; High-Voltage, 34 500 GrdY/19 920 Volts and Below; Low-Voltage, 240/120 Volts; 167 kVA and Smaller
ANSI C57.12.26	(1993) Pad-Mounted Compartmental-Type, Self-Cooled, Three-Phase Distribution Transformers for use with Separable Insulated High-Voltage Connectors, High-Voltage, 34 500 GrdY/19 920 Volts and Below; 2500 kVa and Smaller
ANSI C80.1	(1990) Rigid Steel Conduit - Zinc Coated
ANSI O5.1	(1992) Specifications and Dimensions for Wood Poles

AMERICAN SOCIETY FOR TESTING AND MATERIALS (ASTM)

ASTM A 48	(1994a) Gray Iron Castings
ASTM A 123	(1989a) Zinc (Hot-Dip Galvanized) Coatings on Iron and Steel Products
ASTM A 153	(1982; R 1987) Zinc Coating (Hot-Dip) on Iron and Steel Hardware

ASTM B 8	(1993) Concentric-Lay-Stranded Copper Conductors, Hard, Medium-Hard, or Soft
ASTM B 117	(1994) Operating Salt Spray (Fog) Testing Apparatus
ASTM C 478	(1994) Precast Reinforced Concrete Manhole Sections
ASTM D 923	(1991) Sampling Electrical Insulating Liquids
ASTM D 1654	(1992) Evaluation of Painted or Coated Specimens Subjected to Corrosive Environments
ASTM D 4059	(1991) Analysis of Polychlorinated Biphenyls in Insulating Liquids by Gas Chromatography
ASTM F 883	(1990) Padlocks

FACTORY MUTUAL ENGINEERING AND RESEARCH (FM)

FM P7825	(199; Supple I) Approval Guide

FEDERAL SPECIFICATIONS (FS)

FS HH-I-595	(Rev C) Insulation Tape, Electrical, Pressure-Sensitive Adhesive, Plastic
FS RR-F-621	(Rev E) Frames, Covers, Gratings, Steps, Sump and Catch Basin, Manhole

INSTITUTE OF ELECTRICAL AND ELECTRONICS ENGINEERS (IEEE)

IEEE C57.12.00	(1993) IEEE Standard General Requirements for Liquid-Immersed Distribution, Power, and Regulating Transformers
IEEE C62.1	(1989; R 1994) Surge Arresters for ac Power Circuits
IEEE C62.2	(1987; R 1994) Guide for the Application of Gapped Silicon-Carbide Surge Arresters for Alternating Current Systems
IEEE C62.11	(1993) IEEE Standard Metal-Oxide Surge Arresters for AC Power Circuits
IEEE Std 48	(1990) Standard Test Procedures and Requirements for High-Voltage Alternating-Current Cable Terminations
IEEE Std 81	(1983) Guide for Measuring Earth Resistivity, Ground Impedance, and Earth Surface Potentials of a Ground System (Part 1)

IEEE Std 100	(1992) IEEE Standard Dictionary of Electrical and Electronics Terms
IEEE Std 386	(1995) Separable Insulated Connector Systems for Power Distribution Systems Above 600 V
IEEE Std 404	(1993) Cable Joints for Use with Extruded Dielectric Cable Rated 5000 V through 46 000 V and Cable Joints for Use with Laminated Dielectric Cable Rated 2500 V Through 500 000 V
IEEE Std 592	(1990) Exposed Semiconducting Shields on Premolded High Voltage Cable Joints and Separable Insulated Connectors

NATIONAL ELECTRICAL MANUFACTURERS ASSOCIATION (NEMA)

NEMA FB 1	(1993) Fittings, Cast Metal Boxes and Conduit Bodies for Conduit and Cable Assemblies
NEMA LA 1	(1992) Surge Arresters
NEMA SG 2	(1993) High Voltage Fuses
NEMA TC 6	(1990) PVC and ABS Plastic Utilities Duct for Underground Installation
NEMA WC 7	(1993) Cross-Linked-Thermosetting-Polyethylene-Insulated Wire and Cable for the Transmission and Distribution of Electrical Energy
NEMA WC 8	(1993) Ethylene-Propylene-Rubber-Insulated Wire and Cable for the Transmission and Distribution of Electrical Energy

NATIONAL FIRE PROTECTION ASSOCIATION (NFPA)

NFPA 70	(1996) National Electrical Code

UNDERWRITERS LABORATORIES (UL)

UL 6	(1993) Rigid Metal Conduit
UL 467	(1993) Grounding and Bonding Equipment
UL 514A	(1991; Rev Apr 1995) Metallic Outlet Boxes
UL 651	(1989; Rev thru Dec 1989) Schedule 40 and 80 Rigid PVC Conduit
UL 1242	(1983; Rev thru Jul 1993) Intermediate Metal Conduit

1.2 GENERAL REQUIREMENTS

1.2.1 Terminology

Terminology used in this specification is as defined in IEEE Std 100.

1.2.2 Service Conditions

Items provided under this section shall be specifically suitable for the following service conditions:

a. Altitude 4785 feet

b. Ambient Temperature 94 degrees F

c. Frequency 60 Hz.

d. Seismic Zone 3.

1.3 SUBMITTALS

Governmental approval is required for submittals with a "GA" designation; submittals having an "FIO" designation are for information only. The following shall be submitted in accordance with Section 01300 SUBMITTAL PROCEDURES:

SD-01 Data

Manufacturer's Catalog Data; FIO.

Catalog cuts, brochures, circulars, specifications, product data, and printed information in sufficient detail and scope to verify compliance with the requirements of the contract documents.

Material, Equipment, and Fixture Lists; FIO.

A complete itemized listing of equipment and materials proposed for incorporation into the work. Each entry shall include an item number, the quantity of items proposed, and the name of the manufacturer of each such item.

Installation Procedures; FIO.

As a minimum, installation procedures for transformers, substations, switchgear, and medium-voltage cable terminations and splices.

Procedures shall include cable pulling plans, diagrams, instructions, and precautions required to install, adjust, calibrate, and test the devices and equipment.

SD-04 Drawings

Electrical Distribution System; FIO.

Detail drawings consisting of equipment drawings, illustrations, schedules, instructions, diagrams manufacturers standard installation drawings and other information necessary to define the installation and enable the Government to check conformity with the requirements of the contract drawings.

If departures from the contract drawings are deemed necessary by the Contractor, complete details of such departures shall be included with the detail drawings. Approved departures shall be made at no additional cost to the Government.

Detail drawings shall show how components are assembled, function together and how they will be installed on the project. Data and drawings for component parts of an item or system shall be coordinated and submitted as a unit. Data and drawings shall be coordinated and included in a single submission. Multiple submissions for the same equipment or system are not acceptable except where prior approval has been obtained from the Contracting Officer. In such cases, a list of data to be submitted later shall be included with the first submission. Detail drawings shall consist of the following:

a. Detail drawings showing physical arrangement, construction details, connections, finishes, materials used in fabrication, provisions for conduit or busway entrance, access requirements for installation and maintenance, physical size, electrical characteristics, foundation and support details, and equipment weight. Drawings shall be drawn to scale and/or dimensioned. All optional items shall be clearly identified as included or excluded.

b. Internal wiring diagrams of equipment showing wiring as actually provided for this project. External wiring connections shall be clearly identified.

Detail drawings shall as a minimum depict the installation of the following items:

a. Medium-voltage cables and accessories including cable installation plan.

b. Transformers.

c. Surge arresters.

As-Built Drawings; FIO.

The as-built drawings shall be a record of the construction as installed. The drawings shall include the information shown on the contract drawings as well as deviations, modifications, and changes from the contract drawings, however minor. The as-built drawings shall be a full sized set of prints marked to reflect deviations, modifications, and changes. The as-built drawings shall be complete and show the location, size, dimensions, part identification, and other information. Additional sheets may be added. The as-built drawings shall be jointly inspected for accuracy and completeness by the Contractor's quality control representative and by the Contracting Officer prior to the submission of each monthly pay estimate. Upon completion of the work, the Contractor shall provide three full sized sets of the marked prints to the Contracting Officer for approval. If upon review, the as-built drawings are found to contain errors and/or omissions, they will be returned to the Contractor for correction. The Contractor shall correct and return the as-built drawings to the Contracting Officer for approval within 10 calendar days from the time the drawings are returned to the Contractor.

SD-09 Reports

Factory Test; FIO.

Certified factory test reports shall be submitted when the manufacturer performs routine factory tests, including tests required by standards listed in paragraph REFERENCES. Results of factory tests performed shall be certified by the manufacturer, or an approved testing laboratory, and submitted within 7 days following successful completion of the tests. The manufacturer's pass-fail criteria for tests specified in paragraph FIELD TESTING shall be included.

Field Testing; FIO.

A proposed field test plan, 20 days prior to testing the installed system. No field test shall be performed until the test plan is approved. The test plan shall consist of complete field test procedures including tests to be performed, test equipment required, and tolerance limits.

Test Reports; FIO.

Six copies of the information described below in 8-1/2 by 11 inch binders having a minimum of three rings, including a separate section for each test. Sections shall be separated by heavy plastic dividers with tabs.

a. A list of equipment used, with calibration certifications.

b. A copy of measurements taken.

c. The dates of testing.

d. The equipment and values to be verified.

e. The condition specified for the test.

f. The test results, signed and dated.

g. A description of adjustments made.

Cable Installation Reports; FIO.

Six copies of the information described below in 8-1/2 by 11 inch binders having a minimum of three rings from which material may readily be removed and replaced, including a separate section for each cable pull. Sections shall be separated by heavy plastic dividers with tabs, with all data sheets signed and dated by the person supervising the pull.

a. Site layout drawing with cable pulls numerically identified.

b. A list of equipment used, with calibration certifications. The manufacturer and quantity of lubricant used on pull.

c. The cable manufacturer and type of cable.

d. The dates of cable pulls, time of day, and ambient temperature.

e. The length of cable pull and calculated cable pulling tensions.

f. The actual cable pulling tensions encountered during pull.

SD-13 Certificates

Materials and Equipment; FIO.

Where materials or equipment are specified to conform to the standards of the Underwriters Laboratories (UL) or to be constructed or tested, or both, in accordance with the standards of the American National Standards Institute (ANSI), the Institute of Electrical and Electronics Engineers (IEEE), or the National Electrical Manufacturers Association (NEMA), the Contractor shall submit proof that the items provided conform to such requirements. The label of, or listing by, UL will be acceptable as evidence that the items conform. Either a certification or a published catalog specification data statement, to the effect that the item is in accordance with the referenced ANSI or IEEE standard, will be acceptable as evidence that the item conforms. A similar certification or published catalog specification data statement to the effect that the item is in accordance with the referenced NEMA standard, by a company listed as a member company of NEMA, will be acceptable as evidence that the item conforms. In lieu of such certification or published data, the Contractor may submit a certificate from a recognized testing agency equipped and competent to perform such services, stating that the items have been tested and that they conform to the requirements listed, including methods of testing of the specified agencies. Compliance with above-named requirements does not relieve the Contractor from compliance with any other requirements of the specifications.

Cable Splicer Qualification; FIO.

A certification that contains the names and the qualifications of people recommended to perform the splicing and termination of medium-voltage cables approved for installation under this contract. The certification shall indicate that any person recommended to perform actual splicing and terminations has been adequately trained in the proper techniques and have had at least three recent years of experience in splicing and terminating the same or similar types of cables approved for installation. In addition, any person recommended by the Contractor may be required to perform a practice splice and termination, in the presence of the Contracting Officer, before being approved as a qualified installer of medium-voltage cables. If that additional requirement is imposed, the Contractor shall provide short sections of the approved types of cables along with the approved type of splice and termination kits, and detailed manufacturer's instruction for the proper splicing and termination of the approved cable types.

SD-19 Operation and Maintenance Manuals

Electrical Distribution System; GA.

Six copies of Operation and Maintenance manuals, within 7 calendar days following the completion of tests and including assembly, installation, operation and maintenance instructions, spare parts data which provides supplier name, current cost, catalog order number, and a recommended list of spare parts to be stocked. Manuals shall also include data outlining detailed procedures for system startup and operation, and a troubleshooting guide which lists possible operational problems and corrective action to be taken. A brief description of all equipment, basic operating features, and routine maintenance requirements shall also be included. Documents shall be bound in a binder marked or identified on the spine and front cover. A table of contents page shall be included and marked with pertinent contract

information and contents of the manual. Tabs shall be provided to separate different types of documents, such as catalog ordering information, drawings, instructions, and spare parts data. Index sheets shall be provided for each section of the manual when warranted by the quantity of documents included under separate tabs or dividers.

Three additional copies of the instructions manual, within 30 calendar days following the approval of the manuals.

1.4 DELIVERY, STORAGE, AND HANDLING

Devices and equipment shall be visually inspected by the Contractor when received and prior to acceptance from conveyance. Stored items shall be protected from the environment in accordance with the manufacturer's published instructions. Damaged items shall be replaced. Oil filled transformers and switches shall be stored in accordance with the manufacturer's requirements. Wood poles held in storage for more than 2 weeks shall be stored in accordance with ANSI O5.1. Handling of wood poles shall be in accordance with ANSI O5.1, except that pointed tools capable of producing indentations more than 1 inch in depth shall not be used. Metal poles shall be handled and stored in accordance with the manufacturer's instructions.

1.5 EXTRA MATERIALS

One additional spare fuse or fuse element for each furnished fuse or fuse element shall be delivered to the contracting officer when the electrical system is accepted. Two complete sets of all special tools required for maintenance shall be provided, complete with a suitable tool box. Special tools are those that only the manufacturer provides, for special purposes (to access compartments, or operate, adjust, or maintain special parts).

PART 2 PRODUCTS

2.1 STANDARD PRODUCT

Material and equipment shall be the standard product of a manufacturer regularly engaged in the manufacture of the product and shall essentially duplicate items that have been in satisfactory use for at least 2 years prior to bid opening. Items of the same classification shall be identical including equipment, assemblies, parts, and components.

2.2 NAMEPLATES

2.2.1 General

Each major component of this specification shall have the manufacturer's name, address, type or style, model or serial number, and catalog number on a nameplate securely attached to the equipment. Nameplates shall be made of noncorrosive metal. Equipment containing liquid dielectrics shall have the type of dielectric on the nameplate. Sectionalizer switch nameplates shall have a schematic with all switch positions shown and labeled. As a minimum, nameplates shall be provided for transformers, circuit breakers, meters, switches, and switchgear.

2.2.2 Liquid-Filled Transformer Nameplates

Nameplates shall indicate percent impedance, voltage, kVA, frequency, number of phases, cooling class, insulation class, temperature rise, the

number of gallons and composition of liquid-dielectric, and shall be permanently marked with a statement that the dielectric supplied is non-polychlorinated biphenyl. If transformer nameplate is not so marked, the Contractor shall furnish manufacturer's certification for each transformer that the dielectric is non-PCB classified, with less than 50 ppm PCB content in accordance with paragraph LIQUID DIELECTRICS. Certifications shall be related to serial numbers on transformer nameplates. Transformer dielectric exceeding the 50 ppm PCB content or transformers without certification will be considered as PCB insulated and will not be accepted.

2.3 CORROSION PROTECTION

2.3.1 Aluminum Materials

Aluminum shall not be used.

2.3.2 Ferrous Metal Materials

2.3.2.1 Hardware

Ferrous metal hardware shall be hot-dip galvanized in accordance with ASTM A 153 and ASTM A 123.

2.3.2.2 Equipment

Equipment and component items, including but not limited to transformer stations and ferrous metal luminaries not hot-dip galvanized or porcelain enamel finished, shall be provided with corrosion-resistant finishes which shall withstand 120 hours of exposure to the salt spray test specified in ASTM B 117 without loss of paint or release of adhesion of the paint primer coat to the metal surface in excess of 1/16 inch from the test mark. The scribed test mark and test evaluation shall be in accordance with ASTM D 1654 with a rating of not less than 7 in accordance with TABLE 1, (procedure A). Cut edges or otherwise damaged surfaces of hot-dip galvanized sheet steel or mill galvanized sheet steel shall be coated with a zinc rich paint conforming to the manufacturer's standard.

2.3.3 Finishing

Painting required for surfaces not otherwise specified and finish painting of items only primed at the factory shall be as specified in Section 09900 PAINTING, GENERAL.

2.4 CABLES

Cables shall be single conductor type unless otherwise indicated.

2.4.1 Conductor Material

Underground cables shall be of soft drawn copper conductor material.

2.4.2 Medium-Voltage Cables

2.4.2.1 General

Medium voltage cables shall conform to the requirements of NEMA WC 8 for cables utilizing ethylene-propylene-rubber (EPR) insulation. Cables shall be in accordance with the requirements of NFPA 70.

2.4.2.2 Insulation

Cables shall utilize ethylene-propylene-rubber (EPR) insulation. Cables shall be provided with 133 percent insulation level.

2.4.2.3 Jackets

Cables shall be provided with a nonmetallic jacket.

2.4.2.4 Neutrals

Neutral conductors of grounded neutral systems except for concentric neutral cables shall be of the same insulation material as phase conductors, except that a 600-volt insulation rating is acceptable.

2.4.2.5 Shielding

Cables rated for above 2 kV shall have both conductor and insulation shielding for each phase.

2.4.2.6 Ratings

Medium-voltage cables shall be rated for a circuit voltage of 15 kV.

2.4.3 Low-Voltage Cables

Cables shall be rated 600 volts and shall conform to the requirements of NFPA 70. Cables shall utilize cross-linked thermosetting polyethylene (XLP) insulation and shall conform to the requirements of NEMA WC 7.

2.4.3.1 In Duct

Cables shall be single-conductor cable, Type RHW, THW, THWN, TW, USE, or XHHW in accordance with NFPA 70.

2.5 CABLE JOINTS, TERMINATIONS, AND CONNECTORS

2.5.1 Medium-Voltage Separable Insulated Connectors

Separable insulated connectors shall comply with IEEE Std 386 and IEEE Std 592 and shall be of suitable construction or standard splice kits shall be used. Separable insulated connectors are acceptable for voltages up to 35 kV. Connectors shall be of the loadbreak type as indicated, of suitable construction for the application and the type of cable connected, and shall include cable shield adaptors. Separable insulated connectors shall not be used as substitutes for conventional permanent splices. External clamping points and test points shall be provided.

2.5.2 Terminations

Terminations shall be in accordance with IEEE Std 48, Class 1 or Class 2; of the molded elastomer, wet-process porcelain, prestretched elastomer, heat-shrinkable elastomer, or taped type. Acceptable elastomers are track-resistant silicone rubber or track-resistant ethylene propylene compounds, such as ethylene propylene rubber or ethylene propylene diene monomer. Separable insulated connectors may be used for apparatus terminations, when such apparatus is provided with suitable bushings. Terminations shall be of the outdoor type, except that where installed

inside outdoor equipment housings which are sealed against normal infiltration of moisture and outside air, indoor, Class 2 terminations are acceptable. Class 3 terminations are not acceptable. Terminations, where required, shall be provided with mounting brackets suitable for the intended installation and with grounding provisions for the cable shielding, metallic sheath, and armor.

2.5.2.1 Factory Preformed Type

Molded elastomer, wet-process porcelain, prestretched, and heat-shrinkable terminations shall utilize factory preformed components to the maximum extent practicable rather than tape build-up. Terminations shall have basic impulse levels as required for the system voltage level. Leakage distances shall comply with wet withstand voltage test requirements of IEEE Std 48 for the next higher Basic Insulation Level (BIL) level.

2.6 CONDUIT AND DUCTS

Duct lines shall be concrete-encased, thin-wall type.

2.6.1 Metallic Conduit

Intermediate metal conduit shall comply with UL 1242. Rigid galvanized steel conduit shall comply with UL 6 and ANSI C80.1. Metallic conduit fittings and outlets shall comply with UL 514A and NEMA FB 1.

2.6.2 Nonmetallic Ducts

2.6.2.1 Concrete Encased Ducts

UL 651 Schedule 40 or NEMA TC 6 Type EB.

2.6.3 Conduit Sealing Compound

Compounds for sealing ducts and conduit shall have a putty-like consistency workable with the hands at temperatures as low as 35 degrees F, shall neither slump at a temperature of 300 degrees F, nor harden materially when exposed to the air. Compounds shall adhere to clean surfaces of fiber or plastic ducts; metallic conduits or conduit coatings; concrete, masonry, or lead; any cable sheaths, jackets, covers, or insulation materials; and the common metals. Compounds shall form a seal without dissolving, noticeably changing characteristics, or removing any of the ingredients. Compounds shall have no injurious effect upon the hands of workmen or upon materials.

2.7 MANHOLES

Manholes shall be as indicated. Precast-concrete manholes shall have the required strength established by ASTM C 478. Frames and covers shall be made of gray cast iron and a machine-finished seat shall be provided to ensure a matching joint between frame and cover. In paved areas, frames and covers in vehicular traffic areas shall be rated for wheel loads in accordance with FS RR-F-621. Cast iron shall comply with ASTM A 48, Class 30B, minimum.

2.8 TRANSFORMERS

Transformers shall be of the outdoor type having the ratings and arrangements indicated. Medium-voltage ratings of cable terminations shall

be 15 kV between phases for 133 percent insulation level.

2.8.1 Pad-Mounted Transformers

Pad-mounted transformers shall comply with ANSI C57.12.26 and shall be of the radial feed type. Pad-mounted transformer stations shall be assembled and coordinated by one manufacturer and each transformer station shall be shipped as a complete unit so that field installation requirements are limited to mounting each unit on a concrete pad and connecting it to primary and secondary lines. Stainless steel pins and hinges shall be provided. Barriers shall be provided between high- and low-voltage compartments. High-voltage compartment doors shall be interlocked with low-voltage compartment doors to prevent access to any high-voltage section unless its associated low-voltage section door has first been opened. Compartments shall be sized to meet the specific dimensional requirements of ANSI C57.12.26. Pentahead locking bolts shall be provided with provisions for a padlock.

2.8.1.1 High-Voltage Compartments

High-voltage compartments shall be dead-front construction. Primary protection shall include loadbreak switching, drawout dry-well-mounted current-limiting fuses, and medium-voltage separable connectors, and surge arresters. Switches shall be of the group-operated type. Switches may be mounted inside transformer tanks with switch operating handles located in high-voltage compartments and equipped with metal loops for hook stick operation. Fuses shall be interlocked with switches so that fuses can be removed only when the associated switch is in the "OFF" position. Adjacent to medium-voltage cable connections, a nameplate or equivalent stencilled inscription shall be provided inscribed "DO NOT OPEN CABLE CONNECTORS UNLESS SWITCH IS OFF." Adjacent to switches, nameplates shall identify switch operating handles and "ON" and "OFF" positions. Surge arresters shall be fully insulated and configured to terminate on the same bushing as the primary cable by means of a loadbreak, feed-through bushing insert.

2.8.1.2 Transformer Tank Sections

Transformers shall comply with IEEE C57.12.00, ANSI C57.12.21, and ANSI C57.12.26 and shall be of the mineral oil-insulated type less-flammable, liquid-insulated type with high molecular-weight hydrocarbon liquid. Transformers shall be suitable for outdoor use and shall have 2 separate windings per phase. Standard NEMA primary taps shall be provided. Where primary taps are not specified, 4, 2-1/2 percent rated kVA high-voltage taps shall be provided 2 above and 2 below rated, primary voltage. Operating handles for primary tap changers for de-energized operation shall be located within high-voltage compartments, externally to transformer tanks. Adjacent to the tap changer operating handle, a nameplate or equivalent stenciled inscription shall be provided and inscribed "DO NOT OPERATE UNDER LOAD." Transformer ratings at 60 Hz shall be as follows:

Three-phase capacity.....150 kVA
Impedance.....5.75
Temperature rise.....65 degrees C
High-voltage winding.....12,470 volts
High-voltage winding connections.....Delta
Low-voltage winding.....480/277 volts
Low-voltage winding connections.....Wye

2.8.1.3 Low-Voltage Cable Compartments

Neutrals shall be provided with fully-insulated bushings. Clamp type cable terminations, suitable for copper conductors entering from below, shall be provided as necessary.

2.9 METERING AND PROTECTIVE DEVICES

2.9.1 Fuses, Medium-Voltage, Including Current-Limiting

Medium-voltage fuses, including current-limiting, shall comply with NEMA SG 2.

2.9.2 Instrument Transformers

Instrument transformers shall comply with ANSI C12.11 for 0.6 kV insulation class with a primary rating suitable for the rated voltage and current of the secondary main bus of the transformer station on which the instrument transformer is installed.

2.9.3 Digital Power Monitor (PM)

Digital power monitors shall meet the accuracy as specified in ANSI C12.1 and ANSI C12.16. Digital power monitors shall be a microprocessor based monitoring and protective device that provides complete electrical metering values such as frequency, temperature, current, voltage, power factor, watts, vars, watt demand and watt hours. The PM shall also be capable of capturing current and voltage waveforms which may be exported to a personal computer where waveform or other power quality analysis may be preformed. The PM shall incorporate electronic pulse initiation. The PM shall be UL listed and shall pass the surge withstand and fast transient tests per IEC pub 801-5 Level 4.

2.10 SURGE ARRESTERS

Surge arresters shall comply with NEMA LA 1, IEEE C62.1, IEEE C62.2, and IEEE C62.11 and shall be provided where indicated. Arresters shall be intermediate class, rated as shown. Arresters for use at elevations in excess of 6000 feet above mean sea level shall be specifically rated for that purpose. Arresters shall be equipped with mounting brackets suitable for the indicated installations. Arresters shall be of the metal-oxide varistor type.

2.11 GROUNDING AND BONDING

2.11.1 Driven Ground Rods

Ground rods shall be copper-clad steel conforming to UL 467 not less than 3/4 inch in diameter by 10 feet in length. Sectional type rods may be used.

2.11.2 Grounding Conductors

Grounding conductors shall be bare, except where installed in conduit with associated phase conductors. Insulated conductors shall be of the same material as phase conductors and green color-coded, except that conductors shall be rated no more than 600 volts. Bare conductors shall be ASTM B 8 soft-drawn unless otherwise indicated. Aluminum is not acceptable.

2.12 CONCRETE AND REINFORCEMENT

Concrete shall be a minimum of 2500 psi at 28 days. All other requirements shall be as specified in Section 03300 CAST-IN-PLACE STRUCTURAL CONCRETE. Concrete reinforcing shall be as specified in Section 03200 CONCRETE REINFORCEMENT.

2.13 PADLOCKS

Padlocks shall conform to ASTM F 883, Type EPC, size 2.

2.14 CABLE FIREPROOFING SYSTEMS

Cable fireproofing systems shall be listed in FM P7825 as a fire-protective coating or tape approved for grouped electrical conductors and shall be suitable for application on the type of medium-voltage cables provided. After being fully cured, materials shall be suitable for use where exposed to oil, water, gases, salt water, sewage, and fungus and shall not damage cable jackets or insulation. Asbestos materials are not acceptable.

2.14.1 Fireproof Coating

Cable fireproofing coatings shall be compounded of water-based thermoplastic resins, flame-retardant chemicals, and inorganic noncombustible fibers and shall be suitable for the application methods used. Coatings applied on bundled cables shall have a derating factor of less than 5 percent, and a dielectric strength of 95 volts per mil minimum after curing.

2.14.2 Fireproofing Tape

Fireproofing tape shall be at least 2 inches wide and shall be a flexible, conformable, polymeric, elastomer tape designed specifically for fireproofing cables.

2.14.3 Plastic Tape

Pre-application plastic tape shall be pressure sensitive, 10 mil thick, conforming to FS HH-I-595.

2.15 LIQUID DIELECTRICS

Liquid dielectrics for transformers and other liquid-filled electrical equipment shall be non-polychlorinated biphenyl (PCB) mineral-oil or less-flammable liquid as specified. Nonflammable fluids shall not be used. Tetrachloroethylene (perchloroethylene) and 1, 2, 4 trichlorobenzene fluids shall not be used. Liquid dielectrics in retrofitted equipment shall be certified by the manufacturer as having less than 50 parts per million (ppm) PCB content. In lieu of the manufacturer's certification, the Contractor may submit a test sample of the dielectric in accordance with ASTM D 923 and have tests performed per ASTM D 4059 at a testing facility approved by the Contracting Officer. Equipment with test results indicating PCB level exceeding 50 ppm shall be replaced.

2.16 FACTORY TESTS

Factory tests shall be performed, as follows, in accordance with the applicable publications and with other requirements of these specifications. The Contracting Officer shall be notified at least 10 days before the equipment is ready for testing. The Contracting Officer

reserves the right to witness the tests.

a. Transformers: Manufacturer's standard routine tests in accordance with IEEE C57.12.00.

b. Factory Preformed Terminations: Wet withstand voltage tests in accordance with IEEE Std 48 for the next higher BIL level.

c. Electrical Power Insulators: Manufacturer's standard tests in accordance with ANSI C29.1.

PART 3 EXECUTION

3.1 GENERAL INSTALLATION REQUIREMENTS

Equipment and devices shall be installed and energized in accordance with the manufacturer's published instructions. Circuits installed aerially shall conform to the requirements of Section 16370 ELECTRICAL DISTRIBUTION SYSTEM, AERIAL. Steel conduits installed underground shall be installed and protected from corrosion in conformance with the requirements of Section 16415 ELECTRICAL WORK, INTERIOR. Except as covered herein, excavation, trenching, and backfilling shall conform to the requirements of Section 02222 EXCAVATION, TRENCHING, AND BACKFILLING FOR UTILITIES SYSTEMS. Concrete work shall conform to the requirements of Section 03300 CAST-IN-PLACE STRUCTURAL CONCRETE.

3.1.1 Conformance to Codes

The installation shall comply with the requirements and recommendations of NFPA 70 and ANSI C2 as applicable.

3.1.2 Verification of Dimensions

The Contractor shall become familiar with details of the work, shall verify dimensions in the field, and shall advise the Contracting Officer of any discrepancy before performing any work.

3.1.3 Disposal of Liquid Dielectrics

PCB-contaminated dielectrics must be marked as PCB and transported to and incinerated by an approved EPA waste disposal facility. The Contractor shall furnish certification of proper disposal. Contaminated dielectrics shall not be diluted to lower the contamination level.

3.2 CABLE INSTALLATION

The Contractor shall obtain from the manufacturer an installation manual or set of instructions which addresses such aspects as cable construction, insulation type, cable diameter, bending radius, cable temperature, lubricants, coefficient of friction, conduit cleaning, storage procedures, moisture seals, testing for and purging moisture, etc. The Contractor shall then prepare a checklist of significant requirements perform pulling calculations and prepare a pulling plan which shall be submitted along with the manufacturers instructions in accordance with SUBMITTALS.

3.2.1 Cable Installation Plan and Procedure

Cable shall be installed strictly in accordance with the cable manufacturer's recommendations. Each circuit shall be identified by means

of a fiber, laminated plastic, or non-ferrous metal tags, or approved equal, in each manhole, handhole, junction box, and each terminal. Each tag shall contain the following information; cable type, conductor size, circuit number, circuit voltage, cable destination and phase identification.

3.2.1.1 Cable Inspection

The cable reel shall be inspected for correct storage positions, signs of physical damage, and broken end seals. If end seal is broken, moisture shall be removed from cable in accordance with the cable manufacturer's recommendations.

3.2.1.2 Duct Cleaning

Duct shall be cleaned with an assembly that consists of a flexible mandrel (manufacturers standard product in lengths recommended for the specific size and type of duct) that is 1/4 inch less than inside diameter of duct, 2 wire brushes, and a rag. The cleaning assembly shall be pulled through conduit a minimum of 2 times or until less than a volume of 8 cubic inches of debris is expelled from the duct.

3.2.1.3 Duct Lubrication

The cable lubricant shall be compatible with the cable jacket for cable that is being installed. Application of lubricant shall be in accordance with lubricant manufacturer's recommendations.

3.2.1.4 Cable Installation

The Contractor shall provide a cable feeding truck and a cable pulling winch as required. The Contractor shall provide a pulling grip or pulling eye in accordance with cable manufacturer's recommendations. The pulling grip or pulling eye apparatus shall be attached to polypropylene or manilla rope followed by lubricant front end packs and then by power cables. A dynamometer shall be used to monitor pulling tension. Pulling tension shall not exceed cable manufacturer's recommendations. The Contractor shall not allow cables to cross over while cables are being fed into duct. For cable installation in cold weather, cables shall be kept at 50 degrees F temperature for at least 24 hours before installation.

3.2.1.5 Cable Installation Plan

The Contractor shall submit a cable installation plan for all cable pulls in accordance with the detail drawings portion of paragraph SUBMITTALS. Cable installation plan shall include:

a. Site layout drawing with cable pulls identified in numeric order of expected pulling sequence and direction of cable pull.

b. List of cable installation equipment.

c. Lubricant manufacturer's application instructions.

d. Procedure for resealing cable ends to prevent moisture from entering cable.

e. Cable pulling tension calculations of all cable pulls.

f. Cable percentage conduit fill.

g. Cable sidewall thrust pressure.

h. Cable minimum bend radius and minimum diameter of pulling wheels used.

i. Cable jam ratio.

j. Maximum allowable pulling tension on each different type and size of conductor.

k. Maximum allowable pulling tension on pulling device.

3.2.2 Duct Line

Low-voltage cables shall be installed in duct lines where indicated. Cable splices in low-voltage cables shall be made in manholes and handholes only, except as otherwise noted. Neutral and grounding conductors shall be installed in the same duct with their associated phase conductors.

3.3 DUCT LINES

3.3.1 Requirements

Numbers and sizes of ducts shall be as indicated. Duct lines shall be laid with a minimum slope of 4 inches per 100 feet. Depending on the contour of the finished grade, the high-point may be at a terminal, a manhole, a handhole, or between manholes or handholes. Short-radius manufactured 90-degree duct bends may be used only for pole or equipment risers, unless specifically indicated as acceptable. The minimum manufactured bend radius shall be 18 inches for ducts of less than 3 inch diameter, and 36 inches for ducts 3 inches or greater in diameter. Otherwise, long sweep bends having a minimum radius of 25 feet shall be used for a change of direction of more than 5 degrees, either horizontally or vertically. Both curved and straight sections may be used to form long sweep bends, but the maximum curve used shall be 30 degrees and manufactured bends shall be used. Ducts shall be provided with end bells whenever duct lines terminate in manholes or handholes.

3.3.2 Treatment

Ducts shall be kept clean of concrete, dirt, or foreign substances during construction. Field cuts requiring tapers shall be made with proper tools and match factory tapers. A coupling recommended by the duct manufacturer shall be used whenever an existing duct is connected to a duct of different material or shape. Ducts shall be stored to avoid warping and deterioration with ends sufficiently plugged to prevent entry of any water or solid substances. Ducts shall be thoroughly cleaned before being laid. Plastic ducts shall be stored on a flat surface and protected from the direct rays of the sun.

3.3.3 Concrete Encasement

Ducts requiring concrete encasements shall comply with NFPA 70, except that electrical duct bank configurations for ducts 6 inches in diameter shall be determined by calculation and as shown on the drawings. The separation between adjacent electric power and communication ducts shall conform to ANSI C2. Duct line encasements shall be monolithic construction. Where a connection is made to a previously poured encasement, the new encasement

shall be well bonded or doweled to the existing encasement. The Contractor shall submit proposed bonding method for approval in accordance with the detail drawing portion of paragraph SUBMITTALS. At any point, except railroad and airfield crossings, tops of concrete encasements shall be not less than the cover requirements listed in NFPA 70. At railroad and airfield crossings, ductlines shall be encased with concrete and reinforced as indicated to withstand specified surface loadings. Tops of concrete encasements shall be not less than 5 feet below top of rails or airfield paving unless otherwise indicated. Where ducts are jacked under existing pavement, rigid steel conduit will be installed because of its strength. To protect the corrosion-resistant conduit coating, predrilling or installing conduit inside a larger iron pipe sleeve (jack-and-sleeve) is required. For crossings of existing railroads and airfield pavements greater than 50 feet in length, the predrilling method or the jack-and-sleeve method will be used. Separators or spacing blocks shall be made of steel, concrete, plastic, or a combination of these materials placed not farther apart than 4 feet on centers. Ducts shall be securely anchored to prevent movement during the placement of concrete and joints shall be staggered at least 6 inches vertically.

3.3.4 Installation of Couplings

Joints in each type of duct shall be made up in accordance with the manufacturer's recommendations for the particular type of duct and coupling selected and as approved.

3.3.4.1 Plastic Duct

Duct joints shall be made by brushing a plastic solvent cement on insides of plastic coupling fittings and on outsides of duct ends. Each duct and fitting shall then be slipped together with a quick 1/4-turn twist to set the joint tightly.

3.3.5 Duct Line Markers

Duct line markers shall be provided at the ends of long duct line stubouts or for other ducts whose locations are indeterminate because of duct curvature or terminations at completely below-grade structures. In addition to markers, a 5 mil brightly colored plastic tape, not less than 3 inches in width and suitably inscribed at not more than 10 feet on centers with a continuous metallic backing and a corrosion-resistant 1 mil metallic foil core to permit easy location of the duct line, shall be placed approximately 12 inches below finished grade levels of such lines.

3.4 MANHOLES, HANDHOLES, AND PULLBOXES

3.4.1 General

Manholes shall be constructed approximately where shown. The exact location of each manhole shall be determined after careful consideration has been given to the location of other utilities, grading, and paving. The location of each manhole shall be approved by the Contracting Officer before construction of the manhole is started. Manholes shall be the type noted on the drawings and shall be constructed in accordance with the applicable details as indicated. Top, walls, and bottom shall consist of reinforced concrete. Walls and bottom shall be of monolithic concrete construction. The Contractor may at his option utilize monolithically constructed precast-concrete manholes having the required strength and inside dimensions as required by the drawings or specifications. In paved

areas, frames and covers for manhole and handhole entrances in vehicular traffic areas shall be flush with the finished surface of the paving. In unpaved areas, the top of manhole covers shall be approximately 1/2 inch above the finished grade. Where existing grades that are higher than finished grades are encountered, concrete assemblies designed for the purpose shall be installed to elevate temporarily the manhole cover to existing grade level. Where duct lines enter manholes, the sections of duct may be either cast in the concrete or may enter the manhole through a square or rectangular opening of suitable dimensions provided in the manhole walls. Where openings are provided for the entrance of duct lines, the space between ducts and between ducts and manhole walls shall be caulked tight with lead wool or approved equal. A cast metal grille-type sump frame and cover shall be installed over the manhole sump. A cable-pulling iron shall be installed in the wall opposite each duct line entrance.

3.4.2 Communications Manholes

The number of hot-dip galvanized cable racks with a plastic coating over the galvanizing indicated shall be installed in each telephone manhole. Each cable rack shall be provided with 2 cable hooks. Cables for the telephone and communication systems will be installed by others.

3.4.3 Ground Rods

A ground rod shall be installed at the manholes, handholes and pullboxes. Ground rods shall be driven into the earth before the manhole floor is poured so that approximately 4 inches of the ground rod will extend above the manhole floor. When precast concrete manholes are used, the top of the ground rod may be below the manhole floor and a No. 1/0 AWG ground conductor brought into the manhole through a watertight sleeve in the manhole wall.

3.5 PAD-MOUNTED EQUIPMENT INSTALLATION

3.5.1 Concrete Pads

3.5.1.1 Construction

Concrete pads for pad-mounted electrical equipment shall be poured-in-place. Pads shall be constructed as indicated, except that exact pad dimensions and mounting details are equipment specific and are the responsibility of the Contractor. Tops of concrete pads shall be level and shall project 4 inches above finished paving or grade and sloped to drain. Edges of concrete pads shall have 3/4 inch chamfer. Conduits for primary, secondary, and grounding conductors shall be set in place prior to placement of concrete pads. Where grounding electrode conductors are installed through concrete pads, PVC conduit sleeves shall be installed through the concrete to provide physical protection. To facilitate cable installation and termination, the concrete pad shall be provided with a rectangular hole below the primary and secondary compartments, sized in accordance with the manufacturer's recommended dimensions. Upon completion of equipment installation the rectangular hole shall be filled with masonry grout.

3.5.1.2 Concrete and Reinforcement

Concrete work shall comply with the requirements of Section 03300 CAST-IN-PLACE STRUCTURAL CONCRETE. Concrete pad reinforcement shall be in

accordance with Section 03200 CONCRETE REINFORCEMENT.

3.5.1.3 Sealing

When the installation is complete, the Contractor shall seal all conduit and other entries into the equipment enclosure with an approved sealing compound. Seals shall be of sufficient strength and durability to protect all energized live parts of the equipment from rodents, insects, or other foreign matter.

3.5.2 Padlocks

Padlocks shall be provided for pad-mounted equipment and for each fence gate. Padlocks shall be keyed as directed by the Contracting Officer. Padlocks shall comply with ASTM F 883.

3.6 CONNECTIONS TO BUILDINGS

Cables shall be extended into the buildings as indicated, and shall be connected to the first applicable termination point in each building. Interfacing with building interior conduit systems shall be at conduit stubouts terminating 5 feet outside of a building and 2 feet below finished grade as specified and provided under Section 16415 ELECTRICAL WORK, INTERIOR. After installation of cables, conduits shall be sealed with caulking compound to prevent entrance of moisture or gases into buildings.

3.7 GROUNDING

Equipment frames of metal-enclosed equipment, and other noncurrent-carrying metal parts, such as cable shields, cable sheaths and armor, and metallic conduit shall be grounded. At least 2 connections shall be provided from a transformer. Metallic frames and covers of handholes and pull boxes shall be grounded by use of a braided, copper ground strap with equivalent ampacity of No. 6 AWG.

3.7.1 Grounding Electrodes

Grounding electrodes shall be installed as shown on the drawings and as follows:

a. Driven rod electrodes - Unless otherwise indicated, ground rods shall be driven into the earth until the tops of the rods are approximately 1 foot below finished grade.

b. Ground ring - A ground ring shall be installed as shown consisting of bare copper conductors installed 24 inches, plus or minus 3 inches, below finished top of soil grade. Ground ring conductors shall be sized as shown No. 2 AWG, minimum.

d. Additional electrodes - When the required ground resistance is not met, additional electrodes shall be provided interconnected with grounding conductors to achieve the specified ground resistance. The additional electrodes will be up to three, 10 feet rods spaced a minimum of 10 feet apart a single extension-type rod, 3/4 inch diameter, up to 30 feet long, driven perpendicular to grade coupled and driven with the first rod. In high ground resistance, UL listed chemically charged ground rods may be used. If the resultant resistance exceeds 25 ohms measured not less than

48 hours after rainfall, the Contracting Officer shall be notified immediately.

3.7.2 Grounding and Bonding Connections

Connections above grade shall be made by the fusion-welding process or with bolted solderless connectors, in compliance with UL 467, and those below grade shall be made by a fusion-welding process. Where grounding conductors are connected to aluminum-composition conductors, specially treated or lined copper-to-aluminum connectors suitable for this purpose shall be used.

3.7.3 Grounding and Bonding Conductors

Grounding and bonding conductors include conductors used to bond transformer enclosures and equipment frames to the grounding electrode system. Grounding and bonding conductors shall be sized as shown, and located to provide maximum physical protection. Bends greater than 45 degrees in ground conductors are not permitted. Routing of ground conductors through concrete shall be avoided. When concrete penetration is necessary, nonmetallic conduit shall be cast flush with the points of concrete entrance and exit so as to provide an opening for the ground conductor, and the opening shall be sealed with a suitable compound after installation.

3.7.4 Surge Arrester Grounding

Surge arresters and neutrals shall be bonded directly to the transformer enclosure and then to the grounding electrode system with a bare copper conductor, sized as shown. Lead lengths shall be kept as short as practicable with no kinks or sharp bends.

3.7.5 Manhole, Handhole, or Concrete Pullbox Grounding

Ground rods installed in electrical-distribution-system manholes, handholes, or concrete pullboxes shall be connected to cable racks, cable-pulling irons, the cable shielding, metallic sheath, and armor at each cable joint or splice by means of a No. 4 AWG braided tinned copper wire. Connections to metallic cable sheaths shall be by means of tinned terminals soldered to ground wires and to cable sheaths. Care shall be taken in soldering not to damage metallic cable sheaths or shields. Ground rods shall be protected with a double wrapping of pressure-sensitive plastic tape for a distance of 2 inches above and 6 inches below concrete penetrations. Grounding electrode conductors shall be neatly and firmly attached to manhole or handhole walls and the amount of exposed bare wire shall be held to a minimum.

3.8 FIELD TESTING

3.8.1 General

Field testing shall be performed in the presence of the Contracting Officer. The Contractor shall notify the Contracting Officer 10 days prior to conducting tests. The Contractor shall furnish all materials, labor, and equipment necessary to conduct field tests. The Contractor shall perform all tests and inspections recommended by the manufacturer unless specifically waived by the Contracting Officer. The Contractor shall maintain a written record of all tests which includes date, test performed, personnel involved, devices tested, serial number and name of test

equipment, and test results. Field test reports shall be signed and dated by the Contractor.

3.8.2 Safety

The Contractor shall provide and use safety devices such as rubber gloves, protective barriers, and danger signs to protect and warn personnel in the test vicinity. The Contractor shall replace any devices or equipment which are damaged due to improper test procedures or handling.

3.8.3 Ground-Resistance Tests

The resistance of each grounding electrode each grounding electrode system the ground ring shall be measured using the fall-of-potential method defined in IEEE Std 81. Ground resistance measurements shall be made before the electrical distribution system is energized and shall be made in normally dry conditions not less than 48 hours after the last rainfall. Resistance measurements of separate grounding electrode systems shall be made before the systems are bonded together below grade. The combined resistance of separate systems may be used to meet the required resistance, but the specified number of electrodes must still be provided.

a. Single rod electrode - 25 ohms.

b. Multiple rod electrodes - 25 ohms.

c. Ground ring - 25 ohms.

3.8.4 Medium-Voltage Cable Test

After installation and before the operating test or connection to an existing system, the medium-voltage cable system shall be given a high potential test. Direct-current voltage shall be applied on each phase conductor of the system by connecting conductors as one terminal and connecting grounds or metallic shieldings or sheaths of the cable as the other terminal for each test. Prior to making the test, the cables shall be isolated by opening applicable protective devices and disconnecting equipment. The test shall be conducted with all splices, connectors, and terminations in place. The method, voltage, length of time, and other characteristics of the test for initial installation shall be in accordance with NEMA WC 8 for the particular type of cable installed, and shall not exceed the recommendations of IEEE Std 404 for cable joints and IEEE Std 48 for cable terminations unless the cable and accessory manufacturers indicate higher voltages are acceptable for testing. Should any cable fail due to a weakness of conductor insulation or due to defects or injuries incidental to the installation or because of improper installation of cable, cable joints, terminations, or other connections, the Contractor shall make necessary repairs or replace cables as directed. Repaired or replaced cables shall be retested.

3.8.5 Low-Voltage Cable Test

Low-voltage cable, complete with splices, shall be tested for insulation resistance after the cables are installed, in their final configuration, ready for connection to the equipment, and prior to energization. The test voltage shall be 500 volts dc, applied for one minute between each conductor and ground and between all possible combinations conductors in the same trench, duct, or cable, with all other conductors in the same trench, duct, or conduit. The minimum value of insulation shall be:

$$R \text{ in megohms} = \frac{(\text{rated voltage in kV} + 1) \times 1000}{(\text{length of cable in feet})}$$

Each cable failing this test shall be repaired or replaced. The repaired cable shall be retested until failures have been eliminated.

3.8.6 Liquid-Filled Transformer Tests

The following field tests shall be performed on all liquid-filled transformers. Pass-fail criteria shall be in accordance with transformer manufacturer's specifications.

a. Insulation resistance test phase-to-ground.

b. Turns ratio test.

c. Correct phase sequence.

d. Correct operation of tap changer.

3.8.7 Pre-Energization Services

Calibration, testing, adjustment, and placing into service of the installation shall be accomplished by a manufacturer's product field service engineer or independent testing company with a minimum of 2 years of current product experience. The following services shall be performed on the equipment listed below. These services shall be performed subsequent to testing but prior to the initial energization. The equipment shall be inspected to ensure that installation is in compliance with the recommendations of the manufacturer and as shown on the detail drawings. Terminations of conductors at major equipment shall be inspected to ensure the adequacy of connections. Bare and insulated conductors between such terminations shall be inspected to detect possible damage during installation. If factory tests were not performed on completed assemblies, tests shall be performed after the installation of completed assemblies. Components shall be inspected for damage caused during installation or shipment to ensure packaging materials have been removed. Components capable of being both manually and electrically operated shall be operated manually prior to the first electrical operation. Components capable of being calibrated, adjusted, and tested shall be calibrated, adjusted, and tested in accordance with the instructions of the equipment manufacturer. Items for which such services shall be provided, but are not limited to, are the following:

a. Pad-mounted transformers

3.8.8 Operating Tests

After the installation is completed, and at such times as the Contracting Officer may direct, the Contractor shall conduct operating tests for approval. The equipment shall be demonstrated to operate in accordance with the requirements herein. An operating test report shall be submitted in accordance with paragraph SUBMITTALS.

3.9 ACCEPTANCE

Final acceptance of the facility will not be given until the Contractor has successfully completed all tests and after all defects in installation, material or operation have been corrected.

3.10 DIGITAL POWER MONITOR (PM)

The microprocessor based PM shall be door-mounted, NEMA 3R, user friendly such that operators can easily become familiar with the implementation.

3.10.1 Inputs from Industry Standard Instrument Transformers

The PM shall accept inputs from industry standard instrument transformers (120 VAC secondary PTs and 5A secondary CTs). The current and voltage signals shall be digitally sampled at a rate high enough to provide accurate RMS sensing and valid data for waveform analysis beyond the 30th harmonic (fundamental of 60 Hz). The PM shall retain historical circuit data, time and date, setup and configuration values, and diagnostics data in the event of a control power failure, without the need for an internal battery. The PM shall be equipped with and integral LED display to provide local access to metered quantities. The following instantaneous readings shall be reported by the PM:

a) Current, per phase RMS
b) Voltage, phase-to-phase & phase-to-neutral
c) Real power, 3-phase total
d) Reactive power, 3-phase total
e) Apparent power, 3-phase total
f) Power factor, 3-phase total & per phase
g) Frequency
h) Temperature
i) Peak demand current, per phase
j) Peak demand, real power
k) Accumulated Energy, (MWH and MVARH)
l) Capture, display, and store phase voltage and current
m) Provide harmonic information for each circuit waveform including Total Harmonic Distortion (THD), RMS magnitudes, peak values
n) K-factor per phase

3.10.2 Reset of the Electrical parameters

Reset of the following electrical parameters shall also be allowed from the front of the Circuit Monitor:

a) Peak demand current
b) Peak demand power
c) Energy (MWH)
d) Reactive energy (MVARH)

3.10.3 Input Ranges:

a) CT rating (2000:5)
b) PT rating -The PM shall have direct voltage input up to 600V or shall be provided with PTs rated at 480:120.
c) System type 4-wire
d) Demand interval (5-60 min.)

3.10.4 Reset and Setup Functions

All reset and setup functions shall be keyswitch-protected or password-protected to avoid accidental or prevent unauthorized changes.

3.10.5 Power Monitor

The power monitor shall provide field settable protection functions with trip an and/or alarm outputs for the following:

a) Voltage Phase Loss
b) Phase Unbalance
c) Phase Reversal
d) Over/Under-Voltage
e) Delay

3.10.6 Waveform Capture Capability

The PM shall include waveform capture capability. Upon a user-initiated command, the PM shall capture and store, in nonvolatile memory, 3-phase voltage and current samples consisting of 256 data point each. These data points shall represent at least 4 cycles of each current or voltage waveform. These samples shall be evenly gathered from three current phases such that the original power signals with proper magnitude and phase relationships may be reconstructed. It shall be possible to recreate the original power signal from the data with sufficient accuracy such that steady-state power harmonic analysis will provide valid information on harmonic content for up to the 30th harmonic of the fundamental power frequency.

3.10.7 Interface to Computer Network

The PM shall have the capability to interface to a computer network, via an RS485/RS422 serial communications port, for data collection, storage and/or printout via a local area network cable. Communications rates shall be adjustable up to 1.2 or 19.2 Kbaud. The PM shall have pulse initiation for direct connection to the EMCS system. The PM and all accessories shall be U.L. listed. All equipment included as part of the PM shall supplied and installed in the switchboard by the switchboard manufacturer and tested prior to shipment to the job site. The PM shall have a Display Keypad with large keys for operator selections. The keys shall have a raised perimeter and tactile feedback to ensure a positive response even with gloved hand operation. The keys shall be clearly marked to indicate the function and be separated into meaningful groups with display prompts to assist the user in operation. All wiring required to externally connect equipment lineups shall be installed by the Contractor. Contractor interconnection wiring requirements shall be clearly identified on the PM system drawing.

3.10.8 Start-up and Training

On-site start-up and training of the PM shall be included. Start-up shall include a complete working demonstration of the PM with simulation of possible operating conditions which may be encountered. Training shall include any documentation and hands-on exercises necessary to enable electrical operations personnel to assume full operating responsibility for the PM after completion of the training period. A one day start-up assistance and 3 day of training shall be included.

-- End of Section --

SECTION TABLE OF CONTENTS

DIVISION 16 - ELECTRICAL

SECTION 16415

ELECTRICAL WORK, INTERIOR

12/91

PART 1 GENERAL

1.1 REFERENCES
1.2 GENERAL
1.2.1 Rules
1.2.2 Coordination
1.2.3 Special Environments
1.2.3.1 Weatherproof Locations
1.2.4 Standard Products
1.2.5 Identification Nameplates
1.2.6 As Built Drawings
1.3 SUBMITTALS
1.4 WORKMANSHIP

PART 2 PRODUCTS

2.1 MATERIALS AND EQUIPMENT
2.1.1 Cables and Wires
2.1.1.1 Telephone Cables
2.1.2 Cable Trays
2.1.2.1 Ladder
2.1.3 Circuit Breakers
2.1.3.1 Molded-Case and Insulated-Case Circuit Breakers
2.1.4 Conduit and Tubing
2.1.4.1 Electrical, Zinc-Coated Steel Metallic Tubing (EMT)
2.1.4.2 Electrical Nonmetallic Tubing (ENT)
2.1.4.3 Flexible Conduit, Steel and Plastic
2.1.4.4 Intermediate Metal Conduit
2.1.4.5 PVC Coated Rigid Steel Conduit
2.1.4.6 Rigid Metal Conduit
2.1.5 Conduit and Device Boxes and Fittings
2.1.5.1 Boxes, Metallic Outlet
2.1.5.2 Fittings for Conduit and Outlet Boxes
2.1.6 Conduit Coatings Plastic Resin System
2.1.7 Connectors, Wire Pressure
2.1.7.1 Copper Conductors
2.1.8 Electrical Grounding and Bonding Equipment
2.1.8.1 Ground Rods
2.1.8.2 Ground Bus
2.1.9 Enclosures
2.1.9.1 Cabinets and Boxes, Volume Greater Than 0.00164 Cubic Meters 100 Cubic Inches
2.1.9.2 Circuit Breaker
2.1.10 Fixtures, Lighting and Fixture Accessories/Components
2.1.10.1 Fixture, Auxiliary or Emergency
2.1.10.2 Incandescent Fixture

2.1.10.3 Fluorescent
2.1.10.4 High-Intensity-Discharge
2.1.11 Fuses and Fuseholders
2.1.11.1 Fuses, Low Voltage Cartridge Type
2.1.11.2 Fuses, Class R
2.1.11.3 Fuseholders
2.1.12 Instruments, Electrical Indicating
2.1.13 Motors, ac, Fractional and Integral
2.1.13.1 Rating
2.1.13.2 Motor Efficiencies
2.1.14 Motor Controls and Motor Control Centers
2.1.15 Panelboards
2.1.16 Receptacles
2.1.16.1 Hospital Grade
2.1.16.2 General Grade
2.1.16.3 Ground Fault Interrupters
2.1.16.4 Hospital Grade Tamper Resistant
2.1.17 Service Equipment
2.1.18 Splice, Conductor
2.1.19 Switchboard, Dead Front Distribution
2.1.20 Switchgear Assemblies, Power
2.1.21 Snap Switches
2.1.22 Tapes
2.1.22.1 Plastic Tape
2.1.22.2 Rubber Tape
2.1.23 Transformers
2.1.23.1 Conventional Dry-Type
2.1.24 Wiring Devices
2.1.25 Transient Voltage Surge Suppressors (TVSS)

PART 3 EXECUTION

3.1 GROUNDING
3.1.1 Ground Rods
3.1.2 Ground Bus
3.1.3 Grounding Conductors
3.2 WIRING METHODS
3.2.1 General Requirements
3.2.2 Conduit and Tubing Systems
3.2.2.1 Below Slab-on-Grade or in the Ground
3.2.2.2 Installing in Slabs Including Slabs on Grade
3.2.2.3 Changes in Direction of Runs
3.2.2.4 Supports
3.2.2.5 Communications Raceways
3.2.3 Cable Trays
3.2.4 Cables and Conductors
3.2.4.1 Sizes
3.2.4.2 Power Conductor Identification
3.2.4.3 Control Conductor Identification
3.3 BOXES AND SUPPORTS
3.3.1 Boxes for Use with Raceway Systems
3.3.2 Pull Boxes
3.3.3 Conduit Stub-Ups
3.4 DEVICE PLATES
3.5 RECEPTACLES
3.5.1 Single and Duplex
3.5.2 Weatherproof Applications
3.5.2.1 Damp Locations
3.5.2.2 Wet Locations

3.5.2.3 Waiting Areas
3.6 WALL SWITCHES
3.7 SERVICE EQUIPMENT
3.8 PANELBOARDS
3.8.1 Panelboards
3.9 FUSES
3.9.1 Cartridge Fuses; Noncurrent-Limiting Type
3.10 UNDERGROUND SERVICE
3.11 MOTORS
3.12 MOTOR CONTROL
3.13 MOTOR-DISCONNECT MEANS
3.14 TRANSFORMERS
3.14.1 Conventional Dry-Type Transformers
3.15 LAMPS AND LIGHTING FIXTURES
3.15.1 Lamps
3.15.1.1 Incandescent
3.15.1.2 Fluorescent
3.15.1.3 High-Intensity-Discharge
3.15.2 Fixtures
3.15.2.1 Accessories
3.15.2.2 Suspended Fixtures
3.15.2.3 Ceiling Fixtures
3.15.2.4 Sockets
3.16 EQUIPMENT CONNECTIONS
3.16.1 Motors and Motor Control
3.16.2 Installation of Government-Furnished Equipment
3.17 PAINTING AND FINISHING
3.18 REPAIR OF EXISTING WORK
3.19 TESTS
3.20 ONE-LINE DIAGRAM

-- End of Section Table of Contents --

SECTION 16415

ELECTRICAL WORK, INTERIOR
12/91

PART 1 GENERAL

1.1 REFERENCES

The publications listed below form a part of this specification to the extent referenced. The publications are referred to in the text by basic designation only.

AMERICAN NATIONAL STANDARDS INSTITUTE (ANSI)

ANSI C12.11	(1987) Instrument Transformers for Revenue Metering, 10 kV BIL through 350 kV (0.6 kV NSV through 69 kV NSV)
ANSI C39.1	(1981; R 1992) Electrical Analog Indicating Instruments
ANSI C57.12.10	(1988) 230 kV and Below 833/958 through 8333/10 417 kVA, Single-Phase, and 750/862 through 60 000/80 000/100 000 kVA, Three-Phase without Load Tap Changing; and 3750/4687 through 60 000/80 000/100 000 kVA with Load Tap Changing - Safety Requirements
ANSI C82.4	(1992) Ballasts for High-Intensity-Discharge and Low-Pressure Sodium Lamps (Multiple-Supply Type)

AMERICAN SOCIETY FOR TESTING AND MATERIALS (ASTM)

ASTM D 709	(1992) Laminated Thermosetting Materials

CODE OF FEDERAL REGULATIONS (CFR)

47 CFR 18	Rules and Regulations: Industrial, Scientific, and Medical Equipment

FEDERAL SPECIFICATIONS (FS)

FS L-C-530	(Rev C) Coating, Pipe, Thermoplastic Resin

INSTITUTE OF ELECTRICAL AND ELECTRONICS ENGINEERS (IEEE)

IEEE C37.20.1	(1993) Metal-Enclosed Low-Voltage Power Circuit-Breaker Switchgear
IEEE C57.12.01	(1989) Dry-Type Distribution and Power Transformers Including Those With Solid

	Cast and/or Resin - Encapsulated Windings
IEEE C57.12.80	(1978; R 1992) Terminology for Power and Distribution Transformers
IEEE C57.12.91	(1979) Test Code for Dry-Type Distribution and Power Transformers
IEEE C57.13	(1993) Instrument Transformers
IEEE C57.94	(1982; R 1987) Installation, Application, Operation and Maintenance of Dry-Type General Purpose Distribution and Power Transformers
IEEE C57.98	(1993) Guide for Transformer Impulse Tests
IEEE C57.105	(1978; R 1992) Transformer Connections in Three-Phase Distribution Systems
IEEE C62.41	(1991) Surge Voltages in Low-Voltage AC Power Circuits
IEEE Std 81	(1983) Guide for Measuring Earth Resistivity, Ground Impedance, and Earth Surface Potentials of a Ground System (Part 1)

INSULATED CABLE ENGINEERS ASSOCIATION (ICEA)

ICEA S-80-576	(1988) Communications Wire and Cable for Wiring of Premises

NATIONAL ELECTRICAL MANUFACTURERS ASSOCIATION (NEMA)

NEMA 250	(1991) Enclosures for Electrical Equipment (1000 Volts Maximum)
NEMA AB 1	(1993) Molded Case Circuit Breakers and Molded Case Switches
NEMA FU 1	(1986) Low Voltage Cartridge Fuses
NEMA ICS 1	(1993) Industrial Controls and Systems
NEMA ICS 2	(1993) Industrial Control Devices, Controllers and Assemblies
NEMA ICS 3	(1993) Industrial Systems
NEMA ICS 6	(1993) Enclosures for Industrial Control and Systems
NEMA LE 4	(1987) Recessed Luminaires, Ceiling Compatibility
NEMA MG 1	(1993; Rev 1-1993; Rev 2-1995) Motors and Generators

NEMA MG 10	(1994) Energy Management Guide for Selection and Use of Polyphase Motors
NEMA OS 1	(1989) Sheet-Steel Outlet Boxes, Device Boxes, Covers, and Box Supports
NEMA PB 1	(1990) Panelboards
NEMA PB 2	(1989) Deadfront Distribution Switchboards
NEMA RN 1	(1989) Polyvinyl-Chloride (PVC) Externally Coated Galvanized Rigid Steel Conduit and Intermediate Metal Conduit
NEMA ST 20	(1992) Dry-Type Transformers for General Applications
NEMA TC 13	(1993) Electrical Nonmetallic Tubing (ENT)
NEMA WD 1	(1983; R 1989) General Requirements for Wiring Devices
NEMA WD 6	(1988) Wiring Devices - Dimensional Requirements

NATIONAL FIRE PROTECTION ASSOCIATION (NFPA)

NFPA 70	(1996) National Electrical Code
NFPA 101	(1994) Safety to Life from Fire in Buildings and Structures

UNDERWRITERS LABORATORIES (UL)

UL-03	(1995) Electrical Construction Materials Directory
UL 1	(1993; Rev thru Jan 1995) Flexible Metal Conduit
UL 6	(1993) Rigid Metal Conduit
UL 20	(1995) General-Use Snap Switches
UL 44	(1991; Rev thru Jan 1995) Rubber-Insulated Wires and Cables
UL 50	(1992; Rev thru Nov 1994) Enclosures for Electrical Equipment
UL 67	(1993; Rev thru Dec 1993) Panelboards
UL 83	(1991; Rev thru Oct 1994) Thermoplastic-Insulated Wires and Cables
UL 198E	(1988; Rev Jul 1988) Class R Fuses

UL 360	(1986; Rev thru Dec 1994) Liquid-Tight Flexible Steel Conduit
UL 467	(1993) Grounding and Bonding Equipment
UL 486A	(1991; Rev Oct 1991) Wire Connectors and Soldering Lugs for Use with Copper Conductors
UL 486C	(1991; Rev thru Sep 1992) Splicing Wire Connectors
UL 489	(1991; Rev thru Jun 1995) Molded-Case Circuit Breakers and Circuit-Breaker Enclosures
UL 498	(1991; Rev thru Oct 1994) Attachment Plugs and Receptacles
UL 506	(1994; Rev Jul 1994) Specialty Transformers
UL 508	(1993) Industrial Control Equipment
UL 510	(1994) Insulating Tape
UL 512	(1993) Fuseholders
UL 514A	(1991; Rev Apr 1995) Metallic Outlet Boxes
UL 514B	(1992; Rev thru Apr 1995) Fittings for Conduit and Outlet Boxes
UL 542	(1994) Lampholders, Starters, and Starter Holders for Fluorescent Lamps
UL 719	(1985; Rev thru Dec 1994) Nonmetallic-Sheathed Cables
UL 797	(1993; Rev May 1995) Electrical Metallic Tubing
UL 845	(1995) Motor Control Centers
UL 869A	(1993; Rev Apr 1994) Reference Standard for Service Equipment
UL 891	(1994; Rev thru Jan 1995) Dead-Front Switchboards
UL 924	(1995) Emergency Lighting and Power Equipment
UL 935	(1995; Rev Jun 1995) Fluorescent-Lamp Ballasts
UL 943	(1993; Rev thru Jan 1995) Ground-Fault Circuit Interrupters
UL 1004	(1994) Electric Motors

UL 1029	(1994; Rev Oct 1994) High-Intensity-Discharge Lamp Ballasts
UL 1242	(1983; Rev thru Jul 1993) Intermediate Metal Conduit
UL 1561	(1994; Rev Jul 1995) Dry-Type General Purpose Power Transformers
UL 1570	(1988; Rev thru Mar 1995) Fluorescent Lighting Fixtures
UL 1571	(1991; Rev thru Mar 1995) Incandescent Lighting Fixtures
UL 1572	(1991; Rev thru Mar 1995) High Intensity Discharge Lighting Fixtures
UL 1660	(1994) Liquid-Tight Flexible Nonmetallic Conduit

1.2 GENERAL

1.2.1 Rules

The installation shall conform to the requirements of NFPA 70 and NFPA 101, unless more stringent requirements are indicated herein or shown.

1.2.2 Coordination

The drawings indicate the extent and the general location and arrangement of equipment, conduit, and wiring. The Contractor shall become familiar with all details of the work and verify all dimensions in the field so that the outlets and equipment shall be properly located and readily accessible. Lighting fixtures, outlets, and other equipment and materials shall be located to avoid interference with mechanical or structural features; otherwise, lighting fixtures shall be symmetrically located according to the room arrangement when uniform illumination is required, or asymmetrically located to suit conditions fixed by design and shown. Raceways, junction and outlet boxes, and lighting fixtures shall not be supported from sheet metal roof decks. If any conflicts occur necessitating departures from the drawings, details of and reasons for departures shall be submitted and approved prior to implementing any change. The Contractor shall coordinate the electrical work with HVAC and electrical drawings and provide all power related wiring even if they are not shown on electrical drawings.

1.2.3 Special Environments

1.2.3.1 Weatherproof Locations

Wiring, Fixtures, and equipment in designated locations shall conform to NFPA 70 requirements for installation in damp or wet locations.

1.2.4 Standard Products

Material and equipment shall be a standard product of a manufacturer regularly engaged in the manufacture of the product and shall essentially

duplicate items that have been in satisfactory use for at least 2 years prior to bid opening.

1.2.5 Identification Nameplates

Major items of electrical equipment and major components shall be permanently marked with an identification name to identify the equipment by type or function and specific unit number as indicated. Designation of motors shall coincide with their designation in the motor control center or panel. Unless otherwise specified, all identification nameplates shall be made of laminated plastic in accordance with ASTM D 709 with black outer layers and a white core. Edges shall be chamfered. Plates shall be fastened with black-finished round-head drive screws, except motors, or approved nonadhesive metal fasteners. When the nameplate is to be installed on an irregular-shaped object, the Contractor shall devise an approved support suitable for the application and ensure the proper installation of the supports and nameplates. In all instances, the nameplate shall be installed in a conspicuous location. At the option of the Contractor, the equipment manufacturer's standard embossed nameplate material with black paint-filled letters may be furnished in lieu of laminated plastic. The front of each panelboard, motor control center, switchgear, and switchboard shall have a nameplate to indicate the phase letter, corresponding color and arrangement of the phase conductors. The following equipment, as a minimum, shall be provided with identification nameplates:

Minimum 1/4 inch High Letters	Minimum 1/8 inch High Letters
Panelboards	Control Power Transformers
Starters	Control Devices
Safety Switches	Instrument Transformers
Motor Control Centers	
Transformers	
Equipment Enclosures	
Switchgear	
Switchboards	
Motors	

Each panel, section, or unit in motor control centers, switchgear or similar assemblies shall be provided with a nameplate in addition to nameplates listed above, which shall be provided for individual compartments in the respective assembly, including nameplates which identify "future," "spare," and "dedicated" or "equipped spaces."

1.2.6 As Built Drawings

Following the project completion or turnover, within 30 days the Contractor shall furnish two sets of as built drawings to the Contracting Officer.

1.3 SUBMITTALS

Government approval is required for submittals with a "GA" designation; submittals having an "FIO" designation are for information only. The following shall be submitted in accordance with Section 01300 SUBMITTAL

PROCEDURES:

SD-04 Drawings

Electrical Work; FIO.

Detail drawings for all materials and equipment specified. Detail drawings shall consist of a complete list of equipment and materials, including manufacturer's descriptive and technical data; catalog cuts; and any special installation instructions that may be required. Drawings shall show applicable schematic diagrams; and equipment layout and anchorage; and conduit and cable tray runs, anchorage, and support. Telephone system drawings showing actual layout, including locations, type any gauge of cables, and terminal assignment of wiring, after installation.

SD-09 Reports

Materials and Equipment; FIO.

The label or listing of the Underwriters Laboratories, Inc., shall be accepted as evidence that the materials or equipment conform to the applicable standards of that agency. In lieu of this label or listing, a statement from a nationally recognized, adequately equipped testing agency indicating that the items have been tested in accordance with required procedures and that the materials and equipment comply with all contract requirements will be accepted. However, materials and equipment installed in hazardous locations must bear the UL label unless the data submitted from other testing agency is specifically approved in writing by the Contracting Officer. Materials and equipment shall be approved based on the manufacturer's published data.

For other than equipment and materials specified to conform to UL publications, a manufacturer's statement indicating complete compliance with the applicable Federal Specification, or standard of the American Society for Testing and Materials, National Electrical Manufacturers Association, or other commercial standard, is acceptable.

SD-13 Certificates

Telephone Installer; FIO.

Qualifications of the telephone installer.

1.4 WORKMANSHIP

Materials and equipment shall be installed in accordance with recommendations of the manufacturer and as shown.

PART 2 PRODUCTS

2.1 MATERIALS AND EQUIPMENT

Materials and equipment shall conform to the respective publications and other requirements specified below. Materials and equipment not listed below shall be as specified elsewhere in this section.

2.1.1 Cables and Wires

Conductors in cables shall be annealed copper, except that AA-8000 series

aluminum conductors may be used as an equivalent for copper conductors of No. 6 AWG or larger. Intermixing of copper and aluminum conductors in these sizes is not permitted. Design is based on copper conductors and aluminum conductors shall have an ampacity not less than that of the indicated copper conductors. Cables shall be single-conductor type, unless otherwise indicated. Cables and wires shall conform to UL 44 for rubber-insulated type; UL 83 for the thermoplastic-insulated type; and UL 719 for the nonmetallic-sheathed cables. The following types shall be provided.

2.1.1.1 Telephone Cables

ICEA S-80-576

2.1.2 Cable Trays

Cable trays shall form a wireway system, and shall be of nominal 3 inch depth. Cable trays shall be constructed of aluminum. Trays shall include splice and end plates, dropouts, and miscellaneous hardware. Edges, fittings, and hardware shall be finished free from burrs and sharp edges. Fittings shall have not less than the load-carrying ability of straight tray sections and shall have manufacturer's minimum standard radius unless otherwise indicated. Radius of bends shall be 24 inches. Radius of bends shall be as shown.

2.1.2.1 Ladder

Ladder-type cable trays shall be of indicated width. Rung spacing shall be on 12 inch maximum centers as indicated.

2.1.3 Circuit Breakers

Circuit breakers shall have voltage, current and interrupting ratings as indicated. Fully rated circuit breakers shall be provided to obtain the specified interrupting rating. Fully rated circuit breakers or series rated circuit breakers in combinations approved for series applications by UL shall be provided as indicated, for specific pieces of distribution equipment, to obtain the specified interrupting rating. The fully rated circuit breakers will be acceptable where the series rated is specified. Panelboards or individual enclosures containing series rated circuit breakers shall be appropriately marked for use with the specified breakers at the designated short circuit level.

2.1.3.1 Molded-Case and Insulated-Case Circuit Breakers

NEMA AB 1 and UL 489 for circuit breakers.

a. Molded-Case Circuit Breakers: Single-pole breakers shall be full module size; two poles shall not be installed in a single module. Multipole breakers shall be of the common-trip type having a single operating handle, but for sizes of 100 amperes or less may consist of single-pole breakers permanently factory assembled into a multipole unit having an internal, mechanical, nontamperable common-trip mechanism and external handle ties. Breakers coordinated with current-limiting fuses shall have a combined interrupting capacity of 100,000 symmetrical amperes. All poles of associated breakers shall open if any fuse blows.

2.1.4 Conduit and Tubing

2.1.4.1 Electrical, Zinc-Coated Steel Metallic Tubing (EMT)

UL 797.

2.1.4.2 Electrical Nonmetallic Tubing (ENT)

NEMA TC 13.

2.1.4.3 Flexible Conduit, Steel and Plastic

General-purpose type, UL 1; liquid tight, UL 360, and UL 1660

2.1.4.4 Intermediate Metal Conduit

UL 1242.

2.1.4.5 PVC Coated Rigid Steel Conduit

NEMA RN 1.

2.1.4.6 Rigid Metal Conduit

UL 6.

2.1.5 Conduit and Device Boxes and Fittings

2.1.5.1 Boxes, Metallic Outlet

NEMA OS 1 and UL 514A.

2.1.5.2 Fittings for Conduit and Outlet Boxes

UL 514B.

2.1.6 Conduit Coatings Plastic Resin System

FS L-C-530 or NEMA RN 1, Type A-40.

2.1.7 Connectors, Wire Pressure

2.1.7.1 Copper Conductors

UL 486A.

2.1.8 Electrical Grounding and Bonding Equipment

UL 467.

2.1.8.1 Ground Rods

Ground rods shall be of copper-clad steel conforming to UL 467 not less than 3/4 inch in diameter by 10 feet in length of the sectional type driven full length into the earth.

2.1.8.2 Ground Bus

The ground bus shall be bare conductor or flat copper in one piece, if practicable.

2.1.9 Enclosures

NEMA ICS 6 or NEMA 250, unless otherwise specified.

2.1.9.1 Cabinets and Boxes, Volume Greater Than 100 Cubic Inches

UL 50, hot-dip, zinc-coated, if sheet steel.

2.1.9.2 Circuit Breaker

UL 489.

2.1.10 Fixtures, Lighting and Fixture Accessories/Components

Standard Drawing 40-06-04 sheets referenced hereinafter and enclosed as an integral part of these specifications, additional fixtures shown on contract drawings. Fixtures, accessories and components, including ballasts, lampholders, lamps, starters and starter holders, shall conform to industry standards specified below.

2.1.10.1 Fixture, Auxiliary or Emergency

UL 924.

2.1.10.2 Incandescent Fixture

NEMA LE 4 for ceiling compatibility of recessed fixtures and UL 1571.

2.1.10.3 Fluorescent

a. Fixture: NEMA LE 4 for ceiling compatibility of recessed fixtures and UL 1570. Fixtures shall be plainly marked for proper lamp and ballast type to identify lamp diameter, wattage, color and start type. Marking shall be readily visible to service personnel, but not visible from normal viewing angles.

b. Ballasts:

(1) Electronic Ballast. Electronic ballasts shall consist of a rectifier, high frequency inverter, and power control and regulation circuitry. The ballasts shall be UL listed, Class P, with a Class A sound rating and shall contain no PCBs. Ballasts shall meet 47 CFR 18 for electromagnetic interference and shall not interfere with the operation of other electrical equipment. Design shall withstand line transients per IEEE C62.41, Category A. Unless otherwise indicated, the minimum number of ballasts shall be used to serve each individual fixture, using one, two, three or four lamp ballasts. A single ballast may be used to serve multiple fixtures if they are continuous mounted, factory manufactured for that installation with an integral wireway and are identically controlled.

(a) Light output regulation shall be +/- 10%.
(b) Voltage input regulation shall be +/- 10%.
(c) Lamp current crest factor shall be no more than 1.7.
(d) Ballast factor shall be not less than 85% nor more than 100%, unless otherwise indicated.
(e) A 60 Hz filter shall be provided. Flicker shall be no more than

15% with any lamp suitable for the ballast.

(f) Ballast case temperature shall not exceed 25 degree celsius rise above 40 degree celsius ambient, when tested in accordance with UL 935.

(g) Input current third harmonic shall not exceed 32 percent total harmonic distortion or 27.5 percent of the third triplens.

(h) Power factor shall not be less than 0.9.

(i) Ballasts shall operate at a frequency of 20 KHz or more.

(j) Operating filament voltage shall be 2.5 to 4.5 volts.

(k) Warranty. Three year full warranty including a $10 labor allowance.

(l) Ballast Efficacy Factor (BEF) shall be in accordance with the following table. Ballasts and lamps shall be matching rapid start or instant start as indicated on the following table. If 32W-F32-T8 lamps and ballasts are used, they must be either all rapid start or all instant start.

ELECTRONIC FLUORESCENT BALLAST EFFICACY FACTORS

LAMP TYPE	TYPE OF STARTER & LAMP	NOMINAL OPERATIONAL INPUT VOLTAGE	NUMBER OF LAMPS	MIN. BALLAST EFFICACY FACTOR
40W F40 T12	rapid start	120 or 277 V	1	2.3
			2	1.2
			3	0.8
			4	0.6
34W F40 T12	rapid start	120 or 277 V	1	2.6
			2	1.3
			3	1.0
			4	0.7
40W F40 T10	rapid start	120 or 277 V	1	2.2
			2	1.1
			3	0.8
32W F32 T8	rapid or instant start	120 or 277 V	1	2.4
			2	1.4
			3	1.0
			4	0.8

*For ballasts not specifically designed for use with dimming controls

The BEF is calculated using the formula:

BEF = Ballast Factor (in percent) / Power Input

Where Power Input = Total Wattage of Combined Lamps and Ballasts.

c. Lampholders, Starters, and Starter Holders: UL 542.

2.1.10.4 High-Intensity-Discharge

a. Fixture: NEMA LE 4 for ceiling compatibility of recessed fixtures

and UL 1572.

b. Ballasts: ANSI C82.4 for multiple supply types and UL 1029.

2.1.11 Fuses and Fuseholders

2.1.11.1 Fuses, Low Voltage Cartridge Type

NEMA FU 1.

2.1.11.2 Fuses, Class R

UL 198E.

2.1.11.3 Fuseholders

UL 512.

2.1.12 Instruments, Electrical Indicating

ANSI C39.1.

2.1.13 Motors, ac, Fractional and Integral

Motors, ac, fractional and integral horsepower, 500 hp and smaller shall conform to NEMA MG 1 and UL 1004 for motors; NEMA MG 10 for energy management selection of polyphase motors.

2.1.13.1 Rating

The horsepower rating of motors should be limited to no more than 125 percent of the maximum load being served unless a NEMA standard size does not fall within this range. In this case, the next larger NEMA standard motor size should be used.

2.1.13.2 Motor Efficiencies

All permanently wired polyphase motors of 1 hp or more shall meet the minimum full-load efficiencies as indicated in the following table, and as specified in this specification. Motors of 1 hp or more with open, dripproof or totally enclosed fan cooled enclosures shall be high efficiency type, unless otherwise indicated. Motors provided as an integral part of motor driven equipment are excluded from this requirement if a minimum seasonal or overall efficiency requirement is indicated for that equipment by the provisions of another section.

Minimum Motor Efficiencies

HP	Std. Efficiency	High Efficiency
1	77.0	85.5
1.5	78.5	85.5
2	78.5	85.5
3	78.5	88.5
5	82.5	88.5

Minimum Motor Efficiencies

HP	Std. Efficiency	High Efficiency
7.5	84.0	90.0
10	85.5	90.0
15	85.5	91.0
20	87.5	92.0
25	88.5	92.0
30	88.5	92.0
40	88.5	92.0
50	89.0	92.5
60	89.0	92.5
75	89.0	95.5
100	90.0	93.5
125	91.0	94.5
150	91.0	94.5
200	91.0	94.5
250	91.0	94.5
300	91.0	94.5
350	91.0	94.5
400	91.0	94.5
500	91.0	94.5

2.1.14 Motor Controls and Motor Control Centers

NEMA ICS 1, NEMA ICS 2, NEMA ICS 3 and NEMA ICS 6, and UL 508 and UL 845.

2.1.15 Panelboards

Dead-front construction, NEMA PB 1 and UL 67.

2.1.16 Receptacles

2.1.16.1 Hospital Grade

UL 498.

2.1.16.2 General Grade

NEMA WD 1.

2.1.16.3 Ground Fault Interrupters

UL 943, Class A or B.

2.1.16.4 Hospital Grade Tamper Resistant

UL 498.

2.1.17 Service Equipment

UL 869A.

2.1.18 Splice, Conductor

UL 486C.

2.1.19 Switchboard, Dead Front Distribution

NEMA PB 2 and UL 891.

2.1.20 Switchgear Assemblies, Power

IEEE C37.20.1.

2.1.21 Snap Switches

UL 20.

2.1.22 Tapes

2.1.22.1 Plastic Tape

UL 510.

2.1.22.2 Rubber Tape

UL 510.

2.1.23 Transformers

2.1.23.1 Conventional Dry-Type

IEEE C57.12.01, ANSI C57.12.10, IEEE C57.12.80, IEEE C57.12.91, IEEE C57.94, IEEE C57.98, IEEE C57.105 and UL 1561 in addition to the specific standards referenced below.

a. Specialty or General Applications: NEMA ST 20 and UL 506 unless otherwise shown or specified.

b. Instrument: ANSI C12.11 and IEEE C57.13 with current ratio or voltage ratings shown or specified.

2.1.24 Wiring Devices

NEMA WD 1 for general-purpose wiring devices, and NEMA WD 6 for dimensional requirements of wiring devices.

2.1.25 Transient Voltage Surge Suppressors (TVSS)

IEEE C62.41, ANSI C62.11, ANSI C62.45, and UL 1449.

PART 3 EXECUTION

3.1 GROUNDING

Grounding shall be in conformance with NFPA 70, the contract drawings, and the following specifications.

3.1.1 Ground Rods

The resistance to ground shall be measured using the fall-of-potential method described in IEEE Std 81. The maximum resistance of a driven ground shall not exceed 25 ohms under normally dry conditions. If this resistance cannot be obtained with a single rod, additional rods not less than 6 feet on centers. In high-ground-resistance, UL listed chemically charged ground rods may be used. If the resultant resistance exceeds 25 ohms measured not

less than 48 hours after rainfall, the Contracting Officer shall be notified immediately. Connections below grade shall be fusion welded. Connections above grade shall be fusion welded or shall use UL 467 approved connectors.

3.1.2 Ground Bus

Ground bus shall be provided in the communication rooms as indicated. Noncurrent-carrying metal parts of transformer neutrals and other electrical equipment shall be effectively grounded by bonding to the bus. The ground bus shall be bonded to both the entrance ground, and to a ground rod or rods as specified above having the upper ends terminating approximately 4 inches above the floor. Connections and splices shall be of the brazed, welded, bolted, or pressure-connector type, except that pressure connectors or bolted connections shall be used for connections to removable equipment.

3.1.3 Grounding Conductors

A green ground wire shall be furnished regardless of the type of conduit. All equipment grounding conductors, including metallic raceway systems used as such, shall be bonded or joined together in each wiring box or equipment enclosure. Metallic raceways and grounding conductors shall be checked to assure that they are wired or bonded into a common junction. Metallic boxes and enclosures, if used, shall also be bonded to these grounding conductors by an approved means per NFPA 70. When boxes for receptacles, switches, or other utilization devices are installed, any designated grounding terminal on these devices shall also be bonded to the equipment grounding conductor junction with a short jumper.

3.2 WIRING METHODS

3.2.1 General Requirements

Unless otherwise indicated, wiring shall consist of insulated conductors installed in rigid zinc-coated steel conduit, electrical metallic tubing.

3.2.2 Conduit and Tubing Systems

Conduit and tubing systems shall be installed as indicated. Conduit sizes shown are based on use of copper conductors with insulation types as described in paragraph WIRING METHODS. Minimum size of raceways shall be 1/2 inch. Electrical metallic tubing may be installed only within buildings. Electrical metallic tubing may be installed in concrete and grout in dry locations. Electrical metallic tubing installed in concrete or grout shall be provided with concrete tight fittings. EMT shall not be installed in damp or wet locations, or the air space of exterior masonry cavity walls. Bushings, manufactured fittings or boxes providing equivalent means of protection shall be installed on the ends of all conduits and shall be of the insulating type, where required by NFPA 70. Only UL listed adapters shall be used to connect EMT to rigid metal conduit, cast boxes, and conduit bodies. Aluminum conduit may be used only where installed exposed in dry locations. Nonaluminum sleeves shall be used where aluminum conduit passes through concrete floors and firewalls. Penetrations of above grade floor slabs, time-rated partitions and fire walls shall be firestopped in accordance with Section 07270 FIRESTOPPING. Except as otherwise specified, IMC may be used as an option for rigid steel conduit in areas as permitted by NFPA 70. Raceways shall not be installed under the firepits of boilers and furnaces and shall be kept 6 inches away

from parallel runs of flues, steam pipes and hot-water pipes. Raceways shall be concealed within finished walls, ceilings, and floors unless otherwise shown. Raceways crossing structural expansion joints shall be provided with suitable expansion fittings or other suitable means to compensate for the building expansion and contraction and to provide for continuity of grounding. Wiring installed in underfloor duct system underfloor raceway system shall be suitable for installation in wet locations.

3.2.2.1 Below Slab-on-Grade or in the Ground

Electrical wiring below slab-on-grade shall be protected by a conduit system. Conduit passing vertically through slabs-on-grade shall be rigid steel or IMC. Rigid steel or IMC conduits installed below slab-on-grade or in the earth shall be field wrapped with 0.010 inch thick pipe-wrapping plastic tape applied with a 50 percent overlay, or shall have a factory-applied polyvinyl chloride, plastic resin, or epoxy coating system.

3.2.2.2 Installing in Slabs Including Slabs on Grade

Conduits shall be installed as close to the middle of concrete slabs as practicable without disturbing the reinforcement. Outside diameter shall not exceed 1/3 of the slab thickness and conduits shall be spaced not closer than 3 diameters on centers except at cabinet locations where the slab thickness shall be increased as approved by the Contracting Officer.

3.2.2.3 Changes in Direction of Runs

Changes in direction of runs shall be made with symmetrical bends or cast-metal fittings. Field-made bends and offsets shall be made with an approved hickey or conduit-bending machine. Crushed or deformed raceways shall not be installed. Trapped raceways in damp and wet locations shall be avoided where possible. Care shall be taken to prevent the lodgment of plaster, dirt, or trash in raceways, boxes, fittings and equipment during the course of construction. Clogged raceways shall be entirely freed of obstructions or shall be replaced.

3.2.2.4 Supports

Metallic conduits and tubing shall be securely and rigidly fastened in place at intervals of not more than 10 feet and within 3 feet of boxes, cabinets, and fittings, with approved pipe straps, wall brackets, conduit clamps, conduit hangers, threaded C-clamps, or ceiling trapeze. C-clamps or beam clamps shall have strap or rod-type retainers. Rigid plastic conduits (if permitted as a wiring method) shall be supported as indicated above, except that they will be supported at intervals as indicated in NFPA 70. Loads and supports shall be coordinated with supporting structure to prevent damage or deformation to the structures, but no load shall be applied to joist bridging. Fastenings shall be by wood screws or screw-type nails to wood; by toggle bolts on hollow masonry units; by expansion bolts on concrete or brick; by machine screws, welded threaded studs, heat-treated or spring-steel-tension clamps on steel work. Nail-type nylon anchors or threaded studs driven in by a powder charge and provided with lock washers and nuts may be used in lieu of expansion bolts or machine screws. Raceways or pipe straps shall not be welded to steel structures. Holes cut to a depth of more than 1-1/2 inches in reinforced concrete beams or to a depth of more than 3/4 inch in concrete joists shall avoid cutting the main reinforcing bars. Holes not used shall be filled. In partitions of light steel construction, sheet-metal screws may

be used. Conduit or tubing shall not be supported using wire or nylon ties. Raceways shall be installed as a complete system and be independently supported from the structure. Upper raceways shall not be the support of lower raceways. Supporting means will not be shared between electrical raceways and mechanical piping or ducts and shall not be fastened to hung ceiling supports. Conduits shall be fastened to all sheet-metal boxes and cabinets with two locknuts where required by the NFPA 70, where insulating bushings are used, and where bushings cannot be brought into firm contact with the box; otherwise, a single locknut and bushing may be used. Threadless fittings for electrical metallic tubing shall be of a type approved for the conditions encountered. A pull wire shall be inserted in each empty raceway in which wiring is to be installed by others if the raceway is more than 50 feet in length and contains more than the equivalent of two 90-degree bends, or where the raceway is more than 150 feet in length. The pull wire shall be of No. 14 AWG zinc-coated steel, or of plastic having not less than 200 pound per square inch tensile strength. Not less than 10 inches of slack shall be left at each end of the pull wire. Additional support for horizontal runs is not required when EMT rests on steel stud cutouts.

3.2.2.5 Communications Raceways

Communications raceways indicated shall be installed in accordance with the previous requirements for conduit and tubing and with the additional requirements that no length of run shall exceed 50 feet for 1/2 inch and 3/4 inch sizes, and 100 feet for 1 inch or larger sizes, and shall not contain more than two 90-degree bends or the equivalent. Additional pull or junction boxes shall be installed to comply with these limitations whether or not indicated. Inside radii of bends in conduits of 1 inch size or larger shall be not less than ten times the nominal diameter.

3.2.3 Cable Trays

Cable trays shall be supported in accordance with the recommendations of the manufacturer but at no more than 6 foot intervals. Contact surfaces of aluminum connections shall be coated with an antioxidant compound prior to assembly. Adjacent cable tray sections shall be bonded together by connector plates of an identical type as the cable tray sections. The Contractor shall submit the manufacturer's certification that the cable tray system meets all requirements of Article 318 of NFPA 70. The cable tray shall be installed and grounded in accordance with the provisions of Article 318 of NFPA 70. Data submitted by the Contractor shall demonstrate that the completed cable tray systems will comply with the specified requirements. Cable trays shall terminate 10 inches from both sides of smoke and fire partitions. Conductors run through smoke and fire partitions shall be installed in 4 inch rigid steel conduits with grounding bushings, extending 12 inches beyond each side of the partitions. The installation shall be sealed to preserve the smoke and fire rating of the partitions. Penetrations shall be firestopped in accordance with Section 07270 FIRESTOPPING.

3.2.4 Cables and Conductors

Aluminum conductors shall have ampacity of not less than the copper conductors. Wire connectors of insulating material or solderless pressure connectors properly taped shall be utilized for all splices. Pressure connectors for aluminum conductors shall have tinned aluminum bodies. Aluminum contact surfaces of conductors and connectors shall be cleaned and covered with antioxidant compound prior to making of connections.

3.2.4.1 Sizes

All sizes are based on copper conductors, unless otherwise indicated. Sizes shall be not less than indicated. Branch-circuit conductors shall be not smaller than No. 12 AWG. Conductors for branch circuits of 120 volts more than 100 feet long and of 277 volts more than 230 feet long, from panel to load center, shall be no smaller than No. 10 AWG. Class 1 remote control and signal circuit conductors shall be not less than No. 14 AWG. Class 2 remote control and signal circuit conductors shall be not less than No. 16 AWG.

The conductor sizes are based on the use of TW insulation for conductors smaller than No. 1/0 AWG and THW insulation for conductors No. 1/0 and larger, except where otherwise indicated.

Higher temperature rated conductors will be permitted to be used, if the UL tested temperature ratings for which the equipment in the circuit is marked are not exceeded.

Conductor sizes for nonlinear loads shall be based on the use of minimum 75 degrees C insulated conductors for branch circuits and feeders.

3.2.4.2 Power Conductor Identification

Phase conductors shall be identified by color coding. The color of the insulation on phases A, B, and C respectively (for three phase) or phases A and B respectively (for single phase) of different voltage systems shall be as follows:

120/208 volt, 3-phase: Black, red, and blue.

277/480 volt, 3-phase: Brown, orange, and yellow.

120/240 volt, single/phase: Black and red.

Conductor phase and voltage identification shall be made by color-coded insulation for all conductors smaller than No. 6 AWG. For conductors No. 6 AWG and larger, identification shall be made by color-coded insulation, or conductors with black insulation may be furnished and identified by the use of half-lapped bands of colored electrical tape wrapped around the insulation for a minimum of 3 inches of length near the end, or other method as submitted by the Contractor and approved by the Contracting Officer. Conductor identification shall be provided within each enclosure where a tap, splice, or termination is made. Phase identification by a particular color shall be maintained continuously for the length of a circuit, including junctions.

3.2.4.3 Control Conductor Identification

Control circuit conductor identification shall be made by color-coded insulated conductors, plastic-coated self-sticking printed markers, permanently attached stamped metal foil markers, or equivalent means as approved. Control circuit terminals of equipment shall be properly identified. Terminal and conductor identification shall match that shown on approved detail drawings. Hand lettering or marking is not acceptable.

3.3 BOXES AND SUPPORTS

Boxes shall be provided in the wiring or raceway systems wherever required for pulling of wires, making connections, and mounting of devices or fixtures. Boxes for metallic raceways, 4 by 4 inch nominal size and smaller, shall be of the cast-metal hub type when located in normally wet locations, when flush and surface mounted on outside of exterior surfaces. Large size boxes shall be NEMA 1 or as shown. Boxes in other locations shall be sheet steel. In partitions of light steel construction bar hangers with 1 inch long studs, mounted between metal wall studs or metal stud "C" brackets snapped on and tab-locked to metal wall studs, shall be used to secure boxes to the building structure. When "C" brackets are used, additional box support shall be provided on the side of the box opposite the brackets. The edges of boxes for electrical devices shall be flush with the finished surfaces in gypsum and plasterboard installations. Boxes for mounting lighting fixtures shall be not less than 4 inches square except smaller boxes may be installed as required by fixture configuration, as approved. Boxes installed for concealed wiring shall be provided with suitable extension rings or plaster covers, as required. The bottom of boxes installed in masonry-block walls for concealed wiring shall be flush with the top of a block to minimize cutting of blocks, and boxes shall be located horizontally to avoid cutting webs of block. Indicated elevations are approximate. Unless otherwise indicated, boxes for wall switches shall be mounted 48 inches above finished floors. Switch and outlet boxes on opposite sides of fire rated walls shall be separated by a minimum horizontal distance of 24 inches. Cast-metal boxes installed in wet locations and boxes installed flush with the outside of exterior surfaces shall be gasketed. Separate boxes shall be provided for flush or recessed fixtures when required by the fixture terminal operating temperature, and fixtures shall be readily removable for access to the boxes unless ceiling access panels are provided. Boxes and supports shall be fastened to wood with wood screws or screw-type nails of equal holding strength, with bolts and metal expansion shields on concrete or brick, with toggle bolts on hollow masonry units, and with machine screws or welded studs on steel work. Threaded studs driven in by powder charge and provided with lockwashers and nuts, or nail-type nylon anchors may be used in lieu of expansion shields, or machine screws. In open overhead spaces, cast-metal boxes threaded to raceways need not be separately supported except where used for fixture support; cast-metal boxes having threadless connectors and sheet metal boxes shall be supported directly from the building structure or by bar hangers. Hangers shall not be fastened to or supported from joist bridging. Cast-metal boxes with 3/32 inch wall thickness are acceptable. Where bar hangers are used, the bar shall be attached to raceways on opposite sides of the box and the raceway shall be supported with an approved type fastener not more than 24 inches from the box. Penetration of more than 1-1/2 inches into reinforced-concrete beams or more than 3/4 inch into reinforced-concrete joists shall avoid cutting any main reinforcing steel.

3.3.1 Boxes for Use with Raceway Systems

Boxes for use with raceway systems shall be not less than 1-1/2 inches deep except where shallower boxes required by structural conditions are approved. Sheetmetal boxes for other than lighting fixtures shall be not less than 4 inches square except that 4 by 2 inch boxes may be used where only one raceway enters the outlet. Contractor shall size the telephone outlet boxes as required by the number, size and type of outlets specified and as required by the outlets furnished by the Contractor.

3.3.2 Pull Boxes

Pull boxes of not less than the minimum size required by NFPA 70 shall be constructed of aluminum or galvanized sheet steel, except where cast-metal boxes are required in locations specified above. Boxes shall be furnished with screw-fastened covers. Where several feeders pass through a common pull box, the feeders shall be tagged to indicate clearly the electrical characteristics, circuit number, and panel designation.

3.3.3 Conduit Stub-Ups

Conduits stubbed up through concrete floors for connections to freestanding equipment shall be provided with a short elbow and an adjustable top or coupling threaded inside for plugs, set flush with the finished floor. Wiring shall be extended in rigid threaded conduit to equipment, except that where required, flexible conduit may be used 6 inches above the floor. Screwdriver-operated threaded flush plugs shall be installed in conduits from which no equipment connections are made to suit the devices installed.

3.4 DEVICE PLATES

One-piece type device plates shall be provided for all outlets and fittings. Plates on unfinished walls and on fittings shall be of zinc-coated sheet steel, cast-metal, or impact resistant plastic having rounded or beveled edges. Plates on finished walls shall be of satin finish corrosion resistant steel. Screws shall be of metal with countersunk heads, in a color to match the finish of the plate. Plates shall be installed with all four edges in continuous contact with finished wall surfaces without the use of mats or similar devices. Plaster fillings will not be permitted. Plates shall be installed with an alignment tolerance of 1/16 inch. The use of sectional-type device plates will not be permitted. Plates installed in wet locations shall be gasketed and provided with a hinged, gasketed cover, unless otherwise specified.

3.5 RECEPTACLES

3.5.1 Single and Duplex

Single and duplex receptacles shall be rated 20 amperes, 125 volts, two-pole, three-wire, grounding type with polarized parallel slots. Bodies shall be of brown or ivory to match color of switch handles in the same room or to harmonize with the color of the respective wall, and supported by mounting strap having plaster ears. Contact arrangement shall be such that contact is made on two sides of an inserted blade. Receptacle shall be side- or back-wired with two screws per terminal. The third grounding pole shall be connected to the metal mounting yoke. Switched receptacles shall be the same as other receptacles specified except that the ungrounded pole of each suitable receptacle shall be provided with a separate terminal. Only the top receptacle of a duplex receptacle shall be wired for switching application. Receptacles with ground fault circuit interrupters shall have the current rating as indicated, and shall be UL Class A type unless otherwise shown. Ground fault circuit protection shall be provided as required by NFPA 70 and as indicated on the drawings.

3.5.2 Weatherproof Applications

Weatherproof receptacles shall be suitable for the environment, damp or wet as applicable, and the housings shall be labeled to identify the allowable use. Receptacles shall be marked in accordance with UL 514A for the type of use indicated; "Damp locations", "Wet Locations", "Wet Location Only

When Cover Closed". Assemblies shall be installed in accordance with the manufacturer's recommendations.

3.5.2.1 Damp Locations

Receptacles in damp locations shall be mounted in an outlet box with a gasketed, weatherproof, cast-metal cover plate (device plate, box cover) and a gasketed cap (hood, receptacle cover) over each receptacle opening. The cap shall be either a screw-on type permanently attached to the cover plate by a short length of bead chain or shall be a flap type attached to the cover with a spring loaded hinge.

3.5.2.2 Wet Locations

Receptacles in wet locations must be installed in an assembly rated for such use whether the plug is inserted or withdrawn, unless otherwise indicated. In a duplex installation, the receptacle cover shall be configured to shield the connections whether one or both receptacles are in use.

3.5.2.3 Waiting Areas

Receptacles in waiting areas shall be tamper resistant.

3.6 WALL SWITCHES

Wall switches shall be of the totally enclosed tumbler type. The wall switch handle and switch plate color shall harmonize with the color of the respective wall. Wiring terminals shall be of the screw type or of the solderless pressure type having suitable conductor-release arrangement. Not more than one switch shall be installed in a single-gang position. Switches shall be rated 20-ampere 277-volt for use on alternating current only. Dimming switches shall be solid-state flush mounted, sized for the loads.

3.7 SERVICE EQUIPMENT

Service-disconnecting means shall be of the enclosed molded-case circuit breaker type as indicated with external handle for manual operation. When service disconnecting means is a part of an assembly, the assembly shall be listed as suitable for service entrance equipment. Enclosures shall be sheet metal with hinged cover for surface mounting unless otherwise indicated.

3.8 PANELBOARDS

Circuit breakers and switches used as a motor disconnecting means, and not in sight of the motor and the driven machinery location, shall be capable of being locked in the open position. Door locks shall be keyed alike. Nameplates shall be as approved. Directories shall be typed to indicate loads served by each circuit and mounted in a holder behind a clear protective covering. Busses shall be copper or aluminum.

3.8.1 Panelboards

Panelboards shall be circuit breaker equipped as indicated on the drawings.

3.9 FUSES

Equipment provided under this contract shall be provided with a complete set of properly rated fuses when the equipment manufacturer utilize fuses in the manufacture of the equipment, or if current-limiting fuses are required to be installed to limit the ampere-interrupting capacity of circuit breakers or equipment to less than the maximum available fault current at the location of the equipment to be installed. Fuses shall have a voltage rating of not less than the phase-to-phase circuit voltage, and shall have the time-current characteristics required for effective power system coordination.

3.9.1 Cartridge Fuses; Noncurrent-Limiting Type

Cartridge fuses of the noncurrent-limiting type shall be Class H, nonrenewable, dual element, time lag type and shall have interrupting capacity of 10,000 amperes. At 500 percent current, cartridge fuses shall not blow in less than 10 seconds. Cartridge fuses shall be used for circuits rated in excess of 30 amperes, 125 volts, except where current-limiting fuses are indicated.

3.10 UNDERGROUND SERVICE

Unless otherwise indicated, interior conduit systems shall be stubbed out 5 feet beyond the building wall and 3 feet below finished grade, for interface with the exterior service lateral conduits and exterior communications conduits. Outside conduit ends shall be bushed and capped, or plugged until connected to exterior conduit systems. Underground service lateral conductors will be extended to building service entrance and terminated in accordance with the requirements of Section 16375 ELECTRICAL DISTRIBUTION SYSTEM, UNDERGROUND and NFPA 70.

3.11 MOTORS

Motors shall be as specified in paragraph Motors, ac, Fractional and Integral Horsepower, whether or not motors are separately provided or included in equipment assemblies specified in other sections of these specifications. Each motor shall conform to the hp and voltage ratings indicated, and shall have a service factor and other characteristics that are essential to the proper application and performance of the motors under conditions shown or specified. Three-phase motors for use on 3-phase 208-volt systems shall have a nameplate rating of 200 volts. Unless otherwise specified, all motors shall have open frames, and continuous-duty classification based on a 40 degree C ambient temperature reference. Polyphase motors shall be squirrel-cage type, having normal-starting-torque and low-starting-current characteristics, unless other characteristics are specified in other sections of these specifications or shown on contract drawings. The Contractor shall be responsible for selecting the actual horsepower ratings and other motor requirements necessary for the applications indicated. When electrically driven equipment furnished under other sections of these specifications materially differs from the design, the Contractor shall make the necessary adjustments to the wiring, disconnect devices and branch-circuit protection to accommodate the equipment actually installed.

3.12 MOTOR CONTROL

Each motor or group of motors requiring a single control shall be provided under other sections of these specifications with a suitable controller and devices that will perform the functions as specified for the respective motors. Each motor of 1/8 hp or larger shall be provided with

thermal-overload protection. Polyphase motors shall have overload protection in each ungrounded conductor. The overload-protection device shall be provided either integral with the motor or controller, or shall be mounted in a separate enclosure. Unless otherwise specified, the protective device shall be of the manually reset type. Single or double pole tumbler switches specifically designed for alternating-current operation only may be used as manual controllers for single-phase motors having a current rating not in excess of 80 percent of the switch rating. Automatic control devices such as thermostats, float or pressure switches may control the starting and stopping of motors directly, provided the devices used are designed for that purpose and have an adequate horsepower rating. When the automatic-control device does not have such a rating, a magnetic starter shall be used, with the automatic-control device actuating the pilot-control circuit. When combination manual and automatic control is specified and the automatic-control device operates the motor directly, a double-throw, three-position tumbler or rotary switch shall be provided for the manual control; when the automatic-control device actuates the pilot control circuit of a magnetic starter, the latter shall be provided with a three-position selector switch marked MANUAL-OFF-AUTOMATIC. Connections to the selector switch shall be such that only the normal automatic regulatory control devices will be bypassed when the switch is in the Manual position; all safety control devices, such as low- or high-pressure cutouts, high-temperature cutouts, and motor-overload protective devices, shall be connected in the motor-control circuit in both the Manual and the Automatic positions of the selector switch. Control circuit connections to any MANUAL-OFF-AUTOMATIC switch or to more than one automatic regulatory control device shall be made in accordance with wiring diagram approved by the Contracting Officer unless such diagram is included on the drawings. All controls shall be 120 volts or less unless otherwise indicated.

3.13 MOTOR-DISCONNECT MEANS

Each motor shall be provided with a disconnecting means when required by NFPA 70 even though not indicated. For single-phase motors, a single or double pole toggle switch, rated only for alternating current, will be acceptable for capacities less than 30 amperes, provided the ampere rating of the switch is at least 125 percent of the motor rating. Switches shall disconnect all ungrounded conductors.

3.14 TRANSFORMERS

Only single- and three-phase transformers having two windings per phase will be approved. Full-capacity standard NEMA taps shall be provided in the primary windings of transformers having a primary rating in excess of 600 volts. Three-phase transformers shall be connected only in a delta-wye or wye-delta configuration, as indicated. "T" connections may be used for transformers rated at 15 kVA or below. The insulation on transformer windings may be the manufacturer's standard for transformers rated for operation in a 40-degree Celsius ambient temperature unless a higher-temperature insulation is shown, specified or required by the application indicated. Single kVA ratings shown are based on self-cooled operation. The basic impulse level (BIL) of individual transformers shall be as stated in the following paragraphs. The conventional dry-type transformer. Transformers to be located within the building may be provided in the manufacturer's standard, ventilated indoor enclosure designed for use in a 40-degree Celsius ambient temperature, unless otherwise specified or shown. The average sound level in decibels (dB) of transformers shall not exceed the following dB level for the applicable kVA

rating range listed:

kVA RANGE	dB SOUND LEVEL
1-50	50
51-150	55
151-300	58
301-500	60
501-700	62
701-1000	64
1001-1500	65
1501 & above	70

3.14.1 Conventional Dry-Type Transformers

Transformers having the primary or higher-voltage winding rated at 600 volts or less and a secondary or lower-voltage winding rated at 240 volts or less may be manufacturer's standard ventilated or enclosed, self-cooled type of transformer unless otherwise shown, specified or required for proper and safe application. Transformers shown with primary ratings in excess of 600 volts shall have the NEMA 220 degree C insulation and shall be rated for a temperature rise of 80 degrees C above ambient. Similarly, transformers having primary windings rated at 480 volts or less and a kVA rating of 150 or larger shall have Class H insulation and be suitable for an 80 degree C temperature rise above ambient. The percent voltage impedance for the transformer shown to supply all facility power demands shall be 5.75 as required to limit the available fault current to less than the ampere-interrupting-capacity of the equipment supplied through the power supply transformer shown. These distribution transformers shall have a basic impulse level (BIL) rating not less than the ANSI standard BIL rating for the mineral-oil insulated type of transformer having the same voltage classification or rating as the dry-type of transformer proposed for installation.

3.15 LAMPS AND LIGHTING FIXTURES

Ballasted fixtures shall have ballasts which are compatible with the specific type and rating of lamps indicated and shall comply with the applicable provisions of the publications referenced.

3.15.1 Lamps

Lamps of the type, wattage, and voltage rating indicated shall be delivered to the project in the original cartons and installed in the fixtures just prior to the completion of the project.

3.15.1.1 Incandescent

Incandescent lamps shall be for 125-volt operation unless otherwise indicated.

3.15.1.2 Fluorescent

Fluorescent lamps for electronic ballasts shall be as indicated.

3.15.1.3 High-Intensity-Discharge

High-intensity-discharge lamps shall be the high-pressure sodium type unless otherwise indicated, shown, or approved.

3.15.2 Fixtures

Fixtures shall be as shown and shall conform to the following specifications and shall be as detailed on Standard Drawing No. 40-06-04, Sheet Nos. 17, 20, 36, & 39, which accompany and form a part of this specification for the types indicated. Illustrations shown on these sheets are indicative of the general type desired and are not intended to restrict selection to fixtures of any particular manufacturer. Fixtures of similar designs and equivalent energy efficiency, light distribution and brightness characteristics, and of equal finish and quality will be acceptable if approved. In suspended acoustical ceilings with fluorescent fixtures, the fluorescent emergency light fixtures shall be furnished with self-contained battery packs.

3.15.2.1 Accessories

Accessories such as straps, mounting plates, nipples, or brackets shall be provided for proper installation. Open type fluorescent fixtures with exposed lamps shall have a wire-basket type guard.

3.15.2.2 Suspended Fixtures

Suspended fixtures shall be provided with swivel hangers in order to ensure a plumb installation. Pendants, rods, or chains 4 feet or longer excluding fixture, shall be braced to limit swinging. Bracing shall be 3 directional, 120 degrees apart. Single unit suspended fluorescent fixtures shall have twin-stem hangers. Multiple unit or continuous-row fluorescent units shall have a tubing or stem for wiring at one point, and a tubing or rod suspension provided for each length of chassis including one at each end. Maximum distance between adjacent tubing or stems shall be 10 feet. Rods shall be of not less than 3/16 inch diameter. Flexible raceway shall be installed to each fixture from an overhead junction box. Fixture to fixture wiring installation is allowed only when fixtures are installed end to end in a continuous run.

3.15.2.3 Ceiling Fixtures

Ceiling fixtures shall be coordinated with and suitable for installation in, on, or from the suspended ceiling provided under other sections of these specifications. Installation and support of fixtures shall be in accordance with the NFPA 70 and manufacturer's recommendations. Where seismic requirements are specified herein, fixtures shall be supported as shown or specified. Recessed fixtures shall have adjustable fittings to permit alignment with ceiling panels. Recessed fixtures installed in fire-resistive type of suspended ceiling construction shall have the same fire rating as the ceiling or shall be provided with fireproofing boxes having materials of the same fire rating as the ceiling panels, in conformance with UL-03. Surface-mounted fixtures shall be suitable for fastening to the structural support for ceiling panels.

3.15.2.4 Sockets

Sockets of industrial, strip, and other open type fluorescent fixtures shall be of the type requiring a forced movement along the longitudinal axis of the lamp for insertion and removal of the lamp.

3.16 EQUIPMENT CONNECTIONS

All wiring not furnished and installed under other sections of the specifications for the connection of electrical equipment as indicated on the drawings shall be furnished and installed under this section of the specifications. Connections shall comply with the applicable requirements of paragraph WIRING METHODS. Flexible conduits 6 feet or less in length shall be provided to all electrical equipment subject to periodic removal, vibration, or movement and for all motors. All motors shall be provided with separate grounding conductors. Liquid-tight conduits shall be used in damp or wet locations.

3.16.1 Motors and Motor Control

Control equipment furnished under this section of the specifications, and shown on the drawings, shall be connected under this section of the specifications unless shown or specified otherwise. Except as otherwise specifically noted, automatic-control wiring, signaling, and protective devices are not included in this section of the specifications, but shall be furnished and installed under other sections of the specifications. Control wiring not shown on the drawings shall be furnished under the other sections of the specifications.

3.16.2 Installation of Government-Furnished Equipment

Wiring shall be extended to the equipment, and proper connections made thereto.

3.17 PAINTING AND FINISHING

Field-applied paint on exposed surfaces shall be provided under Section 09900 PAINTING, GENERAL.

3.18 REPAIR OF EXISTING WORK

The work shall be carefully laid out in advance, and where cutting, channeling, chasing, or drilling of floors, walls, partitions, ceiling, or other surfaces is necessary for the proper installation, support, or anchorage of the conduit, raceways, or other electrical work, this work shall be carefully done, and any damage to building, piping, or equipment shall be repaired by skilled mechanics of the trades involved, at no additional cost to the Government.

3.19 TESTS

After the interior-wiring-system installation is completed, and at such time as the Contracting Officer may direct, the Contractor shall conduct an operating test for approval. The equipment shall be demonstrated to operate in accordance with the requirements of this specification. Continuity test shall be conducted on the telephone wiring system. The test shall be performed in the presence of the Contracting Officer. The Contractor shall furnish all instruments and personnel required for the tests, and the Government will furnish the necessary electric power. No part of the electrical distribution system shall be energized prior to the resistance testing of that system's ground rods and submission of test results to the Contracting Officer. Test reports shall indicate the location of the rod and the resistance and the soil conditions at the time the test was performed.

3.20 ONE-LINE DIAGRAM

A one-line diagram with main transformer, building disconnect means, and feeder breakers/switches to building panels located at the building disconnect shall be provided. Diagram shall be mounted under glass or shall be plastic laminated. The breaker/switch identification on the diagram shall match nameplate on the installed equipment.

-- End of Section --

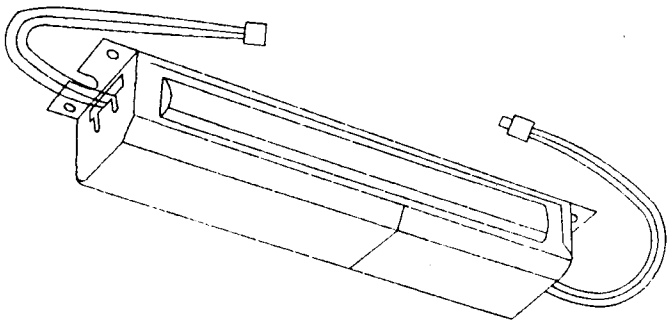

TYPE 200

Emergency Battery and Lamp Supply Unit for Fluorescent Fixtures

The unit shall conform to UL 924 and be UL Listed for field or factory installation. The unit shall be dual-rated for use on either 120 or 277 Volt lighting circuits, and shall meet or exceed NFPA 70 time and voltage requirements. The unit shall be capable of automatically supplying a minimum of 15 percent of the rated lumen output of a standard 4-foot, 40 watt rapid start fluorescent lamp in one minute following the failure of the normal power supply. It shall provide a minimum of 60 percent of the initial emergency illumination at the end of the 90-minute discharge period. The battery charger shall be capable of fully recharging the battery within 24 hours after the return of the normal power supply and, under normal operations, shall trickle charge the battery to maintain it in a fully charged condition. The unit shall be capable of operating at least one of the lamps in the fixture which also houses the unit and shall consist of a high temperature, pocket-plate type of nickel cadmium battery, charger, and electronic circuitry in one compact housing. A conveniently located test switch shall be provided to test the solid-state circuitry and the readiness of the battery. The battery shall be designed to require no maintenance during the expected life, be warranted for not less than three years from the date of the purchase of the unit, and be field replaceable without requiring removal of other components of the unit. Other components of the unit shall be fully warranted for not less than 18 months from the date of purchase of the unit.

The Emergency Battery and Lamp Supply Unit indicated on this sheet shall be provided as indicated on other sheets, and shall also conform to requirements specified or indicated in the contract documents.

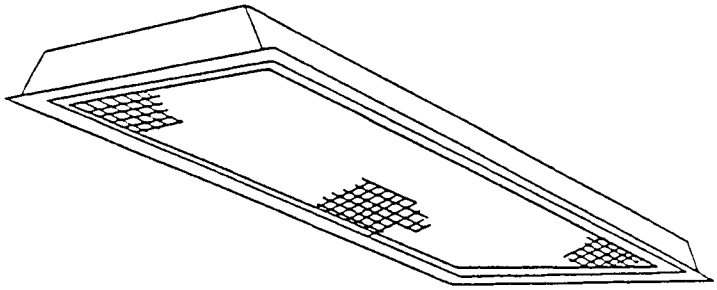

TYPE 206
Static Troffer

TYPE 207
Air Handling Troffer

Recessed Fluorescent Fixture, 2-foot by 4-foot

First Suffix	Second Suffix	Third Suffix	Description
A			Two lamps
B			Three lamps
C			Four lamps
	1		Prismatic acrylic lens
	2		1/2- by 1/2- by 1/2-inch cube louver
	3		1/2- by 1/2- by 1/2-inch polystyrene cube louver
		A	Type 200 emergency unit

Fixture shall conform to UL 1570. Housing shall be complete with integral side trim flanges. Housing and trim flanges shall be cold-rolled steel. The lens or louver shall be installed in a manner that will prevent it from coming loose due to vibration. The ballasts and wiring shall be enclosed in a wireway that is continuous throughout the length of the fixture and which forms a wireway for circuits through the fixture. All metal parts shall receive a rust inhibitive coating before application of the finish coat. The finish coat shall be baked enamel. Lenses and acrylic cube louvers shall be 100 percent virgin acrylic plastic. The lens or louver shall be four feet in length. Acrylic lens shall be flat, 0.125 inch nominal thickness, low brightness, with smooth top surface and a lower surface having a regular array of prismatic elements. Two-lamp ballasts shall be used for individually mounted two-lamp fixtures. Standard ballast(s) shall be the Class P, high power factor type which has been approved for the application by the Certified Ballast Manufacturers. Fixture shall be prewired.

Fixture types indicated on this sheet shall also conform to requirements specified and indicated in the contract documents.

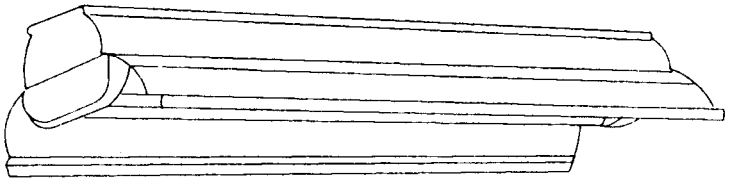

TYPE 230
Suspension Mounted, Industrial,
Open Type Fluorescent Fixture, 4-Foot

First-Suffix	Second-Suffix	Description
A		Two lamps
B		Three lamps
	1	8 to 15 percent uplight
	2	18 to 25 percent uplight

Fixture shall conform to UL 1570. Standard ballast(s) shall be the Class P, high power factor type approved for the application by the Certified Ballast Manufacturers. Channel housing, end fittings, and reflector shall be constructed with die-formed, cold-rolled steel. Reflector finish shall be porcelain enamel, baked white enamel or aluminum oxide. Sockets shall be of the type requiring a forced movement along the longitudinal axis of the lamp for insertion and removal of the lamp. Fixture shall be prewired. Fluoresent tubes shall be protected by a virgin acrylic protective sleeve and clear plastic vented end caps.

Fixture type indicated on this sheet shall also conform to requirements specified and indicated in the contract documents.

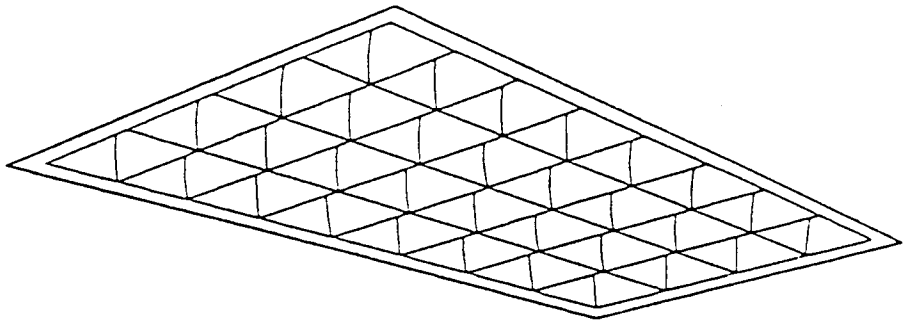

TYPE 234	TYPE 235	TYPE 236
Static Troffer	Air Handling Troffer	Heat Removal/ Transfer Troffer

Recessed Fluorescent Fixture, 2-foot by 4-foot, With Parabolic Louver

First Suffix	Second Suffix	Description
A		Two-lamp, 12-cell louver
B		Three-lamp, 18-cell louver
C		Four-lamp, 32-cell louver
	1	Type 200 emergency unit

Fixture shall conform to UL 1570. Housing, trim flanges if any, shall be die-formed, cold-rolled steel embossed if necessary to ensure structural rigidity. Metal parts to be painted shall receive one or more rust inhibitive coatings before application of the finish coat. Reflective surfaces shall be finished to provide an initial and minimum reflectance of not less than 85 percent. The louver shall be the anodized or semi-specular finished aluminum type consisting of inter- connected cellular baffles not less than three nor more than four inches in depth. The louver shall be hinged on either longitudinal side using die-formed steel hinges, and shall be held securely in place by the hinges and spring-steel latches that are inconspicuous or concealed from view when louver is in place and latches are closed. Securing the louver in place shall prevent light leakage and movement of the louver when subjected to normal vibrations. The ballast(s) and fixture wiring shall be concealed by a snap-in type of metal cover which can be removed and replaced without the use of tools. Standard ballast(s) shall be of the Class P, high power factor type that has been approved by the Certified Ballast Manufacturers for the application. Ballast(s), lampholders, louver and the wireway cover shall be removable and replaceable without removal of the fixture from the ceiling. Fixture shall be prewired.

Fixture type indicated on this sheet shall also conform to requirements specified and indicated in the contract documents.

SECTION TABLE OF CONTENTS

DIVISION 16 - ELECTRICAL

SECTION 16721

FIRE DETECTION AND ALARM SYSTEM

11/91

PART 1 GENERAL

1.1 REFERENCES
1.2 GENERAL REQUIREMENTS
1.2.1 Standard Products
1.2.2 Nameplates
1.2.3 Keys and Locks
1.2.4 Tags
1.2.5 Verification of Dimensions
1.2.6 Compliance
1.2.7 Manufacturer's Services
1.3 SYSTEM DESIGN - ADDITION
1.3.1 Operation
1.3.2 Operational Features
1.3.3 Alarm Functions
1.3.3.1 Alarm Zoning
1.3.4 Supervisory Functions
1.3.5 Primary Power
1.3.6 Battery Backup Power
1.4 SUBMITTALS
1.5 DELIVERY AND STORAGE

PART 2 PRODUCTS

2.1 CONTROL PANEL
2.1.1 Cabinets
2.1.2 Circuit Connections
2.2 STORAGE BATTERIES
2.3 BATTERY CHARGER
2.4 MANUAL FIRE ALARM STATIONS
2.5 FIRE DETECTING DEVICES
2.5.1 Smoke Detectors
2.5.1.1 Photoelectric Smoke Detector
2.5.1.2 Duct Detectors
2.6 NOTIFICATION APPLIANCES
2.6.1 Alarm Bells
2.6.2 Visual Notification Appliances
2.6.3 Combination Audible/Visual Notification Appliances
2.7 FIRE DETECTION AND ALARM SYSTEM PERIPHERAL EQUIPMENT
2.7.1 Ground Rods
2.7.2 Electromagnetic Door Hold-Open Devices
2.7.3 Conduit
2.7.4 Wiring
2.7.5 Special Tools and Spare Parts
2.8 REMOTE STATION EQUIPMENT
2.8.1 Transceiver

2.8.2 Interface Equipment
2.8.3 Antenna
2.8.4 Installation

PART 3 EXECUTION

3.1 INSTALLATION
3.1.1 Power Supply for the System
3.1.2 Wiring
3.1.3 Control Panel
3.1.4 Coordination with Sprinkler Contractor
3.1.5 Notification Appliances
3.2 INSTALLATION OF REMOTE STATION EQUIPMENT
3.2.1 Installation
3.2.2 Ground
3.2.3 Lightning Arrestor
3.2.4 Programming the Transceiver
3.2.5 Accurate Programming
3.2.6 Test Period
3.2.7 Operational Equipment during Test Period
3.2.8 Test Procedures
3.2.9 Interface to Fire Alarm Panel
3.2.10 Procedure to Interface to Fire Alarm Panel
3.2.11 Antenna
3.2.12 Cost of Improperly Located Antenna
3.2.13 Antenna Match to Transceiver
3.3 OVERVOLTAGE AND SURGE PROTECTION
3.4 GROUNDING
3.5 TESTING - CLINIC ADDITION SYSTEM
3.5.1 Preliminary Tests
3.5.2 Acceptance Test
3.6 TRAINING

-- End of Section Table of Contents --

SECTION 16721

FIRE DETECTION AND ALARM SYSTEM
11/91

PART 1 GENERAL

1.1 REFERENCES

The publications listed below form a part of this specification to the extent referenced. The publications are referred to in the text by basic designation only.

AMERICAN NATIONAL STANDARDS INSTITUTE (ANSI)

ANSI C135.30	(1988) Zinc-Coated Ferrous Ground Rods for Overhead or Underground Line Construction

INSTITUTE OF ELECTRICAL AND ELECTRONICS ENGINEERS (IEEE)

IEEE C62.41	(1991) Surge Voltages in Low-Voltage AC Power Circuits

NATIONAL FIRE PROTECTION ASSOCIATION (NFPA)

NFPA 70	(1996) National Electrical Code
NFPA 72	(1993) National Fire Alarm Code
NFPA 90A	(1993) Installation of Air Conditioning and Ventilating Systems

UNDERWRITERS LABORATORIES (UL)

UL 6	(1993) Rigid Metal Conduit
UL 38	(1994; Rev Jan 1994) Manually Actuated Signaling Boxes for Use with Fire-Protective Signaling Systems
UL 228	(1993) Door Closers-Holders, with or without Integral Smoke Detectors
UL 268	(1989; Rev May 1989) Smoke Detectors for Fire Protective Signaling Systems
UL 464	(1990) Audible Signal Appliances
UL 467	(1993) Grounding and Bonding Equipment
UL 521	(1993) Heat Detectors for Fire Protective Signaling Systems
UL 797	(1993) Electrical Metallic Tubing
UL 864	(1991; Rev thru May 1994) Control Units

	for Fire-Protective Signaling Systems
UL 1242	(1983; Rev thru Jul 1993) Intermediate Metal Conduit

1.2 GENERAL REQUIREMENTS

1.2.1 Standard Products

Material and equipment shall be the standard products of a manufacturer regularly engaged in the manufacture of the products and shall be items that have been in satisfactory use for at least 2 years prior to bid opening. Equipment shall be supported by a service organization that can provide service within 24 hours.

1.2.2 Nameplates

Major components of equipment shall have the manufacturer's name, address, type or style, voltage and current rating, and catalog number on a noncorrosive and nonheat-sensitive plate which is securely attached to the equipment.

1.2.3 Keys and Locks

Locks shall be keyed alike as specified herein.

1.2.4 Tags

Tags with stamped identification number shall be furnished for keys and locks.

1.2.5 Verification of Dimensions

The Contractor shall become familiar with all details of the work, verify all dimensions in the field, and shall advise the Contracting Officer of any discrepancy before performing the work.

1.2.6 Compliance

The fire detection and internal alarm system and the central reporting system shall be configured in accordance with NFPA 72. The equipment furnished shall be compatible and be UL listed or FM approved or approved or listed by a nationally recognized testing laboratory in accordance with the applicable NFPA standards.

1.2.7 Manufacturer's Services

Services of a manufacturer's representative who is experienced in the installation, adjustment, testing, and operation of the equipment specified shall be provided. The representative shall supervise the installation, adjustment, and testing of the equipment.

1.3 SYSTEM DESIGN - ADDITION

1.3.1 Operation

The fire alarm and detection system for the Clinic Addition shall be a complete, supervised fire alarm system. This fire alarm system shall be separate and distinct from the fire alarm system serving the existing

hospital building. The system shall be activated into the alarm mode by actuation of any manual fire alarm station or water flow detection device. The system shall remain in the alarm mode until initiating device is reset and the fire alarm control panel is reset and restored to normal. Alarm initiating devices shall be connected to initiating device circuits (IDC), Style D, in accordance with NFPA 72. Alarm indicating appliances shall be connected to notification appliance circuits (NAC), Style X in accordance with NFPA 72. A two-loop conduit system shall be provided so that if any one conduit and all conductors contained in that conduit are severed, all IDC, and NAC on that circuit shall remain functional.

1.3.2 Operational Features

The clinic addition system shall have the following operating features:

a. Electrical supervision of alarm IDC and IAC. Smoke detectors shall have combined alarm initiating and power circuits.

b. Electrical supervision of the primary power (ac) supply, battery voltage, placement of alarm zone module (card, PC board) within the control panel, and transmitter tripping circuit integrity.

c. Trouble buzzer and trouble lamp (light emitting diode or neon light) to activate upon a single break, open, or ground fault condition which prevents the required normal operation of the system. The trouble signal shall also operate upon loss of primary power (ac) supply, low battery voltage, removal of alarm zone module (card, PC board), and disconnection of the circuit used for transmitting alarm signals off-premises. A trouble alarm silence switch shall be provided which will silence the trouble buzzer, but will not extinguish the trouble indicator lamp. After the system returns to normal operating conditions, the trouble buzzer shall again sound until the silencing switch returns to normal position, unless automatic trouble reset is provided.

d. Transmitter disconnect switch to allow testing and maintenance of the system without activating the transmitter but shall provide a trouble signal when disconnected and a restoration signal when reconnected.

e. Evacuation alarm silencing switch or switches which, when activated, will silence alarm devices, but will not affect the zone indicating lamp nor the operation of the transmitter. This switch shall be over-ridden upon activation of a subsequent alarm from an unalarmed zone and the alarm devices will be activated.

f. Electrical supervision of circuits used for supervisory signal services. Supervision shall detect any open, short, or ground.

g. Confirmation or verification modules used on smoke detection initiating circuits. The modules shall interrupt the transmission of an alarm signal to the system control panel for a factory set period. This interruption period shall be adjustable from 1 to 60 seconds and be factory set at 20 seconds. Immediately following the interruption period, a confirmation period shall be in effect during which time an alarm signal if present will be sent immediately to the control panel. All fire alarm devices other than smoke detectors shall be prohibited on circuits controlled by confirmation or verification modules.

h. Zones for alarm IDC shall be as arranged as indicated on the contract drawings.

1.3.3 Alarm Functions

An alarm condition on a circuit shall automatically initiate the following functions:

a. Transmission of signals over the station radio fire reporting system. The signals shall be different for each zone and shall match the building fire alarm sytems zoning.

b. Visual indications of the alarmed zone or zones on the fire alarm control panel annunciator.

c. Continuous sounding of alarm notification appliances throughout the Addition building.

d. Closure of doors held open by electromagnetic devices.

f. Deactivation of the air handling units in the alarmed zone.

1.3.3.1 Alarm Zoning

a. Zone 1 Water flow

b. Zone 2 Sprinkler valve tamper switch

c. Zone 3 PIV tamper switch

d. Zone 4 Manual fire alarm stations

e. Zone 5 Smoke detector

f. Zone 6 Duct smoke detectors (for AHU shutdown)

g. Zone 7 Spare

h. Zone 8 Spare

i. Zone 9 Spare

j. Zone 10 Spare

k. Zone 11 Spare

l. Zone 12 Spare

m. Zone 13 Spare

n. Zone 14 Spare

o. Zone 15 Spare

p. Zone 16 Spare

1.3.4 Supervisory Functions

Closure of any of the valve tamper switches shall initiate a supervisory alarm at the fire alarm panel and shall alos initiate transmission of an appropriate signal over the station radio fire reporting system. These signals shall be zoned as indicated previously.

1.3.5 Primary Power

Operating power shall be provided as required by paragraph Power Supply for the System. Transfer from normal to emergency power or restoration from emergency to normal power shall be fully automatic and not cause transmission of a false alarm. Loss of ac power shall not prevent transmission of a signal via the fire reporting system upon operation of any initiating circuit.

1.3.6 Battery Backup Power

Battery backup power shall be through use of rechargeable, sealed-type storage batteries and battery charger.

1.4 SUBMITTALS

Government approval is required for submittals with a "GA" designation; submittals having an "FI0" designation are for information only. The following shall be submitted in accordance with Section 01300 SUBMITTAL PROCEDURES:

SD-01 Data

Battery; FIO.

Substantiating battery calculations for supervisory and alarm power requirements. Ampere-hour requirements for each system component and each panel component, and the battery recharging period shall be included.

Voltage Drop; FIO.

Voltage drop calculations for signaling appliance circuits to indicate that sufficient voltage is available for proper appliance operation.

Spare Parts; FIO.

Spare parts data for each different item of material and equipment specified, not later than 3 months prior to the date of beneficial occupancy. Data shall include a complete list of parts and supplies with the current unit prices and source of supply and a list of the parts recommended by the manufacturer to be replaced after 1 year of service.

Qualifications; FIO.

Qualifications, with verification of experience and license number, of a Registered Professional Engineer with at least 4 years of current experience in the design of the fire protection and detection systems. This engineer must perform the various specification items required by this section to be performed by a registered Professional Engineer.

SD-04 Drawings

Fire Alarm Reporting System; FIO.

Detail drawings, signed by the Registered Professional Engineer, consisting of a complete list of equipment and material, including manufacturer's descriptive and technical literature, catalog cuts, and installation instructions. Note that the contract drawings show layouts based on typical detectors. The contractor shall check the layout based on the actual detectors to be installed and make any necessary revisions in the detail drawings. The detail drawings shall also contain complete wiring and schematic diagrams for the equipment furnished, equipment layout, and any other details required to demonstrate that the system has been coordinated and will properly function as a unit.

Detailed point-to-point wiring diagram, signed by the Registered Professional Engineer, showing all points of connection. Diagram shall include connections between system devices, appliances, control panels, supervised devices, and all equipment that is activated or controlled by the panel.

SD-06 Instructions

Fire Alarm Reporting System; FIO.

Six copies of operating instructions outlining step-by-step procedures required for system startup, operation, and shutdown. The instructions shall include the manufacturer's name, model number, service manual, parts list, and brief description of all equipment and their basic operating features. Six copies of maintenance instructions listing routine maintenance procedures, possible breakdowns and repairs, and troubleshooting guide. The instructions shall include conduit layout, equipment layout and simplified wiring, and control diagrams of the system as installed. Instructions shall be approved prior to training.

Training; FIO.

Lesson plans and training data, in manual format, for the training courses.

SD-08 Statements

Test Procedures; FIO.

Detailed test procedures, signed by the Registered Professional Engineer, for the fire detection and alarm system 30 days prior to performing system tests.

SD-09 Reports

Testing; FIO.

Test reports in booklet form showing all field tests performed to prove compliance with the specified performance criteria, upon completion and testing of the installed system. Each test report shall document all readings, test results and indicate the final position of controls.

SD-13 Certificates

Equipment; FIO.

Certified copies of current approvals or listings issued by UL, FM or other nationally recognized testing laboratory, showing compliance with specified NFPA standards.

Installer; FIO.

The Contractor shall provide documentation demonstrating that its fire detection and alarm system installer has been regularly engaged in the installation of fire detection and alarm systems meeting NFPA standards for a minimum of three years immediately preceding commencement of this contract. Such documentation shall specifically include proof of satisfactory performance on at least three projects similar to that required by these specifications, including the names and telephone numbers of using agency points of contact for each of these projects. Documentation shall indicate the type of each system installed and include a written certificate that each system has performed satisfactorily in the manner specified for a period of not less than 12 months following completion. All such data shall be submitted 30 days prior to commencement of installation for approval of the Contracting Officer.

Listing of Installer Under "Protective Signaling Services - Local, Auxiliary, Remote Station Propreitary (UUJS)" shall be accepted as equivalent proof of compliance with the foregoing experience requirement.

Completion; FIO.

Contractor shall provide a Certificate of Completion as requried in Section 1-7.2 of NFPA 72.

1.5 DELIVERY AND STORAGE

All equipment delivered and placed in storage shall be stored with protection from the weather, humidity and temperature variation, dirt and dust, and any other contaminants.

PART 2 PRODUCTS

2.1 CONTROL PANEL

Control Panel for the addition shall comply with all the applicable requirements of UL 864. Panel shall be modular, installed in a flush or semi-flush mounted steel cabinet with hinged door and cylinder lock. The cylinder locks shall have a removable Yale core to be compatible with Basewide Keying system. Control panel shall be a clean, uncluttered, and orderly assembled panel containing all components and equipment required to provide the specified operating and supervisory functions of the system. The panel shall have prominent rigid plastic, phenolic or metal identification plates for all lamps, zones, controls, meters, fuses, and switches. Nameplates for fuses shall also include ampere rating. Separate alarm and trouble lamp shall be provided for each zone alarm located on exterior of cabinet door or be visible through the cabinet door. Control panel switches shall be within the locked cabinet. A suitable means shall be provided for testing the control panel visual indicating devices (meters or lamps). Meters and lamps shall be plainly visible when the cabinet door is closed. Signals shall be provided to indicate by zone any alarm, supervisory or trouble condition on the system. Each IDC initiating circuit shall be powered and supervised so that a signal on one zone does not prevent the receipt of signals from other zones. Loss of power, including any or all batteries, shall not require the reloading of a program. Upon restoration of power, startup shall be automatic, and shall not require any manual operation. The loss of primary power or the sequence of applying primary or emergency power shall not affect the

transmission of alarm, supervisory or trouble signals.

2.1.1 Cabinets

Cabinets shall be provided with ample gutter space to allow proper clearance between the cabinet and live parts of the panel equipment. If more than one modular unit is required to form a control panel, the units shall be installed in a single cabinet large enough to accommodate all units. Cabinets shall have manufacturer's standard finish and color.

2.1.2 Circuit Connections

Circuit conductors entering or leaving the panel shall be connected to screw-type terminals with each terminal marked for identification.

2.2 STORAGE BATTERIES

Storage Batteries shall be provided and shall be the sealed, lead-calcium type requiring no additional water. The batteries shall have ample capacity, with primary power disconnected, to operate the fire alarm system for a period of 48 hours. Following this period of operation via batteries, the batteries shall have ample capacity to operate all components of the system, including all alarm signaling devices in the total alarm mode for a minimum period of 15 minutes. Batteries shall be sized to deliver 50 percent more ampere/hours based on a 48 hour discharged rate than required for the calculated capacities. Battery cabinet shall be a separate compartment within the control panel. Batteries in the control panel shall be located at the bottom of the panel. Battery shall be provided with overcurrent protection in accordance with NFPA 72.

2.3 BATTERY CHARGER

Battery charger shall be completely automatic, with high/low charging rate, capable of restoring the batteries from full discharge to full charge within 12 hours. A separate ammeter shall be provided for indicating rate of charge. A separate voltmeter shall be provided to indicate the state of the battery charge. A pilot light indicating when batteries are manually placed on a high rate of charge shall be provided as part of the unit assembly if a high rate switch is provided. Charger shall be located in control panel or battery cabinet.

2.4 MANUAL FIRE ALARM STATIONS

Manual fire alarm stations shall conform to the applicable requirements of UL 38. Manual stations shall be connected into alarm-initiating circuits. Stations shall be installed on semi-flush mounted outlet boxes. Stations shall be single action type. Stations shall be finished in red, with raised letter operating instructions of contrasting color. Stations requiring the breaking of glass or plastic panels for operation are not acceptable. Stations employing glass rods are not acceptable. The use of a key or wrench shall be required to reset the station. Gravity or mercury switches are not acceptable. Switches and contacts shall be rated for the voltage and current upon which they operate. Stations shall have a separate screw terminal for each conductor. Surface mounted boxes shall be painted the same color as the fire alarm manual stations.

2.5 FIRE DETECTING DEVICES

Fire detecting devices shall comply with the applicable requirements of

NFPA 72, NFPA 90A, UL 268, and UL 521. The detectors shall be provided as indicated. Detector base shall have screw terminals for making connections. No solder connections will be allowed. Detectors shall be connected into alarm initiating circuits. Detectors located in concealed locations (above ceiling, etc.) shall have a remote visible indicator lamp. Installed devices shall conform to the classification of the area.

2.5.1 Smoke Detectors

Detectors shall be designed for detection of abnormal smoke densities. Detectors shall contain a visible indicator lamp that shows when the unit is in alarm condition. Detectors shall not be adversely affected by vibration or pressure. Detectors that are in concealed (above false ceilings, etc.) locations shall have a remote visible indicator lamp.

2.5.1.1 Photoelectric Smoke Detector

Detectors shall operate on a light scattering concept using an LED light source. Failure of the LED shall not cause an alarm condition. Detectors shall be factory set for sensitivity and shall require no field adjustments. Detectors shall have an obscuration rating between 1.9 and 2.5 percent per foot when tested in accordance with UL 268. The detectors shall be provided with an auxiliary set of contacts to be used for local release of electromagnetic door hold-open devices.

2.5.1.2 Duct Detectors

Duct detectors are provided under Section 15950 Heating, Ventilation, and Air Conditioning HVAC Control Systems. They shall be connected to the fire alarm panel under this section.

2.6 NOTIFICATION APPLIANCES

Audible appliances shall be heavy duty and conform to the applicable requirements of UL 464. Devices shall be connected into alarm indicating circuits and shall have a separate screw terminal for each conductor. Devices shall have manufacturer's standard finish and color.

2.6.1 Alarm Bells

Bells shall be surface mounted with the matching mounting back box recessed. Bells shall be suitable for use in an electrically supervised circuit. Bells shall be the underdome type producing a minimum output rating of 85 dBA at 10 feet. Bells used in exterior locations shall be specifically listed or approved for outdoor use and be provided with metal housing and protective grilles. Single stroke, electrically operated, supervised, solenoid bells shall be used for coded applications.

2.6.2 Visual Notification Appliances

Visual notification appliances shall have high intensity optic lens and flash tubes. Strobes shall flash at approximately 2 flashes per second and a minimum of 75 candela. Strobe shall be semi-flush mounted.

2.6.3 Combination Audible/Visual Notification Appliances

Combination audible/visual notification appliances shall provide the same requirements as individual units except they shall mount as a unit in standard, manufacturer supplied backboxes. All units shall be factory

assembled. Any other audible indicating appliance employed in the fire alarm systems shall be approved by the authority having jurisdiction. The Contractor has the option of using combination devices where devices are shown on the drawings next to one another.

2.7 FIRE DETECTION AND ALARM SYSTEM PERIPHERAL EQUIPMENT

2.7.1 Ground Rods

Ground rods shall be of copper clad steel conforming to UL 467 or zinc-coated steel conforming to ANSI C135.30 not less than 3/4 inch in diameter by 8 feet in length.

2.7.2 Electromagnetic Door Hold-Open Devices

Devices shall be attached to the walls unless otherwise indicated. Devices shall comply with the appropriate requirements of UL 228. Devices shall operate on power from the fire alarm control panel. Compatible magnetic component shall be attached to the door. Under normal conditions, the magnets shall attract and hold the doors open. When magnets are de-energized, they shall release the doors. Magnets shall have a holding force of approximately 25 pounds. Devices shall be UL or FM approved. Housing for device shall be brushed aluminum. Operation shall be fail safe with no moving parts.

2.7.3 Conduit

Conduit and fittings shall comply with UL 6, UL 1242 and UL 797.

2.7.4 Wiring

Wiring for 120V ac power shall be No. 12 AWG minimum. Wiring for low voltage dc circuits shall be No. 14 AWG minimum. Power wiring (over 28 volts) and control wiring shall be isolated. All wiring shall conform to NFPA 70. System field wiring shall be solid copper and installed in metallic conduit or electrical metallic tubing, except rigid plastic conduit may be used under slab-on-grade. All conductors shall be color coded. Conductors used for the same functions shall be similarly color coded. Wiring code color shall remain uniform throughout the circuit. Pigtail or T-tap connections to alarm initiating, supervisory circuits, and alarm indicating circuits are prohibited.

2.7.5 Special Tools and Spare Parts

Special tools necessary for the maintenance of the equipment shall be furnished. Two spare fuses of each type and size required and five spare lamps and LED's of each type shall be furnished. Two percent of the total number of each different type of detector, but no less than two each, shall be furnished. Fuses and lamps shall be mounted in the fire alarm panel.

2.8 REMOTE STATION EQUIPMENT

2.8.1 Transceiver

Monaco transceiver shall be BT2-4E (16 zones). Transceiver shall operate on a frequency of 138, 925 MHZ. Transceiver shall be provided with but not limited to antenna, weather head, lightning arrestor, power connections, conduit, wire, and other required materials.

2.8.2 Interface Equipment

Interface equipment shall be provided between the fire alarm panel and the remote station equipment. Interface equipment shall be enclosed in a properly UL rated box. The interface equipment shall enable transmission of all required fire alarm panel signals to the base fire department.

2.8.3 Antenna

The most optimum antenna type shall be provided. The antenna shall enable the transceiver to transmit to both Monaco D-500 central stations of the base fire department. Locate antenna (if possible) to provide line-of-site communication between transceiver and Monaco D-500 control station, or located for best transceiver operation.

2.8.4 Installation

Only Monaco manufacturer trained personnel shall install the transceiver and related equipment.

PART 3 EXECUTION

3.1 INSTALLATION

All work shall be installed as shown and in accordance with the manufacturer's diagrams and recommendations, unless otherwise specified. Smoke detectors shall not be installed until the building has been thoroughly cleaned.

3.1.1 Power Supply for the System

A single dedicated circuit connection for supplying power to each building fire alarm system shall be provided. The primary power shall be supplied as shown on the drawings. The power supply shall be equipped with a locking mechanism and marked "FIRE ALARM CIRCUIT CONTROL".

3.1.2 Wiring

Conduit size for wiring shall be in accordance with NFPA 70. Wiring for the fire alarm system shall not be installed in conduits, junction boxes, or outlet boxes with conductors of lighting and power systems. No more than one conductor shall be installed under any screw terminal. All circuit conductors entering or leaving any mounting box, outlet box enclosure or cabinet shall be connected to screw terminals with each terminal marked in accordance with the wiring diagram. Connections and splices shall be made using screw terminal blocks. The use of wire nut type connectors are prohibited in the system. Wiring within any control equipment shall be readily accessible without removing any component parts. The fire alarm equipment manufacturer's representative shall be present for the connection of wiring to the control panel.

3.1.3 Control Panel

The control panel and its assorted components shall be mounted so that no part of the enclosing cabinet is less than 12 inches nor more than 78 inches above the finished floor. All manually operable controls shall be between 36 inches to 42 inches above the finished floor. Panel shall be installed to comply with the requirements of UL 864.

3.1.4 Coordination with Sprinkler Contractor

Contractor shall coordinate the connection of the water flow pressure switch and tamper switch into the new fire alarm control panel with the contractor as outlined in Section 15330 of these specifications. Wiring and conduit for these devices is the responsibility of the Section 15330 contractor as indicated in that Section.

3.1.5 Notification Appliances

Notification appliances shall be mounted at 80 inches above the finished floor unless limited by ceiling height or otherwise indicated.

3.2 INSTALLATION OF REMOTE STATION EQUIPMENT

3.2.1 Installation

The remote station equipment shall be installed as per manufacturer's recommendations.

3.2.2 Ground

Ground shall be provided through ground wire and not conduit. Ground wires shall be encased in conduit and bonded as per NFPA 70.

3.2.3 Lightning Arrestor

Lightning arrestor shall be mounted no higher than six feet above finished floor or ground level.

3.2.4 Programming the Transceiver

Prior to programming the transceiver, the contractor shall submit to the contracting officer's representative the requested transceiver and zone identifications. The request shall be on a form in section 16721 appendix "A". The assigned codes will be returned to the contractor for proper programming.

3.2.5 Accurate Programming

The contractor shall be responsible for accurate programming of the transceiver and any costs incurred to the government from improper transceiver programming.

3.2.6 Test Period

A 30 consecutive day test period shall be completed before fire alarm panel connection to the transceiver. If the remote station equipment should fail to function or respond properly during the test period; the problem shall be corrected and a new 30 day test period shall be conducted. The contractor will not be allowed to claim for time because of failed tests.

3.2.7 Operational Equipment during Test Period

For the test period, the remote station equipment shall be completely operational with out the fire alarm panel connected. Each zone input required and requested for final service shall have a dummy test load installed.

3.2.8 Test Procedures

During the test period the remote station equipment shall respond properly to each of the D-500 central stations of the base fire department. Periodically various zone inputs may be shorted or opened to simulate alarm and trouble signals. The transceiver shall transmit proper codes to the base fire department.

3.2.9 Interface to Fire Alarm Panel

After an error free test period the remote station equipment shall be interfaced to the fire alarm panel.

3.2.10 Procedure to Interface to Fire Alarm Panel

Interface of remote station equipment to the fire alarm panel shall be performed as follows:

1. The existing fire alarm panels shall remain in service connected to the telephone communications until the contractor is prepared to connect the remote station equipment.

2. Change over from telephone communication to the remote station equipment shall be performed within a normal eight hour workshift.

3. Change over to the remote station equipment shall only be performed after a 30 day error free test period.

4. Contractor shall coordinate with the base fire deparment for the best time of temporary removal of the fire alarm reporting system.

5. Contractor shall not leave the facility without any reporting system, for any period of time.

3.2.11 Antenna

Antenna shall be installed as per manufacturer's recommendations. Location shall be chosen with the least possible obstructions or as far as possible from interference generating items.

3.2.12 Cost of Improperly Located Antenna

The contractor shall be responsible and bear all the costs to relocate an improperly located antenna.

3.2.13 Antenna Match to Transceiver

The contractor shall provide an optimum antenna to transceiver match as per manufacturer's recommendations. The equipment used to verify the match shall be either a SWR meter or a Watt meter rated 0.1 watts to 500 watts for frequencies 25 to 1000 MHZ.

3.3 OVERVOLTAGE AND SURGE PROTECTION

All equipment connected to alternating current circuits shall be protected from surges per IEEE C62.41 and NFPA 70. All cables and conductors which serve as communications links, except fiber optics, shall have surge protection circuits installed at each end. Fuses shall not be used for surge protection.

3.4 GROUNDING

Grounding shall be provided to building ground or ground rods shall be driven. Maximum impedance to ground shall be 25 ohms. Ground rods shall not protrude more than 6 inches above grade.

3.5 TESTING - CLINIC ADDITION SYSTEM

The Contractor shall notify the Contracting Officer 30 days before the preliminary and acceptance tests are to be conducted. The tests shall be performed in accordance with the approved test procedures in the presence of the Contracting Officer. The control panel manufacturer's representative shall be present to supervise all tests. The Contractor shall furnish all instruments and personnel required for the tests.

3.5.1 Preliminary Tests

Upon completion of the installation, the system shall be subjected to functional and operational performance tests including tests of each installed initiating and notification appliance. Tests shall include the meggering of all system conductors to determine that the system is free from grounded, shorted, or open circuits. The megger test shall be conducted prior to the installation of fire alarm equipment. If deficiencies are found within the new system, corrections shall be made and the system shall be retested to assure that it is functional.

3.5.2 Acceptance Test

Testing shall be in accordance with NFPA 72. The recommended tests in NFPA 72 shall be considered mandatory and shall verify that all previous deficiencies of the new system have been corrected. The test shall include the following:

a. Test of each function of the control panel.

b. Test of each circuit in both trouble and normal modes.

c. Tests of alarm initiating devices in both normal and trouble conditions.

d. Tests of each control circuit and device.

e. Tests of each alarm notification appliance.

f. Tests of the battery charger and batteries.

g. Complete operational tests under emergency power supply.

h. Visual inspection of all wiring connections.

i. Opening the circuit at each alarm initiating device and notification appliance to test the wiring supervisory feature.

j. Ground fault

k. Short circuit faults

l. Stray voltage

m. Loop resistance

3.6 TRAINING

Training course shall be provided for the operations and maintenance staff. The course shall be conducted in the building where the system is installed or as designated by the Contracting Officer. The training period shall consist of 1 training day (8 hours per day) and shall start after the system is functionally completed but prior to final acceptance tests. The instructions shall cover all of the items contained in the operating and maintenance instructions.

-- End of Section --

APPENDIX A

REMOTE STATION EQUIPMENT DATE:_____

CONTRACTOR INFORMATION PROVIDED:

CONTRACTOR:_____

REQUESTOR:_____ PHONE:_____

MONACO TYPE BT_____ REV_____ SN_____

FIRE PANEL MFG_____ MODEL_____ SN_____

BLDG NUMBER_____

MONACO LOCATION_____ ANTENNA LOCATION_____

VSWR (1.3: 1 MAX) YES or NO_____ WHIP ANTENNA 52.5" YES or NO _____

GOVT PROVIDED		CONTRACTOR PROVIDED (DESCRIPTION)	TBL/ALARM
ZID #_____	ZONE 1	RSA RELAY TEST	
#_____	2	_____	_____
#_____	3	_____	_____
#_____	4	_____	_____
#_____	5	_____	_____
#_____	6	_____	_____
#_____	7	_____	_____
#_____	8	_____	_____
#_____	9	_____	_____
#_____	10	_____	_____
#_____	11	_____	_____
#_____	12	_____	_____
#_____	13	_____	_____
#_____	14	_____	_____
#_____	15	_____	_____
#_____	16	_____	_____

SECTION TABLE OF CONTENTS

DIVISION 16 - TELEPHONE SYSTEM, INSIDE PLANT

SECTION 16741

TELEPHONE SYSTEM, INSIDE PLANT

PART 1 GENERAL

1.1 REFERENCES
1.2 GENERAL REQUIREMENTS
1.2.1 Work and Equipment
1.2.2 Minimal Requirements
1.2.3 UL Listing
1.3 CONTRACTOR QUALIFICATIONS
1.3.1 Verification
1.3.2 Minimum Contractor Qualifications
1.4 MANUFACTURER QUALIFICATIONS
1.4.1 Verification
1.4.2 Minimum Manufacturer Qualifications
1.5 SUBMITTALS
1.6 SYSTEM DESCRIPTION
1.7 SYSTEM CONFIGURATION
1.7.1 The PDS supports both voice, facsimile, and data services.
1.8 DELIVERY, STORAGE AND PROTECTION
1.8.1 Protection
1.8.2 Delivery Coordination
1.8.3 Loss Liability
1.8.4 Contractor Responsibility

PART 2 PRODUCTS

2.1 GENERAL
2.1.1 Scope
2.1.2 Standard Products
2.1.3 UL Listing And Agency Approvals
2.1.4 Modifications
2.1.5 New Products
2.1.6 Defects
2.1.7 Identical Items
2.1.8 Item Identification
2.1.9 Operating Conditions
2.1.10 Latest Model
2.2 DISTRIBUTION PLANT
2.2.1 UTP Horizontal Cabling
2.2.2 Outlets, Taps and Bridges
2.2.3 Connecting Blocks
2.3 OUTLET ASSEMBLIES
2.3.1 Outlet Assemblies
2.3.2 Outlets For Wall Telephones
2.3.3 Combination Outlets
2.3.4 Pay Telephone Outlets
2.4 FACEPLATES

2.5 FIBER OPTIC CABLE SYSTEM
2.5.1 Backbone Cable
2.5.1.1 Multimode
2.5.2 Connecting Hardware
2.5.2.1 Connectors
2.5.2.2 Patch Panels
2.6 DATA PATCH PANELS
2.7 EQUIPMENT RACKS
2.8 TELEVISION DISTRIBUTION SYSTEM
2.8.1 Outlets with Faceplates
2.8.2 Support Hardware and Blocking

PART 3 EXECUTION

3.1 GENERAL PRACTICES
3.1.1 Industry Standards
3.1.2 Supervision
3.1.3 Related Trades
3.1.4 Tools and Test Equipment
3.1.5 Latent Conditions
3.1.6 Miscellaneous Hardware
3.1.7 Interference
3.2 CROSS CONNECTIONS
3.3 CABLING
3.3.1 Use of Cable Trays and Conduits
3.3.2 Cable Lubricant
3.3.3 Rated Penetrations
3.3.4 Cable Installation
3.3.5 Bridges and Taps
3.3.6 Pay Telephone Outlet Wiring
3.3.7 Jack Identification
3.3.8 Cable Identification
3.3.9 Environmental Considerations
3.3.10 Connectors
3.3.11 Mounting Hardware
3.3.12 Performance Responsibility
3.3.13 Horizontal Cabling and Outlets
3.4 TESTING
3.4.1 Test Plans
3.4.2 Test Conditions
3.4.3 Test Procedures and Reports

-- End of Section Table of Contents --

SECTION 16741

TELEPHONE SYSTEM, INSIDE PLANT

PART 1 GENERAL

1.1 REFERENCES

The publications listed below form a part of this specification to the extent referenced. The publications are referred to in the text by basic designation only. In the event that, at the time of system acceptance testing, the following documents have undergone revision or replacement by a current document, the systems as installed shall conform to such then applicable standard.

ELECTRONIC INDUSTRIES ASSOCIATION (EIA)

EIA/TIA 568A	1995) Commercial Building Telecommunications Wiring Standard
EIA/TIA 569	(1990) Commercial Building Standard for Telecommunications Pathways and Spaces
EIA/TIA TSB-67	Link performance transmission specification for field testing of unshielded twisted pair cable systems.

FEDERAL COMMUNICATIONS COMMISSION

FCC Part 15	(Jul 1986) Rules and Regulations: Radio Frequency Devices

INSULATED CABLE ENGINEERS ASSOCIATION (ICEA)

ICEA S-S80-576	(Sept. 1988, 2nd Ed.) ICEA Standard for Communications Wire and Cable for Wiring of Premises

MILITARY STANDARDS (MIL.STD.)

Mil. Std. 461B	Electromagnetic Emission and Susceptibility Requirements for the Control of Electromagnetic Interference.

NATIONAL FIRE PROTECTION ASSOCIATION (NFPA)

NFPA-70	(1996) National Electrical Code (NEC)
NFPA-99	(1993) Standard For Health Care Facilities

OCCUPATIONAL SAFETY AND HEALTH ACT (OSHA)

Public Law 91-596, 1970

UNDERWRITER'S LABORATORY (UL)

UL 94	Flammability of Plastics
UL 149	Transmit and Receive Equipment
UL 1863	Communication Circuit Accessories

U.S. DEPARTMENT OF AGRICULTURE
RURAL ELECTRIFICATION ADMINISTRATION (REA)

REA PC-4
Bulletin 345-63 (March 1976) Acceptance Tests and Measurements of Telephone Plant

1.2 GENERAL REQUIREMENTS

1.2.1 Work and Equipment

All equipment and all work under this section shall be furnished and installed by a certified telecommunications contractor, hereafter referred to as the contractor. With the exception of furnishing and installing conduit, cable trays, backboxes and pullwires, this work shall not be done by the electrical contractor. Paragraph, Minimum Contractor Qualifications, further defines this requirement.

1.2.2 Minimal Requirements

All specifications are minimal requirements.

1.2.3 UL Listing

a. Materials and equipment requiring UL 94, UL 149, or UL 1863 listing shall be so labeled.

b. Modification of products which nullifies UL label is not permitted.

1.3 CONTRACTOR QUALIFICATIONS

1.3.1 Verification

The Contractor shall submit verification of the qualifications specified below with the shop drawings submittals.

1.3.2 Minimum Contractor Qualifications

The Contractor shall have the following qualifications in Telecommunications Systems:

a. Contractor shall have a minimum of 5 years experience in the design, application, installation and testing of the specified systems and equipment.

b. Contractor shall employ factory trained personnel to perform systems engineering and design. All system designers and engineers shall have a minimum of five years experience on the specified system and all recommended components.

c. All supervisors and installers assigned to the installation of this system or any of its components shall have factory certification from each equipment manufacturer that they are qualified to install and test the provided products. General electrical trade staff (electricians) shall not be used for the installation of the fiber optic and unshielded twisted pair (UTP) cables and associated hardware.

d. All installers assigned to the installation of this system or any of its components shall have a minimum of 3 years experience in the installation of the specified copper and fiber optic cable and components.

1.4 MANUFACTURER QUALIFICATIONS

1.4.1 Verification

The Contractor shall submit verification of the qualifications specified below with the shop drawings submittals.

1.4.2 Minimum Manufacturer Qualifications

The Manufacturers shall have the following qualifications in Telecommunications Systems:

a. A minimum of 5 years experience in producing the types of systems and equipment specified.

b. Manufacturer shall guarantee parts availability for a minimum of 7 years from date of system acceptance by the Contracting Officer and shall guarantee completion of this contract in the event that the Contractor is a distributor and is unable to complete the contract.

c. Manufacturer shall provide certification of acceptance on the installed premises distribution system (PDS).

1.5 SUBMITTALS

Government approval is required for submittals with a "GA" designation; submittals having an "FIO" designation are for information only. The following shall be submitted in accordance with Section- 01305- SUBMITTAL PROCEDURES:

SD-01 Data

Manufacturer's Catalog Data; FIO

Data composed of manufacturer's catalog cuts, brochures, circulars, specifications and product data, and other information in sufficient detail and scope to verify compliance with requirements of the contract documents. This shall include a description of the system operating characteristics and individual data sheets for each item of equipment indicating descriptive and technical data, operating temperature limits, and mounting restrictions. If a data sheet covers several types or sizes of equipment, the sheet shall be marked to indicate the specific item provided.

Spare Parts Data; FIO

The contractor shall furnish spare parts data for each different item of material and equipment specified.

SD-04 Drawings

Detail Drawings; FIO

Detail drawings shall include complete riser diagrams, wiring and schematic diagrams, run sheets including number of conductors and wire number (ID), custom assembly details, installation details, and any other details required to demonstrate that the system complies with specifications, has been coordinated and shall properly function as a unit. Installation drawings shall be to scale with critical dimensions shown.

Installation details shall include layout and anchorage of equipment and appurtenances, mounting details, equipment relationship to other parts of the work including clearances required for maintenance and operation, and plan and elevation details that indicate the exact and totally coordinated physical location and size of each individual item of equipment.

Custom assembly drawings shall indicate configuration and dimensional details including drawings of panels, racks, and cabinets.

Coordination Drawings; FIO

Coordination drawings shall show all electronic and physical interface details.

As-Built Drawings; FIO

As-built drawings shall conform to Section 01040. AS-BUILT DRAWINGS. As-built drawings shall include final systems configuration, including location, type, gauge, connecting block and equipment.

SD-06 Instructions

Installation Procedures; FIO

Where installation procedures, or any part thereof, are required to be in accordance with the recommendations of the manufacturer of the material being installed, printed copies of these recommendations shall be forwarded to the Contracting Officer prior to the installation. Installation of the item shall not be allowed to proceed until the recommendations are received and approved.

SD-07 Schedules

Material and Equipment Lists; FIO

A complete list of material and equipment to be incorporated in the work. The list shall be arranged in the order of the specification and include the specification article number, the name, model and manufacturer for each item, and a reference to the manufacturer's data sheet for the item.

Equipment Schedules; FIO

The equipment schedules in this specification shall be revised as required to indicate the final installed configuration of equipment.

SD-08 Statements

Qualifications; FIO

The qualifications of the Manufacturer(s), Contractor(s), Designer(s) and the Installer(s) to perform the work specified herein shall be provided. This shall include proof of the minimum qualifications specified herein.

SD-09 Reports

Quality Control Plan; GA

A quality control plan conforming to Section - CONTRACTOR QUALITY CONTROL. The plan shall include a complete detailed acceptance test based on -REA PC-4, and -ICEA 8-80-576.

The plan shall include a complete detailed acceptance test.

Test plans and test procedures for on site testing shall be submitted for approval. The test plans and test procedures shall explain in detail, step-by-step, actions and the expected results to demonstrate compliance with the requirements of this specification, and the methods for simulating the necessary conditions of operation to demonstrate performance of the system.

Test plans shall include a list of all test equipment to be used, test data sheets, and names and qualifications of the person(s) that will be performing the tests.

Test plan documentation for the site test shall be submitted to the Contracting Officer for approval 30 days prior to the site tests.

Test Reports; FIO

Upon completion and testing of the installed system, test reports shall be submitted in booklet form showing all field tests performed to adjust each component and all field tests performed to prove compliance with the specified performance criteria.

SD-13 Certificates

Certificates of Compliance; FIO

Manufacturer's certificate shall indicate compliance with transmission and reliability requirements.

Where materials or equipment are specified to conform to the referenced standards or publications, submit certificates attesting that the items furnished under this section of the specification conform to the specified requirements.

SD-19 Operations and Maintenance Manuals

Operations and Maintenance Manuals; FIO

Manuals shall be as specified in Section-01731- OPERATION AND MAINTENANCE MANUALS.

1.6 SYSTEM DESCRIPTION

a. The telephone system, inside plant, hereafter referred to as the Premises Distribution System (PDS), shall provide the specified cabling, connection points, and jacks to support Government furnished Government Installed (GFGI) voice (to include fax) and data systems and station terminal apparatus.

b. The PDS shall be constructed with Category 5 UTP horizontal cabling to voice jacks, Category 5 UTP horizontal cabling to data jacks, and Category 5 UTP horizontal cabling to facsimile jacks.

c. Voice and facsimile jacks shall be wired with UTP cable meeting EIA/TIA 568A, Category 5 Specifications.

d. Data jacks shall be wired with UTP cable meeting EIA/TIA 568A, Category 5 Specifications.

e. All active components (i.e., telephone instruments, Network Hubs and data terminals) for voice and data systems shall be GFGI.

f. All cable installation and the marking of UTP horizontal cables and terminations shall be done in accordance with EIA/TIA-606.

1.7 SYSTEM CONFIGURATION

1.7.1 The PDS supports both voice, facsimile, and data services.

a. Voice service shall be provided via UTP horizontal cabling from each voice jack to the 66M150 type termination blocks, on the backboard, in the Communications Room.

b. Data service shall be provided via UTP horizontal cabling from each data jack to the Data Category 5 Patch Panel installed in equipment racks in the Communications Room.

1.8 DELIVERY, STORAGE AND PROTECTION

1.8.1 Protection

All equipment delivered and placed in storage shall be stored with protection from the weather, humidity and temperature variation, dirt and dust, or other contaminants.

1.8.2 Delivery Coordination

Coordinate deliveries with the Contracting Officer to insure a timely installation. Material shall not be delivered to the construction site earlier than 60 days prior to installation.

1.8.3 Loss Liability

The Contractor shall be liable for any loss due to delivery and storage problems.

1.8.4 Contractor Responsibility

The Contractor shall be responsible for all handling and control of equipment and material provided under this contract.

PART 2 - PRODUCTS

2.1 GENERAL

2.1.1 Scope

All products, installation, labor, apparatus, and procedures necessary to properly mount, install, and test the system in full accordance with the manufacturer's certifications and specifications and the functional requirements contained in this specification, shall be supplied, provided, and performed within the scope of the work specification and at no additional cost to the Government, regardless of the individual requirements of this specification, unless such service, procedure, or material is specifically waived herein.

2.1.2 Standard Products

All material and equipment as provided shall be the standard Commercial-Off-The-Shelf (COTS) products of a manufacturer(s) regularly engaged in the manufacture of such products. All shall be typical commercial designs that comply with the requirements specified. All material and equipment shall be readily available through manufacturers and/or distributors.

2.1.3 UL Listing And Agency Approvals

Materials and equipment requiring UL listing or other agency approvals shall be so labeled.

2.1.4 Modifications

Modification of products which nullifies UL label or other agency approval is not permitted. Modification of product(s) which would result in a non-standard product offering as described in paragraph 2.1.2 above is not permitted.

2.1.5 New Products

All products shall be new.

2.1.6 Defects

All products shall be free of defects.

2.1.7 Identical Items

Items of the same classification shall be identical. This requirement includes equipment, modules, assemblies, parts, firmware, and components for the entire System.

2.1.8 Item Identification

Each major component of equipment shall have the manufacturer's name, model number, and serial number on a plate secured to the equipment. If appropriate or required on a component specific basis, each major component shall also exhibit the necessary UL label and FCC registration numbers adjacent to the above identification plate.

2.1.9 Operating Conditions

All material shall be designed for the normal office environment and shall be rated for continuous operation under ambient environment condition of 50° F to 85° F and 35 to 65 percent relative humidity, noncondensing.

2.1.10 Latest Model

All material shall be the manufacturer's latest model, design, release, version, and quality in production at time of delivery that has been in satisfactory use for a minimum of 6 months prior to the installation date.

2.2 DISTRIBUTION PLANT

The PDS is a UTP based distribution system which utilizes industry standard media and installation practices.

In addition to the requirements specified herein all media shall conform to EIA/TIA 568-A, EIA/TIA 569, ICEA-80-576, and NFPA-70 NEC.

2.2.1 UTP Horizontal Cabling

a. The UTP cabling shall have the following minimum characteristics:

#24 AWG solid conductor.

Horizontal cables connecting Voice and Facsimile Jacks shall conform to all requirements of EIA/TIA 568-A, Category 5 specifications.

Horizontal cables connecting Data Jacks shall conform to all requirements of EIA/TIA 568A, Category 5 specifications.

Horizontal cables shall be 4 pair, unshielded, and individually jacketed for each four pair combination. Each jack in each outlet assembly shall terminate an individual horizontal cable.

Horizontal cables delay skew shall not exceed 50 ns per 100 meters.

2.2.2 Outlets, Taps and Bridges

There shall be no outlets, taps, bridges or any other terminations in cabling other than in the Communications Room and at the outlet assembly (jack) as specified in this section and in the drawings.

2.2.3 Connecting Blocks

a. All connecting blocks utilized shall be Type 66M150 type meeting EIA/TIA 568A, Category 5 Specifications.

b. Connecting blocks shall be mounted on plywood backboards in the Communications Rooms. The connecting blocks shall have legs to mount away from the surface, providing space for neat, out-of-the-way wire routing.

c. The connecting blocks shall be of fire-retardant, molded plastic with horizontal color coded index strips that secure and organize groups of 25 UTP pairs of 22-26 gauge each.

d. The connecting blocks shall contain double ended, insulation displacing quick clips that terminate 22-26 gauge conductors. These clips shall provide gas tight connection between the conductor and cross-connect wire and shall be fully enclosed in non-conductive plastic, eliminating the possibility of accidental contacts on circuits.

e. All connecting blocks shall conform to the requirements of NFPA- 70 NEC.

2.3 OUTLET ASSEMBLIES

2.3.1 Outlet Assemblies

Outlet assemblies used in the PDS shall consist of modular jacks assembled as specified in this paragraph and as indicated on the drawings. The modular jacks shall conform to the requirements of EIA/TIA-568A, Category 5 and NFPA-70 NEC. In addition, they shall have the following characteristics:

a. The minimum life of the jack shall be in excess of 700 connection cycles.

b. Contacts shall be a minimum of .014 inches thick, phosphor bronze.

c. Contacts shall be gold plated in the contact area to a minimum of .000050 inches.

d. Gold Plating, which may be applied selectively, shall be applied over a .000100 inches nickel underplate.

e. Housings of receptacles shall be manufactured of flame retardant thermoplastic. Plugs shall be manufactured of polycarbonate plastic.

f. Contact centers shall be at .040 inches

g. The inside dimensions of the female jack shall not exceed the outside dimensions of the male plug by more than .007 inches, and shall exceed the dimension by a minimum of .001 inches at all points within the overlap area.

2.3.2 Outlets For Wall Telephones

These outlets shall consist of a flush mount, 8 conductor, modular outlet with a faceplate of stainless steel. All four pairs of the UTP horizontal cable shall be terminated at the outlet. All four pairs shall be terminated in the Communication Room.

2.3.3 Combination Outlets

PDS outlets for voice, data and fax combinations shall be configured and marked as shown on Drawings. All four pairs of a standard four pair UTP horizontal cable shall be terminated at each of the jacks and at the appropriate termination area in the Communication.

2.3.4 Pay Telephone Outlets

A four pair UTP horizontal cable will be installed from the outlet to the Communication Room. One foot minimum unterminated cable will be coiled in the box and the box covered with a blank faceplate.

2.4 FACEPLATES

Faceplates for wall mounted telephones shall be stainless steel. All other faceplates shall be nylon or stainless steel configured as indicated in the drawings. Nonmetallic faceplates shall be manufactured of high impact thermoplastic (e.g. Nylon) and of a color meeting NEMA standards. If no particular standard dictates the color, it shall have a color as indicated in 16415.

2.5 FIBER OPTIC CABLE SYSTEM

2.5.1 Backbone Cable

2.5.1.1 Multimode

Multimode fiber optic backbone cable shall meet the requirements of EIA/TIA-568A and ICEA S-83-596 for 62.5/125 micrometer multimode graded index optical fiber cable. Numerical aperature for each fiber shall be a minimum of 0.275. Cable construction shall be tight buffered type. Individual fibers shall be colored coded for identification. Cable shall be imprinted with fiber count and aggregate lenght at regular intervals. Cable shall be rated OFNP per NFPA-70.

2.5.2 Connecting Hardware

2.5.2.1 Connectors

Connectors shall be SC type with a maximum insertion loss of .5 db. Connectors shall meet performance requirements of EIA/TIA-568A and be field installable. The connectors shall terminate fiber sizes as required for the service.

2.5.2.2 Patch Panels

Patch panels shall be a complete system of components by a single manufacturer, and shall provide termination, splice storage, routing, radius limiting, cable fastening, storage, and cross-connection. The patch panel shall be 19 inch equipment rack mounted.

2.6 DATA PATCH PANELS

Data patch panels to terminate data cables shall be mounted in equipment racks installed in the Communication Room. The panels shall meet EIA/TIA-568A, category 5 requirements.

2.7 EQUIPMENT RACKS

Equipment racks shall be metallic and 8 feet 0 inches in height.

2.8 TELEVISION DISTRIBUTION SYSTEM

The television distribution system in the addition facility consists of television outlet boxes, television outlet jacks, and faceplates.

2.8.1 Outlets with Faceplates

Outlets with faceplates shall be flush wall mounted and shall not protrude from the face of the wall more than 0.25". Each outlet shall have an attenuation of less than 0.1 dB, and a VSWR of less than 1.15 to 1. Cable connectors shall be 75 ohm type "F" units. All metallic portion of connectors shall be composed of anodized brass, beryllium copper, or phosphorus bronze. The outlet connector shall be type "F" threaded female plug.

2.8.2 Support Hardware and Blocking

All support hardware and blocking for wall mounted televisions shall be Contractor-furnished and Contractor-installed. All television sets and cabling are Government-furnished and Government-installed.

PART 3 - EXECUTION

3.1 GENERAL PRACTICES

3.1.1 Industry Standards

All work shall be installed as indicated and specified, and in accordance with acknowledged industry and professional standards and practices, and manufacturers' recommendations.

3.1.2 Supervision

During the entire installation the Contractor shall maintain on-site a competent supervisor and supporting technical staff acceptable to the Contracting Officer.

3.1.3 Related Trades

The Contractor shall coordinate all efforts with those of related trades. In the event of any conflicts, delayed or improper preparatory work by others, he shall notify the Contracting Officer and the Contracting Officer's decision shall be binding.

3.1.4 Tools and Test Equipment

The Contractor shall provide all tools and test equipment needed to install, and test the system.

3.1.5 Latent Conditions

The Contractor shall verify all field (latent) conditions.

3.1.6 Miscellaneous Hardware

The Contractor shall provide all miscellaneous hardware and accessories as required for a proper installation.

3.1.7 Interference

The Contractor shall take standard installation precautions to prevent and guard against electromagnetic (EMI), radio frequency (RFI), and electrostatic interference (ESI) to or from the system and in total conformance with FCC Standards and all of the manufacturer('s, s') specification(s) and installation directive(s).

3.2 CROSS CONNECTIONS

a. All UTP Category 5 voice and facsimile cross connections are the responsibility of the Government. Cross connects between Category 5, Voice Cables, and the outside plant protector blocks can be Category 3 type cable.

b. Cross connections of Level 5 circuits shall be made with tightly twisted pair jumper wire which shall be color coded two, four, six, or eight pairs as required for the type of circuit being established. The wire color shall differentiate between station, and pay telephone service cross-connections.

c. All cross connections and UTP Level 5 data cable cross connections are the responsibility of the Government.

3.3 CABLING

3.3.1 Use of Cable Trays and Conduits

Conduit and cable tray fill shall not exceed 40 percent. All cable installed in plenum spaces shall be plenum rated.

3.3.2 Cable Lubricant

A proper cable lubricant, approved by the Contracting Officer, shall be applied at the manufacturer's recommended rate during the installation of the cable assemblies into conduits. No cable lubricant is to be utilized on cable assemblies installed in cable trays.

3.3.3 Rated Penetrations

a. All backbone cabling shall pass through rated partitions as noted on the drawings. All cables shall be installed in accordance with EIA/TIA 568A or the latest version of the document available at the time of award.

b. It shall be the responsibility of the Contractor to perform any and all sealing, filling, or fire stopping through bulkhead fittings with materials and practices in compliance with applicable codes, regulations, and directives.

3.3.4 Cable Installation

Cables shall be installed in accordance with applicable fire codes, the manufacturer's(s') recommendations and the following requirements:

a. There shall be no kinks, sharp bends or deformations. Any bends in the cable shall meet the recommendations of the cable manufacturer.

b. There shall be attachments, fastenings, and supports in conformance with the cable manufacturer(s) recommendations for the type and size cable as installed and consistent with the installed environment.

c. The cable shall be installed in a manner so as to prevent crushing, stretching, abrasion, puncture, and other mechanical damage.

d. The UTP cable shall maintain the following clearances from sources of potential electrical interference:

12 inches from fluorescent or neon lighting fixtures.

3.3 feet from transformers, motors, or other sources of electromagnetic fields.

5 inches from unshielded power cables for voltages up to 480 volts and less than 2 kVa, 12 inches for circuits from 2 to 5 kVa, and 36 inches for circuits over 5 kVa.

e. Neatly strap, dress, and adequately support all cable and cross connects. Provide cable clamps, strain relief devices, and ties as required to maintain the workmanlike appearance of the installation and as recommended by the manufacturer.

f. In no case shall any cable be attached to any conduit, pipe or associated supporting clamp or bracket.

g. No less than four (4) and no more than six (6) inches of slack material shall be left in each horizontal cable at each outlet to facilitate maintenance.

h. Cables shall be installed in the conduits, cable trays, and wireways provided and as indicated in the drawings. No cable is to be installed outside these wireways including but not limited to freely suspended without support, on decks or walking surfaces, on suspended ceiling grid work, or on the work of other trades which are not specifically designated as wireways.

i. Cables shall be installed loosely within cable trays and conduits. Cables shall not be taped, laced or strapped to each other or bundled.

j. Cable shall enter and leave cable trays in a manner which conforms to manufacturer's recommendations. Suitable and manufacturer recommended guards and protectors shall be employed on the cable tray to prevent jacket cutting and abrasion. Such materials shall be provided by the Contractor.

3.3.5 Bridges and Taps

No horizontal cables shall be connectorized, spliced, bridge-tapped, or otherwise have the sheath disturbed between the jack and the Communication Room.

3.3.6 Pay Telephone Outlet Wiring

a. Horizontal cable shall be provided at all pay telephone wall outlets.

b. The cable shall be unterminated at the station location, and terminated in the Communication Room by the Contractor.

c. The pay telephone, jack, termination and cross connection thereof shall be furnished and installed by the others.

3.3.7 Jack Identification

Jack location numbers shall be clearly marked at the jack and connecting block. The numbering system shall be developed in a cooperative effort with the base Comm Squadron staff through the Contracting Officer.

3.3.8 Cable Identification

Each system cable, regardless of length, shall have the ID marked at each termination end. There shall be no unmarked cable in a system. Marker bands, if used, shall be made of vinyl material, be self-adhering, and provide a selection of preprinted numbers protected from wear by a tough, transparent polyester film. Identification codes marked on cable shall correspond to the codes shown on drawings, riser diagrams, and the legends displayed at terminal locations, and in the distribution plant record documents.

3.3.9 Environmental Considerations

a. Under no conditions shall connectors be used in an environment that routinely or for prolonged periods exhibits a relative humidity in excess of 75 percent.

b. Under no conditions shall connectors be utilized in applications that would subject the connector system to continued exposure to the weather.

c. Under no conditions shall connectors be utilized in such a manner so as to subject the connector to submersion in any liquid under any condition.

d. Under no conditions shall connectors be utilized in an explosive or enriched atmosphere without certification of the manufacturer of that connector's suitability, on a case specific basis and in conformance to all applicable fire and building codes in effect for the installation site, for the specific application.

3.3.10 Connectors

a. All connectors in this system shall be assembled with full compliance to the assembly standards of the manufacturer of the connector.

b. All connectors shall be assembled with tooling, dies, and procedures approved by the standards of the connector manufacturer.

3.3.11 Mounting Hardware

a. Any surface mounted device shall be attached to the surface with a minimum of two attaching devices appropriate for the surface to which attached.

b. Attachment hardware shall meet apparatus manufacturer('s, s') recommendations in strength and quantity.

c. In the absence of manufacturer's direction, attachment devices shall exhibit a holding power in excess of the specified tensile strength of the connector and wire.

3.3.12 Performance Responsibility

a. Approval of a (the) manufacturer of a particular cable for use with a specified connector shall in no manner remove the obligation of the Contractor to insure that the cable assemblies shall meet or exceed the electrical characteristics of the connector and the appropriate governing specifications of the system.

b. Approval of the manufacturer of a particular cable for use with a particular connector, and the use of that connector, shall in no manner remove the obligation of the Contractor to insure that the combination of product or products are electrically and mechanically suitable for the PDS, including all considerations of the following: operating characteristics, operating currents and frequencies, interference both generated and absorbed, transmission characteristics, environmental conditions including moisture, temperature, caustic, corrosive or explosive atmospheres, and the maintenance requirements of the installed system.

3.3.13 Horizontal Cabling and Outlets

a. At each "Data" jack, an individual four pair UTP Category 5 horizontal cable shall be terminated on the individual data jack of an outlet. The UTP horizontal cable shall be routed through the attached conduit to the communications cable tray. The horizontal cable shall proceed through the cable tray to the Communications Room. There it shall be attached in the area assigned to data outlet connections.

b. At each "Voice" jack and "Facsimile" jack, an individual four pair UTP Category 5 horizontal cable shall be terminated on the individual jack of an outlet. The UTP horizontal cable shall be routed through the attached conduit to the communications cable tray. The horizontal cable shall proceed through the cable tray to the Communications Room. There it shall be attached in the area assigned to voice outlet connections.

c. Horizontal cabling shall be installed and terminated at all outlet locations as indicated on the drawings. Horizontal cabling shall take the form of a "universal wiring plan" where each horizontal cable is connected directly from each individual jack in an outlet to the communication room.

d. The horizontal cable shall be installed as a point-to-point metallic circuit from the termination block to the outlet or junction box, consist of one cable as specified, and be continuous and uninterrupted with regards to both the jacket and all contained conductors.

e. The horizontal cables serving each jack shall have no bridge taps, branches, stubs, splices or "Y" connections at any place in their length. Any required bridging of Voice jacks shall take place only in the communications room. There shall be no bridging of Data jacks.

f. The horizontal cables shall have no interruption of sheath along its length from one inch within the outlet box containing the jack or outlet until one inch from the connecting block in the Communications Room.

3.4 TESTING

3.4.1 Test Plans

The Contractor shall develop the Test Plans defining all the tests required to ensure that the system meets technical, operational, and performance specifications. Test Plans, at a minimum, shall be in compliance with REA PC-4, and EIA/TIA-67. The Test Plans shall define milestones for each test, equipment, personnel, facilities, and supplies required. The Test Plans shall identify the capabilities and functions to be tested. The test plan shall be delivered to the Contracting Officer at least thirty (30) days prior to the scheduled date of testing.

3.4.2 Test Conditions

The test plan shall include provision to test all equipment concurrent with the following conditions:

a. Power Level

The system shall be tested concurrent with the normal power level operation of all electrical power circuits in the project facility.

b. Conditions

The system shall be tested with all components operational as prescribed by the manufacturer(s) and with each active device in the system operating at the normal operating temperature, air flow and humidity levels for each area that contains the active equipment.

c. Supply Power

The system shall be tested in full operation on commercial (normal) power.

3.4.3 Test Procedures and Reports

The test procedures shall be developed from the test plan and design documentation. The procedures shall consist of detailed instructions for the best setup, execution, and evaluation of the tests. The procedures shall consist of visual inspection, and verification of component and circuit compliance with cited standards. The contractor shall provide all the personnel and all necessary equipment to perform the specified test. Visual operations can begin at any period during installation and are used to list all newly installed equipment. Reports shall be delivered to the Government within 7 days after completion of each test. A complete set of the test results shall be submitted. The 75 CS staff shall be part of the contracting officers evaluation team.

a. Basic Connection Tests

Basic connection tests shall verify that the outlets and identifications are posted and connected in accordance with the drawings and database as provided in the schedule.

b. Unshielded Twisted Pair Tests

All metallic cable pairs shall be tested for proper identification and continuity. All opens, shorts, crosses, grounds, and reversals shall be corrected. Correct color coding and termination of each pair shall be verified in the communications closet and at the outlet. Horizontal wiring shall be tested from and including the termination device in the communications closet to and including the modular jack in each room. Backbone wiring shall be tested end-to-end, including termination devices, from terminal block to terminal

block, in the respective communications closets. These tests shall be completed and all errors corrected before any other tests are started.

c. The Contractor shall supply manufacturer's certification or catalog sheets which clearly indicate that transmission tests have been conducted on the specific Category 5 UTP products installed by this project, and that such products, as installed, are in full conformance with the TIA/EIA 568A specification, as referenced herein.

d. EIA/TIA TSB-67 Tests

All category 5 circuits shall be tested in accordance with EIA/TIA TSB 67. Testing shall be done using the TSB-67 Basic Link test procedure. Test equipment used shall meet the Class II accuracy requirements of TSB-67. The latest version of TSB-67 available at contract award shall be used.

e. Fiber Optic Cable

Unless stated otherwise, tests shall be performed from both ends of each individual fiber. Connectors shall be visually inspected for scratches, pits or chips and shall be reterminated if any of these conditions exist. Each fiber shall be tested for insertion loss at 850 and 1300 nm using a light source similar to that used for the intended communications equipment. High-resolution optical time domain reflectometer (OTDR) tests shall be performed from one end of each fiber. Scale of the OTDR trace shall be such that the entire fiber appears over a minimum of 80 percent of the x-axis.

f. The Contractor shall supply test results to indicate that complete end to end testing has been conducted on each strand of all fiber optic cables installed by this project, and that such fibers, as and where installed, are in full conformance with the specifications herein.

End Of Section-

SECTION TABLE OF CONTENTS

DIVISION 16 - TELEPHONE SYSTEM, OUTSIDE PLANT

SECTION 16742

TELEPHONE SYSTEM, OUTSIDE PLANT

PART 1 GENERAL

1.1 REFERENCES
1.2 SUBMITTALS
1.3 DELIVERY AND STORAGE

PART 2 PRODUCTS

2.1 STANDARD PRODUCTS
2.2 DISTRIBUTION FRAME
2.2.1 Copper Conductor Type, Building Distribution Frame (BDF)
2.2.1.1 Connector Blocks
2.2.2 Fiber Optic Patch Panel
2.3 CABLE
2.3.1 Copper Conductor Cable
2.3.1.1 Underground
2.3.2 Fiber Optic Cable
2.3.2.1 Compatible Components
2.3.2.2 Cable Cores
2.3.2.3 Optical Fiber
2.3.2.4 Optical Fiber Coatings
2.3.2.5 Color Coding
2.3.2.6 Fiber Protection
2.3.2.7 Tint Requirements
2.3.2.8 Buffer Tubes
2.3.2.9 Filling Compound Requirements
2.3.2.10 Tensile Strength
2.3.2.11 Outer Jacket
2.3.2.12 Fiber Differentiation
2.3.2.13 Cable Labeling
2.3.2.14 Attenuation
2.3.2.15 Bandwidth
2.3.2.16 Numerical Aperture
2.3.2.17 Bending Tolerance
2.3.2.18 Tensile Load Tolerance
2.3.2.19 Cyclic Flexing Tolerance
2.3.2.20 Crush Resistance
2.3.2.21 Impact Resistance
2.3.2.22 Gel Compound Temperature Tolerance
2.3.2.23 Fluid Penetration Test
2.3.2.24 Performance Requirements
2.3.2.25 Defects and Imperfections
2.4 CONDUIT
2.5 INNERDUCT
2.6 CLOSURES
2.6.1 Copper Conductor Closures
2.6.1.1 Underground
2.6.2 Fiber Optic Closures
2.6.2.1 Underground

2.7 CABLE SPLICES, CONNECTORS, CABLE ASSEMBLIES, AND ORGANIZERS
2.7.1 Copper Cable Splices
2.7.2 Fiber Optic Cable Splices
2.7.3 Preconnectorized Single-Fiber Cable Assembly
2.7.4 Fiber Optic Splice Organizer
2.8 MISCELLANEOUS ITEMS
2.8.1 Shield Connectors
2.8.2 Grounding Braid

PART 3 EXECUTION

3.1 INSTALLATION
3.1.1 Underground Cable
3.1.2 Innerduct
3.1.3 Surge Protection
3.2 SPLICING
3.2.1 Copper Conductor Splices
3.2.2 Fiber Optic Splices
3.3 GROUNDING
3.3.1 Ground Bar (GB)
3.3.2 Incoming Outside Plant Cables
3.3.2.1 Cable Entrance Ground Bar
3.3.2.2 Building Distribution Frame Ground Bar
3.3.2.3 Shields
3.3.3 Building Distribution Frame Grounding
3.3.3.1 Protection Assemblies
3.3.3.2 GB Connection
3.3.4 Manholes
3.4 ACCEPTANCE TESTS
3.4.1 Copper Conductor Cable
3.4.2 Fiber Optic Cable
3.4.2.1 OTDR Test
3.4.2.2 Attenuation Test

-- End of Section Table of Contents --

SECTION 16742

TELEPHONE SYSTEM, OUTSIDE PLANT

PART 1 GENERAL

1.1 REFERENCES

The publications listed below form a part of this specification to the extent referenced. The publications are referred to in the text by basic designation only.

AMERICAN NATIONAL STANDARDS INSTITUTE (ANSI)

ANSI C2	(1996) National Electrical Safety Code

AMERICAN SOCIETY FOR TESTING AND MATERIALS (ASTM)

ASTM A 228	(1983) Steel Wire, Music Spring Quality
ASTM C 338	(1973; R 1988) Softening Point of Glass
ASTM D 2239	(1989) Polyethylene (PE) Plastic Pipe (SIDR-PR) Based on Controlled Inside Diameter

ELECTRONIC INDUSTRIES ASSOCIATION (EIA)

EIA 455-3	(May 1981) FOTP-25 Standard Test Procedures for Fiber Optic Fibers, Cables, Transducers, Connecting and Terminating Devices - Addendum No. 3 to EIA 455
EIA 455-5	(Sep 1982) FOTP-54 Standard Test Procedures for Fiber Optic Fibers, Cables, Transducers, Connecting and Terminating Devices - Addendum No. 5 to EIA 455
EIA 455-41	(Feb 1985) FOTP-41 Compressive Loading Resistance of Fiber Optic Cables
EIA 455-46	(May 1983) FOTP-46 Spectral Attenuation Measurement for Long-Length, Graded-Index Optical Fibers
EIA 455-47A	(May 1989) FOTP-47 Output Farfield Radiation Pattern Measurement
EIA 455-81	(Mar 1985) FOTP-81 Compound Flow (Drip) Test for Filled Fiber Optic Cable
EIA 455-103	(Jul 1984) FOTP-103 Buffered Fiber Bend Test

INSULATED CABLE ENGINEERS ASSOCIATION (ICEA)

ICEA S-56-434	(1983; 5th Ed) Polyolefin Insulated Communication Cables for Outdoor Use

NATIONAL FIRE PROTECTION ASSOCIATION (NFPA)

NFPA 70	(1996) National Electrical Code

RURAL ELECTRIFICATION ADMINISTRATION (REA)

REA Bulletin 344-2	(Jan 1989; Supple 1 thru 8) List of Materials Acceptable for Use on Telephone Systems of REA Borrowers

REA PC-2	(Jan 1978) Splicing Standard
REA PC-4	(May 1976) Acceptance Tests and Measurements of Telephone Plant
REA PE-33	(Mar 1985) Shield Bonding Connectors
REA PE-39	(Jul 1987) Filled Telephone Cables
REA PE-74	(Oct 1985) Filled Splice Closures
REA PE-87	(Dec 1983) Terminating (TIP) Cable
REA TE&CM 644	(Apr 1983; Issue No. 3) Design and Construction of Underground Cable (Physical Plant)
REA TE&CM 823	(Aug 1980, Issue No. 3) Electrical Protection by Use of Gas Tube Arrestors

UNDERWRITERS LABORATORIES (UL)

UL 497	(Dec 15, 1978; 4th Ed; Rev thru Oct 9, 1984) Protectors for Communications Circuits

1.2 SUBMITTALS

Government approval is required for submittals with a "GA" designation; submittals having an "FIO" designation are for information only. The following shall be submitted in accordance with Section 01300 SUBMITTAL DESCRIPTIONS:

SD-01 Data

Spare Parts; FIO.

Data lists of spare parts, tools, and test equipment for each different item of material and equipment specified, after approval of the detail drawings and not later than 2 months prior to the date of beneficial occupancy. The data shall include a complete list of parts and supplies, with current unit prices and source of supply.

SD-04 Drawings

Telephone System; FIO.

Detail drawings consisting of a complete list of equipment and material including manufacturer's descriptive and technical literature, performance charts and curves, catalog cuts and installation instructions. Detail drawings shall also contain complete wiring and schematic diagrams and any other details required to demonstrate that the cable system has been coordinated and will properly support the switching and transmission systems identified in the specification and drawings. Drawings shall show proposed layout and anchorage of equipment and appurtenances, and equipment relationship to other parts of the work including clearance for maintenance and operations. System drawings showing final configuration, including the location, gauge, pair, duct and innerduct arrangement, or conductor assignment of outside plant, and protector and connector blocks layout at the termination points after installation.

SD-08 Statements

Test Plans; FIO.

Test plans shall define all tests required to ensure that the system meets specified requirements. The test plans shall define milestones for the tests, equipment, personnel, facilities, and supplies required. The test plans shall identify the capabilities and functions to be tested.

SD-09 Reports

Acceptance Tests; FIO.

Test reports in booklet form showing all field tests performed, upon completion and testing of the installed system.

Installation Procedures; FIO.

Where installation procedures, or any part thereof, are required to be in accordance with the recommendations of the manufacturer of the material being installed, printed copies of these recommendations, prior to installation. Installation of the item will not be allowed to proceed until the recommendations are received and approved.

SD-13 Certificates

Material Certificates; FIO.

Where materials or equipment are specified to conform to the standards or publications and requirements of REA, ANSI, ASTM, NFPA, EIA, or UL, proof that the items furnished under this section of the specification conform to the specified requirements.

1.3 DELIVERY AND STORAGE

All cable shall be shipped on reels. The diameter of the drum shall be at least 13 times the diameter of the cable. The reels shall be substantial and so constructed as to prevent damage during shipment and handling. The outer end of the cable shall be securely fastened to the reel head so as to prevent the cable from becoming loose in transit. The inner end of the cable shall project into a slot in the side of the reel, or into a housing on the inner slot of the drum, in such a manner and with sufficient length to make it available for testing. The inner end shall be fastened so as to prevent the cable from becoming loose during installation. End seals shall be applied to each of the cables to prevent moisture from entering the cable. The reels with cable shall be suitable for outside storage conditions when the temperature ranges from minus 40 degrees C to plus 65 degrees C, with relative humidity from 0 to 100 percent. Equipment, other than cable, delivered and placed in storage shall be stored with protection from the weather, humidity and temperature variation, dirt and dust, or other contaminants.

PART 2 PRODUCTS

2.1 STANDARD PRODUCTS

Materials and equipment shall be the standard products of a manufacturer regularly engaged in the manufacture of such products and shall be the manufacturer's latest standard design that has been in satisfactory use for at least 2 years prior to bid opening. Each major component of equipment shall have the manufacturer's name and type identified on the equipment.

2.2 DISTRIBUTION FRAME

2.2.1 Copper Conductor Type, Building Distribution Frame (BDF)

The BDF in the Hospital Main Communications room is an existing telephone backboard for the mounting of connector blocks, 66M150 termination blocks, protector modules, and ground bar.

2.2.1.1 Connector Blocks

Connector blocks shall be provided in the Hospital, consisting of flame-retardant molded plastic mounted on the telephone backboard, shall be provided to terminate 300 pairs of outside plant cable. The connector blocks shall be 22-gauge stub type equipped with 30-foot top-mounted cable stubs. The cable stubs shall be polyethylene insulated with an overcoat of polyvinyl chloride (PVC) for flame resistance and shall conform with REA PE-87. The cable shall not be gel filled. Its core shall be finished with a nonhygroscopic core tape. The sheath shall consist of 0.008 inch aluminum tape coated on one side, gold colored vinyl resin primer, and an outer jacket.

2.2.2 Fiber Optic Patch Panel

The patch panel shall provide a location for maintenance and cross-connecting of fiber optic cables. The panel shall be constructed of 0.125 inch minimum thick aluminum and have connectors which interface the inside plant fiber optic jumper cable with the outside plant fiber optic cable. Panels shall be equipped with engraved laminated plastic nameplates above each connector. The patch panel shall be equipped with fiber optic "ST" connectors to terminate all fibers of the fiber optic cable.

2.3 CABLE

2.3.1 Copper Conductor Cable

Copper conductor cable shall be 300 pair, 24 gauge, and conform to the following:

2.3.1.1 Underground

REA PE-39 for cable smaller than 400 pair, and REA PE-39 or REA PE-89 for cable 400 pair or larger.

2.3.2 Fiber Optic Cable

Reeled fiber optic cables shall consist of a 72 fiber cable and a 48 fiber cable and shall be of continuous manufacture with no factory splices in the fiber.

2.3.2.1 Compatible Components

Materials used within a given cable shall be compatible with all other materials used in the same cable when such materials come into intimate contact. All cable components used shall have no adverse affect on optical transmission or on the mechanical integrity characteristics of the fiber placed in the cable. All materials used shall be nontoxic, noncorrosive, and shall present no dermal hazard. The minimum required material components applied to fiber optic cable construction are central core or sheath strength member, color-coded optical fibers, inner jacket, pulling strength members, and outer jacket.

2.3.2.2 Cable Cores

A central core member or sheath strength member shall be included to serve as a cable core foundation to reduce strain on the fibers but not to serve as a pulling strength member. The material of the central core member shall be nonmetallic. The sheath strength member may be either metallic or nonmetallic. The metallic strength element shall be spring quality music type wire per ASTM A 228. The nonmetallic strength element shall be glass filament.

2.3.2.3 Optical Fiber

Single-mode optical fibers shall be contained in the cables. The single-mode fiber shall be step index optical glass. The core diameter shall be 8.5 plus or minus 2 microns. The cladding diameter shall be 125 microns plus or minus 5 microns. The core-cladding offset shall be less than 1 micron. The minimum tensile strength of the fiber after primary protective coating shall be greater than 50,000 psi. The softening point of the clad material of the optical fiber shall be 1,630 degrees C plus or minus 50 degrees C in compliance with ASTM C 338.

2.3.2.4 Optical Fiber Coatings

The optical fiber shall be coated with a suitable material to preserve the intrinsic high tensile strength of the glass fiber. The outside diameter of the coated optical fiber shall be 250 microns plus or minus 15 microns. The coating material shall be readily removable, mechanically or chemically, without damaging the optical fibers when the removal is desired.

2.3.2.5 Color Coding

The primary protective coated fiber shall be coated with a color-code coating for individual fiber identification. The maximum outside diameter of color- code coated fiber shall be less than 300 microns.

2.3.2.6 Fiber Protection

The color-code coated fibers shall be surrounded with either loose buffer tubes, channels or other innovative design, or in a tight buffer construction, for protection from external mechanical and environmental influences. The interior of the tube shall be filled with a suitable gel-filling compound to prevent water migration. The loose tube buffering, channel or other innovative design, or tight buffer construction, shall be color coded for the tube identification. The material of the buffering tube shall be PVC, mylar, nylon, or a functionally equivalent material.

2.3.2.7 Tint Requirements

The color concentrates or tints used to color the optical fibers and the buffer tubes shall not be susceptible to migration and chemical reaction with gel-filling compound.

2.3.2.8 Buffer Tubes

The buffer tubes shall be located concentrically around the cable central core member and covered with a black, low or medium density polyethylene inner jacket in accordance with ICEA S-56-434.

2.3.2.9 Filling Compound Requirements

The inner jacket interior and buffer cavity shall contain a gel-type filling compound. The filling compound shall be of suitable viscosity so that it shall protect the optical fibers against the ingress of water and/or soluble chemicals and shall not flow at the temperature of up to 65 degrees C. The gel-filling compound shall be colorless, electrically nonconducting, inert gel-type, waterproof, nontoxic, with no dermal hazards, and compatible chemically and mechanically with all cable components and associated splice hardware materials to which it may make contact. The gel filling shall be removable, as required, using commercially available products under field conditions.

2.3.2.10 Tensile Strength

The cable shall contain a nonconductive central strength member as a well as a layer of aramid type yarn encircling the cable core. The strength member shall provide a maximum pulling load of 1,335 Newtons.

2.3.2.11 Outer Jacket

Black, low or medium density, high-molecular weight, polyethylene materials shall be applied longitudinally over all the inner jacket and sheathing strength member to form the cable outer jacket, in accordance with ICEA S-56-434. The outer jacket shall be smooth, concentric, nonnutrient to fungus, and free from holes, splits, blisters, or other imperfections. The overall outside cable diameter shall not exceed 0.75 inch.

2.3.2.12 Fiber Differentiation

The individual optical fiber shall be easily and positively identified from the buffer tube color code and the optical fiber primary coating color code.

2.3.2.13 Cable Labeling

The outer jacket shall bear the manufacturer's name, year of manufacture, and length marker. The length marking shall employ continuous four- or five-digit number in meters, such as:

Manufacturer's Name - Year XXXX meter

The markings shall be repeated clearly and distinguishably, on every meter on the cable outer jacket. The marking ink shall be fully compatible with the jacket material, nonsmearing, nonwater soluble, abrasion resistant, and durable enough to withstand field handling during placement and subsequent operations.

2.3.2.14 Attenuation

The optical attenuation of each optical fiber in the reeled cable shall be no greater than 1.0 dB/km within a peak emissive region of 850 to 1,300 nm. The attenuation shall be measured on completed cable reel length, and normalized linearly to 1 km. The measurement method shall be in accordance with EIA 455-46.

2.3.2.15 Bandwidth

Each optic fiber within the cable (reeled) shall have its bandwidth measured between 3 dB optical power points, as compared to a reference signal, for a light source with a peak optical emissive region of 850 to 1,300 nm. The effective system bandwidth of at least 1 GHz-km is required. The effective system bandwidth is the bandwidth length product calculated from the measured bandwidth multiplied by the cable length raised to the negative length dependance factor (or gamma factor). Gamma shall be in the range of 0.85 to 0.9. The bandwidth measurement shall be in accordance with EIA 455-5 FOTP-30 frequency domain.

2.3.2.16 Numerical Aperture

The numerical aperture of each optical fiber shall be 0.2 plus or minus 0.02 within an optical emissive region of 850 to 1,300 nm. The method of numerical aperture measurement shall be in accordance with EIA 455-47A.

2.3.2.17 Bending Tolerance

The cable shall be able to withstand bending to a minimum radius of 10 times the cable outer diameter with no tensile load applied, and of 20 times the cable outer diameter with maximum tensile load applied during installation, without damage to cable components or degradation of the optical fiber performance at room temperature.

2.3.2.18 Tensile Load Tolerance

The fiber optic cable shall withstand a pull force of at least 1,780 Newtons, to be applied to the pulling strength member during the installation and a tensile load of at least 300 Newtons during operation without incurring any damage or detriment to fiber optic cable and optical performance. The tensile strength test shall be per EIA 455-5 FOTP-33.

2.3.2.19 Cyclic Flexing Tolerance

The fiber optic cable shall withstand at least twenty bending cycles at minimum bend radius without damage to the fiber optic cable components or degrading optical performance. The cyclic flexing test shall be in accordance with EIA 455-103.

2.3.2.20 Crush Resistance

The minimum crush resistance of the fiber optical cable shall be greater than 650 Newton/cm without damage to cable components or degrading optical performance. The crush resistance test shall be in accordance with EIA 455-41.

2.3.2.21 Impact Resistance

The fiber optic cable shall be capable of withstanding twenty impacts, at a force of 5 Newtons-meters, without damage to cable components, or degradation of optical performance. The impact resistance test shall be in accordance with EIA 455-3 FOTP-25.

2.3.2.22 Gel Compound Temperature Tolerance

The optic cable shall be tested for the ability of the gel-filling compound in the interior of the inner jacket and buffer to resist flow at the temperature range of minus 40 degrees C to 60 degrees C in accordance with EIA 455-81.

2.3.2.23 Fluid Penetration Test

The optic cable shall be capable of preventing the entry and axial migration of 9 psi pressurized water when subjected to fluid penetration testing in accordance with EIA 455-5 FOTP-82.

2.3.2.24 Performance Requirements

The fiber optic cable shall comply with the mechanical performance requirements herein while used in duct applications where the temperature varies minus 20 degrees C to plus 60 degrees C. Optical performance degradation shall be less than 5 percent of the optical performance requirements in the temperature range of minus 20 degrees C to plus 60 degrees C. The fiber optic cable shall not be damaged in storage where the temperature may vary from minus 40 degrees C to plus 65 degrees C.

2.3.2.25 Defects and Imperfections

Fiber optic cables shall be free of material and manufacturing defects, and of dimensional nonuniformities which would seriously impair the functionality of the cables. The fiber optic cables shall also be free from surface imperfections and internal defects which would prevent them from meeting the mechanical and transmission requirements of this specification.

2.4 CONDUIT

Conduit as specified in Section 16415 ELECTRICAL WORK, INTERIOR and Section 16375 ELECTRICAL DISTRIBUTION SYSTEM, UNDERGROUND and as shown shall be furnished.

2.5 INNERDUCT

Innerduct shall be SIDR 11.5 polyethylene plastic pipe conforming to ASTM D 2239.

2.6 CLOSURES

2.6.1 Copper Conductor Closures

2.6.1.1 Underground

The underground closure shall be suitable to house a straight, butt, and branch splice in a protective housing into which can be poured an encapsulating compound. The closure shall be of suitable thermoplastic, thermoset, or stainless steel material supplying structural strength necessary to pass the mechanical and electrical requirements in a vault or manhole environment. The encapsulating compound shall be reenterable and shall not alter the chemical stability of the closure. Filled splice cases shall comply with REA PE-74.

2.6.2 Fiber Optic Closures

2.6.2.1 Underground

The underground closure shall be suitable to house a splicer organizer in a protective housing into which can be poured an encapsulating compound. The closure shall be of suitable thermoplastic, thermoset, or stainless steel material supplying structural strength necessary to pass the mechanical and electrical requirements in a vault or manhole environment. The encapsulating compound shall be reenterable and shall not alter the chemical stability of the closure.

2.7 CABLE SPLICES, CONNECTORS, CABLE ASSEMBLIES, AND ORGANIZERS

2.7.1 Copper Cable Splices

Copper cable splices shall consist of a moisture-resistant, two- or three-wire connector held rigidly in place to assure maximum continuity. The correct connector size shall be used to accommodate the cable gauge of the cable to be supplied. The connectors used shall be listed in REA Bulletin 344-2.

2.7.2 Fiber Optic Cable Splices

Fiber optic cable splices shall consist of a fusion splice where two fibers are thermally fused together forming a continuous fiber length.

2.7.3 Preconnectorized Single-Fiber Cable Assembly

Fiber cable connectors shall be the “ST” type, field installable, self- aligning, and self-centering. The connectors shall be terminated on a 10-foot length of single-fiber cable. The single-fiber cable shall contain a buffered optical fiber of the same type and specification as that used in the multifiber cable.

2.7.4 Fiber Optic Splice Organizer

The splice organizer shall be suitable for housing fiber optic fusionsplices in a neat and orderly fashion. The closure shall allow for a minimum of 1 meter of cable to be neatly stored without kinks or twists. The splice organizer in the closure shall provide individual strain relief for each splice. The case shall be suitable for reentry, if required for future maintenance or modification, without damage to the cable or splices. All required splice organizer hardware, such as splice trays, protective glass shelves, and shield bond connectors shall be provided in the organizer kit.

2.8 MISCELLANEOUS ITEMS

2.8.1 Shield Connectors

Shield connectors shall make a stable, low-impedance electrical connection between the shield of the communications cable and a conductor such as a strap, bar, or wire. The connector shall be made of tin-plated tempered brass. Shield bond connectors shall comply with REA PE-33.

2.8.2 Grounding Braid

Grounding braid shall provide low electrical impedance connections for dependable shield bonding. The braid shall be made from flat tin-plated copper.

PART 3 EXECUTION

3.1 INSTALLATION

All system components and appurtenances shall be installed in accordance with the manufacturer's instructions and as shown. All installation work must be done in accordance with the safety requirements set forth in the general requirements of ANSI C2 and NFPA 70.

3.1.1 Underground Cable

Underground cable installation shall be accomplished in accordance with the requirements set forth in REA TE&CM 644.

For cable installed in ducts and conduit, a cable feeder guide shall be used between the cable reel, and the face of the duct and conduit to protect the cable and guide it into the duct and conduit as it is payed off the reel. As the cable is payed off the reel, it shall be inspected for jacket defects. Precautions shall be taken during installation to prevent the cable from being kinked or crushed. A pulling eye shall be attached to the cable and used to pull the cable through the duct and conduit system. Cable shall be hand fed and guided through each manhole. As the cable is payed off the reel into the cablefeeder guide, it shall be sufficiently lubricated with a type of lubricant recommended by the cable manufacturer. Where the cable is pulled through a manhole, additional lubricant shall be applied at all intermediate manholes. Dynamometers or load-tension instruments shall be used to ensure that the pulling line tension does not exceed the installation tension value specified by the cable manufacturer. The mechanical stress placed upon a cable during installation shall not be such that the cable is twisted or stretched.

3.1.2 Innerduct

Innerduct shall be pulled through the new portion of the duct-manhole system in continuous sections. Splices, joints, couplings, or connections of any type will not be allowed between manholes. Innerduct shall be sealed with polyurethane foam duct seal. This material shall be inserted between the innerduct and the duct. Only one cable shall be installed in a given innerduct. New unoccupied innerducts shall be trimmed leaving 2 inches exposed.

3.1.3 Surge Protection

All cables and conductors, except fiber optic cable, which serve as communication lines through off-premise lines, shall have surge protection installed at each end which meet the requirements of REA PE-60.

3.2 SPLICING

3.2.1 Copper Conductor Splices

Copper conductor cable splicing shall be accomplished in accordance with REA PC-2.

3.2.2 Fiber Optic Splices

Fiber optic splicing shall be in accordance with the manufacturer's recommendation and shall exhibit an insertion loss not greater than 0.2 dB for fusion splices.

3.3 GROUNDING

Except where specifically indicated otherwise, all exposed noncurrent carrying metallic parts of telephone equipment, cable sheaths, cable splices, and terminals shall be grounded.

3.3.1 Ground Bar (GB)

The Contractor shall provide a copper GB in the Hospital communications room which shall be the hub of the basic grounding system providing a common point of connection for ground for outside cable, BDF, and equipment. The Contractor shall establish a GB to ground resistance, including ground, of 10 or less.

3.3.2 Incoming Outside Plant Cables

3.3.2.1 Cable Entrance Ground Bar

The Contractor shall provide a Cable Entrance Ground Bar (CEGB) to which all incoming outside plant cable shields shall be bonded directly. The CEGB shall be a copper ground bar provided for the purpose of terminating incoming telephone cable shields on a common connector point. The CEGB shall be connected to the GB by the most direct route utilizing a copper wire conductor with a total resistance of less than 0.01 ohm.

3.3.2.2 Building Distribution Frame Ground Bar

All shields of cable stubs to connector block shall be bonded to the Building Distribution Frame Ground Bar (BDFB). The BDFB shall be established by the Contractor and shall consist of a copper ground bar at the bottom of the BDF used as the connection point for the cable stub shields to connector blocks and BDF protector assemblies.

3.3.2.3 Shields

The shields of all incoming cables shall not be bonded across the splice to the cable stubs. The shields of the incoming cables shall be grounded in the vault.

3.3.3 Building Distribution Frame Grounding

3.3.3.1 Protection Assemblies

The BDF protector assemblies in the Hospital main communications room shall be mounted directly on the existing telephone backboard. The assemblies shall be connected with a No. 6 AWG copper conductor to provide a low resistance path to the BDFB.

3.3.3.2 GB Connection

The BDFB shall be connected to the GB by a copper wire conductor with a total resistance of less than 0.01 total ohms.

3.3.4 Manholes

The shields of all cables in each manhole shall be bonded together by a bonding wire or ribbon. At intermediate manholes where the cable is pulled through without a sheath opening, bonds are not required. If the manhole has a lacerating bonding ribbon, the shields of cable shall be attached to it.

3.4 ACCEPTANCE TESTS

The Contractor shall provide all personnel, equipment, instrumentation, and supplies necessary to perform all required testing. Notification of any planned testing shall be given to the Contracting Officer at least 14 days prior to any test, and in no case shall notice be given until after the Contractor has received written Contracting Officer approval of the test plans as specified. The test plans shall define all the tests required to ensure that the system meets technical, operational, and performance specifications. The test plans shall define milestones for the tests, equipment, personnel, facilities, and supplies required. The test plans shall identify the capabilities and functions to be tested.

3.4.1 Copper Conductor Cable

The following acceptance tests shall be performed in accordance with REA PC-4:

a. Shield continuity.

b. Conductor continuity.

c. Conductor insulation resistance.

d. Structural return loss.

e. Shield ground for single jacketed cables.

f. DC loop resistance.

3.4.2 Fiber Optic Cable

Three optical tests shall be performed: Optical Time Domain Reflectometry (OTDR) Test, Attenuation Test, and Bandwidth Test. These tests shall be performed on the completed end-to-end spans which include the near-end preconnectorized single-fiber cable assembly, outside plant as specified, and the far-end preconnectorized single-fiber cable assembly. The following acceptance tests shall be performed for each fiber in the completed cable length. Single-mode fibers do not require Bandwidth Test.

3.4.2.1 OTDR Test

The OTDR test shall be used to determine the adequacy of the cable installations. The OTDR tests will show any irregularities, such as discontinuities, microbendings, improper splices, for the cable span under test. Hardcopy fiber signature records shall be obtained from the OTDR for each fiber in each span and shall be included in the test results. The OTDR test shall be measured in both directions. A reference length of fiber, 1 km minimum, used as the delay line shall be placed before the new end connector and after the far end patch panel connectors for inspection of connector signature.

3.4.2.2 Attenuation Test

End-to-end attenuation measurements shall be made on all fibers, in both directions, using a 1,300-nanometer light source at one end and the optical power meter on the other end. These tests will be used to verify that the cable system attenuation requirements are met.

End Of Section

SECTION TABLE OF CONTENTS

DIVISION 16 - TONE/VISUAL NURSE CALL SYSTEMS

SECTION 16750

TONE/VISUAL NURSE CALL SYSTEMS

PART 1 GENERAL

1.1 REFERENCES
1.2 GENERAL REQUIREMENTS
1.2.1 Standard Products
1.2.2 UL 1069 Listing
1.2.3 Identical Items
1.2.4 Nameplates
1.2.5 Verification of Dimensions
1.3 CONTRACTOR QUALIFICATIONS
1.4 MANUFACTURER QUALIFICATIONS
1.5 SUBMITTALS
1.6 SYSTEM DESCRIPTION
1.6.1 Functional Capability
1.7 PERFORMANCE REQUIREMENTS
1.7.1 System Calls
1.7.2 Dome Lights
1.8 DELIVERY AND STORAGE
1.8.1 Protection
1.8.2 Contractor Responsibility

PART 2 PRODUCTS

2.1 GENERAL
2.1.1 Standard Products
2.1.2 Identical Items
2.1.3 Nameplates
2.1.4 Model and Enhancements
2.1.5 Electromagnetic Interference (EMI)
2.1.6 Continuous Duty Design
2.1.7 Power Supplies and Batteries
2.1.8 General Requirements
2.2 STATION FEATURES
2.3 DOME LIGHT FEATURES
2.4 MAIN TERMINAL/EQUIPMENT PANEL FEATURES

PART 3 EXECUTION

3.1 PREPARATIONS
3.2 INSTALLATION
3.2.1 General
3.2.2 Cabling
3.3 GROUNDING
3.4 ACCEPTANCE TESTS
3.4.1 Contractor Responsibility
3.4.2 Conduct of Acceptance Tests
3.4.3 System Operating Mode
3.4.4 Battery Tests

3.5 TRAINING
3.5.1 General Preparations
3.5.2 Courses
3.5.3 Technician Training
3.5.4 User Staff Training
3.5.5 Training Sessions
3.5.6 Instructions

-- End of Section Table of Contents --

SECTION 16750

TONE/VISUAL NURSE CALL SYSTEMS

PART 1 GENERAL

1.1 REFERENCES

The publications listed below form a part of this specification to the extent referenced. The publications are referred to in the text by basic designation only.

FEDERAL COMMUNICATIONS COMMISSION (FCC)

FCC Part 15	(Jul 1986) Rules and Regulations: Radio Frequency Devices

INSTITUTE OF ELECTRICAL AND ELECTRONIC ENGINEERS, INC. (IEEE) STANDARD

IEEE 587	(1980) Guide for Surge Voltages in Low Voltage AC Power Circuits

NATIONAL FIRE PROTECTION ASSOCIATION (NFPA) PUBLICATIONS

NFPA 70	(1996) National Electrical Code

UNDERWRITERS LABORATORIES, INC. (UL) PUBLICATIONS

UL 1069	(May 1989) Hospital Signaling and Nurse Call Equipment

1.2 GENERAL REQUIREMENTS

1.2.1 Standard Products

Materials and equipment shall be the standard products of a manufacturer regularly engaged in the manufacture of such products who meets the qualification requirements specified herein. Equipment shall be supported by a service organization that can provide service within 1 to 2 hours of notification.

1.2.2 UL 1069 Listing

All system components necessary to provide basic nurse call functions required by regulatory codes shall be listed under UL 1069. Ancillary components interconnected with the systems to enhance functions shall be isolated in accordance with UL 1069 and shall not in any way defeat the UL 1069 listing.

1.2.3 Identical Items

All items of the same classification shall be identical. This requirement includes equipment, assemblies, parts, and components.

1.2.4 Nameplates

Nameplates with manufacturer's name and equipment model and serial number shall be secured to each item of equipment.

1.2.5 Verification of Dimensions

The Contractor shall become familiar with the details of the work and working conditions, shall verify dimensions in the field, and shall advise the Contracting Officer of any discrepancies before performing the work.

1.3 CONTRACTOR QUALIFICATIONS

The Contractor shall submit verification of the qualifications specified below with the shop drawings submittals.

The Contractor shall have the following qualifications in Nurse Call Systems:

a. A minimum of 5 years experience in the application and installation of this type of system and equipment.

b. Factory trained personnel to perform systems engineering and design, installation, testing, training, maintenance and repair service.

1.4 MANUFACTURER QUALIFICATIONS

The Contractor shall submit verification of the qualifications specified below with the shop drawings submittals.

The manufacturer shall have a minimum of 5 years experience in producing the types of systems and and equipment specified and shall guarantee parts availability for a minimum of 7 years from date of system acceptance by the Contracting Officer.

1.5 SUBMITTALS

Government approval is required for submittals with a "GA" designation; submittals having an "FIO" designation are for information only. The following shall be submitted in accordance with Section 01300 SUBMITTALS:

SD-01 Data

Design Analysis and Calculations; FIO.

Design analysis for the entire system shall be submitted. In addition, supporting calculations performed to show basis of power supply selection for each system shall be submitted.

Manufacturer's Catalog Data; FIO.

Data composed of manufacturer's catalog cuts, brochures, circulares, specifications and product data, and other information in sufficient detail and scope to verify compliance with requirements of the contract documents shall be submitted. This shall include a description of the system operating characteristics and individual data sheets for each item of equipment indicating descriptive and technical data, operating temperature limits, heat dissipated, electrical requirements and mounting restrictions. If a data sheet covers several types or sizes of equipment, the sheet shall be marked to indicate the specific item provided.

Spare Parts Data, FIO.

The Contractor shall furnish spare parts data for each different item of material and equipment specified.

Refer to Specification Section 01700, Operation and Maintenance Data for specific requirements.

SD-04 Drawings

Tone/Visual Nurse Call Systems; GA;

Detail drawings shall be submitted and shall consist of complete riser diagrams, wiring and schematic diagrams, run

sheets including number of conductors and wire number (ID), custom assembly details, installation details, and any other details required to demonstrate that the total system has been coordinated and shall properly function as a unit.

Installation details shall include layout and anchorage of equipment and appurtenances, mounting details, and equipment relationship to other parts of the work including clearances required for maintenance and operation. Elevation or plan showing physical location and dimensions of each individual component shall be provided.

Custom assembly drawings shall indicate configuration and dimensional details including drawings of panels, racks, cabinets, and consoles.

After installation is complete, systems drawings showing final systems configuration shall be submitted.

As-Built Drawings; FIO.

The Contractor shall maintain a separate set of drawings, elementary diagrams and wiring diagrams to be used for "as-built" drawings. This set shall be accurately kept up to date by the Contractor with all changes and additions and shall be delivered to the Contracting Officer with the final endurance test report. In addition to being complete and accurate, this set of drawings shall be kept neat and shall not be used for installation purposes. Upon completion of the as-built drawings, the Contracting Officer will review the as-built work with the Contractor. If the as-built work is not complete, the Contractor will be so advised and shall complete the work as required. Final drawings submitted with the endurance test report shall be finished drawings on mylar or vellum and in electronic form on AutoCad V.12 or later.

SD-07 Schedules

Material and Equipment Lists; FIO.

A complete list of material and equipment to be incorporated in the work shall be submitted. The list shall be arranged in the order of the specification and include the specification article number, the name, model and manufacturer for each item, and a reference to the manufacturer's data sheet for the item.

SD-08 Statements

Qualifications; FIO.

The Contractor shall submit the qualifications of both the Contractor and the Manufacturer(s) of the systems to perform the work specified in this specification section. This includes the qualifications specified herein for both the Contractor and Manufacturer.

SD-09 Reports

Quality Assurance Plan; FIO.

The Contractor shall provide the Contracting Officer a quality assurance plan conforming to SECTION 01440 - CONTRACTOR QUALITY CONTROL. The plan shall incorporate the three phase inspection system and shall include a complete detailed acceptance test.

Test plans and test procedures shall be submitted for site tests for approval. The test plans and test procedures shall explain in detail, step-by-step actions and the expected results to demonstrate compliance with the requirements of this specification, and the methods for simulating the necessary conditions of operation to demonstrate performance of the systems.

Test plans shall include a list of all test equipment to be used, test data sheets, and names and qualifications of the person(s) that will be performing the tests.

Test plan documentation for the site test shall be submitted to the Contracting Officer for approval 30 days prior to the site tests.

Test Reports; FIO.

Upon completion and testing of the installed systems, test reports shall be submitted in booklet form showing all field tests performed to adjust each component and to prove compliance with the specified performance criteria. Each test report shall indicate the final position of controls and operating mode of the system, and the manufacturer, model number, and serial number of the test equipment in each test.

SD-13 Certificates

Training Data; FIO.

Information describing training to be provided, training aids to be used, samples of training materials to be provided, and schedules of training.

Installation Procedures; FIO.

Where installation procedures, or any part thereof, are required to be in accordance with the recommendations of the manufacturer of the material or equipment being installed, printed copies of these recommendations shall be forwarded to the Contracting Officer prior to the installation. Installation of the item will not be allowed to proceed until the recommendations are received and approved.

Certificates of Compliance; FIO.

Where materials or equipment are specified to conform to the standards or publications, and requirements of FCC, IEEE, NFPA, or UL, the Contractor shall submit proof that the items furnished under this section of the specification conform to the specified requirements.

SD-19 Operation and Maintenance Manuals

Tone/Visual Nurse Call systems; FIO.

The Contractor shall submit six operation and maintenance manuals for the systems and equipment furnished. Operating manuals shall detail the step-by-step procedures required for system startup, operation and shutdown.

The Contractor shall furnish six sets of maintenance instructions listing routine maintenance procedures, possible breakdowns and repairs, and troubleshooting guide for the systems and equipment furnished.

Refer to Specification Section 01700, Operation and Maintenance Data for specific requirements.

1.6 SYSTEM DESCRIPTION

1.6.1 Functional Capability

The TVNC System provides simultaneous tone and light signaling of calls for emergency assistance from designated spaces and toilets in the Hospital Alteration.

1.7 PERFORMANCE REQUIREMENTS

1.7.1 System Calls

All calls on the TVNC System shall be classified as emergency calls. An emergency call is initiated by pulling a cord attached to the emergency pull cord station. This shall cause the following events to occur until the call is canceled at the originating station:

Dome light with electronic tone device outside room or cubicle shall illuminate and the chime shall sound. Dome lights shall be red.

1.7.2 Dome Lights

All visual signals shall remain activated until cancelled at the originating station.

1.8 DELIVERY AND STORAGE

1.8.1 Protection

All equipment delivered and placed in storage shall be stored with protection from the weather, humidity and temperature variation, dirt and dust, or other contaminants.

1.8.2 Contractor Responsibility

The Contractor shall be responsible for all handling and control of equipment provided under this contract.

PART 2 PRODUCTS

2.1 GENERAL

2.1.1 Standard Products

Material and equipment to be provided shall be the standard commercial-off-the-shelf (COTS) products of a manufacturer regularly engaged in the manufacture of such products, and shall essentially duplicate material and equipment that have been in satisfactory use at least 1 year. All components used in the system shall be commercial designs that comply with the requirements specified. Equipment shall be supported by a service organization that is, in the opinion of the Contracting Officer, reasonably convenient to the site.

2.1.2 Identical Items

Items of the same classification shall be identical. This requirement includes equipment, modules, assemblies, parts, and components.

2.1.3 Nameplates

Each major component of equipment shall have the manufacturer's name, model, and serial number on a plate secured to the equipment. Also, all compliance with regulatory requirements, such as UL label and FCC regulations, shall be indicated on the nameplate or on adjacent labels.

2.1.4 Model and Enhancements

System and component equipment shall be manufacturer's latest model, design, version, and quality in production at time of delivery and installation.

Any product hardware or software enhancement that becomes available after delivery and installation and up to time of system acceptance shall be brought to the Contracting Officer's attention upon announcement by the manufacturer and shall be made available to the Contracting Officer. If such enhancements customarily are provided at no additional cost, the Government shall automatically be entitled to said enhancements. If such enhancements customarily are provided at additional cost, the Contracting Officer has the option to accept or reject such enhancements.

The Contractor shall submit a letter to the Contracting Officer from the Manufacturer guaranteeing that the Manufacturer shall inform the Government of, and make available to the Government, all commercially available enhancements to the system or software at the then current price. Include the letter with shop drawings submittals.

The Contractor may make substitutions, modifications, or improvements to a system hardware and software, provided that such substitution, modifications, or improvements shall not affect performance or operation of the system. No such substitutions, modifications, or improvements are to be made without the written consent of the Manufacturer and

Contracting Officer. Such consent shall not be unreasonably withheld or delayed.

2.1.5 Electromagnetic Interference (EMI)

Within the normal hospital and clinic environment, installed systems shall not generate nor be susceptible to any harmful electromagnetic emission, radiation, or induction which degrades, obstructs, or interrupts the operation of the installed systems, and any computer system, life safety system, or patient monitoring system in the facility.

Installed systems shall conform to the EMI standards specified in FCC rules and regulations, Part 15, for EMI caused by computing devices.

In the event that any part of the system is subject to FCC technical standards different than those set forth herein, including without limitation the requirement that computing devices marketed for use in a business or industrial environment be certified by the FCC to comply with the Class B limit of the FCC's Rules, such FCC standards shall apply in lieu of those set forth herein.

In the event that, at the time of system acceptance testing, the applicable FCC technical standards shall differ from those set forth above, a system as installed shall conform to such then applicable FCC technical standards.

In the event of a breach of the representations and warranties contained herein, the Contractor shall, at their own expense, take all measures necessary to put the offending system into compliance with the applicable FCC technical standards.

2.1.6 Continuous Duty Design

All equipment shall be designed for 24 hours per day, 365 days per year continuous duty.

2.1.7 Power Supplies and Batteries

Power supplies shall provide sufficient power capacity for the nurse call system equipped to its maximum capacity with all possible call indicators activated concurrently without any loss or perceptible degradation of signal quality.

AC powered equipment shall operate per specifications over the range of 105V to 130V, 60 Hz, unless otherwise noted.

All equipment connected to ac circuits shall be protected from power line surges. Equipment protection shall meet the requirements of IEEE 587-1980. Fuses shall not be used for surge protection.

Power distributed over system cables shall be low voltage and power limited in accordance with NFPA 70-1996 and UL 1069.

All batteries shall be maintenance free type with sealed cells. Batteries shall maintain TVNS at 1/2 maximum current draw for 4 hours.

2.1.8 General Requirements

Modification of products which nullifies UL label or other agency approval is not permitted. All products shall be adequately shielded and grounded. All products shall be new and free of defects. All products required for proper operation of the system shall be provided, even if not specified or indicated. Tone signal level shall be adjustable on all stations, but not below discernable level. All stations, except for corridor and zone lights, shall plug into network cabling. Hardwired stations are not acceptable.

2.2 STATION FEATURES

All stations shall be flush mounted. A call switch and a call cancel switch shall be provided on each call station. Call switch shall be activated by a pull cord. Refer to 1.8.1 for performance requirements.

2.3 DOME LIGHT FEATURES

Dome lights shall be wall or ceiling mounted units with one lamp and electronic tone device. Electronic tone device may be integral to the dome light or mounted as a separate unit.

The dome lens covers shall be shatterproof, heat resistant, and snap on and off for changing of lamps without the use of tools. Lens cover shall not deform, yellow, or craze with use or age.

2.4 MAIN TERMINAL/EQUIPMENT PANEL FEATURES

Terminal/equipment cabinets shall be surface mounted with knockouts and a hinged door with keyed lock. Equipment shall provide control, switching, memory, timing, signaling, and power circuitry as required for system operation. Equipment shall be of modular construction with all components as plug-in modules. Systems shall operate at or below 30V level. Overload and electronic short circuit protection for primary and secondary circuits shall be provided. The equipment shall be installed in the communications room.

Interruption or loss of AC power, or the failure of a power supply shall not cause loss of any call registered prior to loss of power. When power is restored, all normal operations shall continue and all registered calls and associated signals shall be automatically restored.

Battery backup shall automatically provide at least 30 minutes of full power within 4 to 10 milliseconds of an AC power failure. Power requirement calculations shall be included with shop drawing submittal to verify power requirements.

PART 3 - EXECUTION

3.1 PREPARATIONS

Contractor shall coordinate with, and obtain approval from, the Contracting Officer for the following:

3.2 INSTALLATION

3.2.1 General

All work shall be accomplished as indicated and specified, and in accordance with acknowledged industry and professional standards and practices, and manufacturers recommendations.

During the entire installation the Contractor shall maintain on-site a competent supervisor and supporting technical staff acceptable to the Contracting Officer.

Coordinate all efforts with those of related trades. In the event of any conflicts, delayed or improper preparatory work by others, notify the Contracting Officer; the Contracting Officer decision shall be binding. The Contractor shall provide all tools and equipment needed to install the system and shall provide adequate quantities of installation spares on-site to preclude work stoppages and to meet other contingencies that might arise prior to final acceptance of the system.

The Contractor shall verify all field conditions

All equipment and installations in wet areas (showers, tub rooms, etc) shall be waterproofed and designed for the application.

3.2.2 Cabling

Cabling shall be installed in conduit and boxes specified in SECTION: 16415 ELECTRICAL WORK, INTERIOR. Fill in conduits shall not exceed 40 percent.

System cabling shall be in accordance with NFPA 70. Where multiconductor or coaxial cable is used, installation, cabling and connections shall be in accordance with manufacturer's instructions and diagrams. Cables shall be installed without kinks, sharp bends or deformations, in a manner to prevent abrasion.

3.3 GROUNDING

All grounding practices shall comply with NFPA 70-1996 NEC.

Equipment enclosures and all other noncurrent carrying metal parts of electric equipment shall be grounded.

3.4 ACCEPTANCE TESTS

3.4.1 Contractor Responsibility

The Contractor is responsible for providing all personnel, equipment, instrumentation, and supplies necessary to perform all testing. Notification of any planned testing shall be given to the Contracting Officer at least 15 days prior to any test, and in no case shall notice be given until after the Contractor has received written Government approval of the test plans and procedures as specified.

3.4.2 Conduct of Acceptance Tests

After installation has been completed, Contractor shall conduct acceptance tests, utilizing the approved test procedures, to demonstrate that equipment operates in accordance with specification requirements. Tests shall include but not be limited to those outlined below.

3.4.3 System Operating Mode

The system shall be demonstrated to function as specified by operation of each individual system component under simulated normal system loading.

3.4.4 Battery Tests

Contractor shall demonstrate battery operation by disconnecting primary power from TVNC system during the acceptance test. Not to exceed 4 hours.

3.5 TRAINING

3.5.1 General Preparations

The Contractor shall provide one or more qualified people to inspect, adjust and to place the system into full operation just prior to training the staff.

3.5.2 Courses

Contractor shall conduct two types of training courses, including one operations and maintenance course for technicians who shall maintain the system, and a course to train all user staff in the use of the system. All courses shall take place on-site at a location and at times provided by the Contracting Officer.

3.5.3 Technician Training

After acceptance inspection and before placing the equipment in operation, the Contractor shall provide training for technicians. The training course shall provide at least 8 hours of instruction covering all aspects of system programming, operations and maintenance. The Contracting Officer will determine the number of technicians to attend the course.

3.5.4 User Staff Training

At a time acceptable to the Contracting Officer, after the system is complete and near the time when the facility is opened for business, the Contractor shall conduct classes for the staff that will use the system. Classes shall be about 30 minutes of instruction covering proper use of the system.

3.5.5 Training Sessions

Training sessions must be coordinated with the Contracting Officer.

3.5.6 Instructions

Instructions shall cover all of the items contained in the operating and maintenance instructions, as well as demonstrations of routine maintenance operations.

End Of Section

SECTION TABLE OF CONTENTS

DIVISION 16 - PUBLIC ADDRESS AND PROGRAM DISTRIBUTION SYSTEMS

SECTION 16770

PUBLIC ADDRESS AND PROGRAM DISTRIBUTION SYSTEMS

PART 1 GENERAL

1.1 REFERENCES
1.2 SYSTEM DESCRIPTION
1.2.1 Public Address
1.2.2 Program Distribution
1.2.3 System Performance
1.3 SUBMITTALS
1.4 DELIVERY AND STORAGE
1.5 VERIFICATION OF DIMENSIONS

PART 2 PRODUCTS

2.1 STANDARD PRODUCTS
2.1.1 Identical Items
2.1.2 Nameplates
2.2 PAGING CONTROL STATIONS
2.3 DC POWER SUPPLIES
2.4 MICROPHONES
2.5 LOUDSPEAKERS
2.5.1 Ceiling Speakers
2.6 LINE COMBINING/DIVIDING
2.6.1 Line Combiners
2.7 FM EQUIPMENT
2.7.1 FM Tuner
2.7.2 FM Antenna
2.8 MIXER/POWER AMPLIFIERS
2.9 COMPACT DISC PLAYER
2.10 CASSETTE TAPE EQUIPMENT
2.11 PRIORITY RELAYS
2.12 VOLUME CONTROLS
2.13 EQUIPMENT RACK
2.14 CABLE
2.15 POWER SURGE PROTECTION
2.16 SIGNAL SURGE PROTECTION

PART 3 EXECUTION

3.1 INSTALLATION
3.1.1 Wiring
3.2 GROUNDING
3.3 ACCEPTANCE TESTS
3.4 TRAINING

-- End of Section Table of Contents --

SECTION 16770

PUBLIC ADDRESS AND PROGRAM DISTRIBUTION SYSTEMS

PART 1 GENERAL

1.1 REFERENCES

The publications listed below form a part of this specification to the extent referenced. The publications are referred to in the text by basic designation only.

ELECTRONIC INDUSTRIES ASSOCIATION (EIA)

EIA 310-C (Nov 1977; R 1982) Racks, Panels and Associated Equipment

NATIONAL FIRE PROTECTION ASSOCIATION (NFPA)

NFPA 70 (1996) National Electrical Code

1.2 SYSTEM DESCRIPTION

The public address and program distribution system shall consist of an audio distribution network to include mixer/power amplifiers, paging control station, program sources, speakers, cabling, and any ancillary components required to meet the required system configuration and operation.

1.2.1 Public Address

The system shall include components and accessories, including zone selection equipment required to output public address announcements through selected portions of the audio distribution network as indicated. The paging signal shall override the background music, when the paging function is activated in designated areas. Zoning capability shall permit paging into seperate areas, as well as an all page zone group.

1.2.2 Program Distribution

The system shall provide one channel of entertainment from any of three sources for distribution over an audio network to waiting, exercise,selected rooms and to loudspeakers as indicated. The system shall include antenna, FM radio tuner, compact disc player, audio cassette recorder, source selection, and all accessories required.

1.2.3 System Performance

The system shall provide even sound distribution throughout the designated area, plus or minus 3 dB for the 1-octave band centered at 4000 Hz. The system shall provide uniform frequency response throughout the designated area, plus or minus 3 dB from 200 to 2000 Hz as measured with 1/3-octave bands of pink noise at locations across the designated area selected by the Contracting Officer. 75 dBA page level, and 65 dBA average program level with additional 10 dB peaking margin sound pressure level (SPL) to any location in the covered area at an acoustic distortion level below 5 percent total harmonic distortion (THD) and minimum signal-to-noise ratio of 70 dBA. Unless otherwise specified the sound pressure reference level is 20 micro Paschal (0.00002 Newtons per square meter).

1.3 SUBMITTALS

Government approval is required for submittals with a "GA" designation; submittals having an "FIO" designation are for information only. The following shall be submitted in accordance with Section 01300 SUBMITTAL DESCRIPTIONS:

SD-01 Data

Spare Parts Data; FIO.

The Contractor shall furnish spare parts data for each different item of material and equipment specified.

Refer to specification Section 01700, Operation and Maintenance Data for specific requirements.

SD-04 Drawings

Detail Drawings; FIO

Detail drawings and data consisting of a complete list of equipment and material, including manufacturer's descriptive and technical literature, performance charts and curves, and installation instructions. Detail drawings shall also contain complete wiring and schematic diagrams and any other details required to demonstrate that the system has been coordinated and will properly function as a unit. Drawings shall show proposed layout of equipment and appurtenances, and equipment relationship to other parts of the work including clearances for maintenance and operation.

As-Built Drawings; FIO

The Contractor shall maintain a separate set of drawings, elementary diagrams and wiring diagrams of the public address and program distribution systems to be used for "as-built" drawings. This set shall be accurately kept up to date by the Contractor with all changes and additions to the public address and program distribution systems and shall be delivered to the Contracting Officer with the final endurance test report. In addition to being complete and accurate, this set of drawings shall be kept neat and shall not be used for installation purposes. Upon completion of the as-built drawings, the Contracting Officer will review the as-built work with the Contractor. If the as-built work is not complete, the Contractor will be so advised and shall complete the work as required. Final drawings submitted with the endurance test report shall be finished drawings on mylar or vellum.

SD-09 Reports; FIO

Quality Assurance Plan; FIO

Test plan and test procedures for the acceptance tests. The test plan and test procedures shall explain in detail, step-by-step actions and expected results to demonstrate compliance with the requirements specified. The procedure shall also explain methods for simulating the necessary conditions of operation to demonstrate system performance.

Test Reports; FIO.

Test reports in booklet form showing all field tests performed to adjust each component and to prove compliance with the specified performance criteria, upon completion and testing of the installed system. The reports shall include the manufacturer, model number, and serial number of test equipment used in each test. Each report shall indicate the final position of controls and operating mode of the system.

SD-19 Operation and Maintenance Manuals

PUBLIC ADDRESS AND PROGRAM DISTRIBUTION SYSTEMS; FIO

The Contractor shall submit six operation and maintenance manuals for the systems and equipment furnished. Operating manuals shall detail the step-by-step procedures required for system start-up, operation and shut down.

The Contractor shall furnish six maintenance instructions listing routine maintenance procedures, possible breakdowns and repairs, and troubleshooting guides for the systems and equipment furnished.

Refer to specification Section 01700, Operation and Maintenance Data for specific requirements.

1.4 DELIVERY AND STORAGE

Equipment placed in storage until installation time shall be stored with protection from the weather, humidity and temperature variations, dirt and dust, and other contaminants.

1.5 VERIFICATION OF DIMENSIONS

The Contractor shall become familiar with the details of the work and working conditions, shall verify dimensions in the field, and shall advise the Contracting Officer of any discrepancies prior to purchasing equipment or performing any work.

PART 2 PRODUCTS

2.1 STANDARD PRODUCTS

Material and equipment to be provided shall be the standard products of a manufacturer regularly engaged in the manufacture of such products, and shall essentially duplicate material and equipment that have been in satisfactory use at least 2 years. All components used in the system shall be commercial designs that comply with the requirements specified. Equipment shall be supported by a service organization that is, in the opinion of the Contracting Officer, reasonably convenient to the site.

2.1.1 Identical Items

Items of the same classification shall be identical. This requirement includes equipment, modules, assemblies, parts, and components.

2.1.2 Nameplates

Each major component of equipment shall have the manufacturer's name, address, model and catalog number, and serial number on a plate secured to the equipment.

2.2 PAGING CONTROL STATIONS

Modular assembly metal faceplate with buttons, indicators, and inputs as follows:

a. Push-to-talk button.

b. 4 buttons assignable to individual zone or zone group selection.

c. LEDs to indicate the individual zone or zone group in which an announcement is being made.

d. Transformer isolated microphone input.

e. DC powered from external power supply.

f. Desk top unit.

2.3 DC POWER SUPPLIES

a.	Input:	120V ac.
b.	Output:	27V dc at 12 amperes.

c. Ripple at full load: less than 2.5%

d. Regulation 0 to full load: 29 to 23V.

e. Pilot lamp.

f. Wall mountable.

2.4 MICROPHONES

Microphones shall be compatible with paging control station and shall, as a minimum conform to the following specifications:

a. Application: Desk

b. Element: Dynamic

c. Frequency Response: 50 - 12,000 Hz

d. Impedance: 250 ohms (nominal)

e. Front-to-back Ratio: 20 dB at 1000 Hz

f. Quantity: 1 for each microphone station

2.5 LOUDSPEAKERS

2.5.1 Ceiling Speakers

The ceiling speaker shall as a minimum conform to the following specifications:

a. Application: Ceiling, flush mount

b. Speaker size: 8", nominal

c. Frequency response: 100 to 10,000 Hz, ±3 dB

d. Power Rating: Normal - 7 watts

e. Voice Coil Impedance: 8 ohms

f. Sensitivity: 96 dB at 1m with 1 watt input

g. Magnet: 8 ounces or greater

h. Line Matching Transformer Type: 70 volt line

i. Transformer Primary Taps: 0.5, 1, 2 and 4 watts

j. Transformer Frequency Response: 50 - 15,000 Hz, ±1 dB

k. Transformer Insertion Loss: Less than 1 dB

m. Enclosure: Cylindrical metal backbox, minimum 7" deep with fiberglass lining, and compatible screw mounted perforated metal baffle with white powder epoxy finish.

Suspended application: Cylindrical aluminum housing, minimum 9" deep with fiberglass lining, hardware for mounting to a standard 4" octagonal electrical outlet box, and compatible screw-mounted perforated metal baffle with white finish.

2.6 LINE COMBINING/DIVIDING

2.6.1 Line Combiners

Line combiners shall allow active combining of stereo signals into mono signals and shall at a minimum conform to the following specifications:

a. Input impedance: 15000 ohms, minimum.

b. THD: <.05% at +4 dBu, 20 to 20 kHz.

c. Frequency response: ±1 dB, 20 to 20 kHz.

d. Gain: adjustable to achieve nominal +4 dBu output.

e. Output impedance: 400 ohms, maximum.

f. Noise: >75 dB below +4 dBu output, 20 to 20 kHz.

2.7 FM EQUIPMENT

2.7.1 FM Tuner

Tuner shall receive FM signals only, shall be wall-mounted and shall as a minimum conform to the following characteristics:

a. Tuning Range: FM - 88 to 108 MHz

b. Selectivity: 60 dB on FM

c. Sensitivity: FM - 1.5 microvolts

d. Capture Ratio: 1.0 dB

e. Power Requirement: 110-125 Vac, 60Hz

2.7.2 FM Antenna

The FM antenna shall be suitable for FM reception and shall cover all frequency bands specified for radio tuners. The system shall be furnished complete with a transformer, insulators, crossover insulator, 75 ohm coaxial cable of proper length, lightning arresters, coupling transformer and divider network at the radio tuners. Attenuation of the coaxial cable span between the antenna and amplifier shall not exceed 2.5 dB at 108 MHz.

2.8 MIXER/POWER AMPLIFIERS

Mixer/power amplifiers shall have minimum 6 inputs, bass and treble tone controls, integral compressor, shall allow priority channel assignment and, as a minimum, conform to the following specifications:

a. Rated power output: RMS power output as indicated on the Drawings

b. Frequency Response: Plus or Minus 2 dB at RPO, 20-20,000 Hz, low impedance output

c. Distortion: Less than 1 percent at RPO, 20-20,000 Hz, low impedance output

d. Input Impedance: 50 k ohm unbalanced

e. Noise: -90 dBA at RPO

f. Output voltage: 70.7 volts

g. Power Requirement: 110-125 Vac 60 Hz

2.9 COMPACT DISC PLAYER

Player shall have three beam laser pickup, dual Digital-to-Analog converters, and programmable playback modes. Player shall have capability to play up to 12 discs automatically via a magazine type changer. Player shall have the capability to play selections in a random order and, after all selections have been played, to reshuffle and play all selections in a different order to provide continuous playback. Player shall be rack mountable. Player shall as a minimum conform to the following:

a. Frequency Response: 10 - 20,000 Hz Plus or Minus 1 dB

b. Signal-to-Noise: Minimum of 100 dB

c. Dynamic Range: Minimum of 96 dB

d. Output: Nominal +4 dBu, or nominal -10 dBu with external preamplifier to provide +4 dBu, balanced

d. Total Harmonic Distortion: Maximum of 0.007% at 1 kHz

e. Channel Separation: Minimum 90 dB at 1 kHz

f. Quantization: Minimum of 16 Bits Linear per channel

g. Conversion Rate: Minimum 4 x Oversampling

h. Disc Size: 5 inch and 3 inch

2.10 CASSETTE TAPE EQUIPMENT

The dual cassette tape play deck shall be rack mountable and shall as a minimum conform to the following specifications:

a. Frequency Response: Plus or minus 3 dB, 30 - 15,000 Hz at OVU

b. Wow and Flutter: Less than 0.09 percent WRMS

c. Signal-to-Noise: 45 dB at 1000 Hz at rated output

d. Output: Nominal +4 dBu, or nominal -10 dBu with external preamplifier to provide +4 dBu, balanced

e. Distortion: 1.3 percent

f. Play Head: Hard Parmalloy

g. Operation: Automatic Reverse

h. Power Requirements: 110-125 Vac, 60 Hz

2.11 PRIORITY RELAYS

Priority relays required to accomplish operations specified shall be provided. Relays shall be completely enclosed with a plastic dust cover for maximum protection against foreign matter. Relays shall be provided with a diode wired across the relay coil for transient suppression and shall be installed utilizing factory-prewired, rack-mounted receptacle strips. Coil shall be maximum 24 volts dc.

2.12 VOLUME CONTROLS

Loudspeakers in designated rooms shall be provided with a volume control rotating knob as indicated on the drawings. The control shall be mounted at location and height above the floor as shown and in accordance with Section 16415 ELECTRICAL WORK, INTERIOR. The volume control shall be of the auto transformer type. In zones designated for paging and music, the paging signal shall override controls via integral priority relays. Each device plate shall be satin-finished, corrosion-resisting steel permanently marked to indicate the volume selected.

2.13 EQUIPMENT RACK

Equipment rack shall be three-section hinged type of minimum 16 gauge steel construction. The rack shall be enclosed with ventilated side panels. Rack shall be configured for standard 19" mounting in accordance with EIA-310-C and located as shown on the Drawings. Minimum rack height shall be 45". The rack shall have a lockable front door and shall be factory finished with a uniform backed enamel or powder paint over rust inhibiting primer.

2.14 CABLE

Cables shall be of the gauge required depending upon the cable length. Cable loss shall not exceed 1.0 dB for the entire cable run. In no case shall any cable be used which is smaller than 20 AWG. Insulation on the conductors shall be polyvinyl chloride (PVC) or an equivalent synthetic thermoplastic not less than .009 inch. Cables, except speaker cables, shall be shielded with a 34-gauge tinned soft copper strand formed into a braid. Cables shall be jacketed with a PVC compound. The jacket thickness shall be 0.0200 inch minimum.

2.15 POWER SURGE PROTECTION

Major components of the system shall have a device, whether internal or external, which provides protection against voltage spikes and current surges originating from commercial power sources.

2.16 SIGNAL SURGE PROTECTION

Major components of the system shall have internal protection circuits which protects the component from mismatched loads, direct current, and shorted output lines.

PART 3 EXECUTION

3.1 INSTALLATION

All equipment shall be installed as indicated and specified, and in accordance with the manufacturer's recommendations except where otherwise indicated.

3.1.1 Wiring

Wiring shall be installed in rigid conduit, intermediate metal conduit, or electric metallic tubing as specified in Section 16415 ELECTRICAL WORK, INTERIOR. Wiring for microphone, grounding, line level, speaker and power cables shall be isolated from each other by physical isolation and metallical shielding. Shielding shall be terminated at only one end.

3.2 GROUNDING

All grounding practices shall comply with NFPA 70. The antenna mast shall be separately grounded. The system shall utilize a multiple-point signal grounding scheme where conductive path connections are required between each piece of equipment and the reference ground point. An isolated ground bar for power shall be provided for the connection of the main system components. The ground bar shall be connected to the main service ground utilizing a No. 6 conductor.

3.3 ACCEPTANCE TESTS

After installation has been completed, the Contractor shall conduct acceptance tests, utilizing the Contracting Officer approved test procedures, to demonstrate that equipment operates in accordance with specification requirements. The Contractor shall notify the Contracting Officer 10 days prior to the performance of tests. In no case shall notice be given until after the Contractor has received written Contracting Officer approval of the test plans as specified. The acceptance tests shall include originating and receiving messages at specified stations, at proper volume levels, without cross talk or noise from other links or nondesignated units.

3.4 TRAINING

The Contractor shall conduct a training course for 6 members of the operating and maintenance staff as designated by the Contracting Officer. The training course will be given at the installation during normal working hours for a total of 3-1 hour classes and shall start after the system is functionally complete but prior to final acceptance tests. The field instructions shall cover all of the items contained in the approved operating and maintenance manuals, as well as demonstrations of routine maintenance operations. The Contracting Officer shall be notified at least 30 days prior to the start of the training course.

Video Training Tape: Furnish a quality product training video, with either voice over narrated or on camera presented voice (scripting optional), on a 3/4 inch u-matic video cassette of each training course, to be used for refresher training or to train new personnel. This video shall show the system as installed. It may be prepared independently of the on-site training or at the same time. The u-matic cassette will be used as a master to prepare 1/2 inch VHS video cassettes for local use.

End Of Section

REPORT OF FINDINGS
Building 569
Hill AFB, Utah

1. An inspection of Building 569 was conducted 14-16 October, 1997, by Lankford Satterfield, Industrial Hygienist, Sacramento District Corps of Engineers. The building is scheduled for demolition.

2. Building material samples were obtained for analysis for asbestos. No asbestos was detected in any of the samples. The following materials were tested:

a. Joint/leveling compound from underneath the building.
b. Joint/leveling compound from an inner wall of the crawlspace.
c. Ceiling tile from the Women's restroom.
d. Insulation from above the suspended ceiling, Women's restroom.
e. Basecove mastic, Waiting Room area.
f. Carpet adhesive on the wood base.
g. Leveling compound and carpet adhesive.
h. Vinyl covering on sheetrock walls.
i. Sheet flooring.
j. Carpet adhesive on the wood base.

3. Paint samples were obtained for lead analysis. Lead levels indicate that no hazard exists in the paint on Building 569. Samples obtained were:

a. Dark brown paint from the bottom 3' of the exterior - 0.006 wt%
b. Paint from metal doorframe - <0.053 wt% (MRL)

4. Building occupants indicated that no mercury-containing instruments had ever been used in the facility. All sink drains were tested using a Jerome Model 431-X Mercury Vapor Analyzer with negative results.

5. From sample results obtained, it appears that there are no asbestos, lead-based paint or mercury hazards at Building 569.

MARILYN T. BREWER
Industrial Hygienist
Environmental Engineering Section A